UNITED STATES PATENT AND TRADEMARK OFFICE

UNITED STATES DEPARTMENT OF COMMERCE
United States Patent and Trademark Office
Address: COMMISSIONER FOR PATENTS
P.O. Box 1450
Alexandria, Virginia 22313-1450
www.uspto.gov

| APPLICATION NO. | FILING DATE | FIRST NAMED INVENTOR | ATTORNEY DOCKET NO. | CONFIRMATION NO. |
|---|---|---|---|---|
| 10/405,510 | 04/02/2003 | Leroy E. D'Astolfo JR. | 01-3826 | 8623 |

8840 7590 10/19/2010
INTELLECTUAL PROPERTY
ALCOA TECHNICAL CENTER, BUILDING C
100 TECHNICAL DRIVE
ALCOA CENTER, PA 15069-0001

| EXAMINER |
|---|
| BELL, BRUCE F |

| ART UNIT | PAPER NUMBER |
|---|---|
| 1746 | |

| MAIL DATE | DELIVERY MODE |
|---|---|
| 10/19/2010 | PAPER |

**Please find below and/or attached an Office communication concerning this application or proceeding.**

The time period for reply, if any, is set in the attached communication.

UNITED STATES PATENT AND TRADEMARK OFFICE

COMMISSIONER FOR PATENTS
UNITED STATES PATENT AND TRADEMARK OFFICE
P.O. BOX 1450
ALEXANDRIA, VA 22313-1450
www.uspto.gov

OCT 19 2010

*In re* Patent No. D'ASTOLFO, LEROY E.
Issue Date: October 19, 2004
Appl No.: 10/405,510
Filed: April 02, 2003
For: MECHANICAL ATTACHMENT OF ELECTRICAL CURRENT CONDUCTOR TO INERT ANODES

**DECISION GRANTING PETITION**
*37 CFR 1.324*

This is a decision on the petition filed May 8, 2007 to correct inventorship under 37 CFR 1.324.

The petition is granted.

The patented file is being forwarded to Certificate of Corrections Branch for issuance of a certificate naming only the actual inventor or inventors.

Alexa D. Neckel
Supervisory Patent Examiner
Art Unit 1723
Technology Center 1700

INTELLECTUAL PROPERTY
ALCOA TECHNICAL CENTER, BUILDING C
100 TECHNICAL DRIVE
ALCOA CENTER, PA 15069-0001

UNITED STATES PATENT AND TRADEMARK OFFICE

COMMISSIONER FOR PATENTS
UNITED STATES PATENT AND TRADEMARK OFFICE
P.O. BOX 1450
ALEXANDRIA, VA 22313-1450
www.uspto.gov

**DATE:** October 19, 2010
**TO:** Certificates of Correction Branch
**FROM:** Alexa D. Neckel
SPE, Art Unit 1723
**SUBJECT:** REQUEST FOR CERTIFICATE OF CORRECTION

Please issue a Certificate of Correction in U. S. Letters Patent No. 6,805,777 as specified on the attached Certificate.

Alexa D. Neckel, SPE
Art Unit 1723

# UNITED STATES PATENT AND TRADEMARK OFFICE

## CERTIFICATE

Patent No. 6,805,777
Patented: October 19, 2004

On petition requesting issuance of a certificate for correction of inventorship pursuant to 35 U.S.C. 256, it has been found that the above identified patent, through error and without deceptive intent, improperly sets forth the inventorship. Accordingly, it is hereby certified that the correct inventorship of this patent is:

LeRoy E. D'Astolfo, Jr.
James T. Burg

Alexa D. Neckel
Supervisory Patent Examiner
Art Unit 1723

UNITED STATES PATENT AND TRADEMARK OFFICE

COMMISSIONER FOR PATENTS
UNITED STATES PATENT AND TRADEMARK OFFICE
P.O. BOX 1450
ALEXANDRIA, VA 22313-1450
www.uspto.gov

| | |
|---|---|
| *In re* Patent No. D'ASTOLFO, LEROY E.<br>Issue Date: October 19, 2004<br>Appl No.: 10/405,510<br>Filed: April 02, 2003<br>For: MECHANICAL ATTACHMENT OF ELECTRICAL CURRENT CONDUCTOR TO INERT ANODES | **DECISION GRANTING PETITION**<br>*37 CFR 1.324* |

This is a decision on the petition filed May 8, 2007 to correct inventorship under 37 CFR 1.324.

The petition is granted.

The patented file is being forwarded to Certificate of Corrections Branch for issuance of a certificate naming only the actual inventor or inventors.

Alexa D. Neckel
Supervisory Patent Examiner
Art Unit 1723
Technology Center 1700

INTELLECTUAL PROPERTY
ALCOA TECHNICAL CENTER, BUILDING C
100 TECHNICAL DRIVE
ALCOA CENTER, PA 15069-0001

UNITED STATES PATENT AND TRADEMARK OFFICE

COMMISSIONER FOR PATENTS
UNITED STATES PATENT AND TRADEMARK OFFICE
P.O. BOX 1450
ALEXANDRIA, VA 22313-1450
www.uspto.gov

**DATE:** October 27, 2010
**TO:** Certificates of Correction Branch
**FROM:** Alexa D. Neckel
SPE, Art Unit 1723
**SUBJECT:** REQUEST FOR CERTIFICATE OF CORRECTION

Please issue a Certificate of Correction in U. S. Letters Patent No. 6,805,777 as specified on the attached Certificate.

Alexa D. Neckel, SPE
Art Unit 1723

# UNITED STATES PATENT AND TRADEMARK OFFICE

## CERTIFICATE

Patent No. 6,805,777
Patented: October 19, 2004

On petition requesting issuance of a certificate for correction of inventorship pursuant to 35 U.S.C. 256, it has been found that the above identified patent, through error and without deceptive intent, improperly sets forth the inventorship. Accordingly, it is hereby certified that the correct inventorship of this patent is:

LeRoy E. D'Astolfo, Jr.
James T. Burg

Alexa D. Neckel
Supervisory Patent Examiner
Art Unit 1723

UNITED STATES PATENT AND TRADEMARK OFFICE

Commissioner for Patents
United States Patent and Trademark Office
P.O. Box 1450
Alexandria, VA 22313-1450
www.uspto.gov

MAILED

OCT 28 2010

OFFICE OF PETITIONS

**BATES & BATES, LLC**
**1270 CAROLINE STREET**
**SUITE D-120-393**
**ATLANTA GA 30307**

| | | |
|---|---|---|
| In re Patent No. 6,853,553 | : | |
| Issue Date: April 1, 2003 | : | |
| Application No. 10/405,983 | : | ON PETITION |
| Filed: April 1, 2003 | : | |
| Attorney Docket No. GIB-0029 | : | |

This is a decision on the petition filed September 23, 2010, which will be treated as a petition under 37 CFR 1.378(c), to accept the unintentionally delayed payment of a maintenance fee for the above-identified patent.

The petition is **GRANTED**.

This patent expired on February 9, 2009, for failure to pay the three and one-half year maintenance fee. Since this petition was submitted within twenty-four months after the six-month grace period provided in 37 CFR 1.362(e), the petition was timely filed under the provisions of 37 CFR 1.378(c).

The maintenance fee is hereby accepted and the above-identified patent is reinstated as of the mail date of this decision.

It is not apparent whether the person signing the statement of unintentional delay was in a position to have firsthand or direct knowledge of the facts and circumstances of the delay at issue. Nevertheless, such statement is being treated as having been made as the result of a reasonable inquiry into the facts and circumstances of such delay. In the event that such an inquiry has not been made, petitioner must make such an inquiry. If such inquiry results in the discovery that the delay in paying the maintenance fee under 37 CFR 1.378(c) was intentional, petitioner must notify the Office.

Telephone inquiries concerning this decision should be directed to Kimberly Inabinet at (571) 272-4618.

The patent file is being forwarded to Files Repository.

/Kimberly Inabinet/

Kimberly Inabinet
Petitions Examiner
Office of Petitions

## SPE RESPONSE FOR CERTIFICATE OF CORRECTION

Paper No.: _____

DATE : July 24, 2009

TO SPE OF : ART UNIT 3763

SUBJECT : Request for Certificate of Correction for Appl. No.: 10/406397/7214206

Please respond to this request for a certificate of correction within 7 days.

**FOR IFW FILES:**

Please review the requested changes/corrections as shown in the **COCIN** document(s) in the IFW application image. No new matter should be introduced, nor should the scope or meaning of the claims be changed.

Please complete the response (see below) and forward the completed response to scanning using document code **COCX**.

**FOR PAPER FILES:**

Please review the requested changes/corrections as shown in the attached certificate of correction. Please complete this form (see below) and forward it with the file to:

**Certificates of Correction Branch (CofC)**
**South Tower - 9A22**
**Palm Location 7580**

Magdalene Talley
Certificates of Correction Branch
703-308-9390 ext. 120

**Thank You For Your Assistance**

**The request for issuing the above-identified correction(s) is hereby:**
Note your decision on the appropriate box.

- [x] **Approved** — **All** changes apply.
- [ ] **Approved in Part** — Specify below which changes **do not** apply.
- [ ] **Denied** — State the reasons for denial below.

**Comments:** _____

SPE

3763
Art Unit

PTO/SB/66 (03-09)
Approved for use through 03/31/2012. OMB 0651-0016
U.S. Patent and Trademark Office: U.S. DEPARTMENT OF COMMERCE
Under the Paperwork Reduction Act of 1995, no persons are required to respond to a collection of information unless it displays valid OMB control number.

# PETITION TO ACCEPT UNINTENTIONALLY DELAYED PAYMENT OF MAINTENANCE FEE IN AN EXPIRED PATENT (37 CFR 1.378(c))

| Patent Number | Issue Date (YYYY-MM-DD) | Application Number | Filing Date (YYYY-MM-DD) | Docket Number (if applicable) |
|---|---|---|---|---|
| 6,796,274 | 2004-09-28 | 10/406,508 | 2003-04-03 | 8801.001 |

CAUTION: Maintenance fee (and surcharge, if any) payment must correctly identify: (1) the patent number and (2) the application number of the actual U.S. application leading to issuance of that patent to ensure the fee(s) is/are associated with the correct patent. 37 CFR 1.366(c) and (d).

SMALL ENTITY
☒ Patentee claims, or has previously claimed, small entity status. See 37 CFR 1.27.

LOSS OF ENTITLEMENT TO SMALL ENTITY STATUS
☐ Patentee is no longer entitled to small entity status. See 37 CFR 1.27(g)

| NOT Small Entity | | Small Entity | |
|---|---|---|---|
| Fee | Code | Fee | Code |
| ○ 3 ½ year | (1551) | ◉ 3 ½ year | (2551) |
| ○ 7 ½ year | (1552) | ○ 7 ½ year | (2552) |
| ○ 11 ½ year | (1553) | ○ 11 ½ year | (2553) |

SURCHARGE
The surcharge required by 37 CFR 1.20(i)(2) (Fee Code 1558) must be paid as a condition of accepting unintentionally delayed payment of the maintenance fee.

MAINTENANCE FEE (37 CFR 1.20(e)-(g))
The appropriate maintenance fee must be submitted with this petition.

STATEMENT
THE UNDERSIGNED CERTIFIES THAT THE DELAY IN PAYMENT OF THE MAINTENANCE FEE TO THIS PATENT WAS UNINTENTIONAL

PETITIONER(S) REQUEST THAT THE DELAYED PAYMENT OF THE MAINTENANCE FEE BE ACCEPTED AND THE PATENT REINSTATED

THIS PORTION MUST BE COMPLETED BY THE SIGNATORY OR SIGNATORIES

37 CFR 1.378(d) states: "Any petition under this section must be signed by an attorney or agent registered to practice before the Patent and Trademark Office, or by the patentee, the assignee, or other party in interest."

I certify, in accordance with 37 CFR 1.4(d)(4) that I am

○ An attorney or agent registered to practice before the Patent and Trademark Office

◉ A sole patentee

○ A joint patentee; I certify that I am authorized to sign this submission on behalf of all the other patentees.

○ A joint patentee; all of whom are signing this e-petition

○ The assignee of record of the entire interest

Under the Paperwork Reduction Act of 1995, no persons are required to respond to a collection of information unless it displays valid OMB control number.

| Sole Patentee | | | |
|---|---|---|---|
| A signature of the applicant or representative is required in accordance with 37 CFR 1.33 and 10.18. Please see 37 CFR 1.4(d) for the form of the signature. | | | |
| Signature | /John L. Moynihan III/ | Date (YYYY-MM-DD) | 2010-07-27 |
| Name | John L. Moynihan III | | |

This collection of information is required by 37 CFR 1.378(c). The information is required to obtain or retain a benefit by the public which is to file (and by the USPTO to process) an application. Confidentiality is governed by 35 U.S.C. 122 and 37 CFR 1.11 and 1.14. This collection is estimated to take 1 hour to complete, including gathering, preparing, and submitting the completed application form to the USPTO. Time will vary depending upon the individual case. Any comments on the amount of time you require to complete this form and/ or suggestions for reducing this burden, should be sent to the Chief Information Officer, U.S. Patent and Trademark Office, U.S. Department of Commerce, P.O. Box 1450, Alexandria, VA 22313-1450. DO NOT SEND FEES OR COMPLETED FORMS TO THIS ADDRESS. **This form can only be used when in conjunction with EFS-Web. If this form is mailed to the USPTO, it may cause delays in reinstating the patent.**

# Privacy Act Statement

The Privacy Act of 1974 (P.L. 93-579) requires that you be given certain information in connection with your submission of the attached form related to a patent application or patent. Accordingly, pursuant to the requirements of the Act, please be advised that: (1) the general authority for the collection of this information is 35 U.S.C. 2(b)(2); (2) furnishing of the information solicited is voluntary; and (3) the principal purpose for which the information is used by the U.S. Patent and Trademark Office is to process and/or examine your submission related to a patent application or patent. If you do not furnish the requested information, the U.S. Patent and Trademark Office may not be able to process and/or examine your submission, which may result in termination of proceedings or abandonment of the application or expiration of the patent.

The information provided by you in this form will be subject to the following routine uses:

1. The information on this form will be treated confidentially to the extent allowed under the Freedom of Information Act (5 U.S.C. 552) and the Privacy Act (5 U.S.C. 552a). Records from this system of records may be disclosed to the Department of Justice to determine whether the Freedom of Information Act requires disclosure of these records.

2. A record from this system of records may be disclosed, as a routine use, in the course of presenting evidence to a court, magistrate, or administrative tribunal, including disclosures to opposing counsel in the course of settlement negotiations.

3. A record in this system of records may be disclosed, as a routine use, to a Member of Congress submitting a request involving an individual, to whom the record pertains, when the individual has requested assistance from the Member with respect to the subject matter of the record.

4. A record in this system of records may be disclosed, as a routine use, to a contractor of the Agency having need for the information in order to perform a contract. Recipients of information shall be required to comply with the requirements of the Privacy Act of 1974, as amended, pursuant to 5 U.S.C. 552a(m).

5. A record related to an International Application filed under the Patent Cooperation Treaty in this system of records may be disclosed, as a routine use, to the International Bureau of the World Intellectual Property Organization, pursuant to the Patent Cooperation Treaty.

6. A record in this system of records may be disclosed, as a routine use, to another federal agency for purposes of National Security review (35 U.S.C. 181) and for review pursuant to the Atomic Energy Act (42 U.S.C. 218(c)).

7. A record from this system of records may be disclosed, as a routine use, to the Administrator, General Services, or his/her designee, during an inspection of records conducted by GSA as part of that agency's responsibility to recommend improvements in records management practices and programs, under authority of 44 U.S.C. 2904 and 2906. Such disclosure shall be made in accordance with the GSA regulations governing inspection of records for this purpose, and any other relevant (i.e., GSA or Commerce) directive. Such disclosure shall not be used to make determinations about individuals.

8. A record from this system of records may be disclosed, as a routine use, to the public after either publication of the application pursuant to 35 U.S.C. 122(b) or issuance of a patent pursuant to 35 U.S.C. 151. Further, a record may be disclosed, subject to the limitations of 37 CFR 1.14, as a routine use, to the public if the record was filed in an application which became abandoned or in which the proceedings were terminated and which application is referenced by either a published application, an application open to public inspections or an issued patent.

9. A record from this system of records may be disclosed, as a routine use, to a Federal, State, or local law enforcement agency, if the USPTO becomes aware of a violation or potential violation of law or regulation.

UNITED STATES PATENT AND TRADEMARK OFFICE

Commissioner for Patents
United States Patent and Trademark Office
P.O. Box 1450
Alexandria, VA 22313-1450
www.uspto.gov

In re Patent No. 6796274
Issue Date: September 28,2004
Application No. 10406508
Filed: April 3,2003
Attorney Docket No. M30326

:
:DECISION GRANTING PETITION
:UNDER 37 CFR 1.378(c)
:

This is a decision on the electronic petition, filed August 3,2010 ,under 37 CFR 1.378(c) to accept the unintentionally delayed payment of the 3.5 year maintenance fee for the above-identified patent.

The petition is **GRANTED**.

The maintenance fee is accepted, and the above-identified patent reinstated as of August 3,2010 .
This decision also constitutes notice that the fee has been accepted. An electronic copy of the petition and this decision has been created as an entry in the Image File Wrapper. Nevertheless, petitioner should print and retain an independent copy.

Telephone inquiries related to this electronic decision should be directed to the Electronic Business Center at 1-866-217-9197.

## SPE RESPONSE FOR CERTIFICATE OF CORRECTION

**Paper No.:** _____

**DATE** : September 5.2006

**TO SPE OF** : ART UNIT 3661

**SUBJECT** : Request for Certificate of Correction for **Appl. No.:** 10/406644 **Patent No.:** 7,039,501 B2

Please respond to this request for a certificate of correction within 7 days.

Please review the requested **changes/corrections** as shown in the **COCIN** document(s) in the IFW application image. No new matter should be introduced, nor should the scope or meaning of the claims be changed.

Please complete the response (see below) and forward the completed response to scanning using document code **COCX.**

*Elisha Evans*

**Certificates of Correction Branch**

**703-308-9390 ext.** *110*

**Thank You For Your Assistance**

**The request for issuing the above-identified correction(s) is hereby:**

Note your decision on the **appropriate box.**

| | |
|---|---|
| ☑ Approved | All changes apply. |
| ☐ **Approved in Part** | Specify below which changes **do not** apply. |
| ☐ **Denied** | State the reasons for denial below. |

**Comments:** _____

/Thomas G. Black/ — **SPE**

3661 — **Art Unit**

UNITED STATES PATENT AND TRADEMARK OFFICE

Commissioner for Patents
United States Patent and Trademark Office
P.O. Box 1450
Alexandria, VA 22313-1450
www.uspto.gov

TUNG & ASSOCIATES
838 W. LONG LAKE ROAD
SUITE 120
BLOOMFIELD HILLS, MI 48302

MAILED
FEB 01 2012
OFFICE OF PETITIONS

| | | |
|---|---|---|
| In re Patent No. 6,964,419 | : | |
| Issue Date: November 15, 2005 | : | |
| Application No. 10/406,711 | : | ON PETITION |
| Filed: April 2, 2003 | : | |
| Attorney Docket No. 67,200-1054 | : | |

This is a decision on the petition under 37 CFR 1.378(c), filed December 14, 2011, to accept the delayed payment of a maintenance fee for the above-identified patent.

There is no indication that the person signing the instant petition was ever given a power of attorney or authorization of agent to prosecute the above-identified application. In accordance with 37 CFR 1.34(a), the signature appearing on the petition shall constitute a representation to the United States Patent and Trademark Office that he/she is authorized to represent the particular party in whose behalf he/she acts. However, if petitioner desires to receive future correspondence regarding this application, the appropriate power of attorney or authorization of agent must be submitted. A courtesy copy of this decision is being mailed to petitioner. Nevertheless, all future correspondence regarding this application file will be directed solely to the address of record until otherwise instructed.

It is not apparent whether the statement of unintentional delay was signed by a person who would have been in a position of knowing that the entire delay in filing the required reply from the due date for the reply until the filing of a grantable petition pursuant to 37 CFR 1.378(c) was unintentional. Nevertheless, in accordance with 37 CFR 10.18, the statement is accepted as constituting a certification of unintentional delay. However, in the event that petitioner has no knowledge that the delay was unintentional, petitioner must make such an inquiry to ascertain that, in fact, the delay was unintentional. If petitioner discovers that the delay was intentional, petitioner must so notify the Office.

The petition is **DISMISSED** as time barred.

This patent expired on November 15, 2009 for failure to pay the 3-½ year maintenance fee. Since this petition was not submitted within the twenty-four months after the six-month grace

period provided in 37 CFR 1.362 (e), the petition was not timely filed under the provisions of 37 CFR 1.378(c).

A petition to accept the unintentionally delayed payment of a maintenance fee under 35 U.S.C. 41(c) and 37 CFR 1.378(c) must be accompanied by: (1) a statement that the delay was unintentional; (2) payment of the appropriate maintenance fee, unless previously submitted; (3) payment of the surcharge set forth in 37 CFR 1.20(i)(2). This petition lacks item (1) above.

35 USC 41(c)(1) states that:

"The Director may accept the payment of any maintenance fee required by subsection (b) of this section which is made within twenty-four months after the six-month grace period if the delay is shown to the satisfaction of the Commissioner to have been unintentional, or at any time after the six-month grace period if the delay is shown to the satisfaction of the Commissioner to have been unavoidable. Thus, 35 U.S.C. § 41(c)(1) does not authorize the Commissioner to accept a delayed maintenance fee payment later than twenty-four (24) months after the expiration of the six-month grace period specified in 35 U.S.C. § 41(b) unless the delay is shown to have been unavoidable. Since the instant petition was not filed within twenty-four (24) months after the expiration of the six-month grace period specified in 35 U.S.C. § 41(b), the Commissioner cannot accept a delayed maintenance fee payment for the above-identified patent under 37 CFR 1.378(c)."

If reconsideration of this decision is desired, a petition for reconsideration under 37 CFR 1.378(e) must be filed within **TWO (2) MONTHS** from the mail date of this decision. No extension of this two-month time limit can be granted under 37 CFR 1.136(a) or (b). This is **not** a final agency action within the meaning of 5 U.S.C. § 704.

Any petition for reconsideration of this decision must be accompanied by **the petition fee of $400** as set forth in 37 CFR 1.17(f). The petition for reconsideration must include the lacking item(s) noted below, since, after a decision on the petition for reconsideration, no further reconsideration or review of the matter will be undertaken by the Director.

Should petitioner wish to pursue reinstatement of the above-identified patent on the basis of unavoidable delay, petitioner should file a petition under 35 U.S.C. § 41(c) and 37 CFR 1.378(b), which must be accompanied by (1) an adequate showing that the delay was unavoidable, since reasonable care was taken to ensure that the maintenance fee would be paid timely, (2) payment of the appropriate maintenance fee, and (3) payment of the surcharge set forth in 37 CFR 1.20(i)(1).

The $2770 submitted with petition on December 14, 2011 will be refunded to the petitioner in due course.

Further correspondence with respect to this matter should be addressed as follows:

By Mail: Mail Stop PETITION
Commissioner for Patents
Post Office Box 1450
Alexandria, VA 22313-1450

By hand: U. S. Patent and Trademark Office
Customer Service Window, Mail Stop Petitions
Randolph Building
401 Dulany Street
Alexandria, VA 22314

The centralized facsimile number is **(571) 273-8300**.

Telephone inquiries regarding this decision should be directed to undersigned at (571) 272-1642.

April M. Wise
Petitions Examiner
Office of Petitions

Attachment: Petition to Accept Unavoidably Delayed Payment of Maintenance Fee in An Expired Patent (37 CFR 1.378(b))

UNITED STATES PATENT AND TRADEMARK OFFICE

Commissioner for Patents
United States Patent and Trademark Office
P.O. Box 1450
Alexandria, VA 22313-1450
www.uspto.gov

MAILED

FEB 07 2011

OFFICE OF PETITIONS

**CHEVRON CORPORATION**
**P.O. BOX 6006**
**SAN RAMON CA 94583-0806**

| | | |
|---|---|---|
| In re Application of | : | |
| ANGLE, et al | : | |
| Application No. 10/406,867 | : | DECISION ON PETITION |
| Filed: April 4, 2003 | : | |
| Docket No. Z-0008. | : | |

This is a decision on the petition under the unintentional provisions of 37 CFR 1.137(b), filed March 21, 2008, to revive the above-identified application.

The petition is **GRANTED**.

The application became abandoned for failure to reply in a timely manner to the non-final Office action mailed October 2, 2006, which set a shortened statutory period for reply of three (3) months. A three (3) month extension of time under the provisions of 37 CFR 1.136(a) was obtained. Accordingly, the application became abandoned on April 3, 2007.

The petition satisfies the requirements of 37 CFR 1.137(b) in that petitioner has supplied (1) the reply in the form of an amendment, (2) the petition fee of $1500; and (3) and the required statement of unintentional delay.

The application file does not indicate a change of address has been filed in this case, although the address given on the petition differs from the address of record. A change of address should be filed in this case in accordance with MPEP 601.03. A courtesy copy of this decision is being mailed to the address noted on the petition. However, until otherwise instructed, all future correspondence regarding this application will be mailed solely to the address of record.

Telephone inquiries concerning this decision should be directed to the undersigned at (571) 272-6735.

This application is being referred to Technology Center AU 3629 for appropriate action by the Examiner in the normal course of business.

/Diane C. Goodwyn/
Diane C. Goodwyn
Petitions Examiner
Office of Petitions

cc: TIMOTHY J. HADLOCK
CHEVRON CORPORATION, LAW DEPARTMENT
6001 BOLLINGER CANYON ROAD,
SAN RAMON, CA 94583-2324

UNITED STATES PATENT AND TRADEMARK OFFICE

Commissioner for Patents
United States Patent and Trademark Office
P.O. Box 1450
Alexandria, VA 22313-1450
www.uspto.gov

O2MICRO INC
C/O MURABITO, HAO & BARNES LLP
TWO NORTH MARKET STREET
THIRD FLOOR
SAN JOSE CA 95113

MAILED
OCT 25 2010
OFFICE OF PETITIONS

In re Application of :
Sterling Du, et al. :
Application No.: 10/406,949 : ON PETITION
Filed: April 3, 2003 :
Attorney Docket No.: O2-00.17.CIP.4 :

This is a decision on the petition, filed October 19, 2010, under 37 CFR 1.313(c)(2) to withdraw the above-identified application from issue after payment of the issue fee.

The petition is **GRANTED**.

The above-identified application is withdrawn from issue for consideration of a submission under 37 CFR 1.114 (request for continued examination). See 37 CFR 1.313(c)(2).

***Petitioner is advised that the issue fee paid on September 14, 2010, cannot be refunded. If, however, this application is again allowed, petitioner may request that it be applied towards the issue fee required by the new Notice of Allowance.***[1]

Telephone inquiries relating to this decision should be directed to the undersigned at (571) 272-3204.

The application is being referred to Technology Center AU 2115 for further processing of the request for continued examination under 37 CFR 1.114 and for consideration of the concurrently filed Information Disclosure Statement (IDS).

/SDB/

Sherry D. Brinkley
Petitions Examiner
Office of Petitions

[1] *The request to apply the issue fee to the new Notice may be satisfied by completing and returning the new Part B – Fee(s) Transmittal Form (along with any balance due at the time of submission). Petitioner is advised that the Issue Fee Transmittal Form must be completed and timely submitted to avoid abandonment of the application.*

UNITED STATES PATENT AND TRADEMARK OFFICE

Commissioner for Patents
United States Patent and Trademark Office
P.O. Box 1450
Alexandria, VA 22313-1450
www.uspto.gov

In re Patent No. 7173622
Issue Date: February 6,2007
Application No. 10407111
Filed: April 4,2003
Attorney Docket No. 24739.002

:
:DECISION GRANTING PETITION
:UNDER 37 CFR 1.378(c)
:

This is a decision on the electronic petition, filed April 26,2011 ,under 37 CFR 1.378(c) to accept the unintentionally delayed payment of the 3.5 year maintenance fee for the above-identified patent.

The petition is **GRANTED**.

The maintenance fee is accepted, and the above-identified patent reinstated as of April 26,2011 . This decision also constitutes notice that the fee has been accepted. An electronic copy of the petition and this decision has been created as an entry in the Image File Wrapper. Nevertheless, petitioner should print and retain an independent copy.

Telephone inquiries related to this electronic decision should be directed to the Electronic Business Center at 1-866-217-9197.

PTO/SB/66 (03-09)
Approved for use through 03/31/2012. OMB 0651-0016
U.S. Patent and Trademark Office: U.S. DEPARTMENT OF COMMERCE
Under the Paperwork Reduction Act of 1995, no persons are required to respond to a collection of information unless it displays valid OMB control number.

# PETITION TO ACCEPT UNINTENTIONALLY DELAYED PAYMENT OF MAINTENANCE FEE IN AN EXPIRED PATENT (37 CFR 1.378(c))

| Patent Number | Issue Date (YYYY-MM-DD) | Application Number | Filing Date (YYYY-MM-DD) | Docket Number (if applicable) |
|---|---|---|---|---|
| 7173622 | 2007-02-06 | 10407111 | 2003-04-04 | |

CAUTION: Maintenance fee (and surcharge, if any) payment must correctly identify: (1) the patent number and (2) the application number of the actual U.S. application leading to issuance of that patent to ensure the fee(s) is/are associated with the correct patent. 37 CFR 1.366(c) and (d).

SMALL ENTITY
☒ Patentee claims, or has previously claimed, small entity status. See 37 CFR 1.27.

LOSS OF ENTITLEMENT TO SMALL ENTITY STATUS
☐ Patentee is no longer entitled to small entity status. See 37 CFR 1.27(g)

| NOT Small Entity | | Small Entity | |
|---|---|---|---|
| Fee | Code | Fee | Code |
| ○ 3 ½ year | (1551) | ◉ 3 ½ year | (2551) |
| ○ 7 ½ year | (1552) | ○ 7 ½ year | (2552) |
| ○ 11 ½ year | (1553) | ○ 11 ½ year | (2553) |

SURCHARGE
The surcharge required by 37 CFR 1.20(i)(2) (Fee Code 1558) must be paid as a condition of accepting unintentionally delayed payment of the maintenance fee.

MAINTENANCE FEE (37 CFR 1.20(e)-(g))
The appropriate maintenance fee must be submitted with this petition.

STATEMENT
THE UNDERSIGNED CERTIFIES THAT THE DELAY IN PAYMENT OF THE MAINTENANCE FEE TO THIS PATENT WAS UNINTENTIONAL

PETITIONER(S) REQUEST THAT THE DELAYED PAYMENT OF THE MAINTENANCE FEE BE ACCEPTED AND THE PATENT REINSTATED

THIS PORTION MUST BE COMPLETED BY THE SIGNATORY OR SIGNATORIES

37 CFR 1.378(d) states: "Any petition under this section must be signed by an attorney or agent registered to practice before the Patent and Trademark Office, or by the patentee, the assignee, or other party in interest."

I certify, in accordance with 37 CFR 1.4(d)(4) that I am

◉ An attorney or agent registered to practice before the Patent and Trademark Office

○ A sole patentee

○ A joint patentee; I certify that I am authorized to sign this submission on behalf of all the other patentees.

○ A joint patentee; all of whom are signing this e-petition

○ The assignee of record of the entire interest

Under the Paperwork Reduction Act of 1995, no persons are required to respond to a collection of information unless it displays valid OMB control number.

| Patent Practitioner | | | |
|---|---|---|---|
| A signature of the applicant or representative is required in accordance with 37 CFR 1.33 and 10.18. Please see 37 CFR 1.4(d) for the form of the signature | | | |
| Signature | /joseph r. cruse, jr./ | Date (YYYY-MM-DD) | 2011-04-26 |
| Name | Joseph R. Cruse, Jr. | Registration Number | 51591 |

This collection of information is required by 37 CFR 1.378(c). The information is required to obtain or retain a benefit by the public which is to file (and by the USPTO to process) an application. Confidentiality is governed by 35 U.S.C. 122 and 37 CFR 1.11 and 1.14. This collection is estimated to take 1 hour to complete, including gathering, preparing, and submitting the completed application form to the USPTO. Time will vary depending upon the individual case. Any comments on the amount of time you require to complete this form and/ or suggestions for reducing this burden, should be sent to the Chief Information Officer, U.S. Patent and Trademark Office, U.S. Department of Commerce, P.O. Box 1450, Alexandria, VA 22313-1450. DO NOT SEND FEES OR COMPLETED FORMS TO THIS ADDRESS. **This form can only be used when in conjunction with EFS-Web. If this form is mailed to the USPTO, it may cause delays in reinstating the patent.**

# Privacy Act Statement

The Privacy Act of 1974 (P.L. 93-579) requires that you be given certain information in connection with your submission of the attached form related to a patent application or patent. Accordingly, pursuant to the requirements of the Act, please be advised that: (1) the general authority for the collection of this information is 35 U.S.C. 2(b)(2); (2) furnishing of the information solicited is voluntary; and (3) the principal purpose for which the information is used by the U.S. Patent and Trademark Office is to process and/or examine your submission related to a patent application or patent. If you do not furnish the requested information, the U.S. Patent and Trademark Office may not be able to process and/or examine your submission, which may result in termination of proceedings or abandonment of the application or expiration of the patent.

The information provided by you in this form will be subject to the following routine uses:

1. The information on this form will be treated confidentially to the extent allowed under the Freedom of Information Act (5 U.S.C. 552) and the Privacy Act (5 U.S.C. 552a). Records from this system of records may be disclosed to the Department of Justice to determine whether the Freedom of Information Act requires disclosure of these records.

2. A record from this system of records may be disclosed, as a routine use, in the course of presenting evidence to a court, magistrate, or administrative tribunal, including disclosures to opposing counsel in the course of settlement negotiations.

3. A record in this system of records may be disclosed, as a routine use, to a Member of Congress submitting a request involving an individual, to whom the record pertains, when the individual has requested assistance from the Member with respect to the subject matter of the record.

4. A record in this system of records may be disclosed, as a routine use, to a contractor of the Agency having need for the information in order to perform a contract. Recipients of information shall be required to comply with the requirements of the Privacy Act of 1974, as amended, pursuant to 5 U.S.C. 552a(m).

5. A record related to an International Application filed under the Patent Cooperation Treaty in this system of records may be disclosed, as a routine use, to the International Bureau of the World Intellectual Property Organization, pursuant to the Patent Cooperation Treaty.

6. A record in this system of records may be disclosed, as a routine use, to another federal agency for purposes of National Security review (35 U.S.C. 181) and for review pursuant to the Atomic Energy Act (42 U.S.C. 218(c)).

7. A record from this system of records may be disclosed, as a routine use, to the Administrator, General Services, or his/her designee, during an inspection of records conducted by GSA as part of that agency's responsibility to recommend improvements in records management practices and programs, under authority of 44 U.S.C. 2904 and 2906. Such disclosure shall be made in accordance with the GSA regulations governing inspection of records for this purpose, and any other relevant (i.e., GSA or Commerce) directive. Such disclosure shall not be used to make determinations about individuals.

8. A record from this system of records may be disclosed, as a routine use, to the public after either publication of the application pursuant to 35 U.S.C. 122(b) or issuance of a patent pursuant to 35 U.S.C. 151. Further, a record may be disclosed, subject to the limitations of 37 CFR 1.14, as a routine use, to the public if the record was filed in an application which became abandoned or in which the proceedings were terminated and which application is referenced by either a published application, an application open to public inspections or an issued patent.

9. A record from this system of records may be disclosed, as a routine use, to a Federal, State, or local law enforcement agency, if the USPTO becomes aware of a violation or potential violation of law or regulation.

UNITED STATES PATENT AND TRADEMARK OFFICE

Commissioner for Patents
United States Patent and Trademark Office
P.O. Box 1450
Alexandria, VA 22313-1450
www.uspto.gov

CHEVRON U.S.A. INC.
LAW – INTELLECTUAL
PROPERTY GROUP
P.O. BOX 2100
HOUSTON TX 77252-2100

MAILED
MAY 09 2011
OFFICE OF PETITIONS

| | | |
|---|---|---|
| In re Application of | : | |
| Wheat, et al. | : | |
| Application No. 10/407,316 | : | DECISION |
| Filed/Deposited: 4 April, 2003 | : | |
| Attorney Docket No. X-0130 | : | |

This is a decision on the petition filed on 18 February, 2011, pursuant to 37 C.F.R. §1.137(b) for revival of an application abandoned due to unintentional delay.

The petition under 37 C.F.R. §1.137(b) is **GRANTED**.

As to the Allegations
of Unintentional Delay

The requirements of a grantable petition pursuant to 37 C.F.R. §1.137(b) are the petition and fee therefor, a reply, a proper statement and/or showing of unintentional delay under the regulation, and, where applicable, a terminal disclaimer and fee

*Petitioners' attentions always are directed to the guidance in the Commentary at MPEP §711.03(c)(II).*

## BACKGROUND

The record reflects as follows:

Petitioner failed to reply timely and properly, to the final Office action mailed on 7 January, 2010, with reply due following the filing of the 7 July, 2010, request and fee for extension of time and Notice of Appeal (with fee) absent extension of time on or before 7 September, 2010.

The application went abandoned by operation of law after midnight 7 September, 2010.

It does not appear that the Office mailed the Notice of Abandonment before a petition was filed.

On 18 February, 2011, Petitioner filed, *inter alia*, a petition pursuant to 37 C.F.R. §1.137(b), with fee, a reply in the form of an Appeal Brief, though without fee but with authorization to charge Deposit Account 03-1620 (and if said fees have not been charged they now are so charged), with a statement of unintentional delay—notably, Petitioner also in appropriately submitted a request and fee for extension of time, which, if it has not already been credited now is so credited. (Petitioner respectfully is reminded to review what are proper/appropriate and not proper/appropriate fees for filings when submitted.) Petitioner has been alerted to this matter.

The availability of applications and application papers online to applicants/practitioners who diligently associate their Customer Number with the respective application(s) now provides an applicant/practitioner on-demand information as to events/transactions in an application.

Out of an abundance of caution, Petitioners always are reminded that those registered to practice and all others who make representations before the Office **must** inquire into the underlying facts of representations made to the Office and support averments with the appropriate documentation–since all owe to the Office the continuing duty to disclose.[1]

## STATUTES, REGULATIONS AND ANALYSIS

Congress has authorized the Commissioner to "revive an application if the delay is shown to the satisfaction of the Commissioner to have been "unavoidable." 35 U.S.C. §133 (1994).[2]
The regulations at 37 C.F.R. §1.137(a) and (b) set forth the requirements for a Petitioner to revive a previously unavoidably or unintentionally, respectively, abandoned application under this congressional grant of authority.

Unintentional delays are those that do not satisfy the very strict statutory and regulatory requirements of unavoidable delay, and, by definition, are not intentional.[3]))

---

[1] See supplement of 17 June, 1999. The Patent and Trademark Office is relying on petitioner's duty of candor and good faith and accepting a statement made by Petitioner. See Changes to Patent Practice and Procedure, 62 Fed. Reg. at 53160 and 53178, 1203 Off. Gaz. Pat. Office at 88 and 103 (responses to comments 64 and 109)(applicant obligated under 37 C.F.R. §10.18 to inquire into the underlying facts and circumstances when providing statements to the Patent and Trademark Office).

[2] 35 U.S.C. §133 provides:

**35 U.S.C. §133 Time for prosecuting application.**
Upon failure of the applicant to prosecute the application within six months after any action therein, of which notice has been given or mailed to the applicant, or within such shorter time, not less than thirty days, as fixed by the Commissioner in such action, the application shall be regarded as abandoned by the parties thereto, unless it be shown to the satisfaction of the Commissioner that such delay was unavoidable.

[3] Therefore, by example, an unintentional delay in the reply might occur if the reply and transmittal form are to be prepared for shipment by the US Postal Service, but other pressing matters distract one's attention and the mail is not timely deposited for shipment.

Application No. 10/407,316

As to Allegations of
Unintentional Delay

The requirements of a grantable petition pursuant to 37 C.F.R. §1.137(b) are the petition and fee therefor, a reply, a proper statement of unintentional delay under the regulation, and, where applicable, a terminal disclaimer and fee.

It appears that the requirements under the rule have been satisfied.

CONCLUSION

Accordingly, the petition pursuant to 37 C.F.R. §1.137(b) is **granted**.

The instant application is released to the Technology Center/AU 1771 for further processing—i.e., to await the Examiner's Answer—in due course.

Petitioner may find it beneficial to view Private PAIR within a fortnight of the instant decision to ensure that the revival has been acknowledged by the TC/AU in response to this decision. It is noted that all inquiries with regard to status need be directed to the TC/AU where that change of status must be effected—that does not occur in the Office of Petitions.

Telephone inquiries regarding this decision may be directed to the undersigned at (571) 272-3214—it is noted, however, that all practice before the Office is in writing (see: 37 C.F.R. §1.2[4]) and the proper authority for action on any matter in this regard are the statutes (35 U.S.C.), regulations (37 C.F.R.) and the commentary on policy (MPEP). Therefore, no telephone discussion may be controlling or considered authority for Petitioner's action(s).

/John J. Gillon, Jr./
John J. Gillon, Jr.
Senior Attorney
Office of Petitions

[4] The regulations at 37 C.F.R. §1.2 provide:
**§1.2 Business to be transacted in writing.**
All business with the Patent and Trademark Office should be transacted in writing. The personal attdance of applicants or their attorneys or agents at the Patent and Trademark Office is unnecessary. The action of the Patent and Trademark Office will be based exclusively on the written record in the Office. No attention will be paid to any alleged oral promise, stipulation, or understanding in relation to which there is disagreement or doubt.

UNITED STATES PATENT AND TRADEMARK OFFICE

Commissioner for Patents
United States Patent and Trademark Office
P.O. Box 1450
Alexandria, VA 22313-1450
www.uspto.gov

**SEED INTELLECTUAL PROPERTY LAW GROUP PLLC**
**701 FIFTH AVE**
**SUITE 5400**
**SEATTLE WA 98104**

**MAILED**
JUL 08 2011
**OFFICE OF PETITIONS**

| | | |
|---|---|---|
| In re Patent No: 7,307,275 | : | |
| Issued: December 11, 2007 | : | |
| Application No. 10/407,683 | : | NOTICE |
| Filed: April 4, 2003 | : | |
| Attorney Docket No. 11090-050-999 | : | |

This is a notice regarding your request for acceptance of a fee deficiency submission under 37 CFR 1.28 filed June 13, 2011.

On September 1, 1998, the Court of Appeals for the Federal Circuit held that 37 CFR 1.28(c) is the sole provision governing the time for correction of the erroneous payment of the issue fee as a small entity. **See DH Technology v. Synergystex International, Inc. 154 F.3d 1333, 47 USPQ2d 1865 (Fed. Cir. Sept. 1, 1998).**

The Office no longer investigates or rejects original or reissue applications under 37 CFR 1.56. **1098 Off. Gaz. Pat. Office 502 (January 3, 1989)**. Therefore, nothing in this Notice is intended to imply that an investigation was done.

Your fee deficiency submission under 37 CFR 1.28 is hereby **DISMISSED**.

The request under 37 CFR 1.28 cannot be accepted at this time since it appears that the petition is not signed by a person having authority to act in the above-identified patent.

Petitioner's attention is directed to 37 CFR 1.33(b), which states.

Amendments and other papers, except for written assertions pursuant to § 1.27(c)(2)(ii) of this part, filed in the application must be signed by:

(1) A registered patent attorney or patent agent of record appointed in compliance with § 1.32(b);
(2) A registered patent attorney or patent agent not of record who acts in a representative capacity under the provisions of § 1.34;
(3) An assignee as provided for under §3.71(b) of this chapter; or

(4) All of the applicants (§ 1.41(b)) for patent, unless there is an assignee of the entire interest and such assignee has taken action in the application in accordance with § 3.71 of this chapter.

Further, that part of the petition that is directed to the deficiency payment is not signed by the proper party. Accordingly, the request cannot be accepted until it is signed by all inventors, an attorney or agent registered to practice before the U.S. Patent and Trademark Office or the assignee of the entire interest under 37 CFR 3.73(b).

Further correspondence with respect to this matter should be addressed as follows:

By Mail: Mail Stop PETITIONS
Commissioner for Patents
Post Office Box 1450
Alexandria, VA 22313-1450

By hand: U.S. Patent and Trademark Office
Customer Service Window, Mail Stop Petitions
Randolph Building
401 Dulany Street
Alexandria, VA 22314

The centralized facsimile number is (571) 273-8300.

Additionally, the address given on the petition differs from the address of record. A courtesy copy of this decision is being mailed to the address given on the petition; however, the Office will mail all future correspondence solely to the address of record.

Telephone inquiries concerning this decision should be directed to the undersigned at (571) 272-7751.

/Joan Olszewski/
Joan Olszewski
Petitions Examiner
Office of Petitions

cc: GILLIAN GASCOIGNE
DENNEMEYER & CO LTD
REGENT HOUSE HEATON LANE
STOCKPORT CHESHIRE
ENGLAND SK4 1BB

UNITED STATES PATENT AND TRADEMARK OFFICE

Commissioner for Patents
United States Patent and Trademark Office
P.O. Box 1450
Alexandria, VA 22313-1450
www.uspto.gov

**SEED INTELLECTUAL PROPERTY LAW GROUP PLLC**
**701 FIFTH AVE**
**SUITE 5400**
**SEATTLE WA 98104**

**MAILED**
NOV 10 2011
**OFFICE OF PETITIONS**

| | | |
|---|---|---|
| In re Patent No. 7,307,275 | : | |
| Issued: December 11, 2007 | : | |
| Application No. 10/407,683 | : | NOTICE |
| Filed: April 4, 2003 | : | |
| Attorney Docket No. 11090-050-999 | : | |

This is a notice regarding your renewed request for acceptance of a fee deficiency submission under 37 CFR 1.28 filed October 27, 2011.

On September 1, 1998, the Court of Appeals for the Federal Circuit held that 37 CFR 1.28(c) is the sole provision governing the time for correction of the erroneous payment of the issue fee as a small entity. **See DH Technology v. Synergystex International, Inc. 154 F.3d 1333, 47 USPQ2d 1865 (Fed. Cir. Sept. 1, 1998).**

The Office no longer investigates or rejects original or reissue applications under 37 CFR 1.56. **1098 Off. Gaz. Pat. Office 502 (January 3, 1989)**. Therefore, nothing in this Notice is intended to imply that an investigation was done.

Your fee deficiency submission under 37 CFR 1.28 is hereby **ACCEPTED**.

This patent is no longer entitled to small entity status. Accordingly, all future fees paid in this patent must be paid at the large entity rate.

Telephone inquiries concerning this decision should be directed to the undersigned at (571) 272-7751.

/Joan Olszewski/
Joan Olszewski
Petitions Examiner
Office of Petitions

UNITED STATES PATENT AND TRADEMARK OFFICE

Commissioner for Patents
United States Patent and Trademark Office
P.O. Box 1450
Alexandria, VA 22313-1450
www.uspto.gov

DECHERT LLP
P.O. BOX 390460
MOUNTAIN VIEW CA 94039-0460

MAILED

SEP 27 2010

OFFICE OF PETITIONS

| | | |
|---|---|---|
| In re Application of | : | ON APPLICATION FOR |
| Thrue et al. | : | PATENT TERM ADJUSTMENT |
| Patent Number: 7,737,264 | : | INCLUDING REQUEST |
| Issue Date: 06/15/2010 | : | FOR RECONSIDERATION |
| Application No. 10/407807 | : | OF PATENT TERM ADJUSTMENT |
| Filing or 371(c) Date: 04/04/2003 | : | and |
| Attorney Docket Number: | : | NOTICE OF INTENT TO ISSUE |
| 366929-014US (396510) | : | CERTIFICATE OF CORRECTION |

This is a decision on the "APPLICATION FOR PATENT TERM ADJUSTMENT INCLUDING REQUEST FOR RECONSIDERATION OF PATENT TERM ADJUSTMENT UNDER 37 CFR § 1.705(d)," filed August 12, 2010, requesting that the patent term adjustment indicated on the above-identified patent be corrected to indicate that the term of the above-identified patent is extended or adjusted by a minimum of three hundred five (305) days.

The petition to correct the patent term adjustment indicated on the above-identified patent to indicate that the term of the above-identified patent is extended or adjusted by three hundred five (305) days is **GRANTED to the extent indicated herein**.

Applicants provide that on December 19, 2005, Applicants filed a reply under 35 U.S.C. 111, including a response to a non-final Office action. On March 6, 2006, this Office mailed a final Office action. On September 11, 2009, the Office mailed a subsequent final Office action in response to Applicant's December 19, 2005 reply, withdrawing the previous final Office action. Applicants assert an entitlement to 145 days of patent term adjustment in connection with the mailing of the subsequent final Office action, asserting that the Office failed to mail an action under 35 U.S.C. 132 not later than four months after the date of applicants reply under 35 [U.S.C.] 111 of December 19, 2005.

Applicants' argument is not persuasive. On March 6, 2006, the Office issued an action as a result of the examination conducted pursuant to 35 U.S.C. 131. The subsequent action in this case does not negate the fact that a first Office action was mailed on March 6, 2006. Accordingly, the period of examination delay was properly calculated based on the March 6, 2006 date. In addition, Office records reveal that the Office action, mailed March 6, 2006, was properly mailed to the correspondence address of record. Thereafter, on May 16, 2006, Applicant filed a Change of Correspondence Address. Regarding overlap, because the Office concludes that Applicant is not entitled to 145 days of patent term adjustment in connection with the mailing of the

subsequent final Office action mailed September 11, 2009, there is no overlapping delay in connection with the mailing of the subsequent final Office action mailed September 11, 2009.

Moreover, Applicant filed a reply to the final Office action on February 9, 2007. The reply, a Request for Continued Examination ("RCE") and Amendment, was filed three months and 248 days after the mailing of the final Office action. Pursuant to 37 CFR 1.704(b), a reduction of 248 days, beginning on the day after the date that is three months after the reply was due, June 7, 2007, and ending on the date the reply was filed, February 20, 2007, is appropriate.

Office records reveal that the Amendment filed with the RCE was non-compliant. Applicant was so notified in a Notice of Non-Compliant Amendment, mailed May 1, 2007. Applicant thereafter filed an Amendment on May 9, 2007. Pursuant to 37 CFR 1.704(c)(7), a reduction of 89 days, beginning on the day after the date the reply having an omission was filed, February 10, 2007, and ending on the date that the reply or other paper correcting the omission was filed, May 9, 2007, is appropriate.

Office records reveal further that Applicants filed a reply to a non-final Office action on January 29, 2009. Applicants thereafter filed an Information Disclosure Statement ("IDS") on May 8, 2009. Pursuant to 37 CFR 1.704(c)(8), the reduction commenced beginning on the day after the date the initial reply was filed, January 30, 2009, and ending on the date that the IDS was filed, May 89, 2009. As such, pursuant to 37 CFR 1.704(c)(8), the application is assessed a reduction of 99 days.

Regarding the reduction of 120 days in connection with the filing of a drawing amendment under 37 CFR 1.312, filed putatively filed on October 29, 2010, a review of Office records confirm that no drawing Amendment was filed by Applicants on October 29, 2009. The reduction of 120 days is in error and has been removed.

The Office will *sua sponte* issue a certificate of correction. Pursuant to 37 CFR 1.322, the Office will not issue a certificate of correction without first providing assignee or patentee an opportunity to be heard. Accordingly, patentees are given **one (1) month or thirty (30) days**, whichever is longer, from the mail date of this decision to respond. No extensions of time will be granted under § 1.136.

Nothing in this decision shall be construed as a waiver of the requirement of 35 U.S.C. 154(b)(4) that any civil action by an applicant dissatisfied with a determination made by the Director under 35 U.S.C. 154(b)(3) be filed in the United States District Court for the District of Columbia within 180 days after the grant of the patent.

The Office acknowledges submission of the $200.00 fee set forth in 37 CFR 1.18(e). No additional fees are required.

The application file is being forwarded to the Certificates of Correction Branch for issuance of a certificate of correction in order to rectify this error. The Office will issue a certificate of

correction indicating that the term of the above-identified patent is extended or adjusted by **TWENTY-FOUR (24) DAYS** (adjustments of 748 days less reductions of 724 days.

Telephone inquiries specific to this matter should be directed to the undersigned at (571) 272-3232.

/DLW/

Derek L. Woods
Attorney
Office of Petitions

Enclosure: Copy of DRAFT Certificate of Correction

UNITED STATES PATENT AND TRADEMARK OFFICE

# CERTIFICATE OF CORRECTION

PATENT : 7,737,264 B2

DATED : **June 15, 2010**

INVENTOR(S) : Thrue et al.

It is certified that error appears in the above-identified patent and that said Letters Patent is hereby corrected as shown below:

On the cover page,

[*] Notice: Subject to any disclaimer, the term of this patent is extended or adjusted under 35 USC 154(b) by 185 days.

Delete the phrase "by 185 days" and insert – by 24 days--

UNITED STATES PATENT AND TRADEMARK OFFICE

Commissioner for Patents
United States Patent and Trademark Office
P.O. Box 1450
Alexandria, VA 22313-1450
www.uspto.gov

**HITT GAINES P.C.**
**P.O. BOX 832570**
**RICHARDSON TX 75083**

MAILED
AUG 19 2011
OFFICE OF PETITIONS

| | | |
|---|---|---|
| Patent No. 7,970,888 | : | |
| Issue Date: June 28, 2011 | : | |
| Application No. 10/407,910 | : | ON PETITION |
| Filed: April 3, 2003 | : | |
| Attorney Docket No. U4EA-0001 | : | |

This is a decision on the petition filed August 3, 2011, a request under 37 CFR 3.81(b) to correct the name of the assignee on the front page of the above-identified patent by way of a Certificate of Correction.

The petition is **GRANTED**.

The patent file is being forwarded to the Certificates of Correction Branch for issuance of the requested Certificate of Correction.

Telephone inquiries concerning this decision may be directed to the Kimberly Inabinet at (571) 272-4618. Inquiries regarding the issuance of a certificate of correction should be directed to the Certificate of Correction Branch at (703) 756-1814.

/Carl Friedman/
Carl Friedman
Petitions Examiner
Office of Petitions

UNITED STATES PATENT AND TRADEMARK OFFICE

Commissioner for Patents
United States Patent and Trademark Office
P.O. Box 1450
Alexandria, VA 22313-1450
www.uspto.gov

Paper No.

MAILED
AUG 22 2011
OFFICE OF PETITIONS

Cervitech, Inc.
c/o NuVasive, Inc.
7475 Lusk Blvd.
San Diego CA 92121

| | | |
|---|---|---|
| In re Application of | : | |
| Link et al. | : | |
| Application No. 10/407,946 | : | |
| Filing Date: April 7, 2003 | : | DECISION ON PETITION |
| Attorney Docket Number: 360US1 | : | PURSUANT TO 37 C.F.R. |
| Title: CERVICAL INTERVERTEBRAL | : | § 3.81(B) |
| DISK PROSTHESIS | : | |

This is a decision on the petition pursuant to 37 C.F.R. § 3.81(b), filed August 8, 2011, to correct the Assignee's information on the Issue Fee Transmittal Form PTOL-85(b).

The petition is **GRANTED** to the extent that a Certificate of Correction will be issued, correcting the Assignee information to "Cervitech, Inc."

With this petition, Petitioner requests that a Certificate of Correction be issued to correct the assignee information that appears on the face of the patent. Petitioner has requested that the name of the Assignee should be changed from NuVasive, Inc. to Cervitech, Inc.

37 C.F.R. § 3.81(b), effective June 25, 2004, reads:

> (b) After payment of the issue fee: Any request for issuance of an application in the name of the assignee submitted after the date of payment of the issue fee, and any request for a patent to be corrected to state the name of the assignee, must state that the assignment was submitted for recordation as set forth in 3.11 before issuance of the patent, and must include a request for a certificate of correction under 1.323 of this chapter (accompanied by the fee set forth in 1.20(a)) and the processing fee set forth in 1.17(i) of this chapter.

Petitioner has set forth that the assignment was submitted for recordation as set forth in 37 C.F.R. § 3.11 before issuance of the patent, and Office records confirm that an assignment was received in the Office on June 27, 2003, listing Cervitech, Inc. as the Assignee.

Payment of the required $100 certificate of correction fee and the $130 processing fee is acknowledged.

The Certificates of Correction Branch will be notified of this decision so that the requested Certificate of Correction can be issued, correcting the Assignee information to "Cervitech, Inc."

Telephone inquiries regarding *this decision* should be directed to the undersigned at (571) 272-3225. Any questions concerning the issuance of a certificate of correction should be directed to the Certificates of Correction Branch at (703) 756-1814.

/Paul Shanoski/
Paul Shanoski
Senior Attorney
Office of Petitions

UNITED STATES PATENT AND TRADEMARK OFFICE

Commissioner for Patents
United States Patent and Trademark Office
P.O. Box 1450
Alexandria, VA 22313-1450
www.uspto.gov

Patent No. : 6843931
Ser. No. : 10/408699
Inventor(s) : Richard SAPIENZA
Issued : 01/18/2005
Title : ENVIRONMENTALLY BENIGN ANTI-ICING OR DEICING FLUIDS
Docket No. : 1028-001H

Re: Request for Certificate of Correction

Consideration has been given your request for the issuance of a certificate of correction for the above-identified patent under the provisions of Rule(s) 1.322 and/or 1.323.

Assignees' names and addresses (assignment data) printed in a patent, are based *solely* on information supplied in the appropriate space for identifying the assignment data, i.e., item 3 of the Issue Fee Transmittal Form PTOL-85B. Granting of a request under 37 CFR 3.81(b) is required to correct applicant's error providing ***incorrect or erroneous*** assignment data, *before* issuance of a Certificate of Correction, under 37 CFR 1.323 *(see Manual of Patent Examining Procedures (M.P.E.P) Chp.1400, sect. 1481).* This procedure is required *at any time after the issue fee is paid*, including after issuance of the patent.

In view of the foregoing, your request, in this matter, is hereby denied.

A request to correct the Assignee under 37 CFR 3.81(b) should include:

A. **the processing fee set forth in 37 CFR 1. 17(i) (currently $130);**
B. a statement that the failure to include the correct assignee name on the PTOL-85B was inadvertent; and
C. a copy of the Notice of Recordation of Assignment Document, reflecting the reel and frame number where the assignment(s) is recorded and/or reflecting proof of *the date* the assignment was submitted for recordation.

*In the Request*, Applicant(s) may request that the file be forwarded to Certificates of Correction Branch, for issuance of a Certificate of Correction, if the Request is granted.

Any request under 37 CFR 3.81(b) should be directed to the following address or facsimile number:

By mail: Mail Stop PETITIONS
Commissioner for Patents
Post Office Box 1450
Alexandria, VA 22313-1450

By hand: Customer Service Window
Mail Stop Petitions
Randolph Building
401 Dulany Street
Alexandria, VA 22314

By fax: (703) 872-9306
ATTN: Office of Petitions

If a fee (currently $100) was previously submitted for consideration of a Request for Certificate of Correction, under CFR 1.323, to correct assignment data, no additional fee is required.

**Tasneem Siddiqui**
For Mary Diggs (Supervisor)
Decisions & Certificates
of Correction Branch
(703) **756-1593** or (703) 756-1814
Date: 9/29/2010

Address: Alan B. Clement
LOCKE LORD BISSELL & LIDDELL, LLP
3 World Financial Center
New York, N.Y. 10281-2101

ts/md

UNITED STATES PATENT AND TRADEMARK OFFICE

COMMISSIONER FOR PATENTS
UNITED STATES PATENT AND TRADEMARK OFFICE
P.O. BOX 1450
ALEXANDRIA, VA 22313-1450
WWW.USPTO.GOV

Paper No.

MAILED
DEC 06 2010
OFFICE OF PETITIONS

Locke Lord Bissell & Liddell LLP
Attn: Michael Ritchie, Docketing
2200 Ross Avenue
Suite # 2200
DALLAS TX 75201-6776

| | | |
|---|---|---|
| In re Application of | : | |
| Sapienza | : | |
| Application No. 10/408,699 | : | DECISION ON PETITION |
| Patent No. 6,843,931 | : | PURSUANT TO |
| Filed: April 7, 2003 | : | 37 C.F.R. § 3.81(B) |
| Issue Date: January 18, 2005 | : | |
| Attorney Docket Number: 1028- | : | |
| 001H | : | |
| Title: ENVIRONMENTALLY BENIGN | : | |
| ANTI-ICING OR DEICING FLUIDS | : | |

This is a decision on the petition pursuant to 37 C.F.R. § 3.81(b)[1], filed October 20, 2010, to correct the Assignee's information on the Issue Fee Transmittal Form PTOL-85(b).

Petitioner states that a typographical error appears on form PTOL-85(b), and that an incorrect assignee was listed thereon.[2]

37 C.F.R. § 3.81(b), effective June 25, 2004, reads:

(b) After payment of the issue fee: Any request for issuance of an application in the name of the assignee submitted after the date of payment of the issue fee, and any request for a patent to be corrected to state the name of the assignee, must state that the assignment was submitted for recordation as set forth in 3.11 before issuance of the patent, and must include a request for a certificate of correction under 1.323 of this chapter (accompanied by the fee set forth in 1.20(a)) and the processing fee set forth in 1.17(i) of

1 See Official Gazette, June 22, 2004.
2 Petition, page 1.

this chapter.

The present request pursuant to 37 C.F.R. § 3.81(b) was accompanied by a request for a certificate of correction, a copy of the assignment, and a copy of the notice of recordation that establishes that the assignment (which contains the correct assignee) was submitted for recordation in the Office on September 21, 2010.

The $130 petition fee will be charged to Deposit Account No. 50-4459 in due course, as authorized on the second page of this petition.

The fee associated with the filing of a request for a certificate of correction was submitted preveniently on September 21, 2010.

Petitioner has failed to comply with the provisions of this title, and as such, the request cannot be granted. It is clear that the assignment was not submitted for recordation as set forth in 37 C.F.R. § 3.11 before the issuance of this patent. The patent issued on January 18, 2005, and the assignment was not submitted for recordation until more than 5 years had passed.

Hence, the petition must be **DISMISSED.**

Any reply must be submitted within **TWO MONTHS** from the mail date of this decision. Extensions of time under 37 C.F.R. § 1.136(a) are permitted. The reply should include a cover letter entitled "Renewed Petition Under 37 C.F.R. § 3.81(b)". This is not a final agency action within the meaning of 5 U.S.C § 704.

The renewed petition should indicate in a prominent manner that the attorney handling this matter is Paul Shanoski, and may be submitted by mail[3], hand-delivery[4], or facsimile[5]. Registered users of EFS-Web may alternatively submit a response to this decision via EFS-Web[6].

If responding by mail, Petitioner is advised not to place the undersigned's name on the envelope. Only the information that appears in the footnote should be included - adding anything else to the address will delay the delivery of the response to the undersigned.

---

3 Mail Stop Petition, Commissioner for Patents, United States Patent and Trademark Office, P.O. Box 1450, Alexandria, VA, 22313-1450.
4 Customer Window, Randolph Building, 401 Dulaney Street, Alexandria, VA, 22314.
5 (571) 273-8300- please note this is a central facsimile number.
6 https://sportal.uspto.gov/authenticate/authenticateuserlocalepf.html

Telephone inquiries regarding *this decision* should be directed to the undersigned at (571) 272-3225[7].

/Paul Shanoski/
Paul Shanoski
Senior Attorney
Office of Petitions

7 Petitioner will note that all practice before the Office should be in writing, and the action of the Office will be based exclusively on the written record in the Office. See 37 C.F.R. § 1.2. As such, Petitioner is reminded that no telephone discussion may be controlling or considered authority for any further action(s) of Petitioner.

UNITED STATES PATENT AND TRADEMARK OFFICE

Commissioner for Patents
United States Patent and Trademark Office
P.O. Box 1450
Alexandria, VA 22313-1450
www.uspto.gov

WILSON, SONSINI, GOODRICH & ROSATI
650 PAGE MILL ROAD
PALO ALTO CA 94304-1050

**MAILED**
FEB 08 2012
**OFFICE OF PETITIONS**

| | | |
|---|---|---|
| In re Patent No. 7,124,394 | : | |
| Issued: October 17, 2006 | : | |
| Application No. 10/408,928 | : | ON PETITION |
| Filed: April 6, 2003 | : | |
| Attorney Docket No: 29511-707.201 | : | |

This is a decision regarding your request for acceptance of a fee deficiency submission filed January 25, 2012 under 37 CFR 1.28.

On September 1, 1998, the Court of Appeals for the Federal Circuit held that 37 CFR 1.28( c) is the sole provision governing the time for correction of the erroneous payment of the issue fee as a small entity. See DH Technology v. Synergystex International, Inc.. 154 F.33d 1333, 47 USPQ2d 1865 (Fed. Cir. Sept. 1, 1998).

The Office no longer investigates or rejects original or reissue applications under 37 CFR 1.56. 1098 Off. Gaz. Pat. Office 502 (January 3, 1989). Therefore nothing in this Notice is intended to imply that an investigation was done.

Your fee deficiency submission under 37 CFR 1.28 is hereby accepted and the petition is **GRANTED**.

Inquiries related to this communication should be directed to the Office of Petitions Staff at (571) 272-3282.

Patricia Faison-Ball
Senior Petitions Attorney
Office of Petitions

PTO/SB/66 (03-09)
Approved for use through 03/31/2012. OMB 0651-0016
U.S. Patent and Trademark Office: U.S. DEPARTMENT OF COMMERCE
Under the Paperwork Reduction Act of 1995, no persons are required to respond to a collection of information unless it displays valid OMB control number.

# PETITION TO ACCEPT UNINTENTIONALLY DELAYED PAYMENT OF MAINTENANCE FEE IN AN EXPIRED PATENT (37 CFR 1.378(c))

| Patent Number | Issue Date (YYYY-MM-DD) | Application Number | Filing Date (YYYY-MM-DD) | Docket Number (if applicable) |
|---|---|---|---|---|
| 6977596 | 2005-12-20 | 10409087 | 2003-04-09 | |

CAUTION: Maintenance fee (and surcharge, if any) payment must correctly identify: (1) the patent number and (2) the application number of the actual U.S. application leading to issuance of that patent to ensure the fee(s) is/are associated with the correct patent. 37 CFR 1.366(c) and (d).

SMALL ENTITY
☒ Patentee claims, or has previously claimed, small entity status. See 37 CFR 1.27.

LOSS OF ENTITLEMENT TO SMALL ENTITY STATUS
☐ Patentee is no longer entitled to small entity status. See 37 CFR 1.27(g)

| NOT Small Entity | | Small Entity | |
|---|---|---|---|
| Fee | Code | Fee | Code |
| ○ 3 ½ year | (1551) | ◉ 3 ½ year | (2551) |
| ○ 7 ½ year | (1552) | ○ 7 ½ year | (2552) |
| ○ 11 ½ year | (1553) | ○ 11 ½ year | (2553) |

SURCHARGE
The surcharge required by 37 CFR 1.20(i)(2) (Fee Code 1558) must be paid as a condition of accepting unintentionally delayed payment of the maintenance fee.

MAINTENANCE FEE (37 CFR 1.20(e)-(g))
The appropriate maintenance fee must be submitted with this petition.

STATEMENT
THE UNDERSIGNED CERTIFIES THAT THE DELAY IN PAYMENT OF THE MAINTENANCE FEE TO THIS PATENT WAS UNINTENTIONAL

PETITIONER(S) REQUEST THAT THE DELAYED PAYMENT OF THE MAINTENANCE FEE BE ACCEPTED AND THE PATENT REINSTATED

THIS PORTION MUST BE COMPLETED BY THE SIGNATORY OR SIGNATORIES

37 CFR 1.378(d) states: "Any petition under this section must be signed by an attorney or agent registered to practice before the Patent and Trademark Office, or by the patentee, the assignee, or other party in interest."

I certify, in accordance with 37 CFR 1.4(d)(4) that I am

◉ An attorney or agent registered to practice before the Patent and Trademark Office

○ A sole patentee

○ A joint patentee; I certify that I am authorized to sign this submission on behalf of all the other patentees.

○ A joint patentee; all of whom are signing this e-petition

○ The assignee of record of the entire interest

Under the Paperwork Reduction Act of 1995, no persons are required to respond to a collection of information unless it displays valid OMB control number.

| Patent Practitioner | | | |
|---|---|---|---|
| A signature of the applicant or representative is required in accordance with 37 CFR 1.33 and 10.18. Please see 37 CFR 1.4(d) for the form of the signature | | | |
| Signature | /Winfield J Brown Jr/ | Date (YYYY-MM-DD) | 2010-11-16 |
| Name | Winfield J Brown Jr | Registration Number | 31907 |

This collection of information is required by 37 CFR 1.378(c). The information is required to obtain or retain a benefit by the public which is to file (and by the USPTO to process) an application. Confidentiality is governed by 35 U.S.C. 122 and 37 CFR 1.11 and 1.14. This collection is estimated to take 1 hour to complete, including gathering, preparing, and submitting the completed application form to the USPTO. Time will vary depending upon the individual case. Any comments on the amount of time you require to complete this form and/ or suggestions for reducing this burden, should be sent to the Chief Information Officer, U.S. Patent and Trademark Office, U.S. Department of Commerce, P.O. Box 1450, Alexandria, VA 22313-1450. DO NOT SEND FEES OR COMPLETED FORMS TO THIS ADDRESS. **This form can only be used when in conjunction with EFS-Web. If this form is mailed to the USPTO, it may cause delays in reinstating the patent.**

# Privacy Act Statement

The Privacy Act of 1974 (P.L. 93-579) requires that you be given certain information in connection with your submission of the attached form related to a patent application or patent. Accordingly, pursuant to the requirements of the Act, please be advised that: (1) the general authority for the collection of this information is 35 U.S.C. 2(b)(2); (2) furnishing of the information solicited is voluntary; and (3) the principal purpose for which the information is used by the U.S. Patent and Trademark Office is to process and/or examine your submission related to a patent application or patent. If you do not furnish the requested information, the U.S. Patent and Trademark Office may not be able to process and/or examine your submission, which may result in termination of proceedings or abandonment of the application or expiration of the patent.

The information provided by you in this form will be subject to the following routine uses:

1. The information on this form will be treated confidentially to the extent allowed under the Freedom of Information Act (5 U.S.C. 552) and the Privacy Act (5 U.S.C. 552a). Records from this system of records may be disclosed to the Department of Justice to determine whether the Freedom of Information Act requires disclosure of these records.

2. A record from this system of records may be disclosed, as a routine use, in the course of presenting evidence to a court, magistrate, or administrative tribunal, including disclosures to opposing counsel in the course of settlement negotiations.

3. A record in this system of records may be disclosed, as a routine use, to a Member of Congress submitting a request involving an individual, to whom the record pertains, when the individual has requested assistance from the Member with respect to the subject matter of the record.

4. A record in this system of records may be disclosed, as a routine use, to a contractor of the Agency having need for the information in order to perform a contract. Recipients of information shall be required to comply with the requirements of the Privacy Act of 1974, as amended, pursuant to 5 U.S.C. 552a(m).

5. A record related to an International Application filed under the Patent Cooperation Treaty in this system of records may be disclosed, as a routine use, to the International Bureau of the World Intellectual Property Organization, pursuant to the Patent Cooperation Treaty.

6. A record in this system of records may be disclosed, as a routine use, to another federal agency for purposes of National Security review (35 U.S.C. 181) and for review pursuant to the Atomic Energy Act (42 U.S.C. 218(c)).

7. A record from this system of records may be disclosed, as a routine use, to the Administrator, General Services, or his/her designee, during an inspection of records conducted by GSA as part of that agency's responsibility to recommend improvements in records management practices and programs, under authority of 44 U.S.C. 2904 and 2906. Such disclosure shall be made in accordance with the GSA regulations governing inspection of records for this purpose, and any other relevant (i.e., GSA or Commerce) directive. Such disclosure shall not be used to make determinations about individuals.

8. A record from this system of records may be disclosed, as a routine use, to the public after either publication of the application pursuant to 35 U.S.C. 122(b) or issuance of a patent pursuant to 35 U.S.C. 151. Further, a record may be disclosed, subject to the limitations of 37 CFR 1.14, as a routine use, to the public if the record was filed in an application which became abandoned or in which the proceedings were terminated and which application is referenced by either a published application, an application open to public inspections or an issued patent.

9. A record from this system of records may be disclosed, as a routine use, to a Federal, State, or local law enforcement agency, if the USPTO becomes aware of a violation or potential violation of law or regulation.

UNITED STATES PATENT AND TRADEMARK OFFICE

Commissioner for Patents
United States Patent and Trademark Office
P.O. Box 1450
Alexandria, VA 22313-1450
www.uspto.gov

In re Patent No. 6977596
Issue Date: December 20,2005
Application No. 10409087
Filed: April 9,2003
Attorney Docket No. 2003-01

:
:DECISION GRANTING PETITION
:UNDER 37 CFR 1.378(c)
:

This is a decision on the electronic petition, filed November 16,2010 ,under 37 CFR 1.378(c) to accept the unintentionally delayed payment of the 3.5 year maintenance fee for the above-identified patent.

The petition is **GRANTED**.

The maintenance fee is accepted, and the above-identified patent reinstated as of November 16,2010 . This decision also constitutes notice that the fee has been accepted. An electronic copy of the petition and this decision has been created as an entry in the Image File Wrapper. Nevertheless, petitioner should print and retain an independent copy.

Telephone inquiries related to this electronic decision should be directed to the Electronic Business Center at 1-866-217-9197.

UNITED STATES PATENT AND TRADEMARK OFFICE

Commissioner for Patents
United States Patent and Trademark Office
P.O. Box 1450
Alexandria, VA 22313-1450
www.uspto.gov

GIBBONS P.C.
ONE GATEWAY CENTER
NEWARK, NJ 07102

**MAILED**

**SEP 2 1 2010**

**OFFICE OF PETITIONS**

In re Patent No. 7,036,016 :
Issue Date: April 25, 2006 :
Application No. 10/409,574 :
Filed: April 8, 2003 :
Patentee(s) A. James Smith Jr. :

ON PETITION

This is a decision on the petition under 37 CFR 1.378(c), filed July 6, 2010, to accept the delayed payment of a maintenance fee for the above-identified patent.

The petition is **GRANTED**.

The maintenance fee is hereby accepted and the above-identified patent is reinstated as of the mail date of this decision.

The file does not indicate a change of address has been submitted, although the address given on the petition differs from the address of record. If appropriate, a change of address should be filed in accordance with MPEP 601.03. A courtesy copy of this decision is being mailed to the address given on the petition; however, the Office will mail all future correspondence solely to the address of record.

Telephone inquiries concerning this decision should be directed to Irvin Dingle at (571) 272-3210.

Irvin Dingle
Petitions Examiner
Office of Petitions

cc: A. James Smith Jr.
4021 Gulf Shore Blvd. N., #1905
Naples, FL 34103

UNITED STATES PATENT AND TRADEMARK OFFICE

Commissioner for Patents
United States Patent and Trademark Office
P.O. Box 1450
Alexandria, VA 22313-1450
www.uspto.gov

MAILED

OCT 12 2010

OFFICE OF PETITIONS

FISH & RICHARDSON P.C.
P.O. Box 1022
MINNEAPOLIS MN 55440-1022

| | | |
|---|---|---|
| In re Patent of Ethier et al. | : | DECISION ON REQUEST |
| Patent No. 7,653,876 | : | FOR RECONSIDERATION OF |
| Issue Date: January 26, 2010 | : | PATENT TERM ADJUSTMENT |
| Application No. 10/409,622 | : | and |
| Filed: April 7, 2003 | : | NOTICE OF INTENT TO ISSUE |
| Atty. Docket No. 07844-587001 | : | CERTIFICATE OF CORRECTION |

This is a decision on the petition filed on May 20, 2010, which is being treated as a petition under 37 CFR 1.705(d) requesting that the patent term adjustment indicated on the above-identified patent be corrected to indicate that the term of the above-identified patent is extended or adjusted by four hundred fifty-three (453) days.

The petition was timely filed within one month of the mailing of a Decision on Request for Recalculation of Patent Term Adjustment in View of Wyeth and Notice of Intent to Issue Certificate of Correction, mailed April 20, 2010. The Office acknowledges receipt of the required $200.00 fee under 37 CFR 1.18(e).

The petition to correct the patent term adjustment indicated on the above-identified patent to indicate that the term of the above-identified patent is extended or adjusted by four hundred fifty-three (453) days is **GRANTED**.

Per 35 U.S.C. § 154(b)(1)(B)(i), B Delay does not include "any time consumed by continued examination of the application requested by the applicant under section 132(b)." The maximum period of B Delay in this case is 790 days, which is the number of days beginning on April 8, 2006, the day after the date three years after the application's filing date, and ending on June 5, 2008, the day before the date the RCE was filed. As stated in 35 U.S.C. 154(b)(1)(B)(ii), B delay does not include "any time consumed by appellate review by the Board of Patent Appeals and Interferences." The period of B delay does not include the 723 day period beginning on April 17, 2006, the date the Notice of

Appeal was filed, and ending on April 8, 2008, the day the Board of Patent Appeals and Interferences mailed a decision affirming the examiner. Excluding the 723 days consumed by appellate review results in a period of B delay of 67 days (790 - 723).

The correct patent term adjustment is 453 days, which is the sum of 422 days of A Delay and 97 days of adjusted B Delay reduced by 36 days of Applicant delay.

The application is being forwarded to the Certificates of Correction Branch for issuance of a certificate of correction. The Office will issue a certificate of correction indicating that the term of the above-identified patent is extended or adjusted by **four hundred fifty-three (453)** days.

Telephone inquiries specific to this matter should be directed to the undersigned at (571) 272-3230.

Shirene Willis Brantley

Shirene Willis Brantley
Senior Petitions Attorney
Office of Petitions

Enclosure: Copy of DRAFT Certificate of Correction

UNITED STATES PATENT AND TRADEMARK OFFICE

# CERTIFICATE OF CORRECTION

PATENT : 7,653,876 B2

DATED : **January 26, 2010** **DRAFT**

INVENTOR(S) : Ethier et al.

It is certified that error appears in the above-identified patent and that said Letters Patent is hereby corrected as shown below:

On the cover page,

[*] Notice: Subject to any disclaimer, the term of this patent is extended or adjusted under 35 U.S.C. 154(b) by 778 days

Delete the phrase "by 778 days" and insert – by 453 days--

UNITED STATES PATENT AND TRADEMARK OFFICE

Commissioner for Patents
United States Patent and Trademark Office
P.O. Box 1450
Alexandria, VA 22313-1450
www.uspto.gov

BANNER & WITCOFF , LTD
ATTORNEYS FOR CLIENT NUMBER 007412
1100 13th STREET, N.W.
SUITE 1200
WASHINGTON DC 20005-4051

MAILED
NOV 22 2010
OFFICE OF PETITIONS

In re Application of :
Painter :
Application No. 10/409,910 :
Filed: April 8, 2003 :
Atty Docket No. **007412.01074** :
:

DECISION ON APPLICATION
FOR PATENT TERM ADJUSTMENT

This is a decision on the "APPLICATION FOR PATENT TERM ADJUSTMENT UNDER 37 CFR 1.705(b)" filed September 24, 2010. Applicants request that the initial determination of patent term adjustment under 35 U.S.C. 154(b) be corrected from one hundred and ninety-seven days (197) days to two hundred and ninety-three (293) days.

The application for patent term adjustment is **GRANTED TO THE EXTENT INDICATED HEREIN.**

The Office has updated the PALM and PAIR screens to reflect that the Patent Term Adjustment (PTA) determination at the time of the mailing of the Notice of Allowance is tow hundred and forty-three **(243)** days. A copy of the updated PALM screen, showing the correct determination, is enclosed.

On June 24, 2010, the Office mailed the Determination of Patent Term Adjustment under 35 U.S.C. 154(b) in the above-identified application. The Notice stated that the patent term adjustment (PTA) to date is 197 days. On September 24, 2010, applicants timely submitted the instant application for patent term adjustment.[1] Applicants dispute the period of reduction of 46 days for the filing of an Information Disclosure Statement (IDS) on March 4, 2007 and the reduction of 50 days for the filing of an IDS on March 4, 2008.

[1] PALM records indicate that the issue fee payment was received on September 24, 2010.

Applicant's argument relative the reduction of the patent term adjustment of 46 days for the purported filing of an IDS on March 4, 2007, is noted and is persuasive. A review of the file history did not reveal an IDS filed March 4, 2007. **Accordingly, the reduction of 46 days is being removed.**

Applicant's argument relative to the reduction of the patent term adjustment of 50 days is noted, but is not persuasive. Pursuant to 37 CFR 1.704(c)(8), the submission of a supplemental reply or other paper, other than a supplemental reply or other paper expressly requested by the examiner, after a reply has been filed, is a failure to engage in reasonable efforts to conclude prosecution. It is noted that an Information Disclosure Statement (IDS) was filed on March 5, 2008, 50 days after a Request for Continued Examination under 37 CFR 1.114 and amendment were filed on January 15, 2008. The record does not support a conclusion that the Examiner expressly requested the filing of the IDS. Further review of the Information Disclosure Statement filed March 5, 2008, did not reveal a proper statement under 37 CFR 1.704(d).[2] Accordingly, pursuant to 37 CFR 1.704(c)(8), a period of reduction of fifty (50) days was entered with said period being calculated beginning on the day after the date the initial reply was filed, January 16, 2008, and ending on the date the supplemental reply was filed March 5, 2008. The reduction of 50 days will not be removed.

---

[2] 37 CFR 1.704(d) provides that:

> (d) A paper containing only an information disclosure statement in compliance with §§ 1.97 and 1.98 will not be considered a failure to engage in reasonable efforts to conclude prosecution (processing or examination) of the application under paragraphs (c)(6), (c)(8), (c)(9), or (c)(10) of this section if it is accompanied by a statement that each item of information contained in the information disclosure statement was first cited in any communication from a foreign patent office in a counterpart application and that this communication was not received by any individual designated in § 1.56(c) more than thirty days prior to the filing of the information disclosure statement. This thirty-day period is not extendable.

In view thereof, the patent term adjustment at the time of the mailing of the notice of allowance is 243 days (496 days of Office delay - 253 days of applicant delay).

Applicants are reminded that any delays by the Office pursuant to 37 CFR 1.702(a)(4) and 1.702(b) and any applicant delays under 37 CFR 1.704(c)(10) will be calculated at the time of the issuance of the patent and Applicants will be notified in the Issue Notification letter that is mailed to applicants approximately three weeks prior to issuance.

Submission of the $200.00 fee set forth in 37 C.F.R. § 1.18(e) is acknowledged. No additional fee is required.

The Office of Data Management has been advised of this decision. This matter is being referred to the Office of Data Management for issuance of the patent.

Telephone inquiries specific to this matter should be directed to the undersigned at (571) 272-3222.

/Kenya A. McLaughlin/

Kenya A. Mclaughlin
Petitions Attorney
Office of Petitions

Enclosure: Copy of updated PALM screen

# Patent Term Adjustments

PTA/PTE Information | Patent Term Adjustment | Patent Term Extension

Application Number*: 10409910 Search | Explanation of PTA Calculation | Explanation of PTE Calculation

## PTA Calculations for Application: 10409910

| | | | |
|---|---|---|---|
| Application Filing Date | 04/08/2003 | OverLapping Days Between (A and B) or (A and C) | 0 |
| Issue Date of Patent | | Non-Overlapping USPTO Delays: | 496 |
| A Delays | 496 | PTO Manual Adjustment | 46 |
| B Delays | 0 | Applicant Delay (APPL) | 299 |
| C Delays | 0 | Total PTA (days) | 243 |

* - Sorted Column

## File Contents History

| Action Number | Action Recorded Date | Action Due Date | Action Code | Action Description | Duration PTO | Duration APPL | Parent Action Number |
|---|---|---|---|---|---|---|---|
| 115 | 11/15/2010 | | P028 | Adjustment of PTA Calculation by PTO | 46 | | 0 |
| 107 | 06/24/2010 | | MN/=. | Mail Notice of Allowance | | | 0 |
| 106 | 06/22/2010 | | IREV | Issue Revision Completed | | | 0 |
| 105 | 06/22/2010 | | DVER | Document Verification | | | 0 |
| 104 | 06/22/2010 | | N/=. | Notice of Allowance Data Verification Completed | | | 0 |
| 102 | 06/18/2010 | | CNTA | Notice of Allowability | | | 0 |
| 97 | 04/14/2010 | | FWDX | Date Forwarded to Examiner | | | 0 |
| 94 | 04/14/2010 | | ABN9 | Disposal for a RCE / CPA / R129 | | | 0 |
| 96 | 04/08/2010 | | AMSB | Amendment Submitted/Entered with Filing of CPA/RCE | | | 0 |
| 95 | 04/08/2010 | 03/08/2010 | RCEX | Request for Continued Examination (RCE) | | 31 | 90 |
| 93 | 04/08/2010 | | BRCE | Workflow - Request for RCE - Begin | | | 0 |
| 92 | 01/13/2010 | | PA.. | Change in Power of Attorney (May Include Associate POA) | | | 0 |
| 91 | 01/12/2010 | | C.AD | Correspondence Address Change | | | 0 |
| 90 | 12/08/2009 | | MCTFR | Mail Final Rejection (PTOL - 326) | | | 0 |
| 89 | 12/07/2009 | | CTFR | Final Rejection | | | 0 |
| 86 | 10/14/2009 | | FWDX | Date Forwarded to Examiner | | | 0 |
| 85 | 08/27/2009 | | A... | Response after Non-Final Action | | | 0 |
| 83 | 05/26/2009 | | CTNF | Non-Final Rejection | | | 0 |
| 79 | 04/13/2009 | | APBR | Appeal Brief Review Complete | | | 0 |
| 78 | 04/13/2009 | | FWDX | Date Forwarded to Examiner | | | 0 |
| 77 | 03/24/2009 | | AP.B | Appeal Brief Filed | | | 0 |
| 76 | 02/19/2009 | | MCTAV | Mail Advisory Action (PTOL - 303) | | | 0 |
| 75 | 02/17/2009 | | CTAV | Advisory Action (PTOL-303) | | | 0 |
| 74 | 02/11/2009 | | FWDX | Date Forwarded to Examiner | | | 0 |
| 73 | 01/26/2009 | | AP/A | Amendment/Argument after Notice of Appeal | | | 0 |
| 72 | 01/26/2009 | 01/17/2009 | N/AP | Notice of Appeal Filed | | 9 | 70 |
| 71 | 01/26/2009 | | XT/G | Request for Extension of Time - Granted | | | 0 |
| 70 | 10/17/2008 | | MCTFR | Mail Final Rejection (PTOL - 326) | | | 0 |
| 69 | 09/28/2008 | | CTFR | Final Rejection | | | 0 |
| 66 | 08/03/2008 | | FWDX | Date Forwarded to Examiner | | | 0 |
| 65 | 06/29/2008 | | A... | Response after Non-Final Action | | | 0 |
| 64 | 04/07/2008 | | MCTNF | Mail Non-Final Rejection | | | 0 |
| 63 | 04/02/2008 | | CTNF | Non-Final Rejection | | | 0 |
| 52 | 03/19/2008 | | FWDX | Date Forwarded to Examiner | | | 0 |
| 50 | 03/19/2008 | | FWDX | Date Forwarded to Examiner | | | 0 |
| 48 | 03/19/2008 | | ABN9 | Disposal for a RCE / CPA / R129 | | | 0 |
| 57 | 03/05/2008 | | IDSC | Information Disclosure Statement considered | | | 0 |
| 54 | 03/05/2008 | 01/15/2008 | EIDS. | Electronic Information Disclosure Statement | | 50 | 49 |
| 53 | 03/05/2008 | | EIDS. | Electronic Information Disclosure Statement | | | 0 |
| 46 | 03/05/2008 | | WIDS | Information Disclosure Statement (IDS) Filed | | | 0 |
| 51 | 01/15/2008 | | AMSB | Amendment Submitted/Entered with Filing of CPA/RCE | | | 0 |
| 47 | 01/15/2008 | | XT/G | Request for Extension of Time - Granted | | | 0 |
| 45 | 01/15/2008 | | BRCE | Workflow - Request for RCE - Begin | | | 0 |
| 44 | 08/29/2007 | | MM327 | Mail Miscellaneous Communication to Applicant | | | 0 |
| 43 | 08/27/2007 | | M327 | Miscellaneous Communication to Applicant - No Action Count | | | 0 |
| 42 | 08/27/2007 | | MCTAV | Mail Advisory Action (PTOL - 303) | | | 0 |
| 41 | 08/24/2007 | | CTAV | Advisory Action (PTOL-303) | | | 0 |
| 37 | 08/17/2007 | | FWDX | Date Forwarded to Examiner | | | 0 |
| 58 | 08/16/2007 | | IDSC | Information Disclosure Statement considered | | | 0 |
| 40 | 08/16/2007 | | WIDS | Information Disclosure Statement (IDS) Filed | | | 0 |
| 39 | 08/16/2007 | | M844 | Information Disclosure Statement (IDS) Filed | | | 0 |
| 38 | 08/15/2007 | 06/15/2007 | N/AP | Notice of Appeal Filed | | 61 | 32 |
| 36 | 08/15/2007 | | A.NE | Amendment after Final Rejection | | | 0 |
| 35 | 08/15/2007 | | XT/G | Request for Extension of Time - Granted | | | 0 |
| 59 | 04/02/2007 | | IDSC | Information Disclosure Statement considered | | | 0 |

| | | | | | | | |
|---|---|---|---|---|---|---|---|
| 33.7 | 04/02/2007 | | EIDS. | Electronic Information Disclosure Statement | | | 0 |
| 33 | 04/02/2007 | | WIDS | Information Disclosure Statement (IDS) Filed | | | 0 |
| 32 | 03/15/2007 | | MCTFR | Mail Final Rejection (PTOL - 326) | | | 0 |
| 31 | 03/14/2007 | | CTFR | Final Rejection | | | 0 |
| 55 | 03/04/2007 | 01/17/2007 | EIDS. | Electronic Information Disclosure Statement | | 46 | 29 |
| 30 | 01/24/2007 | | FWDX | Date Forwarded to Examiner | | | 0 |
| 29 | 01/17/2007 | | A... | Response after Non-Final Action | | | 0 |
| 28 | 10/17/2006 | | MCTNF | Mail Non-Final Rejection | | | 0 |
| 27 | 10/13/2006 | | CTNF | Non-Final Rejection | | | 0 |
| 26 | 09/23/2006 | | FWDX | Date Forwarded to Examiner | | | 0 |
| 24 | 09/23/2006 | | FWDX | Date Forwarded to Examiner | | | 0 |
| 22 | 09/23/2006 | | ABN9 | Disposal for a RCE / CPA / R129 | | | 0 |
| 25 | 09/21/2006 | | AMSB | Amendment Submitted/Entered with Filing of CPA/RCE | | | 0 |
| 23 | 09/21/2006 | 06/21/2006 | RCEX | Request for Continued Examination (RCE) | | 92 | 19 |
| 21 | 09/21/2006 | | XT/G | Request for Extension of Time - Granted | | | 0 |
| 20 | 09/21/2006 | | BRCE | Workflow - Request for RCE - Begin | | | 0 |
| 19 | 03/21/2006 | | MCTFR | Mail Final Rejection (PTOL - 326) | | | 0 |
| 18 | 03/20/2006 | | CTFR | Final Rejection | | | 0 |
| 17 | 02/02/2006 | | FWDX | Date Forwarded to Examiner | | | 0 |
| 16 | 01/23/2006 | 01/17/2006 | A... | Response after Non-Final Action | | 6 | 14 |
| 15 | 01/04/2006 | | C.ADB | Correspondence Address Change | | | 0 |
| 14 | 10/17/2005 | 06/08/2004 | MCTNF | Mail Non-Final Rejection | 496 | | -1 |
| 13 | 10/14/2005 | | CTNF | Non-Final Rejection | | | 0 |
| 12 | 09/29/2005 | | DOCK | Case Docketed to Examiner in GAU | | | 0 |
| 11 | 03/22/2005 | | DOCK | Case Docketed to Examiner in GAU | | | 0 |
| 10 | 02/17/2004 | | TSSCOMP | IFW TSS Processing by Tech Center Complete | | | 0 |
| 9 | 02/17/2004 | | DOCK | Case Docketed to Examiner in GAU | | | 0 |
| 8 | 10/31/2003 | | OIPE | Application Dispatched from OIPE | | | 0 |
| 7 | 10/31/2003 | | COMP | Application Is Now Complete | | | 0 |
| 6 | 08/25/2003 | 08/21/2003 | ADDFLFEE | Additional Application Filing Fees | | 4 | 4 |
| 5 | 08/25/2003 | | OATHDECL | A statement by one or more inventors satisfying the requirement under 35 USC 115, Oath of the Applic | | | 0 |
| 4 | 05/21/2003 | | INCD | Notice Mailed--Application Incomplete--Filing Date Assigned | | | 0 |
| 3 | 05/20/2003 | | L128 | Cleared by L&R (LARS) | | | 0 |
| 2 | 04/28/2003 | | SCAN | IFW Scan & PACR Auto Security Review | | | 0 |
| 1 | 04/08/2003 | | IEXX | Initial Exam Team nn | | | 0 |

Export to: Excel

UNITED STATES PATENT AND TRADEMARK OFFICE

Commissioner for Patents
United States Patent and Trademark Office
P.O. Box 1450
Alexandria, VA 22313-1450
www.uspto.gov

MAILED

DEC 28 2011

OFFICE OF PETITIONS

**INLIGHT SOLUTIONS, INC.**
**800 BRADBURY, SE**
**ALBUQUERQUE NM 87106**

In re Application of :
John D. Maynard et al :
Application No. 10/410,006 : DECISION ON PETITION
Filed: April 9, 2003 :
Attorney Docket No. P0076.US1 :

This is a decision on the petition under the unintentional provisions of 37 CFR 1.137(b), filed September 28, 2011, to revive the above-identified application.

The petition is **GRANTED**.

The application became abandoned for failure to reply in a timely manner to the final Office action mailed June 25, 2010. A Notice of Abandonment was mailed on January 19, 2011.

The petition satisfies the conditions for revival pursuant to the provisions of 37 CFR 1.137(b) in that (1) the reply in the form of an RCE and an amendment; (2) the petition fee; and (3) the required statement of unintentional delay have been received. Accordingly, the reply to the final Office action mailed June 25, 2010, is accepted as having been unintentionally delayed.

There is no indication that the person signing the petition was ever given a power of attorney to prosecute the application. If the person signing the petition desires to receive future correspondence regarding this application, the appropriate power of attorney documents must be submitted. While a courtesy copy of this decision is being mailed to the person signing the petition, all future correspondence will be directed to the address currently of record until appropriate instructions are received.

Telephone inquiries concerning this decision should be directed to the undersigned at (571) 272-3208.

This application is being referred to Technology Center AU 3777 for appropriate action by the Examiner in the normal course of business.

/KOC/
Karen Creasy
Petitions Examiner
Office of Petitions

Cc:

**V. GERALD GRAFE**
**P.O. BOX 2689**
**CORRALES, NM 87048**

UNITED STATES PATENT AND TRADEMARK OFFICE

Commissioner for Patents
United States Patent and Trademark Office
P.O. Box 1450
Alexandria, VA 22313-1450
www.uspto.gov

**SHERLON ARLEIGH NELSON**
**6 TANGLEWOOD PLACE EAST**
**MONROE TOWNSHIP NJ 08831**

MAILED

FEB 24 2011

OFFICE OF PETITIONS

| | | |
|---|---|---|
| In re Patent No. 7,032,275 | : | |
| Issue Date: April 25, 2006 | : | |
| Application No. 10/410,034 | : | ON PETITION |
| Filed: April 8, 2003 | : | |
| Attorney Docket No. | : | |

This is a decision on the petition under 37 CFR 1.378(c), filed December 20, 2010, to accept the delayed payment of a maintenance fee for the above-identified patent.

The petition is **DISMISSED**.

A petition to accept the unintentionally delayed payment of a maintenance fee under 35 U.S.C. 41(c) and 37 CFR 1.378(c) must be accompanied by: (1) a statement that the delay was unintentional; (2) payment of the appropriate maintenance fee, unless previously submitted; (3) payment of the surcharge set forth in 37 CFR 1.20(i)(2). This petition lacks item (1) above.

The statement of delay is not acceptable. In this regard, petitioner's attention is directed to 37 CFR 1.33(b), which states.

> (b) Amendments and other papers. Amendments and other papers, except for written assertions pursuant to § 1.27(c)(2)(ii) of this part, filed in the application must be signed by:
> (1) A registered patent attorney or patent agent of record appointed in compliance with § 1.32(b);
> (2) A registered patent attorney or patent agent not of record who acts in a representative capacity under the provisions of § 1.34;
> (3) An assignee as provided for under §3.71(b) of this chapter; or
> (4) All of the applicants (§ 1.41(b)) for patent, unless there is an assignee of the entire interest and such assignee has taken action in the application in accordance with § 3.71 of this chapter.

An unsigned amendment (or other paper) or one not properly signed by a person having authority to prosecute the application is not entered. This applies, for instance, where the amendment (or

other paper) is signed by only one of two applicants and the one signing has not been given a power of attorney by the other applicant.

Therefore, as the petition is not signed by all the inventors and the record herein fails to disclose that petitioner herein (Sherlon Arleigh Nelson) was ever given a power of attorney to act on behalf of inventors Sherwin Arlon Nelson and Neville Adolphus Nelson, or that he is an assignee of the entire interest and has complied with the provisions of 37 CFR 3.73(b), the petition is considered to not contain a proper statement of unintentional delay.

Any petition for reconsideration of this decision must be accompanied by the petition fee of $400 as set forth in 37 CFR 1.17(f). The petition for reconsideration must include the lacking item(s) noted below, since, after a decision on the petition for reconsideration, no further reconsideration or review of the matter will be undertaken by the Director.

If reconsideration of this decision is desired, a petition for reconsideration under 37 CFR 1.378(e) must be filed within TWO (2) MONTHS from the mail date of this decision. No extension of this two-month time limit can be granted under 37 CFR 1.136(a) or (b). This is **not** a final agency action within the meaning of 5 U.S.C. § 704.

Further correspondence with respect to this matter should be addressed as follows:

By Mail: Mail Stop PETITION
Commissioner for Patents
Post Office Box 1450
Alexandria, VA 22313-1450

By hand: U. S. Patent and Trademark Office
Customer Service Window, Mail Stop Petitions
Randolph Building
401 Dulany Street
Alexandria, VA 22314

The centralized facsimile number is (571) 273-8300.

Telephone inquiries concerning this decision should be directed to the undersigned at (571) 272-6735.

/Diane C. Goodwyn/
Diane C. Goodwyn
Petitions Examiner
Office of Petitions

UNITED STATES PATENT AND TRADEMARK OFFICE

Commissioner for Patents
United States Patent and Trademark Office
P.O. Box 1450
Alexandria, VA 22313-1450
www.uspto.gov

**SHERLON ARLEIGH NELSON**
**6 TANGLEWOOD PLACE EAST**
**MONROE TOWNSHIP NJ 08831**

**MAILED**
MAY 02 2011
**OFFICE OF PETITIONS**

| | | |
|---|---|---|
| In re Patent No. 7,032,275 | : | |
| Issue Date: April 25, 2006 | : | |
| Application No. 10/410,034 | : | ON PETITION |
| Filed: April 8, 2003 | : | |
| Attorney Docket No. | : | |

This is a decision on the renewed petition under 37 CFR 1.378(c), filed March 15, 2011, to accept the delayed payment of a maintenance fee for the above-identified patent.

The petition is **GRANTED**.

This patent expired on April 25, 2010, for failure to pay the three and one-half year maintenance fee. Since this petition was submitted within twenty-four months after the six-month grace period provided in 37 CFR 1.362(e), the petition was timely filed under the provisions of 37 CFR 1.378(c).

The maintenance fee is hereby accepted and the above-identified patent is reinstated as of the mail date of this decision.

Telephone inquiries concerning this decision should be directed to the undersigned at (571) 272-6735.

The patent file is being forwarded to Files Repository.

/Diane C. Goodwyn/
Diane C. Goodwyn
Petitions Examiner
Office of Petitions

UNITED STATES PATENT AND TRADEMARK OFFICE

Commissioner for Patents
United States Patent and Trademark Office
P.O. Box 1450
Alexandria, VA 22313-1450
www.uspto.gov

CONNOLLY BOVE LODGE & HUTZ LLP
1875 EYE STREET, N.W.
SUITE 1100
WASHINGTON DC 20006

MAILED
MAY 16 2011
OFFICE OF PETITIONS

In re Patent No. 6,871,438 :
Issue Date: March 29, 2005 :
Application No. 10/410,171 : ON PETITION
Filed: April 10, 2003 :
Patentee(s): Albert J. Lawless :

This is a decision on the petition under 37 CFR 1.378(c), filed on March 31, 2011[1], to accept the delayed payment of a maintenance fee for the above-identified patent.

Since petitioner has demonstrated to the satisfaction of the Commissioner that the delay in timely paying the maintenance fee was unintentional, the petition under 37 CFR 1.378(c) is hereby **GRANTED**.

The maintenance fee is hereby accepted and the above-identified patent is reinstated as of the mail date of this decision.

A courtesy copy of this decision is being mailed to the address given in the present petition. However, petitioner will not receive future correspondence, which may be mailed, regarding maintenance fees for the above-identified patent, unless a "Fee Address Indication" form and/or a "Request for Customer Number" form(s) is submitted (See USPTO Website for forms PTO/SB/47 and/or PTO/SB/125).

This patented file is being forwarded to Files Repository.

Telephone inquiries should be directed to the undersigned at (571) 272-3226.

Andrea Smith
Petitions Examiner
Office of Petitions

cc: Albert Lawless
P.O. Box 3764
Boulder, CO 80307

[1] The present petition contains a Certificate of Mailing under 37 CFR 1.8 dated March 28, 2011; therefore, this petition is considered as timely filed under 37 CFR 1.378(c).

## SPE RESPONSE FOR CERTIFICATE OF CORRECTION

Paper No.: _____

DATE : 9/11/08

TO SPE OF : ART UNIT 3762 Sykes, Angela (Spe)

SUBJECT : Request for Certificate of Correction for Appl. No.: 10/410526 Patent No.: 7234831

Please respond to this request for a certificate of correction within 7 days.

**FOR IFW FILES:**

Please review the requested changes/corrections as shown in the **COCIN** document(s) in the IFW application image. No new matter should be introduced, nor should the scope or meaning of the claims be changed.

Please complete the response (see below) and forward the completed response to scanning using document code **COCX**.

**FOR PAPER FILES:**

Please review the requested changes/corrections as shown in the attached certificate of correction. Please complete this form (see below) and forward it with the file to:

**Certificates of Correction Branch (CofC)**
**South Tower - 9A22**
**Palm Location 7580**

Certificates of Correction Branch

**703-308-9390 ext. _____**

**Thank You For Your Assistance**

**The request for issuing the above-identified correction(s) is hereby:**
Note your decision on the appropriate box.

- [X] **Approved** — **All** changes apply.
- [ ] **Approved in Part** — Specify below which changes **do not** apply.
- [ ] **Denied** — State the reasons for denial below.

**Comments:** _____

/Niketa Patel/
**SPE**

3762
**Art Unit**

UNITED STATES PATENT AND TRADEMARK OFFICE

Commissioner for Patents
United States Patent and Trademark Office
P.O. Box 1450
Alexandria, VA 22313-1450
www.uspto.gov

MAILED
OCT 26 2010
OFFICE OF PETITIONS

LEONARD TACHNER, A PROFESSIONAL LAW CORPORATION
17961 SKY PARK CIRCLE, SUITE 38-E
IRVINE CA 92614

In re Application of :
Wang :
Application No. 10/411,007 : DECISION ON PETITION
Filed: April 9, 2003 :
Attorney Docket No. :
FP03006

This is a decision on the petition under the unintentional provisions of 37 CFR 1.137(b), filed July 1, 2010, to revive the above-identified application.

The petition is **DISMISSED.**

Any request for reconsideration of this decision must be submitted within TWO (2) MONTHS from the mail date of this decision. Extensions of time under 37 CFR 1.136(a) are permitted. The reconsideration request should include a cover letter entitled "Renewed Petition under 37 CFR 1.137(b)." This is **not** a final agency action within the meaning of 5 U.S.C. § 704.

This above-identified application became abandoned for failure to timely file a reply to a non-final Office Action mailed October 4, 2006. The non-final Office Action set a three (3) month shortened statutory period for reply. No extensions of time were obtained under the provisions of 37 CFR 1.136(a). Accordingly, this application became abandoned on January 5, 2007. A Notice of Abandonment was mailed on May 11, 2007.

A grantable petition under 37 CFR 1.137(b) must be accompanied by: (1) the required reply, unless previously filed; (2) the petition fee as set forth in 37 CFR 1.17(m); (3) a statement that the entire delay in filing the required reply from the due date for the reply until the filing of a grantable petition pursuant to 37 CFR 1.137(b) was unintentional; and (4) any terminal disclaimer (and fee as set forth in 37 CFR 1.20(d)) required by 37 CFR 1.137(d). Where there is a question as to whether either

the abandonment or the delay in filing a petition under 37 CFR 1.137 was unintentional, the Director may require additional information. *See* MPEP 711.03(c)(II)(C) and (D). The instant petition lacks item (3).

There are three periods to be considered during the evaluation of a petition under 37 CFR 1.137(b):

(1) the delay in reply that originally resulted in the abandonment;

(2) the delay in filing an initial petition pursuant to 37 CFR 1.137(b) to revive the application; and

(3) the delay in filing a grantable petition pursuant to 37 CFR 1.137(b) to revive the application.

Currently, the delay has not been shown to the satisfaction of the Director to be unintentional for periods (1) and (2).

As to Period (1):

The patent statute at 35 U.S.C. § 41(a)(7) authorizes the Director to revive an "unintentionally abandoned application." The legislative history of Public Law 97-247 reveals that the purpose of 35 U.S.C. § 41(a)(7) is to permit the Office to have more discretion than in 35 U.S.C. §§ 133 or 151 to revive abandoned applications in appropriate circumstances, but places a limit on this discretion, stating that "[u]nder this section a petition accompanied by either a fee of $500 or a fee of $50 **would not be granted where the abandonment** or the failure to pay the fee for issuing the patent **was intentional** as opposed to being unintentional or unavoidable." [emphasis added]. See H.R. Rep. No. 542, 97th Cong., 2d Sess. 6-7 (1982), *reprinted in* 1982 U.S.C.C.A.N. 770-71. The revival of an intentionally abandoned application is antithetical to the meaning and intent of the statute and regulation.

35 U.S.C. § 41(a)(7) authorizes the Director to accept a petition "for the revival of an unintentionally abandoned application for a patent.". As amended December 1, 1997, 37 CFR 1.137(b)(3) provides that a petition under 37 CFR 1.137(b) must be accompanied by a statement that the delay was unintentional, but provides that "[t]he Commissioner may require additional information where there is a question whether the delay was unintentional." Where, as here, there is a question whether the initial delay was unintentional, the petitioner must meet the burden of establishing that the delay was unintentional within

the meaning of 35 U.S.C. § 41(a)(7) and 37 CFR 1.137(b). *See* In re Application of G, 11 USPQ2d 1378, 1380 (Comm'r Pats. 1989); 37 CFR 1.137(b). Here, in view of the inordinate delay (almost six years) in resuming prosecution, there is a question whether the entire delay was unintentional. Petitioner should note that the issue is not whether some of the delay was unintentional by any party; rather, the issue is whether the entire delay has been shown to the satisfaction of the Director to be unintentional.

The question under 37 CFR 1.137(b) for period (1) is whether the delay on the part of the party having the right or authority to reply to avoid abandonment (or not reply) was unintentional. Accordingly, any renewed petition must clearly identify the party having the right to reply to avoid abandonment on January 5, 2007. That party, in turn must explain what effort(s) was made to further reply to the outstanding Office action and, further, why no reply was filed. If no effort was made to further reply, then that party must explain why the delay in this application does not result from a deliberate course of action (or inaction). Likewise, as Leonard Tachner was counsel at the time of abandonment, an explanation why this application became abandoned while it was under their control and what efforts attorney Tachner made to reply. Copies of any correspondence relating to the filing, or to not filing a further reply to the outstanding Office action are required from responsible person(s) and whoever else was involved with this application at the time of abandonment. Statements are required from any and all persons having firsthand knowledge of the circumstances surrounding the lack of a reply to the outstanding Office action.

As the courts have made clear, it is pointless for the USPTO to revive a long abandoned application without an adequate showing that the delay did not result from a deliberate course of action. *See* Lawman Armor v. Simon, 2005 U.S. Dist. LEXIS 10843, 74 USPQ2d 1633 (DC EMich 2005); Field Hybrids, LLC v. Toyota Motor Corp., 2005 U.S. Dist. LEXIS 1159 (D. Minn Jan. 27, 2005); Lumenyte Int'l Corp. v. Cable Lite Corp., Nos. 96-1011, 96-1077, 1996 U.S. App. LEXIS 16400, 1996 WL 383927 (Fed. Cir. July 9, 1996) (unpublished) (patents held unenforceable due to a finding of inequitable conduct in submitting an inappropriate statement that the abandonment was unintentional).

As to Period (2):

Likewise, where the applicant deliberately chooses not to seek or persist in seeking the revival of an abandoned application, or where the applicant deliberately chooses to delay seeking the revival of an abandoned application, the resulting delay in

seeking revival of the abandoned application cannot be considered as "unintentional" within the meaning of 37 CFR 1.137(b). *See* MPEP 711.03(c).

The language of both 35 U.S.C. § 41(a)(7) and 37 CFR 1.137(b) are clear and unambiguous, and, furthermore, without qualification. That is, the delay in filing the reply during prosecution, as well as in filing the petition seeking revival, must have been, without qualification, "unintentional" for the reply to now be accepted on petition. The Office requires that the entire delay be at least unintentional as a prerequisite to revival of an abandoned application to prevent abuse and injury to the public. *See* H.R. Rep. No. 542, 97th Cong., 2d Sess. 7 (1982), reprinted in 1982 U.S.C.C.A.N. 771 ("[i]n order to prevent abuse and injury to the public the Commissioner . . . could require applicants to act promptly after becoming aware of the abandonment"). The December 1997 change to 37 CFR 1.137 did not create any new right to overcome an intentional delay in seeking revival, or in renewing an attempt at seeking revival, of an abandoned application. *See* Changes to Patent Practice and Procedure; Final Rule Notice, 62 Fed. Reg. 53131, 53160 (October 10, 1997), 1203 Off. Gaz. Pat. Office 63, 87 (October 21, 1997), which clearly stated that any protracted delay (here, over 3 years) could trigger, as here, a request for additional information. As the courts have since made clear, a protracted delay in seeking revival, as here, requires a petitioner's detailed explanation seeking to excuse the delay as opposed to USPTO acceptance of a general allegation of unintentional delay. *See* Lawman Armor v. Simon, 2005 U.S. Dist. LEXIS 10843, 74 USPQ2d 1633, at 1637-8 (DC EMich 2005); Field Hybrids, LLC v. Toyota Motor Corp., 2005 U.S. Dist. LEXIS 1159 (D. Minn Jan. 27, 2005) at *21-*23. Statements are required from any and all persons having firsthand knowledge of the circumstances surrounding the protracted delay, after the abandonment date, in seeking revival.

As noted in MPEP 711.03(c)(II), subsection D, in instances in which such petition was not filed within 1 year of the date of abandonment of the application, applicants should include:

> (A) the date that the applicant first became aware of the abandonment of the application; and
> (B) a showing as to how the delay in discovering the abandoned status of the application occurred despite the exercise of due care or diligence on the part of the applicant.

In either instance, applicant's failure to carry the burden of proof to establish that the "entire" delay was "unavoidable" or "unintentional" may lead to the denial of a petition under 37 CFR 1.137(b), regardless of the circumstances that originally

resulted in the abandonment of the application. *See also* New York University v. Autodesk, 2007 U.S. DIST LEXIS, U.S.District LEXIS 50832, *10 -*12 (S.D.N.Y. 2007)(protracted delay in seeking revival undercuts assertion of unintentional delay).

Any renewed petition may be addressed as follows:

By Mail: Mail Stop PETITION
Commissioner for Patents
P. O. Box 1450
Alexandria, VA 22313-1450

By hand: U. S. Patent and Trademark Office
Customer Service Window, Mail Stop Petitions
Randolph Building
401 Dulany Street
Alexandria, VA 22314

The centralized facsimile number is **(571) 273-8300.**

Correspondence regarding this decision may also be filed through the electronic filing system of the USPTO.

Telephone inquiries concerning this decision should be directed to the undersigned at (571) 272-3215.

Charlema Grant
Petitions Attorney
Office of Petitions

UNITED STATES PATENT AND TRADEMARK OFFICE

Commissioner for Patents
United States Patent and Trademark Office
P.O. Box 1450
Alexandria, VA 22313-1450
www.uspto.gov

MAILED
AUG 10 2011
OFFICE OF PETITIONS

**LEYDIG VOIT & MAYER, LTD**
**TWO PRUDENTIAL PLAZA, SUITE 4900**
**180 NORTH STETSON AVENUE**
**CHICAGO IL 60601-6731**

| | | |
|---|---|---|
| In re Patent No. 7,265,084 | : | |
| Issue Date: September 4, 2007 | : | |
| Application No. 10/411,012 | : | NOTICE |
| Filed: April 9, 2003 | : | |
| Attorney Docket No. 705724 | : | |

This is a notice regarding your request for acceptance of a fee deficiency submission under 37 CFR 1.28 submitted on June 2, 2011.

The Office no longer investigates or rejects original or reissue patent under 37 CFR 1.56. **1098 Off. Gaz. Pat. Office 502 (January 3, 1989)**. Therefore, nothing in this Notice is intended to imply that an investigation was done.

Your fee deficiency submission under 37 CFR 1.28 is hereby **ACCEPTED**.

This patent is no longer entitled to small entity status. Accordingly, all future fees paid in this patent must be paid at the large entity rate.

There is no indication that the person signing the request was ever given a power of attorney to prosecute the application. If the person signing the request desires to receive future correspondence regarding this patent, the appropriate power of attorney documents must be submitted. While a courtesy copy of this decision is being mailed to the person signing the request, all future correspondence will be directed to the address currently of record until appropriate instructions are received.

Inquiries related to this communication should be directed to the undersigned at (571) 272-3208.

/KOC/
Karen Creasy
Petitions Examiner
Office of Petitions

Cc:

**KENDAL M. SHEETS**
**CPA GLOBAL**
**2318 MILL ROAD, SUITE 12 FLOOR**
**ALEXANDRIA, VA 22314**

UNITED STATES PATENT AND TRADEMARK OFFICE

Commissioner for Patents
United States Patent and Trademark Office
P.O. Box 1450
Alexandria, VA 22313-1450
www.uspto.gov

MAILED
JUN 10 2011
OFFICE OF PETITIONS

NOVO NORDISK INC
INTELLECTUAL PROPERTY DEPARTMENT
100 COLLEGE ROAD WEST
PRINCETON NJ 08540

| | |
|---|---|
| In re Application | : |
| DeFrees, et al. | : DECISION ON APPLICATION FOR |
| Application No. 10/411,044 | : PATENT TERM ADJUSTMENT |
| Filed: April 9, 2003 | : |
| Attorney Docket No. 7943.400-US | : |
| | : |

This letter is in response to the "APPLICATION FOR PATENT TERM ADJUSTMENT FOR PATENT APPLICATION UNDER 37 C.F.R. § 1.705(d)", filed April 13, 2011, which is being treated as an application for patent term adjustment under 37 CFR 1.705(b). Applicants request that the initial determination of patent term adjustment under 35 U.S.C. 154(b) be corrected from five hundred eighty-two (582) days to one thousand two hundred eight (1208) days.

The application for patent term adjustment is **GRANTED to the extent indicated herein.**

On March 30, 2011, the Office mailed the Determination of Patent Term Adjustment under 35 U.S.C. 154(b) in the above identified application. The Notice stated that the patent term adjustment (PTA) to date is five hundred eighty-two (582) days. On April 13, 2011, Applicants timely[1] submitted an application for patent term adjustment, asserting that the correct number of days of PTA at the time of the mailing of the Notice of Allowance is one thousand two hundred eight (1208) days.

Applicants state that the patent issuing from the application is not subject to a terminal disclaimer.

[1] Applicants filed the application for patent term adjustment on the same date as the issue fee.

The Office initially determined a patent term adjustment of five hundred eighty-two (582) days based on an adjustment for PTO delay of four hundred seventy-six (476) days pursuant to 37 C.F.R. § 1.703(a)(1) and one hundred ninety-three (193) and seven (7) days pursuant to 37 CFR 1.703(a)(2), reduced by ninety-four (94) days of Applicant delay under 35 CFR 1.704(b). The 476 days of PTO delay are at issue.

Applicants argue that the adjustment under 37 CFR 1.703(a)(1) should have stopped when the USPTO mailed a new Restriction Requirement on March 20, 2008, not when the USPTO mailed an earlier Restriction Requirement on September 28, 2005. Applicants' argument has been considered, but is not persuasive.

The fact that subsequent to mailing the September 28, 2005 Restriction Requirement, the USPTO mailed a decision withdrawing the holding of abandonment and a new Restriction Requirement on March 20, 2008, does not warrant treating September 28, 2005 Restriction Requirement as void *ab initio* and as if the USPTO had never issued the Office action. The USPTO appreciates that there may be situations in which it is appropriate to treat an Office action or notice issued in an application as void *ab initio* and as if the USPTO had never issued the Office action. However, these would be extremely rare situations, such as the issuance of an Office action or notice by an employee who does not have the authority to issue that type of Office action or notice, the issuance of an Office action or notice in the wrong application, or the issuance of an Office action or notice containing language not appropriate for inclusion in an official document. In essence, the situations in which it is appropriate to treat an Office action or notice issued in an application as void *ab initio* and as if the USPTO had never issued the Office action are the situations in which it is appropriate to expunge an Office action or notice from the USPTO's record of the application. That is simply not the case here.

Pursuant to 35 U.S.C. § 154(b)(1)(A)(i), patentees are entitled to day-to-day adjustment if the USPTO delays the mailing of an action under 35 U.S.C. § 132 or a Notice of Allowance within fourteen months from the filing date of the application. The record of the instant application indisputably indicates that the USPTO entered an action under 35 U.S.C. § 132, specifically a Restriction Requirement, on September 28, 2005, 476 days after the 14 months in which the USPTO had to mail such an action. The fact that the Office withdrew the holding of abandonment and mailed a new Restriction Requirement on March 20, 2008 does not negate the fact that the Office responded within the meaning of 35 U.S.C. § 154(b)(1)(A)(i) and 37 CFR 1.703(a)(1) on September 28, 2005. Unless expunged from the record (which is not warranted in this situation), for purposes of calculating patent term adjustment, the Office action entered by the examiner on September 28, 2005, was properly used to determine whether the USPTO delayed the issuance of the instant application by mailing an action under 35 U.S.C. § 132 or a Notice of Allowance within fourteen months from the filing date of the application. *See Changes to Implement Patent Term Adjustment under Twenty-Year Patent Term*, 65 Fed. Reg. 54366 (Sept. 18, 2000) (final rule).

Applicants also point out that they should have been assessed additional applicant delay for three instances under 37 CFR 1.704(c)(8). Applicants filed a "Letter to Examiner and Statement of Relatedness" on April 2, 2009, subsequent to filing an Amendment on February 23, 2009. Accordingly, thirty-eight (38) days should have been assessed pursuant to 37 CFR 1.704(c)(8) for filing this supplemental paper. In addition, Applicants filed a "Letter to Examiner" on August 18, 2009, subsequent to filing an Amendment on August 11, 2009. As such, seven (7) days of Applicant delay should have been assessed for the filing of this supplemental paper. Lastly, Applicants filed an IDS on February 15, 2011, subsequent to their filing of an RCE on January 6, 2011. Accordingly, forty (40) days of Applicant delay should have been assessed for the filing of this supplemental IDS. The Office thanks Applicant for their candor and good faith in bringing these instances of Applicant delay to the Office's attention.

Further review by the Office reveals that Applicants filed RCEs on five separate occasions in response to Notices of Allowance, and as such, Applicants should have been assessed Applicant delay for each of these instances pursuant to 37 CFR 1.704(c)(10). 37 CFR 1.704(c)(10) states that it shall be a failure to engage in reasonable efforts to conclude prosecution of an application for:

> Submission of an amendment under § 1.312 or other paper after a notice of allowance has been given or mailed, in which case the period of adjustment set forth in § 1.703 shall be reduced by the lesser of:
>
> (i) The number of days, if any, beginning on the date the amendment under § 1.312 or other paper was filed and ending on the mailing date of the Office action or notice in response to the amendment under § 1.312 or such other paper; or
>
> (ii) Four months;

Applicants first filed an RCE subsequent to the mailing of a Notice of Allowance on November 19, 2009. The Office mailed a Notice of Allowance in response to this RCE on March 26, 2010. Accordingly, one hundred twenty-eight (128) days of Applicant delay should have been assessed. In response to this Notice of Allowance, Applicants filed an RCE on April 26, 2010, to which the Office responded by mailing a Notice of Allowance on May 24, 2010. Accordingly, twenty-nine (29) days of Applicant delay should have been assessed. Applicants again filed an RCE on June 24, 2010, to which the Office responded by mailing a Notice of Allowance on October 6, 2010. One hundred five (105) days of Applicant delay should have been assessed for filing this RCE. Applicants filed another RCE on January 6, 2011, to which the Office responded with a new Notice of Allowance on February 17, 2011. Forty-three (43) days of Applicant delay should have been assessed for the filing of this RCE. Lastly, Applicants filed an RCE on March 1, 2011, to which the Office responded by mailing a Notice of Allowance on March 30, 2011. Thirty (30) days of Applicant delay should have been assessed under 37 CFR 1.704(c)(10) for filing this RCE.

In view thereof, the correct determination of patent term adjustment at the time of the mailing of the Notice of Allowance is **one hundred sixty-two (162)** days (676 (476+193+7) days of PTO delay, reduced by 514 (94+38+7+128+29+105+43+40+30) days of applicant delay).

Receipt of the $200.00 fee set forth in 37 CFR 1.18(e) is acknowledged.

The application file is being forwarded to the Office of Data Management for processing into a patent.

Telephone inquiries specific to this matter should be directed to Cliff Congo, Petitions Attorney, at (571)272-3207.

Anthony Knight
Director
Office of Petitions

Enc: copy of PAIR screen

# Patent Term Adjustments

PTA/PTE Information | Patent Term Adjustment | Patent Term Extension

Application Number*: 10411044 Search | Explanation of PTA Calculation | Explanation of PTE Calculation

## PTA Calculations for Application: 10411044

| | |
|---|---|
| Application Filing Date 04/09/2003 | OverLapping Days Between (A and B) or (A and C) 0 |
| Issue Date of Patent | Non-Overlapping USPTO Delays: 676 |
| A Delays 676 | PTO Manual Adjustment -420 |
| B Delays 0 | Applicant Delay (APPL) 94 |
| C Delays 0 | Total PTA (days) 162 |

* - Sorted Column

## File Contents History

| Action Number | Action Recorded Date | Action Due Date | Action Code | Action Description | Duration PTO | Duration APPL | Parent Action Number |
|---|---|---|---|---|---|---|---|
| 231 | 06/08/2011 | | P028 | Adjustment of PTA Calculation by PTO | | 199 | 0 |
| 230 | 06/08/2011 | | P028 | Adjustment of PTA Calculation by PTO | | 320 | 0 |
| 221 | 03/30/2011 | | MN/=. | Mail Notice of Allowance | | | 0 |
| 220 | 03/25/2011 | | OAR | Office Action Review | | | 0 |
| 219 | 03/25/2011 | | OAR | Office Action Review | | | 0 |
| 218 | 03/25/2011 | | IREV | Issue Revision Completed | | | 0 |
| 217 | 03/25/2011 | | DVER | Document Verification | | | 0 |
| 216 | 03/25/2011 | | N/=. | Notice of Allowance Data Verification Completed | | | 0 |
| 215 | 03/24/2011 | | EX.R | Reasons for Allowance | | | 0 |
| 214 | 03/24/2011 | | CNTA | Allowability Notice | | | 0 |
| 208 | 03/04/2011 | | CRFT | Sequence Forwarded to Pubs on Tape | | | 0 |
| 203 | 03/02/2011 | | ABN9 | Disposal for a RCE / CPA / R129 | | | 0 |
| 213 | 03/01/2011 | | IDSC | Information Disclosure Statement considered | | | 0 |
| 210 | 03/01/2011 | | IDSC | Information Disclosure Statement considered | | | 0 |
| 207 | 03/01/2011 | | WIDS | Information Disclosure Statement (IDS) Filed | | | 0 |
| 206 | 03/01/2011 | | RCAP | Reference capture on IDS | | | 0 |
| 205 | 03/01/2011 | | M844 | Information Disclosure Statement (IDS) Filed | | | 0 |
| 204 | 03/01/2011 | | RCEX | Request for Continued Examination (RCE) | | | 0 |
| 202 | 03/01/2011 | | WIDS | Information Disclosure Statement (IDS) Filed | | | 0 |
| 201 | 03/01/2011 | | BRCE | Workflow - Request for RCE - Begin | | | 0 |
| 200 | 02/28/2011 | | EML_NTR | Email Notification | | | 0 |
| 198 | 02/28/2011 | | MM327 | Mail Miscellaneous Communication to Applicant | | | 0 |
| 197 | 02/24/2011 | | M327 | Miscellaneous Communication to Applicant - No Action Count | | | 0 |
| 195 | 02/18/2011 | | EIDC | Export to Initial Data Capture | | | 0 |
| 193 | 02/17/2011 | | ELC_RVW | Electronic Review | | | 0 |
| 192 | 02/17/2011 | | EML_NTF | Email Notification | | | 0 |
| 190 | 02/17/2011 | | MN/=. | Mail Notice of Allowance | | | 0 |
| 199 | 02/15/2011 | | IDSC | Information Disclosure Statement considered | | | 0 |
| 196 | 02/15/2011 | | IDSC | Information Disclosure Statement considered | | | 0 |
| 194 | 02/15/2011 | | WIDS | Information Disclosure Statement (IDS) Filed | | | 0 |
| 191 | 02/15/2011 | | WIDS | Information Disclosure Statement (IDS) Filed | | | 0 |
| 189 | 02/14/2011 | | IREV | Issue Revision Completed | | | 0 |
| 188 | 02/14/2011 | | N/=. | Notice of Allowance Data Verification Completed | | | 0 |
| 187 | 02/14/2011 | | DOCK | Case Docketed to Examiner in GAU | | | 0 |
| 186 | 01/31/2011 | | ACRE | Allowed Case Returned to the Examiner for Clerical Processing | | | 0 |
| 185 | 01/31/2011 | | DVER | Document Verification | | | 0 |
| 184 | 01/31/2011 | | CNTA | Allowability Notice | | | 0 |
| 174 | 01/07/2011 | | ABN9 | Disposal for a RCE / CPA / R129 | | | 0 |
| 179 | 01/06/2011 | | IDSC | Information Disclosure Statement considered | | | 0 |
| 178 | 01/06/2011 | | WIDS | Information Disclosure Statement (IDS) Filed | | | 0 |
| 177 | 01/06/2011 | | RCAP | Reference capture on IDS | | | 0 |
| 176 | 01/06/2011 | | M844 | Information Disclosure Statement (IDS) Filed | | | 0 |
| 175 | 01/06/2011 | | RCEX | Request for Continued Examination (RCE) | | | 0 |
| 173 | 01/06/2011 | | BRCE | Workflow - Request for RCE - Begin | | | 0 |
| 172 | 10/27/2010 | | CRFT | Sequence Forwarded to Pubs on Tape | | | 0 |
| 171 | 10/12/2010 | | EIDC | Export to Initial Data Capture | | | 0 |
| 170 | 10/06/2010 | | ELC_RVW | Electronic Review | | | 0 |
| 169 | 10/06/2010 | | EML_NTF | Email Notification | | | 0 |
| 168 | 10/06/2010 | | MN/=. | Mail Notice of Allowance | | | 0 |
| 167 | 09/30/2010 | | IREV | Issue Revision Completed | | | 0 |
| 166 | 09/30/2010 | | DVER | Document Verification | | | 0 |
| 165 | 09/30/2010 | | N/=. | Notice of Allowance Data Verification Completed | | | 0 |
| 164 | 09/27/2010 | | CNTA | Allowability Notice | | | 0 |
| 155 | 06/28/2010 | | ABN9 | Disposal for a RCE / CPA / R129 | | | 0 |
| 163 | 06/24/2010 | | IDSC | Information Disclosure Statement considered | | | 0 |
| 159 | 06/24/2010 | | IDSC | Information Disclosure Statement considered | | | 0 |
| 157 | 06/24/2010 | | WIDS | Information Disclosure Statement (IDS) Filed | | | 0 |
| 156 | 06/24/2010 | | RCEX | Request for Continued Examination (RCE) | | | 0 |
| 153 | 06/24/2010 | | WIDS | Information Disclosure Statement (IDS) Filed | | | 0 |
| 152 | 06/24/2010 | | BRCE | Workflow - Request for RCE - Begin | | | 0 |
| 151 | 06/08/2010 | | CRFT | Sequence Forwarded to Pubs on Tape | | | 0 |
| 150 | 05/25/2010 | | EIDC | Export to Initial Data Capture | | | 0 |
| 149 | 05/24/2010 | | ELC_RVW | Electronic Review | | | 0 |
| 148 | 05/24/2010 | | EML_NTF | Email Notification | | | 0 |
| 147 | 05/24/2010 | | MN/=. | Mail Notice of Allowance | | | 0 |
| 146 | 05/18/2010 | | IREV | Issue Revision Completed | | | 0 |
| 145 | 05/18/2010 | | DVER | Document Verification | | | 0 |
| 144 | 05/18/2010 | | N/=. | Notice of Allowance Data Verification Completed | | | 0 |
| 143 | 05/18/2010 | | CNTA | Allowability Notice | | | 0 |
| 137 | 04/28/2010 | | ABN9 | Disposal for a RCE / CPA / R129 | | | 0 |
| 142 | 04/26/2010 | | IDSC | Information Disclosure Statement considered | | | 0 |
| 141 | 04/26/2010 | | WIDS | Information Disclosure Statement (IDS) Filed | | | 0 |
| 140 | 04/26/2010 | | RCAP | Reference capture on IDS | | | 0 |
| 139 | 04/26/2010 | | M844 | Information Disclosure Statement (IDS) Filed | | | 0 |
| 138 | 04/26/2010 | | RCEX | Request for Continued Examination (RCE) | | | 0 |
| 135 | 04/26/2010 | | BRCE | Workflow - Request for RCE - Begin | | | 0 |
| 134 | 04/13/2010 | | CRFT | Sequence Forwarded to Pubs on Tape | | | 0 |
| 133 | 03/30/2010 | | EIDC | Export to Initial Data Capture | | | 0 |
| 132 | 03/26/2010 | | ELC_RVW | Electronic Review | | | 0 |
| 131 | 03/26/2010 | | EML_NTF | Email Notification | | | 0 |
| 130 | 03/26/2010 | 03/19/2010 | MN/=. | Mail Notice of Allowance | 2 | | 110 |
| 129 | 03/24/2010 | | IREV | Issue Revision Completed | | | 0 |
| 128 | 03/18/2010 | | ACRE | Allowed Case Returned to the Examiner for Clerical Processing | | | 0 |
| 127 | 03/18/2010 | | DVER | Document Verification | | | 0 |
| 126 | 03/18/2010 | | N/=. | Notice of Allowance Data Verification Completed | | | 0 |
| 125 | 03/15/2010 | | CNTA | Allowability Notice | | | 0 |
| 123 | 01/22/2010 | | EML_NTR | Email Notification | | | 0 |
| 122 | 01/22/2010 | | PG-ISSUE | PG-Pub Issue Notification | | | 0 |
| 121 | 12/31/2009 | | FIDC | Finished Initial Data Capture | | | 0 |
| 117 | 12/04/2009 | | ABN9 | Disposal for a RCE / CPA / R129 | | | 0 |

| | | | | | | | |
|---|---|---|---|---|---|---|---|
| 124 | 11/19/2009 | | IDSC | Information Disclosure Statement considered | | | 0 |
| 120 | 11/19/2009 | | RCAP | Reference capture on IDS | | | 0 |
| 119 | 11/19/2009 | | M844 | Information Disclosure Statement (IDS) Filed | | | 0 |
| 118 | 11/19/2009 | | RCEX | Request for Continued Examination (RCE) | | | 0 |
| 116 | 11/19/2009 | | WIDS | Information Disclosure Statement (IDS) Filed | | | 0 |
| 115 | 11/19/2009 | | BRCE | Workflow - Request for RCE - Begin | | | 0 |
| 114 | 10/30/2009 | | A.NA | Amendment after Notice of Allowance (Rule 312) | | | 0 |
| 113 | 10/22/2009 | | CRFT | Sequence Forwarded to Pubs on Tape | | | 0 |
| 112 | 10/19/2009 | | PA.. | Change in Power of Attorney (May Include Associate POA) | | | 0 |
| 111 | 10/16/2009 | | C.AD | Correspondence Address Change | | | 0 |
| 109 | 10/01/2009 | | PG-PB-DT | PG-Pub notice of new or Revised projected publication date | | | 0 |
| 110 | 09/29/2009 | | EIDC | Export to Initial Data Capture | | | 0 |
| 107 | 09/25/2009 | | MEX.A | Mail Examiner's Amendment | | | 0 |
| 106 | 09/25/2009 | | MN/=. | Mail Notice of Allowance | | | 0 |
| 105 | 09/24/2009 | | N/=. | Notice of Allowance Data Verification Completed | | | 0 |
| 104 | 09/24/2009 | | DOCK | Case Docketed to Examiner in GAU | | | 0 |
| 103 | 09/24/2009 | | L130 | Receipt of all Acknowledgement Letters | | | 0 |
| 102 | 09/23/2009 | | IREV | Issue Revision Completed | | | 0 |
| 101 | 09/23/2009 | | DVER | Document Verification | | | 0 |
| 100 | 09/21/2009 | | EX.A | Examiner's Amendment Communication | | | 0 |
| 99 | 09/21/2009 | | CNTA | Allowability Notice | | | 0 |
| 108 | 08/18/2009 | | LET. | Miscellaneous Incoming Letter | | | 0 |
| 92 | 08/15/2009 | | PS74 | Paralegal TD Accepted | | | 0 |
| 91 | 08/15/2009 | | PS74 | Paralegal TD Accepted | | | 0 |
| 90 | 08/15/2009 | | PS74 | Paralegal TD Accepted | | | 0 |
| 89 | 08/15/2009 | | PS74 | Paralegal TD Accepted | | | 0 |
| 88 | 08/15/2009 | | PS74 | Paralegal TD Accepted | | | 0 |
| 81 | 08/12/2009 | | FWDX | Date Forwarded to Examiner | | | 0 |
| 87 | 08/11/2009 | 08/11/2009 | DIST | Terminal Disclaimer Filed | | | 80 |
| 86 | 08/11/2009 | | DIST | Terminal Disclaimer Filed | | | 0 |
| 85 | 08/11/2009 | | DIST | Terminal Disclaimer Filed | | | 0 |
| 84 | 08/11/2009 | | DIST | Terminal Disclaimer Filed | | | 0 |
| 83 | 08/11/2009 | | DIST | Terminal Disclaimer Filed | | | 0 |
| 82 | 08/11/2009 | | AF/D | Affidavit(s) (Rule 131 or 132) or Exhibit(s) Received | | | 0 |
| 80 | 08/11/2009 | | A.NE | Amendment after Final Rejection | | | 0 |
| 96 | 07/17/2009 | | M844 | Information Disclosure Statement (IDS) Filed | | | 0 |
| 78 | 05/11/2009 | | MCTFR | Mail Final Rejection (PTOL-326) | | | 0 |
| 77 | 05/08/2009 | | CTFR | Final Rejection | | | 0 |
| 74 | 04/02/2009 | | LET. | Miscellaneous Incoming Letter | | | 0 |
| 73 | 03/27/2009 | | FWDX | Date Forwarded to Examiner | | | 0 |
| 72 | 02/23/2009 | 11/21/2008 | A... | Response after Non-Final Action | | 24 | 65 |
| 71 | 02/23/2009 | | XT/G | Request for Extension of Time - Granted | | | 0 |
| 75 | 01/23/2009 | | IDSC | Information Disclosure Statement considered | | | 0 |
| 70 | 01/23/2009 | | M844 | Information Disclosure Statement (IDS) Filed | | | 0 |
| 67 | 01/23/2009 | | WIDS | Information Disclosure Statement (IDS) Filed | | | 0 |
| 76 | 01/21/2009 | | IDSC | Information Disclosure Statement considered | | | 0 |
| 69 | 01/21/2009 | | RCAP | Reference capture on IDS | | | 0 |
| 68 | 01/21/2009 | | M844 | Information Disclosure Statement (IDS) Filed | | | 0 |
| 66 | 01/21/2009 | | WIDS | Information Disclosure Statement (IDS) Filed | | | 0 |
| 65 | 08/21/2008 | | MCTNF | Mail Non-Final Rejection | | | 0 |
| 64 | 07/11/2008 | | CTNF | Non-Final Rejection | | | 0 |
| 59 | 05/31/2008 | | FWDX | Date Forwarded to Examiner | | | 0 |
| 58 | 05/20/2008 | | ELC. | Response to Election / Restriction Filed | | | 0 |
| 57 | 05/20/2008 | | XT/G | Request for Extension of Time - Granted | | | 0 |
| 56 | 03/20/2008 | 09/09/2007 | MCTRS | Mail Restriction Requirement | 199 | | 52 |
| 55 | 03/17/2008 | | CTRS | Restriction/Election Requirement | | | 0 |
| 53 | 02/12/2008 | | FWDX | Date Forwarded to Examiner | | | 0 |
| 51 | 07/12/2007 | | MNRAB | Mail Notice of Rescinded Abandonment | | | 0 |
| 50 | 07/12/2007 | | NRAB | Notice of Rescinded Abandonment in TCs | | | 0 |
| 52 | 05/09/2007 | | ELC. | Response to Election / Restriction Filed | | | 0 |
| 48 | 12/04/2006 | | MPREV | Mail-Petition to Revive Application - Granted | | | 0 |
| 47 | 12/04/2006 | | MPTD1 | Mail-Petition Decision - Dismissed | | | 0 |
| 46 | 04/21/2006 | | PET. | Petition Entered | | | 0 |
| 45 | 04/21/2006 | | PET. | Petition Entered | | | 0 |
| 43 | 04/21/2006 | | PFP | petition fee paid | | | 0 |
| 41 | 04/04/2006 | | MABN2 | Mail Abandonment for Failure to Respond to Office Action | | | 0 |
| 40 | 04/03/2006 | | ABN2 | Aband. for Failure to Respond to O. A. | | | 0 |
| 38 | 09/28/2005 | 06/09/2004 | MCTRS | Mail Restriction Requirement | 476 | | 0.5 |
| 37 | 09/26/2005 | | CTRS | Restriction/Election Requirement | | | 0 |
| 36 | 03/25/2005 | | DOCK | Case Docketed to Examiner in GAU | | | 0 |
| 35 | 06/28/2004 | | A.PE | Preliminary Amendment | | | 0 |
| 34 | 06/28/2004 | | WAMD | Workflow incoming amendment IFW | | | 0 |
| 33 | 05/26/2004 | | TSSCOMP | IFW TSS Processing by Tech Center Complete | | | 0 |
| 31 | 05/26/2004 | | DOCK | Case Docketed to Examiner in GAU | | | 0 |
| 39 | 02/27/2004 | | IDSC | Information Disclosure Statement considered | | | 0 |
| 30.7 | 02/27/2004 | | M844 | Information Disclosure Statement (IDS) Filed | | | 0 |
| 30 | 02/27/2004 | | WIDS | Information Disclosure Statement (IDS) Filed | | | 0 |
| 29 | 11/24/2003 | | WRDIPE | Application Return from OIPE | | | 0 |
| 28 | 11/24/2003 | | COMP | Application Is Now Complete | | | 0 |
| 27 | 11/24/2003 | | W/OA | Pre-Exam Office Action Withdrawn | | | 0 |
| 26 | 11/24/2003 | | RDIPE | Application Return TO OIPE | | | 0 |
| 25 | 11/24/2003 | | WRDIPE | Application Return from OIPE | | | 0 |
| 24 | 11/24/2003 | | COMP | Application Is Now Complete | | | 0 |
| 23 | 11/24/2003 | | W/OA | Pre-Exam Office Action Withdrawn | | | 0 |
| 22 | 11/24/2003 | | RDIPE | Application Return TO OIPE | | | 0 |
| 19 | 09/08/2003 | | COMP | Application Is Now Complete | | | 0 |
| 20 | 09/05/2003 | | WRDIPE | Application Return from OIPE | | | 0 |
| 18 | 09/05/2003 | | W/OA | Pre-Exam Office Action Withdrawn | | | 0 |
| 17 | 09/05/2003 | | RDIPE | Application Return TO OIPE | | | 0 |
| 16 | 09/05/2003 | | OIPE | Application Dispatched from OIPE | | | 0 |
| 15 | 09/05/2003 | | COMP | Application Is Now Complete | | | 0 |
| 11 | 08/25/2003 | | L197 | Receipt of Acknowledgment Letter | | | 0 |
| 12 | 07/16/2003 | | A.PE | Preliminary Amendment | | | 0 |
| 14 | 07/16/2003 | | SES | Small Entity Statement (37 CFR 1.27) | | | 0 |
| 13 | 07/16/2003 | | ADDFLFEE | Additional Application Filing Fees | | | 0 |
| 12 | 07/16/2003 | | OATHDECL | A statement by one or more inventors satisfying the requirement under 35 USC 115, Oath of the Applic | | | 0 |
| 21 | 07/02/2003 | | IRFND | Request for Refund | | | 0 |
| 10 | 06/30/2003 | | INCD | Notice Mailed--Application Incomplete--Filing Date Assigned | | | 0 |
| 8 | 05/08/2003 | | L196 | Referred by L&R for Third-Level Security Review. Agency Referral Letter Generated | | | 0 |
| 7 | 05/08/2003 | | L196 | Referred by L&R for Third-Level Security Review. Agency Referral Letter Generated | | | 0 |
| 6 | 05/08/2003 | | L196 | Referred by L&R for Third-Level Security Review. Agency Referral Letter Generated | | | 0 |
| 5 | 05/07/2003 | | SCAN | IFW Scan & PACR Auto Security Review | | | 0 |
| 4 | 04/28/2003 | | CRFE | CRF is Good Technically / Entered Into Database | | | 0 |
| 3 | 04/21/2003 | | SCAN | IFW Scan & PACR Auto Security Review | | | 0 |
| 2 | 04/09/2003 | | CRFL | CRF Disk Has Been Received by Preexam / Group / PCT | | | 0 |
| 1 | 04/09/2003 | | IEXX | Initial Exam Team nn | | | 0 |
| 0.5 | 04/09/2003 | | EFILE | Filing date | | | 0 |

Export to: Excel

PTO/SB/66 (03-09)
Approved for use through 03/31/2012. OMB 0651-0016
U.S. Patent and Trademark Office: U.S. DEPARTMENT OF COMMERCE
Under the Paperwork Reduction Act of 1995, no persons are required to respond to a collection of information unless it displays valid OMB control number.

# PETITION TO ACCEPT UNINTENTIONALLY DELAYED PAYMENT OF MAINTENANCE FEE IN AN EXPIRED PATENT (37 CFR 1.378(c))

| Patent Number | Issue Date (YYYY-MM-DD) | Application Number | Filing Date (YYYY-MM-DD) | Docket Number (if applicable) |
|---|---|---|---|---|
| 6680819 | 2004-01-20 | 10411204 | 2003-04-11 | |

CAUTION: Maintenance fee (and surcharge, if any) payment must correctly identify: (1) the patent number and (2) the application number of the actual U.S. application leading to issuance of that patent to ensure the fee(s) is/are associated with the correct patent. 37 CFR 1.366(c) and (d).

SMALL ENTITY
☐ Patentee claims, or has previously claimed, small entity status. See 37 CFR 1.27.

LOSS OF ENTITLEMENT TO SMALL ENTITY STATUS
☐ Patentee is no longer entitled to small entity status. See 37 CFR 1.27(g)

| NOT Small Entity | | | Small Entity | | |
|---|---|---|---|---|---|
| | Fee | Code | | Fee | Code |
| ○ | 3 ½ year | (1551) | ○ | 3 ½ year | (2551) |
| ● | 7 ½ year | (1552) | ○ | 7 ½ year | (2552) |
| ○ | 11 ½ year | (1553) | ○ | 11 ½ year | (2553) |

SURCHARGE
The surcharge required by 37 CFR 1.20(i)(2) (Fee Code 1558) must be paid as a condition of accepting unintentionally delayed payment of the maintenance fee.

MAINTENANCE FEE (37 CFR 1.20(e)-(g))
The appropriate maintenance fee must be submitted with this petition.

STATEMENT
THE UNDERSIGNED CERTIFIES THAT THE DELAY IN PAYMENT OF THE MAINTENANCE FEE TO THIS PATENT WAS UNINTENTIONAL

PETITIONER(S) REQUEST THAT THE DELAYED PAYMENT OF THE MAINTENANCE FEE BE ACCEPTED AND THE PATENT REINSTATED

THIS PORTION MUST BE COMPLETED BY THE SIGNATORY OR SIGNATORIES

37 CFR 1.378(d) states: "Any petition under this section must be signed by an attorney or agent registered to practice before the Patent and Trademark Office, or by the patentee, the assignee, or other party in interest."

I certify, in accordance with 37 CFR 1.4(d)(4) that I am

- ● An attorney or agent registered to practice before the Patent and Trademark Office
- ○ A sole patentee
- ○ A joint patentee; I certify that I am authorized to sign this submission on behalf of all the other patentees.
- ○ A joint patentee; all of whom are signing this e-petition
- ○ The assignee of record of the entire interest

Under the Paperwork Reduction Act of 1995, no persons are required to respond to a collection of information unless it displays valid OMB control number.

| Patent Practitioner | | | |
|---|---|---|---|
| A signature of the applicant or representative is required in accordance with 37 CFR 1.33 and 10.18. Please see 37 CFR 1.4(d) for the form of the signature | | | |
| Signature | /Marvin Motsenbocker/ | Date (YYYY-MM-DD) | 2012-03-23 |
| Name | Marvin A. Motsenbocker | Registration Number | 36614 |

This collection of information is required by 37 CFR 1.378(c). The information is required to obtain or retain a benefit by the public which is to file (and by the USPTO to process) an application. Confidentiality is governed by 35 U.S.C. 122 and 37 CFR 1.11 and 1.14. This collection is estimated to take 1 hour to complete, including gathering, preparing, and submitting the completed application form to the USPTO. Time will vary depending upon the individual case. Any comments on the amount of time you require to complete this form and/ or suggestions for reducing this burden, should be sent to the Chief Information Officer, U.S. Patent and Trademark Office, U.S. Department of Commerce, P.O. Box 1450, Alexandria, VA 22313-1450. DO NOT SEND FEES OR COMPLETED FORMS TO THIS ADDRESS. **This form can only be used when in conjunction with EFS-Web. If this form is mailed to the USPTO, it may cause delays in reinstating the patent.**

# Privacy Act Statement

The Privacy Act of 1974 (P.L. 93-579) requires that you be given certain information in connection with your submission of the attached form related to a patent application or patent. Accordingly, pursuant to the requirements of the Act, please be advised that: (1) the general authority for the collection of this information is 35 U.S.C. 2(b)(2); (2) furnishing of the information solicited is voluntary; and (3) the principal purpose for which the information is used by the U.S. Patent and Trademark Office is to process and/or examine your submission related to a patent application or patent. If you do not furnish the requested information, the U.S. Patent and Trademark Office may not be able to process and/or examine your submission, which may result in termination of proceedings or abandonment of the application or expiration of the patent.

The information provided by you in this form will be subject to the following routine uses:

1. The information on this form will be treated confidentially to the extent allowed under the Freedom of Information Act (5 U.S.C. 552) and the Privacy Act (5 U.S.C. 552a). Records from this system of records may be disclosed to the Department of Justice to determine whether the Freedom of Information Act requires disclosure of these records.

2. A record from this system of records may be disclosed, as a routine use, in the course of presenting evidence to a court, magistrate, or administrative tribunal, including disclosures to opposing counsel in the course of settlement negotiations.

3. A record in this system of records may be disclosed, as a routine use, to a Member of Congress submitting a request involving an individual, to whom the record pertains, when the individual has requested assistance from the Member with respect to the subject matter of the record.

4. A record in this system of records may be disclosed, as a routine use, to a contractor of the Agency having need for the information in order to perform a contract. Recipients of information shall be required to comply with the requirements of the Privacy Act of 1974, as amended, pursuant to 5 U.S.C. 552a(m).

5. A record related to an International Application filed under the Patent Cooperation Treaty in this system of records may be disclosed, as a routine use, to the International Bureau of the World Intellectual Property Organization, pursuant to the Patent Cooperation Treaty.

6. A record in this system of records may be disclosed, as a routine use, to another federal agency for purposes of National Security review (35 U.S.C. 181) and for review pursuant to the Atomic Energy Act (42 U.S.C. 218(c)).

7. A record from this system of records may be disclosed, as a routine use, to the Administrator, General Services, or his/her designee, during an inspection of records conducted by GSA as part of that agency's responsibility to recommend improvements in records management practices and programs, under authority of 44 U.S.C. 2904 and 2906. Such disclosure shall be made in accordance with the GSA regulations governing inspection of records for this purpose, and any other relevant (i.e., GSA or Commerce) directive. Such disclosure shall not be used to make determinations about individuals.

8. A record from this system of records may be disclosed, as a routine use, to the public after either publication of the application pursuant to 35 U.S.C. 122(b) or issuance of a patent pursuant to 35 U.S.C. 151. Further, a record may be disclosed, subject to the limitations of 37 CFR 1.14, as a routine use, to the public if the record was filed in an application which became abandoned or in which the proceedings were terminated and which application is referenced by either a published application, an application open to public inspections or an issued patent.

9. A record from this system of records may be disclosed, as a routine use, to a Federal, State, or local law enforcement agency, if the USPTO becomes aware of a violation or potential violation of law or regulation.

UNITED STATES PATENT AND TRADEMARK OFFICE

Commissioner for Patents
United States Patent and Trademark Office
P.O. Box 1450
Alexandria, VA 22313-1450
www.uspto.gov

In re Patent No. 6680819
Issue Date: January 20,2004
Application No. 10411204
Filed: April 11,2003
Attorney Docket No. 24268-Y

:
:DECISION GRANTING PETITION
:UNDER 37 CFR 1.378(c)
:

This is a decision on the electronic petition, filed March 23,2012 ,under 37 CFR 1.378(c) to accept the unintentionally delayed payment of the 7.5 year maintenance fee for the above-identified patent.

The petition is **GRANTED**.

The maintenance fee is accepted, and the above-identified patent reinstated as of March 23,2012 .
This decision also constitutes notice that the fee has been accepted. An electronic copy of the petition and this decision has been created as an entry in the Image File Wrapper. Nevertheless, petitioner should print and retain an independent copy.

Telephone inquiries related to this electronic decision should be directed to the Electronic Business Center at 1-866-217-9197.

UNITED STATES PATENT AND TRADEMARK OFFICE

Commissioner for Patents
United States Patent and Trademark Office
P.O. Box 1450
Alexandria, VA 22313-1450
www.uspto.gov

MICHELE M SIMKIN
FOLEY & LARDNER LLP
WASHINGTON HARBOUR
3000 K STREET NW SUITE 500
WASHINGTON DC 20007-5143

MAILED

JUN 10 2011

OFFICE OF PETITIONS

| | |
|---|---|
| In re Patent No. 7,888,466 | : DECISION ON |
| Li | : REQUEST FOR RECONSIDERATION |
| Application No. 10/411,284 | : of PATENT TERM ADJUSTMENT |
| Issue Date: February 15, 2011 | : and |
| Filed: April 11, 2003 | : NOTICE OF INTENT TO ISSUE |
| Attorney Docket No. 075977-0109 | : CERTIFICATE OF CORRECTION |

This is a decision on the "REQUEST FOR RECONSIDERATION OF PATENT TERM ADJUSTMENT FOR PATENT TERM APPLICATION UNDER 37 C.F.R. 1.705(b)", filed April 14, 2011, requesting that the patent term adjustment indicated on the above-identified patent be corrected from one thousand nine hundred thirty-six (1936) days to two thousand two hundred forty-three (2243) days.

The petition is **GRANTED to the extent indicated herein.**

On February 15, 2011, the instant application matured into U.S. Patent No. 7,888,466 with a patent term adjustment of 1936 days. The Office determined a patent term adjustment of 1936 days based upon 650 days of Office delay pursuant to 37 CFR 1.703(a)(1), 896 days of Office delay pursuant to 37 CFR 1.703(e), and 567 days pursuant to 37 CFR 1.703(b), reduced by 89 and 88 days of Applicant delay pursuant to 37 CFR 1.704(b).

Patentee is correct that the Office did not correctly calculate the "B" delay period. The over three year period began on April 12, 2006 and ended on October 5, 2007 (the date Applicant filed a Notice of Appeal), and resumed on March 19, 2010 (the date after the Office mailed a decision on Appeal) and ended on February 15, 2011 (the patent issue date). See 37 CFR 1.703(b)(4). As such, the total "B" delay period is 876 days. The 650 days of "A" delay run from June 12, 2004 to March 23, 2006, and therefore do not overlap with the days of "B" delay.

In view thereof, the correct number of days of patent term adjustment is 2245 days (650 days of "A"' delay, 876 days of "B" delay, and 896 days of "C" delay, reduced by 177 days of Applicant delay).

Receipt of the $200.00 fee set forth in 37 CFR 1.18(e) is acknowledged.

The application is being forwarded to the Certificate of Corrections Branch for issuance of a certificate of correction. The Office will issue a certificate of correction indicating that the term of the above-identified patent is extended or adjusted by **two thousand two hundred forty-five (2245)** days.

Telephone inquiries specific to this matter should be directed to Petitions Attorney Cliff Congo, at (571) 272-3207.

Anthony Knight
Director
Office of Petitions

Enclosure: Copy of DRAFT Certificate of Correction

UNITED STATES PATENT AND TRADEMARK OFFICE

# DRAFT CERTIFICATE OF CORRECTION

PATENT : 7,888,466 B2

DATED : **February 15, 2011**

INVENTOR(S) : Li

It is certified that error appears in the above-identified patent and that said Letters Patent is hereby corrected as shown below:

On the cover page,

[*] Notice: Subject to any disclaimer, the term of this patent is extended or adjusted under 35 USC 154(b) by 1936 days.

Delete the phrase "by 1936 days" and insert – by 2245 days--

UNITED STATES PATENT AND TRADEMARK OFFICE

Commissioner for Patents
United States Patent and Trademark Office
P.O. Box 1450
Alexandria, VA 22313-1450
www.uspto.gov

**FENWICK & WEST LLP**
**SILICON VALLEY CENTER**
**801 CALIFORNIA STREET**
**MOUNTAIN VIEW CA 94041**

MAILED
MAY 31 2011
OFFICE OF PETITIONS

| | | |
|---|---|---|
| In re Application of | : | |
| BOYD, et al | : | |
| Application No. 10/411,341 | : | DECISION ON PETITION |
| Filed: April 11, 2003 | : | |
| Attorney Docket No. 27360-15672 | : | |

This is a decision on the petition under 37 CFR 1.182, filed April 25, 2011, to change the order of the names of the inventors.

The petition is **GRANTED**.

Office records have been corrected to reflect the change in the order of the named inventors. A corrected Filing Receipt, which sets forth the desired order of the named inventors, accompanies this decision on petition.

As authorized, petitioner has paid the $400 fee for the petition under 37 CFR 1.182.

This application is being referred to Technology Center AU 2168 for further processing.

Telephone inquiries regarding this decision should be directed to Diane Goodwyn at (571) 272-6735.

Thurman K. Page
Petitions Examiner
Office of Petitions

ATTACHMENT: Corrected Filing Receipt

UNITED STATES PATENT AND TRADEMARK OFFICE

UNITED STATES DEPARTMENT OF COMMERCE
United States Patent and Trademark Office
Address: COMMISSIONER FOR PATENTS
P.O. Box 1450
Alexandria, Virginia 22313-1450
www.uspto.gov

| APPLICATION NUMBER | FILING or 371(c) DATE | GRP ART UNIT | FIL FEE REC'D | ATTY.DOCKET.NO | TOT CLAIMS | IND CLAIMS |
|---|---|---|---|---|---|---|
| 10/411,341 | 04/11/2003 | 2168 | 7060 | 27360-15672 | 20 | 3 |

**CONFIRMATION NO. 7550**

**CORRECTED FILING RECEIPT**

758
FENWICK & WEST LLP
SILICON VALLEY CENTER
801 CALIFORNIA STREET
MOUNTAIN VIEW, CA 94041

*OC000000047929937*

Date Mailed: 05/27/2011

Receipt is acknowledged of this non-provisional patent application. The application will be taken up for examination in due course. Applicant will be notified as to the results of the examination. Any correspondence concerning the application must include the following identification information: the U.S. APPLICATION NUMBER, FILING DATE, NAME OF APPLICANT, and TITLE OF INVENTION. Fees transmitted by check or draft are subject to collection. Please verify the accuracy of the data presented on this receipt. **If an error is noted on this Filing Receipt, please submit a written request for a Filing Receipt Correction. Please provide a copy of this Filing Receipt with the changes noted thereon. If you received a "Notice to File Missing Parts" for this application, please submit any corrections to this Filing Receipt with your reply to the Notice. When the USPTO processes the reply to the Notice, the USPTO will generate another Filing Receipt incorporating the requested corrections**

**Applicant(s)**

Geoff Smith, Calgary, CANADA;
Garrett Camp, Calgary, CANADA;
Eric Boyd, Meaford, CANADA;
Justin LaFrance, Calgary, CANADA;

**Assignment For Published Patent Application**

eBay Inc., San Jose, CA

**Power of Attorney:** The patent practitioners associated with Customer Number 00758

**Domestic Priority data as claimed by applicant**

This appln claims benefit of 60/371,706 04/12/2002

**Foreign Applications** (You may be eligible to benefit from the **Patent Prosecution Highway** program at the USPTO. Please see http://www.uspto.gov for more information.)

**If Required, Foreign Filing License Granted:** 06/03/2003

The country code and number of your priority application, to be used for filing abroad under the Paris Convention, is **US 10/411,341**

**Projected Publication Date:** Not Applicable

**Non-Publication Request:** No

**Early Publication Request:** No
**** SMALL ENTITY ****

**Title**

Method and system for single-action personalized recommendation and display of internet content

**Preliminary Class**

707

## PROTECTING YOUR INVENTION OUTSIDE THE UNITED STATES

Since the rights granted by a U.S. patent extend only throughout the territory of the United States and have no effect in a foreign country, an inventor who wishes patent protection in another country must apply for a patent in a specific country or in regional patent offices. Applicants may wish to consider the filing of an international application under the Patent Cooperation Treaty (PCT). An international (PCT) application generally has the same effect as a regular national patent application in each PCT-member country. The PCT process **simplifies** the filing of patent applications on the same invention in member countries, but **does not result** in a grant of "an international patent" and does not eliminate the need of applicants to file additional documents and fees in countries where patent protection is desired.

Almost every country has its own patent law, and a person desiring a patent in a particular country must make an application for patent in that country in accordance with its particular laws. Since the laws of many countries differ in various respects from the patent law of the United States, applicants are advised to seek guidance from specific foreign countries to ensure that patent rights are not lost prematurely.

Applicants also are advised that in the case of inventions made in the United States, the Director of the USPTO must issue a license before applicants can apply for a patent in a foreign country. The filing of a U.S. patent application serves as a request for a foreign filing license. The application's filing receipt contains further information and guidance as to the status of applicant's license for foreign filing.

Applicants may wish to consult the USPTO booklet, "General Information Concerning Patents" (specifically, the section entitled "Treaties and Foreign Patents") for more information on timeframes and deadlines for filing foreign patent applications. The guide is available either by contacting the USPTO Contact Center at 800-786-9199, or it can be viewed on the USPTO website at http://www.uspto.gov/web/offices/pac/doc/general/index.html.

For information on preventing theft of your intellectual property (patents, trademarks and copyrights), you may wish to consult the U.S. Government website, http://www.stopfakes.gov. Part of a Department of Commerce initiative, this website includes self-help "toolkits" giving innovators guidance on how to protect intellectual property in specific countries such as China, Korea and Mexico. For questions regarding patent enforcement issues, applicants may call the U.S. Government hotline at 1-866-999-HALT (1-866-999-4158).

## LICENSE FOR FOREIGN FILING UNDER

## Title 35, United States Code, Section 184

## Title 37, Code of Federal Regulations, 5.11 & 5.15

**GRANTED**

The applicant has been granted a license under 35 U.S.C. 184, if the phrase "IF REQUIRED, FOREIGN FILING LICENSE GRANTED" followed by a date appears on this form. Such licenses are issued in all applications where the conditions for issuance of a license have been met, regardless of whether or not a license may be required as

set forth in 37 CFR 5.15. The scope and limitations of this license are set forth in 37 CFR 5.15(a) unless an earlier license has been issued under 37 CFR 5.15(b). The license is subject to revocation upon written notification. The date indicated is the effective date of the license, unless an earlier license of similar scope has been granted under 37 CFR 5.13 or 5.14.

This license is to be retained by the licensee and may be used at any time on or after the effective date thereof unless it is revoked. This license is automatically transferred to any related applications(s) filed under 37 CFR 1.53(d). This license is not retroactive.

The grant of a license does not in any way lessen the responsibility of a licensee for the security of the subject matter as imposed by any Government contract or the provisions of existing laws relating to espionage and the national security or the export of technical data. Licensees should apprise themselves of current regulations especially with respect to certain countries, of other agencies, particularly the Office of Defense Trade Controls, Department of State (with respect to Arms, Munitions and Implements of War (22 CFR 121-128)); the Bureau of Industry and Security, Department of Commerce (15 CFR parts 730-774); the Office of Foreign AssetsControl, Department of Treasury (31 CFR Parts 500+) and the Department of Energy.

**NOT GRANTED**

No license under 35 U.S.C. 184 has been granted at this time, if the phrase "IF REQUIRED, FOREIGN FILING LICENSE GRANTED" DOES NOT appear on this form. Applicant may still petition for a license under 37 CFR 5.12, if a license is desired before the expiration of 6 months from the filing date of the application. If 6 months has lapsed from the filing date of this application and the licensee has not received any indication of a secrecy order under 35 U.S.C. 181, the licensee may foreign file the application pursuant to 37 CFR 5.15(b).

UNITED STATES PATENT AND TRADEMARK OFFICE

Commissioner for Patents
United States Patent and Trademark Office
P.O. Box 1450
Alexandria, VA 22313-1450
www.uspto.gov

MINTZ, LEVIN, COHN, FERRIS,
GLOVSKY AND POPEO, P.C
ONE FINANCIAL CENTER
BOSTON MA 02111

MAILED
SEP 10 2010
OFFICE OF PETITIONS

| | | |
|---|---|---|
| In re Application of | : | |
| Schneck, et al. | : | |
| Application No. 10/411,354 | : | DECISION ON APPLICATION |
| Filed: April 9, 2003 | : | FOR |
| Atty Docket No. **38820-523001US** | : | PATENT TERM ADJUSTMENT |

This is a decision on the "APPLICATION FOR PATENT TERM ADJUSTMENT UNDER TO 37 CFR 1.705(b)," filed April 7, 2010. Applicant request that the initial Determination of Patent Term Adjustment under 35 U.S.C. 154(b) be corrected from three hundred and ninety-three (393) days to two hundred and seventy-seven (277) days.

The application for patent term adjustment is **GRANTED TO THE EXTENT INDICATED HEREIN**.

The Office has updated the PALM and PAIR screens to reflect that the patent term adjustment determination at the time of the mailing of the notice of allowance is **271 days**. A copy of the updated PAIR screen, showing the corrected determination, is enclosed.

On January 8, 2010, the Office mailed the Determination of Patent Term Adjustment under 35 U.S.C. 154(b) in the above-identified application. The Notice stated that the patent term adjustment to date is 393 days. Applicant timely filed the instant application for patent term adjustment.[1]

Applicants' first argument is that:

> [t]he Office incorrectly applied 46 days of Office delay for the non-final Office action mailed November 1, 2007.

[1] PALM finance records indicate the issue fee was paid on April 7, 2010.

> The 4-month period for an Office response should have been calculated from the date of a decision on Pre-Appeal Brief Conference Review was mailed (August 2, 2007) and not the date of Applicants' reply filed before the Notice of Appeal

*Excerpt taken from "APPLICATION FOR PATENT TERM ADJUSTMENT UNDER TO 37 CFR 1.705(b)," filed April 7, 2010, p. 1.*

Applicants' argument has been considered and is not persuasive. Pursuant to 37 CFR 1.702(a)(2) and 37 CFR 1.703(a)(2), the adjustment to the patent term was properly determined to be 46 days with said period beginning on that day after the date the reply 37 CFR 1.111 was filed, September 17, 2007, and ending on the date the non-final Office rejection was mailed November 1, 2007. **The 46 days of adjustment to the patent term will not be removed, accordingly.**

Applicants' second argument is that:

> [a]pplicants are entitled to a credit of 51 days for successful appellate review under 35 U.S.C. 154(b)(1)(c) and 37 CFR 1.702(e) and 1.703(e). A notice of appeal was filed on June 13, 2007, and a decision in favor of Applicant was mailed on August 2, 2007, a period of 51 days.

*Excerpt taken from "APPLICATION FOR PATENT TERM ADJUSTMENT UNDER TO 37 CFR 1.705(b)," filed April 7, 2010, p. 1.*

Applicants' argument has been considered and is not persuasive. The reopening of prosecution pursuant to a Pre-Appeal Review is not a successful appellate review within the meaning of 37 CFR 1.702(e). The record does not reveal that the processing of the application was delayed due to a review of the Board of Patent Appeals and Interferences or a federal court or that the patent is issuing under a decision in review by the Board of Patent Appeals and Interferences reversing an adverse determination of patentability. Neither was the reopening of prosecution after the Pre-Appeal Review a remand by the Board of Patent Appeals and Interferences. The record does not reveal that there has been a successful appellate review such that adjustment to the patent term under 37 CFR 1.702(e) and 1.703(e) is warranted.

Applicants' also assert that a period of reduction of 121 days should be entered pursuant to 37 CFR 1.704(c)(3) because of the abandonment of the application. Applicants' argument is largely persuasive. The record reveals that the application became abandoned on June 24, 2005, for failure to respond to a non-

final Office action. A petition under 37 CFR 1.137(b) was filed on December 5, 2005. Pursuant to 37 CFR 1.704(c)(3), the period of reduction is 286 days, beginning on the date of abandonment, June 24, 2005, and ending on the date that is four months after the date a grantable petition to revive the application was filed, April 5, 2006. It is noted that a period of 164 days overlaps with a reduction entered pursuant to 37 CFR 1.704(b) during the period from June 24, 2005 through December 5, 2005. **Thus, only a period of reduction 122 days is being entered pursuant 37 CFR 1.704(c)(3).**

In view thereof, the patent term adjustment at the time of the mailing of the notice of allowance is 271 days (678 days of Office delay - 407 days of applicant delay).

The $200.00 fee set forth in 37 CFR 1.18(e) was received on April 7, 2010. No additional fees are required.

Applicants are reminded that any delays by the Office pursuant to 37 CFR 1.702(a)(4) and 1.702(b) and any applicant delays under 37 CFR 1.704(c)(10) will be calculated at the time of the issuance of the patent and applicants will be notified in the Issue Notification letter that is mailed to applicants approximately three weeks prior to issuance.

The Office of Data Management has been advised of this decision. This matter is being referred to the Office of Data Management for issuance of the patent.

Telephone inquiries specific to this matter should be directed to the undersigned (571) 272-3222.

/Kenya A. McLaughlin/

Kenya A. McLaughlin
Petitions Attorney
Office of Petitions

Enclosure: Copy of REVISED PAIR Screen

# Patent Term Adjustments

PTA/PTE Information | Patent Term Adjustment | Patent Term Extension

Application Number*: 10411354 Search | Explanation of PTA Calculation | Explanation of PTE Calculation

## PTA Calculations for Application: 10411354

| | | | |
|---|---|---|---|
| Application Filing Date | 04/09/2003 | OverLapping Days Between (A and B) or (A and C) | 0 |
| Issue Date of Patent | | Non-Overlapping USPTO Delays: | 678 |
| A Delays | 678 | PTO Manual Adjustment | -122 |
| B Delays | 0 | Applicant Delay (APPL) | 285 |
| C Delays | 0 | Total PTA (days) | 271 |

* - Sorted Column

## File Contents History

| Action Number | Action Recorded Date | Action Due Date | Action Code | Action Description | Duration PTO | Duration APPL | Parent Action Number |
|---|---|---|---|---|---|---|---|
| 99 | 09/08/2010 | | P028 | Adjustment of PTA Calculation by PTO | | 122 | 0 |
| 90 | 01/08/2010 | | MN/=. | Mail Notice of Allowance | | | 0 |
| 89 | 01/05/2010 | | IREV | Issue Revision Completed | | | 0 |
| 88 | 01/05/2010 | | N/=. | Notice of Allowance Data Verification Completed | | | 0 |
| 87 | 01/05/2010 | | DOCK | Case Docketed to Examiner in GAU | | | 0 |
| 85 | 01/05/2010 | | EX.A | Examiner's Amendment Communication | | | 0 |
| 84 | 01/05/2010 | | DVER | Document Verification | | | 0 |
| 86 | 01/04/2010 | | EXIN | Examiner Interview Summary Record (PTOL - 413) | | | 0 |
| 83 | 01/04/2010 | | CNTA | Notice of Allowability | | | 0 |
| 78 | 12/28/2009 | | FWDX | Date Forwarded to Examiner | | | 0 |
| 77 | 12/16/2009 | 11/18/2009 | A... | Response after Non-Final Action | | 28 | 73 |
| 76 | 12/16/2009 | | XT/G | Request for Extension of Time - Granted | | | 0 |
| 73 | 08/18/2009 | | MCTNF | Mail Non-Final Rejection | | | 0 |
| 72 | 08/17/2009 | | CTNF | Non-Final Rejection | | | 0 |
| 74 | 07/29/2009 | | M844 | Information Disclosure Statement (IDS) Filed | | | 0 |
| 71 | 07/29/2009 | | IDSC | Information Disclosure Statement considered | | | 0 |
| 70 | 07/29/2009 | | IDSC | Information Disclosure Statement considered | | | 0 |
| 69 | 07/29/2009 | | IDSC | Information Disclosure Statement considered | | | 0 |
| 67 | 07/29/2009 | | WIDS | Information Disclosure Statement (IDS) Filed | | | 0 |
| 66 | 07/29/2009 | | WIDS | Information Disclosure Statement (IDS) Filed | | | 0 |
| 65 | 07/29/2009 | | WIDS | Information Disclosure Statement (IDS) Filed | | | 0 |
| 61 | 06/15/2009 | | FWDX | Date Forwarded to Examiner | | | 0 |
| 59 | 06/15/2009 | | FWDX | Date Forwarded to Examiner | | | 0 |
| 57 | 06/15/2009 | | ABN9 | Disposal for a RCE / CPA / R129 | | | 0 |
| 75 | 06/10/2009 | | M844 | Information Disclosure Statement (IDS) Filed | | | 0 |
| 68 | 06/10/2009 | | IDSC | Information Disclosure Statement considered | | | 0 |
| 64 | 06/10/2009 | | RCAP | Reference capture on IDS | | | 0 |
| 63 | 06/10/2009 | | M844 | Information Disclosure Statement (IDS) Filed | | | 0 |
| 62 | 06/10/2009 | | WIDS | Information Disclosure Statement (IDS) Filed | | | 0 |
| 60 | 06/10/2009 | | AMSB | Amendment Submitted/Entered with Filing of CPA/RCE | | | 0 |
| 58 | 06/10/2009 | 03/10/2009 | RCEX | Request for Continued Examination (RCE) | | 92 | 49 |
| 56 | 06/10/2009 | | XT/G | Request for Extension of Time - Granted | | | 0 |
| 52 | 06/10/2009 | | BRCE | Workflow - Request for RCE - Begin | | | 0 |
| 51 | 04/14/2009 | | PA.. | Change in Power of Attorney (May Include Associate POA) | | | 0 |
| 50 | 04/07/2009 | | C.AD | Correspondence Address Change | | | 0 |
| 49 | 12/10/2008 | | MCTFR | Mail Final Rejection (PTOL - 326) | | | 0 |
| 48 | 12/08/2008 | | CTFR | Final Rejection | | | 0 |
| 47 | 09/30/2008 | | FWDX | Date Forwarded to Examiner | | | 0 |
| 46 | 08/29/2008 | | A... | Response after Non-Final Action | | | 0 |
| 45 | 05/29/2008 | | MCTNF | Mail Non-Final Rejection | | | 0 |
| 44 | 05/27/2008 | | CTNF | Non-Final Rejection | | | 0 |
| 42 | 03/22/2008 | | FWDX | Date Forwarded to Examiner | | | 0 |
| 43 | 02/01/2008 | | IDSC | Information Disclosure Statement considered | | | 0 |
| 41 | 02/01/2008 | | A... | Response after Non-Final Action | | | 0 |
| 40 | 02/01/2008 | | RCAP | Reference capture on IDS | | | 0 |
| 39 | 02/01/2008 | | M844 | Information Disclosure Statement (IDS) Filed | | | 0 |
| 38 | 02/01/2008 | | WIDS | Information Disclosure Statement (IDS) Filed | | | 0 |
| 37 | 12/12/2007 | | DOCK | Case Docketed to Examiner in GAU | | | 0 |
| 36 | 11/01/2007 | 09/16/2007 | MCTNF | Mail Non-Final Rejection | 46 | | 26 |
| 35 | 10/29/2007 | | CTNF | Non-Final Rejection | | | 0 |
| 33 | 08/02/2007 | | MAPCR | Mail Appeals conf. Reopen Prosec. | | | 0 |
| 34 | 08/01/2007 | | FWDX | Date Forwarded to Examiner | | | 0 |
| 32 | 07/31/2007 | | APCR | Pre-Appeals Conference Decision - Reopen Prosecution | | | 0 |
| 31 | 06/13/2007 | | AP.C | Request for Pre-Appeal Conference Filed | | | 0 |
| 30 | 06/13/2007 | | N/AP | Notice of Appeal Filed | | | 0 |

| | | | | | | | |
|---|---|---|---|---|---|---|---|
| 29 | 05/30/2007 | | MCTAV | Mail Advisory Action (PTOL - 303) | | | 0 |
| 28 | 05/25/2007 | | CTAV | Advisory Action (PTOL-303) | | | 0 |
| 27 | 05/17/2007 | | FWDX | Date Forwarded to Examiner | | | 0 |
| 26 | 05/16/2007 | | A.NE | Amendment after Final Rejection | | | 0 |
| 25 | 03/16/2007 | 04/05/2006 | MCTFR | Mail Final Rejection (PTOL - 326) | 345 | | 22 |
| 24 | 03/15/2007 | | CTFR | Final Rejection | | | 0 |
| 23 | 01/16/2007 | | FWDX | Date Forwarded to Examiner | | | 0 |
| 21 | 05/04/2006 | | MPREV | Mail-Petition to Revive Application - Granted | | | 0 |
| 19 | 12/08/2005 | | C.AD | Correspondence Address Change | | | 0 |
| 22 | 12/05/2005 | 06/23/2005 | A... | Response after Non-Final Action | | 165 | 18 |
| 20 | 12/05/2005 | | PET. | Petition Entered | | | 0 |
| 18 | 03/23/2005 | 06/09/2004 | MCTNF | Mail Non-Final Rejection | 287 | | -1 |
| 17 | 03/21/2005 | | CTNF | Non-Final Rejection | | | 0 |
| 16 | 08/17/2004 | | TSSCOMP | IFW TSS Processing by Tech Center Complete | | | 0 |
| 15 | 08/17/2004 | | DOCK | Case Docketed to Examiner in GAU | | | 0 |
| 14 | 07/13/2004 | | TI1050 | Transfer Inquiry to GAU | | | 0 |
| 13 | 06/01/2004 | | TI1050 | Transfer Inquiry to GAU | | | 0 |
| 12 | 10/16/2003 | | OIPE | Application Dispatched from OIPE | | | 0 |
| 11 | 10/16/2003 | | COMP | Application Is Now Complete | | | 0 |
| 10 | 09/10/2003 | | FLFEE | Payment of additional filing fee/Preexam | | | 0 |
| 9 | 09/10/2003 | | OATHDECL | A statement by one or more inventors satisfying the requirement under 35 USC 115, Oath of the Applic | | | 0 |
| 8 | 07/08/2003 | | INCD | Notice Mailed--Application Incomplete--Filing Date Assigned | | | 0 |
| 4 | 05/13/2003 | | L128 | Cleared by L&R (LARS) | | | 0 |
| 3 | 05/13/2003 | | SCAN | IFW Scan & PACR Auto Security Review | | | 0 |
| 2 | 05/03/2003 | | SCAN | IFW Scan & PACR Auto Security Review | | | 0 |
| 1 | 04/09/2003 | | IEXX | Initial Exam Team nn | | | 0 |

Export to: Excel

UNITED STATES PATENT AND TRADEMARK OFFICE

Commissioner for Patents
United States Patent and Trademark Office
P.O. Box 1450
Alexandria, VA 22313-1450
www.uspto.gov

**Ms. Sandra Swain**
**Sybron Dental Specialities, Inc.**
**1717 West Collins Avenue**
**Orange CA 92867**

MAILED

SEP 16 2010

OFFICE OF PETITIONS

In re Application of :
Daniel P. Clark :
Application No. 10/411,426 :
Patent No. 6,843,967 :
Filed: April 10, 2003 :
Attorney Docket No. **96382**

NOTICE

This is a notice regarding your request for acceptance of a fee deficiency submission under 37 CFR 1.28.

The Office no longer investigates or rejects original or reissue patent under 37 CFR 1.56. **1098 Off. Gaz. Pat. Office 502 (January 3, 1989)**. Therefore, nothing in this Notice is intended to imply that an investigation was done.

Your fee deficiency submission under 37 CFR 1.28 is hereby **ACCEPTED**.

This patent is no longer entitled to small entity status. Accordingly, all future fees paid in this patent must be paid at the large entity rate.

The application file does not indicate a change of address has been filed in this case, although the address given on the petition differs from the address of record. A change of address should be filed in this case in accordance with MPEP 601.03. A courtesy copy of this decision is being mailed to the address noted on the petition. However, until otherwise instructed, all future correspondence regarding this application will be mailed solely to the address of record.

There is no indication that the person signing the petition was ever given a power of attorney to prosecute the application. If the person signing the petition desires to receive future correspondence regarding this application, the appropriate power of attorney document must be submitted. While a courtesy copy of this decision is being mailed to the person signing the petition, all future correspondence will be directed to the address currently of record until appropriate instructions are received.

Inquiries related to this communication should be directed to the undersigned at (571) 272-2783.

/Tredelle D. Jackson/
Paralegal Specialist
Office of Petitions

cc: **WOOD, HERRON & EVANS, L. L. P.**
**2700 CAREW TOWER**
**441 VINE STREET**
**CINCINNATI OH 45202**

PTO/SB/66 (03-09)
Approved for use through 03/31/2012. OMB 0651-0016
U.S. Patent and Trademark Office: U.S. DEPARTMENT OF COMMERCE
Under the Paperwork Reduction Act of 1995, no persons are required to respond to a collection of information unless it displays valid OMB control number.

# PETITION TO ACCEPT UNINTENTIONALLY DELAYED PAYMENT OF MAINTENANCE FEE IN AN EXPIRED PATENT (37 CFR 1.378(c))

| Patent Number | Issue Date (YYYY-MM-DD) | Application Number | Filing Date (YYYY-MM-DD) | Docket Number (if applicable) |
|---|---|---|---|---|
| 7,041,131 | 2006-05-09 | 10/411,816 | 2003-04-11 | |

CAUTION: Maintenance fee (and surcharge, if any) payment must correctly identify: (1) the patent number and (2) the application number of the actual U.S. application leading to issuance of that patent to ensure the fee(s) is/are associated with the correct patent. 37 CFR 1.366(c) and (d).

SMALL ENTITY
☐ Patentee claims, or has previously claimed, small entity status. See 37 CFR 1.27.

LOSS OF ENTITLEMENT TO SMALL ENTITY STATUS
☒ Patentee is no longer entitled to small entity status. See 37 CFR 1.27(g)

| NOT Small Entity | | Small Entity | |
|---|---|---|---|
| Fee | Code | Fee | Code |
| ◉ 3 ½ year | (1551) | ○ 3 ½ year | (2551) |
| ○ 7 ½ year | (1552) | ○ 7 ½ year | (2552) |
| ○ 11 ½ year | (1553) | ○ 11 ½ year | (2553) |

SURCHARGE
The surcharge required by 37 CFR 1.20(i)(2) (Fee Code 1558) must be paid as a condition of accepting unintentionally delayed payment of the maintenance fee.

MAINTENANCE FEE (37 CFR 1.20(e)-(g))
The appropriate maintenance fee must be submitted with this petition.

STATEMENT
THE UNDERSIGNED CERTIFIES THAT THE DELAY IN PAYMENT OF THE MAINTENANCE FEE TO THIS PATENT WAS UNINTENTIONAL

PETITIONER(S) REQUEST THAT THE DELAYED PAYMENT OF THE MAINTENANCE FEE BE ACCEPTED AND THE PATENT REINSTATED

THIS PORTION MUST BE COMPLETED BY THE SIGNATORY OR SIGNATORIES

37 CFR 1.378(d) states: "Any petition under this section must be signed by an attorney or agent registered to practice before the Patent and Trademark Office, or by the patentee, the assignee, or other party in interest."

I certify, in accordance with 37 CFR 1.4(d)(4) that I am

◉ An attorney or agent registered to practice before the Patent and Trademark Office

○ A sole patentee

○ A joint patentee; I certify that I am authorized to sign this submission on behalf of all the other patentees.

○ A joint patentee; all of whom are signing this e-petition

○ The assignee of record of the entire interest

Under the Paperwork Reduction Act of 1995, no persons are required to respond to a collection of information unless it displays valid OMB control number.

| Patent Practitioner | | | |
|---|---|---|---|
| A signature of the applicant or representative is required in accordance with 37 CFR 1.33 and 10.18. Please see 37 CFR 1.4(d) for the form of the signature | | | |
| Signature | /Ravi Dipali/ | Date (YYYY-MM-DD) | 2011-07-27 |
| Name | Ravi Dipali | Registration Number | 60553 |

This collection of information is required by 37 CFR 1.378(c). The information is required to obtain or retain a benefit by the public which is to file (and by the USPTO to process) an application. Confidentiality is governed by 35 U.S.C. 122 and 37 CFR 1.11 and 1.14. This collection is estimated to take 1 hour to complete, including gathering, preparing, and submitting the completed application form to the USPTO. Time will vary depending upon the individual case. Any comments on the amount of time you require to complete this form and/ or suggestions for reducing this burden, should be sent to the Chief Information Officer, U.S. Patent and Trademark Office, U.S. Department of Commerce, P.O. Box 1450, Alexandria, VA 22313-1450. DO NOT SEND FEES OR COMPLETED FORMS TO THIS ADDRESS. **This form can only be used when in conjunction with EFS-Web. If this form is mailed to the USPTO, it may cause delays in reinstating the patent.**

# Privacy Act Statement

The Privacy Act of 1974 (P.L. 93-579) requires that you be given certain information in connection with your submission of the attached form related to a patent application or patent. Accordingly, pursuant to the requirements of the Act, please be advised that: (1) the general authority for the collection of this information is 35 U.S.C. 2(b)(2); (2) furnishing of the information solicited is voluntary; and (3) the principal purpose for which the information is used by the U.S. Patent and Trademark Office is to process and/or examine your submission related to a patent application or patent. If you do not furnish the requested information, the U.S. Patent and Trademark Office may not be able to process and/or examine your submission, which may result in termination of proceedings or abandonment of the application or expiration of the patent.

The information provided by you in this form will be subject to the following routine uses:

1. The information on this form will be treated confidentially to the extent allowed under the Freedom of Information Act (5 U.S.C. 552) and the Privacy Act (5 U.S.C. 552a). Records from this system of records may be disclosed to the Department of Justice to determine whether the Freedom of Information Act requires disclosure of these records.

2. A record from this system of records may be disclosed, as a routine use, in the course of presenting evidence to a court, magistrate, or administrative tribunal, including disclosures to opposing counsel in the course of settlement negotiations.

3. A record in this system of records may be disclosed, as a routine use, to a Member of Congress submitting a request involving an individual, to whom the record pertains, when the individual has requested assistance from the Member with respect to the subject matter of the record.

4. A record in this system of records may be disclosed, as a routine use, to a contractor of the Agency having need for the information in order to perform a contract. Recipients of information shall be required to comply with the requirements of the Privacy Act of 1974, as amended, pursuant to 5 U.S.C. 552a(m).

5. A record related to an International Application filed under the Patent Cooperation Treaty in this system of records may be disclosed, as a routine use, to the International Bureau of the World Intellectual Property Organization, pursuant to the Patent Cooperation Treaty.

6. A record in this system of records may be disclosed, as a routine use, to another federal agency for purposes of National Security review (35 U.S.C. 181) and for review pursuant to the Atomic Energy Act (42 U.S.C. 218(c)).

7. A record from this system of records may be disclosed, as a routine use, to the Administrator, General Services, or his/her designee, during an inspection of records conducted by GSA as part of that agency's responsibility to recommend improvements in records management practices and programs, under authority of 44 U.S.C. 2904 and 2906. Such disclosure shall be made in accordance with the GSA regulations governing inspection of records for this purpose, and any other relevant (i.e., GSA or Commerce) directive. Such disclosure shall not be used to make determinations about individuals.

8. A record from this system of records may be disclosed, as a routine use, to the public after either publication of the application pursuant to 35 U.S.C. 122(b) or issuance of a patent pursuant to 35 U.S.C. 151. Further, a record may be disclosed, subject to the limitations of 37 CFR 1.14, as a routine use, to the public if the record was filed in an application which became abandoned or in which the proceedings were terminated and which application is referenced by either a published application, an application open to public inspections or an issued patent.

9. A record from this system of records may be disclosed, as a routine use, to a Federal, State, or local law enforcement agency, if the USPTO becomes aware of a violation or potential violation of law or regulation.

UNITED STATES PATENT AND TRADEMARK OFFICE

Commissioner for Patents
United States Patent and Trademark Office
P.O. Box 1450
Alexandria, VA 22313-1450
www.uspto.gov

In re Patent No. 7041131
Issue Date: May 9,2006
Application No. 10411816
Filed: April 11,2003
Attorney Docket No. 056001/02802

:
:DECISION GRANTING PETITION
:UNDER 37 CFR 1.378(c)
:

This is a decision on the electronic petition, filed July 27,2011 ,under 37 CFR 1.378(c) to accept the unintentionally delayed payment of the 3.5 year maintenance fee for the above-identified patent.

The petition is **GRANTED**.

The maintenance fee is accepted, and the above-identified patent reinstated as of July 27,2011 .
This decision also constitutes notice that the fee has been accepted. An electronic copy of the petition and this decision has been created as an entry in the Image File Wrapper. Nevertheless, petitioner should print and retain an independent copy.

Telephone inquiries related to this electronic decision should be directed to the Electronic Business Center at 1-866-217-9197.

UNITED STATES PATENT AND TRADEMARK OFFICE

Commissioner for Patents
United States Patent and Trademark Office
P.O. Box 1450
Alexandria, VA 22313-1450
www.uspto.gov

**ORGANOGENESIS, INC.**
**150 DAN ROAD**
**CANTON MA 02021**

MAILED
SEP 09 2011
OFFICE OF PETITIONS

| | | |
|---|---|---|
| In re Patent No. 7,041,131 | : | |
| Issued: May 9, 2006 | : | |
| Application No. 10/411,816 | : | ON PETITION |
| Filed: April 11, 2003 | | |
| Attorney Docket No. 056001/02802 | : | |
| | : | |

This is a decision on the petition under 37 CFR 1.378(c), filed August 2, 2011, to accept the delayed payment of a maintenance fee for the above-identified patent.

The petition is **DISMISSED AS MOOT**.

A petition to accept the delayed payment of a maintenance fee under 37 CFR 1.378(c), for the above-identified patent, was previously granted on July 27, 2011. Petitioner has submitted a duplicate of the petition filed July 27, 2011.

Telephone inquiries concerning this decision should be directed to the undersigned at 571-272-7751. All other inquiries concerning either the examination or status of the application should be directed to the Technology Center.

/Joan Olszewski/
Joan Olszewski
Petitions Examiner
Office of Petitions

UNITED STATES PATENT AND TRADEMARK OFFICE

Commissioner for Patents
United States Patent and Trademark Office
P.O. Box 1450
Alexandria, VA 22313-1450
www.uspto.gov

**SCHWEGMAN, LUNDBERG & WOESSNER/EBAY**
**P.O. BOX 2938**
**MINNEAPOLIS MN 55402**

MAILED
OCT 15 2010
OFFICE OF PETITIONS

| | | |
|---|---|---|
| In re Application of | : | |
| Monahan et al. | : | |
| Application No. 10/412,194 | : | ON PETITION |
| Filed: April 11, 2003 | : | |
| Attorney Docket No. 2043.096US1 | : | |

This is a decision on the petition under 37 C.F.R. § 1.137(b), filed September 13, 2010, to revive the above-identified application.

The petition is **GRANTED**.

The petition satisfies the requirements of 37 CFR 1.137(b) in that petitioner has supplied (1) the reply in the form of an Amendment and Response under 37 CFR 1.111, (2) the petition fee of $1620.00, and (3) a proper statement of unintentional delay.

Telephone inquiries concerning this decision should be directed to the undersigned at (571) 272-3206.

This matter is being referred to Technology Center AU 3688 for further examination on the merits.

Liana Walsh
Petitions Examiner
Office of Petitions

UNITED STATES PATENT AND TRADEMARK OFFICE

Commissioner for Patents
United States Patent and Trademark Office
P.O. Box 1450
Alexandria, VA 22313-1450
www.uspto.gov

MAILED

SEP 10 2010

OFFICE OF PETITIONS

LaHive & Cockfield, LLP/BIOGEN IDEC
Floor, 30, Suite 3000
One Post Office Square
Boston, MA 02109-2127

| | |
|---|---|
| In re Patent No. 7,429,644 | : |
| Garber et al. | : DECISION UPON REMAND AND |
| Issue Date: September 30, 2008 | : RECONSIDERATION OF |
| Application No. 10/412,406 | : PATENT TERM ADJUSTMENT |
| Filed: April 10, 2003 | : AND NOTICE OF INTENT |
| Attorney Docket No. BGN-A100CN | : TO ISSUE CERTIFICATE OF |
| Title: Humanized Anti-LT-Beta-R-Antibodies | : CORRECTION |

This is a decision following remand from the District Court for the District of Columbia regarding the patent term adjustment indicated on the above-identified patent. The Court remanded this matter to the U.S. Patent and Trademark Office for recalculation of the patent term adjustment in accordance with the decision in Wyeth & Elan Pharma Int'l Ltd. v. Kappos, 591 F.3d 1364 (Fed. Cir. 2010).

The patent term adjustment indicated on the above-identified patent has been recalculated as directed by the Court. The term of the above-identified patent is extended or adjusted by one thousand and seventy (1070) days.

The application is being forwarded to the Certificates Branch for issuance of a certificate of correction indicating that the term of the above-identified patent is extended or adjusted by one thousand and seventy (1070) days.

Telephone inquiries specific to this matter should be directed to Senior Legal Advisor Kery A. Fries at (571) 272-7757.

/Kery A. Fries/

Kery Fries
Senior Legal Advisor Attorney

Office of Patent Legal Administration
Office of Associate Commissioner
For Patent Examination Policy

Enclosure: Copy of DRAFT Certificate of Correction

UNITED STATES PATENT AND TRADEMARK OFFICE

# CERTIFICATE OF CORRECTION

PATENT : 7,429,644

DATED : **September 30, 2008** **DRAFT**

INVENTOR(S) : Garber et al.

It is certified that error appears in the above-identified patent and that said Letters Patent is hereby corrected as shown below:

On the cover page,

[*] Notice: Subject to any disclaimer, the term of this patent is extended or adjusted under 35 USC 154(b) by 520 days

Delete the phrase "by 520 days" and insert – by 1070 days--

Day : Wednesday

PALM INTRANET

Date: 9/1/2010
Time: 09:33:41

| PTA Calculations for Application: 10/412406 | | | |
|---|---|---|---|
| Application Filing Date: | 04/10/2003 | PTO Delay (PTO): | 904 |
| Issue Date of Patent: | 09/30/2008 | Three Years: | 0 |
| Pre-Issue Petitions: | 0 | Applicant Delay (APPL): | 384 |
| Post-Issue Petitions: | 0 | Total PTA (days): | 1070 |
| PTO Delay Adjustment: | 550 | | |

**File Contents History**

| Number | Date | Contents Description | PTO | APPL | START |
|---|---|---|---|---|---|
| 90 | 09/01/2010 | ADJUSTMENT OF PTA CALCULATION BY PTO | 550 | | |
| 82.5 | 09/10/2008 | PTA 36 MONTHS | 354 | | |
| 82 | 09/30/2008 | PATENT ISSUE DATE USED IN PTA CALCULATION | | | |
| 81 | 08/29/2008 | EXPORT TO FINAL DATA CAPTURE | | | |
| 80 | 08/28/2008 | FINISHED INITIAL DATA CAPTURE | | | |
| 79 | 08/28/2008 | DISPATCH TO FDC | | | |
| 78 | 07/10/2008 | APPLICATION IS CONSIDERED READY FOR ISSUE | | | |
| 77 | 07/10/2008 | WORKFLOW - QUERY REQUEST - FINISH | | | |
| 76 | 06/30/2008 | RESPONSE TO REASONS FOR ALLOWANCE | | | |
| 75 | 06/30/2008 | ISSUE FEE PAYMENT VERIFIED | | | |
| 74 | 06/30/2008 | ISSUE FEE PAYMENT RECEIVED | | | |
| 73 | 05/30/2008 | MAIL MISCELLANEOUS COMMUNICATION TO APPLICANT | | | |
| 72 | 05/27/2008 | MISCELLANEOUS COMMUNICATION TO APPLICANT - NO ACTION COUNT | | | |
| 71 | 05/05/2008 | PUBS CASE REMAND TO TC | | | |
| 70 | 05/12/2008 | WORKFLOW - QUERY REQUEST - BEGIN | | | |
| 69 | 04/17/2008 | SEQUENCE FORWARDED TO PUBS ON TAPE | | | |
| 68 | 04/07/2008 | EXPORT TO INITIAL DATA CAPTURE | | | |
| 66 | 04/04/2008 | MAIL NOTICE OF ALLOWANCE | | | |
| 65 | 04/01/2008 | ISSUE REVISION COMPLETED | | | |
| 64 | 04/01/2008 | DOCUMENT VERIFICATION | | | |
| 63 | 04/01/2008 | NOTICE OF ALLOWANCE DATA VERIFICATION COMPLETED | | | |
| 62 | 04/01/2008 | CASE DOCKETED TO EXAMINER IN GAU | | | |

| | | | | | |
|---|---|---|---|---|---|
| 61 | 03/27/2008 | EXAMINER'S AMENDMENT COMMUNICATION | | | |
| 60 | 03/27/2008 | NOTICE OF ALLOWABILITY | | | |
| 59 | 09/07/2007 | INFORMATION DISCLOSURE STATEMENT CONSIDERED | | | |
| 58 | 10/09/2007 | INFORMATION DISCLOSURE STATEMENT CONSIDERED | | | |
| 57 | 03/24/2008 | MAIL EXAMINER INTERVIEW SUMMARY (PTOL - 413) | | | |
| 56 | 03/20/2008 | EXAMINER INTERVIEW SUMMARY RECORD (PTOL - 413) | | | |
| 55 | 03/15/2008 | DATE FORWARDED TO EXAMINER | | | |
| 54 | 03/12/2008 | AMENDMENT/ARGUMENT AFTER NOTICE OF APPEAL | | | |
| 53 | 03/12/2008 | NOTICE OF APPEAL FILED | | 91 | 45 |
| 52 | 03/12/2008 | REQUEST FOR EXTENSION OF TIME - GRANTED | | | |
| 51 | 11/13/2007 | CORRESPONDENCE ADDRESS CHANGE | | | |
| 50 | 10/09/2007 | INFORMATION DISCLOSURE STATEMENT (IDS) FILED | | | |
| 49 | 10/09/2007 | INFORMATION DISCLOSURE STATEMENT (IDS) FILED | | | |
| 48 | 09/07/2007 | REFERENCE CAPTURE ON IDS | | | |
| 47 | 09/07/2007 | INFORMATION DISCLOSURE STATEMENT (IDS) FILED | | 78 | 37 |
| 46 | 09/07/2007 | INFORMATION DISCLOSURE STATEMENT (IDS) FILED | | | |
| 45 | 09/12/2007 | MAIL FINAL REJECTION (PTOL - 326) | | | |
| 44 | 09/10/2007 | FINAL REJECTION | | | |
| 43 | 08/23/2007 | INFORMATION DISCLOSURE STATEMENT CONSIDERED | | | |
| 42 | 08/23/2007 | REFERENCE CAPTURE ON IDS | | | |
| 41 | 08/23/2007 | INFORMATION DISCLOSURE STATEMENT (IDS) FILED | | | |
| 40 | 09/05/2007 | CORRESPONDENCE ADDRESS CHANGE | | | |
| 39 | 08/23/2007 | INFORMATION DISCLOSURE STATEMENT (IDS) FILED | | | |
| 38 | 07/10/2007 | DATE FORWARDED TO EXAMINER | | | |
| 37 | 06/21/2007 | RESPONSE AFTER NON-FINAL ACTION | | 92 | 35 |
| 36 | 06/21/2007 | REQUEST FOR EXTENSION OF TIME - GRANTED | | | |
| 35 | 12/21/2006 | MAIL NON-FINAL REJECTION | | | |
| 34 | 12/19/2006 | NON-FINAL REJECTION | | | |
| 33 | 10/20/2006 | DATE FORWARDED TO EXAMINER | | | |

| | | | | | |
|---|---|---|---|---|---|
| 32 | 10/12/2006 | RESPONSE AFTER NON-FINAL ACTION | | 92 | 30 |
| 31 | 10/12/2006 | REQUEST FOR EXTENSION OF TIME - GRANTED | | | |
| 30 | 04/12/2006 | MAIL NON-FINAL REJECTION | | | |
| 29 | 04/03/2006 | NON-FINAL REJECTION | | | |
| 28 | 06/20/2005 | INFORMATION DISCLOSURE STATEMENT CONSIDERED | | | |
| 27 | 05/05/2005 | INFORMATION DISCLOSURE STATEMENT CONSIDERED | | | |
| 26 | 08/26/2004 | INFORMATION DISCLOSURE STATEMENT CONSIDERED | | | |
| 25 | 02/01/2006 | DATE FORWARDED TO EXAMINER | | | |
| 24 | 01/12/2006 | RESPONSE TO ELECTION / RESTRICTION FILED | | | |
| 23 | 12/12/2005 | MAIL RESTRICTION REQUIREMENT | 550 | | -1 |
| 22 | 12/09/2005 | REQUIREMENT FOR RESTRICTION / ELECTION | | | |
| 21 | 07/07/2005 | CASE DOCKETED TO EXAMINER IN GAU | | | |
| 20.7 | 06/20/2005 | INFORMATION DISCLOSURE STATEMENT (IDS) FILED | | | |
| 20 | 06/20/2005 | INFORMATION DISCLOSURE STATEMENT (IDS) FILED | | | |
| 19 | 06/28/2005 | CASE DOCKETED TO EXAMINER IN GAU | | | |
| 18 | 05/23/2005 | IFW TSS PROCESSING BY TECH CENTER COMPLETE | | | |
| 17.7 | 05/05/2005 | INFORMATION DISCLOSURE STATEMENT (IDS) FILED | | | |
| 17 | 05/05/2005 | INFORMATION DISCLOSURE STATEMENT (IDS) FILED | | | |
| 16 | 04/10/2003 | PRELIMINARY AMENDMENT | | | |
| 15.7 | 08/26/2004 | INFORMATION DISCLOSURE STATEMENT (IDS) FILED | | | |
| 15 | 08/26/2004 | INFORMATION DISCLOSURE STATEMENT (IDS) FILED | | | |
| 14 | 01/09/2004 | CASE DOCKETED TO EXAMINER IN GAU | | | |
| 13 | 12/19/2003 | CORRESPONDENCE ADDRESS CHANGE | | | |
| 12 | 10/06/2003 | OATH OR DECLARATION FILED (INCLUDING SUPPLEMENTAL) | | | |
| 11 | 10/06/2003 | MISCELLANEOUS INCOMING LETTER | | | |
| 10 | 10/16/2003 | APPLICATION DISPATCHED FROM OIPE | | | |
| 9 | 10/17/2003 | APPLICATION IS NOW COMPLETE | | | |
| 8 | 10/06/2003 | ADDITIONAL APPLICATION FILING FEES | | 31 | 6 |
| 7 | 10/06/2003 | A STATEMENT BY ONE OR MORE INVENTORS SATISFYING THE REQUIREMENT UNDER 35 USC | | | |

| | | | | | |
|---|---|---|---|---|---|
| | | 115, OATH OF THE APPLIC | | | |
| 6 | 06/05/2003 | NOTICE MAILED--APPLICATION INCOMPLETE--FILING DATE ASSIGNED | | | |
| 5 | 05/14/2003 | IFW SCAN & PACR AUTO SECURITY REVIEW | | | |
| 4 | 05/03/2003 | IFW SCAN & PACR AUTO SECURITY REVIEW | | | |
| 3 | 04/28/2003 | CRF IS GOOD TECHNICALLY / ENTERED INTO DATABASE | | | |
| 2 | 04/10/2003 | CRF DISK HAS BEEN RECEIVED BY PREEXAM / GROUP / PCT | | | |
| 1 | 04/10/2003 | INITIAL EXAM TEAM NN | | | |

**Search Another: Application#** [ ] Search

**EXPLANATION OF PTA CALCULATION**

**EXPLANATION OF PTE CALCULATION**

To go back, right click here and select Back. To go forward, right click here and select Forward. To refresh, right click here and select Refresh.

Back to OASIS | Home page

UNITED STATES PATENT AND TRADEMARK OFFICE

Commissioner for Patents
United States Patent and Trademark Office
P.O. Box 1450
Alexandria, VA 22313-1450
www.uspto.gov

PHARMACIA & UPJOHN
7000 PORTAGE ROAD
KZO-300-104
KALAMAZOO MI 49001

**MAILED**

NOV 17 2010

OFFICE OF PETITIONS

| | | |
|---|---|---|
| In re Application | : | |
| Stutzman-Engwall, et al. | : | |
| Application No. 10/412,450 | : | DECISION ON APPLICATION |
| Filed: June 11, 2003 | : | FOR PATENT TERM ADJUSTMENT |
| Docket No. PC10650C | : | |

This is a decision on the petition under 37 CFR 1.705(b), filed May 18, 2010. Applicants request that the initial determination of patent term adjustment under 35 U.S.C. 154(b) be corrected from four hundred sixty (460) days to three hundred eight (308) days.

The application for patent term adjustment is **GRANTED**.

On April 6, 2010, the Office mailed the Determination of Patent Term Adjustment under 35 U.S.C. 154(b) in the above-identified application. The Notice stated that the patent term adjustment (PTA) to date was four hundred sixty (460) days.

The Office initially determined a patent term adjustment of four hundred sixty (460) days based on an adjustment for PTO delay of four hundred eight-three (483) days pursuant to 35 U.S.C. 154(b)(1)(A)(i) and 37 CFR 1.703(a)(1), and five (5) days pursuant to 37 CFR 1.703(a)(2), reduced by twenty-eight (28) days of applicant delay pursuant to 37 CFR 1.704(b).

Applicants point out that six hundred twenty-four (624) days should have been assessed pursuant to 37 CFR 1.703(a)(1), not four hundred eighty-three (483) days. A review of the file reveals that the Office action mailed on December 7, 2005, for

which the Office was assessed 483 days of delay, was Applicants also argue that additional PTO delay should have been assessed with respect to the above. After Applicants filed their compliant Amendment on July 2, 2009, the Office mailed a final Office action on October 2, 2009. Applicants assert that PTO delay should have been accorded because the Office did not mail an Office action within four months of Applicants' original March 19, 2009 Amendment. Applicants argument has been considered, but is not persuasive. The Office's four month clock did not start until Applicants filed the compliant Amendment on July 2, 2009.

In addition, Applicants argue that they should have been assessed additional delay pursuant to 37 CFR 1.704(c)(7). The Office mailed a non-final Office action on August 9, 2006. Applicants filed an Amendment on November 9, 2006. However, the Office mailed a Notice of Non-Compliant Amendment on November 24, 2006. Applicants filed additional Amendments on December 19, 2006, April 11, 2007, and July 27, 2007, all of which were non-compliant, as the Office mailed additional Notices of Non-Compliant Amendments on March 22, 2007, June 27, 2007, and July 30, 2007, respectively. Applicants did not file a proper, compliant Amendment until August 29, 2007. Accordingly, pursuant to 37 CFR 1.704(c)(7), additional Applicant delay of 293 days should have been assessed.

In view thereof, the correct determination of patent term adjustment at the time of the mailing of the Notice of Allowance is **three hundred eight (308) days** (629 (624+5) days of PTO delay, reduced by 321 (293+28) days of applicant delay).

Receipt of the $200 fee for filing the instant application for patent term adjustment is acknowledged.

The application is being forwarded to the Office of Data Management for processing into a patent.

Telephone inquiries specific to this matter should be directed to Cliff Congo, Petitions Attorney, at (571)272-3207.

Anthony Knight
Director
Office of Petitions

Enc: copy of PAIR screen

# Patent Term Adjustments

PTA/PTE Information | Patent Term Adjustment | Patent Term Extension

Application Number*: 10412450 Search  Explanation of PTA Calculation  Explanation of PTE Calculation

## PTA Calculations for Application: 10412450

| | |
|---|---|
| Application Filing Date 06/11/2003 | OverLapping Days Between (A and B) or (A and C) 0 |
| Issue Date of Patent | Non-Overlapping USPTO Delays: 488 |
| A Delays 488 | PTO Manual Adjustment -152 |
| B Delays 0 | Applicant Delay (APPL) 28 |
| C Delays 0 | Total PTA (days) 308 |

* - Sorted Column

## File Contents History

| Action Number | Action Recorded Date | Action Due Date | Action Code | Action Description | Duration PTO | Duration APPL | Parent Action Number |
|---|---|---|---|---|---|---|---|
| 120 | 11/15/2010 | | P028 | Adjustment of PTA Calculation by PTO | | 152 | 0 |
| 118 | 04/06/2010 | 04/01/2010 | MN/= | Mail Notice of Allowance | 5 | | 111 |
| 117 | 03/30/2010 | | IREV | Issue Revision Completed | | | 0 |
| 116 | 03/30/2010 | | OVER | Document Verification | | | 0 |
| 115 | 03/30/2010 | | N/= | Notice of Allowance Data Verification Completed | | | 0 |
| 114 | 03/30/2010 | | DOCK | Case Docketed to Examiner in GAU | | | 0 |
| 113 | 03/26/2010 | | CNTA | Notice of Allowability | | | 0 |
| 112 | 01/25/2010 | | FWDX | Date Forwarded to Examiner | | | 0 |
| 111 | 12/01/2009 | | A... | Response after Non-Final Action | | | 0 |
| 110 | 09/11/2009 | | ELC_RVW | Electronic Review | | | 0 |
| 109 | 09/11/2009 | | EML_NTF | Email Notification | | | 0 |
| 108 | 09/11/2009 | | MCTNF | Mail Non-Final Rejection | | | 0 |
| 107 | 09/09/2009 | | CTNF | Non-Final Rejection | | | 0 |
| 106 | 07/02/2009 | | FWDX | Date Forwarded to Examiner | | | 0 |
| 104 | 07/02/2009 | | FWDX | Date Forwarded to Examiner | | | 0 |
| 102 | 07/02/2009 | | ABN9 | Disposal for a RCE / CPA / R129 | | | 0 |
| 105 | 06/29/2009 | | AMSB | Amendment Submitted/Entered with Filing of CPA/RCE | | | 0 |
| 103 | 06/29/2009 | | RCEX | Request for Continued Examination (RCE) | | | 0 |
| 101 | 06/29/2009 | | BRCE | Workflow - Request for RCE - Begin | | | 0 |
| 100 | 06/17/2009 | | EML_NTR | Email Notification | | | 0 |
| 98 | 06/17/2009 | | MCTAV | Mail Advisory Action (PTOL - 303) | | | 0 |
| 99 | 06/15/2009 | | PS74 | Paralegal TD Accepted | | | 0 |
| 97 | 06/15/2009 | | CTAV | Advisory Action (PTOL-303) | | | 0 |
| 96 | 06/12/2009 | | FWDX | Date Forwarded to Examiner | | | 0 |
| 95 | 06/11/2009 | | A.RE | Amendment after Final Rejection | | | 0 |
| 94 | 06/11/2009 | | DIST | Terminal Disclaimer Filed | | | 0 |
| 93 | 06/11/2009 | | TDP | terminal disclaimer fee paid | | | 0 |
| 92 | 05/19/2009 | | MCTFR | Mail Final Rejection (PTOL - 326) | | | 0 |
| 91 | 05/18/2009 | | CTFR | Final Rejection | | | 0 |
| 90 | 03/12/2009 | | PS75 | Paralegal TD Not accepted | | | 0 |
| 88 | 03/11/2009 | | FWDX | Date Forwarded to Examiner | | | 0 |
| 89 | 02/27/2009 | 02/27/2009 | DIST | Terminal Disclaimer Filed | | | 87 |
| 87 | 02/27/2009 | | A... | Response after Non-Final Action | | | 0 |
| 86 | 02/17/2009 | | MCTNF | Mail Non-Final Rejection | | | 0 |
| 85 | 02/11/2009 | | CTNF | Non-Final Rejection | | | 0 |
| 84 | 01/25/2009 | | FWDX | Date Forwarded to Examiner | | | 0 |
| 83 | 01/14/2009 | 12/17/2008 | A.NE | Amendment after Final Rejection | | 28 | 74 |
| 82 | 01/14/2009 | | XT/G | Request for Extension of Time - Granted | | | 0 |
| 81 | 12/17/2008 | | C.AD | Correspondence Address Change | | | 0 |
| 80 | 09/19/2008 | | PS74 | Paralegal TD Accepted | | | 0 |
| 79 | 09/19/2008 | | PS74 | Paralegal TD Accepted | | | 0 |
| 76 | 09/17/2008 | | ELC_RVW | Electronic Review | | | 0 |
| 75 | 09/17/2008 | | EML_NTF | Email Notification | | | 0 |
| 74 | 09/17/2008 | | MCTFR | Mail Final Rejection (PTOL - 326) | | | 0 |
| 73 | 09/15/2008 | | CTFR | Final Rejection | | | 0 |
| 72 | 07/02/2008 | | FWDX | Date Forwarded to Examiner | | | 0 |
| 78 | 05/21/2008 | 05/21/2008 | DIST | Terminal Disclaimer Filed | | | 71 |
| 77 | 05/21/2008 | | DIST | Terminal Disclaimer Filed | | | 0 |
| 71 | 05/21/2008 | | A... | Response after Non-Final Action | | | 0 |
| 70 | 05/10/2008 | | ELC_RVW | Electronic Review | | | 0 |
| 69 | 05/09/2008 | | EML_NTF | Email Notification | | | 0 |
| 68 | 05/09/2008 | | MCTNF | Mail Non-Final Rejection | | | 0 |
| 67 | 05/06/2008 | | CTNF | Non-Final Rejection | | | 0 |
| 66 | 05/03/2008 | | EXIN | Examiner Interview Summary Record (PTOL - 413) | | | 0 |
| 65 | 02/27/2008 | | PS74 | Paralegal TD Accepted | | | 0 |
| 64 | 02/27/2008 | | FWDX | Date Forwarded to Examiner | | | 0 |
| 62 | 02/21/2008 | | EML_NTR | Email Notification | | | 0 |
| 61 | 02/21/2008 | | MEXIN | Mail Examiner Interview Summary (PTOL - 413) | | | 0 |
| 63 | 02/12/2008 | | A... | Response after Non-Final Action | | | 0 |
| 60 | 02/11/2008 | | EXIN | Examiner Interview Summary Record (PTOL - 413) | | | 0 |
| 59 | 11/14/2007 | | MCTNF | Mail Non-Final Rejection | | | 0 |
| 58 | 11/13/2007 | | CTNF | Non-Final Rejection | | | 0 |
| 57 | 10/23/2007 | | C.AD | Correspondence Address Change | | | 0 |
| 56 | 09/04/2007 | | FWDX | Date Forwarded to Examiner | | | 0 |
| 55 | 08/29/2007 | | A... | Response after Non-Final Action | | | 0 |
| 53 | 07/30/2007 | | MSRNF | Mail Supplemental Non-Final Action | | | 0 |
| 52 | 07/23/2007 | | SRNF | Supplemental Non-Final Action | | | 0 |
| 54 | 06/27/2007 | | A.NQ | Amendment Crossed in Mail | | | 0 |
| 50 | 06/27/2007 | | MIRA | Mail Notice of Informal or Non-Responsive Amendment | | | 0 |
| 49 | 04/13/2007 | | FWDX | Date Forwarded to Examiner | | | 0 |
| 48.1 | 04/11/2007 | | A.I. | Informal or Non-Responsive Amendment after Examiner Action | | | 0 |
| 48 | 04/11/2007 | | A... | Response after Non-Final Action | | | 0 |
| 47 | 03/22/2007 | | MIRA | Mail Notice of Informal or Non-Responsive Amendment | | | 0 |
| 46 | 01/11/2007 | | FWDX | Date Forwarded to Examiner | | | 0 |
| 45.1 | 12/19/2006 | | A.I. | Informal or Non-Responsive Amendment after Examiner Action | | | 0 |
| 45 | 12/19/2006 | | A... | Response after Non-Final Action | | | 0 |
| 44 | 11/24/2006 | | MIRA | Mail Notice of Informal or Non-Responsive Amendment | | | 0 |
| 43 | 11/20/2006 | | FWDX | Date Forwarded to Examiner | | | 0 |
| 42.1 | 11/09/2006 | | A.I. | Informal or Non-Responsive Amendment after Examiner Action | | | 0 |
| 42 | 11/09/2006 | | A... | Response after Non-Final Action | | | 0 |
| 41 | 10/12/2006 | | DOCK | Case Docketed to Examiner in GAU | | | 0 |
| 40 | 08/09/2006 | | MCTNF | Mail Non-Final Rejection | | | 0 |
| 39 | 08/07/2006 | | CTNF | Non-Final Rejection | | | 0 |
| 37 | 05/24/2006 | | FWDX | Date Forwarded to Examiner | | | 0 |
| 36 | 05/22/2006 | | ELC- | Response to Election / Restriction Filed | | | 0 |
| 35 | 04/27/2006 | | MCTRS | Mail Restriction Requirement | | | 0 |
| 34 | 04/26/2006 | | CTRS | Requirement for Restriction / Election | | | 0 |
| 33 | 02/22/2006 | | C.AD | Correspondence Address Change | | | 0 |
| 32 | 02/22/2006 | | FWDX | Date Forwarded to Examiner | | | 0 |
| 31 | 01/06/2006 | | A... | Response after Non-Final Action | | | 0 |
| 29 | 12/07/2005 | 08/11/2004 | MCTMS | Mail Miscellaneous Communication to Applicant | 483 | | -1 |
| 28 | 12/05/2005 | | CTMS | Miscellaneous Action with SSP | | | 0 |
| 27 | 11/15/2005 | | DOCK | Case Docketed to Examiner in GAU | | | 0 |
| 26 | 08/28/2005 | | DOCK | Case Docketed to Examiner in GAU | | | 0 |
| 25 | 04/23/2004 | | TSSCOMP | IFW TSS Processing by Tech Center Complete | | | 0 |
| 24 | 04/23/2004 | | RCAP | Reference capture on IDS | | | 0 |
| 21 | 04/23/2004 | | DOCK | Case Docketed to Examiner in GAU | | | 0 |
| 20 | 09/04/2003 | | WRIOIPE | Application Return from OIPE | | | 0 |
| 19 | 09/04/2003 | | COMP | Application Is Now Complete | | | 0 |
| 18 | 09/04/2003 | | ROIPE | Application Return TO OIPE | | | 0 |
| 17 | 09/04/2003 | | OIPE | Application Dispatched from OIPE | | | 0 |
| 16 | 09/04/2003 | | COMP | Application Is Now Complete | | | 0 |
| 15 | 08/25/2003 | | ADDFLFEE | Additional Application Filing Fees | | | 0 |
| 14 | 08/25/2003 | | CORRDRW | Applicant has submitted new drawings to correct Corrected Papers problems | | | 0 |
| 13 | 08/14/2003 | | CPAP | Corrected Paper | | | 0 |
| 38 | 07/30/2003 | | IDSC | Information Disclosure Statement considered | | | 0 |
| 23.7 | 07/30/2003 | | M844 | Information Disclosure Statement (IDS) Filed | | | 0 |
| 23 | 07/30/2003 | | WIDS | Information Disclosure Statement (IDS) Filed | | | 0 |
| 6 | 07/01/2003 | | CRFE | CRF Is Good Technically / Entered into Database | | | 0 |
| 11 | 06/11/2003 | | ADDFLFEE | Additional Application Filing Fees | | | 0 |
| 10 | 06/11/2003 | | SEQLIST | A set of symbols and procedures, provided to the PTO on a set of computer listings, that describe in | | | 0 |
| 8 | 06/11/2003 | | DRAWING | Drawing Preliminary Amendment | | | 0 |

Export to: Excel

UNITED STATES PATENT AND TRADEMARK OFFICE

Commissioner for Patents
United States Patent and Trademark Office
P.O. Box 1450
Alexandria, VA 22313-1450
www.uspto.gov

George S. Cole, Esq.
Suite 101
495 Seaport Court
Redwood City, CA 94063

**MAILED**

NOV 04 2011

OFFICE OF PETITIONS

In re Patent No. 7,055,457 :
Issue Date: June 6, 2006 :
Application No. 10/412,496 : ON PETITION
Filed: April 11, 2003 :
Patentee(s): Carl T. Muirbrook :

This is a decision on the petition under 37 CFR 1.378(c), filed on October 17, 2011, to accept the delayed payment of a maintenance fee for the above-identified patent.

The petition is **DISMISSED**.

A petition to accept the unintentionally delayed payment of a maintenance fee under 35 U.S.C. § 41(c) and 37 CFR 1.378(c) must be accompanied by: (1) a statement that the delay was unintentional; (2) payment of the appropriate maintenance fee, unless previously submitted; (3) payment of the surcharge set forth in 37 CFR 1.20(i)(2). This petition lacks item (3) above.

A review of the record shows that payment of the 3 ½ year maintenance fee, in the amount of $1,495, was received on October 17, 2011. However, the proper payment for a 3 ½ year maintenance fee small entity is $565. Since a review of the record shows that petitioner failed to submit the unintentional late payment surcharge of $1,640, the overpayment of $930 will be applied towards the unintentional surcharge. Therefore, petitioner must submit the fee deficiency of $710 ($1640-$930) before reinstatement can occur.

Since the address given in the present petition differs from the correspondence address of record, a courtesy copy of this decision is being mailed to the address given in the petition. Thereafter, all future communications from the Office will be mailed solely to the correspondence address of record.

If reconsideration of this decision is desired, a petition for reconsideration under 37 CFR 1.378(e) must be filed within **TWO (2) MONTHS** from the mail date of this decision. No extension of this two-month time limit can be granted under 37 CFR 1.136(a) or (b). This is **not** a final agency action within the meaning of 5 U.S.C. § 704.

Any petition for reconsideration of this decision must be accompanied by the petition fee of **$400** as set forth in 37 CFR 1.17(f). The petition for reconsideration must include the lacking item noted above, since, after a decision on the petition for reconsideration, no further reconsideration or review of the matter will be undertaken by the Commissioner.

Further correspondence with respect to this matter should be addressed as follows:

By mail: Mail Stop PETITION
Commissioner for Patents
Post Office Box 1450
Alexandria, VA 22313-1450

By hand: U.S. Patent and Trademark Office
Customer Service Window, Mail Stop Petitions
Randolph Building
401 Dulany Street
Alexandria, VA 22314

The centralized facsimile number is (571) 273-8300.

Telephone inquiries should be directed to the undersigned at (571) 272-3226.

Andrea Smith
Petitions Examiner
Office of Petitions

cc: Sharon Adams
2140 Shattuck Avenue, Suite 207
Berkeley, CA 94704

UNITED STATES PATENT AND TRADEMARK OFFICE

Commissioner for Patents
United States Patent and Trademark Office
P.O. Box 1450
Alexandria, VA 22313-1450
www.uspto.gov

ADAMS LAW OFFICE
2140 SHATTUCK AVE. SUITE 207
BERKELEY, CA 94704

**MAILED**

FEB 21 2012

**OFFICE OF PETITIONS**

In re Patent No. 7,055,457 :
Issue Date: June 6, 2006 :
Application No. 10/412,496 : ON PETITION
Filed: April 11, 2003 :
Patentee(s): Carl T. Muirbrook :

This is a decision on the renewed petition under 37 CFR 1.378(c), filed on December 6, 2011, to accept the delayed payment of a maintenance fee for the above-identified patent.

Since petitioner has demonstrated to the satisfaction of the Commissioner that the delay in timely paying the maintenance fee was unintentional, the petition under 37 CFR 1.378(c) is hereby **GRANTED**.

The maintenance fee is hereby accepted and the above-identified patent is reinstated as of the mail date of this decision.

This patented file is being forwarded to Files Repository.

Telephone inquiries should be directed to the undersigned at (571) 272-3226.

/Andrea Smith/
Andrea Smith
Petitions Examiner
Office of Petitions

UNITED STATES PATENT AND TRADEMARK OFFICE

Commissioner for Patents
United States Patent and Trademark Office
P.O. Box 1450
Alexandria, VA 22313-1450
www.uspto.gov

QUINE INTELLECTUAL PROPERTY
LAW GROUP, P.C.
P O BOX 458
ALAMEDA CA 94501

MAILED
MAR 08 2011
OFFICE OF PETITIONS

In re Application of :
Truong-Le et al. :
Application No. 10/412,644 :
Filed: April 10, 2003 :
Attorney Docket No. 26-001010US :
For: SPRAY FREEZE DRY OF :
COMPOSITIONS FOR PULMONARY :
ADMINISTRATION :
:

ON APPLICATION FOR
PATENT TERM ADJUSTMENT

This is in response to the "REQUEST FOR RECONSIDERATION OF PATENT TERM ADJUSTMENT AND APPLICATION FOR PATENT TERM ADJUSTMENT UNDER 37 CFR §1.705" filed August 17, 2010. This petition is properly treated under 37 CFR 1.705(b). Applicants request that the determination of patent term adjustment be corrected from seven hundred thirty-one (731) days to one thousand eight hundred thirty-two (1,832) days. Applicants' dispute the 70 day and 82 day adjustments and the 85 and 94 day reductions. Applicants also request additional days based upon the failure to issue the patent within three years.

As the instant application for patent term adjustment requests reconsideration of the patent term adjustment as it relates to the Office's failure to issue the patent within 3 years of the filing date, the application for patent term adjustment under 37 CFR 1.705(b) is **DISMISSED as PREMATURE**.

The $200.00 petition fee set forth in 37 CFR 1.18(e) has been assessed from deposit account no. 50-0893 for consideration of the application for patent term adjustment under 37 CFR 1.705(b). No additional fees are required.

Knowledge of the actual date the patent issues is required to calculate the amount, if any, of additional patent term patentee

is entitled to for Office failure to issue the patent within 3 years. See § 1.702(b). (This is true even where a request for continued examination (RCE) was filed). The computer will not undertake the § 1.702(b) calculation until the actual date of issuance of the patent has been determined. Likewise, the computer will not calculate any further Office delay under § 1.702(a)(4) or applicant delay under § 1.704(c)(10) until the actual date of issuance of the patent has been determined. As such, the Office cannot make a determination on the correctness of the patent term adjustment until the patent has issued.

Requesting reconsideration of the patent term adjustment to be indicated on the patent under 37 CFR 1.705(b) based on the initial determination of patent term adjustment and a projected issuance date of the patent (or even the filing date of the request for continued examination) is premature. Accordingly, it is appropriate to dismiss as premature such a request.

Rather than file an application for patent term adjustment under 37 CFR 1.705(b) contesting the 37 CFR 1.702(b) calculation at the time of the mailing of the notice of allowance, applicant is advised that they may wait until the time of the issuance of the patent and file a request for reconsideration of the patent term adjustment pursuant to 37 CFR 1.705(d). As the USPTO does not calculate the amount of time earned pursuant to 37 CFR 1.702(b) until the time of the issuance of the patent, the Office will consider any request for reconsideration of the patent term adjustment due to an error in the calculation of 37 CFR 1.702(b) to be timely if the request for reconsideration is filed within two months of the issuance of the patent. However, as to all other bases for contesting the initial determination of patent term adjustment received with the notice of allowance, applicant must timely file an application for patent term adjustment prior to the payment of the issue fee[1].

---

[1] For example, if applicant disputes both the calculation of patent term adjustment under 37 CFR 1.702(a)(1) for Office failure to mail a first Office action or notice of allowance not later than fourteen months after the date on which the application was filed and under 37 CFR 1.702(b) for Office failure to issue a patent within three years of the actual filing date of the application, then applicant must still timely file an application for patent term adjustment prior to the payment of the issue fee to contest the calculation of Office delay in issuing a first Office action or notice of allowance. See 37 CFR 1.705(b) and 35 U.S.C. 154(b)(3)(B). A dispute as to the calculation of the §1.702(a)(1) period raised on request for

To the extent that applicant otherwise requests reconsideration of the patent term adjustment at the time of the mailing of the notice of allowance, the application for patent term adjustment is **Granted** to the extent indicated.

On May 20, 2010, the Office mailed the Determination of Patent Term Adjustment under 35 U.S.C. 154(b) in the above-identified application. The Notice stated that the patent term adjustment to date is 731 days. The instant application for patent term adjustment was timely filed on August 17, 2010.

Applicants argue that a 252 day adjustment instead of a 70 day adjustment is required for the delay in responding to the December 18, 2008 response. Applicants contend that the February 26, 2009 Office action was not a reply to the Request for Continued Examination (RCE) filed on December 18, 2008. Applicants state a proper Office action was not mailed until August 27, 2009, which vacated the February 26, 2009 Office action.

The Office has considered applicant's argument but does not find it persuasive. The Office has concluded that an adjustment of 70 days was properly entered based on 37 CFR 1.702(a)(2). 37 CFR 1.702(a)(2) provides that:

> Subject to the provisions of 35 U.S.C. 154(b) and this subpart, the term of an original patent shall be adjusted if the issuance of the patent was delayed due to the failure of the Office to:
>
> > Respond to a reply under 35 U.S.C. 132 or to an appeal taken under 35 U.S.C. 134 not later than four months after the date on which the reply was filed or the appeal was taken;

The mailing of the Office action on February 26, 2009, met the requirements of 37 CFR §1.702(a)(2). The subsequent mailing of a communication by the Supervisory Patent Examiner (SPE) vacating the previous action does not negate the fact that the Office took action in this application within the meaning of §

---

reconsideration of patent term adjustment under 37 CFR 1.705(d) will be dismissed as untimely filed.

1.702(a)(2) on February 26, 2009. The SPE does not have the authority to vacate, rescind, or withdraw an Office action. Unless vacated by the Technology Center Director, for purposes of calculating patent term adjustment, the action originally mailed by the examiner on February 26, 2009 will be used to calculate the amount of Office delay. As such the 70 day adjustment will remain.

Applicants request that the Office clarify he 82 day adjustment is appropriate. Applicants believe the Office delay may instead calculate to 50 days based upon the receipt of October 1, 2009 amendment after the final rejection.

A review of the record shows that the 82 day adjustment is warranted. The reply in compliance with 37 CFR 1.113(c) was the Notice of Appeal submitted on August 31, 2009. In this instance, the Office took until March 23, 2010 to mail a final Office action in response to the Notice of Appeal filed August 31, 2009. Pursuant to 37 CFR §1.703(a)(2), a period of adjustment of eighty-two (82) days, counting the number of days in the period beginning on the day after the date that is four months after the date a reply was filed, August 31, 2009, and ending on the date of mailing of an action under 35 U.S.C. 132, March 23, 2010, should have been entered. As such the 82 day adjustment will remain.

Applicants also dispute the 85 day reduction for the submission of the supplemental reply on July 20, 2007. Applicants contend that the total reduction should be 101 days, instead of the current 85 days.

Applicants' argument is persuasive that additional days of reduction are warranted. A review of the record shows that an additional 14 day reduction is required for the submission of the supplemental response in reply to the Notice of Non-Compliant Amendment mailed on July 12, 2007. 37 C.F.R. §1.704(c)(7) states:

7) Submission of a reply having an omission (§1.135(c)), in which case the period of adjustment set forth in § 1.703 shall be reduced by the number of days, if any, beginning on the day after the date the reply having an omission was filed and ending on the date that the reply or other paper correcting the omission was filed.

Therefore, the basis for reduction is 1.704(c)(7). Applicants should have been assessed delay for the period from July 7, 2007 (the period beginning on the day after the date the reply having an omission was filed) to July 20, 2007 (the date the reply or other paper correcting the omission was filed). Thus, the total period for the supplemental responses submitted on July 6, 2007 and July 20, 2007 after the original response filed on April 12, 2007 is 99 days (85 + 14).

Lastly, applicants dispute the 94 day reduction. Applicants contend that in response to the October 18, 2007 final Office action a response was timely submitted on January 7, 2008. Thus, applicants contend no reduction is required.

The Office has considered applicants' argument but does not find it persuasive. The Office has concluded that the reduction of 94 days was properly entered based on 37 CFR 1.704(b). 37 CFR §1.704(b) provides:

> an applicant shall be deemed to have failed to engage in reasonable efforts to conclude processing or examination of an application for the cumulative total of any periods of time in excess of three months that are taken to reply to any notice or action by the Office making any rejection, objection, argument, or other request, measuring such three-month period from the date the notice or action was mailed or given to the applicant, in which case the period of adjustment set forth in §1.703 shall be reduced by the number of days, if any, beginning on the day after the date that is three months after the date of mailing or transmission of the Office communication notifying the applicant of the rejection, objection, argument, or other request and ending on the date the reply was filed.

In this instance, a reduction of 94 days for the submission of reply the Notice of Appeal on April 21, 2008 is warranted. As the amendment filed on January 7, 2008 was not in compliance with 37 CFR 1.113(c), the period for reply to the final rejection mailed October 18, 2007, continued to run. The proper reply, the Notice of Appeal, was not received in the Office until April 21, 2008. The PTA was properly reduced by 94 days, the number of days in excess of three months that was taken to reply to the October 18, 2007 Office action. Pursuant to 37 CFR 1.704(b), a reduction of 94 days is required for applicants' delay for the period beginning January 19, 2008, the day after

the date that is three months after the mailing of the final Office action and ending on April 21, 2008, the date the reply in compliance with 37 CFR 1.113(c) was filed. As such, the 94 day reduction will remain.

The total days of Office delay at the time of the mailing of the notice of allowance is 940 days (748 + 40 + 70 + 82). The total days of Applicants delay at the time of the mailing of the Notice of Allowance is 223 days (28 + 2 + 85 + 14 + 94).

In view thereof, the determination of PTA at the time of the mailing of the notice of allowance is seven hundred seventeen **(717)** days.

Any request for reconsideration of the patent term adjustment indicated on the patent must be timely filed within 2 months after issuance pursuant to 37 CFR 1.705(d) and **must** include payment of the required fee under 37 CFR 1.18(e).

The Office of Data Management has been advised of this decision. This application is being referred to the Office of Data Management for issuance of the patent.

Telephone inquiries specific to this matter should be directed to the undersigned at (571) 272-3215.

Charlema Grant
Attorney
Office of Petitions

Enclosure: Copy of REVISED PALM Screen

# Patent Term Adjustments

PTA/PTE Information | Patent Term Adjustment | Patent Term Extension

Application Number*: 10412644 Search | Explanation of PTA Calculation | Explanation of PTE Calculation

## PTA Calculations for Application: 10412644

| | | | |
|---|---|---|---|
| Application Filing Date | 04/10/2003 | OverLapping Days Between (A and B) or (A and C) | 0 |
| Issue Date of Patent | | Non-Overlapping USPTO Delays: | 940 |
| A Delays | 940 | PTO Manual Adjustment | -14 |
| B Delays | 0 | Applicant Delay (APPL) | 209 |
| C Delays | 0 | Total PTA (days) | 717 |

* - Sorted Column

## File Contents History

| Action Number | Action Recorded Date | Action Due Date | Action Code | Action Description | Duration PTO | Duration APPL | Parent Action Number |
|---|---|---|---|---|---|---|---|
| 102 | 03/07/2011 | | P028 | Adjustment of PTA Calculation by PTO | | 14 | 0 |
| 91 | 05/20/2010 | | MN/=. | Mail Notice of Allowance | | | 0 |
| 90 | 05/20/2010 | | IREV | Issue Revision Completed | | | 0 |
| 89 | 05/20/2010 | | DVER | Document Verification | | | 0 |
| 88 | 05/20/2010 | | N/=. | Notice of Allowance Data Verification Completed | | | 0 |
| 87 | 05/20/2010 | | DOCK | Case Docketed to Examiner in GAU | | | 0 |
| 86 | 05/19/2010 | | CNTA | Allowability Notice | | | 0 |
| 81 | 04/28/2010 | | FWDX | Date Forwarded to Examiner | | | 0 |
| 80 | 04/20/2010 | | A.NE | Amendment after Final Rejection | | | 0 |
| 79 | 04/06/2010 | | MEXIN | Mail Examiner Interview Summary (PTOL - 413) | | | 0 |
| 78 | 04/05/2010 | | EXIN | Examiner Interview Summary Record (PTOL - 413) | | | 0 |
| 77 | 03/23/2010 | 12/31/2009 | MCTFR | Mail Final Rejection (PTOL - 326) | 82 | | 70 |
| 76 | 03/22/2010 | | CTFR | Final Rejection | | | 0 |
| 82 | 03/16/2010 | | LET. | Miscellaneous Incoming Letter | | | 0 |
| 74 | 03/01/2010 | | MCTAV | Mail Advisory Action (PTOL - 303) | | | 0 |
| 73 | 03/01/2010 | | CTAV | Advisory Action (PTOL-303) | | | 0 |
| 72 | 11/16/2009 | | FWDX | Date Forwarded to Examiner | | | 0 |
| 71 | 10/01/2009 | | AP/A | Amendment/Argument after Notice of Appeal | | | 0 |
| 70 | 08/31/2009 | | N/AP | Notice of Appeal Filed | | | 0 |
| 69 | 08/27/2009 | | MCTNF | Mail Non-Final Rejection | | | 0 |
| 68 | 08/27/2009 | | CTNF | Non-Final Rejection | | | 0 |
| 67 | 08/27/2009 | | MW/AC | Mail Notice of Withdrawn Action | | | 0 |
| 66 | 08/27/2009 | | FWDX | Date Forwarded to Examiner | | | 0 |
| 65 | 08/27/2009 | | W/AC | Withdrawing/Vacating Office Action Letter | | | 0 |
| 58 | 02/26/2009 | 12/18/2008 | MCTNF | Mail Non-Final Rejection | 70 | | 53 |
| 57 | 02/25/2009 | | CTNF | Non-Final Rejection | | | 0 |
| 56 | 09/10/2008 | | FWDX | Date Forwarded to Examiner | | | 0 |
| 54 | 09/10/2008 | | FWDX | Date Forwarded to Examiner | | | 0 |
| 52 | 09/10/2008 | | ABN9 | Disposal for a RCE / CPA / R129 | | | 0 |
| 55 | 08/18/2008 | | AMSB | Amendment Submitted/Entered with Filing of CPA/RCE | | | 0 |
| 51 | 08/18/2008 | | XT/G | Request for Extension of Time - Granted | | | 0 |
| 50 | 08/18/2008 | | BRCE | Workflow - Request for RCE - Begin | | | 0 |
| 40 | 05/30/2008 | | MCTAV | Mail Advisory Action (PTOL - 303) | | | 0 |
| 39 | 05/07/2008 | | CTAV | Advisory Action (PTOL-303) | | | 0 |
| 49 | 04/21/2008 | 01/18/2008 | N/AP | Notice of Appeal Filed | | 94 | 36 |
| 48 | 04/21/2008 | | XT/G | Request for Extension of Time - Granted | | | 0 |
| 38 | 02/16/2008 | | FWDX | Date Forwarded to Examiner | | | 0 |
| 37 | 01/07/2008 | | A.NE | Amendment after Final Rejection | | | 0 |
| 36 | 10/18/2007 | | MCTFR | Mail Final Rejection (PTOL - 326) | | | 0 |
| 35 | 10/15/2007 | | CTFR | Final Rejection | | | 0 |
| 33 | 08/02/2007 | | FWDX | Date Forwarded to Examiner | | | 0 |
| 32 | 07/20/2007 | | A... | Response after Non-Final Action | | | 0 |
| 29 | 07/12/2007 | | MCTMS | Mail Miscellaneous Communication to Applicant | | | 0 |
| 28 | 07/09/2007 | | CTMS | Miscellaneous Action with SSP | | | 0 |
| 34 | 07/06/2007 | | IDSC | Information Disclosure Statement considered | | | 0 |
| 31 | 07/06/2007 | 04/12/2007 | M844 | Information Disclosure Statement (IDS) Filed | | 85 | 26 |
| 30 | 07/06/2007 | | WIDS | Information Disclosure Statement (IDS) Filed | | | 0 |
| 27 | 04/26/2007 | | FWDX | Date Forwarded to Examiner | | | 0 |
| 26 | 04/12/2007 | 04/10/2007 | A... | Response after Non-Final Action | | 2 | 25 |
| 25 | 01/10/2007 | 12/01/2006 | MCTNF | Mail Non-Final Rejection | 40 | | 19 |
| 24 | 01/08/2007 | | CTNF | Non-Final Rejection | | | 0 |
| 20 | 11/02/2006 | | FWDX | Date Forwarded to Examiner | | | 0 |
| 19 | 08/01/2006 | | ELC. | Response to Election / Restriction Filed | | | 0 |
| 18 | 06/28/2006 | 06/10/2004 | MCTRS | Mail Restriction Requirement | 748 | | -1 |
| 17 | 06/26/2006 | | CTRS | Restriction/Election Requirement | | | 0 |

| | | | | | | |
|---|---|---|---|---|---|---|
| 16 | 01/17/2006 | | DOCK | Case Docketed to Examiner in GAU | | 0 |
| 15 | 01/10/2006 | | DOCK | Case Docketed to Examiner in GAU | | 0 |
| 22 | 07/06/2004 | | CFRPT | Corrected filing receipt | | 0 |
| 14 | 02/26/2004 | | TSSCOMP | IFW TSS Processing by Tech Center Complete | | 0 |
| 11 | 02/26/2004 | | DOCK | Case Docketed to Examiner in GAU | | 0 |
| 10 | 01/08/2004 | | TI1050 | Transfer Inquiry to GAU | | 0 |
| 21 | 12/15/2003 | | CFRPT | Corrected filing receipt | | 0 |
| 9 | 11/26/2003 | | OIPE | Application Dispatched from OIPE | | 0 |
| 8 | 11/26/2003 | | COMP | Application Is Now Complete | | 0 |
| 7 | 10/14/2003 | 09/16/2003 | FLFEE | Payment of additional filing fee/Preexam | 28 | 4 |
| 5 | 10/14/2003 | | OATHDECL | A statement by one or more inventors satisfying the requirement under 35 USC 115, Oath of the Applic | | 0 |
| 23 | 09/11/2003 | | IDSC | Information Disclosure Statement considered | | 0 |
| 13 | 09/11/2003 | | RCAP | Reference capture on IDS | | 0 |
| 12.7 | 09/11/2003 | | M844 | Information Disclosure Statement (IDS) Filed | | 0 |
| 12 | 09/11/2003 | | WIDS | Information Disclosure Statement (IDS) Filed | | 0 |
| 4 | 06/16/2003 | | INCD | Notice Mailed--Application Incomplete--Filing Date Assigned | | 0 |
| 3 | 05/14/2003 | | SCAN | IFW Scan & PACR Auto Security Review | | 0 |
| 2 | 05/03/2003 | | SCAN | IFW Scan & PACR Auto Security Review | | 0 |
| 1 | 04/10/2003 | | IEXX | Initial Exam Team nn | | 0 |

Export to: Excel

UNITED STATES PATENT AND TRADEMARK OFFICE

UNITED STATES DEPARTMENT OF COMMERCE
United States Patent and Trademark Office
Address: COMMISSIONER FOR PATENTS
P.O. Box 1450
Alexandria, Virginia 22313-1450
www.uspto.gov

| APPLICATION NO. | FILING DATE | FIRST NAMED INVENTOR | ATTORNEY DOCKET NO. | CONFIRMATION NO. |
|---|---|---|---|---|
| 10/412,695 | 04/14/2003 | Seiji Kageyama | H05-3753/SK | 4239 |

7590 08/04/2011
McGuire Woods LLP
Suite 1800
1750 Tysons Boulevard
McLean, VA 22102

| EXAMINER |
|---|
| LEE, TOMMY D |

| ART UNIT | PAPER NUMBER |
|---|---|
| 2625 | |

| MAIL DATE | DELIVERY MODE |
|---|---|
| 08/04/2011 | PAPER |

**Please find below and/or attached an Office communication concerning this application or proceeding.**

The time period for reply, if any, is set in the attached communication.

UNITED STATES PATENT AND TRADEMARK OFFICE

COMMISSIONER FOR PATENTS
UNITED STATES PATENT AND TRADEMARK OFFICE
P.O. BOX 1450
ALEXANDRIA, VA 22313-1450
www.uspto.gov

| | |
|---|---|
| *In re* Patent No. KAGEYAMA ET AL.<br>Issue Date: July 15, 2008<br>Appl No.: 10/412,695<br>Filed: April 14, 2003<br>For: **PRINTER FACILITATING SETTINGS OF PARAMETERS ON PRINT PAPER** | **DECISION GRANTING PETITION**<br>*37 CFR 1.324* |

This is a decision on the petition filed April 2, 2010 to correct inventorship under 37 CFR 1.324.

The petition is granted.

The patented file is being forwarded to Certificate of Corrections Branch for issuance of a certificate naming only the actual inventor or inventors.

Wellington Chin
Quality Assurance Specilist
Art Unit 2600
Technology Center 2600

McGuire Woods LLP
Suite 1800
1750 Tysons Boulevard
McLean, VA 22102

UNITED STATES PATENT AND TRADEMARK OFFICE

Commissioner for Patents
United States Patent and Trademark Office
P. O. Box 1450
Alexandria, VA 22313-1450
www.uspto.gov

OKAMOTO & BENEDICTO, LLP
P.O. BOX 641330
SAN JOSE CA 95164

MAILED
MAR 19 2012
OFFICE OF PETITIONS

In re Patent No. 7,388,147 :
Issue Date: June 17, 2008 :
Application No. 10/412,711 : NOTICE
Filed: April 10, 2003 :
Attorney Docket No. 10031.003000

This is a notice regarding your request for acceptance of a fee deficiency submission under 37 CFR 1.28. On September 1, 1998, the Court of Appeals for the Federal Circuit held that 37 CFR 1.28(c) is the sole provision governing the time for correction of the erroneous payment of the issue fee as a small entity. **See DH Technology v. Synergystex International, Inc. 154 F.3d 1333, 47 USPQ2d 1865 (Fed. Cir. Sept. 1, 1998).**

The Office no longer investigates or rejects original or reissue applications under 37 CFR 1.56. **1098 Off. Gaz. Pat. Office 502 (January 3, 1989)**. Therefore, nothing in this Notice is intended to imply that an investigation was done.

Your fee deficiency submission under 37 CFR 1.28 is hereby **ACCEPTED**.

Inquiries related to this communication should be directed to Irvin Dingle at (571) 272-3210.

Irvin Dingle
Petitions Examiner
Office of Petitions

UNITED STATES PATENT AND TRADEMARK OFFICE

Commissioner for Patents
United States Patent and Trademark Office
P.O. Box 1450
Alexandria, VA 22313-1450
www.uspto.gov

**KENYON & KENYON LLP**
**ONE BROADWAY**
**NEW YORK NY 10004**

**MAILED**
MAY 09 2011
**OFFICE OF PETITIONS**

| | | |
|---|---|---|
| In re Patent No. 7,151,234 | : | |
| Issue Date: December 19, 2006 | : | |
| Application No. 10/412,761 | : | ON PETITION |
| Filed: April 10, 2003 | : | |
| Attorney Docket No. 434/7 | : | |

This is a decision on the petition under 37 CFR 1.378(c), filed February 18, 2011, to accept the delayed payment of a maintenance fee for the above-identified patent.

The petition is **DISMISSED**.

If reconsideration of this decision is desired, a petition for reconsideration under 37 CFR 1.378(e) must be filed within TWO (2) MONTHS from the mail date of this decision. No extension of this two-month time limit can be granted under 37 CFR 1.136(a) or (b). This is **not** a final agency action within the meaning of 5 U.S.C. § 704.

Any petition for reconsideration of this decision must be accompanied by the petition fee of $400 as set forth in 37 CFR 1.17(f). The petition for reconsideration must include the lacking item(s) noted below, since, after a decision on the petition for reconsideration, no further reconsideration or review of the matter will be undertaken by the Commissioner.

A petition to accept the unintentionally delayed payment of a maintenance fee under 35 U.S.C. § 41(c) and 37 CFR 1.378(c) must be accompanied by: (1) a statement that the delay was unintentional; (2) payment of the appropriate maintenance fee, unless previously submitted; (3) payment of the surcharge set forth in 37 CFR 1.20(i)(2). This petition lacks item (1) above.

As to item (1) the statement of unintentional delay is presently not acceptable since it was not signed by all the inventors. See 37 CFR 1.33(b) which states:

> (b) Amendments and other papers. Amendments and other papers, except for written assertions pursuant to § 1.27(c)(2)(ii) of this part, filed in the application must be signed by:
> (1) A registered patent attorney or patent agent of record appointed in compliance with § 1.32(b);
> (2) A registered patent attorney or patent agent not of record who acts in a representative capacity under the provisions of § 1.34;
> (3) An assignee as provided for under §3.71(b) of this chapter; or
> (4) All of the applicants (§ 1.41(b)) for patent, unless there is an assignee of the entire interest and such assignee has taken action in the application in accordance with § 3.71 of this chapter.

The application file does not indicate a change of address has been filed in this case, although the address given on the petition differs from the address of record. A change of address should be filed in this case in accordance with MPEP 601.03. A courtesy copy of this decision is being mailed to the address noted on the petition. However, until otherwise instructed, all future correspondence regarding this application will be mailed solely to the address of record.

Further correspondence with respect to this matter should be addressed as follows:

By Mail: Mail Stop PETITION
Commissioner for Patents
Post Office Box 1450
Alexandria, VA 22313-1450

By hand: U. S. Patent and Trademark Office
Customer Service Window, Mail Stop Petitions
Randolph Building
401 Dulany Street
Alexandria, VA 22314

The centralized facsimile number is **(571) 273-8300.**

Telephone inquiries should be directed to the undersigned at (571) 272-4618.

/Kimberly Inabinet/

Kimberly Inabinet
Petitions Examiner
Office of Petitions

cc: Raymond Wolpert
40 Dale Street
West Babylon, NY 11704

UNITED STATES PATENT AND TRADEMARK OFFICE

Commissioner for Patents
United States Patent and Trademark Office
P.O. Box 1450
Alexandria, VA 22313-1450
www.uspto.gov

**KENYON & KENYON LLP**
**ONE BROADWAY**
**NEW YORK NY 10004**

**MAILED**
JUL 14 2011
**OFFICE OF PETITIONS**

| | | |
|---|---|---|
| In re Patent No. 7,151,234 | : | |
| Issue Date: December 19, 2006 | : | |
| Application No. 10/412,761 | : | ON PETITION |
| Filed: April 10, 2003 | : | |
| Attorney Docket No. 434/7 | : | |

This is a decision on the renewed petition under 37 CFR 1.378(c), filed June 20, 2011, to accept the unintentionally delayed payment of a maintenance fee for the above-identified patent.

The petition is **GRANTED**.

This patent expired on December 20, 2010, for failure to pay the three and one-half year maintenance fee. Since this petition was submitted within twenty-four months after the six-month grace period provided in 37 CFR 1.362(e), the petition was timely filed under the provisions of 37 CFR 1.378(c).

The maintenance fee is hereby accepted and the above-identified patent is reinstated as of the mail date of this decision.

A renewed petition fee in the amount of $400 will be charged to petitioner's deposit account.

Telephone inquiries concerning this decision should be directed to Kimberly Inabinet at (571) 272-4618.

The patent file is being forwarded to Files Repository.

/Kimberly Inabinet/

Kimberly Inabinet
Petitions Examiner
Office of Petitions

## SPE RESPONSE FOR CERTIFICATE OF CORRECTION

**DATE** : 02/13/12

**TO SPE OF** : ART UNIT 3621

**SUBJECT** : Request for Certificate of Correction for Appl. No.: 10413287 Patent No.: 7043453

CofC mailroom date: 01/13/12

Please respond to this request for a certificate of correction within 7 days.

**FOR IFW FILES:**

Please review the requested changes/corrections as shown in the **COCIN** document(s) in the IFW application image. No new matter should be introduced, nor should the scope or meaning of the claims be changed.

Please complete the response (see below) and forward the completed response to scanning using document code **COCX**.

**FOR PAPER FILES:**

Please review the requested changes/corrections as shown in the attached certificate of correction. Please complete this form (see below) and forward it with the file to:

**Certificates of Correction Branch (CofC)**
**Randolph Square – 9D10-A**
**Palm Location 7580**
You can fax the Directors/SPE response to 571-273-3421

**Note:** **Should the changes in the claims be approved?**

Lamonte Newsome

**Certificates of Correction Branch**

571-272-3421

**Thank You For Your Assistance**

**The request for issuing the above-identified correction(s) is hereby:**

Note your decision on the appropriate box.



U.S. DEPARTMENT OF COMMERCE Patent and Trademark Office

## SPE RESPONSE FOR CERTIFICATE OF CORRECTION

**X Approved** — **All** changes apply.

☐ **Approved in Part** — Specify below which changes **do not** apply.

☐ **Denied** — State the reasons for denial below.

**Comments:** _____

CALVIN HEWITT
SUPERVISORY PATENT EXAMINER

**SPE**

3685

**Art Unit**



PAGE 2/2 * RCVD AT 2/15/2012 7:21:26 PM [Eastern Standard Time] * SVR:W-PTOFAX-002/6 * DNIS:2733421 * CSID:703 308 3691 * DURATION (mm-ss):01-16

UNITED STATES PATENT AND TRADEMARK OFFICE

Commissioner for Patents
United States Patent and Trademark Office
P.O. Box 1450
Alexandria, VA 22313-1450
www.uspto.gov

FISH & RICHARDSON P.C. (BO)
PO BOX 1022
MINNEAPOLIS MN 55440-1022

**MAILED**
OCT 2 5 2011
**OFFICE OF PETITIONS**

In re Patent No. 7,981,448
Issued: July 19, 2011
Application No. 10/413,817
Filed: April 15, 2003
Attorney Docket No. 14022-0007001 / 00731

:DECISION ON APPLICATION
: FOR PATENT TERM ADJUSTMENT

This is a decision on the APPLICATION FOR PATENT TERM ADJUSTMENT UNDER 37 C.F.R. § 1.705(d) filed on September 19, 2011, requesting that the patent term adjustment indicated on the above-identified patent be corrected to indicate that the term of the above-identified patent is extended or adjusted from 590 to 478 days.

The request for review of the patent term adjustment is **GRANTED** to the extent indicated herein.

The patent term adjustment indicated in the patent is to be corrected by issuance of a certificate of correction showing a revised Patent Term Adjustment of THREE HUNDRED FIFTY (350) days.

Patentees are given **THIRTY (30) DAYS or ONE (1) MONTH, whichever is longer,** from the mail date of this decision to respond. No extensions of time will be granted under § 1.136.

On July 19, 2011, the above-identified application matured into U.S. Patent No. 7,981,448 with a patent term adjustment of 590 days. On September 19, 2011, Patentees submitted the instant application. Patentees disclose that the patent term adjustment of 590 days indicated on the front of the patent is incorrect because "Patentees filed an Information Disclosure Statement on July 8, 2010, subsequent to a reply filed on November 10, 2009. Patentees were accorded 0 days delay for a supplemental response. In good faith and candor, Patentees submit that the supplemental response should have been accorded a total Applicant Delay of 240 days for delay from November 11, 2009, to July 8, 2010. See 37 C.F.R. § 1.704(c)(8). In view of the periods of Applicant Delay detailed above, the total Applicant Delay for this patent should be calculated as 611 days (i.e., the sum of 89 days, 92 days, 190 days, and 240 days)."

Patentee also maintains that the Office incorrectly calculated Office delay pursuant to 37 CFR 1.702(b). Patentee contends that the Office erred in subtracting from the "B delay" a period of time that was not "consumed by continued examination of the application." Specifically, Patentee argues that (after the filing of the request for

continued examination) the Office mailed a Notice of Allowance on March 14, 2011, thereby closing examination of the application on that date. Thus, Patentee argues no continued examination took place during the 128 day period from March 14, 2011 (the mailing date of the Notice of Allowance) until July 19, 2011 (the date the patent was issued). As such, Patentee maintains that the "B delay" should include the 128 days and be increased from 0 to 128 days. Patentee concludes that the correct patent term adjustment is 478 days (the sum of 961 days of "A delay" and 128 days of "B delay" minus 611 days of Applicant delay).

## RELEVANT STATUTE AND REGULATIONS

37 CFR 1.704 (c) provides that:

> Circumstances that constitute a failure of the applicant to engage in reasonable efforts to conclude processing or examination of an application also include the following circumstances, which will result in the following reduction of the period of adjustment set forth in § 1.703 to the extent that the periods are not overlapping:
>
> (8) Submission of a supplemental reply or other paper, other than a supplemental reply or other paper expressly requested by the examiner, after a reply has been filed, in which case the period of adjustment set forth in § 1.703 shall be reduced by the number of days, if any, beginning on the day after the date the initial reply was filed and ending on the date that the supplemental reply or other such paper was filed;

The statutory basis for calculation of "B delay" is 35 U.S.C. 154(b)(1)(B) GUARANTEE OF NO MORE THAN 3-YEAR APPLICATION PENDENCY, which provides that:

Subject to the limitations under paragraph (2), if the issue of an original patent is delayed due to the failure of the United States Patent and Trademark Office to issue a patent within 3 years after the actual filing date of the application in the United States, not including —

(i) any time consumed by continued examination of the application requested by the applicant under section 132(b);

(ii) any time consumed by a proceeding under section 135(a), any time consumed by the imposition of an order under section 181, or any time consumed by appellate review by the Board of Patent Appeals and Interferences or by a Federal court; or

(iii) any delay in the processing of the application by the United States Patent and Trademark Office requested by the applicant except as permitted by paragraph

(3)(C), the term of the patent shall be extended 1 day for each day after the end of that 3-year period until the patent is issued.

The implementing regulation, 37 CFR 1.702(b) provides that:

Subject to the provisions of 35 U.S.C. 154(b) and this subpart, the term of an original patent shall be adjusted if the issuance of the patent was delayed due to the failure of the Office to issue a patent within three years after the date on which the application was filed under 35 U.S.C. 111(a) or the national stage commenced under 35 U.S.C. 371(b) or (f) in an international application, but not including:

(1) Any time consumed by continued examination of the application under 35 U.S.C. 132(b);

(2) Any time consumed by an interference proceeding under 35 U.S.C. 135(a);

(3) Any time consumed by the imposition of a secrecy order under 35 U.S.C. 181;

(4) Any time consumed by review by the Board of Patent Appeals and Interferences or a Federal court; or

(5) Any delay in the processing of the application by the Office that was requested by the applicant.

**OPINION**

Applicant's arguments have been considered. The Information Disclosure Statement filed July 8, 2010 was supplemental to the filing of the response filed November 10, 2009. In this instance, the filing of the Information Disclosure Statement on July 8, 2010 is considered a failure to engage under 1.704(c)(8). The IDS was not expressly requested by the examiner nor did the IDS include a 1.704(d) statement.

Pursuant to 37 CFR 1.704(c)(8) a period of reduction of 240 days counting the number of days in the period beginning on the day after the initial reply was filed, November 10, 2009 and ending on the date of filing of the last supplemental paper, the IDS filed July 8, 2010. Accordingly, a period of reduction of 240 days is being entered.

As it relates to the calculation of "B delay, Patentee's arguments have been considered, but not found persuasive. The Office calculated the period of "B delay" pursuant to 35 U.S.C. 154(b)(1)(B)(i) and 37 CFR 1.702(b)(1) as 0 days based on the application having been filed under 35 U.S.C. 111(a) on April 15, 2003 and the patent not having issued as of the day after the three year date, April 15, 2006, and a request for continued examination under 132(b) having been filed on September 29, 2006. In other words, the 128-day period beginning on the date of mailing of the notice of allowance to the date of issuance of the patent was considered time consumed by continued examination of an application under 35 U.S.C. 132(b) and was not included in the "B delay."

The Office's calculation of "B delay" is correct. The "B delay" is an adjustment entered if the issuance of the patent was delayed due to the failure of the Office to issue a patent within three years after the date on which the application was filed. However, the adjustment does not include, among other things, any time consumed by continued examination of the application at the request of the applicant under 35 U.S.C. 132(b)[1]. So, with respect to calculating the "B delay" where applicant has filed a request for continued examination, the period of adjustment is the number of days, if any, in the period beginning on the day after the date that is three years after the date on which the application was filed under 35 U.S.C. 111(a) or the national stage commenced under 35 U.S.C. 371(b) or (f) in an international application and ending on the date a patent was issued, but not including the number of days in the period beginning on the date on which a request for continued examination of the application under 35 U.S.C. 132(b) was filed and ending on the date the patent was issued.

Further, counting the period of time excluded from the "B delay" for the filing of a request for continued examination under 35 U.S.C. 132(b), from the date on which the request for continued examination is filed to the date the patent is issued is proper. Patentee does not dispute that time consumed by continued examination of an application under 35 U.S.C. 132(b) is properly excluded and that the calculation of the excluded period begins on the date of filing of the request for continued examination. At issue is what further processing or examination beyond the date of filing of the request for continued examination is not any time consumed by continued examination of the application under 35 U.S.C. 132(b). The USPTO indicated in September of 2000 in the final rule to implement the patent term adjustment provisions of the AIPA that once a request for continued examination under 35 U.S.C. 132(b) and 37 CFR 1.114 is filed in an application, any further processing or examination of the application, including granting of a patent, is by virtue of the continued examination given to the application under 35 U.S.C. 132(b) and CFR 1.114. See Changes to Implement Patent Term Adjustment under Twenty-Year Patent Term, 65 Fed. Reg. 56366, 56376 (Sept. 18, 2000) (response to comment 8). Thus, the excluded period begins with the filing of the request for continued examination and ends with the issuance of the patent.

---

[1] Pursuant to 35 U.S.C. 132(b) , 37 CFR 1.114 provides for continued examination of an application, as follows:

(a) If prosecution in an application is closed, an applicant may request continued examination of the application by filing a submission and the fee set forth in § 1.17(e) prior to the earliest of:

(1) Payment of the issue fee, unless a petition under § 1.313 is granted;

(2) Abandonment of the application; or

(3) The filing of a notice of appeal to the U.S. Court of Appeals for the Federal Circuit under 35 U.S.C. 141, or the commencement of a civil action under 35 U.S.C. 145 or 146, unless the appeal or civil action is terminated.

(b) Prosecution in an application is closed as used in this section means that the application is under appeal, or that the last Office action is a final action (§ 1.113), a notice of allowance (§ 1.311), or an action that otherwise closes prosecution in the application.

Patentee's argument that the period of time after the issuance of a notice of allowance on a request for continued examination is not "any time consumed by continued examination requested by the applicant under section 132(b)" within the meaning of 35 U.S.C. 154(b)(1)(B)(i) is not availing. This limitation is not supported by the statutory language. Garcia v. United States, 469 U.S. 70, 75 (1984) ("only the most extraordinary showing of contrary intentions from [legislative history] would justify a limitation on the 'plain meaning' of the statutory language"). BP Am. Prod. Co. v. Burton, 549 U.S. 84, 91 (2006) ("Unless otherwise defined, statutory terms are generally interpreted in accordance with their ordinary meaning"). The statute provides for a guarantee of no more than 3-year application pendency, by providing for an adjustment in the patent term:

First, "Subject to the limitations of paragraph (2)," means that the limitations of paragraph 2 apply to this paragraph's adjustment of patent term. That is, the day-to-day extension of patent term for pendency beyond the 3 year period is restricted as follows: 1) "B delay" cannot accrue for days of "A delay" that overlap, 2) the patent term cannot be extended beyond disclaimed term, and 3) the period of adjustment, including accrued "B delay," will be reduced for applicant delay.

Second, "if the issue of an original patent is delayed due to the failure of the United States Patent and Trademark Office to issue a patent within 3 years after the actual filing date of the application in the United States," meaning that the condition must first occur that the issuance of an original patent (35 U.S.C. 153), not merely the issuance of a notice of allowance, is delayed due to the Office's failure to issue a patent (sign and record a patent grant in the name of the United States), not merely mail a notice of allowance, within 3 years after the actual filing date of the application in the United States. This provision gives the Office a three-year period to issue a patent (sign and record a patent grant in the name of the United States) after the application filing date before an adjustment will accrue for "B delay."

Third, "not including- (i) any time consumed by continued examination of the application requested by the applicant under section 132(b); (ii) any time consumed by a proceeding under section 135(a), any time consumed by the imposition of an order under section 181, or any time consumed by appellate review by the Board of Patent Appeals and Interferences or by a Federal court; or (iii) any delay in the processing of the application by the United States Patent and Trademark Office requested by the applicant except as permitted by paragraph (3)(C), meaning that the three-year period does not include "any time consumed by" or "any delay in processing," as specified in clauses (i)-(iii). This language correlates to 35 U.S.C. 154(b)(1)(A) which likewise provides the basis for determining the period given the Office to take the specified actions before an adjustment will accrue for "A delay" (e.g., extended for 1 day after the day after the period specified in clauses (i)-(iv)).

Furthermore, these clauses are interpreted using their ordinary meanings. Nonetheless, the context of the legislation should be considered. As stated in Wyeth v. Dudas, 580 F.Supp.2d 138, 88 U.S.P.Q.2d 1538 (D.D.C., September 30, 2008), because the clock for calculating the 20-year patent term begins to run on the filing date, and not on the day the patent is actually granted, some of the effective term of a patent is consumed by the time it takes to prosecute the application. To mitigate this effect, the statute, *inter alia*, grants adjustments of patent term whenever the patent prosecution takes more than three years, regardless of the reason. The time consumed by prosecution of the application includes every day the application is pending before the Office from the actual filing date of the application in the United States until the date of issuance of the patent. The time it takes to prosecute the application ends not with the mailing of the notice of allowance, but with the issuance of the patent.

Thus, not including "any time consumed by" means not including any days used to prosecute the application as specified in clauses (i)-(ii)[2]. Clause (i) specifies "any time consumed by continued examination of the application requested by the applicant under section 132(b)." Clause (ii) specifies "any time consumed by a proceeding under section 135(a), any time consumed by the imposition of an order under section 181, or any time consumed by appellate review by the Board of Patent Appeals and Interferences or by a Federal court." "Time" in the context of this legislation throughout refers to days. "Consumed by" means used by or used in the course of. *Websters Collegiate Dictionary*, (11th ed.). The "any" signifies that the days consumed by are "any" of the days in the pendency of the application, and not just days that occur after the application has been pending for 3 years. As such, "any time consumed by" refers to any days used in the course of 1) continued examination of the application under section 132(b)(the filing of a request for continued examination), 2) interference proceedings, 3) secrecy orders, and 4) appellate review. Thus, that 3-year period given to the Office to issue a patent before an adjustment will accrue for "B delay" does not include any days used in the course of or any time consumed by clauses (i)-(ii), including any time consumed by the filing of a request for continued examination.

Fourth, "the term of the patent shall be extended 1 day for each day after the end of that 3-year period until the patent is issued" meaning that the consequence of this failure is that after "the end of that 3-year period" an additional 1 day of patent term

---

[2] Clause (iii) provides for not including (iii) any delay in the processing of the application by the United States Patent and Trademark Office requested by the applicant except as permitted by paragraph (3)(C), the term of the patent shall be extended 1 day for each day after the end of that 3-year period until the patent is issued. It is noted that paragraph (3)(C) allows with an adequate showing by applicant for reinstatement of no more than 3 months of the patent term reduced for applicant delay in taking in excess of three months to respond.

will accrue for each day that the application is pending until the day the patent is issued.

The "time consumed by" or used in the course of the continued examination of the application requested by the applicant under section 132(b) does not end until issuance of the patent. 35 U.S.C. 132(b) was enacted under the same title, the "American Inventors Protection Act of 1999," as 35 U.S.C. 154(b). Section 4403 of the AIPA amended 35 U.S.C. § 132 to provide, at the request of the applicant, for continued examination of an application for a fee (request for continued examination or RCE practice), without requiring the applicant to file a continuing application under 37 CFR 1.53(b) or a continued prosecution application (CPA) under 37 CFR 1.53(d). Thus, clause (i) is different from clause (ii) in that clause (i) refers to an examination process whereas clause (ii) refers to time consumed by proceedings (interferences, secrecy orders and appeals) in an application.

By nature, the time used in the course of the examination process continues to issuance of the patent. The examination process involves examining the application to ascertain whether it appears that the applicant is entitled to a patent under the law. See 35 U.S.C. 131 ("[t]he Director shall cause an examination to be made of the application and the alleged new invention; and if on such examination it appears that the applicant is entitled to a patent under the law, the Director shall issue a patent therefor"). If on examination it appears that the applicant is entitled to a patent, the USPTO issues a notice of allowance. See 35 U.S.C. 151 ("[i]f it appears that applicant is entitled to a patent under the law, a written notice of allowance of the application shall be given or mailed to the applicant"). If on examination it appears that the applicant is not entitled to a patent, the USPTO issues a notice (an Office action) stating the applicable rejection, objection, or other requirement, with the reasons therefor. See 35 U.S.C. 132 ("[w]henever, on examination, any claim for a patent is rejected, or any objection or requirement made, the Director shall notify the applicant thereof, stating the reasons for such rejection, or objection or requirement, together with such information and references as may be useful in judging of the propriety of continuing the prosecution of his application"). Neither the issuance of a notice of allowance nor the insurance of an Office action terminates the examination process. If after the issuance of an Office action under 35 U.S.C. 132 it subsequently appears that the applicant is entitled to a patent (e.g., in response to an argument or amendment by the applicant), the USPTO will issue a notice of allowance. Conversely, if after the issuance of a notice of allowance under 35 U.S.C. 151 it subsequently appears that the applicant is not entitled to a patent (e.g., in response to information provided by the applicant or uncovered by the USPTO), the USPTO will withdraw the application from issuance and issue an Office action under 35 U.S.C. 132 stating the applicable rejection, objection, or other requirement, with the reasons therefor.

As held in Blacklight Power, the USPTO's responsibility to issue a patent containing only patentable claims does not end with the issuance of a notice of allowance under 35 U.S.C. 151. See BlackLight Power, Inc. v. Rogan, 295 F.3d 1269, 1273 (Fed. Cir. 2002). Rather, if there is any substantial, reasonable ground within the

knowledge or cognizance of the Director as to why an application should not issue, it is the USPTO's duty to refuse to issue the patent even if a notice of allowance has previously been issued for the application. See In re Drawbaugh, 9 App. D.C. 219, 240 (D.C. Cir 1896).

Moreover, the applicant continues to be engaged in the examination process after the mailing of the notice of allowance. 37 CFR 1.56 makes clear that the applicant has a duty to disclose information material to patentability as long as the application is pending before the USPTO (i.e., until a patent is granted or the application is abandoned). See 37 CFR 1.56(a) ("[t]he duty to disclose information exists with respect to each pending claim until the claim is cancelled or withdrawn from consideration, or the application becomes abandoned"). 37 CFR 1.97 and 1.98 provide for the consideration of information submitted by the applicant after a notice of allowance has been mailed. See 37 CFR 1.97(d). In addition, 37 CFR 1.312 provides for the amendment of an application after a notice of allowance has been mailed. In fact, the request for examination procedures[3] permit the filing of a request for continued examination under 37 CFR 1.114 even after the issuance of a notice of allowance under 35 U.S.C. 151. See 37 CFR 1.114(a)(1).

As the examination process does not terminate with the mailing of the notice of allowance, the time consumed by continued examination requested by the applicant under section 132(b) does not terminate with the mailing of the notice of allowance. All the time the application is pending from the date of filing of the request for continued examination to the mailing of the notice of allowance through issuance of the patent is a consequence of the filing of the request for continued examination. Further action by the Office is pursuant to that request. Applicant has gotten further prosecution of the application without having to file a continuing application under 37 CFR 1.53(b).

All of the continued examination pursuant to the filing of the request by the applicant is properly excluded from the delay attributed to the Office. 35 U.S.C. 154(b)(1)(B)'s guarantee of a total application pendency of no more than three years provides for adjustment of the patent term for delay due to the Office's failure to issue the patent within three years, but does not include "any time consumed by continued examination requested by the applicant under 35 U.S.C. 132(b)." It is not necessary to mitigate the effect on the 20-year term to the extent that applicant has requested that the Office continue to examine the application via a request for continued examination, in lieu of, the filing of a continuing application under 37 CFR 1.53(b).

In this instance, a request for continued examination was filed on September 29, 2006, and the patent issued by virtue of that request on July 19, 2011. Pursuant to 35 U.S.C. 154(b)(1)(B)(i), the period beginning on September 29, 2006 and ending on July 19, 2011 is not included in calculating Office delay.

[3] Thus, on occasion, even where a request for continued examination has already been filed and a notice of allowance issued pursuant to that request, applicant may file a further request for continued examination.

**CONCLUSION**

In view of the above, the patent should have issued with a patent term adjustment of three hundred fifty (350) days.

The Office acknowledges submission of the $200.00 fee set forth in 37 CFR 1.18(e). No additional fees are required.

The Office will *sua sponte* issue a certificate of correction. Pursuant to 37 CFR 1.322, the Office will not issue a certificate of correction without first providing assignee or patentee an opportunity to be heard. Accordingly, patentees are given **one (1) month or thirty (30) days**, whichever is longer, from the mail date of this decision to respond. No extensions of time will be granted under § 1.136.

The application is being forwarded to the Certificates of Branch for issuance of a certificate of correction. The Office will issue a certificate of correction indicating that the term of the above-identified patent is extended or adjusted by **three hundred fifty (350)** days.

Telephone inquiries specific to this decision should be directed to the undersigned Petitions Attorney at (571) 272-3212.

Patricia Faison-Ball

Patricia Faison-Ball
Senior Petitions Attorney
Office of Petitions

Enclosure: Copy of DRAFT Certificate of Correction

DRAFT

UNITED STATES PATENT AND TRADEMARK OFFICE

# CERTIFICATE OF CORRECTION

PATENT : 7,981,448 B2

DATED : July 19, 2011

INVENTOR(S) : Leo E. Otterbein

It is certified that error appears in the above-identified patent and that said Letters Patent is hereby corrected as shown below:

On the cover page,

[*] Notice: Subject to any disclaimer, the term of this patent is extended or adjusted under 35 USC 154(b) by (590) days

Delete the phrase "by 590 days" and insert – by 350 days--

PTO/SB/66 (03-09)
Approved for use through 03/31/2012. OMB 0651-0016
U.S. Patent and Trademark Office: U.S. DEPARTMENT OF COMMERCE
Under the Paperwork Reduction Act of 1995, no persons are required to respond to a collection of information unless it displays valid OMB control number.

# PETITION TO ACCEPT UNINTENTIONALLY DELAYED PAYMENT OF MAINTENANCE FEE IN AN EXPIRED PATENT (37 CFR 1.378(c))

| Patent Number | Issue Date (YYYY-MM-DD) | Application Number | Filing Date (YYYY-MM-DD) | Docket Number (if applicable) |
|---|---|---|---|---|
| 7,266,812 | 2007-09-04 | 10/413,959 | 2003-04-15 | A35156 073621.0102 |

CAUTION: Maintenance fee (and surcharge, if any) payment must correctly identify: (1) the patent number and (2) the application number of the actual U.S. application leading to issuance of that patent to ensure the fee(s) is/are associated with the correct patent. 37 CFR 1.366(c) and (d).

SMALL ENTITY
☐ Patentee claims, or has previously claimed, small entity status. See 37 CFR 1.27.

LOSS OF ENTITLEMENT TO SMALL ENTITY STATUS
☐ Patentee is no longer entitled to small entity status. See 37 CFR 1.27(g)

| NOT Small Entity | | | Small Entity | | |
|---|---|---|---|---|---|
| | Fee | Code | | Fee | Code |
| ◉ | 3 ½ year | (1551) | ○ | 3 ½ year | (2551) |
| ○ | 7 ½ year | (1552) | ○ | 7 ½ year | (2552) |
| ○ | 11 ½ year | (1553) | ○ | 11 ½ year | (2553) |

SURCHARGE
The surcharge required by 37 CFR 1.20(i)(2) (Fee Code 1558) must be paid as a condition of accepting unintentionally delayed payment of the maintenance fee.

MAINTENANCE FEE (37 CFR 1.20(e)-(g))
The appropriate maintenance fee must be submitted with this petition.

STATEMENT
THE UNDERSIGNED CERTIFIES THAT THE DELAY IN PAYMENT OF THE MAINTENANCE FEE TO THIS PATENT WAS UNINTENTIONAL

PETITIONER(S) REQUEST THAT THE DELAYED PAYMENT OF THE MAINTENANCE FEE BE ACCEPTED AND THE PATENT REINSTATED

THIS PORTION MUST BE COMPLETED BY THE SIGNATORY OR SIGNATORIES

37 CFR 1.378(d) states: "Any petition under this section must be signed by an attorney or agent registered to practice before the Patent and Trademark Office, or by the patentee, the assignee, or other party in interest."

I certify, in accordance with 37 CFR 1.4(d)(4) that I am

◉ An attorney or agent registered to practice before the Patent and Trademark Office

○ A sole patentee

○ A joint patentee; I certify that I am authorized to sign this submission on behalf of all the other patentees.

○ A joint patentee; all of whom are signing this e-petition

○ The assignee of record of the entire interest

Under the Paperwork Reduction Act of 1995, no persons are required to respond to a collection of information unless it displays valid OMB control number.

| Patent Practitioner | | | |
|---|---|---|---|
| A signature of the applicant or representative is required in accordance with 37 CFR 1.33 and 10.18. Please see 37 CFR 1.4(d) for the form of the signature | | | |
| Signature | /Kendal M. Sheets/ | Date (YYYY-MM-DD) | 2011-09-29 |
| Name | Kendal M. Sheets | Registration Number | 47077 |

This collection of information is required by 37 CFR 1.378(c). The information is required to obtain or retain a benefit by the public which is to file (and by the USPTO to process) an application. Confidentiality is governed by 35 U.S.C. 122 and 37 CFR 1.11 and 1.14. This collection is estimated to take 1 hour to complete, including gathering, preparing, and submitting the completed application form to the USPTO. Time will vary depending upon the individual case. Any comments on the amount of time you require to complete this form and/ or suggestions for reducing this burden, should be sent to the Chief Information Officer, U.S. Patent and Trademark Office, U.S. Department of Commerce, P.O. Box 1450, Alexandria, VA 22313-1450. DO NOT SEND FEES OR COMPLETED FORMS TO THIS ADDRESS. **This form can only be used when in conjunction with EFS-Web. If this form is mailed to the USPTO, it may cause delays in reinstating the patent.**

# Privacy Act Statement

The Privacy Act of 1974 (P.L. 93-579) requires that you be given certain information in connection with your submission of the attached form related to a patent application or patent. Accordingly, pursuant to the requirements of the Act, please be advised that: (1) the general authority for the collection of this information is 35 U.S.C. 2(b)(2); (2) furnishing of the information solicited is voluntary; and (3) the principal purpose for which the information is used by the U.S. Patent and Trademark Office is to process and/or examine your submission related to a patent application or patent. If you do not furnish the requested information, the U.S. Patent and Trademark Office may not be able to process and/or examine your submission, which may result in termination of proceedings or abandonment of the application or expiration of the patent.

The information provided by you in this form will be subject to the following routine uses:

1. The information on this form will be treated confidentially to the extent allowed under the Freedom of Information Act (5 U.S.C. 552) and the Privacy Act (5 U.S.C. 552a). Records from this system of records may be disclosed to the Department of Justice to determine whether the Freedom of Information Act requires disclosure of these records.

2. A record from this system of records may be disclosed, as a routine use, in the course of presenting evidence to a court, magistrate, or administrative tribunal, including disclosures to opposing counsel in the course of settlement negotiations.

3. A record in this system of records may be disclosed, as a routine use, to a Member of Congress submitting a request involving an individual, to whom the record pertains, when the individual has requested assistance from the Member with respect to the subject matter of the record.

4. A record in this system of records may be disclosed, as a routine use, to a contractor of the Agency having need for the information in order to perform a contract. Recipients of information shall be required to comply with the requirements of the Privacy Act of 1974, as amended, pursuant to 5 U.S.C. 552a(m).

5. A record related to an International Application filed under the Patent Cooperation Treaty in this system of records may be disclosed, as a routine use, to the International Bureau of the World Intellectual Property Organization, pursuant to the Patent Cooperation Treaty.

6. A record in this system of records may be disclosed, as a routine use, to another federal agency for purposes of National Security review (35 U.S.C. 181) and for review pursuant to the Atomic Energy Act (42 U.S.C. 218(c)).

7. A record from this system of records may be disclosed, as a routine use, to the Administrator, General Services, or his/her designee, during an inspection of records conducted by GSA as part of that agency's responsibility to recommend improvements in records management practices and programs, under authority of 44 U.S.C. 2904 and 2906. Such disclosure shall be made in accordance with the GSA regulations governing inspection of records for this purpose, and any other relevant (i.e., GSA or Commerce) directive. Such disclosure shall not be used to make determinations about individuals.

8. A record from this system of records may be disclosed, as a routine use, to the public after either publication of the application pursuant to 35 U.S.C. 122(b) or issuance of a patent pursuant to 35 U.S.C. 151. Further, a record may be disclosed, subject to the limitations of 37 CFR 1.14, as a routine use, to the public if the record was filed in an application which became abandoned or in which the proceedings were terminated and which application is referenced by either a published application, an application open to public inspections or an issued patent.

9. A record from this system of records may be disclosed, as a routine use, to a Federal, State, or local law enforcement agency, if the USPTO becomes aware of a violation or potential violation of law or regulation.

UNITED STATES PATENT AND TRADEMARK OFFICE

Commissioner for Patents
United States Patent and Trademark Office
P.O. Box 1450
Alexandria, VA 22313-1450
www.uspto.gov

In re Patent No. 7266812
Issue Date: September 4,2007
Application No. 10413959
Filed: April 15,2003
Attorney Docket No. A35156 073621.0102

:
:DECISION GRANTING PETITION
:UNDER 37 CFR 1.378(c)
:

This is a decision on the electronic petition, filed September 29,2011 ,under 37 CFR 1.378(c) to accept the unintentionally delayed payment of the 3.5 year maintenance fee for the above-identified patent.

The petition is **GRANTED**.

The maintenance fee is accepted, and the above-identified patent reinstated as of September 29,2011 . This decision also constitutes notice that the fee has been accepted. An electronic copy of the petition and this decision has been created as an entry in the Image File Wrapper. Nevertheless, petitioner should print and retain an independent copy.

Telephone inquiries related to this electronic decision should be directed to the Electronic Business Center at 1-866-217-9197.

UNITED STATES PATENT AND TRADEMARK OFFICE

COMMISSIONER FOR PATENTS
UNITED STATES PATENT AND TRADEMARK OFFICE
P.O. BOX 1450
ALEXANDRIA, VA 22313-1450
www.uspto.gov

K&L Gates LLP
P.O. Box 1135
CHICAGO IL 60690

MAILED

AUG 3 1 2010

OFFICE OF PETITIONS

In re Patent No. 7,727,061
Issued: June 1, 2010
Application No. 10/414,187
Filed: April 14, 2003
Dkt. No.: 3718611-01982

: DECISION ON APPLICATION FOR
: PATENT TERM ADJUSTMENT and
: NOTICE OF INTENT TO ISSUE
: CERTIFICATE OF CORRECTION
:

This is a decision on the petition filed on July 30, 2010, which is being treated under 37 CFR 1.705(d) as a request that the patent term adjustment indicated on the above-identified patent be corrected to indicate that the term of the above-identified patent is extended or adjusted by 1,131 days.

The petition to correct the patent term adjustment indicated on the above-identified patent to indicate that the term of the above-identified patent is extended or adjusted by 1,131 days is **GRANTED**.

The Office acknowledges the previous submission of the $200.00 fee set forth in 37 CFR 1.18(e). No additional fees are required.

Nothing in this decision shall be construed as a waiver of the requirement of 35 U.S.C. 154(b)(4) that any civil action by an applicant dissatisfied with a determination made by the Director under 35 U.S.C. 154(b)(3) be filed in the United States District Court for the District of Columbia within 180 days after the grant of the patent.

The application is being forwarded to the Certificates of Corrections Branch for issuance of a certificate of correction. The Office will issue a certificate of correction indicating that the term of the above-identified patent is extended or adjusted by **1,131** days.

Telephone inquiries specific to this matter should be directed to the undersigned at (571) 272-3205.

*/ALESIA M. BROWN/*

Alesia M. Brown
Senior Petitions Attorney
Office of Petitions

Enclosure: Copy of DRAFT Certificate of Correction

UNITED STATES PATENT AND TRADEMARK OFFICE

# CERTIFICATE OF CORRECTION

PATENT : 7,727,061

DATED : **June 1, 2010** **DRAFT**

INVENTOR(S) : Taylor

It is certified that error appears in the above-identified patent and that said Letters Patent is hereby corrected as shown below:

On the cover page,

[*] Notice: Subject to any disclaimer, the term of this patent is extended or adjusted under 35 USC 154(b) by 1096 days

Delete the phrase "by 1096 days" and insert – by 1131 days--

## SPE RESPONSE FOR CERTIFICATE OF CORRECTION

**DATE** : 10/5/10

**Paper No.:** _____

**TO SPE OF** : ART UNIT 2432

**SUBJECT** : Request for Certificate of Correction for Appl. No.: 10/414239 Patent No.: 7640582 B2

Please respond to this request for a certificate of correction within 7 days.

**FOR IFW FILES:**

Please review the requested changes/corrections as shown in the **COCIN** document(s) in the IFW application image. No new matter should be introduced, nor should the scope or meaning of the claims be changed.

Please complete the response (see below) and forward the completed response to scanning using document code **COCX**.

**FOR PAPER FILES:**

Please review the requested changes/corrections as shown in the attached certificate of correction. Please complete this form (see below) and forward it with the file to:

**Certificates of Correction Branch (CofC)**
**Randolph Square – 9D10-A**
**Palm Location 7580**

Virginia Tolbert
**Certificates of Correction Branch**
571-272-0460

**Thank You For Your Assistance**

**The request for issu**
Note your decision on the approp

- ☐ **Approve**
- ☐ **Approve**
- ☐ **Denied**

**Comments:** _____

DENIED: Petition under 37 CFR 1.78a(3) is required as the original statement did not specify the type of relateness of co-pending application. Any benefit claim that does not both identify a prior application by its application number and specify a relationship between the applications will not be considered to contain a specific reference to a prior application as required by 35 U.S.C. 120. Such benefit claim may not be recognized by the Office and may not be included on the filing receipt even if the claim appears in the first sentence(s) of the specification or an application data sheet. To specify the relationship between the applications, applicant must specify whether the application is a continuation, divisional, or continuation-in-part of the prior application.

## SPE RESPONSE FOR CERTIFICATE OF CORRECTION

DATE : June 20, 2011

TO SPE OF : ART UNIT 1786

SUBJECT : Request for Certificate of Correction for Appl. No.: 10/414266 Patent No.: 7935415

CofC mailroom date: 6-10-11

Please respond to this request for a certificate of correction within 7 days.

**FOR IFW FILES:**

Please review the requested changes/corrections as shown in the **COCIN** document(s) in the IFW application image. No new matter should be introduced, nor should the scope or meaning of the claims be changed.

Please complete the response (see below) and forward the completed response to scanning using document code **COCX**.

**FOR PAPER FILES:**

Please review the requested changes/corrections as shown in the attached certificate of correction. Please complete this form (see below) and forward it with the file to:

**Certificates of Correction Branch (CofC)**
**Randolph Square – 9D10-A**
**Palm Location 7580**

Note: _____

_____

**Magdalene Talley**
**Certificates of Correction Branch**
**571-272-0423**

**Thank You For Your Assistance**

**The request for issuing the above-identified correction(s) is hereby:**
Note your decision on the appropriate box.

- ☒ **Approved** — **All** changes apply.
- ☐ **Approved in Part** — Specify below which changes **do not** apply.
- ☐ **Denied** — State the reasons for denial below.

**Comments:** All changes are approved.

/Jennifer A. Chriss/, Supervisory Patent Examiner, AU 1786

UNITED STATES PATENT AND TRADEMARK OFFICE

UNITED STATES DEPARTMENT OF COMMERCE
United States Patent and Trademark Office
Address: COMMISSIONER FOR PATENTS
P.O. Box 1450
Alexandria, Virginia 22313-1450
www.uspto.gov

| APPLICATION NO. | FILING DATE | FIRST NAMED INVENTOR | ATTORNEY DOCKET NO. | CONFIRMATION NO. |
|---|---|---|---|---|
| 10/414,336 | 04/15/2003 | John A. Martin | PEN0001-US | 6358 |

11850 7590 12/15/2011
SNR DENTON US LLP (Sophir-All Others)
ATTN: Eric Sophir
P.O. BOX 061080
CHICAGO, IL 60606-1080

| EXAMINER |
|---|
| ALTSCHUL, AMBER L |

| ART UNIT | PAPER NUMBER |
|---|---|
| 3686 | |

| NOTIFICATION DATE | DELIVERY MODE |
|---|---|
| 12/15/2011 | ELECTRONIC |

**Please find below and/or attached an Office communication concerning this application or proceeding.**

The time period for reply, if any, is set in the attached communication.

Notice of the Office communication was sent electronically on above-indicated "Notification Date" to the following e-mail address(es):

eric.sophir@snrdenton.com
patents@snrdenton.com
SG.Sophir.AllOthers@snrdenton.com

UNITED STATES PATENT AND TRADEMARK OFFICE

Commissioner for Patents
United States Patent and Trademark Office
P.O. Box 1450
Alexandria, VA 22313-1450
www.uspto.gov

SNR DENTON US LLP (Sophir-All Others)
ATTN: Eric Sophir
P.O. Box 061080
Chicago, IL 60606-1080

| | | |
|---|---|---|
| In re Application of: John A. Martin | : | **DECISION ON PETITION** |
| Application No. 10/414,336 | : | **TO EXPUNGE UNDER** |
| Filed: April 15, 2003 | : | **37 CFR 1.59(b)** |
| Attorney Docket No. 16224-105001 | : | |
| For: METHODS FOR ADMINISTERING | : | |
| LOAN PREMIUMS IN A PENSION | : | |
| INSURANCE PROGRAM | : | |

This is a decision on applicant's petition under 37 CFR 1.59(b), filed on August 22, 2005, requesting that material be expunged from the record of the U.S. Patent and Trademark Office.

The petition is **DISMISSED**.

Applicant alleges that the material submitted in conjunction with the Information Disclosure Statement of August 22, 2005 contains proprietary information, and therefore requests that the submitted material be expunged from the record of the U.S. Patent and Trademark Office.

According to MPEP § 724.05(I), a grantable petition to expunge proprietary information under 37 CFR § 1.59(b) should be submitted at the time of filing the proprietary information, and must include each of the following:

(A) a clear identification of the information to be expunged without disclosure of the details thereof;

(B) a clear statement that the information to be expunged is trade secret material, proprietary material, and/or subject to a protective order, and that the information has not been otherwise made public;

(C) a commitment on the part of the petitioner to retain such information for the period of any patent with regard to which such information is submitted;

(D) a statement that the petition to expunge is being submitted by, or on behalf of, the party in interest who originally submitted the information;

(E) the fee as set forth in 37 CFR 1.17(g) for a petition under 37 CFR 1.59(b).

Additionally, a petition to expunge proprietary information under 37 CFR § 1.59(b) will *only* be granted if the information has been deemed to *not* be material to patentability. If the information *is* found to be material to patentability, any petition to expunge the information will be denied.

A review of the record shows that applicant's petition was filed at the time the information was submitted, and meets criteria (A) and (E) of the above requirements. However, applicant has failed to meet criteria (B), (C), and (D) of these requirements, because the petition fails to state, respectively, that (1) the information has not been otherwise made public, that (2) the petitioner will retain the information for the period of the patent, and that (3) the petition to expunge is being submitted by, or on behalf of, the party in interest who originally submitted the information.

Additionally, the information sought to be expunged from the record has been deemed to be material to patentability, which is defined as any information which the examiner considers as being important to determination of patentability of the claims.

Any questions or comments with respect to this decision should be directed to Supervisory Patent Examiner Jerry O'Connor, at (571) 272-6787.

Wynn W. Coggins, Director
Patent Technology Center 3600
(571) 272-5350

wc/gjoc: 12/5/2011

LM

UNITED STATES PATENT AND TRADEMARK OFFICE

UNITED STATES DEPARTMENT OF COMMERCE
United States Patent and Trademark Office
Address: COMMISSIONER FOR PATENTS
P.O. Box 1450
Alexandria, Virginia 22313-1450
www.uspto.gov

| APPLICATION NO. | FILING DATE | FIRST NAMED INVENTOR | ATTORNEY DOCKET NO. | CONFIRMATION NO. |
|---|---|---|---|---|
| 10/414,355 | 04/15/2003 | John A. Martin | PEN0005-US | 6343 |

11850 7590 12/15/2011
SNR DENTON US LLP (Sophir-All Others)
ATTN: Eric Sophir
P.O. BOX 061080
CHICAGO, IL 60606-1080

| EXAMINER |
|---|
| ALTSCHUL, AMBER L |

| ART UNIT | PAPER NUMBER |
|---|---|
| 3686 | |

| NOTIFICATION DATE | DELIVERY MODE |
|---|---|
| 12/15/2011 | ELECTRONIC |

**Please find below and/or attached an Office communication concerning this application or proceeding.**

The time period for reply, if any, is set in the attached communication.

Notice of the Office communication was sent electronically on above-indicated "Notification Date" to the following e-mail address(es):

eric.sophir@snrdenton.com
patents@snrdenton.com
SG.Sophir.AllOthers@snrdenton.com

UNITED STATES PATENT AND TRADEMARK OFFICE

Commissioner for Patents
United States Patent and Trademark Office
P.O. Box 1450
Alexandria, VA 22313-1450
www.uspto.gov

SNR DENTON US LLP (Sophir-All Others)
ATTN: Eric Sophir
P.O. Box 061080
Chicago, IL 60606-1080

| | | |
|---|---|---|
| In re Application of: John A. Martin | : | **DECISION ON PETITION** |
| Application No. 10/414,355 | : | **TO EXPUNGE UNDER** |
| Filed: April 15, 2003 | : | **37 CFR 1.59(b)** |
| Attorney Docket No. 16224-105005 | : | |
| For: METHODS FOR VALIDATING | : | |
| PARTICIPANTS IN A PENSION | : | |
| INSURANCE PROGRAM | : | |

This is a decision on applicant's petition under 37 CFR 1.59(b), filed on August 22, 2005, requesting that material be expunged from the record of the U.S. Patent and Trademark Office.

The petition is **DISMISSED**.

Applicant alleges that the material submitted conjunction with the Information Disclosure Statement of August 22, 2005 contains proprietary information, and therefore requests that the submitted material be expunged from the record of the U.S. Patent and Trademark Office.

According to MPEP § 724.05(I), a grantable petition to expunge proprietary information under 37 CFR § 1.59(b) should be submitted at the time of filing the proprietary information, and must include each of the following:

(A) a clear identification of the information to be expunged without disclosure of the details thereof;

(B) a clear statement that the information to be expunged is trade secret material, proprietary material, and/or subject to a protective order, and that the information has not been otherwise made public;

(C) a commitment on the part of the petitioner to retain such information for the period of any patent with regard to which such information is submitted;

(D) a statement that the petition to expunge is being submitted by, or on behalf of, the party in interest who originally submitted the information;

(E) the fee as set forth in 37 CFR 1.17(g) for a petition under 37 CFR 1.59(b).

Additionally, a petition to expunge proprietary information under 37 CFR § 1.59(b) will *only* be granted if the information has been deemed to *not* be material to patentability. If the information *is* found to be material to patentability, any petition to expunge the information will be denied.

A review of the record shows that applicant's petition was filed at the time the information was submitted, and meets criteria (A) and (E) of the above requirements. However, applicant has failed to meet criteria (B), (C), and (D) of these requirements, because the petition fails to state, respectively, that (1) the information has not been otherwise made public, that (2) the petitioner will retain the information for the period of the patent, and that (3) the petition to expunge is being submitted by, or on behalf of, the party in interest who originally submitted the information.

Additionally, the information sought to be expunged from the record has been deemed to be material to patentability, which is defined as any information which the examiner considers as being important to determination of patentability of the claims.

Any questions or comments with respect to this decision should be directed to Supervisory Patent Examiner Jerry O'Connor, at (571) 272-6787.

Wynn W. Coggins, Director
Patent Technology Center 3600
(571) 272-5350

wc/gjoc: 12/5/2011
LM

UNITED STATES PATENT AND TRADEMARK OFFICE

UNITED STATES DEPARTMENT OF COMMERCE
United States Patent and Trademark Office
Address: COMMISSIONER FOR PATENTS
P.O. Box 1450
Alexandria, Virginia 22313-1450
www.uspto.gov

| APPLICATION NO. | FILING DATE | FIRST NAMED INVENTOR | ATTORNEY DOCKET NO. | CONFIRMATION NO. |
|---|---|---|---|---|
| 10/414,364 | 04/15/2003 | John A. Martin | PEN0003-US | 7140 |

11850 7590 12/15/2011
SNR DENTON US LLP (Sophir-All Others)
ATTN: Eric Sophir
P.O. BOX 061080
CHICAGO, IL 60606-1080

| EXAMINER |
|---|
| ALTSCHUL, AMBER L |

| ART UNIT | PAPER NUMBER |
|---|---|
| 3686 | |

| NOTIFICATION DATE | DELIVERY MODE |
|---|---|
| 12/15/2011 | ELECTRONIC |

**Please find below and/or attached an Office communication concerning this application or proceeding.**

The time period for reply, if any, is set in the attached communication.

Notice of the Office communication was sent electronically on above-indicated "Notification Date" to the following e-mail address(es):

eric.sophir@snrdenton.com
patents@snrdenton.com
SG.Sophir.AllOthers@snrdenton.com

UNITED STATES PATENT AND TRADEMARK OFFICE

Commissioner for Patents
United States Patent and Trademark Office
P.O. Box 1450
Alexandria, VA 22313-1450
www.uspto.gov

SNR DENTON US LLP (Sophir-All Others)
ATTN: Eric Sophir
P.O. Box 061080
Chicago, IL 60606-1080

| | | |
|---|---|---|
| In re Application of: John A. Martin | : | **DECISION ON PETITION** |
| Application No. 10/414,364 | : | **TO EXPUNGE UNDER** |
| Filed: April 15, 2003 | : | **37 CFR 1.59(b)** |
| Attorney Docket No. 16224-105003 | : | |
| For: PENSION INSURANCE PROGRAM | : | |
| METHODS AND SYSTEMS | : | |

This is a decision on applicant's petition under 37 CFR 1.59(b), filed on August 22, 2005, requesting that material be expunged from the record of the U.S. Patent and Trademark Office.

The petition is **DISMISSED**.

Applicant alleges that the material submitted in conjunction with the Information Disclosure Statement of August 22, 2005 contains proprietary information, and therefore requests that the submitted material be expunged from the record of the U.S. Patent and Trademark Office.

According to MPEP § 724.05(I), a grantable petition to expunge proprietary information under 37 CFR § 1.59(b) should be submitted at the time of filing the proprietary information, and must include each of the following:

(A) a clear identification of the information to be expunged without disclosure of the details thereof;

(B) a clear statement that the information to be expunged is trade secret material, proprietary material, and/or subject to a protective order, and that the information has not been otherwise made public;

(C) a commitment on the part of the petitioner to retain such information for the period of any patent with regard to which such information is submitted;

(D) a statement that the petition to expunge is being submitted by, or on behalf of, the party in interest who originally submitted the information;

(E) the fee as set forth in 37 CFR 1.17(g) for a petition under 37 CFR 1.59(b).

Additionally, a petition to expunge proprietary information under 37 CFR § 1.59(b) will *only* be granted if the information has been deemed to *not* be material to patentability. If the information *is* found to be material to patentability, any petition to expunge the information will be denied.

A review of the record shows that applicant's petition was filed at the time the information was submitted, and meets criteria (A) and (E) of the above requirements. However, applicant has failed to meet criteria (B), (C), and (D) of these requirements, because the petition fails to state, respectively, that (1) the information has not been otherwise made public, that (2) the petitioner will retain the information for the period of the patent, and that (3) the petition to expunge is being submitted by, or on behalf of, the party in interest who originally submitted the information.

Additionally, the information sought to be expunged from the record has been deemed to be material to patentability, which is defined as any information which the examiner considers as being important to determination of patentability of the claims.

Any questions or comments with respect to this decision should be directed to Supervisory Patent Examiner Jerry O'Connor, at (571) 272-6787.

Wynn W. Coggins, Director
Patent Technology Center 3600
(571) 272-5350

wc/gjoc: 12/5/2011

LM

UNITED STATES PATENT AND TRADEMARK OFFICE

UNITED STATES DEPARTMENT OF COMMERCE
United States Patent and Trademark Office
Address: COMMISSIONER FOR PATENTS
P.O. Box 1450
Alexandria, Virginia 22313-1450
www.uspto.gov

| APPLICATION NO. | FILING DATE | FIRST NAMED INVENTOR | ATTORNEY DOCKET NO. | CONFIRMATION NO. |
|---|---|---|---|---|
| 10/414,365 | 04/15/2003 | John A. Martin | PEN0002-US | 7136 |

11850 7590 12/15/2011
SNR DENTON US LLP (Sophir-All Others)
ATTN: Eric Sophir
P.O. BOX 061080
CHICAGO, IL 60606-1080

| EXAMINER |
|---|
| ALTSCHUL, AMBER L |

| ART UNIT | PAPER NUMBER |
|---|---|
| 3686 | |

| NOTIFICATION DATE | DELIVERY MODE |
|---|---|
| 12/15/2011 | ELECTRONIC |

**Please find below and/or attached an Office communication concerning this application or proceeding.**

The time period for reply, if any, is set in the attached communication.

Notice of the Office communication was sent electronically on above-indicated "Notification Date" to the following e-mail address(es):

eric.sophir@snrdenton.com
patents@snrdenton.com
SG.Sophir.AllOthers@snrdenton.com

UNITED STATES PATENT AND TRADEMARK OFFICE

Commissioner for Patents
United States Patent and Trademark Office
P.O. Box 1450
Alexandria, VA 22313-1450
www.uspto.gov

SNR DENTON US LLP (Sophir-All Others)
ATTN: Eric Sophir
P.O. Box 061080
Chicago, IL 60606-1080

| | | |
|---|---|---|
| In re Application of: John A. Martin | : | **DECISION ON PETITION** |
| Application No. 10/414,365 | : | **TO EXPUNGE UNDER** |
| Filed: April 15, 2003 | : | **37 CFR 1.59(b)** |
| Attorney Docket No. 16224-105002 | : | |
| For: METHODS FOR ADMINISTERING | : | |
| CLAIMS IN A PENSION | : | |
| INSURANCE PROGRAM | : | |

This is a decision on applicant's petition under 37 CFR 1.59(b), filed on August 22, 2005, requesting that material be expunged from the record of the U.S. Patent and Trademark Office.

The petition is **DISMISSED**.

Applicant alleges that the material submitted in conjunction with the Information Disclosure Statement of August 22, 2005 contains proprietary information, and therefore requests that the submitted material be expunged from the record of the U.S. Patent and Trademark Office.

According to MPEP § 724.05(I), a grantable petition to expunge proprietary information under 37 CFR § 1.59(b) should be submitted at the time of filing the proprietary information, and must include each of the following:

(A) a clear identification of the information to be expunged without disclosure of the details thereof;

(B) a clear statement that the information to be expunged is trade secret material, proprietary material, and/or subject to a protective order, and that the information has not been otherwise made public;

(C) a commitment on the part of the petitioner to retain such information for the period of any patent with regard to which such information is submitted;

(D) a statement that the petition to expunge is being submitted by, or on behalf of, the party in interest who originally submitted the information;

(E) the fee as set forth in 37 CFR 1.17(g) for a petition under 37 CFR 1.59(b).

Additionally, a petition to expunge proprietary information under 37 CFR § 1.59(b) will *only* be granted if the information has been deemed to *not* be material to patentability. If the information *is* found to be material to patentability, any petition to expunge the information will be denied.

A review of the record shows that applicant's petition was filed at the time the information was submitted, and meets criteria (A) and (E) of the above requirements. However, applicant has failed to meet criteria (B), (C), and (D) of these requirements, because the petition fails to state, respectively, that (1) the information has not been otherwise made public, that (2) the petitioner will retain the information for the period of the patent, and that (3) the petition to expunge is being submitted by, or on behalf of, the party in interest who originally submitted the information.

Additionally, the information sought to be expunged from the record has been deemed to be material to patentability, which is defined as any information which the examiner considers as being important to determination of patentability of the claims.

Any questions or comments with respect to this decision should be directed to Supervisory Patent Examiner Jerry O'Connor, at (571) 272-6787.

Wynn W. Coggins, Director
Patent Technology Center 3600
(571) 272-5350

wc/gjoc: 12/5/2011
LM

UNITED STATES PATENT AND TRADEMARK OFFICE

Commissioner for Patents
United States Patent and Trademark Office
P.O. Box 1450
Alexandria, VA 22313-1450
www.uspto.gov

Vierra Magen Marcus & DeNiro LLP
Suite 2500
575 Market Street
San Francisco, CA 94105

MAILED
JAN 10 2011
OFFICE OF PETITIONS

| | | |
|---|---|---|
| In re Patent of Lewis et al. | : | |
| Patent No. 6,950,177 | : | |
| Issue Date: September 27, 2005 | : | Letter |
| Application No. 10/414,450 | : | |
| Filing Date: April 15, 2003 | : | |
| Attorney Docket No. TOOLZ-01109US0 | : | |

This is a notice regarding your request for acceptance of a fee deficiency submission under 37 CFR 1.28(c) filed September 16, 2010.

The deficiency payment of $490 is hereby accepted.

The change of status to large entity has been entered and made of record.

Patentees indicate a late payment of $130 should be charged to the deposit account identified in the request. However, a $130 late payment is unnecessary. Therefore, the Office has not charged the $130 fee to the deposit account.

Telephone inquiries regarding this communication should be directed to Petitions Attorney Steven Brantley at (571) 272-3203.

Charles Steven Brantley
Senior Petitions Attorney
Office of Petitions

UNITED STATES PATENT AND TRADEMARK OFFICE

UNITED STATES DEPARTMENT OF COMMERCE
United States Patent and Trademark Office
Address: COMMISSIONER FOR PATENTS
P.O. Box 1450
Alexandria, Virginia 22313-1450
www.uspto.gov

| APPLICATION NO. | FILING DATE | FIRST NAMED INVENTOR | ATTORNEY DOCKET NO. | CONFIRMATION NO. |
|---|---|---|---|---|
| 10/414,493 | 04/16/2003 | John R. Plachetka | 7569/80252 | 6021 |

66991 7590 08/19/2010
LAW OFFICE OF MICHAEL A. SANZO, LLC
15400 CALHOUN DR.
SUITE 125
ROCKVILLE, MD 20855

| EXAMINER |
|---|
| ROBERTS, LEZAH |

| ART UNIT | PAPER NUMBER |
|---|---|
| 1612 | |

| MAIL DATE | DELIVERY MODE |
|---|---|
| 08/19/2010 | PAPER |

**Please find below and/or attached an Office communication concerning this application or proceeding.**

The time period for reply, if any, is set in the attached communication.

UNITED STATES PATENT AND TRADEMARK OFFICE

AUG 1 9 2010

Commissioner for Patents
United States Patent and Trademark Office
P.O. Box 1450
Alexandria, VA 22313-1450
www.uspto.gov

LAW OFFICE OF MICHAEL A. SANZO, LLC
15400 CALHOUN DR.
SUITE 125
ROCKVILLE MD 20855

In re Application of:
John R. Plachetka
Serial No.: 10/414,493
Filed: April 16, 2003
Attorney Docket No.: **7569/80252**

: PETITION DECISION

This is in response to the petition under 37 CFR § 1.59(b), filed August 3, 2010, to expunge information from the above identified application. This application has not been allowed.

Petitioner requests that the documents containing information subject to a Protective Order submitted to the Patent Office on August 3, 2010, be expunged from the record. Petitioner states either: (A) that the information contains trade secret material, proprietary material and/or material that is subject to a protective order which has not been made public; or (B) that the information submitted was unintentionally submitted and the failure to obtain its return would cause irreparable harm to the party who submitted the information or to the party in interest on whose behalf the information was submitted, and the information has not otherwise been made public. The petition fee set forth in 37 CFR § 1.17(g) has been paid.

This is an examined application which is currently under non-final rejection. As such the information provided has been reviewed, in part, but proceedings in the application have not been terminated. As stated in M.P.E.P. 724, upon allowance or other action closing prosecution in an application, petition may be made for return of Proprietary information. The information cannot be expunged at this time.

The petition is **DISMISSED**. Petitioner may resubmit the petition subsequent to a Notice of Allowability or *ex parte Quayle* action being mailed in the application. No additional petition fee will be required at that time.

Should there be any questions about this decision please contact Marianne C. Seidel by letter addressed to Director, TC 1600, at the address listed above, or by telephone at 571-272-0584 or by facsimile sent to the general Office facsimile number, 703-872-9306.

Marianne C. Seidel
Quality Assurance Specialist
Technology Center 1600

UNITED STATES PATENT AND TRADEMARK OFFICE

UNITED STATES DEPARTMENT OF COMMERCE
United States Patent and Trademark Office
Address: COMMISSIONER FOR PATENTS
P.O. Box 1450
Alexandria, Virginia 22313-1450
www.uspto.gov

| APPLICATION NO. | FILING DATE | FIRST NAMED INVENTOR | ATTORNEY DOCKET NO. | CONFIRMATION NO. |
|---|---|---|---|---|
| 10/414,493 | 04/16/2003 | John R. Plachetka | 7569/80252 | 6021 |

66991 7590 11/08/2010
LAW OFFICE OF MICHAEL A. SANZO, LLC
15400 CALHOUN DR.
SUITE 125
ROCKVILLE, MD 20855

| EXAMINER |
|---|
| ROBERTS, LEZAH |

| ART UNIT | PAPER NUMBER |
|---|---|
| 1612 | |

| MAIL DATE | DELIVERY MODE |
|---|---|
| 11/08/2010 | PAPER |

**Please find below and/or attached an Office communication concerning this application or proceeding.**

The time period for reply, if any, is set in the attached communication.

UNITED STATES PATENT AND TRADEMARK OFFICE

Commissioner for Patents
United States Patent and Trademark Office
P.O. Box 1450
Alexandria, VA 22313-1450
www.uspto.gov

NOV 0 8 2010

LAW OFFICE OF MICHAEL A. SANZO, LLC
15400 CALHOUN DR.
SUITE 125
ROCKVILLE MD 20855

| | |
|---|---|
| In re Application of: | : |
| John R. Plachetka | : |
| Serial No.: 10/414,493 | : PETITION DECISION |
| Filed: April 16, 2003 | : |
| Attorney Docket No.: **7569/80252** | |

This is in response to the petition under 37 CFR § 1.59(b), filed October 25, 2010, to expunge information from the above identified application. This application has not been allowed.

Petitioner requests that the documents containing information subject to a Protective Order submitted to the Patent Office on October 25, 2010, be expunged from the record. Petitioner states either: (A) that the information contains trade secret material, proprietary material and/or material that is subject to a protective order which has not been made public; or (B) that the information submitted was unintentionally submitted and the failure to obtain its return would cause irreparable harm to the party who submitted the information or to the party in interest on whose behalf the information was submitted, and the information has not otherwise been made public. The petition fee set forth in 37 CFR § 1.17(g) has been paid.

This is an examined application which is currently under non-final rejection. As such the information provided has been reviewed, in part, but proceedings in the application have not been terminated. As stated in M.P.E.P. 724, upon allowance or other action closing prosecution in an application, petition may be made for return of Proprietary information. The information cannot be expunged at this time.

The petition is **DISMISSED**. Petitioner may resubmit the petition subsequent to a Notice of Allowability or *ex parte Quayle* action being mailed in the application. No additional petition fee will be required at that time.

Should there be any questions about this decision please contact Marianne C. Seidel by letter addressed to Director, TC 1600, at the address listed above, or by telephone at 571-272-0584 or by facsimile sent to the general Office facsimile number, 571-273-8300.

Marianne C. Seidel
Quality Assurance Specialist
Technology Center 1600

UNITED STATES PATENT AND TRADEMARK OFFICE

UNITED STATES DEPARTMENT OF COMMERCE
United States Patent and Trademark Office
Address: COMMISSIONER FOR PATENTS
P.O. Box 1450
Alexandria, Virginia 22313-1450
www.uspto.gov

| APPLICATION NO. | FILING DATE | FIRST NAMED INVENTOR | ATTORNEY DOCKET NO. | CONFIRMATION NO. |
|---|---|---|---|---|
| 10/414,493 | 04/16/2003 | John R. Plachetka | 7569/80252 | 6021 |

66991 7590 12/02/2010
LAW OFFICE OF MICHAEL A. SANZO, LLC
15400 CALHOUN DR.
SUITE 125
ROCKVILLE, MD 20855

| EXAMINER |
|---|
| ROBERTS, LEZAH |

| ART UNIT | PAPER NUMBER |
|---|---|
| 1612 | |

| MAIL DATE | DELIVERY MODE |
|---|---|
| 12/02/2010 | PAPER |

**Please find below and/or attached an Office communication concerning this application or proceeding.**

The time period for reply, if any, is set in the attached communication.

UNITED STATES PATENT AND TRADEMARK OFFICE

Commissioner for Patents
United States Patent and Trademark Office
P.O. Box 1450
Alexandria, VA 22313-1450
www.uspto.gov

DEC 0 2 2010

LAW OFFICE OF MICHAEL A. SANZO, LLC
15400 CALHOUN DR.
SUITE 125
ROCKVILLE MD 20855

| | |
|---|---|
| In re Application of: | : |
| John R. Plachetka | : |
| Serial No.: 10/414,493 | : PETITION DECISION |
| Filed: April 16, 2003 | : |
| Attorney Docket No.: **7569/80252** | |

This is in response to the petition under 37 CFR § 1.59(b), filed November 12, 2010, to expunge information from the above identified application. This application has not been allowed.

Petitioner requests that the documents containing information subject to a Protective Order submitted to the Patent Office on November 12, 2010, be expunged from the record. Petitioner states either: (A) that the information contains trade secret material, proprietary material and/or material that is subject to a protective order which has not been made public; or (B) that the information submitted was unintentionally submitted and the failure to obtain its return would cause irreparable harm to the party who submitted the information or to the party in interest on whose behalf the information was submitted, and the information has not otherwise been made public. The petition fee set forth in 37 CFR § 1.17(g) has been paid.

This is an examined application which is currently under non-final rejection. As such the information provided has been reviewed, in part, but proceedings in the application have not been terminated. As stated in M.P.E.P. 724, upon allowance or other action closing prosecution in an application, petition may be made for return of Proprietary information. The information cannot be expunged at this time.

The petition is **DISMISSED**. Petitioner may resubmit the petition subsequent to a Notice of Allowability or *ex parte Quayle* action being mailed in the application. No additional petition fee will be required at that time.

Should there be any questions about this decision please contact Marianne C. Seidel by letter addressed to Director, TC 1600, at the address listed above, or by telephone at 571-272-0584 or by facsimile sent to the general Office facsimile number, 571-273-8300.

Marianne C. Seidel
Quality Assurance Specialist
Technology Center 1600

UNITED STATES PATENT AND TRADEMARK OFFICE

Commissioner for Patents
United States Patent and Trademark Office
P.O. Box 1450
Alexandria, VA 22313-1450
www.uspto.gov

LAW OFFICE OF MICHAEL A. SANZO, LLC
15400 CALHOUN DR.
SUITE 125
ROCKVILLE MD 20855

11/8/10

In re Application of:
John R. Plachetka
Serial No.: 10/414,493
Filed: April 16, 2003
Attorney Docket No.: **7569/80252**

: PETITION DECISION

This is in response to the petition under 37 CFR § 1.59(b), filed October 25, 2010, to expunge information from the above identified application. This application has not been allowed.

Petitioner requests that the documents containing information subject to a Protective Order submitted to the Patent Office on October 25, 2010, be expunged from the record. Petitioner states either: (A) that the information contains trade secret material, proprietary material and/or material that is subject to a protective order which has not been made public; or (B) that the information submitted was unintentionally submitted and the failure to obtain its return would cause irreparable harm to the party who submitted the information or to the party in interest on whose behalf the information was submitted, and the information has not otherwise been made public. The petition fee set forth in 37 CFR § 1.17(g) has been paid.

This is an examined application which is currently under non-final rejection. As such the information provided has been reviewed, in part, but proceedings in the application have not been terminated. As stated in M.P.E.P. 724, upon allowance or other action closing prosecution in an application, petition may be made for return of Proprietary information. The information cannot be expunged at this time.

The petition is **DISMISSED**. Petitioner may resubmit the petition subsequent to a Notice of Allowability or *ex parte Quayle* action being mailed in the application. No additional petition fee will be required at that time.

Should there be any questions about this decision please contact Marianne C. Seidel by letter addressed to Director, TC 1600, at the address listed above, or by telephone at 571-272-0584 or by facsimile sent to the general Office facsimile number, 571-273-8300.

Marianne C. Seidel
Quality Assurance Specialist
Technology Center 1600

UNITED STATES PATENT AND TRADEMARK OFFICE

UNITED STATES DEPARTMENT OF COMMERCE
United States Patent and Trademark Office
Address: COMMISSIONER FOR PATENTS
P.O. Box 1450
Alexandria, Virginia 22313-1450
www.uspto.gov

| APPLICATION NO. | FILING DATE | FIRST NAMED INVENTOR | ATTORNEY DOCKET NO. | CONFIRMATION NO. |
|---|---|---|---|---|
| 10/414,493 | 04/16/2003 | John R. Plachetka | 7569/80252 | 6021 |

66991 7590 01/05/2011
LAW OFFICE OF MICHAEL A. SANZO, LLC
15400 CALHOUN DR.
SUITE 125
ROCKVILLE, MD 20855

| EXAMINER |
|---|
| ROBERTS, LEZAH |

| ART UNIT | PAPER NUMBER |
|---|---|
| 1612 | |

| MAIL DATE | DELIVERY MODE |
|---|---|
| 01/05/2011 | PAPER |

**Please find below and/or attached an Office communication concerning this application or proceeding.**

The time period for reply, if any, is set in the attached communication.

UNITED STATES PATENT AND TRADEMARK OFFICE

Commissioner for Patents
United States Patent and Trademark Office
P.O. Box 1450
Alexandria, VA 22313-1450
www.uspto.gov

JAN 0 5 2011

LAW OFFICE OF MICHAEL A. SANZO, LLC
15400 CALHOUN DR.
SUITE 125
ROCKVILLE MD 20855

In re Application of:
John R. Plachetka
Serial No.: 10/414,493
Filed: April 16, 2003
Attorney Docket No.: **7569/80252**

: PETITION DECISION

This is in response to the petition under 37 CFR § 1.59(b), filed December 23, 2010, to expunge information from the above identified application. This application has not been allowed.

Petitioner requests that the documents containing information subject to a Protective Order submitted to the Patent Office on December 23, 2010, be expunged from the record. Petitioner states either: (A) that the information contains trade secret material, proprietary material and/or material that is subject to a protective order which has not been made public; or (B) that the information submitted was unintentionally submitted and the failure to obtain its return would cause irreparable harm to the party who submitted the information or to the party in interest on whose behalf the information was submitted, and the information has not otherwise been made public. The petition fee set forth in 37 CFR § 1.17(g) has been paid.

This is an examined application which is currently under non-final rejection. As such the information provided has been reviewed, in part, but proceedings in the application have not been terminated. As stated in M.P.E.P. 724, upon allowance or other action closing prosecution in an application, petition may be made for return of Proprietary information. The information cannot be expunged at this time.

The petition is **DISMISSED**. Petitioner may resubmit the petition subsequent to a Notice of Allowability or *ex parte Quayle* action being mailed in the application. No additional petition fee will be required at that time.

Should there be any questions about this decision please contact Marianne C. Seidel by letter addressed to Director, TC 1600, at the address listed above, or by telephone at 571-272-0584 or by facsimile sent to the general Office facsimile number, 571-273-8300.

/MC Seidel/
Marianne C. Seidel, Quality Assurance Specialist
Technology Center 1600

UNITED STATES PATENT AND TRADEMARK OFFICE

UNITED STATES DEPARTMENT OF COMMERCE
United States Patent and Trademark Office
Address: COMMISSIONER FOR PATENTS
P.O. Box 1450
Alexandria, Virginia 22313-1450
www.uspto.gov

| APPLICATION NO. | FILING DATE | FIRST NAMED INVENTOR | ATTORNEY DOCKET NO. | CONFIRMATION NO. |
|---|---|---|---|---|
| 10/414,493 | 04/16/2003 | John R. Plachetka | 6056-00100 | 6021 |

35690 7590 07/26/2011
MEYERTONS, HOOD, KIVLIN, KOWERT & GOETZEL, P.C.
P.O. BOX 398
AUSTIN, TX 78767-0398

| EXAMINER |
|---|
| ROBERTS, LEZAH |

| ART UNIT | PAPER NUMBER |
|---|---|
| 1612 | |

| NOTIFICATION DATE | DELIVERY MODE |
|---|---|
| 07/26/2011 | ELECTRONIC |

**Please find below and/or attached an Office communication concerning this application or proceeding.**

The time period for reply, if any, is set in the attached communication.

Notice of the Office communication was sent electronically on above-indicated "Notification Date" to the following e-mail address(es):

patent_docketing@intprop.com
ptomhkkg@gmail.com

UNITED STATES PATENT AND TRADEMARK OFFICE

JUL 2 6 2011

Commissioner for Patents
United States Patent and Trademark Office
P.O. Box 1450
Alexandria, VA 22313-1450
www.uspto.gov

MEYERTONS, HOOD, KIVLIN, KOWERT & GOETZEL, P.C.
P.O. BOX 398
AUSTIN TX 78767-0398

In re Application of:
John R. Plachetka
Serial No.: 10/414,493
Filed: April 16, 2003
Attorney Docket No.: **6056-00100**

: PETITION DECISION

This is in response to the petition under 37 CFR § 1.59(b), filed July 18, 2011, to expunge information from the above identified application. This application has been allowed.

Petitioner requests that information subject to a Protective Order filed July 18, 2011 be expunged from the record because they were unintentionally submitted in the above-identified application. Petitioner states either: (A) that the information contains trade secret material, proprietary material and/or material that is subject to a protective order which has not been made public; or (B) that the information submitted was unintentionally submitted and the failure to obtain its return would cause irreparable harm to the party who submitted the information or to the party in interest on whose behalf the information was submitted, and the information has not otherwise been made public. The petition fee set forth in 37 CFR § 1.17(g) has been paid.

The reasons set forth in this petition establishes to the satisfaction of the Director that expungement of the information is appropriate. The file entry for this document has been closed and as such the document is no longer publicly available, which is the IFW equivalent to removal of a paper document from a paper file wrapper.

Therefore, petitioner's petition is GRANTED.

Should there be any questions about this decision please contact Marianne C. Seidel by letter addressed to Director, TC 1600, at the address listed above, or by telephone at 571-272-0584 or by facsimile sent to the general Office facsimile number, 571-273-8300.

/MC Seidel/
Marianne C. Seidel, Quality Assurance Specialist
Technology Center 1600

UNITED STATES PATENT AND TRADEMARK OFFICE

UNITED STATES DEPARTMENT OF COMMERCE
United States Patent and Trademark Office
Address: COMMISSIONER FOR PATENTS
P.O. Box 1450
Alexandria, Virginia 22313-1450
www.uspto.gov

| APPLICATION NO. | FILING DATE | FIRST NAMED INVENTOR | ATTORNEY DOCKET NO. | CONFIRMATION NO. |
|---|---|---|---|---|
| 10/414,493 | 04/16/2003 | John R. Plachetka | 6056-00100 | 6021 |

35690 7590 09/13/2011
MEYERTONS, HOOD, KIVLIN, KOWERT & GOETZEL, P.C.
P.O. BOX 398
AUSTIN, TX 78767-0398

| EXAMINER |
|---|
| ROBERTS, LEZAH |

| ART UNIT | PAPER NUMBER |
|---|---|
| 1612 | |

| NOTIFICATION DATE | DELIVERY MODE |
|---|---|
| 09/13/2011 | ELECTRONIC |

**Please find below and/or attached an Office communication concerning this application or proceeding.**

The time period for reply, if any, is set in the attached communication.

Notice of the Office communication was sent electronically on above-indicated "Notification Date" to the following e-mail address(es):

patent_docketing@intprop.com
ptomhkkg@gmail.com

UNITED STATES PATENT AND TRADEMARK OFFICE

SEP 1 3 2011

Commissioner for Patents
United States Patent and Trademark Office
P.O. Box 1450
Alexandria, VA 22313-1450
www.uspto.gov

MEYERTONS, HOOD, KIVLIN, KOWERT & GOETZEL, P.C.
P.O. BOX 398
AUSTIN TX 78767-0398

| | |
|---|---|
| In re Application of: | : |
| John R. Plachetka | : PETITION DECISION |
| Serial No.: 10/414,493 | : |
| Filed: April 16, 2003 | : |
| Attorney Docket No.: **6056-00100** | |

This is in response to the petition under 37 CFR § 1.59(b), filed September 2, 2011, to expunge information from the above identified application. This application has been allowed.

Petitioner requests that information subject to a Protective Order filed May 9, 2009 (it is believed applicant intended the information of May 4, 2009 be expunged as there was no May 9, 2009 document of record) ; June 12, 2009; June 16, 2009; August 21, 2009; September 2, 2009; October 16, 2009; December 4, 2009; March 4, 2010; May 11, 2010; May 19, 2010; June 25, 2010; July 2, 2010, August 3, 2010; October 25, 2010; May 19, 2010 and December 23, 2010 be expunged from the record. Petitioner states either: (A) that the information contains trade secret material, proprietary material and/or material that is subject to a protective order which has not been made public; or (B) that the information submitted was unintentionally submitted and the failure to obtain its return would cause irreparable harm to the party who submitted the information or to the party in interest on whose behalf the information was submitted, and the information has not otherwise been made public. The petition fee set forth in 37 CFR § 1.17(g) has been paid.

The reasons set forth in this petition establishes to the satisfaction of the Director that expungement of the information is appropriate. The file entry for this document has been closed and as such the document is no longer publicly available, which is the IFW equivalent to removal of a paper document from a paper file wrapper.

Therefore, petitioner's petition is GRANTED.

Should there be any questions about this decision please contact Marianne C. Seidel by letter addressed to Director, TC 1600, at the address listed above, or by telephone at 571-272-0584 or by facsimile sent to the general Office facsimile number, 571-273-8300.

/MC Seidel/
Marianne C. Seidel, Quality Assurance Specialist
Technology Center 1600

## SPE RESPONSE FOR CERTIFICATE OF CORRECTION

Paper No.: _____

DATE : 11/20/08

TO SPE OF : ART UNIT 2434

SUBJECT : Request for Certificate of Correction for Appl. No.: 10414577 Patent No.: 7313239

Please respond to this request for a certificate of correction within 7 days.

**FOR IFW FILES:**

Please review the requested changes/corrections as shown in the **COCIN** document(s) in the IFW application image. No new matter should be introduced, nor should the scope or meaning of the claims be changed.

Please complete the response (see below) and forward the completed response to scanning using document code **COCX**.

**FOR PAPER FILES:**

Please review the requested changes/corrections as shown in the attached certificate of correction. Please complete this form (see below) and forward it with the file to:

**Certificates of Correction Branch (CofC)**
**South Tower - 9A22**
**Palm Location 7580**

Valerie Jackson
**Certificates of Correction Branch**
**703-308-9390 ext.** 114

**Thank You For Your Assistance**

**The request for issuing the above-identified correction(s) is hereby:**
Note your decision on the appropriate box.

- ☐ **Approved** — **All** changes apply.
- ☐ **Approved in Part** — Specify below which changes **do not** apply.
- ☒ **Denied** — State the reasons for denial below.

**Comments:**

Requested changes are already in col.1, lines 9-30. Domestic Priority would be entered but not the incorporation by reference is not proper for front of file.

/Gilberto Barron Jr./

SPE 2432 for Kambiz Zand SPE 2434

**SPE** **Art Unit**

## SPE RESPONSE FOR CERTIFICATE OF CORRECTION

DATE : 08-09-11

TO SPE OF : ART UNIT 2163

SUBJECT : Request for Certificate of Correction for Appl. No.: 10/414591 Patent No.: 7890466

CofC mailroom date: 08-25-11

Please respond to this request for a certificate of correction within 7 days.

**FOR IFW FILES:**

Please review the requested changes/corrections as shown in the **COCIN** document(s) in the IFW application image. No new matter should be introduced, nor should the scope or meaning of the claims be changed.

Please complete the response (see below) and forward the completed response to scanning using document code **COCX**.

**FOR PAPER FILES:**

Please review the requested changes/corrections as shown in the attached certificate of correction. Please complete this form (see below) and forward it with the file to:

Certificates of Correction Branch (CofC)
Randolph Square – 9D10-A
Palm Location 7580

Note: _____

_____

Angela Green 571.272.9005

CofC Branch 703-756-1814

**Thank You For Your Assistance**

**The request for issuing the above-identified correction(s) is hereby:**

Note your decision on the appropriate box.

- ☒ **Approved** — **All** changes apply.
- ☐ **Approved in Part** — Specify below which changes **do not** apply.
- ☐ **Denied** — State the reasons for denial below.

**Comments:** All changes are to correct minor informalities and thus, all apply.

/Michael Le/

**SPE** /Don Wong/ **Art Unit** 2163

UNITED STATES PATENT AND TRADEMARK OFFICE

Commissioner for Patents
United States Patent and Trademark Office
P.O. Box 1450
Alexandria, VA 22313-1450
www.uspto.gov

**WONG, CABELLO, LUTSCH, RUTHERFORD & BRUCCULERI, L.L.P.**
**20333 SH 249 6th Floor**
**HOUSTON TX 77070**

MAILED

MAY 3 1 2011

OFFICE OF PETITIONS

| | | |
|---|---|---|
| In re Application of | : | |
| Ravi Reddy et al. | : | |
| Application No. 10/414,887 | : | DECISION ON PETITION |
| Filed: April 16, 2003 | : | TO WITHDRAW |
| Attorney Docket No. 149-0210US | : | FROM RECORD |
| | : | |

This is a decision on the Request to Withdraw as attorney or agent of record under 37 C.F.R. § 1.36(b), filed May 16, 2011.

The request is **NOT APPROVED.**

The Office will no longer accept address changes to a new practitioner or law firm filed with a Request, absent the filing of a power of attorney to the new representative. The Office will either change the correspondence address of record to the most current address information provided for the assignee of the entire interest who properly became of record under 37 CFR 3.71 or, if no assignee of the entire interest has properly been made of record under 37 CFR 3.71, the most current address information provided for the first named inventor.

Accordingly, the request to withdraw from record cannot be approved because a proper forwarding address was not provided. The request to change the correspondence address should be that of the: (1) the first named inventor; or (2) an assignee of the entire interest under 37 C.F.R 3.71. If an assignee has intervened in this application then a Statement under 37 CFR 3.73(b), or a copy of the actual assignment must be submitted with a renewed request.

All future communications from the Office will continue to be directed to the above-identified address until otherwise properly notified.

Telephone inquiries concerning this decision should be directed to the undersigned at 571-272- 4618.

/Kimberly Inabinet/

Kimberly Inabinet
Petitions Examiner
Office of Petitions

UNITED STATES PATENT AND TRADEMARK OFFICE

Commissioner for Patents
United States Patent and Trademark Office
P.O. Box 1450
Alexandria, VA 22313-1450
www.uspto.gov

**Wong, Cabello, Lutch, Rutherford & Brucculeri, LLP**
**20333 SH 249 6th Floor**
**Houston, TX 77070**

MAILED

JUN 22 2011

OFFICE OF PETITIONS

| | | |
|---|---|---|
| In re Application of | : | |
| Ravi Reddy et al. | : | |
| Application No. 10/414,887 | : | DECISION ON PETITION |
| Filed: April 16, 2003 | : | TO WITHDRAW |
| Attorney Docket No. 08-004-US (149-0210US) | : | FROM RECORD |
| | : | |

This is a decision on the renewed Request to Withdraw as attorney or agent of record under 37 C.F.R. § 1.36(b), filed June 15, 2011.

The request is **moot because a revocation of power of attorney has been filed**.

A review of the file record indicates that the power of attorney to Wong, Cabello, Lutch, Rutherford & Brucculeri, LLP, has been revoked by the assignee of the patent application on June 15, 2011. Accordingly, the request to withdraw under 37 C.F.R. § 1.36(b) is moot.

All future communications from the Office will continue to be directed to the below-listed address until otherwise notified by applicant.

Telephone inquires concerning this decision should be directed to Kimberly Inabinet at 571-272-4618.

/Kimberly Inabinet/

Kimberly Inabinet
Petitions Examiner
Office of Petitions

cc: Brake, Hughes, Bellermann, LLP
c/o CPA Global
P.O. Box 52050
Minneapolis, MN 55402

UNITED STATES PATENT AND TRADEMARK OFFICE

UNITED STATES DEPARTMENT OF COMMERCE
United States Patent and Trademark Office
Address: COMMISSIONER FOR PATENTS
P.O. Box 1450
Alexandria, Virginia 22313-1450
www.uspto.gov

| APPLICATION NUMBER | FILING OR 371(C) DATE | FIRST NAMED APPLICANT | ATTY. DOCKET NO./TITLE |
|---|---|---|---|
| 10/414,887 | 04/16/2003 | Ravi Reddy | 149-0210US |

**CONFIRMATION NO. 6354**

**POWER OF ATTORNEY NOTICE**

29855
WONG, CABELLO, LUTSCH, RUTHERFORD & BRUCCULERI, L.L.P.
20333 SH 249 6th Floor
HOUSTON, TX 77070

*OC000000048348669*

Date Mailed: 06/22/2011

## NOTICE REGARDING CHANGE OF POWER OF ATTORNEY

This is in response to the Power of Attorney filed 06/15/2011.

- The Power of Attorney to you in this application has been revoked by the assignee who has intervened as provided by 37 CFR 3.71. Future correspondence will be mailed to the new address of record(37 CFR 1.33).

/kainabinet/

Office of Data Management, Application Assistance Unit (571) 272-4000, or (571) 272-4200, or 1-888-786-0101

UNITED STATES PATENT AND TRADEMARK OFFICE

Commissioner for Patents
United States Patent and Trademark Office
P.O. Box 1450
Alexandria, VA 22313-1450
www.uspto.gov

WONG, CABELLO, LUTSCH, RUTHERFORD & BRUCCULERI,
L.L.P.
20333 SH 249 6th Floor
HOUSTON TX 77070

MAILED
MAY 24 2011
OFFICE OF PETITIONS

In re Application of :
Thomas Martin Kraus et al. :
Application No. 10/414,959 :
Filed: April 16, 2003 :
Attorney Docket No. **149-0208US** :

DECISION ON PETITION
TO WITHDRAW
FROM RECORD

This is a decision on the request to withdraw as attorney of record under 37 CFR § 1.36(b), filed May 16, 2011.

The request is **NOT APPROVED**.

The request cannot be approved because it lacks the name of the first inventor or the assignee of record that is associated with the address listed in the request. Therefore, the change of correspondence address is considered improper.

The Office will only accept correspondence address changes to the most current address information provided for the assignee of the entire interest *who properly became of record under 37 CFR 3.71,* or, if no assignee of the entire interest has properly been made of record, the most current address information provided for the first named inventor. 37 CFR 3.71(c) states:

> *An assignee becomes of record either in a national patent application or a reexamination proceeding by filing a statement in compliance with § 3.73(b) that is signed by a party who is authorized to act on behalf of the assignee.*

The assignee must establish its ownership of the patent to the satisfaction of the Director. In this regard, the statement under 37 CFR 3.73(b) must have either: (i) documentary evidence of a chain of title from the original owner to the assignee (*e.g.*, copy of an executed assignment), and a statement affirming that the documentary evidence of the chain of title from the original owner to the assignee was or concurrently is being submitted for recordation pursuant to § 3.11; or (ii) a statement specifying where documentary evidence of a chain of title from the original owner to the assignee is recorded in the assignment records of the Office (*e.g.*, reel and frame number).

All future communications from the Office will continue to be directed to the above-listed address until otherwise notified by applicant.

Telephone inquires concerning this decision should be directed to the undersigned at (571) 272-4584.

JoAnne Burke
Petitions Examiner
Office of Petitions

UNITED STATES PATENT AND TRADEMARK OFFICE

Commissioner for Patents
United States Patent and Trademark Office
P.O. Box 1450
Alexandria, VA 22313-1450
www.uspto.gov

WONG, CABELLO, LUTSCH, RUTHERFORD & BRUCCULERI,
L.L.P.
20333 SH 249 6th Floor
HOUSTON TX 77070

**MAILED**

JUN 20 2011

OFFICE OF PETITIONS

| | | |
|---|---|---|
| In re Application of | : | |
| Thomas Martin Kraus et al. | : | DECISION ON PETITION |
| Application No. 10/414,959 | : | TO WITHDRAW |
| Filed: April 16, 2003 | : | FROM RECORD |
| Attorney Docket No. **149-0208US** | : | |

This is a decision on the renewed request to withdraw as attorney of record under 37 CFR § 1.36(b), filed June 15, 2011.

The request is **NOT APPROVED** as moot.

A review of the file record indicates that the power of attorney to attorneys/agents associated with Customer Number 29855 has been revoked by the assignee of the patent application on June 15, 2011. Accordingly, the request to withdraw under 37 CFR § 1.36(b) is moot.

All future communications from the Office will continue to be directed to the below-listed address until otherwise notified by applicant.

Telephone inquires concerning this decision should be directed to the undersigned at 571-272-4584.

JoAnne Burke
Petitions Examiner
Office of Petitions

cc: BAKER & HOSTETLER LLP
WASHINGTON SQUARE, SUITE 1100
1050 CONNECTICUT AVE. N.W.
WASHINGTON DC 20036-5304

UNITED STATES PATENT AND TRADEMARK OFFICE

UNITED STATES DEPARTMENT OF COMMERCE
United States Patent and Trademark Office
Address: COMMISSIONER FOR PATENTS
P.O. Box 1450
Alexandria, Virginia 22313-1450
www.uspto.gov

| APPLICATION NUMBER | FILING OR 371(C) DATE | FIRST NAMED APPLICANT | ATTY. DOCKET NO./TITLE |
|---|---|---|---|
| 10/414,959 | 04/16/2003 | Thomas Martin Kraus | 149-0208US |

**CONFIRMATION NO. 6509**

**POA ACCEPTANCE LETTER**

93236
Brake Hughes Bellermann LLP
c/o CPA Global
P.O. Box 52050
Minneapolis, MN 55402

*OC000000048294949*

Date Mailed: 06/20/2011

## NOTICE OF ACCEPTANCE OF POWER OF ATTORNEY

This is in response to the Power of Attorney filed 06/15/2011.

The Power of Attorney in this application is accepted. Correspondence in this application will be mailed to the above address as provided by 37 CFR 1.33.

/jlburke/

Office of Data Management, Application Assistance Unit (571) 272-4000, or (571) 272-4200, or 1-888-786-0101

UNITED STATES PATENT AND TRADEMARK OFFICE

UNITED STATES DEPARTMENT OF COMMERCE
United States Patent and Trademark Office
Address: COMMISSIONER FOR PATENTS
P.O. Box 1450
Alexandria, Virginia 22313-1450
www.uspto.gov

| APPLICATION NUMBER | FILING OR 371(C) DATE | FIRST NAMED APPLICANT | ATTY. DOCKET NO./TITLE |
|---|---|---|---|
| 10/414,959 | 04/16/2003 | Thomas Martin Kraus | 149-0208US |

**CONFIRMATION NO. 6509**

**POWER OF ATTORNEY NOTICE**

29855
WONG, CABELLO, LUTSCH, RUTHERFORD & BRUCCULERI, L.L.P.
20333 SH 249 6th Floor
HOUSTON, TX 77070

*OC000000048294922*

Date Mailed: 06/20/2011

## NOTICE REGARDING CHANGE OF POWER OF ATTORNEY

This is in response to the Power of Attorney filed 06/15/2011.

- The Power of Attorney to you in this application has been revoked by the assignee who has intervened as provided by 37 CFR 3.71. Future correspondence will be mailed to the new address of record(37 CFR 1.33).

/jlburke/

Office of Data Management, Application Assistance Unit (571) 272-4000, or (571) 272-4200, or 1-888-786-0101

UNITED STATES PATENT AND TRADEMARK OFFICE

Commissioner for Patents
United States Patent and Trademark Office
P.O. Box 1450
Alexandria, VA 22313-1450
www.uspto.gov

**FINNEGAN, HENDERSON, FARABOW, GARRETT & DUNNER LLP**
**901 NEW YORK AVENUE, NW**
**WASHINGTON DC 20001-4413**

MAILED

MAR 31 2011

OFFICE OF PETITIONS

ON PETITION

In re Application of :
Federico Carniel et al :
Application No. 10/415,128 :
Filed: April 25, 2003 :
Attorney Docket No. 10880.0338 :

## REQUIREMENT FOR ADDITIONAL INFORMATION

A petition under the provisions of 37 CFR 1.378(c) to accept unintentionally delayed payment of maintenance fee in an expired patent was submitted on December 22, 2010. The declaration by Ms.Amy Adams filed currently with the instant petition has been reviewed. It is noted that at item 2 of the declaration, it is stated that, "I am informed and believe that, on or about October 29, 2008, PGT instructed Computer Packages Inc. ("CPI"), the company responsible for effecting the payment of maintenance fees for the above-mentioned patent, not to pay any future maintenance fees on the above-mentioned patent."

The Office would like to know how "PGT" and or "MOSAID" is responsible for payment of maintenance fee in the instant patent. Office records show the assignee to be **PIRELLI CAVI E SISTEMI SPA.**

A decision on this petition will be held in abeyance for a period of **TWO MONTHS** from the date of this communication to permit petitioner to clarify the above matter.

**The response should include a cover letter entitled "Response to Requirement for Additional Information."**

At the end of the two-month period specified above, a decision will be rendered on the petition under 37 CFR 1.378(c), including any supplemental information submitted in response to this Requirement for Additional Information.

Further correspondence with respect to this matter should be delivered through one of the following mediums:

By mail: Mail Stop PETITIONS
Commissioner for Patents
Post Office Box 1450
Alexandria, VA 22313-1450

By hand: Customer Service Window
Mail Stop Petitions
Randolph Building
401 Dulany Street
Alexandria, VA 22314

By fax: (571) 273-8300
ATTN: Office of Petitions

By internet: EFS-Web
www.uspto.gov/ebc/efs_help.html
(for help using EFS-Web call the
Patent Electronic Business Center
at (866) 217-9197)

Any questions concerning this matter may be directed to the undersigned at (571) 272-3208.

/KOC/
Karen Creasy
Petitions Examiner
Office of Petitions

UNITED STATES PATENT AND TRADEMARK OFFICE

Commissioner for Patents
United States Patent and Trademark Office
P.O. Box 1450
Alexandria, VA 22313-1450
www.uspto.gov

MAILED
JUN 14 2011
OFFICE OF PETITIONS

**FINNEGAN, HENDERSON, FARABOW, GARRETT & DUNNERLLP**
**901 NEW YORK AVENUE, NW**
**WASHINGTON DC 20001-4413**

| | | |
|---|---|---|
| In re Patent No. 7,006,744 | : | |
| Issue Date: February 28, 2006 | : | |
| Application No. 10/415,128 | : | ON PETITION |
| Filed: April 25, 2003 | : | |
| Attorney Docket No. 10880.0338 | : | |

This is a decision on the petition under 37 CFR 1.378(c), filed December 22, 2010 and supplemented on May 24, 2011, to accept the delayed payment of a maintenance fee for the above-identified patent.

The petition is **DISMISSED**.

If reconsideration of this decision is desired, a petition for reconsideration under 37 CFR 1.378(e) must be filed within TWO (2) MONTHS from the mail date of this decision. No extension of this two-month time limit can be granted under 37 CFR 1.136(a) or (b). This is **not** a final agency action within the meaning of 5 U.S.C. § 704.

Any petition for reconsideration of this decision must be accompanied by the petition fee of $400 as set forth in 37 CFR 1.17(f). The petition for reconsideration must include the lacking item(s) noted below, since, after a decision on the petition for reconsideration, no further reconsideration or review of the matter will be undertaken by the Director.

A petition to accept the unintentionally delayed payment of a maintenance fee under 35 U.S.C. 41(c) and 37 CFR 1.378(c) must be accompanied by: (1) a statement that the delay was unintentional; (2) payment of the appropriate maintenance fee, unless previously submitted; (3) payment of the surcharge set forth in 37 CFR 1.20(i)(2). This petition lacks item (1) above.

The instant patent exipired at midnight on February 26, 2010. The declaration by Ms. Amy Adams states that the execution of the assignment of the instant patent to MOSAID was not complete until December 13, 2010. Accordingly, it is unclear whether the person that signed the unintentional delay statement in the petition filed December 22, 2010 and supplemented on May 24, 2011was even authorized to do so.

Further correspondence with respect to this matter should be delivered through one of the following mediums:

By mail: Mail Stop PETITIONS
Commissioner for Patents
Post Office Box 1450
Alexandria, VA 22313-1450

By hand: Customer Service Window
Mail Stop Petitions
Randolph Building
401 Dulany Street
Alexandria, VA 22314

By fax: (571) 273-8300
ATTN: Office of Petitions

By internet: EFS-Web
www.uspto.gov/ebc/efs_help.html
(for help using EFS-Web call the
Patent Electronic Business Center
at (866) 217-9197)

Any questions concerning this matter may be directed to the undersigned at (571) 272-3208.

/KOC/
Karen Creasy
Petitions Examiner
Office of Petitions

UNITED STATES PATENT AND TRADEMARK OFFICE

Commissioner for Patents
United States Patent and Trademark Office
P.O. Box 1450
Alexandria, VA 22313-1450
www.uspto.go

**FINNEGAN, HENDERSON, FARABOW,**
**GARRETT & DUNNER LLP**
**901 NEW YORK AVENUE, NW**
**WASHINGTON DC 20001-4413**

MAILED

SEP 07 2011

OFFICE OF PETITIONS

| | | |
|---|---|---|
| In re Patent No. 7,006,744 | : | |
| Issue Date: February 28, 2006 | : | |
| Application No. 10/415,128 | : | ON PETITION |
| Filed: April 25, 2003 | : | |
| Attorney Docket No. 10880.0338 | : | |

This is a decision on the petition, filed August 15, 2011, under 37 CFR 1.378(e) requesting reconsideration of a prior decision which refused to accept under 37 CFR 1.378(c) the delayed payment of a maintenance fee for the above-identified patent.

The request to accept the delayed payment of the maintenance fee is **GRANTED**.

Accordingly, the maintenance fee in this case is hereby accepted and the above-identified patent is hereby reinstated as of the mail date of this decision.

Telephone inquiries concerning this decision should be directed to the undersigned at (571) 272-3208.

/KOC/
Karen Creasy
Petitions Examiner
Office of Petitions

UNITED STATES PATENT AND TRADEMARK OFFICE

Commissioner for Patents
United States Patent and Trademark Office
P.O. Box 1450
Alexandria, VA 22313-1450
www.uspto.gov

FINNEGAN, HENDERSON, FARABOW,
GARRETT & DUNNER, LLP
901 NEW YORK AVENUE, NW
WASHINGTON, DC 20001-4413

**MAILED**

SEP 07 2010

**OFFICE OF PETITIONS**

| | | |
|---|---|---|
| In re Application of | : | |
| Nathalie Collin, et al. | : | |
| Application No. 10/415,138 | : | DECISION GRANTING PETITION |
| Filed: July 9, 2003 | : | UNDER 37 CFR 1.313(c)(2) |
| Attorney Docket No. 05725.1191 | : | |

This is a decision on the petition under 37 CFR 1.313(c)(2), filed September 3, 2010, to withdraw the above-identified application from issue after payment of the issue fee.

The petition is **GRANTED**.

The above-identified application is withdrawn from issue for consideration of a submission under 37 CFR 1.114 (request for continued examination). *See* 37 CFR 1.313(c)(2).

***Petitioner is advised that the issue fee paid on August 11, 2010 cannot be refunded. If, however, this application is again allowed, petitioner may request that it be applied towards the issue fee required by the new Notice of Allowance.***[1]

Telephone inquiries regarding this decision should be directed to undersigned at (571) 272-1642. All other inquiries regarding the examination or status of this application this application should be directed to the Technology Center.

This application is being referred to Technology Center AU 1619 for processing of the request for continued examination under 37 CFR 1.114 and for consideration of the concurrently filed information disclosure statement.

/AMW/
April M. Wise
Petitions Examiner
Office of Petitions

---

[1] *The request to apply the issue fee to the new Notice may be satisfied by completing and returning the new Part B – Fee(s) Transmittal Form (along with any balance due at the time of submission). Petitioner is advised that the Issue Fee Transmittal Form must be completed and timely submitted to avoid abandonment of the application.*

UNITED STATES PATENT AND TRADEMARK OFFICE

6-2-2011

Commissioner for Patents
United States Patent and Trademark Office
P.O. Box 1450
Alexandria, VA 22313-1450
www.uspto.gov

Patent No. : 7,939,087 B2
Ser. No. : 10/415,182
Inventor(s) : Telford, et. al.
Issued : May 10, 2011

Re: Request for Certificate of Correction

Consideration has been given your request for the issuance of a certificate of correction for the above-identified patent under the provisions of Rule(s) 1.322 or 1.323.

In view of the foregoing, your request is hereby denied.

A request to correct the Assignee under 37 CFR 3.81(b) should include:

A. **the processing fee set forth in 37 CFR 1.17(ih) (currently $130);**
B. a statement that the failure to include the correct assignee name on the PTOL-85B was inadvertent; and
C. a copy of the Notice of Recordation of Assignment Document, reflecting the reel and frame number where the assignment(s) is recorded and/or reflecting proof of *the date* the assignment was submitted for recordation.

*In the Request*, Applicant(s) may request that the file be forwarded to Certificates of Correction Branch, for issuance of a Certificate of Correction, if the Request is granted.

Any request under 37 CFR 3.81(b) should be directed to the following address or facsimile number:

By mail: Mail Stop PETITIONS
Commissioner for Patents
Post Office Box 1450
Alexandria, VA 22313-1450

By hand: Customer Service Window
Mail Stop Petitions
Randolph Building
401 Dulany Street
Alexandria, VA 22314

By fax: (703) 872-9306
ATTN: Office of Petitions

If a fee (currently $100) was previously submitted for consideration of a Request for Certificate of Correction, under CFR 1.323, to correct assignment data, , no additional fee is required.

**Eva James**
For Mary Diggs
Decisions & Certificates
of Correction Branch
(703) 756-1583 or 1580

Banner & Witcoff, LTD
1100 13th Street, NW
Suite 1200
Washington, DC 20005-4051

ej

UNITED STATES PATENT AND TRADEMARK OFFICE

Commissioner for Patents
United States Patent and Trademark Office
P.O. Box 1450
Alexandria, VA 22313-1450
www.uspto.gov

BANNER & WITCOFF, LTD.
1100 13th STREET, N.W.
SUITE 1200
WASHINGTON DC 20005-4051

MAILED
AUG 30 2011
OFFICE OF PETITIONS

| | | |
|---|---|---|
| In re Patent No. 7,939,087 | : | |
| Issue Date: May 10, 2011 | : | |
| Application No. 10/415,182 | : | DECISION ON PETITION |
| Filed: October 14, 2003 | : | |
| Attorney Docket No. 02441.00040 | : | |

This is a decision on the Request To Correct Assignee Under 37 C.F.R. §3.81(b), filed July 15, 2011, which is being treated as a Petition Under 37 CFR §3.81(b), to accept the omission of the second assignee's name. A completed Certificate of Correction Form was previously submitted.

The petition under 37 CFR §3.81(b) is **GRANTED**.

Petitioner urges that the present petition was submitted to accept the omission of the second assignee's name on the previously submitted PTOL 85B and such error was inadvertent. Accordingly, petitioner requests that a Certificate of Correction (PTO/SB/44) be issued to add the omitted second assignee's name to the Title Page of the Letters Patent.

37 CFR 3.81(b), effective June 25, 2004, reads:

> *After payment of the issue fee:* Any request for issuance of an application in the name of the assignee submitted after the date of payment of the issue fee, and any request for a patent to be corrected to state the name of the assignee, must state that the assignment was submitted for recordation as set forth in §3.11 before issuance of the patent, and must include a request for a certificate of correction under §1.323 of this chapter (accompanied by the fee set forth in §1.20(a) and the processing fee set forth in §1.17(i) of this chapter.

The requisite $100.00 fee (Fee Code 1811), as set forth under 37 CFR 1.20(a), and the requisite $130.00 processing fee (Fee Code 1464), as set forth under 37 CFR 1.17(i), have been submitted. Further, Office assignment records are consistent with the requested correction. Accordingly, since the Petition complies with the provisions of 37 CFR §3.81(b), it is appropriate for the Office to issue a Certificate of Correction in accordance with the content of the Form previously submitted.

Inquiries related this communication should be directed to the undersigned at (571)272-3213.

Any questions concerning the issuance of a Certificate of Correction should be directed to the Certificates of Correction Branch at (703)756-1814.

This matter is being referred to the Certificates of Correction Branch for processing of a Certificate of Correction in U.S. Patent No. 7,939,087.

Cheryl Gibson Baylor

Cheryl Gibson-Baylor
Petitions Examiner
Office of Petitions

UNITED STATES PATENT AND TRADEMARK OFFICE

Commissioner for Patents
United States Patent and Trademark Office
P.O. Box 1450
Alexandria, VA 22313-1450
www.uspto.gov

DUANE MORRIS LLP - DC
505 9th Street
Suite 1000
WASHINGTON DC 20004-2166

**MAILED**

JAN 14 2011

**OFFICE OF PETITIONS**

In re Patent No. 7,229,689 :
Issue Date: June 12, 2007 :
Application No. 10/415,520 : DECISION ON PETITION
Filed: July 18, 2003
Attorney Docket No. WIL01 001

This is a decision on the Request To Correct Assignee Under 37 CFR 3.81(b), filed January 20, 2010, which is being treated as a Petition Under 37 CFR §3.81(b), to identify the correct assignee's name. A completed Certificate of Correction Form (PTO/SB/44) was previously submitted.

The petition under 37 CFR §3.81(b) is **GRANTED**.

Petitioner requests that the present Petition was submitted to correct the assignee's name on the previously submitted PTOL 85B and such error was inadvertent. Accordingly, petitioner requests, in effect, that the Title Page of the above-identified patent be corrected, via issuance of Certificate of Correction, to correct the assignee's name identified thereon from:

"SSL International, Cambridge (GB)"

to:

--Medlock Medical Limited, Oldham, United Kingdom--

37 CFR 3.81(b), effective June 25, 2004, reads:

> *After payment of the issue fee:* Any request for issuance of an application in the name of the assignee submitted after the date of payment of the issue fee, and any request for a patent to be corrected to state the name of the assignee, must state that the assignment was submitted for recordation as set forth in § 3.11 before issuance of the patent, and must include a request for a certificate of correction under § 1.323 of this chapter (accompanied by the fee set forth in § 1.20(a) and the processing fee set forth in § 1.17(i) of this chapter.

The requisite $100.00 fee (Fee Code 1811), as set forth under 37 CFR 1.20(a), and the requisite $130.00 processing fee (Fee Code 1464), as set forth under 37 CFR 1.17(i), have been submitted. Further, Office assignment records are consistent with the requested correction. Accordingly, since the Petition complies with the provisions of 37 CFR 3.81(b), it is appropriate for the Office to issue a Certificate of Correction in accordance with the content of the Form PTO/SB/44 previously submitted.

Receipt is acknowledged of the Change Of Correspondence Address filed with the petition has been accepted.

Inquiries related this communication should be directed to the undersigned at (571)272-3213.

Any questions concerning the issuance of a Certificate of Correction should be directed to the Certificates of Correction Branch at (571) 272-4200.

This matter is being referred to the Certificates of Correction Branch for processing of a Certificate of Correction in U.S. Patent No. 7,229,689.

Cheryl Gibson-Baylor

Cheryl Gibson-Baylor
Petitions Examiner
Office of Petitions

UNITED STATES PATENT AND TRADEMARK OFFICE

Commissioner for Patents
United States Patent and Trademark Office
P.O. Box 1450
Alexandria, VA 22313-1450
www.uspto.gov

Leason Ellis LLP
81 Main Street
Suite 503
White Plains NY 10601

MAILED
JUL 28 2011
OFFICE OF PETITIONS

In re Application of
Lavallee
Application No. 10/415,962
Filed: October 22, 2003
Atty. Dkt. No. 0353/0038-US0

DECISION ON PETITION

This decision is in response to the petition under 37 CFR 1.47(b) filed February 7, 2011. This matter is properly treated under 37 CFR 1.183 to waive the requirements of 37 CFR 1.131.

The petition under 37 CFR 1.183 is hereby **DISMISSED WITHOUT PREJUDICE**.

Any request for reconsideration of this decision must be submitted within **TWO (2) MONTHS** from mail date of this decision. Extensions of time under 37 CFR 1.136(a) are permitted. The reconsideration request should include a cover letter entitled "Renewed Petition under 37 CFR 1.183." This is not a final agency decision.

Petitioner herein has submitted a petition fee of $200.00. The required petition fee is $400.00. See, 37 CFR 1.17(f). The petition does not appear to authorize the charging of any deficit fee to an authorized deposit account. As the petition fee is a prerequisite prior to treatment on the merits of any petition submitted pursuant to 37 CFR 1.183, the instant petition is subject to dismissal without prejudice.

Any request for reconsideration must be accompanied by the required petition fee.

Further correspondence with respect to this matter should be addressed as follows:

By Mail:
Mail Stop PETITION
Commissioner for Patents
P. O. Box 1450
Alexandria, VA 22313-1450

By hand:
U. S. Patent and Trademark Office
Customer Service Window, Mail Stop Petitions
Randolph Building
401 Dulany Street
Alexandria, VA 22314

The centralized facsimile number is **(571) 273-8300.**

This application is being returned to Group Art Unit 3775 for further processing.

Telephone inquiries concerning this decision should be directed to the undersigned at (571) 272-3205.

*/ALESIA M. BROWN/*

Alesia M. Brown
Attorney Advisor
Office of Petitions

UNITED STATES PATENT AND TRADEMARK OFFICE

Commissioner for Patents
United States Patent and Trademark Office
P.O. Box 1450
Alexandria, VA 22313-1450
www.uspto.gov

PANITCH SCHWARZE BELISARIO & NADEL LLP
ONE COMMERCE SQUARE
2005 MARKET STREET, SUITE 2200
PHILADELPHIA PA 19103

**MAILED**

OCT 12 2011

**OFFICE OF PETITIONS**

In re Application of :
Lavallee :
Application No. 10/415,962 : ON PETITION
Filed: October 22, 2003 :
Attorney Docket No. 688282-10US :

This is a decision, filed September 30, 2011, under 37 CFR 1.183 to waive the requirements of 37 CFR 1.131 to the extent that it requires that all of the named inventors execute the declaration under 37 CFR 1.131.

The petition is DISMISSED.

Petitioners assert that, while the named inventor contributed to the conception of the claimed invention which is under rejection, said inventor is not available to execute the attached declaration under 37 CFR 1.131 in support of establishing conception of the claimed October 23, 2000.

With respect to who may make affidavit or declaration under 37 CFR 1.131, MPEP 715.04 states:

> (A) All the inventors of the subject matter claimed.
> (B) An affidavit or declaration by less than all named inventors of an application is accepted where it is shown that less than all named inventors of an application invented the subject matter of the claim or claims under rejection. For example, one of two joint inventors is accepted where it is shown that one of the joint inventors is the sole inventor of the claim or claims under rejection.
> (C) If a petition under 37 CFR 1.47 was granted or the application was accepted under 37 CFR 1.42 or 1.43, the affidavit or declaration may be signed by the 37 CFR 1.47 applicant or the legal representative, where appropriate.
> (D) The assignee or other party in interest when it is not possible to produce the affidavit or declaration of the inventor. Ex parte Foster, 1903 C.D. 213, 105 O.G. 261 (Comm'r Pat. 1903).

Thus, the assignee herein may make the necessary oath or declaration under 37 CFR 1.131. The assignee is presumably available to sign the affidavit or declaration under 37 CFR 1.131. Accordingly, no extraordinary circumstance having been presented, the petition under 37 CFR 1.183 to waive the requirements of 37 CFR 1.131 is hereby DISMISSED.

It is noted that to date, applicants have not submitted an affidavit or declaration under 37 CFR 1.131 executed by either the inventor or the assignee.

Accordingly, petitioners herein are given TWO MONTHS from the mail date indicated above to submit a properly executed oath or declaration under 37 CFR 1.131. Such affidavit or declaration, signed by either

the inventor or the authorized representative of the assignee, should be directed to the examiner of record and need not be by way of renewed petition.

This application is being directed to GAU 3775 for further processing.

Inquiries regarding this communication may be directed to the undersigned at (571) 272-3205. All other inquiries must be directed to the Technology Center.

*/ALESIA M. BROWN/*

Alesia M. Brown
Attorney Advisor
Office of Petitions

UNITED STATES PATENT AND TRADEMARK OFFICE

Commissioner for Patents
United States Patent and Trademark Office
P.O. Box 1450
Alexandria, VA 22313-1450
www.uspto.gov

PANITCH SCHWARZE BELISARIO & NADEL LLP
ONE COMMERCE SQUARE
2005 MARKET STREET, SUITE 2200
PHILADELPHIA PA 19103

MAILED
JAN 31 2012
OFFICE OF PETITIONS

In re Application of :
Lavallee :
Application No. 10/415,962 :
Filed: October 22, 2003 :
Attorney Docket No. 688282-10US :

ON PETITION

This is a decision on the renewed petition filed December 7, 2011 under 37 CFR 1.183 to waive the requirements of 37 CFR 1.131 to the extent that it requires that all of the named inventors execute the declaration under 37 CFR 1.131.

The petition is granted to the extent infra.

Petitioners assert that, while the named inventor contributed to the conception of the claimed invention, said inventor is not available to execute the attached declaration under 37 CFR 1.131 in support of establishing invention of the subject matter of the claims in the above-identified application prior to the effective date of the reference or activity of U.S. Patent No. 6,711,432

As noted in MPEP 715.04, an adequate showing may lead to acceptance of a declaration under 37 CFR 1.131 executed by less than all the named inventors of the claimed subject matter in question.[1] Under the facts presented, it is agreed that justice requires waiver of the rules to the extent that they require each inventor to make declaration. However, the favorable decision herein does not relieve applicants from their burden to establish that the invention was completed before the date of the reference and that the claimed invention was the product of the joint inventors. See, In re Carlson, 79 F.2d. 900, 27 USPQ 400 (CCPA 1935).

This application is being referred to the Office of Data Management for further processing.

Inquiries regarding this communication may be directed to the undersigned at (571) 272-3205.

*/ALESIA M. BROWN/*

Alesia M. Brown
Attorney Advisor
Office of Petitions

[1] If a petition under 37 CFR 1.47 was granted or the application was accepted under 37 CFR 1.42 or 1.43, the affidavit or declaration may be signed by the 37 CFR 1.47 applicant or the legal representative, where appropriate. See, MPEP 715.04(C).

## SPE RESPONSE FOR CERTIFICATE OF CORRECTION

Paper No.: _____

DATE : August 2, 2011

TO SPE OF : ART UNIT 1623 SPE Shaojia Jiang

SUBJECT : Request for Certificate of Correction for Appl. No.: 10/416,347 Patent No.: 7,576,070 B2

Please respond to this request for a certificate of correction within 7 days.

**FOR IFW FILES:**

Please review the requested changes/corrections as shown in the **COCIN** document(s) in the IFW application image. No new matter should be introduced, nor should the scope or meaning of the claims be changed.

Please complete the response (see below) and forward the completed response to scanning using document code **COCX**.

**FOR PAPER FILES:**

Please review the requested changes/corrections as shown in the attached certificate of correction. Please complete this form (see below) and forward it with the file to:

**Certificates of Correction Branch (CofC)**
**Randolph Square Building**
**2800 South Randolph Street**
**Arlington, VA 22206**

**Should Items (22), (86) and (87) be deleted as requested by applicant? Also the applicant is requesting the insertion of Item (60) Related U.S. Application Data.**

**See COCIN dated 7-28-2011**

***Antonio Johnson***

**Certificates of Correction Branch**

**(571)272-0483 Fax – (571)270-9846**

**Thank You For Your Assistance**

**The request for issuing the above-identified correction(s) is hereby:**
Note your decision on the appropriate box.

- ☐ **Approved** — **All** changes apply.
- ☐ **Approved in Part** — Specify below which changes **do not** apply.
- XXXX **Denied** — State the reasons for denial below.

**Comments:** This application (10/416,347) was properly processed as a 371 rather than a bypass. Correcting it as a Continuation of application PCT/EP01/13508, filed Nov. 21, 2001 would change the priority of the case and the change is not aligned with the Oath Hence approval is denied.

**SPE** /S.A.Jiang/ **Art Unit** 1623

**UNITED STATES PATENT AND TRADEMARK OFFICE**
COMMISSIONER OF PATENTS AND TRADEMARKS
P.O. Box 1450
Alexandria, VA 22313-1450

November 7, 2011

Patent No.: 7,576,070 B2
Applicant : Markwart Kunz, et al.
Issued : August 18, 2009
For : **METHOD FOR PRODUCING PECTIN HYDROLYSIS PRODUCTS**
Docket No. : **G5005.0016**

Re: Request for Certificate of Correction

Consideration has been given your request for the issuance of a certificate of correction for the above-identified patent under the provisions of Rule 1.323.

Respecting the alleged error to remove sections (22), (86) and (87) from title page of patent. This application (10/416,347) was properly processed as a 371 rather than a bypass. Correcting it as a Continuation of application PCT/EP01/13508, filed Nov. 21, 2001 would change the priority of the ase and the change is not aligned with the Oath. The change to the title page removing sections (22), (86) and (87) is disapproved.

In view of the foregoing, you request is hereby denied.

Further correspondence concerning this matter should be filed and directed to Decisions and Certificates of Correction Branch.

Antonio Johnson
(571)272-0483
For Mary F. Diggs, Supervisor
Decisions & Certificates of Correction Branch
(703) 756-1580

DICKSTEIN SHAPIRO LLP
1633 Broadway
NEW YORK NY 10019

AJ/cbn

## SPE RESPONSE FOR CERTIFICATE OF CORRECTION

Paper No.: _____

DATE : August 2, 2011

TO SPE OF : ART UNIT 1623 SPE Shaojia Jiang

SUBJECT : Request for Certificate of Correction for Appl. No.: 10/416,347 Patent No.: 7,576,070 B2

Please respond to this request for a certificate of correction within 7 days.

**FOR IFW FILES:**

Please review the requested changes/corrections as shown in the **COCIN** document(s) in the IFW application image. No new matter should be introduced, nor should the scope or meaning of the claims be changed.

Please complete the response (see below) and forward the completed response to scanning using document code **COCX**.

**FOR PAPER FILES:**

Please review the requested changes/corrections as shown in the attached certificate of correction. Please complete this form (see below) and forward it with the file to:

**Certificates of Correction Branch (CofC)**
**Randolph Square Building**
**2800 South Randolph Street**
**Arlington, VA 22206**

**Should items (22), (86) and (87) be deleted as requested by applicant? Also the applicant is requesting the insertion of item (60) Related U.S. Application Data.**

**See COCIN dated 7-28-2011**

***Antonio Johnson***

**Certificates of Correction Branch**

**(571)272-0483 Fax – (571)270-9846**

**Thank You For Your Assistance**

**The request for issuing the above-identified correction(s) is hereby:**
Note your decision on the appropriate box.

- ☐ **Approved** — **All** changes apply.
- ☐ **Approved in Part** — Specify below which changes **do not** apply.
- XXX☒ **Denied** — State the reasons for denial below.

**Comments:** This application (10/416,347) was properly processed as a 371 rather than a bypass. Correcting it as a Continuation of application PCT/EP01/13508, filed Nov. 21, 2001 would change the priority of the case and the change is not aligned with the Oath Hence approval is denied.

**SPE** /S.A.Jiang/ **Art Unit** 1623

## SPE RESPONSE FOR CERTIFICATE OF CORRECTION

Paper No.: _____

DATE : August 2, 2011

TO SPE OF : ART UNIT 1623 SPE Shaojia Jiang

SUBJECT : Request for Certificate of Correction for Appl. No.: 10/416,347 Patent No.: 7,576,070 B2

Please respond to this request for a certificate of correction within 7 days.

**FOR IFW FILES:**

Please review the requested changes/corrections as shown in the **COCIN** document(s) in the IFW application image. No new matter should be introduced, nor should the scope or meaning of the claims be changed.

Please complete the response (see below) and forward the completed response to scanning using document code **COCX**.

**FOR PAPER FILES:**

Please review the requested changes/corrections as shown in the attached certificate of correction. Please complete this form (see below) and forward it with the file to:

**Certificates of Correction Branch (CofC)**
**Randolph Square Building**
**2800 South Randolph Street**
**Arlington, VA 22206**

**Should Items (22), (86) and (87) be deleted as requested by applicant? Also the applicant is requesting the insertion of Item (60) Related U.S. Application Data.**

**See COCIN dated 7-28-2011**

***Antonio Johnson***

**Certificates of Correction Branch**

**(571)272-0483 Fax – (571)270-9846**

**Thank You For Your Assistance**

**The request for issuing the above-identified correction(s) is hereby:**
Note your decision on the appropriate box.

- ☐ **Approved** — **All** changes apply.
- ☐ **Approved in Part** — Specify below which changes **do not** apply.
- XXX☒ **Denied** — State the reasons for denial below.

**Comments:** This application (10/416,347) was properly processed as a 371 rather than a bypass. Correcting it as a Continuation of application PCT/EP01/13508, filed Nov. 21, 2001 would change the priority of the case and the change is not aligned with the Oath Hence approval is denied.

**SPE** /S.A.Jiang/ **Art Unit** 1623

UNITED STATES PATENT AND TRADEMARK OFFICE

Commissioner for Patents
United States Patent and Trademark Office
P.O. Box 1450

MAILED
NOV 29 2011
OFFICE OF PETITIONS

**DOBE LAW GROUP, LLC**
**7207 HANOVER PARKWAY**
**SUITE C/D**
**GREENBELT MD 20770**

| | | |
|---|---|---|
| In re Application of | : | |
| Rolf BERGE et al. | : | ON PETITION |
| Application No. 10/416,378 | : | |
| Filed: September 2, 2003 | : | |
| Atty. Docket No.: 966917.00021 | | |

This is a decision on the petition under 37 CFR 1.137(b), filed November 4, 2011, to revive the above-identified application.

The petition is **GRANTED**.

The application became abandoned for failure to reply in a timely manner to the Notice of Allowance and Fee(s) Due mailed February 9, 2011 (Notice), which set a statutory period for reply of three (3) months. The application became abandoned May 10, 2011. A Notice of Abandonment was mailed May 25, 2011.

The petition satisfies the conditions for revival pursuant to 37 CFR 1.137(b) by including (1) a reply in the form of payment of the issue and publication fees in accordance with the Notice mailed February 9, 2011, (2) a petition fee of $ 930, and (3) a statement of unintentional delay. The reply is accepted as having been unintentionally delayed.

37 CFR 1.137(b)(3) requires a statement that the entire delay in filing the required reply from the due date for the reply until the filing of a grantable petition pursuant to 37 CFR 1.137(b) was unintentional. If the statement contained in the instant petition varies from the language required by 37 CFR 1.137(b)(3), the statement contained in the instant petition is being construed as the statement required by 37 CFR 1.137(b)(3) and petitioner must notify the Office if this is **not** a correct interpretation of the statement contained in the instant petition.

There is no indication that the person signing the instant petition was ever given a power of attorney or authorization of agent to prosecute the above-identified application. If the person signing the instant petition desires to receive future correspondence regarding this application, the appropriate power of attorney or authorization of agent must be submitted. While a courtesy copy of this decision is being mailed to the person signing

the instant petition, all future correspondence will be directed to the address currently of record until such time as appropriate instructions are received to the contrary.

Telephone inquiries relating to this decision should be directed to Robert DeWitty, Petitions Attorney, Office of Petitions (571-272-8427).

The application will be referred to Office of Data Management for further processing.

Robert DeWitty
Petitions Attorney
Office of Petitions

cc: J. Mitchell Jones
Casimir Jones, S.C.
2275 Deming Way, Suite 310
Middleton, WI 53562

UNITED STATES PATENT AND TRADEMARK OFFICE

Commissioner for Patents
United States Patent and Trademark Office
P.O. Box 1450
Alexandria, VA 22313-1450
www.uspto.gov

MAILED
AUG 02 2010
OFFICE OF PETITIONS

COOPER & DUNHAM, LLP
30 Rockefeller Plaza
20th Floor
NEW YORK NY 10112

In re Application of :
Morell, et al. :
Application No. 10/416,439 : ON APPLICATION FOR
Filed: December 5, 2003 : PATENT TERM ADJUSTMENT
Atty Docket No. A20-048 :

This is in response to the PETITION TO CORRECT PATENT TERM ADJUSTMENT (PTA) INDICATED IN NOTICE OF ALLOWANCE filed March 26, 2010, which is properly treated under 37 CFR 1.705(b).. Applicants submit that the correct patent term adjustment to be indicated on the patent is one thousand, three hundred and twenty-two (1,322) days, seventeen (17) days as calculated by the Office as of the mailing of the initial determination of patent term adjustment. Applicants request this correction, in part, on the basis that the Office will take in excess of three years to issue this patent.

As the instant application for patent term adjustment requests reconsideration of the patent term adjustment as it relates to the Office's failure to issue the patent within 3 years of the filing date, the application for patent term adjustment under 37 CFR 1.705(b) is **DISMISSED as PREMATURE**.

Knowledge of the actual date the patent issues is required to calculate the amount, if any, of additional patent term patentee is entitled to for Office failure to issue the patent within 3 years. See § 1.702(b). (This is true even where a request for continued examination (RCE) was filed). The computer will not undertake the § 1.702(b) calculation until the actual date of issuance of the patent has been determined. Likewise, the computer will not calculate any further Office delay under § 1.702(a)(4) or applicant delay under § 1.704(c)(10) until the actual date of issuance of the patent has been determined. As such, the Office can not make a determination on the correctness of the patent term adjustment until the patent has issued.

Requesting reconsideration of the patent term adjustment to be indicated on the patent under 37 CFR 1.705(b) based on the initial determination of patent term adjustment and a projected issuance date of the patent (or even the filing date of the request for continued examination) is premature. Accordingly, it is appropriate to dismiss as premature such a request.

Rather than file an application for patent term adjustment under 37 CFR 1.705(b) contesting the 37 CFR 1.702(b) calculation at the time of the mailing of the notice of allowance, applicant is advised that they may wait until the time of the issuance of the patent and file a request for reconsideration of the patent term adjustment pursuant to 37 CFR 1.705(d). As the USPTO does not calculate the amount of time earned pursuant to 37 CFR 1.702(b) until the time of the issuance of the patent, the Office will consider any request for reconsideration of the patent term adjustment due to an error in the calculation of 37 CFR 1.702(b) to be timely if the request for reconsideration is filed within two months of the issuance of the patent. However, as to all other bases for contesting the initial determination of patent term adjustment received with the notice of allowance, applicant must timely file an application for patent term adjustment prior to the payment of the issue fee[1].

To the extent that applicants otherwise requests reconsideration of the patent term adjustment at the time of the mailing of the notice of allowance, the application for patent term adjustment is **DISMISSED**.

On August 10, 2005 (14 months and 186 days after the filing of this application), the Office mailed a non-final Office action. On November 2, 2005, the Office mailed a communication withdrawing the non-final Office action mailed August 10, 2005. On December 8, 2005 (14 months and 306 days after the filing of

---

[1] For example, if applicant disputes both the calculation of patent term adjustment under 37 CFR 1.702(a)(1) for Office failure to mail a first Office action or notice of allowance not later than fourteen months after the date on which the application was filed and under 37 CFR 1.702(b) for Office failure to issue a patent within three years of the actual filing date of the application, then applicant must still timely file an application for patent term adjustment prior to the payment of the issue fee to contest the calculation of Office delay in issuing a first Office action or notice of allowance. See 37 CFR 1.705(b) and 35 U.S.C. 154(b)(3)(B). A dispute as to the calculation of the §1.702(a)(1) period raised on request for reconsideration of patent term adjustment under 37 CFR 1.705(d) will be dismissed as untimely filed.

this application), a restriction requirement was mailed. Applicants argue that the examination delay pursuant to 37 C.F.R. § 1.702(a)(1) should be 306 days, not 186 days.

Applicants' arguments are not persuasive. Pursuant to 37 C.F.R. § 1.702(a),

> Subject to the provisions of 35 U.S.C. 154(b) and this subpart, the term of an original patent shall be adjusted if the issuance of the patent was delayed due to the failure of the Office to:
> (1) Mail at least one of a notification under 35 U.S.C. 132 or a notice of allowance under 35 U.S.C. 151 not later than fourteen months after the date on which the application was filed under 35 U.S.C. 111(a) or fulfilled the requirements of 35 U.S.C. 371 in an international application;

On August 10, 2005, the Office mailed a first notification under 35 U.S.C. 132. This was fourteen months and 186 days after the filing of the application. Accordingly, a period of adjustment of 186 days was entered for Office delay pursuant to 37 CFR 1.702(a)(1). A review of the record confirms that this was the proper period of adjustment for Office delay.

The subsequent mailing of a communication by the examiner altering the previous action does not negate the fact that the Office took action in this application within the meaning of § 1.702(a)(1) on August 10, 2005. The examiner does not have the authority to vacate, rescind, or withdraw an Office action. Unless vacated by the Technology Center Director, for purposes of calculating patent term adjustment, the action originally mailed by the examiner on August 10, 2005 will be used to calculate the amount of Office delay. It follows that the examination delay pursuant to 37 C.F.R. § 1.702(a)(1) remains 186 days.

The Office acknowledges submission of the $200.00 fee set forth in 37 CFR 1.18(e) for consideration of the application for patent term adjustment under 37 CFR 1.705(b).

Applicants are reminded that any delays by the Office pursuant to 37 CFR 1.702(a)(4) and 1.702(b) and any applicant delays under 37 CFR 1.704(c)(10) will be calculated at the time of the issuance of the patent and applicants will be notified in the

Issue Notification letter that is mailed to applicants approximately three weeks prior to issuance.

Any request for reconsideration of the patent term adjustment indicated on the patent must be timely filed within 2 months after issuance pursuant to 37 CFR 1.705(d) and must include payment of the required fee under 37 CFR 1.18(e).

The Office of Data Management has been advised of this decision. This application is being referred to the Office of Data Management for issuance of the patent.

Telephone inquiries specific to this decision should be directed to Kenya A. McLaughlin, Petitions Attorney, at (571) 272-3222.

Anthony Knight
Director
Office of Petitions

UNITED STATES PATENT AND TRADEMARK OFFICE

Commissioner for Patents
United States Patent and Trademark Office
P.O. Box 1450
Alexandria, VA 22313-1450
www.uspto.gov

MAILED
JAN 10 2011
OFFICE OF PETITIONS

COOPER & DUNHAM, LLP
30 Rockefeller Plaza
20th Floor
NEW YORK NY 10112

In re Application of :
Morell, et al. :
Application No. 10/416,439 : ON APPLICATION FOR
Filed: December 5, 2003 : PATENT TERM ADJUSTMENT
Atty Docket No. A20-048 :

This is in response to the COMMUNICATION IN RESPONSE TO AUGUST 2, 2010, RESPONSE ON APPLICATION FOR PATENT TERM ADJUSTMENT filed September 21, 2010, which is properly treated under 37 CFR 1.705(b). Applicants submit the adjustment to the patent term under 37 CFR 1.702(a)(1) and 1.703(a)(1) is three hundred and six (306) days, not one hundred and eight-six (186) days as the Office determined.

The application for patent term adjustment is **DISMISSED**.

The Office has updated the PALM and PAIR screens to reflect that the patent term adjustment determination at the time of the mailing of the notice of allowance is **0 days**. A copy of the updated PAIR screen, showing the corrected determination, is enclosed.

On December 22, 2009, the Office mailed the Determination of Patent Term Adjustment under 35 U.S.C. 154(b) in the above-identified application. The Notice stated that the patent term adjustment (PTA) to date is 17 days, which took into account a period of adjustment under 37 CFR 1.702(a)(1) of 186 days.

Applicants submit that the examination delay pursuant to 37 C.F.R. § 1.702(a)(1) should be 306 days, not 186 days. Specifically applicants state that:

> [t]he Examiner failed to account for the total claims pending in the application at the time the August10, 2005 non-final office action was issued. The Examiner correctly

> withdrew the August 10, 2005 Office Action by a November 2, 2005 Notice of Withdrawal of Action and replaced it with a restriction requirement on December 8, 2005. The December 8, 2005 restriction requirement was the first Communication from the U.S. Patent Office that qualified as a notice pursuant to 35 U.S.C. 132 in the subject application. Applicants maintain, therefore, that the correct date to calculate a PTO delay under 37 CFR 1.702(a)(1)…is the mailing date f the December 8, 2005 restriction requirement.

*Excerpt taken from COMMUNICATION IN RESPONSE TO AUGUST 2, 2010, RESPONSE ON APPLICATION FOR PATENT TERM ADJUSTMENT filed September 21, 2010, p. 3.*

Applicants' argument is not persuasive. Pursuant to 37 C.F.R. § 1.702(a),

> Subject to the provisions of 35 U.S.C. 154(b) and this subpart, the term of an original patent shall be adjusted if the issuance of the patent was delayed due to the failure of the Office to:
>
> (1) Mail at least one of a notification under 35 U.S.C. 132 or a notice of allowance under 35 U.S.C. 151 not later than fourteen months after the date on which the application was filed under 35 U.S.C. 111(a) or fulfilled the requirements of 35 U.S.C. 371 in an international application;

On August 10, 2005, the Office mailed a first notification under 35 U.S.C. 132. This was fourteen months and 186 days after the filing of the application. Accordingly, a period of adjustment of 186 days was entered for Office delay pursuant to 37 CFR 1.702(a)(1). A review of the record confirms that this was the proper period of adjustment for Office delay.

The subsequent mailing of a communication by the examiner altering the previous action does not negate the fact that the Office took action in this application within the meaning of § 1.702(a)(1) on August 10, 2005. The examiner does not have the authority to vacate, rescind, or withdraw an Office action. Unless vacated by the Technology Center Director, for purposes of calculating patent term adjustment, the action originally

mailed by the examiner on August 10, 2005 will be used to calculate the amount of Office delay. It follows that the examination delay pursuant to 37 C.F.R. § 1.702(a)(1) remains 186 days.

Further review of the application history reveals that applicants should have been assessed a delay under 37 CFR 1.704(b)[1] for filing a reply in excess of the three month period from the December 22, 2009, mailing date of the Notice of Allowance and Issue Fee Due. On December 22, 2009, a Notice of Allowance and Issue Fee Due was mailed. On March 26, 2010, applicants filed a response to the Notice of Allowance and Issue Fee Due[2]. Thus, applicant failed to engage in reasonable efforts to conclude processing or examination of this application. Accordingly, the period of adjustment set forth in § 1.703 should have been reduced under 37 CFR 1.704(b) by 5 days, the number of days in the period beginning on the day after the date

---

[1] 37 CFR 1.704(b) states:

> With respect to the grounds for adjustment set forth in §§ 1.702(a) through (e), and in particular the ground of adjustment set forth in § 1.702(b), an applicant shall be deemed to have failed to engage in reasonable efforts to conclude processing or examination of an application for the cumulative total of any periods of time in excess of three months that are taken to reply to any notice or action by the Office making any rejection, objection, argument, or other request, measuring such three-month period from the date the notice or action was mailed or given to the applicant, in which case the period of adjustment set forth in § 1.703 shall be reduced by the number of days, if any, beginning on the day after the date that is three months after the date of mailing or transmission of the Office communication notifying the applicant of the rejection, objection, argument, or other request and ending on the date the reply was filed. The period, or shortened statutory period, for reply that is set in the Office action or notice has no effect on the three-month period set forth in this paragraph.

[2] It is noted that the Issue Fee Transmittal Form included a certificate under 37 CFR 1.8, dated March 22, 2010, The Office notes that 35 U.S.C. 154(b)(2)(C)(ii) does not require that a reply be filed in the Office within its three month grace period, but simply specifies that there is this three month period. For purposes of the determination of reduction to the patent term adjustment, no consideration is given for the date the response was deposited with the United States Postal Service under 37 CFR 1.8. The provisions of 37 CFR 1.8 have no effect on three month period for reply set forth under 37 CFR 1.704(b). Accordingly, the reduction to the patent term adjustment of 4 days is warranted.

that is three months after the date of mailing of the Notice of Allowance and Issue Fee Due, March 23, 2010, and ending on the date the reply was filed, March 26, 2010. **A period of reduction of 4 days will be entered.**

Further review of the application file history reveals that on December 22, 2009, a Notice of Allowance and Issue Fee Due was mailed. On March 26, 2010, applicants filed anamendment under 37 CFR 1.312. It is noted that 37 CFR 1.704(c)(10) provides that:

> Submission of an amendment under § 1.312 or other paper after a notice of allowance has been given or mailed, in which case the period of adjustment set forth in § 1.703 shall be reduced by the lesser of:
>
> (i) The number of days, if any, beginning on the date the amendment under § 1.312 or other paper was filed and ending on the mailing date of the Office action or notice in response to the amendment under § 1.312 or such other paper;
>
> or
>
> (ii) Four months;

In this instance, the record reveals that the Office took action in response to the filing of amendment under § 1.312 on May 17, 2010. Accordingly, the period of adjustment of the term of the patent should be reduced by 53 days, beginning on the date the amendment under 37 CFR 1.312 was filed, March 26, 2010, and ending on the mailing date of the response to the amendment under 37 CFR 1.312 was mailed, May 17, 2010. **Accordingly, a period of reduction of 53 days will be entered.**

It is noted that the aforementioned periods of reduction to the patent term adjustment under 37 CFR 1.704(b) and 37 CFR 1.704(c)(10) overlap by one (1) day—March 26, 2010. **Accordingly, the patent term will be adjusted by 1 day in due consideration for the period of overlap.**

In view thereof, the patent term adjustment is zero (0) days (204 days of Office delay - 243 days of applicant delay).

Deposit account 03-3125 will be charged $200.00 fee set forth in 37 CFR 1.18(e) for consideration of the application for patent term adjustment under 37 CFR 1.705(b).

Applicants are reminded that any delays by the Office pursuant to 37 CFR 1.702(a)(4) and 1.702(b) and any applicant delays under 37 CFR 1.704(c)(10) will be calculated at the time of the issuance of the patent and applicants will be notified in the Issue Notification letter that is mailed to applicants approximately three weeks prior to issuance.

Any request for reconsideration of the patent term adjustment indicated on the patent must be timely filed within 2 months after issuance pursuant to 37 CFR 1.705(d) and must include payment of the required fee under 37 CFR 1.18(e).

The Office of Data Management has been advised of this decision. This application is being referred to the Office of Data Management for issuance of the patent.

Telephone inquiries specific to this decision should be directed to the undersigned, at (571) 272-3222.

/Kenya A. McLaughlin/

Kenya A. McLaughlin
Petitions Attorney
Office of Petitions

Enclosure: Copy of REVISED PALM Screen

# Patent Term Adjustments

PTA/PTE Information | Patent Term Adjustment | Patent Term Extension

Application Number*: 10416439 Search | Explanation of PTA Calculation | Explanation of PTE Calculation

## PTA Calculations for Application: 10416439

| | | | |
|---|---|---|---|
| Application Filing Date | 12/05/2003 | OverLapping Days Between (A and B) or (A and C) | 0 |
| Issue Date of Patent | | Non-Overlapping USPTO Delays: | 204 |
| A Delays | 204 | PTO Manual Adjustment | -56 |
| B Delays | 0 | Applicant Delay (APPL) | 187 |
| C Delays | 0 | Total PTA (days) | 0 |

* - Sorted Column

## File Contents History

| Action Number | Action Recorded Date | Action Due Date | Action Code | Action Description | Duration PTO | Duration APPL | Parent Action Number |
|---|---|---|---|---|---|---|---|
| 126 | 01/06/2011 | | P028 | Adjustment of PTA Calculation by PTO | | 56 | 0 |
| 105 | 12/22/2009 | | MN/=. | Mail Notice of Allowance | | | 0 |
| 104 | 12/18/2009 | | IREV | Issue Revision Completed | | | 0 |
| 103 | 12/16/2009 | | ACRE | Allowed Case Returned to the Examiner for Clerical Processing | | | 0 |
| 102 | 12/16/2009 | | DVER | Document Verification | | | 0 |
| 101 | 12/16/2009 | | N/=. | Notice of Allowance Data Verification Completed | | | 0 |
| 99 | 12/16/2009 | | EX.A | Examiner's Amendment Communication | | | 0 |
| 98 | 12/16/2009 | | CNTA | Notice of Allowability | | | 0 |
| 100 | 12/10/2009 | | EXIN | Examiner Interview Summary Record (PTOL - 413) | | | 0 |
| 92 | 09/27/2009 | | FWDX | Date Forwarded to Examiner | | | 0 |
| 97 | 09/25/2009 | | IDSC | Information Disclosure Statement considered | | | 0 |
| 95 | 09/25/2009 | 09/08/2009 | M844 | Information Disclosure Statement (IDS) Filed | | 17 | 91 |
| 94 | 09/25/2009 | | WIDS | Information Disclosure Statement (IDS) Filed | | | 0 |
| 93 | 09/08/2009 | | C602 | Oath or Declaration Filed (Including Supplemental) | | | 0 |
| 91 | 09/08/2009 | 07/03/2009 | A... | Response after Non-Final Action | | 67 | 88 |
| 90 | 09/08/2009 | | XT/G | Request for Extension of Time - Granted | | | 0 |
| 89 | 04/03/2009 | | MW/AC | Mail Notice of Withdrawn Action | | | 0 |
| 88 | 04/03/2009 | | MCTNF | Mail Non-Final Rejection | | | 0 |
| 87 | 03/30/2009 | | CTNF | Non-Final Rejection | | | 0 |
| 86 | 03/30/2009 | | FWDX | Date Forwarded to Examiner | | | 0 |
| 85 | 03/30/2009 | | W/AC | Letter Withdrawing / Vacating Office Action | | | 0 |
| 84 | 03/16/2009 | | MPTGR | Mail-Petition Decision - Granted | | | 0 |
| 83 | 03/13/2009 | | PTGR | Petition Decision - Granted | | | 0 |
| 82 | 02/06/2009 | | PET. | Petition Entered | | | 0 |
| 81 | 12/17/2008 | | C.ADB | Correspondence Address Change | | | 0 |
| 80 | 12/08/2008 | 12/04/2008 | MCTFR | Mail Final Rejection (PTOL - 326) | 4 | | 77 |
| 79 | 12/08/2008 | | CTFR | Final Rejection | | | 0 |
| 78 | 10/02/2008 | | FWDX | Date Forwarded to Examiner | | | 0 |
| 77 | 08/04/2008 | 06/30/2008 | A... | Response after Non-Final Action | | 35 | 74 |
| 76 | 08/04/2008 | | XT/G | Request for Extension of Time - Granted | | | 0 |
| 74 | 03/31/2008 | | MCTNF | Mail Non-Final Rejection | | | 0 |
| 73 | 03/28/2008 | | CTNF | Non-Final Rejection | | | 0 |
| 68 | 01/14/2008 | | FWDX | Date Forwarded to Examiner | | | 0 |
| 72 | 12/17/2007 | | IDSC | Information Disclosure Statement considered | | | 0 |
| 71 | 12/17/2007 | | RCAP | Reference capture on IDS | | | 0 |
| 70 | 12/17/2007 | 12/17/2007 | M844 | Information Disclosure Statement (IDS) Filed | | | 67 |
| 69 | 12/17/2007 | | AF/D | Affidavit(s) (Rule 131 or 132) or Exhibit(s) Received | | | 0 |
| 67 | 12/17/2007 | 11/13/2007 | A... | Response after Non-Final Action | | 34 | 62 |
| 66 | 12/17/2007 | | XT/G | Request for Extension of Time - Granted | | | 0 |
| 65 | 12/17/2007 | | WIDS | Information Disclosure Statement (IDS) Filed | | | 0 |
| 64 | 11/30/2007 | | MEXIN | Mail Examiner Interview Summary (PTOL - 413) | | | 0 |
| 63 | 11/28/2007 | | EXIN | Examiner Interview Summary Record (PTOL - 413) | | | 0 |
| 62 | 08/13/2007 | | MCTNF | Mail Non-Final Rejection | | | 0 |
| 61 | 08/06/2007 | | CTNF | Non-Final Rejection | | | 0 |
| 60 | 07/24/2007 | | LET. | Miscellaneous Incoming Letter | | | 0 |
| 59 | 07/13/2007 | | MEXIN | Mail Examiner Interview Summary (PTOL - 413) | | | 0 |
| 58 | 07/10/2007 | | EXIN | Examiner Interview Summary Record (PTOL - 413) | | | 0 |
| 57 | 06/25/2007 | | N/AP | Notice of Appeal Filed | | | 0 |
| 56 | 06/18/2007 | | MCTAV | Mail Advisory Action (PTOL - 303) | | | 0 |
| 55 | 06/14/2007 | | CTAV | Advisory Action (PTOL-303) | | | 0 |
| 54 | 06/14/2007 | | MEXIN | Mail Examiner Interview Summary (PTOL - 413) | | | 0 |
| 52 | 06/04/2007 | | FWDX | Date Forwarded to Examiner | | | 0 |
| 51 | 05/24/2007 | 04/22/2007 | A.NE | Amendment after Final Rejection | | 32 | 49 |
| 50 | 05/24/2007 | | XT/G | Request for Extension of Time - Granted | | | 0 |
| 53 | 05/23/2007 | | EXIN | Examiner Interview Summary Record (PTOL - 413) | | | 0 |

| | | | | | | | |
|---|---|---|---|---|---|---|---|
| 49 | 01/22/2007 | 01/08/2007 | MCTFR | Mail Final Rejection (PTOL - 326) | 14 | | 45 |
| 48 | 01/17/2007 | | CTFR | Final Rejection | | | 0 |
| 46 | 01/08/2007 | | FWDX | Date Forwarded to Examiner | | | 0 |
| 47 | 09/08/2006 | | IDSC | Information Disclosure Statement considered | | | 0 |
| 45 | 09/08/2006 | 09/06/2006 | A... | Response after Non-Final Action | | 2 | 43 |
| 44.7 | 09/08/2006 | | M844 | Information Disclosure Statement (IDS) Filed | | | 0 |
| 44 | 09/08/2006 | | WIDS | Information Disclosure Statement (IDS) Filed | | | 0 |
| 43 | 06/06/2006 | | MCTNF | Mail Non-Final Rejection | | | 0 |
| 42 | 06/05/2006 | | CTNF | Non-Final Rejection | | | 0 |
| 40 | 02/16/2006 | | FWDX | Date Forwarded to Examiner | | | 0 |
| 39 | 02/06/2006 | | ELC. | Response to Election / Restriction Filed | | | 0 |
| 38 | 02/06/2006 | | XT/G | Request for Extension of Time - Granted | | | 0 |
| 37 | 12/08/2005 | | MCTRS | Mail Restriction Requirement | | | 0 |
| 36 | 12/06/2005 | | CTRS | Requirement for Restriction / Election | | | 0 |
| 35 | 11/02/2005 | | MW/AC | Mail Notice of Withdrawn Action | | | 0 |
| 34 | 11/02/2005 | | W/AC | Letter Withdrawing / Vacating Office Action | | | 0 |
| 33 | 08/10/2005 | 02/05/2005 | MCTNF | Mail Non-Final Rejection | 186 | | 17 |
| 32 | 08/08/2005 | | CTNF | Non-Final Rejection | | | 0 |
| 31 | 02/17/2005 | | DOCK | Case Docketed to Examiner in GAU | | | 0 |
| 29 | 08/02/2004 | | PA.. | Change in Power of Attorney (May Include Associate POA) | | | 0 |
| 28 | 07/23/2004 | | CRFE | CRF Is Good Technically / Entered into Database | | | 0 |
| 30 | 07/19/2004 | | LET. | Miscellaneous Incoming Letter | | | 0 |
| 27 | 06/20/2004 | | TSSCOMP | IFW TSS Processing by Tech Center Complete | | | 0 |
| 18 | 04/30/2004 | | L194 | Cleared by OIPE CSR | | | 0 |
| 16 | 04/22/2004 | | OIPE | Application Dispatched from OIPE | | | 0 |
| 15 | 04/22/2004 | | M903 | Notice of DO/EO Acceptance Mailed | | | 0 |
| 13 | 04/02/2004 | | CRFE | CRF Is Good Technically / Entered into Database | | | 0 |
| 11 | 03/18/2004 | | PA.. | Change in Power of Attorney (May Include Associate POA) | | | 0 |
| 12 | 03/17/2004 | | C.AD | Correspondence Address Change | | | 0 |
| 26 | 03/15/2004 | | A.PE | Preliminary Amendment | | | 0 |
| 10 | 03/01/2004 | | M916 | Notice of DO/EO Defective Response Mailed. | | | 0 |
| 6 | 02/05/2004 | | CRFD | CRF Is Flawed Technically / Not Entered into Database | | | 0 |
| 25 | 12/05/2003 | | A.PE | Preliminary Amendment | | | 0 |
| 17 | 12/05/2003 | | 371COMP | 371 Completion Date | | | 0 |
| 14 | 12/05/2003 | | CPYREF | Copy of references cited in International Search Report | | | 0 |
| 9 | 12/05/2003 | | ADDFLFEE | Additional Application Filing Fees | | | 0 |
| 8 | 12/05/2003 | | SEQLIST | A set of symbols and procedures, provided to the PTO on a set of computer listings, that describe in | | | 0 |
| 7 | 12/05/2003 | | OATHDECL | A statement by one or more inventors satisfying the requirement under 35 USC 115, Oath of the Applic | | | 0 |

Export to: Excel

UNITED STATES PATENT AND TRADEMARK OFFICE

Commissioner for Patents
United States Patent and Trademark Office
P.O. Box 1450
Alexandria, VA 22313-1450
www.uspto.gov

MAILED
JUL 25 2011
OFFICE OF PETITIONS

COOPER & DUNHAM, LLP
30 Rockefeller Plaza
20th Floor
NEW YORK NY 10112

| | | |
|---|---|---|
| In re Patent No. 7,888,499 | : | DECISION ON REQUEST |
| Morrell et al. | : | FOR |
| Issue Date: February 15, 2011 | : | RECONSIDERATION OF |
| Application No. 10/416,439 | : | PATENT TERM ADJUSTMENT |
| Filed: December 5, 2003 | : | and |
| Atty. Docket No. **A20-048** | : | NOTICE OF INTENT TO ISSUE |
| | : | CERTIFICATE OF CORRECTION |

This is a decision on the petition filed on April 14, 2011, which is being treated as a petition under 37 CFR 1.705(d) requesting that the patent term adjustment indicated on the above-identified patent be corrected to indicate that the term of the above-identified patent is extended or adjusted by two thousand, six hundred and eighty-six (1,686) days.

The petition to correct the patent term adjustment indicated on the above-identified patent to indicate that the term of the above-identified patent is extended or adjusted by one thousand, five hundred and sixteen (1,516) days is **GRANTED to the extent indicated herein.**

It is noted that patentees failed to account for the filing of the notice of appeal on June 25, 2007. The Office reminds patentees that the period consumed by appellate review, whether successful or not, is excluded from the calculation of B delay. See 35 U.S.C. 154(b)(1)(B)(ii). In this instance, the period consumed by appellate review is 50 days, beginning on the date on which the notice of appeal to the Board of Patent Appeals and Interferences was filed, June 25, 2007, and ending on the date the non-final Office action was mailed, August 13, 2007. Thus, the B delay is 1,693 days (1743 - 50).

Patentees again assert the examination delay pursuant to 37 CFR 1.702(a)(1) is 306 days, rather than the 186 days. Patentees' argument is not persuasive. The vacatur of an Office action sets aside or withdraws any rejection, objection or requirement in an Office action, as well as the requirement that the applicant timely reply to the Office action to avoid abandonment under 35 U.S.C. § 133. The vacatur of an Office action signifies that the Office action has been set aside, voided, or withdrawn as of the date of the vacating Office action or notice. The vacatur of an Office action, however, does **not** signify that the vacated Office action is void *ab initio* and is to be treated as if the USPTO had never issued the Office action. The patent examination process provided for in 35 U.S.C. §§ 131 and 132 contemplates that Office actions containing rejections, objections or requirements will be issued, and that the applicant will respond to these Office action, "with or without amendment." (35 U.S.C. § 132(a)). The mere fact that an examiner or other USPTO employee upon further reflection determines that an Office action, or that a rejection, objection or requirement in an Office action, is not correct and must be removed does not warrant treating the Office action as void *ab initio* and as if the USPTO had never issued the Office action.

The USPTO appreciates that there may be situations in which it is appropriate to treat an Office action or notice issued in an application as void *ab initio* and as if the USPTO had never issued the Office action. However, these would be extremely rare situations, such as the issuance of an Office action or notice by an employee who does not have the authority to issue that type of Office action or notice, the issuance of an Office action or notice in the wrong application, or the issuance of an Office action or notice containing language not appropriate for inclusion in an official document. In essence, the situations in which it is appropriate to treat an Office action or notice issued in an application as void *ab initio* and as if the USPTO had never issued the Office action are the situations in which it is appropriate to expunge an Office action or notice from the USPTO's record of the application. That is simply **not** the case in this situation.

Pursuant to 35 U.S.C. § 154(b)(1)(A)(ii), patentees are entitled to day-to-day adjustment if the USPTO delays the issuance of a patent by failing to respond to a reply by the applicant within

four months from the filing of the reply. The record of the above-identified patent indisputably indicates that the USPTO entered an Office action under 35 U.S.C. § 132, specifically a non-final Office action, on August 10, 2005, fourteen months and 186 days after the application was filed. The fact that the Office later set aside the non-final Office action of August 10, 2005 does not negate the fact that the Office mailed an action within the meaning of 35 U.S.C. § 154(b)(1)(A)(ii) and 37 CFR 1.702(a)(1) on August 10, 2005. Unless expunged from the record (which is not warranted in this situation), for purposes of calculating patent term adjustment, the Office action entered by the examiner on August 10, 2005, was properly used to determine whether the USPTO delayed the issuance of the above-identified patent by failing to mail an Office action within fourteen months of the filing of the application under of 35 U.S.C. § 154(b)(1)(A)(ii) and 37 CFR 1.702(a)(1). *See Changes to Implement Patent Term Adjustment under Twenty-Year Patent Term*, 65 *Fed. Reg.* 54366 (Sept. 18, 2000) (final rule). No further adjustment to the patent term is warranted in this instance.

Patentees' assert that a period of reduction under 37 CFR 1.704(c)(10) of 56 days was entered twice. A review of the file history reveals that a period totalling 56 days was entered twice. **Accordingly, the patent term will be adjusted by 56 days.**

It is noted that the periods of reduction to the patent term adjustment under 37 CFR 1.704(b) and 37 CFR 1.704(c)(10) overlap by one (1) day—March 26, 2010. **Accordingly, the patent term will be adjusted by 1 day in due consideration for the period of overlap.**

The patent term adjustment is 1,516 days (408 days of A delay + 1,693 days of B delay + 0 days of C delay - 222 days of overlap - 363 days of applicant delay.)

The Office will *sua sponte* issue a certificate of correction. Pursuant to 37 CFR 1.322, the Office will not issue a certificate of correction without first providing assignee or patentee an opportunity to be heard. Accordingly, patentees are given **one (1) month or thirty (30) days**, whichever is longer, from the mail date of this decision to respond. No extensions of time will be granted under § 1.136.

Nothing in this decision shall be construed as a waiver of the requirement of 35 U.S.C. 154(b)(4) that any civil action by an applicant dissatisfied with a determination made by the Director under 35 U.S.C. 154(b)(3) be filed in the United States District Court for the District of Columbia within 180 days after the grant of the patent

The Office is in receipt of the $200.00 for the fee set forth in 37 CFR 1.18(e) which is required to accompany a petition under 37 CFR 1.705(d). No additional fees are required.

The application is being forwarded to the Certificates of Correction Branch for issuance of a certificate of correction. The Office will issue a certificate of correction indicating that the term of the above-identified patent is extended or adjusted by one thousand six hundred and seventy six **(1,516)** days.

Telephone inquiries specific to this matter should be directed to the undersigned at (571) 272-3222.

/Kenya A. McLaughlin/

Kenya A. McLaughlin
Petitions Attorney
Office of Petitions

Enclosure: Copy of DRAFT Certificate of Correction

**DRAFT COPY**

UNITED STATES PATENT AND TRADEMARK OFFICE

# CERTIFICATE OF CORRECTION

PATENT : 7,888,499 B2

DATED : Feb. 15, 2011

INVENTOR(S) : Morrell et al.

It is certified that error appears in the above-identified patent and that said Letters Patent is hereby corrected as shown below:

On the cover page,

[*] Notice: Subject to any disclaimer, the term of this patent is extended or adjusted under 35 USC 154(b) by (1459) days

Delete the phrase "by 1459 days" and insert – by 1516 days--

PTO/SB/66 (03-09)
Approved for use through 03/31/2012. OMB 0651-0016
U.S. Patent and Trademark Office: U.S. DEPARTMENT OF COMMERCE
Under the Paperwork Reduction Act of 1995, no persons are required to respond to a collection of information unless it displays valid OMB control number.

# PETITION TO ACCEPT UNINTENTIONALLY DELAYED PAYMENT OF MAINTENANCE FEE IN AN EXPIRED PATENT (37 CFR 1.378(c))

| Patent Number | Issue Date (YYYY-MM-DD) | Application Number | Filing Date (YYYY-MM-DD) | Docket Number (if applicable) |
|---|---|---|---|---|
| 7219291 | 2007-05-15 | 10416484 | 2003-09-15 | |

CAUTION: Maintenance fee (and surcharge, if any) payment must correctly identify: (1) the patent number and (2) the application number of the actual U.S. application leading to issuance of that patent to ensure the fee(s) is/are associated with the correct patent. 37 CFR 1.366(c) and (d).

SMALL ENTITY
☐ Patentee claims, or has previously claimed, small entity status. See 37 CFR 1.27.

LOSS OF ENTITLEMENT TO SMALL ENTITY STATUS
☐ Patentee is no longer entitled to small entity status. See 37 CFR 1.27(g)

| NOT Small Entity | | Small Entity | |
|---|---|---|---|
| Fee | Code | Fee | Code |
| ◉ 3 ½ year | (1551) | ○ 3 ½ year | (2551) |
| ○ 7 ½ year | (1552) | ○ 7 ½ year | (2552) |
| ○ 11 ½ year | (1553) | ○ 11 ½ year | (2553) |

SURCHARGE
The surcharge required by 37 CFR 1.20(i)(2) (Fee Code 1558) must be paid as a condition of accepting unintentionally delayed payment of the maintenance fee.

MAINTENANCE FEE (37 CFR 1.20(e)-(g))
The appropriate maintenance fee must be submitted with this petition.

STATEMENT
THE UNDERSIGNED CERTIFIES THAT THE DELAY IN PAYMENT OF THE MAINTENANCE FEE TO THIS PATENT WAS UNINTENTIONAL

PETITIONER(S) REQUEST THAT THE DELAYED PAYMENT OF THE MAINTENANCE FEE BE ACCEPTED AND THE PATENT REINSTATED

THIS PORTION MUST BE COMPLETED BY THE SIGNATORY OR SIGNATORIES

37 CFR 1.378(d) states: "Any petition under this section must be signed by an attorney or agent registered to practice before the Patent and Trademark Office, or by the patentee, the assignee, or other party in interest."

I certify, in accordance with 37 CFR 1.4(d)(4) that I am

◉ An attorney or agent registered to practice before the Patent and Trademark Office

○ A sole patentee

○ A joint patentee; I certify that I am authorized to sign this submission on behalf of all the other patentees.

○ A joint patentee; all of whom are signing this e-petition

○ The assignee of record of the entire interest

Under the Paperwork Reduction Act of 1995, no persons are required to respond to a collection of information unless it displays valid OMB control number.

| Patent Practitioner | | | |
|---|---|---|---|
| A signature of the applicant or representative is required in accordance with 37 CFR 1.33 and 10.18. Please see 37 CFR 1.4(d) for the form of the signature | | | |
| Signature | /Benoit Castel/ | Date (YYYY-MM-DD) | 2012-01-25 |
| Name | Benoit Castel | Registration Number | 35041 |

This collection of information is required by 37 CFR 1.378(c). The information is required to obtain or retain a benefit by the public which is to file (and by the USPTO to process) an application. Confidentiality is governed by 35 U.S.C. 122 and 37 CFR 1.11 and 1.14. This collection is estimated to take 1 hour to complete, including gathering, preparing, and submitting the completed application form to the USPTO. Time will vary depending upon the individual case. Any comments on the amount of time you require to complete this form and/ or suggestions for reducing this burden, should be sent to the Chief Information Officer, U.S. Patent and Trademark Office, U.S. Department of Commerce, P.O. Box 1450, Alexandria, VA 22313-1450. DO NOT SEND FEES OR COMPLETED FORMS TO THIS ADDRESS. **This form can only be used when in conjunction with EFS-Web. If this form is mailed to the USPTO, it may cause delays in reinstating the patent.**

# Privacy Act Statement

The Privacy Act of 1974 (P.L. 93-579) requires that you be given certain information in connection with your submission of the attached form related to a patent application or patent. Accordingly, pursuant to the requirements of the Act, please be advised that: (1) the general authority for the collection of this information is 35 U.S.C. 2(b)(2); (2) furnishing of the information solicited is voluntary; and (3) the principal purpose for which the information is used by the U.S. Patent and Trademark Office is to process and/or examine your submission related to a patent application or patent. If you do not furnish the requested information, the U.S. Patent and Trademark Office may not be able to process and/or examine your submission, which may result in termination of proceedings or abandonment of the application or expiration of the patent.

The information provided by you in this form will be subject to the following routine uses:

1. The information on this form will be treated confidentially to the extent allowed under the Freedom of Information Act (5 U.S.C. 552) and the Privacy Act (5 U.S.C. 552a). Records from this system of records may be disclosed to the Department of Justice to determine whether the Freedom of Information Act requires disclosure of these records.

2. A record from this system of records may be disclosed, as a routine use, in the course of presenting evidence to a court, magistrate, or administrative tribunal, including disclosures to opposing counsel in the course of settlement negotiations.

3. A record in this system of records may be disclosed, as a routine use, to a Member of Congress submitting a request involving an individual, to whom the record pertains, when the individual has requested assistance from the Member with respect to the subject matter of the record.

4. A record in this system of records may be disclosed, as a routine use, to a contractor of the Agency having need for the information in order to perform a contract. Recipients of information shall be required to comply with the requirements of the Privacy Act of 1974, as amended, pursuant to 5 U.S.C. 552a(m).

5. A record related to an International Application filed under the Patent Cooperation Treaty in this system of records may be disclosed, as a routine use, to the International Bureau of the World Intellectual Property Organization, pursuant to the Patent Cooperation Treaty.

6. A record in this system of records may be disclosed, as a routine use, to another federal agency for purposes of National Security review (35 U.S.C. 181) and for review pursuant to the Atomic Energy Act (42 U.S.C. 218(c)).

7. A record from this system of records may be disclosed, as a routine use, to the Administrator, General Services, or his/her designee, during an inspection of records conducted by GSA as part of that agency's responsibility to recommend improvements in records management practices and programs, under authority of 44 U.S.C. 2904 and 2906. Such disclosure shall be made in accordance with the GSA regulations governing inspection of records for this purpose, and any other relevant (i.e., GSA or Commerce) directive. Such disclosure shall not be used to make determinations about individuals.

8. A record from this system of records may be disclosed, as a routine use, to the public after either publication of the application pursuant to 35 U.S.C. 122(b) or issuance of a patent pursuant to 35 U.S.C. 151. Further, a record may be disclosed, subject to the limitations of 37 CFR 1.14, as a routine use, to the public if the record was filed in an application which became abandoned or in which the proceedings were terminated and which application is referenced by either a published application, an application open to public inspections or an issued patent.

9. A record from this system of records may be disclosed, as a routine use, to a Federal, State, or local law enforcement agency, if the USPTO becomes aware of a violation or potential violation of law or regulation.

UNITED STATES PATENT AND TRADEMARK OFFICE

Commissioner for Patents
United States Patent and Trademark Office
P.O. Box 1450
Alexandria, VA 22313-1450
www.uspto.gov

In re Patent No. 7219291
Issue Date: May 15,2007
Application No. 10416484
Filed: September 15,2003
Attorney Docket No. F40.12-0014

:
:DECISION GRANTING PETITION
:UNDER 37 CFR 1.378(c)
:

This is a decision on the electronic petition, filed January 26,2012 ,under 37 CFR 1.378(c) to accept the unintentionally delayed payment of the 3.5 year maintenance fee for the above-identified patent.

The petition is **GRANTED**.

The maintenance fee is accepted, and the above-identified patent reinstated as of January 26,2012 .
This decision also constitutes notice that the fee has been accepted. An electronic copy of the petition and this decision has been created as an entry in the Image File Wrapper. Nevertheless, petitioner should print and retain an independent copy.

Telephone inquiries related to this electronic decision should be directed to the Electronic Business Center at 1-866-217-9197.

UNITED STATES PATENT AND TRADEMARK OFFICE

Commissioner for Patents
United States Patent and Trademark Office
P.O. Box 1450
Alexandria, VA 22313-1450
www.uspto.gov

GREENBLUM
& BERNSTEIN, P.L.C.
1950 ROLAND CLARKE PLACE
RESTON VA 20191

MAILED
NOV 17 2010
OFFICE OF PETITIONS

Patent No. 7,646,898
Issue Date: 12 January, 2010
In re Application of
Nowinski, et al.
Application No. 10/416,520
Filed: 19 August, 2003
Attorney Docket No. P23422

DECISION ON PETITION

This is a decision on the petition filed on 5 February, 2010, requesting correction of the name of the inventor/applicant, and considered for relief under 37 C.F.R §1.182.

The petition under 37 C.F.R §1.182 is **GRANTED**.

Petitioners always are directed to the guidance in the Commentary set forth at MPEP§605.04(c ) as to the proper procedure herein:

**605.04(c)Inventor Changes Name [R-5]**

In cases where an inventor's name has been changed after the application has been filed and the inventor desires to change his or her name on the application, he or she must submit a petition under 37 CFR 1.182. Applicants are also strongly encouraged to submit an application data sheet (37 CFR 1.76) showing the new name. The petition should be directed to the attention of the Office of Petitions. The petition must include an appropriate petition fee and **>a statement< signed by the inventor setting forth both names and the procedure whereby the change of name was effected, or a * copy of the court order.

Since amendments are not permitted after the payment of the issue fee (37 CFR 1.312), a petition under 37 CFR 1.182 to change the name of the inventor cannot be granted if filed after the payment of the issue fee.

If an application data sheet is not submitted, the petition may still be granted, but the patent may not reflect the correct spelling of the inventor's name.

If the petition is granted, if the application is maintained in paper with a file jacket label (i.e., the application is an 08/ or earlier series application), the original declaration must be marked in red ink, in the left margin "See paper No. _ for correction of inventor name" and the application should be sent to the Office of Initial Patent Examination (OIPE) for change of name on the file wrapper and in the PALM database. If the petition is granted in an Image File Wrapper (IFW) application or if the application is an 09/ or later series application, the spelling of the inventor's name should be changed in the Office computer records and a new PALM bib-data sheet should be printed. If the application is assigned, applicant should submit a corrected assignment document along with a cover sheet and the recording fee as set forth in 37 CFR 1.21(h) to the Assignment Division for a change in the assignment record.

## BACKGROUND

A search of the file indicates that:

The instant application was filed, Petitioner indicates, with an incorrect form as to an inventor's name—A. Thirunavuukarasuu—the name having been typed and signed in that form, rather than in the correct form of Arumugam Thirunavuukarasuu.

On 4 September, 2009, Petitioner indicated to the Office that the name of inventor/applicant should be corrected to overcome the incorrect form of the name of one of the inventors. (At that time Petitioner submitted no executed oath/declaration in that form and no updated application data sheet (ADS), the latter of which may not be required but should be included.) The petition was dismissed because Petitioner had failed to include with the petition and fee the required declaration by the inventor/applicant, signed in both forms of the inventor/applicant's name—that averred to have been incorrect and that averred to be correct. The petition was dismissed on 8 December, 2009.

On 5 February, 2010, Petitioner submitted with the petition (and fee previously paid) the required declaration by the inventor/applicant, signed in both forms of the inventor/applicant's name—that averred to have been incorrect and that averred to be correct.

The availability of applications and application papers online to applicants/practitioners who diligently associate their Customer Number with the respective application(s) now provides an applicant/practitioner on-demand information as to events/transactions in an application. Thus, now if one wishes to know the progress in and/or status of an application or the accuracy of the data therein, one need only look at the file online.

Out of an abundance of caution, Petitioners always are reminded that those registered to practice *and* all others who make representations before the Office must inquire into the underlying facts of representations made to the Office and support averments with the appropriate documentation–since all owe to the Office the continuing duty to disclose.[1]

CONCLUSION

The petition under 37 C.F.R. §1.182 is **granted.**

**This application is released to the Office of Patent Application Processing (OPAP) with instructions to reflect the correct statement of the inventor's name (formerly known as A. Thirunavuukarasuu) to ARUMUGAM THIRUNAVUUKARASUU, and to:**

- **issue a corrected filing receipt; and**
- **insert into the record the corrected bib sheet,**

**and so release to IFW File Storage.**

Telephone inquiries regarding this decision may be directed to the undersigned at (571) 272-3214—it is noted, however, that all practice before the Office is in writing (see: 37 C.F.R. §1.2[9]) and the proper authority for action on any matter in this regard are the statutes (35 U.S.C.), regulations (37 C.F.R.) and the commentary on policy (MPEP). Therefore, no telephone discussion may be controlling or considered authority for Petitioner's action(s).

/John J. Gillon, Jr./
John J. Gillon, Jr.
Senior Attorney
Office of Petitions

---

[1] See supplement of 17 June, 1999. The Patent and Trademark Office is relying on petitioner's duty of candor and good faith and accepting a statement made by Petitioner. See Changes to Patent Practice and Procedure, 62 Fed. Reg. at 53160 and 53178, 1203 Off. Gaz. Pat. Office at 88 and 103 (responses to comments 64 and 109)(applicant obligated under 37 C.F.R. §10.18 to inquire into the underlying facts and circumstances when providing statements to the Patent and Trademark Office). See specifically, the regulations at 37 C.F.R. §10.18.

[9] The regulations at 37 C.F.R. §1.2 provide:
**§1.2 Business to be transacted in writing.**
All business with the Patent and Trademark Office should be transacted in writing. The personal attendance of applicants or their attorneys or agents at the Patent and Trademark Office is unnecessary. The action of the Patent and Trademark Office will be based exclusively on the written record in the Office. No attention will be paid to any alleged oral promise, stipulation, or understanding in relation to which there is disagreement or doubt.

UNITED STATES PATENT AND TRADEMARK OFFICE

3-30-2011

Commissioner for Patents
United States Patent and Trademark Office
P.O. Box 1450
Alexandria, VA 22313-1450
www.uspto.gov

Patent No : 7,650,809 B2
Ser. No. : 10/416,590
Inventor(s) : B. Werner, et. al.
Issued : January 26, 2010

Re: Request for Certificate of Correction

Consideration has been given your request for the issuance of a certificate of correction for the above-identified patent under the provisions of Rule(s) 1.322.

Assignees' names and addresses (assignment data) printed in a patent, are based *solely* on information supplied in the appropriate space for identifying the assignment data, i.e., item 3 of the Issue Fee Transmittal Form PTOL-85B. Granting of a request under 37 CFR 3.81(b) is required to correct applicant's error providing ***incorrect or erroneous*** assignment data, *before* issuance of a Certificate of Correction, under 37 CFR 1.323 *(see Manual of Patent Examining Procedures (M.P.E.P) Chp.1400, sect. 1481).* This procedure is required *at any time after the issue fee is paid*, including after issuance of the patent.

In view of the foregoing, your request is hereby denied.

A request to correct the Assignee under 37 CFR 3.81(b) should include:

A. **the processing fee set forth in 37 CFR 1.17(i) (currently $130);**
B. a statement that the failure to include the correct assignee name on the PTOL-85B was inadvertent; and
C. a copy of the Notice of Recordation of Assignment Document, reflecting the reel and frame number where the assignment(s) is recorded and/or reflecting proof of *the date* the assignment was submitted for recordation.

*In the Request*, Applicant(s) may request that the file be forwarded to Certificates of Correction Branch, for issuance of a Certificate of Correction, if the Request is granted.

Any request under 37 CFR 3.81(b) should be directed to the following address or facsimile number:

By mail: Mail Stop PETITIONS
Commissioner for Patents
Post Office Box 1450
Alexandria, VA 22313-1450

By hand: Customer Service Window
Mail Stop Petitions
Randolph Building
401 Dulany Street
Alexandria, VA 22314

By fax: (703) 872-9306
ATTN: Office of Petitions

If a fee (currently $100) was previously submitted for consideration of a Request for Certificate of Correction, under CFR 1.323, to correct assignment data, , no additional fee is required.

Eva James
For Mary Diggs
Decisions & Certificates
of Correction Branch
(571) 272-3422 or 703- 756 -1580

Kenyon & Kenyon
One Broadway
New York, NY 10004

ej

UNITED STATES PATENT AND TRADEMARK OFFICE

COMMISSIONER FOR PATENTS
UNITED STATES PATENT AND TRADEMARK OFFICE
P.O. BOX 1450
ALEXANDRIA, VA 22313-1450
www.uspto.gov

MAILED

SEP 07 2010

OFFICE OF PETITIONS

Gary M Cohen
Strafford Building Number Three
Suite 300
125 Strafford Avenue
Wayne PA 19102

In re Patent No. 7,740,480
Issued: June 22, 2010
Application No. 10/416,630
Filing or 371(c) Date: May 14, 2003
Dkt. No.: MICROM13

: DECISION ON APPLICATION FOR
: PATENT TERM ADJUSTMENT and
: NOTICE OF INTENT TO ISSUE
: CERTIFICATE OF CORRECTION
:

This is a decision on the petition filed on July 9, 2010 requesting that the patent term adjustment indicated on the above-identified patent be corrected to indicate that the term of the above-identified patent is extended or adjusted by 1601 days. This matter is being properly treated under 37 CFR 1.705(d).

The petition to correct the patent term adjustment indicated on the above-identified patent is **DISMISSED**.

The above-identified application matured into U.S. Patent No. 7,740,480 on June 22, 2010. the patent issued with a patent term adjustment of 966 days. The instant petition is timely filed in accordance with 37 CFR 1.705(d). Patentee contests the "B" delay of 35 days and assert that the patent is entitled to an additional 670 days in this regard.

The arguments presented by patentee have been carefully reviewed, but are not found persuasive. Review of the record has not revealed any error in the calculation of adjustment. It is thought that perhaps patentee has not considered the effect of the request for continued examination on the overall calculation of adjustment.

The period of adjustment pursuant to 37 CFR 1.702(a) is 339 days.

The period of adjustment pursuant to 37 CFR 1.702(b) is 35 days.

The period of adjustment pursuant to 37 CFR 1.702(b), or, "B" delay, is 35 days, from May 15, 2006 to June 18, 2006, the application having fulfilled the requirements for early commencement under 35 USC 371(f) and a request for continued examination having been filed on June 19, 2006. As the period from the filing date of the request for continued examination (RCE) to the issue date of the patent is not included in the "B" delay period, the over three year period begins

on May 15, 2006 and ends on June 18, 2006, the day before the RCE was filed. See, 35 U.S.C. 154(b)(1)(B)(i).

The period of adjustment pursuant to 37 CFR 1.702(e) is 831 days.

The period of applicant delay pursuant to 37 CFR 1.704 is 239 days.

Patentee's arguments concerning 37 CFR 1.703(b)(4) have been reviewed. However, the instant patent is not subject to consideration under 37 CFR 1.703(b)(4) because the appeal period transpired subsequent to the "B" delay.

In view thereof, at the time of issuance, the patent was entitled to an overall adjustment of 966 days (339 days under 37 CFR 1.703(a) + 35 days under 37 CFR 1.703(b) + 831 under 37 CFR 1.702(e) – 239 days of applicant delay per 37 CFR 1.704).

In view thereof, no adjustment to the patent term will be made.

Nothing in this decision shall be construed as a waiver of the requirement of 35 U.S.C. 154(b)(4) that any civil action by an applicant dissatisfied with a determination made by the Director under 35 U.S.C. 154(b)(3) be filed in the United States District Court for the District of Columbia within 180 days after the grant of the patent.

The Office acknowledges the previous submission of the $200.00 fee set forth in 37 CFR 1.18(e). No additional fees are required.

Telephone inquiries specific to this matter should be directed to the undersigned at (571) 272-3205.

*/ALESIA M. BROWN/*

Alesia M. Brown
Senior Petitions Attorney
Office of Petitions

UNITED STATES PATENT AND TRADEMARK OFFICE

Commissioner for Patents
United States Patent and Trademark Office
P.O. Box 1450
Alexandria, VA 22313-1450
www.uspto.gov

MAILED

OCT 21 2010

OFFICE OF PETITIONS

Richard L Mayer
Kenyon & Kenyon
One Broadway
New York NY 10004

| | | |
|---|---|---|
| In re Patent of Heimermann et al. | : | DECISION ON REQUEST |
| Patent No. 7,595,722 | : | FOR RECONSIDERATION OF |
| Issue Date: September 29, 2009 | : | PATENT TERM ADJUSTMENT |
| Application No. 10/416,639 | : | and |
| Filed: October 10, 2003 | : | NOTICE OF INTENT TO ISSUE |
| Atty. Docket No. 11150/72 | : | CERTIFICATE OF CORRECTION |

This is a decision on the petition filed on June 18, 2010, requesting that the patent term adjustment indicated on the above-identified patent be corrected to indicate that the term of the above-identified patent is extended or adjusted by three hundred eighty-three (383) days.

The petition was timely filed within one month of the mailing of a Notice Concerning Improper Calculation of Patent Term Adjustment Based Upon USPTO Improperly Measuring Reduction Period Under 37 CFR 1.704(c)(10)("the Notice"), mailed May 18, 2010, which vacated the previously mailed Decision on Request for Recalculation in View of Wyeth and Notice of Intent to Issue Certificate of Correction, mailed April 21, 2010. The Notice informed patentees that the patent term adjustment had been determined to be 170 days. Patentees were afforded thirty days/1 month to request reconsideration. Patentees timely filed the present petition on June 18, 2010.

The petition to correct the patent term adjustment indicated on the above-identified patent to indicate that the term of the above-identified patent is extended or adjusted by three hundred eighty-three (383) days is **GRANTED**.

The sole issue before the Office is the length of the period of delay under 35 U.S.C. 154(b)(1)(B)(i) ("B Delay"). In an international application, the B period of delay is based on the failure of the Office to issue a patent within three years after the national stage commences under 35 U.S.C. 371(b) or (f). See 1.702(b). Early processing was requested. However, the requirements under 35 U.S.C. 371(c) were not satisfied. The national stage commenced in this application on Wednesday, May 14, 2003, thirty months after the earliest claimed priority date of November 14, 2000. The maximum period of B Delay begins on

May 15, 2006, the day after three years after the application's commencement date and ends on the date the patent issued, September 29, 2009. The maximum period of B Delay is 1234 days.

Pursuant to 35 U.S.C. § 154(b)(1)(B)(ii), B Delay does not include "any time consumed by appellate review by the Board of Patent Appeals and Interferences." Therefore, the period beginning on the date the Notice of Appeal was filed, October 6, 2006, and ending on the date the Board rendered a decision affirming the examiner, January 29, 2009, is excluded from the period of B Delay.

The period of B Delay in this case is 387 days, which is 1234 days beginning on May 15, 2006, the day after the date three years after the commencement date, and ending on September 29, 2009, the date the patent issued, reduced 847 days of excluded appellate period beginning on October 6, 2006 and ending on January 29, 2009.

Therefore, correct patent term adjustment is 383 days, which is the sum of 95 days of delay under 35 U.S.C. § 154(b)(1)(A) ("A Delay") and 387 of B Delay, reduced by 99 days of Applicant delay.

The application is being forwarded to the Certificates of Correction Branch for issuance of a certificate of correction. The Office will issue a certificate of correction indicating that the term of the above-identified patent is extended or adjusted by **three hundred eighty-three (383)** days.

Telephone inquiries specific to this decision should be directed to the undersigned at (571) 272-3230.

Shirene Willis Brantley

Shirene Willis Brantley
Senior Petitions Attorney
Office of Petitions

Enclosure: Copy of DRAFT Certificate of Correction

UNITED STATES PATENT AND TRADEMARK OFFICE

# CERTIFICATE OF CORRECTION

PATENT : 7,595,722 B2

DATED : **September 29, 2009** **DRAFT**

INVENTOR(S) : Heimermann et al.

It is certified that error appears in the above-identified patent and that said Letters Patent is hereby corrected as shown below:

On the cover page,

[*] Notice: Subject to any disclaimer, the term of this patent is extended or adjusted under 35 U.S.C. 154(b) by 986 days

Delete the phrase "by 986 days" and insert – by 383 days--

UNITED STATES PATENT AND TRADEMARK OFFICE

Commissioner for Patents
United States Patent and Trademark Office
P.O. Box 1450
Alexandria, VA 22313-1450
www.uspto.gov

**PHILIPPE NOBILEAU**
**2 AVENUE FERNAND MARTIN**
**VILLEFRANCHE SUR MER 06230 FR FRANCE**

MAILED

AUG 05 2011

OFFICE OF PETITIONS

| | | |
|---|---|---|
| In re Patent No. 7,159,666 | : | |
| Issue Date: January 9, 2007 | : | |
| Application No. 10/416,772 | : | ON PETITION |
| Filed: May 15, 2003 | : | |
| | : | |

This is a decision on the petition under 37 CFR 1.378(c), filed June 20, 2011, to accept the unintentionally delayed payment of a maintenance fee for the above-identified patent.

The petition is **DISMISSED AS MOOT.**

The petition is unnecessary. The three and one-half year maintenance fee was timely paid on September 4, 2010, along with the surcharge for late payment within six months, therefore a petition is not required.

The surcharge and maintenance fee as authorized in the petition are unnecessary. Petitioner's credit card has not been charged an additional $490.00 maintenance fee nor the $1640.00 surcharge for unintentionally delayed payment of maintenance fee in an expired patent.

Telephone inquiries concerning this decision should be directed to Jose' G Dees at (571) 272-1569.

Christopher Bottorff
Petitions Examiner
Office of Petitions

UNITED STATES PATENT AND TRADEMARK OFFICE

Commissioner for Patents
United States Patent and Trademark Office
P.O. Box 1450
Alexandria, VA 22313-1450
www.uspto.gov

**JENNIFER A. HARCHICK**
**7761 WHITE HERON TRAIL**
**ALEXANDRIA, VA 22306**

MAILED
FEB 27 2012
OFFICE OF PETITIONS

| | | |
|---|---|---|
| In re Application of | : | |
| Mahmoud Nabih Youssef Haidar | : | |
| Application No. 10/416,807 | : | DECISION ON PETITION |
| Filed: May 15, 2003 | : | TO WITHDRAW |
| Attorney Docket No. 6068/PCT | : | FROM RECORD |

This is a decision on the Request to Withdraw as attorney or agent of record under 37 C.F.R. § 1.36(b), filed January 6, 2012.

The request is **APPROVED**.

A grantable request to withdraw as attorney/agent of record must be signed by every attorney/agent seeking to withdraw or contain a clear indication that one attorney is signing on behalf of another/others. A request to withdraw will not be approved unless at least 30 (thirty) days would remain between the date of approval and the later of the expiration date of a time to file a response or the expiration date of the maximum time period which can be extended under 37 C.F.R. § 1.136(a).

The request was signed by Jennifer A. Harchick. Jennifer A. Harchick has been withdrawn as attorneys or agents of record; all other attorneys remain of record.

The correspondence address of record remains unchanged.

Telephone inquiries concerning this decision should be directed to Terri Johnson at 571-272-2991.

/Terri Johnson/
Terri Johnson
Petitions Examiner
Office of Petitions

cc: **BREINER & BREINER, L.L.C.**
**115 NORTH HENRY STREET**
**ALEXANDRIA VA 22314**

UNITED STATES PATENT AND TRADEMARK OFFICE

Commissioner for Patents
United States Patent and Trademark Office
P.O. Box 1450
Alexandria, VA 22313-1450
www.uspto.gov

**Zuhair Al Kahzrajie**
**Glen Chass Lodge**
**Isle of Man**
**Port St Mary GB UNITED KINGDOM**

MAILED
FEB 28 2011
OFFICE OF PETITIONS

In re Application of :
Zuhair Al-Kahzrajie :
Application No. 10/416,808 :
Filed: May 6, 2003 :
Attorney Docket No. :

ON PETITION

This is in response to the Petition to Withdraw Holding of Abandonment, filed May 11, 2008, to revive the above-identified application.

The petition is **DISMISSED**.

Any request for reconsideration of this decision should be submitted within two (2) months from the mail date of this decision and be entitled "Renewed Petition to Withdraw the Holding of Abandonment under 37 CFR 1.181." *See* 37 CFR 1.181(f).

On October 15, 2007, the Office mailed a restriction requirement, which set a three month shortened statutory period to reply. The application became abandoned on January 16, 2008, for failure to submit a timely response to the restriction requirement. On July 9, 20008, the Office mailed a Notice of Abandonment.

In the present petition, petitioner states that he faxed in a response to the restriction requirement but that the response was never received by the Office. A review of the application file shows no response to the restriction requirement. Petitioner indicates that he has no proof of transmission of fax of the response. Without documented evidence of fax transmission of the response, the Office has no evidence that the response to the restriction requirement was filed.

Therefore, the petition to withdraw the holding of abandonment is **dismissed**.

**ALTERNATIVE VENUE**

Petitioner is strongly encouraged to consider filing a petition under 37 CFR 1.137(b) to revive an unintentionally abandoned application instead of filing a renewed petition under 37 CFR 1.181 or a petition under 37 CFR 1.137(a).

A grantable petition pursuant to 37 CFR 1.137(b) must be accompanied by:

(1) The reply required to the outstanding Office action or notice, unless previously filed. In nonprovisional utility application abandoned for failure to respond to a non-final Office action, the required reply may be met by filing either (A) an argument or amendment under 37 CFR 1.111 or (B) a continuing application under 37 CFR 1.53(b).

(2) The petition fee as set forth in 37 CFR 1.17(m), **$810.00 for a small entity**;

(3) A statement that the entire delay in filing the required reply from the due date for the reply until the filing of a grantable petition was unintentional. The Director may require additional information where there is a question whether the delay was unintentional.

A form for filing a petition to revive an unintentionally abandoned application accompanies this decision for petitioner's convenience. If petitioner desires to file a petition under 37 CFR 1.137(b) instead of filing a request for reconsideration, petitioner must complete the enclosed petition form (PTO/SB/64) and pay the $810.00 petition fee.

Petitioner may wish to consider hiring a registered patent attorney or agent to assist in the prosecution of this application. Additionally, petitioner is encouraged to contact the Inventors Assistance Center (IAC) by telephone at 800-786-9199 or 571-272-1000, Monday through Friday from 8:30 AM to 5:30 PM (EST). The IAC provides patent information and services to the public and is staffed by former Supervisory Patent Examiners and experienced Primary Examiners who answer general questions concerning patent examining policy and procedure.

Further correspondence with respect to this matter should be addressed as follows:

By mail: Mail Stop Petition
Commissioner for Patents
P.O. Box 1450
Alexandria, VA 22313-1450

By FAX: (571) 273-8300
Attn: Office of Petitions

By hand: Customer Service Window
Randolph Building
401 Dulany Street
Alexandria, VA 22314

Telephone inquiries related to this decision may be directed to the undersigned at (571) 272-6842.

Carl Friedman
Petitions Examiner
Office of Petitions

Enclosures: Petition For Revival Of An Application For Patent Abandoned Unintentionally Under 37 CFR 1.137(b); Form PTO/SB/64, Privacy Act Statement.

UNITED STATES PATENT AND TRADEMARK OFFICE

Commissioner for Patents
United States Patent and Trademark Office
P.O. Box 1450
Alexandria, VA 22313-1450
www.uspto.gov

**Zuhair Al Kahzrajie**
**Glen Chass Lodge**
**Isle of Man**
**Port St Mary GB UNITED KINGDOM**

MAILED
APR 14 2011
OFFICE OF PETITIONS

In re Application of :
Zuhair Al-Kahzrajie :
Application No. 10/416,808 :
Filed: May 6, 2003 :
Attorney Docket No. :

ON PETITION

This is in response to the renewed Petition to Withdraw Holding of Abandonment, filed April 4, 2011, to revive the above-identified application.

The petition is **DISMISSED**.

Any request for reconsideration of this decision should be submitted within two (2) months from the mail date of this decision and be entitled "Renewed Petition to Withdraw the Holding of Abandonment under 37 CFR 1.181." *See* 37 CFR 1.181(f).

Applicant filed a first petition to withdraw the holding of abandonment on May 11, 2008 and this petition was dismissed in a decision mailed February 28, 2011 for failure to provide proof that a response to a restriction requirement was timely filed.

In the renewed petition, petitioner requests reconsideration of the requirement to show proof that a response to the restriction requirement was faxed to the Office. Petitioner again indicates that he timely faxed a response to the restriction requirement but that he cannot provide documented evidence that the response was faxed.

The Office has a procedure wherein applicant can self verify that a response was filed on a specific date. 37 CFR 1.8 provides for certificate of mailing or transmission. This certificate can be used for fax transmissions. If such a certificate is used, and the paper is not received by the Office, the certificate can be used as proof that a response was faxed. Unfortunately, petitioner did not use this procedure. The file record shows no response to the restriction requirement, mailed February 16, 2007, was received and petitioner can provide no proof that the faxed response was filed.

As noted in the previous decision, without documented evidence of the fax transmission the petition cannot be granted.

Petitioner's arguments about any alleged errors the Office may or may not have made in the prosecution of this application has no bearing on applicant's responsibility to file a timely response to the restriction requirement.

As noted in the previous decision, petitioner may wish to consider filing a petition under 37 CFR 1.137(b) for unintentional abandonment of the application.

Further correspondence with respect to this matter should be addressed as follows:

By mail: Mail Stop Petition
Commissioner for Patents
P.O. Box 1450
Alexandria, VA 22313-1450

By FAX: (571) 273-8300
Attn: Office of Petitions

By hand: Customer Service Window
Randolph Building
401 Dulany Street
Alexandria, VA 22314

Telephone inquiries related to this decision may be directed to the undersigned at (571) 272-6842.

Carl Friedman
Petitions Examiner
Office of Petitions

UNITED STATES PATENT AND TRADEMARK OFFICE

Commissioner for Patents
United States Patent and Trademark Office
P.O. Box 1450
Alexandria, VA 22313-1450
www.uspto.gov

ZILKA-KOTAB, PC
P.O. BOX 721120
SAN JOSE, CA 95172-1120

MAILED
APR 11 2011
OFFICE OF PETITIONS

| | | |
|---|---|---|
| In re Application of | : | |
| Neil John Hursey | : | |
| Application No. 10/417,194 | : | DECISION ON PETITION |
| Filed: April 17, 2003 | : | TO WITHDRAW |
| Attorney Docket No. **NAI1P493/03.009.01** | : | FROM RECORD |
| | : | |

This is a decision on the Request to Withdraw as attorney or agent of record under 37 CFR § 1.36(b), filed February 24, 2011.

The request is **NOT APPROVED** as moot.

A review of the file record indicates that the power of attorney to attorneys/agents associated with Customer Number 28875 has been revoked by the assignee of the patent application on February 28, 2011. Therefore, petitioner no longer has power in the above-identified application. Accordingly, the request to withdraw under 37 CFR § 1.36(b) is moot.

All future communications from the Office will continue to be directed to the below-listed address until otherwise notified by applicant.

Telephone inquires concerning this decision should be directed to the undersigned at 571-272-4584.

/JoAnne Burke/
JoAnne Burke
Petitions Examiner
Office of Petitions

cc: Patent Capital Group
6119 McCommas Blvd
Dallas TX 75214

UNITED STATES PATENT AND TRADEMARK OFFICE

Commissioner for Patents
United States Patent and Trademark Office
P.O. Box 1450
Alexandria, VA 22313-1450
www.uspto.gov

**K&L GATES LLP**
**210 SIXTH AVENUE**
**PITTSBURGH PA 15222-2613**

**MAILED**
OCT 21 2010
**OFFICE OF PETITIONS**

| | | |
|---|---|---|
| In re Patent No. 7,098,294 | : | |
| Issued: August 29, 2006 | : | |
| Application No. 10/417,244 | : | ON PETITION |
| Filed: April 16, 2003 | : | |
| Attorney Docket No. 010500DIV | : | |

This is a notice regarding your request for acceptance of a fee deficiency submission under 37 CFR 1.28. On September 1, 1998, the Court of Appeals for the Federal Circuit held that 37 CFR 1.28(c) is the sole provision governing the time for correction of the erroneous payment of the issue fee as a small entity. **See DH Technology v. Synergystex International, Inc. 154 F.3d 1333, 47 USPQ2d 1865 (Fed. Cir. Sept. 1, 1998).**

The Office no longer investigates or rejects original or reissue applications under 37 CFR 1.56. **1098 Off. Gaz. Pat. Office 502 (January 3, 1989).** Therefore, nothing in this Notice is intended to imply that an investigation was done.

Your fee deficiency submission under 37 CFR 1.28 is hereby **ACCEPTED**.

This patent is no longer entitled to small entity status. Accordingly, all future fees paid in this patent must be paid at the large entity rate.

It is not apparent whether the person signing the instant petition was ever given a power of attorney or authorization of agent regarding this patent. In accordance with 37 CFR 1.34(a), the signature appearing on the petition shall constitute a representation to the United States Patent and Trademark Office that he/she is authorized to represent the particular party in whose behalf he/she acts. While, a courtesy copy of this decision is being mailed to the address given on the petition, the Office will mail all future correspondence solely to the address of record.

Telephone inquires concerning this decision should be directed to the undersigned at (571) 272-7751.

Joan Olszewski

Joan Olszewski
Petitions Examiner
Office of Petitions

cc: Kendal M. Sheets
CPA Global
225 Reinekers Lane, Suite 400
Alexandria, VA 22314

PTO/SB/66 (03-09)
Approved for use through 03/31/2012. OMB 0651-0016
U.S. Patent and Trademark Office: U.S. DEPARTMENT OF COMMERCE
Under the Paperwork Reduction Act of 1995, no persons are required to respond to a collection of information unless it displays valid OMB control number.

# PETITION TO ACCEPT UNINTENTIONALLY DELAYED PAYMENT OF MAINTENANCE FEE IN AN EXPIRED PATENT (37 CFR 1.378(c))

| Patent Number | Issue Date (YYYY-MM-DD) | Application Number | Filing Date (YYYY-MM-DD) | Docket Number (if applicable) |
|---|---|---|---|---|
| 7080027 | 2006-07-18 | 10417326 | 2003-04-17 | |

CAUTION: Maintenance fee (and surcharge, if any) payment must correctly identify: (1) the patent number and (2) the application number of the actual U.S. application leading to issuance of that patent to ensure the fee(s) is/are associated with the correct patent. 37 CFR 1.366(c) and (d).

SMALL ENTITY
☒ Patentee claims, or has previously claimed, small entity status. See 37 CFR 1.27.

LOSS OF ENTITLEMENT TO SMALL ENTITY STATUS
☐ Patentee is no longer entitled to small entity status. See 37 CFR 1.27(g)

| NOT Small Entity | | Small Entity | |
|---|---|---|---|
| Fee | Code | Fee | Code |
| ○ 3 ½ year | (1551) | ● 3 ½ year | (2551) |
| ○ 7 ½ year | (1552) | ○ 7 ½ year | (2552) |
| ○ 11 ½ year | (1553) | ○ 11 ½ year | (2553) |

SURCHARGE
The surcharge required by 37 CFR 1.20(i)(2) (Fee Code 1558) must be paid as a condition of accepting unintentionally delayed payment of the maintenance fee.

MAINTENANCE FEE (37 CFR 1.20(e)-(g))
The appropriate maintenance fee must be submitted with this petition.

STATEMENT
THE UNDERSIGNED CERTIFIES THAT THE DELAY IN PAYMENT OF THE MAINTENANCE FEE TO THIS PATENT WAS UNINTENTIONAL

PETITIONER(S) REQUEST THAT THE DELAYED PAYMENT OF THE MAINTENANCE FEE BE ACCEPTED AND THE PATENT REINSTATED

THIS PORTION MUST BE COMPLETED BY THE SIGNATORY OR SIGNATORIES

37 CFR 1.378(d) states: "Any petition under this section must be signed by an attorney or agent registered to practice before the Patent and Trademark Office, or by the patentee, the assignee, or other party in interest."

I certify, in accordance with 37 CFR 1.4(d)(4) that I am

○ An attorney or agent registered to practice before the Patent and Trademark Office

○ A sole patentee

○ A joint patentee; I certify that I am authorized to sign this submission on behalf of all the other patentees.

○ A joint patentee; all of whom are signing this e-petition

● The assignee of record of the entire interest

| The Assignee of record of the entire interest | | | |
|---|---|---|---|
| Under 37 CFR 3.71 an assignee becomes of record by filing a statement in compliance with 37 CFR 3.73(b).<br>Signature requirements are set forth in 37 CFR 1.4(d), and the undersigned certifies that he / she is empowered to act on behalf of the assignee of the entire interest | | | |
| Signature | /Terence K. O'Hara/ | Date (YYYY-MM-DD) | 2011-09-09 |
| Name | Terence K. O'Hara | | |
| Enter Reel and Frame Number | | Remove | |
| Reel Number | 014401 | Frame Number | 0862 |
| Click ADD for additional Reel Number and Frame Number | | Add | |

This collection of information is required by 37 CFR 1.378(c). The information is required to obtain or retain a benefit by the public which is to file (and by the USPTO to process) an application. Confidentiality is governed by 35 U.S.C. 122 and 37 CFR 1.11 and 1.14. This collection is estimated to take 1 hour to complete, including gathering, preparing, and submitting the completed application form to the USPTO. Time will vary depending upon the individual case. Any comments on the amount of time you require to complete this form and/ or suggestions for reducing this burden, should be sent to the Chief Information Officer, U.S. Patent and Trademark Office, U.S. Department of Commerce, P.O. Box 1450, Alexandria, VA 22313-1450. DO NOT SEND FEES OR COMPLETED FORMS TO THIS ADDRESS. **This form can only be used when in conjunction with EFS-Web. If this form is mailed to the USPTO, it may cause delays in reinstating the patent.**

# Privacy Act Statement

The Privacy Act of 1974 (P.L. 93-579) requires that you be given certain information in connection with your submission of the attached form related to a patent application or patent. Accordingly, pursuant to the requirements of the Act, please be advised that: (1) the general authority for the collection of this information is 35 U.S.C. 2(b)(2); (2) furnishing of the information solicited is voluntary; and (3) the principal purpose for which the information is used by the U.S. Patent and Trademark Office is to process and/or examine your submission related to a patent application or patent. If you do not furnish the requested information, the U.S. Patent and Trademark Office may not be able to process and/or examine your submission, which may result in termination of proceedings or abandonment of the application or expiration of the patent.

The information provided by you in this form will be subject to the following routine uses:

1. The information on this form will be treated confidentially to the extent allowed under the Freedom of Information Act (5 U.S.C. 552) and the Privacy Act (5 U.S.C. 552a). Records from this system of records may be disclosed to the Department of Justice to determine whether the Freedom of Information Act requires disclosure of these records.

2. A record from this system of records may be disclosed, as a routine use, in the course of presenting evidence to a court, magistrate, or administrative tribunal, including disclosures to opposing counsel in the course of settlement negotiations.

3. A record in this system of records may be disclosed, as a routine use, to a Member of Congress submitting a request involving an individual, to whom the record pertains, when the individual has requested assistance from the Member with respect to the subject matter of the record.

4. A record in this system of records may be disclosed, as a routine use, to a contractor of the Agency having need for the information in order to perform a contract. Recipients of information shall be required to comply with the requirements of the Privacy Act of 1974, as amended, pursuant to 5 U.S.C. 552a(m).

5. A record related to an International Application filed under the Patent Cooperation Treaty in this system of records may be disclosed, as a routine use, to the International Bureau of the World Intellectual Property Organization, pursuant to the Patent Cooperation Treaty.

6. A record in this system of records may be disclosed, as a routine use, to another federal agency for purposes of National Security review (35 U.S.C. 181) and for review pursuant to the Atomic Energy Act (42 U.S.C. 218(c)).

7. A record from this system of records may be disclosed, as a routine use, to the Administrator, General Services, or his/her designee, during an inspection of records conducted by GSA as part of that agency's responsibility to recommend improvements in records management practices and programs, under authority of 44 U.S.C. 2904 and 2906. Such disclosure shall be made in accordance with the GSA regulations governing inspection of records for this purpose, and any other relevant (i.e., GSA or Commerce) directive. Such disclosure shall not be used to make determinations about individuals.

8. A record from this system of records may be disclosed, as a routine use, to the public after either publication of the application pursuant to 35 U.S.C. 122(b) or issuance of a patent pursuant to 35 U.S.C. 151. Further, a record may be disclosed, subject to the limitations of 37 CFR 1.14, as a routine use, to the public if the record was filed in an application which became abandoned or in which the proceedings were terminated and which application is referenced by either a published application, an application open to public inspections or an issued patent.

9. A record from this system of records may be disclosed, as a routine use, to a Federal, State, or local law enforcement agency, if the USPTO becomes aware of a violation or potential violation of law or regulation.

UNITED STATES PATENT AND TRADEMARK OFFICE

Commissioner for Patents
United States Patent and Trademark Office
P.O. Box 1450
Alexandria, VA 22313-1450
www.uspto.gov

In re Patent No. 7080027
Issue Date: July 18,2006
Application No. 10417326
Filed: April 17,2003
Attorney Docket No. 110047.119US1

:
:DECISION GRANTING PETITION
:UNDER 37 CFR 1.378(c)
:

This is a decision on the electronic petition, filed September 9,2011 ,under 37 CFR 1.378(c) to accept the unintentionally delayed payment of the 3.5 year maintenance fee for the above-identified patent.

The petition is **GRANTED**.

The maintenance fee is accepted, and the above-identified patent reinstated as of September 9,2011 . This decision also constitutes notice that the fee has been accepted. An electronic copy of the petition and this decision has been created as an entry in the Image File Wrapper. Nevertheless, petitioner should print and retain an independent copy.

Telephone inquiries related to this electronic decision should be directed to the Electronic Business Center at 1-866-217-9197.

UNITED STATES PATENT AND TRADEMARK OFFICE

Commissioner for Patents
United States Patent and Trademark Office
P.O. Box 1450
Alexandria, VA 22313-1450
www.uspto.gov

LAWRENCE W. THONN, JR.
42139 S. ELMWOOD LOOP
HAMMOND, LA 70403

MAILED
MAR 07 2011
OFFICE OF PETITIONS

In re Patent No. 7,070,548 :
Issue Date: July 4, 2006 :
Application No. 10/417,483 : ON PETITION
Filed: April 17, 2003 :
Attorney Docket No. :

This is a decision on the petition under 37 CFR 1.378(b), filed October 10, 2010, to accept the unavoidably delayed payment of a maintenance fee for the above-identified patent.

The petition is **DISMISSED**.

If reconsideration of this decision is desired, a petition for reconsideration under 37 CFR 1.378(e) must be filed within TWO (2) MONTHS from the mail date of this decision. No extension of this 2-month time limit can be granted under 37 CFR 1.136(a) or (b). Any such petition for reconsideration must be accompanied by the petition fee of $400 as set forth in 37 CFR 1.17(f). The petition for reconsideration should include an exhaustive attempt to provide the lacking item(s) noted below, since, after a decision on the petition for reconsideration, the Director will undertake no further reconsideration or review of the matter.

The above-identified patent issued July 4, 2006. The 3 ½ year maintenance fee was due January 4, 2010, and could have been paid from July 4, 2009 through January 4, 2010 or, with a surcharge from January 5, 2010, through July 4, 2010. As the maintenance fee was not timely paid, this patent expired by operation of law at midnight on its fourth anniversary date: July 4, 2010.

A petition to accept the delayed payment of a maintenance fee under 35 USC 41(c) and 37 CFR 1.378(b) must be accompanied by (1) an adequate showing that the delay was unavoidable, since reasonable care was taken to insure that the maintenance fee would be paid timely, (2) payment of the appropriate maintenance fee, unless previously submitted, and (3) payment of the surcharge set forth in 37 CFR 1.20(i)(1). This petition lacks item (1) above.

The Commissioner may accept late payment of the maintenance fee if the delay is shown to the satisfaction of the Commissioner to have been "unavoidable". 35 USC 41(c)(1).

Petitioner asserts that the delay was due to not receiving the fee notice from the USPTO or petitioner may have misplaced the notice before it was read.

The showing of record is inadequate to establish unavoidable delay within the meaning of 37 CFR 1.378(b)(3).

37 CFR 1.378(b)(3) states that any petition to accept delayed payment of a maintenance fee must include:

> "A showing that the delay was unavoidable since reasonable care was taken to ensure that the maintenance fee would be paid timely and that the petition was filed promptly after the patentee was notified of, or otherwise became aware of, the expiration of the patent. The showing must enumerate the steps taken to ensure timely payment of the maintenance fee, the date, and the manner in which patentee became aware of the expiration of the patent, and the steps taken to file the petition promptly."

The record fails to disclose that the patentee took reasonable steps to ensure timely payment of the maintenance fee. In fact, the record indicates that no steps were taken by patentee to ensure timely payment of the maintenance fee. Since no steps were taken by patentee, 37 CFR 1.378(b) precludes acceptance of the delayed payment of the maintenance fee.

Unfortunately, any delay resulting from the actions or inactions of the patentee is binding upon petitioners as the successors in title. See Winkler v. Ladd, 221 F.Supp. 550, 552, 138 USPQ 666, 667 (D.D.C. 1963). While petitioners gained ownership of this patent on July 4, 2006, such merely gave petitioners standing to file the instant petition on or after that date. The delay resulting from their lack of knowledge of the need to pay maintenance fees does not excuse their delay. See Patent No. 4,409,763, 7 USPQ2d 1798, 1800 (Comm'r Pat. 1988), aff'd, Rydeen v. Quigg, 748 F. Supp. 900, 16 USPQ2d 1876 (D.D.C. 1990), aff'd, 937 F.2d 623 (Fed. Cir. 1991)(table), cert. denied, 502 U.S. 1075 (1992). Lastly, that one may have subsequently exercised diligence after their assumption of title and belated awareness of the need to pay the fee does not convert the preceding delay into unavoidable delay. See Kim v. Quigg, 718 F.Supp. 1280, 12 USPQ2d 1604 (E.D. Va 1989).

Further, a patentee's lack of knowledge of the need to pay the maintenance fee and the failure to receive the Maintenance Fee Reminder do not constitute unavoidable delay.[1] Under the statute and regulations, the Office has no duty to notify patentees of the requirement to pay maintenance fees or to notify patentees when the maintenance fees are due. The Office's mailing of Maintenance Fee Reminders is carried out strictly as a courtesy. Accordingly, it is solely the responsibility of the patentee to assure that the maintenance fee is timely paid to prevent

---

[1] *See* Patent No. 4,409,763, *supra; see also* "Final Rules for Patent Maintenance Fees" 49 Fed. Reg. 34716, 34722-34723 (August 31, 1984), *reprinted in* 1046 Off. Gaz. Pat. Office 28, 34 (September 25, 1984).

expiration of the patent. The lack of knowledge of the requirement to pay a maintenance fee and/or the failure to receive the Maintenance Fee Reminder will not shift the burden of monitoring the time for paying a maintenance fee from the patentee to the Office.[2]

Petitioner should consider filing a reconsideration petition under the unintentional standard of 37 CFR 1.378(c).

Regarding finances, it petitioner wisher to file under 37 CFR 1.378(c) -- the unintentional delay standard --, the surcharge is $1640.00. The $700 unavoidable delay surcharge submitted with the instant petition will be applied toward this unintentional standard surcharge. Petitioner must pay $1340 ($940 balance from the surcharge and $400 reconsideration fee). Regardless of the type of reconsideration petition petitioner files – under 37 CFR 1.378(b) or under 37 CFR 1.378(c) --, petitioner must submit a $400.00 reconsideration fee. Petitioner should note that if this petition is not renewed or is renewed and not granted, then the maintenance fee and post expiration surcharge are refundable. See 37 CFR 1.378(e) and such may be obtained by written request to Mail Stop 16, Refunds Section, at the USPTO address below.

Further correspondence with respect to this matter should be addressed as follows:

By Mail: Mail Stop PETITION
Commissioner for Patents
Post Office Box 1450
Alexandria, VA 22313-1450

By Hand: U. S. Patent and Trademark Office
Customer Service Window, Mail Stop Petitions
Randolph Building
401 Dulany Street
Alexandria, VA 22314

The centralized facsimile number is (571) 273-8300.

Telephone inquiries should be directed to Irvin Dingle at (571) 272-3210.

David Bucci
Petition Examiner
Office of Petitions

---

[2] Rydeen v. Quigg, 748 F. supp. at 900.

UNITED STATES PATENT AND TRADEMARK OFFICE

Commissioner for Patents
United States Patent and Trademark Office
P.O. Box 1450
Alexandria, VA 22313-1450
www.uspto.gov

LAWRENCE W. THONN, JR
42139 S. ELMWOOD LOOP
HAMMOND, LA 70403

**MAILED**
MAY 17 2011
**OFFICE OF PETITIONS**

In re Patent No. 7,070,548 :
Issue Date: July 4, 2006 :
Application No. 10/417,483 : ON PETITION
Filed: April 17, 2003 :
Attorney Docket No. :

This is a decision on the petition under 37 CFR 1.378(c), filed April 11, 2011, to accept the unintentionally delayed payment of a maintenance fee for the above-identified patent.

The petition is **GRANTED**.

This patent expired on July 4, 2010 for failure to pay the 3 ½ year maintenance fee. Since this petition was submitted within twenty-four months after the six-month grace period provided in 37 CFR 1.362(e), the petition was timely filed under the provisions of 37 CFR 1.378(c).

The maintenance fee is hereby accepted and the above-identified patent is reinstated as of the mail date of this decision.

Telephone inquiries concerning this decision should be directed to undersigned at (571) 272-1642.

/AMW/
April M. Wise
Petitions Examiner
Office of Petitions

PTO/SB/66 (03-09)
Approved for use through 03/31/2012. OMB 0651-0016
U.S. Patent and Trademark Office: U.S. DEPARTMENT OF COMMERCE
Under the Paperwork Reduction Act of 1995, no persons are required to respond to a collection of information unless it displays valid OMB control number.

# PETITION TO ACCEPT UNINTENTIONALLY DELAYED PAYMENT OF MAINTENANCE FEE IN AN EXPIRED PATENT (37 CFR 1.378(c))

| Patent Number | Issue Date (YYYY-MM-DD) | Application Number | Filing Date (YYYY-MM-DD) | Docket Number (if applicable) |
|---|---|---|---|---|
| 7104742 | 2006-09-12 | 10417625 | 2003-04-17 | FITTS |

CAUTION: Maintenance fee (and surcharge, if any) payment must correctly identify: (1) the patent number and (2) the application number of the actual U.S. application leading to issuance of that patent to ensure the fee(s) is/are associated with the correct patent. 37 CFR 1.366(c) and (d).

SMALL ENTITY
☒ Patentee claims, or has previously claimed, small entity status. See 37 CFR 1.27.

LOSS OF ENTITLEMENT TO SMALL ENTITY STATUS
☐ Patentee is no longer entitled to small entity status. See 37 CFR 1.27(g)

| NOT Small Entity | | Small Entity | |
|---|---|---|---|
| Fee | Code | Fee | Code |
| ○ 3 ½ year | (1551) | ◉ 3 ½ year | (2551) |
| ○ 7 ½ year | (1552) | ○ 7 ½ year | (2552) |
| ○ 11 ½ year | (1553) | ○ 11 ½ year | (2553) |

SURCHARGE
The surcharge required by 37 CFR 1.20(i)(2) (Fee Code 1558) must be paid as a condition of accepting unintentionally delayed payment of the maintenance fee.

MAINTENANCE FEE (37 CFR 1.20(e)-(g))
The appropriate maintenance fee must be submitted with this petition.

STATEMENT
THE UNDERSIGNED CERTIFIES THAT THE DELAY IN PAYMENT OF THE MAINTENANCE FEE TO THIS PATENT WAS UNINTENTIONAL

PETITIONER(S) REQUEST THAT THE DELAYED PAYMENT OF THE MAINTENANCE FEE BE ACCEPTED AND THE PATENT REINSTATED

THIS PORTION MUST BE COMPLETED BY THE SIGNATORY OR SIGNATORIES

37 CFR 1.378(d) states: "Any petition under this section must be signed by an attorney or agent registered to practice before the Patent and Trademark Office, or by the patentee, the assignee, or other party in interest."

I certify, in accordance with 37 CFR 1.4(d)(4) that I am

◉ An attorney or agent registered to practice before the Patent and Trademark Office

○ A sole patentee

○ A joint patentee; I certify that I am authorized to sign this submission on behalf of all the other patentees.

○ A joint patentee; all of whom are signing this e-petition

○ The assignee of record of the entire interest

Under the Paperwork Reduction Act of 1995, no persons are required to respond to a collection of information unless it displays valid OMB control number.

| Patent Practitioner | | | |
|---|---|---|---|
| A signature of the applicant or representative is required in accordance with 37 CFR 1.33 and 10.18. Please see 37 CFR 1.4(d) for the form of the signature | | | |
| Signature | /karen tripp/ | Date (YYYY-MM-DD) | 2010-11-16 |
| Name | Karen B. Tripp | Registration Number | 30452 |

This collection of information is required by 37 CFR 1.378(c). The information is required to obtain or retain a benefit by the public which is to file (and by the USPTO to process) an application. Confidentiality is governed by 35 U.S.C. 122 and 37 CFR 1.11 and 1.14. This collection is estimated to take 1 hour to complete, including gathering, preparing, and submitting the completed application form to the USPTO. Time will vary depending upon the individual case. Any comments on the amount of time you require to complete this form and/ or suggestions for reducing this burden, should be sent to the Chief Information Officer, U.S. Patent and Trademark Office, U.S. Department of Commerce, P.O. Box 1450, Alexandria, VA 22313-1450. DO NOT SEND FEES OR COMPLETED FORMS TO THIS ADDRESS. **This form can only be used when in conjunction with EFS-Web. If this form is mailed to the USPTO, it may cause delays in reinstating the patent.**

# Privacy Act Statement

The Privacy Act of 1974 (P.L. 93-579) requires that you be given certain information in connection with your submission of the attached form related to a patent application or patent. Accordingly, pursuant to the requirements of the Act, please be advised that: (1) the general authority for the collection of this information is 35 U.S.C. 2(b)(2); (2) furnishing of the information solicited is voluntary; and (3) the principal purpose for which the information is used by the U.S. Patent and Trademark Office is to process and/or examine your submission related to a patent application or patent. If you do not furnish the requested information, the U.S. Patent and Trademark Office may not be able to process and/or examine your submission, which may result in termination of proceedings or abandonment of the application or expiration of the patent.

The information provided by you in this form will be subject to the following routine uses:

1. The information on this form will be treated confidentially to the extent allowed under the Freedom of Information Act (5 U.S.C. 552) and the Privacy Act (5 U.S.C. 552a). Records from this system of records may be disclosed to the Department of Justice to determine whether the Freedom of Information Act requires disclosure of these records.

2. A record from this system of records may be disclosed, as a routine use, in the course of presenting evidence to a court, magistrate, or administrative tribunal, including disclosures to opposing counsel in the course of settlement negotiations.

3. A record in this system of records may be disclosed, as a routine use, to a Member of Congress submitting a request involving an individual, to whom the record pertains, when the individual has requested assistance from the Member with respect to the subject matter of the record.

4. A record in this system of records may be disclosed, as a routine use, to a contractor of the Agency having need for the information in order to perform a contract. Recipients of information shall be required to comply with the requirements of the Privacy Act of 1974, as amended, pursuant to 5 U.S.C. 552a(m).

5. A record related to an International Application filed under the Patent Cooperation Treaty in this system of records may be disclosed, as a routine use, to the International Bureau of the World Intellectual Property Organization, pursuant to the Patent Cooperation Treaty.

6. A record in this system of records may be disclosed, as a routine use, to another federal agency for purposes of National Security review (35 U.S.C. 181) and for review pursuant to the Atomic Energy Act (42 U.S.C. 218(c)).

7. A record from this system of records may be disclosed, as a routine use, to the Administrator, General Services, or his/her designee, during an inspection of records conducted by GSA as part of that agency's responsibility to recommend improvements in records management practices and programs, under authority of 44 U.S.C. 2904 and 2906. Such disclosure shall be made in accordance with the GSA regulations governing inspection of records for this purpose, and any other relevant (i.e., GSA or Commerce) directive. Such disclosure shall not be used to make determinations about individuals.

8. A record from this system of records may be disclosed, as a routine use, to the public after either publication of the application pursuant to 35 U.S.C. 122(b) or issuance of a patent pursuant to 35 U.S.C. 151. Further, a record may be disclosed, subject to the limitations of 37 CFR 1.14, as a routine use, to the public if the record was filed in an application which became abandoned or in which the proceedings were terminated and which application is referenced by either a published application, an application open to public inspections or an issued patent.

9. A record from this system of records may be disclosed, as a routine use, to a Federal, State, or local law enforcement agency, if the USPTO becomes aware of a violation or potential violation of law or regulation.

UNITED STATES PATENT AND TRADEMARK OFFICE

Commissioner for Patents
United States Patent and Trademark Office
P.O. Box 1450
Alexandria, VA 22313-1450
www.uspto.gov

In re Patent No. 7104742
Issue Date: September 12,2006
Application No. 10417625
Filed: April 17,2003
Attorney Docket No. FITTS:001

:
:DECISION GRANTING PETITION
:UNDER 37 CFR 1.378(c)
:

This is a decision on the electronic petition, filed November 16,2010 ,under 37 CFR 1.378(c) to accept the unintentionally delayed payment of the 3.5 year maintenance fee for the above-identified patent.

The petition is **GRANTED**.

The maintenance fee is accepted, and the above-identified patent reinstated as of November 16,2010 . This decision also constitutes notice that the fee has been accepted. An electronic copy of the petition and this decision has been created as an entry in the Image File Wrapper. Nevertheless, petitioner should print and retain an independent copy.

Telephone inquiries related to this electronic decision should be directed to the Electronic Business Center at 1-866-217-9197.

UNITED STATES PATENT AND TRADEMARK OFFICE

Commissioner for Patents
United States Patent and Trademark Office
P.O. Box 1450
Alexandria, VA 22313-1450
www.uspto.gov

**MORRISON & FOERSTER LLP**
**12531 HIGH BLUFF DRIVE**
**SUITE 100**
**SAN DIEGO CA 92130-2040**

MAILED
AUG 26 2010
OFFICE OF PETITIONS

| | | |
|---|---|---|
| In re Application of | : | |
| Paul Tardi et al | : | |
| Application No. 10/417,631 | : | DECISION GRANTING PETITION |
| Filed: April 16, 2003 | : | UNDER 37 CFR 1.313(c)(2) |
| Attorney Docket No. 532552000101 | : | |

This is a decision on the petition under 37 CFR 1.313(c)(2), filed August 24, 2010, to withdraw the above-identified application from issue after payment of the issue fee.

The petition is **GRANTED**.

The above-identified application is withdrawn from issue for consideration of a submission under 37 CFR 1.114 (request for continued examination). *See* 37 CFR 1.313(c)(2).

***Petitioner is advised that the issue fee paid on May 7, 2010 cannot be refunded. If, however, this application is again allowed, petitioner may request that it be applied towards the issue fee required by the new Notice of Allowance.***[1]

Telephone inquiries should be directed to the undersigned at (571) 272-3208.

This application is being referred to Technology Center AU 1616 for processing of the request for continued examination under 37 CFR 1.114 and for consideration of the concurrently filed amendment.

/Karen Creasy/
Karen Creasy
Petitions Examiner
Office of Petitions

---

[1] *The request to apply the issue fee to the new Notice may be satisfied by completing and returning the new Part B – Fee(s) Transmittal Form (along with any balance due at the time of submission). Petitioner is advised that the Issue Fee Transmittal Form must be completed and timely submitted to avoid abandonment of the application.*

UNITED STATES PATENT AND TRADEMARK OFFICE

Commissioner for Patents
United States Patent and Trademark Office
P.O. Box 1450
Alexandria, VA 22313-1450
www.uspto.gov

Thomas Drennan Selgas
c/o CARR LLP
670 Founders Square
900 Jackson Street
Dallas TX 75202

MAILED
FEB 01 2011
OFFICE OF PETITIONS

| | | |
|---|---|---|
| In re Application of | : | |
| Selgas et al. | : | |
| Application No. 10/417,862 | : | LETTER REGARDING |
| Filed: April 16, 2003 | : | PATENT TERM ADJUSTMENT |
| Atty Docket No. MMAIL 1532007 | : | |

This letter is in response to the "APPLICATION FOR CORRECTION OF ERRONEOUS PATENT TERM ADJUSTMENT," filed September 17, 2010. Applicants request that the calculation be corrected to show 442 days of PTO delay and 875 days of Applicant delay. Applicants assert the final PTA for the issued patent will be 582 days. Applicants request this correction partly on the basis that the Office will take in excess of three years to issue this patent.

To the extent that applicants request reconsideration of the patent term adjustment as it relates to the Office's failure to issue the patent within 3 years of the filing date, the application for patent term adjustment under 37 CFR 1.705(b) is **DISMISSED as PREMATURE**.

Knowledge of the actual date the patent issues is required to calculate the amount, if any, of additional patent term patentees are entitled to for Office failure to issue the patent within 3 years. See § 1.702(b). This is true even in this instance where a request for continued examination (RCE) was filed. The computer will not undertake the § 1.702(b) calculation until the actual date of issuance of the patent has been determined. Likewise, the computer will not calculate any further Office delay under § 1.702(a)(4) or applicant delay under § 1.704(c)(10) until the actual date of issuance of the patent has been determined. As such, the Office cannot make a determination on the correctness of the patent term adjustment until the patent has issued. Requesting reconsideration of the patent term adjustment to be indicated on the patent under 37

CFR 1.705(b) based on the initial determination of patent term adjustment and a projected issuance date of the patent or even the filing date of the request for continued examination is premature. Accordingly, it is appropriate to dismiss as premature such a request.

Rather than file an application for patent term adjustment under 37 CFR 1.705(b) contesting the 37 CFR 1.702(b) calculation at the time of the mailing of the notice of allowance, applicants are advised that they may wait until the time of the issuance of the patent and file a request for reconsideration of the patent term adjustment pursuant to 37 CFR 1.705(d). As the USPTO does not calculate the amount of time earned pursuant to 37 CFR 1.702(b) until the time of the issuance of the patent, the Office will consider any request for reconsideration of the patent term adjustment due to an error in the calculation of 37 CFR 1.702(b) to be timely if the request for reconsideration is filed within two months of the issuance of the patent. However, as to all other bases for contesting the initial determination of patent term adjustment received with the notice of allowance, applicants must timely file an application for patent term adjustment prior to the payment of the issue fee[1].

The request for correction of the initial determination of patent term adjustment (PTA) is **GRANTED to the extent indicated below.**

The Office has updated the PALM screen to reflect that the correct Patent Term Adjustment determination at the time of the mailing of the Notice of Allowance is zero (0) days, with Office delay remaining 151 days and Applicant delay being one thousand one hundred ninety-five (1195) days. A copy of the updated PAIR screen, showing the corrected determination, is enclosed.

On August 17, 2010, the Office mailed the Determination of Patent Term Adjustment under 35 U.S.C. 154(b) in the above-

---

[1] For example, if an applicant disputes both the calculation of patent term adjustment under 37 CFR 1.702(a)(1) for Office failure to mail a first Office action or notice of allowance not later than fourteen months after the date on which the application was filed and under 37 CFR 1.702(b) for Office failure to issue a patent within three years of the actual filing date of the application, then applicant must still timely file an application for patent term adjustment prior to the payment of the issue fee to contest the calculation of Office delay in issuing a first Office action or notice of allowance. See 37 CFR 1.705(b) and 35 U.S.C. 154(b)(3)(B). A dispute as to the calculation of the §1.702(a)(1) period raised on request for reconsideration of patent term adjustment under 37 CFR 1.705(d) will be dismissed as untimely filed.

identified application. The Notice stated that the patent term adjustment to date is zero days. Applicants state that they believe the patent term adjustment is incorrect because it fails to include several instances of Applicants submitting supplemental replies, and it fails to properly calculate the delays that stemmed from a response to an August 23, 2006 non-final Office action.

The Office concurs with Applicants that the Office failed to enter a 62 day delay for a supplemental amendment, filed on July 31, 2006. Pursuant to 37 CFR 1.704(c)(8), the period is calculated counting the number of days beginning on the day after the date the initial reply to the non-final Office action was filed, May 31, 2006, and ending on the date that the supplemental amendment was filed, July 31, 2006. Accordingly, a period of reduction of 62 days will be entered.

The Office concurs with Applicants that the Office failed to enter 145 cumulative days of delay under 37 CFR 1.704(c)(8) in connection with an IDS filed on March 5, 2010, a supplemental response filed on June 11, 2010, a IDS filed on July 7, 2010, and an IDS filed on July 21, 2010. The record does not support a conclusion that the examiner expressly requested the filing of the supplemental response or the IDSs. Further, a review of the IDSs reveals that applicants did not include a statement under 37 CFR 1.704(d).[2] Thus, applicants failed to engage in reasonable efforts to conclude prosecution of the application. The period of adjustment should have been reduced by 145 days pursuant to 37 CFR 1.704(c)(8), counting the number of days beginning on the day after the date the initial reply was filed, February 27, 2010, and ending on the date that the last IDS in the chain of supplemental replies was filed, July 21, 2010. Accordingly, a period of reduction of 145 days will be entered.

---

[2] Pursuant to 37 CFR § 1.704(d):

> A paper containing only an information disclosure statement in compliance with §§ 1.97 and 1.98 will not be considered a failure to engage in reasonable efforts to conclude prosecution (processing or examination) of the application under paragraphs (c)(6), (c)(8), (c)(9), or (c)(10) of this section if it is accompanied by a statement that each item of information contained in the information disclosure statement was first cited in any communication from a foreign patent office in a counterpart application and that this communication was not received by any individual designated in § 1.56(c) more than thirty days prior to the filing of the information disclosure statement. This thirty-day period is not extendable.

Turning to the delays surrounding the abandonment of the application following a late response to the August 21, 2006 non-final Office action:

Pursuant to 37 CFR 1.704(c)(3), a period of reduction of 334 days should have been entered. 37 CFR 1.704(c)(3) provides in pertinent part that:

> (c) Circumstances that constitute a failure of the applicant to engage in reasonable efforts to conclude processing or examination of an application also include the following circumstances, which will result in the following reduction of the period of adjustment set forth in § 1.703 to the extent that the periods are not overlapping:
>
> ...
>
> ...
>
> > (3) Abandonment of the application or late payment of the issue fee, in which case the period of adjustment set forth in §1.703 shall be reduced by the number of days, if any, beginning on the date of abandonment or the date after the date the issue fee was due and ending on the earlier of:
> >
> > > (i) The date of mailing of the decision reviving the application or accepting late payment of the issue fee; or
> > >
> > > (ii) The date that is four months after the date the grantable petition to revive the application or accept late payment of the issue fee was filed.

In this instance, the application became abandoned on November 25, 2006 (November 23, 2006 being a Federal Holiday) for failure to respond to the non-final Office action, mailed August 23, 2006, which set an extendable three month period for reply. On June 25, 2007 applicants filed a grantable petition to revive under the unintentional delay standard of 37 CFR 1.137(b). This petition was not granted until December 27, 2007, which is longer than four months. Accordingly, a period of reduction of 333 days is being entered, for the period beginning on November 25, 2006, the date of abandonment, and ending on October 23, 2007, the date applicants' grantable petition was filed + four months).

Applicants filed an amendment on June 25, 2007 as their reply component of the petition to revive. The examiner of record deemed this reply not fully responsive because the reply failed to include a complete or accurate record of the substance of the December 6, 2006 interview. Accordingly, a Notice of Non-Compliant Amendment was mailed on August 11, 2008, affording applicants a one month/30 day period for reply. On September 10, 2008, applicants filed a copy of the June 25, 2007 and additional remarks that cleared up possibly misleading statements in the June 25, 2007 submission.

While applicants requested withdrawal of the August 11, 2008 Notice of Non-Compliant Amendment, it was never vacated. Office policy is that only T.C. Directors may vacate Office actions. As such, the August 11, 2008 Notice of Non-Compliant Amendment stands and the September 10, 2008 response is viewed as a response correcting an omission in a previous reply. Under 37 CFR 1.704(c)(7), the period of reduction is 323 days, beginning June 26, 2007 and ending September 10, 2008 (443 days), minus the period from June 26, 2007 to October 23, 2007 (120 days), which was covered in the reduction for the period of abandonment. The period of reduction of 443 days is being removed and a period of reduction of 323 days is being entered in connection with the reply correcting an omission.

Since the June 25, 2007 response was incomplete and not corrected until September 10, 2008, the Office's mailing of a non-final Office action on December 11, 2008 was timely mailed within four months of September 10, 2008. No additional adjustment under 37 CFR 1.702(a)(2) is required.

In view thereof, the determination of Patent Term Adjustment at the time of the mailing of the notice of allowance remains zero (0) days. However, Office records have been updated to reflect the changes in PTA. Office delay remains 151 (26 + 73 + 52) days. Applicant delay is 1195 (94 + 91 + 62 + 333 + 323 + 51 + 92 + 4 + 145) days.

The Office acknowledges receipt of the required $200.00 fee under 37 CFR 1.18(e).

The Office of Data Management has been advised of this decision. The application is, thereby, forwarded to the Office of Data Management for issuance of the application. The patent term adjustment indicated on the patent (as shown on the Issue Notification mailed about three weeks prior to patent issuance)

will include any additional adjustment accrued both for Office delay in issuing the patent more than four months after payment of the issue fee and satisfaction of all outstanding requirements, and for the Office taking in excess of three years to issue the patent (to the extent that the three-year period does not overlap with periods already accorded).

Telephone inquiries specific to this matter should be directed to the undersigned at (571) 272-3230.

Shirene Willis Brantley

Shirene Willis Brantley
Senior Petitions Attorney
Office of Petitions

Enclosure: Copy of adjusted PAIR screen for Application No. 10/417,862

Patent eBusiness

- Electronic Filing
- Patent Application Information (PAIR)
- Patent Ownership
- Fees
- Supplemental Resources & Support

Patent Information

Patent Guidance and General Info
- Codes, Rules & Manuals
- Employee & Office Directories
- Resources & Public Notices

Patent Searches

Patent Official Gazette
- Search Patents & Applications
- Search Biological Sequences
- Copies, Products & Services

Other

Copyrights
Trademarks
Policy & Law
Reports

Patent Application Information Retrieval

Order Certified Application As Filed | Order Certified File Wrapper | View Order List

10/417,862 METHOD FOR PROVIDING A NETWORK ADDRESS

Select New Case | Application Data | Transaction History | Image File Wrapper | Patent Term Adjustments | Continuity Data | Published Documents | Address & Attorney/Agent

## Patent Term Adjustment

| | | | |
|---|---|---|---|
| Filing or 371(c) Date: | 04-16-2003 | Overlapping Days Between {A and B} or {A and C}: | 0 |
| Issue Date of Patent: | - | Non-Overlapping USPTO Delays: | 151 |
| A Delays: | 151 | PTO Manual Adjustments: | -420 |
| B Delays: | 0 | Applicant Delays: | 775 |
| C Delays: | 0 | Total PTA Adjustments: | 0 |

**Patent Term Adjustment History** **Explanation Of Calculations**

| Number | Date | Contents Description | PTO (Days) | APPL (Days) | Start |
|---|---|---|---|---|---|
| 168 | 01-30-2011 | Adjustment of PTA Calculation by PTO | | 420 | 0 |
| 126 | 08-17-2010 | Mail Notice of Allowance | 52 | | 97 |
| 125 | 08-16-2010 | Document Verification | | | 0 |
| 124 | 08-16-2010 | Issue Revision Completed | | | 0 |
| 123 | 08-16-2010 | Notice of Allowance Data Verification Completed | | | 0 |
| 122 | 08-16-2010 | Notice of Allowability | | | 0 |
| 121 | 07-21-2010 | Information Disclosure Statement considered | | | 0 |
| 120 | 03-05-2010 | Information Disclosure Statement considered | | | 0 |
| 119 | 02-24-2010 | Information Disclosure Statement considered | | | 0 |
| 118 | 08-02-2010 | Miscellaneous Incoming Letter | | | 0 |
| 117 | 07-21-2010 | Miscellaneous Incoming Letter | | | 0 |
| 116 | 07-21-2010 | Miscellaneous Incoming Letter | | | 0 |
| 115 | 07-21-2010 | Reference capture on IDS | | | 0 |
| 114 | 07-21-2010 | Information Disclosure Statement (IDS) Filed | | | 0 |
| 113 | 07-21-2010 | Information Disclosure Statement (IDS) Filed | | | 0 |
| 112 | 07-07-2010 | Reference capture on IDS | | | 0 |
| 111 | 07-07-2010 | Information Disclosure Statement (IDS) Filed | | | 0 |
| 110 | 06-14-2010 | Date Forwarded to Examiner | | | 0 |
| 109 | 06-11-2010 | Supplemental Response | | | 0 |
| 108 | 06-14-2010 | Mail-Petition Decision - Dismissed | | | 0 |

| | | | | |
|---|---|---|---|---|
| 107 | 06-14-2010 | Petition Decision - Dismissed | | 0 |
| 106 | 02-26-2010 | Petition Entered | | 0 |
| 105 | 05-24-2010 | Miscellaneous Incoming Letter | | 0 |
| 104 | 05-21-2010 | Miscellaneous Incoming Letter | | 0 |
| 103 | 05-24-2010 | Miscellaneous Incoming Letter | | 0 |
| 102 | 05-05-2010 | Miscellaneous Incoming Letter | | 0 |
| 101 | 04-23-2010 | Mail Examiner Interview Summary (PTOL - 413) | | 0 |
| 100 | 04-19-2010 | Examiner Interview Summary Record (PTOL - 413) | | 0 |
| 99 | 03-15-2010 | Miscellaneous Incoming Letter | | 0 |
| 98 | 03-31-2010 | Date Forwarded to Examiner | | 0 |
| 97 | 02-26-2010 | Response after Non-Final Action | | 0 |
| 96 | 03-05-2010 | Reference capture on IDS | | 0 |
| 95 | 02-24-2010 | Information Disclosure Statement (IDS) Filed | | 0 |
| 94 | 03-05-2010 | Information Disclosure Statement (IDS) Filed | | 0 |
| 93 | 02-24-2010 | Information Disclosure Statement (IDS) Filed | | 0 |
| 92 | 02-03-2010 | Mail Non-Final Rejection | | 0 |
| 91 | 02-01-2010 | Non-Final Rejection | | 0 |
| 90 | 11-17-2009 | Date Forwarded to Examiner | | 0 |
| 89 | 11-13-2009 | Amendment Submitted/Entered with Filing of CPA/RCE | | 0 |
| 88 | 11-17-2009 | Date Forwarded to Examiner | | 0 |
| 87 | 11-13-2009 | Request for Continued Examination (RCE) | | 0 |
| 86 | 11-17-2009 | Disposal for a RCE / CPA / R129 | | 0 |
| 85 | 11-13-2009 | Workflow - Request for RCE - Begin | | 0 |
| 84 | 10-05-2009 | Mail Final Rejection (PTOL - 326) | | 0 |
| 83 | 10-01-2009 | Final Rejection | | 0 |
| 82 | 06-15-2009 | Information Disclosure Statement considered | | 0 |
| 81 | 09-11-2009 | Correspondence Address Change | | 0 |
| 80 | 06-15-2009 | Information Disclosure Statement (IDS) Filed | 4 | 78 |
| 79 | 07-13-2009 | Date Forwarded to Examiner | | 0 |
| 78 | 06-11-2009 | Response after Non-Final Action | 92 | 71 |
| 77 | 06-11-2009 | Request for Extension of Time - Granted | | 0 |

| | | | | |
|---|---|---|---|---|
| 76 | 06-15-2009 | Information Disclosure Statement (IDS) Filed | | 0 |
| 75 | 10-31-2008 | Reference capture on IDS | | 0 |
| 74 | 10-31-2008 | Information Disclosure Statement (IDS) Filed | 51 | 63 |
| 73 | 10-27-2008 | Reference capture on IDS | | 0 |
| 72 | 10-27-2008 | Information Disclosure Statement (IDS) Filed | | 0 |
| 71 | 12-11-2008 | Mail Non-Final Rejection | | 0 |
| 70 | 12-08-2008 | Non-Final Rejection | | 0 |
| 69 | 10-31-2008 | Information Disclosure Statement considered | | 0 |
| 68 | 10-27-2008 | Information Disclosure Statement considered | | 0 |
| 67 | 10-31-2008 | Information Disclosure Statement (IDS) Filed | | 0 |
| 66 | 10-27-2008 | Information Disclosure Statement (IDS) Filed | | 0 |
| 65 | 10-06-2008 | Case Docketed to Examiner in GAU | | 0 |
| 64 | 09-23-2008 | Date Forwarded to Examiner | | 0 |
| 63 | 09-10-2008 | Response after Non-Final Action | 443 | 57 |
| 62 | 09-09-2008 | Mail Examiner Interview Summary (PTOL - 413) | | 0 |
| 61 | 09-05-2008 | Examiner Interview Summary Record (PTOL - 413) | | 0 |
| 60 | 08-11-2008 | Mail Notice of Informal or Non-Responsive Amendment | | 0 |
| 59 | 06-25-2007 | Information Disclosure Statement considered | | 0 |
| 58 | 06-02-2008 | Date Forwarded to Examiner | | 0 |
| 57.1 | 06-25-2007 | Informal or Non-Responsive Amendment after Examiner Action | | 0 |
| 57 | 06-25-2007 | Response after Non-Final Action | | 0 |
| 56 | 06-02-2008 | Mail Notice of Rescinded Abandonment | | 0 |
| 55 | 06-02-2008 | Notice of Rescinded Abandonment in TCs | | 0 |
| 54 | 12-27-2007 | Mail-Petition to Revive Application - Granted | | 0 |
| 53 | 12-27-2007 | Petition to Revive Application - Granted | | 0 |
| 52 | 06-25-2007 | Petition Entered | | 0 |
| 51 | 10-31-2007 | Mail Examiner Interview Summary (PTOL - 413) | | 0 |
| 50 | 10-31-2007 | Mail Abandonment for Failure to Respond to Office Action | | 0 |
| 49 | 10-29-2007 | Aband. for Failure to Respond to O. A. | | 0 |
| 44 | 06-25-2007 | Reference capture on IDS | | 0 |
| 43 | 06-25-2007 | Information Disclosure Statement (IDS) Filed | | 0 |

| | | | | | |
|---|---|---|---|---|---|
| 42 | 06-25-2007 | Information Disclosure Statement (IDS) Filed | | | 0 |
| 40 | 05-03-2007 | Statement Filed Indicating a Loss of Entitlement to Small Entity Status | | | 0 |
| 39 | 12-06-2006 | Examiner Interview Summary Record (PTOL - 413) | | | 0 |
| 38 | 08-23-2006 | Mail Examiner Interview Summary (PTOL - 413) | | | 0 |
| 37 | 08-23-2006 | Mail Non-Final Rejection | | | 0 |
| 36 | 08-21-2006 | Non-Final Rejection | | | 0 |
| 35 | 08-17-2006 | Examiner Interview Summary Record (PTOL - 413) | | | 0 |
| 34 | 06-07-2006 | Date Forwarded to Examiner | | | 0 |
| 33 | 05-30-2006 | Response after Non-Final Action | | 91 | 31 |
| 32 | 05-30-2006 | Request for Extension of Time - Granted | | | 0 |
| 31 | 11-29-2005 | Mail Non-Final Rejection | | | 0 |
| 30 | 11-26-2005 | Non-Final Rejection | | | 0 |
| 29 | 10-13-2005 | Case Docketed to Examiner in GAU | | | 0 |
| 28 | 09-22-2005 | Date Forwarded to Examiner | | | 0 |
| 27 | 09-12-2005 | Response to Election / Restriction Filed | | | 0 |
| 26 | 09-12-2005 | Request for Extension of Time - Granted | | | 0 |
| 25 | 07-26-2005 | Mail Notification of Terminal Disclaimer - Accepted | | | 0 |
| 24 | 07-26-2005 | Mail Restriction Requirement | 73 | | 18 |
| 23 | 07-25-2005 | Requirement for Restriction / Election | | | 0 |
| 22 | 05-25-2005 | Paralegal TD Accepted | | | 0 |
| 21 | 05-25-2005 | Notification of Terminal Disclaimer - Accepted | | | 0 |
| 20 | 01-14-2005 | Terminal Disclaimer Filed | | 0 | 18 |
| 19 | 05-24-2005 | Date Forwarded to Examiner | | | 0 |
| 18 | 01-14-2005 | Response after Non-Final Action | | 94 | 10 |
| 17 | 01-14-2005 | Request for Extension of Time - Granted | | | 0 |
| 16 | 04-11-2005 | Mail-Petition Decision - Dismissed | | | 0 |
| 15 | 01-14-2005 | Petition Entered | | | 0 |
| 14 | 01-14-2005 | Workflow incoming petition IFW | | | 0 |
| 13 | 10-13-2004 | Mail Examiner Interview Summary (PTOL - 413) | | | 0 |
| 12 | 10-04-2004 | Examiner Interview Summary Record (PTOL - 413) | | | 0 |
| 11 | 07-16-2004 | Case Docketed to Examiner in GAU | | | 0 |

| | | | | |
|---|---|---|---|---|
| 10 | 07-12-2004 | Mail Non-Final Rejection | 26 | -1 |
| 9 | 07-08-2004 | Non-Final Rejection | | 0 |
| 8 | 05-13-2004 | IFW TSS Processing by Tech Center Complete | | 0 |
| 7 | 05-03-2004 | Reference capture on IDS | | 0 |
| 6.7 | 05-03-2004 | Information Disclosure Statement (IDS) Filed | | 0 |
| 6 | 05-03-2004 | Information Disclosure Statement (IDS) Filed | | 0 |
| 5 | 08-19-2003 | Case Docketed to Examiner in GAU | | 0 |
| 4 | 07-24-2003 | Application Dispatched from OIPE | | 0 |
| 3 | 07-25-2003 | Application Is Now Complete | | 0 |
| 2 | 06-10-2003 | Cleared by OIPE CSR | | 0 |
| 1 | 04-16-2003 | Initial Exam Team nn | | 0 |

*If you need help:*

- *Call the Patent Electronic Business Center at (866) 217-9197 (toll free) or e-mail EBC@uspto.gov for specific questions about Patent Application Information Retrieval (PAIR).*
- *Send general questions about USPTO programs to the USPTO Contact Center (UCC).*
- *If you experience technical difficulties or problems with this application, please report them via e-mail to Electronic Business Support or call 1 800-786-9199.*

You can suggest USPTO webpages or material you would like featured on this section by E-mail to the webmaster@uspto.gov. While we cannot promise to accommodate all requests, your suggestions will be considered and may lead to other improvements on the website.

UNITED STATES PATENT AND TRADEMARK OFFICE

Commissioner for Patents
United States Patent and Trademark Office
P.O. Box 1450
Alexandria, VA 22313-1450
www.uspto.gov

Thomas Drennan Selgas
c/o CARR LLP
670 Founders Square
900 Jackson Street
Dallas TX 75202

**MAILED**
**AUG 23 2011**
**OFFICE OF PETITIONS**

| | | |
|---|---|---|
| In re Patent No. 7,975,056 | : | |
| Issue Date: July 5, 2011 | : | |
| Application No. 10/417,862 | : | DECISION ON PETITION |
| Filed: April 16, 2003 | : | |
| Attorney Docket No. MMAIL 1532007 | : | |

This is a decision on the Request For Certificate Of Correction Of Patent (37 C.F.R. 1.323), filed July 13, 2011, which is being treated as a Petition Under 37 CFR §3.81(b), to identify the correct assignee's address. A completed Certificate of Correction Form (PTO/SB/44) was submitted with Petition.

The petition under 37 CFR §3.81(b) is **GRANTED**.

Petitioner urges that the present Petition was submitted to correct the assignee's address on the previously submitted PTOL 85B and such error was typographical error. Accordingly, petitioner requests, in effect, that the Title Page of the above-identified patent be corrected, via issuance of Certificate of Correction, to correct the assignee's address identified thereon from:

"MyMail Ltd., **Denton, (TX)**"

to:

--MyMail Ltd., **Athens, (TX)**--

37 CFR 3.81(b), effective June 25, 2004, reads:

> *After payment of the issue fee:* Any request for issuance of an application in the name of the assignee submitted after the date of payment of the issue fee, and any request for a patent to be corrected to state the name of the assignee, must state that the assignment was submitted for recordation as set forth in §3.11 before issuance of the patent, and must include a request for a certificate of correction under §1.323 of this chapter (accompanied by the fee set forth in §1.20(a) and the processing fee set forth in §1.17(i) of this chapter.

The requisite $100.00 fee (Fee Code 1811), as set forth under 37 CFR 1.20(a), and the requisite $130.00 petition fee (Fee Code 1464), as set forth under 37 CFR 1.17(i) have been submitted. Further, Office assignment records are consistent with the requested correction. Accordingly, since the Petition complies with the provisions of 37 CFR 3.81(b), it is appropriate for the Office to issue a Certificate of Correction in accordance with the content of the Form (PTO/SB/44) submitted with the Petition.

Inquiries related this communication should be directed to the undersigned at (571)272-3213.

Any questions concerning the issuance of a Certificate of Correction should be directed to the Certificates of Correction Branch at (571) 272-4200.

This matter is being referred to the Certificates of Correction Branch for processing of a Certificate of Correction in U.S. Patent No. 7,975,056.

Cheryl Gibson Baylor

Cheryl Gibson-Baylor
Petitions Examiner
Office of Petitions

UNITED STATES PATENT AND TRADEMARK OFFICE

Commissioner for Patents
United States Patent and Trademark Office
P.O. Box 1450
Alexandria, VA 22313-1450
www.uspto.gov

Paper No.

SWANSON & BRATSCHUN, L.L.C.
8210 SOUTHPARK TERRACE
LITTLETON CO 80120

**MAILED**

MAR 29 2011

**OFFICE OF PETITIONS**

| | | |
|---|---|---|
| In re Patent No. 7,522,762 | : | DECISION ON REQUEST |
| Rea et al. | : | FOR |
| Issue Date: April 21, 2009 | : | RECONSIDERATION OF |
| Application No. 10/417,883 | : | PATENT TERM ADJUSTMENT |
| Filed: April 16, 2003 | : | and |
| Attorney Docket No. 0225.4001 | : | NOTICE OF INTENT TO ISSUE |
| | : | CERTIFICATE OF CORRECTION |

This is a decision on the petition filed on June 19, 2009, which is being treated as a petition under 37 CFR 1.705(d) requesting that the patent term adjustment indicated on the above-identified patent be corrected to indicate that the term of the above-identified patent is extended or adjusted by one thousand one hundred eighteen (1118) days.

The petition to correct the patent term adjustment indicated on the above-identified patent is **GRANTED to the extent indicated herein.** The patent term adjustment is corrected to indicate that the term of the above-identified patent is extended or adjusted by **one thousand one hundred fourteen (1114)** days.

Receipt of the $200.00 fee set forth in 37 CFR 1.18(e) on February 17, 2009. No additional fees are required.

As the period from the filing date of the request for continued examination (RCE) to the issue date of the patent is not included in the "B" delay period, the over three year period begins on April 17, 2006 and ends on January 3, 2008, the day

before the first RCE was filed, which amounts to 627 (not 628) days for "B" delay. See U.S.C. 154(b)(1)(B)(i).

In addition, patentee's calculation does not take into account the applicant delay properly entered pursuant to 37 CFR 1.704(b) for applicant taking until February 17, 2009 to pay the issue fee in reply to the Notice of Allowance mailed November 14, 2008. Applicant took in excess of three months to file a reply and thus, entry of the period of reduction of 3 days is proper. (The issue fee payment was timely filed as February 14 was a Saturday and February 16, 2009 was a federal holiday).

The Office will *sua sponte* issue a certificate of correction. Pursuant to 37 CFR 1.322, the Office will not issue a certificate of correction without first providing assignee or patentee an opportunity to be heard. Accordingly, patentees are given **one (1) month or thirty (30) days**, whichever is longer, from the mail date of this decision to respond. No extensions of time will be granted under § 1.136.

Nothing in this decision shall be construed as a waiver of the requirement of 35 U.S.C. 154(b)(4) that any civil action by an applicant dissatisfied with a determination made by the Director under 35 U.S.C. 154(b)(3) be filed in the United States District Court for the District of Columbia within 180 days after the grant of the patent.

The application is being forwarded to the Certificates of Branch for issuance of a certificate of correction. The Office will issue a certificate of correction indicating that the term of the above-identified patent is extended or adjusted by **one thousand one hundred fourteen (1114) days**.

Telephone inquiries specific to this matter should be directed to the undersigned at (571) 272-3219.

Nancy Johnson
Senior Petitions Attorney
Office of Petitions

Enclosure: Copy of DRAFT Certificate of Correction

UNITED STATES PATENT AND TRADEMARK OFFICE

# CERTIFICATE OF CORRECTION

PATENT : 7,522,762 B2

DATED : **April 21, 2009** **DRAFT**

INVENTOR(S) : Rea et al.

It is certified that error appears in the above-identified patent and that said Letters Patent is hereby corrected as shown below:

On the cover page,

[*] Notice: Subject to any disclaimer, the term of this patent is extended or adjusted under 35 USC 154(b) by 487 days

Delete the phrase "by 487 days" and insert – by 1114 days--

PTO/SB/66 (03-09)
Approved for use through 03/31/2012. OMB 0651-0016
U.S. Patent and Trademark Office: U.S. DEPARTMENT OF COMMERCE
Under the Paperwork Reduction Act of 1995, no persons are required to respond to a collection of information unless it displays valid OMB control number.

# PETITION TO ACCEPT UNINTENTIONALLY DELAYED PAYMENT OF MAINTENANCE FEE IN AN EXPIRED PATENT (37 CFR 1.378(c))

| Patent Number | Issue Date (YYYY-MM-DD) | Application Number | Filing Date (YYYY-MM-DD) | Docket Number (if applicable) |
|---|---|---|---|---|
| 7,042,451 | 2006-05-09 | 10/418,304 | 2003-04-18 | P07449US01 |

CAUTION: Maintenance fee (and surcharge, if any) payment must correctly identify: (1) the patent number and (2) the application number of the actual U.S. application leading to issuance of that patent to ensure the fee(s) is/are associated with the correct patent. 37 CFR 1.366(c) and (d).

SMALL ENTITY
☐ Patentee claims, or has previously claimed, small entity status. See 37 CFR 1.27.

LOSS OF ENTITLEMENT TO SMALL ENTITY STATUS
☐ Patentee is no longer entitled to small entity status. See 37 CFR 1.27(g)

| NOT Small Entity | | | Small Entity | | |
|---|---|---|---|---|---|
| | Fee | Code | | Fee | Code |
| ◉ | 3 ½ year | (1551) | ◯ | 3 ½ year | (2551) |
| ◯ | 7 ½ year | (1552) | ◯ | 7 ½ year | (2552) |
| ◯ | 11 ½ year | (1553) | ◯ | 11 ½ year | (2553) |

SURCHARGE
The surcharge required by 37 CFR 1.20(i)(2) (Fee Code 1558) must be paid as a condition of accepting unintentionally delayed payment of the maintenance fee.

MAINTENANCE FEE (37 CFR 1.20(e)-(g))
The appropriate maintenance fee must be submitted with this petition.

STATEMENT
THE UNDERSIGNED CERTIFIES THAT THE DELAY IN PAYMENT OF THE MAINTENANCE FEE TO THIS PATENT WAS UNINTENTIONAL

PETITIONER(S) REQUEST THAT THE DELAYED PAYMENT OF THE MAINTENANCE FEE BE ACCEPTED AND THE PATENT REINSTATED

THIS PORTION MUST BE COMPLETED BY THE SIGNATORY OR SIGNATORIES

37 CFR 1.378(d) states: "Any petition under this section must be signed by an attorney or agent registered to practice before the Patent and Trademark Office, or by the patentee, the assignee, or other party in interest."

I certify, in accordance with 37 CFR 1.4(d)(4) that I am

◉ An attorney or agent registered to practice before the Patent and Trademark Office

◯ A sole patentee

◯ A joint patentee; I certify that I am authorized to sign this submission on behalf of all the other patentees.

◯ A joint patentee; all of whom are signing this e-petition

◯ The assignee of record of the entire interest

Under the Paperwork Reduction Act of 1995, no persons are required to respond to a collection of information unless it displays valid OMB control number.

| Patent Practitioner | | | |
|---|---|---|---|
| A signature of the applicant or representative is required in accordance with 37 CFR 1.33 and 10.18. Please see 37 CFR 1.4(d) for the form of the signature | | | |
| Signature | /Douglas E. Jackson/ | Date (YYYY-MM-DD) | 2011-02-03 |
| Name | Douglas E. Jackson | Registration Number | 28518 |

This collection of information is required by 37 CFR 1.378(c). The information is required to obtain or retain a benefit by the public which is to file (and by the USPTO to process) an application. Confidentiality is governed by 35 U.S.C. 122 and 37 CFR 1.11 and 1.14. This collection is estimated to take 1 hour to complete, including gathering, preparing, and submitting the completed application form to the USPTO. Time will vary depending upon the individual case. Any comments on the amount of time you require to complete this form and/ or suggestions for reducing this burden, should be sent to the Chief Information Officer, U.S. Patent and Trademark Office, U.S. Department of Commerce, P.O. Box 1450, Alexandria, VA 22313-1450. DO NOT SEND FEES OR COMPLETED FORMS TO THIS ADDRESS. **This form can only be used when in conjunction with EFS-Web. If this form is mailed to the USPTO, it may cause delays in reinstating the patent.**

# Privacy Act Statement

The Privacy Act of 1974 (P.L. 93-579) requires that you be given certain information in connection with your submission of the attached form related to a patent application or patent. Accordingly, pursuant to the requirements of the Act, please be advised that: (1) the general authority for the collection of this information is 35 U.S.C. 2(b)(2); (2) furnishing of the information solicited is voluntary; and (3) the principal purpose for which the information is used by the U.S. Patent and Trademark Office is to process and/or examine your submission related to a patent application or patent. If you do not furnish the requested information, the U.S. Patent and Trademark Office may not be able to process and/or examine your submission, which may result in termination of proceedings or abandonment of the application or expiration of the patent.

The information provided by you in this form will be subject to the following routine uses:

1. The information on this form will be treated confidentially to the extent allowed under the Freedom of Information Act (5 U.S.C. 552) and the Privacy Act (5 U.S.C. 552a). Records from this system of records may be disclosed to the Department of Justice to determine whether the Freedom of Information Act requires disclosure of these records.

2. A record from this system of records may be disclosed, as a routine use, in the course of presenting evidence to a court, magistrate, or administrative tribunal, including disclosures to opposing counsel in the course of settlement negotiations.

3. A record in this system of records may be disclosed, as a routine use, to a Member of Congress submitting a request involving an individual, to whom the record pertains, when the individual has requested assistance from the Member with respect to the subject matter of the record.

4. A record in this system of records may be disclosed, as a routine use, to a contractor of the Agency having need for the information in order to perform a contract. Recipients of information shall be required to comply with the requirements of the Privacy Act of 1974, as amended, pursuant to 5 U.S.C. 552a(m).

5. A record related to an International Application filed under the Patent Cooperation Treaty in this system of records may be disclosed, as a routine use, to the International Bureau of the World Intellectual Property Organization, pursuant to the Patent Cooperation Treaty.

6. A record in this system of records may be disclosed, as a routine use, to another federal agency for purposes of National Security review (35 U.S.C. 181) and for review pursuant to the Atomic Energy Act (42 U.S.C. 218(c)).

7. A record from this system of records may be disclosed, as a routine use, to the Administrator, General Services, or his/her designee, during an inspection of records conducted by GSA as part of that agency's responsibility to recommend improvements in records management practices and programs, under authority of 44 U.S.C. 2904 and 2906. Such disclosure shall be made in accordance with the GSA regulations governing inspection of records for this purpose, and any other relevant (i.e., GSA or Commerce) directive. Such disclosure shall not be used to make determinations about individuals.

8. A record from this system of records may be disclosed, as a routine use, to the public after either publication of the application pursuant to 35 U.S.C. 122(b) or issuance of a patent pursuant to 35 U.S.C. 151. Further, a record may be disclosed, subject to the limitations of 37 CFR 1.14, as a routine use, to the public if the record was filed in an application which became abandoned or in which the proceedings were terminated and which application is referenced by either a published application, an application open to public inspections or an issued patent.

9. A record from this system of records may be disclosed, as a routine use, to a Federal, State, or local law enforcement agency, if the USPTO becomes aware of a violation or potential violation of law or regulation.

# UNITED STATES PATENT AND TRADEMARK OFFICE

Commissioner for Patents
United States Patent and Trademark Office
P.O. Box 1450
Alexandria, VA 22313-1450
www.uspto.gov

In re Patent No. 7042451
Issue Date: May 9,2006
Application No. 10418304
Filed: April 18,2003
Attorney Docket No. P07449US01/RFH

:
:DECISION GRANTING PETITION
:UNDER 37 CFR 1.378(c)
:

This is a decision on the electronic petition, filed February 3,2011 ,under 37 CFR 1.378(c) to accept the unintentionally delayed payment of the 3.5 year maintenance fee for the above-identified patent.

The petition is **GRANTED**.

The maintenance fee is accepted, and the above-identified patent reinstated as of February 3,2011 . This decision also constitutes notice that the fee has been accepted. An electronic copy of the petition and this decision has been created as an entry in the Image File Wrapper. Nevertheless, petitioner should print and retain an independent copy.

Telephone inquiries related to this electronic decision should be directed to the Electronic Business Center at 1-866-217-9197.

UNITED STATES PATENT AND TRADEMARK OFFICE

Commissioner for Patents
United States Patent and Trademark Office
P.O. Box 1450
Alexandria, VA 22313-1450
www.uspto.gov

In re Patent No. 7179266
Issue Date: February 20,2007
Application No. 10418572
Filed: April 17,2003
Attorney Docket No. 2703/44

:
:DECISION GRANTING PETITION
:UNDER 37 CFR 1.378(c)
:

This is a decision on the electronic petition, filed March 29,2011 ,under 37 CFR 1.378(c) to accept the unintentionally delayed payment of the 3.5 year maintenance fee for the above-identified patent.

The petition is **GRANTED**.

The maintenance fee is accepted, and the above-identified patent reinstated as of March 29,2011 .
This decision also constitutes notice that the fee has been accepted. An electronic copy of the petition and this decision has been created as an entry in the Image File Wrapper. Nevertheless, petitioner should print and retain an independent copy.

Telephone inquiries related to this electronic decision should be directed to the Electronic Business Center at 1-866-217-9197.

PTO/SB/66 (03-09)
Approved for use through 03/31/2012. OMB 0651-0016
U.S. Patent and Trademark Office: U.S. DEPARTMENT OF COMMERCE
Under the Paperwork Reduction Act of 1995, no persons are required to respond to a collection of information unless it displays valid OMB control number.

# PETITION TO ACCEPT UNINTENTIONALLY DELAYED PAYMENT OF MAINTENANCE FEE IN AN EXPIRED PATENT (37 CFR 1.378(c))

| Patent Number | Issue Date (YYYY-MM-DD) | Application Number | Filing Date (YYYY-MM-DD) | Docket Number (if applicable) |
|---|---|---|---|---|
| 7179266 | 2007-02-20 | 10418572 | 2003-04-17 | 47563.0211 |

CAUTION: Maintenance fee (and surcharge, if any) payment must correctly identify: (1) the patent number and (2) the application number of the actual U.S. application leading to issuance of that patent to ensure the fee(s) is/are associated with the correct patent. 37 CFR 1.366(c) and (d).

SMALL ENTITY
☐ Patentee claims, or has previously claimed, small entity status. See 37 CFR 1.27.

LOSS OF ENTITLEMENT TO SMALL ENTITY STATUS
☒ Patentee is no longer entitled to small entity status. See 37 CFR 1.27(g)

| NOT Small Entity | | Small Entity | |
|---|---|---|---|
| Fee | Code | Fee | Code |
| ◉ 3 ½ year | (1551) | ◯ 3 ½ year | (2551) |
| ◯ 7 ½ year | (1552) | ◯ 7 ½ year | (2552) |
| ◯ 11 ½ year | (1553) | ◯ 11 ½ year | (2553) |

SURCHARGE
The surcharge required by 37 CFR 1.20(i)(2) (Fee Code 1558) must be paid as a condition of accepting unintentionally delayed payment of the maintenance fee.

MAINTENANCE FEE (37 CFR 1.20(e)-(g))
The appropriate maintenance fee must be submitted with this petition.

STATEMENT
THE UNDERSIGNED CERTIFIES THAT THE DELAY IN PAYMENT OF THE MAINTENANCE FEE TO THIS PATENT WAS UNINTENTIONAL

PETITIONER(S) REQUEST THAT THE DELAYED PAYMENT OF THE MAINTENANCE FEE BE ACCEPTED AND THE PATENT REINSTATED

THIS PORTION MUST BE COMPLETED BY THE SIGNATORY OR SIGNATORIES

37 CFR 1.378(d) states: "Any petition under this section must be signed by an attorney or agent registered to practice before the Patent and Trademark Office, or by the patentee, the assignee, or other party in interest."

I certify, in accordance with 37 CFR 1.4(d)(4) that I am

◉ An attorney or agent registered to practice before the Patent and Trademark Office

◯ A sole patentee

◯ A joint patentee; I certify that I am authorized to sign this submission on behalf of all the other patentees.

◯ A joint patentee; all of whom are signing this e-petition

◯ The assignee of record of the entire interest

Under the Paperwork Reduction Act of 1995, no persons are required to respond to a collection of information unless it displays valid OMB control number.

| Patent Practitioner | | | |
|---|---|---|---|
| A signature of the applicant or representative is required in accordance with 37 CFR 1.33 and 10.18. Please see 37 CFR 1.4(d) for the form of the signature | | | |
| Signature | /L. Grant Foster/ | Date (YYYY-MM-DD) | 2011-03-29 |
| Name | L. Grant Foster | Registration Number | 33236 |

This collection of information is required by 37 CFR 1.378(c). The information is required to obtain or retain a benefit by the public which is to file (and by the USPTO to process) an application. Confidentiality is governed by 35 U.S.C. 122 and 37 CFR 1.11 and 1.14. This collection is estimated to take 1 hour to complete, including gathering, preparing, and submitting the completed application form to the USPTO. Time will vary depending upon the individual case. Any comments on the amount of time you require to complete this form and/ or suggestions for reducing this burden, should be sent to the Chief Information Officer, U.S. Patent and Trademark Office, U.S. Department of Commerce, P.O. Box 1450, Alexandria, VA 22313-1450. DO NOT SEND FEES OR COMPLETED FORMS TO THIS ADDRESS. **This form can only be used when in conjunction with EFS-Web. If this form is mailed to the USPTO, it may cause delays in reinstating the patent.**

# Privacy Act Statement

The Privacy Act of 1974 (P.L. 93-579) requires that you be given certain information in connection with your submission of the attached form related to a patent application or patent. Accordingly, pursuant to the requirements of the Act, please be advised that: (1) the general authority for the collection of this information is 35 U.S.C. 2(b)(2); (2) furnishing of the information solicited is voluntary; and (3) the principal purpose for which the information is used by the U.S. Patent and Trademark Office is to process and/or examine your submission related to a patent application or patent. If you do not furnish the requested information, the U.S. Patent and Trademark Office may not be able to process and/or examine your submission, which may result in termination of proceedings or abandonment of the application or expiration of the patent.

The information provided by you in this form will be subject to the following routine uses:

1. The information on this form will be treated confidentially to the extent allowed under the Freedom of Information Act (5 U.S.C. 552) and the Privacy Act (5 U.S.C. 552a). Records from this system of records may be disclosed to the Department of Justice to determine whether the Freedom of Information Act requires disclosure of these records.

2. A record from this system of records may be disclosed, as a routine use, in the course of presenting evidence to a court, magistrate, or administrative tribunal, including disclosures to opposing counsel in the course of settlement negotiations.

3. A record in this system of records may be disclosed, as a routine use, to a Member of Congress submitting a request involving an individual, to whom the record pertains, when the individual has requested assistance from the Member with respect to the subject matter of the record.

4. A record in this system of records may be disclosed, as a routine use, to a contractor of the Agency having need for the information in order to perform a contract. Recipients of information shall be required to comply with the requirements of the Privacy Act of 1974, as amended, pursuant to 5 U.S.C. 552a(m).

5. A record related to an International Application filed under the Patent Cooperation Treaty in this system of records may be disclosed, as a routine use, to the International Bureau of the World Intellectual Property Organization, pursuant to the Patent Cooperation Treaty.

6. A record in this system of records may be disclosed, as a routine use, to another federal agency for purposes of National Security review (35 U.S.C. 181) and for review pursuant to the Atomic Energy Act (42 U.S.C. 218(c)).

7. A record from this system of records may be disclosed, as a routine use, to the Administrator, General Services, or his/her designee, during an inspection of records conducted by GSA as part of that agency's responsibility to recommend improvements in records management practices and programs, under authority of 44 U.S.C. 2904 and 2906. Such disclosure shall be made in accordance with the GSA regulations governing inspection of records for this purpose, and any other relevant (i.e., GSA or Commerce) directive. Such disclosure shall not be used to make determinations about individuals.

8. A record from this system of records may be disclosed, as a routine use, to the public after either publication of the application pursuant to 35 U.S.C. 122(b) or issuance of a patent pursuant to 35 U.S.C. 151. Further, a record may be disclosed, subject to the limitations of 37 CFR 1.14, as a routine use, to the public if the record was filed in an application which became abandoned or in which the proceedings were terminated and which application is referenced by either a published application, an application open to public inspections or an issued patent.

9. A record from this system of records may be disclosed, as a routine use, to a Federal, State, or local law enforcement agency, if the USPTO becomes aware of a violation or potential violation of law or regulation.

UNITED STATES PATENT AND TRADEMARK OFFICE

Commissioner for Patents
United States Patent and Trademark Office
P.O. Box 1450
Alexandria, VA 22313-1450
www.uspto.gov

**ILYA ZBOROVSKY**
**3 COURTYARD CIRCLE**
**CENTERPORT NY 11721**

MAILED
DEC 05 2011
OFFICE OF PETITIONS

| | | |
|---|---|---|
| In re Application of | : | |
| Zhadanov | : | |
| Application No. 10/418,581 | : | DECISION ON PETITION |
| Filed: April 19, 2003 | : | |
| For: DEVICE FOR SUPPORTING | : | |
| BATHROOM ACCESSORIES AND THE | : | |
| LIKE | : | |

This is a decision on the petition under the unintentional provisions of 37 CFR 1.137(b), filed September 19, 2011, to revive the above-identified application.

The petition is **GRANTED**.

This application has been abandoned for an extended period of time. The U.S. Patent and Trademark Office is relying on petitioner's duty of candor and good faith and accepting the statement that "the entire delay in filing the required reply from the due date for the reply until the filing of a grantable petition pursuant to 37 CFR 1.137(b) was unintentional." *See* Changes to Patent Practice and Procedure, 62 Fed. Reg., at 53160 and 53178; 1203 Off. Gaz. Pat. Office, at 88 and 103 (responses to comments 64 and 109) (applicant obligated under 37 CFR 10.18 to inquire into the underlying facts and circumstances when providing the statement required by 37 CFR 1.137(b) to the U.S. Patent and Trademark Office).

The petition satisfies the conditions for revival pursuant to the provisions of 37 CFR 1.137(b) in that (1) the reply in the form of an amendment; (2) the petition fee; and (3) the required statement of unintentional delay have been received. Accordingly, the reply to the nonfinal Office action mailed July 20, 201, is accepted as having been unintentionally delayed.

Telephone inquiries concerning this decision should be directed to the undersigned at (571) 272-3208.

This application is being referred to Technology Center AU 3632 for appropriate action by the Examiner in the normal course of business on the reply received September 19, 2011.

/KOC/
Karen Creasy
Petitions Examiner
Office of Petitions

UNITED STATES PATENT AND TRADEMARK OFFICE

UNITED STATES DEPARTMENT OF COMMERCE
United States Patent and Trademark Office
Address: COMMISSIONER FOR PATENTS
P.O. Box 1450
Alexandria, Virginia 22313-1450
www.uspto.gov

QUALCOMM INCORPORATED
5775 MOREHOUSE DR.
SAN DIEGO, CA 92121

Mail Date: 08/04/2010

| | | |
|---|---|---|
| **Applicant** | : Leonid Sheynblat | : DECISION ON REQUEST FOR |
| **Patent Number** | : 7660588 | : RECALCULATION of PATENT |
| **Issue Date** | : 02/09/2010 | : TERM ADJUSTMENT IN VIEW |
| **Application No** | : 10/418,799 | : OF WYETH AND NOTICE OF INTENT TO |
| **Filed** | : 04/17/2003 | : ISSUE CERTIFICATE OF CORRECTION |
| | | : |

The Request for Recalculation is **GRANTED** to the extent indicated.

The patent term adjustment has been determined to be **1096** days. The USPTO will *sua sponte* issue a certificate of correction reflecting the amount of PTA days determined by the recalculation.

Prior to the issuance of the certificate of correction, the USPTO will afford patentee an opportunity to be heard and request reconsideration. Accordingly, patentee has **one month or thirty (30) days**, whichever is longer, to file a request for reconsideration of this patent term adjustment calculation. See 35 U.S.C. 154(b)(3)(B)(ii) and 37 CFR 1.322(a)(4). No extensions of time will be granted under 37 CFR 1.136.

Patentee should use document code PET.OP if electronically filing a request for reconsideration of this patent term adjustment calculation. The patentee must also include the information required by 37 CFR 1.705(b)(2) and the fee required by 37 CFR 1.18(e). If patentee does not file a timely request for reconsideration of this patent term adjustment calculation including the information required by 37 CFR 1.705(b)(2) and the fee required by 37 CFR 1.18(e), the USPTO will issue a certificate of correction reflecting the PTA determination noted above.

Patentee should be aware that in order to preserve the right to review in the United States District Court for the District of Columbia of the USPTO patent term adjustment determination, patentee must ensure that he or she also take the steps required under 35 U.S.C. 154(b)(4)(A) in a timely manner. Nothing in the request for recalculation should be construed as providing an alternative time frame for commencing a civil action under 35 U.S.C. 154(b)(4)(A).

Any questions concerning this decision should be directed to the Office of Patent Legal Administration at 571-272-7702.

Doc code : PET.OP.AGE
Description : Petition to make special based on Age/Health

PTO/SB/130 (07-09)
Approved for use through 07/31/2012. OMB 0651- 0031
U.S. Patent and Trademark Office; U.S. DEPARTMENT OF COMMERCE
Under the Paperwork Reduction Act of 1995, no persons are required to respond to a collection of information unless it contains a valid OMB control number

# PETITION TO MAKE SPECIAL BASED ON AGE FOR ADVANCEMENT OF EXAMINATION UNDER 37 CFR 1.102(c)(1)

## Application Information

| | | | | | |
|---|---|---|---|---|---|
| Application Number | 10418925 | Confirmation Number | 9204 | Filing Date | 2003-04-18 |
| Attorney Docket Number (optional) | 54024-39478 | Art Unit | 3781 | Examiner | Smalley |
| First Named Inventor | Charles E. Hall | | | | |
| Title of Invention | Universal Box Top Lid | | | | |

**Attention: Office of Petitions**
An application may be made special for advancement of examination upon filing of a petition showing that the applicant is 65 years of age, or more. No fee is required with such a petition. See 37 CFR 1.102(c)(1) and MPEP 708.02 (IV).

APPLICANT HEREBY PETITIONS TO MAKE SPECIAL FOR ADVANCEMENT OF EXAMINATION IN THIS APPLICATION UNDER 37 CFR 1.102(c)(1) and MPEP 708.02 (IV) ON THE BASIS OF THE APPLICANT'S AGE.

A grantable petition requires one of the following items:
(1) Statement by one named inventor in the application that he/she is 65 years of age, or more; or
(2) Certification by a registered attorney/agent having evidence such as a birth certificate, passport, driver's license, etc. showing one named inventor in the application is 65 years of age, or more.

**Name of Inventor who is 65 years of age, or older**

| Given Name | Middle Name | Family Name | Suffix |
|---|---|---|---|
| Charles | E. | Hall | |

A signature of the applicant or representative is required in accordance with 37 CFR 1.33 and 10.18.
Please see 37 CFR 1.4(d) for the format of the signature.

Select (1) or (2) :

○ (1) I am an inventor in this application and I am 65 years of age, or more.

● (2) I am an attorney or agent registered to practice before the Patent and Trademark Office, and I certify that I am in possession of evidence, and will retain such in the application file record, showing that the inventor listed above is 65 years of age, or more.

| | | | |
|---|---|---|---|
| Signature | /Joseph M. Rolnicki/ | Date (YYYY-MM-DD) | 2011-05-20 |
| Name | Joseph M. Rolnicki | Registration Number | 32653 |

PTO/SB/130 (07-09)
Approved for use through 07/31/2012. OMB 0651- 0031
U.S. Patent and Trademark Office; U.S. DEPARTMENT OF COMMERCE
Under the Paperwork Reduction Act of 1995, no persons are required to respond to a collection of information unless it contains a valid OMB control number

# Privacy Act Statement

The Privacy Act of 1974 (P.L. 93-579) requires that you be given certain information in connection with your submission of the attached form related to a patent application or patent. Accordingly, pursuant to the requirements of the Act, please be advised that: (1) the general authority for the collection of this information is 35 U.S.C. 2(b)(2); (2) furnishing of the information solicited is voluntary; and (3) the principal purpose for which the information is used by the U.S. Patent and Trademark Office is to process and/or examine your submission related to a patent application or patent. If you do not furnish the requested information, the U.S. Patent and Trademark Office may not be able to process and/or examine your submission, which may result in termination of proceedings or abandonment of the application or expiration of the patent.

The information provided by you in this form will be subject to the following routine uses:

1. The information on this form will be treated confidentially to the extent allowed under the Freedom of Information Act (5 U.S.C. 552) and the Privacy Act (5 U.S.C. 552a). Records from this system of records may be disclosed to the Department of Justice to determine whether the Fr eedom of Information Act requires disclosure of these records.

2. A record from this system of records may be disclosed, as a routine use, in the course of presenting evidence to a court, magistrate, or administrative tribunal, including disclosures to opposing counsel in the course of settlement negotiations.

3. A record in this system of records may be disclosed, as a routine use, to a Member of Congress submitting a request involving an individual, to whom the record pertains, when the individual has requested assistance from the Member with respect to the subject matter of the record.

4. A record in this system of records may be disclosed, as a routine use, to a contractor of the Agency having need for the information in order to perform a contract. Recipients of information shall be required to comply with the requirements of the Privacy Act of 1974, as amended, pursuant to 5 U.S.C. 552a(m).

5. A record related to an International Application filed under the Patent Cooperation Treaty in this system of records may be disclosed, as a routine use, to the International Bureau of the World Intellectual Property Organization, pursuant to the Patent Cooperation Treaty.

6. A record in this system of records may be disclosed, as a routine use, to another federal agency for purposes of National Security review (35 U.S.C. 181) and for review pursuant to the Atomic Energy Act (42 U.S.C. 218(c)).

7. A record from this system of records may be disclosed, as a routine use, to the Administrator, General Services, or his/her designee, during an inspection of records conducted by GSA as part of that agency's responsibility to recommend improvements in records management practices and programs, under authority of 44 U.S.C. 2904 and 2906. Such disclosure shall be made in accordance with the GSA regulations governing inspection of records for this purpose, and any other relevant (i.e., GSA or Commerce) directive. Such disclosure shall not be used to make determinations about indivi duals.

8. A record from this system of records may be disclosed, as a routine use, to the public after either publication of the application pursuant to 35 U.S.C. 122(b) or issuance of a patent pursuant to 35 U.S.C. 151. Further, a record may be disclosed, subject to the limitations of 37 CFR 1.14, as a routine use, to the public if the record was filed in an application which became abandoned or in which the proceedings were terminated and which application is referenced by either a published application, an application open to public inspections or an issued patent.

9. A record from this system of records may be disclosed, as a routine use, to a Federal, State, or local law enforcement agency, if the USPTO becomes aware of a violation or potential violation of law or regulation.

UNITED STATES PATENT AND TRADEMARK OFFICE

Commissioner for Patents
United States Patent and Trademark Office
P.O. Box 1450
Alexandria, VA 22313-1450
www.uspto.gov

In re Application of
Charles E. Hall

Application No. 10418925

Filed: April 18,2003

Attorney Docket No. 54024-39478

:DECISION ON PETITION TO MAKE SPECIAL
:UNDER 37 CFR 1.102(c)(1)

This is a decision on the electronic petition under 37 CFR 1.102 (c)(1), filed 20-MAY-2011 to make the above-identified application special based on applicant's age as set forth in MPEP § 708.02, Section IV.

The petition is **GRANTED**.

A grantable petition to make an application special under 37 CFR 1.102(c)(1), MPEP § 708.02, Section IV: Applicant's Age must include a statement by applicant or a registered practitioner having evidence that applicant is at least 65 years of age. No fee is required.

Accordingly, the above-identified application has been accorded "special" status and will be taken up for action by the examiner upon the completion of all pre-examination processing.

Telephone inquiries concerning this electronic decision should be directed to the Electronic Business Center at 866-217-9197.

All other inquiries concerning either the examination or status of the application should be directed to the Technology Center.

PTO/SB/66 (03-09)
Approved for use through 03/31/2012. OMB 0651-0016
U.S. Patent and Trademark Office: U.S. DEPARTMENT OF COMMERCE
Under the Paperwork Reduction Act of 1995, no persons are required to respond to a collection of information unless it displays valid OMB control number.

# PETITION TO ACCEPT UNINTENTIONALLY DELAYED PAYMENT OF MAINTENANCE FEE IN AN EXPIRED PATENT (37 CFR 1.378(c))

| Patent Number | Issue Date (YYYY-MM-DD) | Application Number | Filing Date (YYYY-MM-DD) | Docket Number (if applicable) |
|---|---|---|---|---|
| 7039950 | 2006-05-02 | 10419548 | 2003-04-21 | 3066-001 |

CAUTION: Maintenance fee (and surcharge, if any) payment must correctly identify: (1) the patent number and (2) the application number of the actual U.S. application leading to issuance of that patent to ensure the fee(s) is/are associated with the correct patent. 37 CFR 1.366(c) and (d).

SMALL ENTITY
☐ Patentee claims, or has previously claimed, small entity status. See 37 CFR 1.27.

LOSS OF ENTITLEMENT TO SMALL ENTITY STATUS
☐ Patentee is no longer entitled to small entity status. See 37 CFR 1.27(g)

| NOT Small Entity | | | Small Entity | | |
|---|---|---|---|---|---|
| | Fee | Code | | Fee | Code |
| ◉ | 3 ½ year | (1551) | ◯ | 3 ½ year | (2551) |
| ◯ | 7 ½ year | (1552) | ◯ | 7 ½ year | (2552) |
| ◯ | 11 ½ year | (1553) | ◯ | 11 ½ year | (2553) |

SURCHARGE
The surcharge required by 37 CFR 1.20(i)(2) (Fee Code 1558) must be paid as a condition of accepting unintentionally delayed payment of the maintenance fee.

MAINTENANCE FEE (37 CFR 1.20(e)-(g))
The appropriate maintenance fee must be submitted with this petition.

STATEMENT
THE UNDERSIGNED CERTIFIES THAT THE DELAY IN PAYMENT OF THE MAINTENANCE FEE TO THIS PATENT WAS UNINTENTIONAL

PETITIONER(S) REQUEST THAT THE DELAYED PAYMENT OF THE MAINTENANCE FEE BE ACCEPTED AND THE PATENT REINSTATED

THIS PORTION MUST BE COMPLETED BY THE SIGNATORY OR SIGNATORIES

37 CFR 1.378(d) states: "Any petition under this section must be signed by an attorney or agent registered to practice before the Patent and Trademark Office, or by the patentee, the assignee, or other party in interest."

I certify, in accordance with 37 CFR 1.4(d)(4) that I am

◉ An attorney or agent registered to practice before the Patent and Trademark Office

◯ A sole patentee

◯ A joint patentee; I certify that I am authorized to sign this submission on behalf of all the other patentees.

◯ A joint patentee; all of whom are signing this e-petition

◯ The assignee of record of the entire interest

Under the Paperwork Reduction Act of 1995, no persons are required to respond to a collection of information unless it displays valid OMB control number.

| Patent Practitioner | | | |
|---|---|---|---|
| A signature of the applicant or representative is required in accordance with 37 CFR 1.33 and 10.18. Please see 37 CFR 1.4(d) for the form of the signature | | | |
| Signature | /Jay A. Bondell/ | Date (YYYY-MM-DD) | 2011-01-24 |
| Name | Jay A. Bondell | Registration Number | 28188 |

This collection of information is required by 37 CFR 1.378(c). The information is required to obtain or retain a benefit by the public which is to file (and by the USPTO to process) an application. Confidentiality is governed by 35 U.S.C. 122 and 37 CFR 1.11 and 1.14. This collection is estimated to take 1 hour to complete, including gathering, preparing, and submitting the completed application form to the USPTO. Time will vary depending upon the individual case. Any comments on the amount of time you require to complete this form and/ or suggestions for reducing this burden, should be sent to the Chief Information Officer, U.S. Patent and Trademark Office, U.S. Department of Commerce, P.O. Box 1450, Alexandria, VA 22313-1450. DO NOT SEND FEES OR COMPLETED FORMS TO THIS ADDRESS. **This form can only be used when in conjunction with EFS-Web. If this form is mailed to the USPTO, it may cause delays in reinstating the patent.**

# Privacy Act Statement

The Privacy Act of 1974 (P.L. 93-579) requires that you be given certain information in connection with your submission of the attached form related to a patent application or patent. Accordingly, pursuant to the requirements of the Act, please be advised that: (1) the general authority for the collection of this information is 35 U.S.C. 2(b)(2); (2) furnishing of the information solicited is voluntary; and (3) the principal purpose for which the information is used by the U.S. Patent and Trademark Office is to process and/or examine your submission related to a patent application or patent. If you do not furnish the requested information, the U.S. Patent and Trademark Office may not be able to process and/or examine your submission, which may result in termination of proceedings or abandonment of the application or expiration of the patent.

The information provided by you in this form will be subject to the following routine uses:

1. The information on this form will be treated confidentially to the extent allowed under the Freedom of Information Act (5 U.S.C. 552) and the Privacy Act (5 U.S.C. 552a). Records from this system of records may be disclosed to the Department of Justice to determine whether the Freedom of Information Act requires disclosure of these records.

2. A record from this system of records may be disclosed, as a routine use, in the course of presenting evidence to a court, magistrate, or administrative tribunal, including disclosures to opposing counsel in the course of settlement negotiations.

3. A record in this system of records may be disclosed, as a routine use, to a Member of Congress submitting a request involving an individual, to whom the record pertains, when the individual has requested assistance from the Member with respect to the subject matter of the record.

4. A record in this system of records may be disclosed, as a routine use, to a contractor of the Agency having need for the information in order to perform a contract. Recipients of information shall be required to comply with the requirements of the Privacy Act of 1974, as amended, pursuant to 5 U.S.C. 552a(m).

5. A record related to an International Application filed under the Patent Cooperation Treaty in this system of records may be disclosed, as a routine use, to the International Bureau of the World Intellectual Property Organization, pursuant to the Patent Cooperation Treaty.

6. A record in this system of records may be disclosed, as a routine use, to another federal agency for purposes of National Security review (35 U.S.C. 181) and for review pursuant to the Atomic Energy Act (42 U.S.C. 218(c)).

7. A record from this system of records may be disclosed, as a routine use, to the Administrator, General Services, or his/her designee, during an inspection of records conducted by GSA as part of that agency's responsibility to recommend improvements in records management practices and programs, under authority of 44 U.S.C. 2904 and 2906. Such disclosure shall be made in accordance with the GSA regulations governing inspection of records for this purpose, and any other relevant (i.e., GSA or Commerce) directive. Such disclosure shall not be used to make determinations about individuals.

8. A record from this system of records may be disclosed, as a routine use, to the public after either publication of the application pursuant to 35 U.S.C. 122(b) or issuance of a patent pursuant to 35 U.S.C. 151. Further, a record may be disclosed, subject to the limitations of 37 CFR 1.14, as a routine use, to the public if the record was filed in an application which became abandoned or in which the proceedings were terminated and which application is referenced by either a published application, an application open to public inspections or an issued patent.

9. A record from this system of records may be disclosed, as a routine use, to a Federal, State, or local law enforcement agency, if the USPTO becomes aware of a violation or potential violation of law or regulation.

UNITED STATES PATENT AND TRADEMARK OFFICE

Commissioner for Patents
United States Patent and Trademark Office
P.O. Box 1450
Alexandria, VA 22313-1450
www.uspto.gov

In re Patent No. 7039950
Issue Date: May 2,2006
Application No. 10419548
Filed: April 21,2003
Attorney Docket No. IPL-006

:
:DECISION GRANTING PETITION
:UNDER 37 CFR 1.378(c)
:

This is a decision on the electronic petition, filed January 24,2011 ,under 37 CFR 1.378(c) to accept the unintentionally delayed payment of the 3.5 year maintenance fee for the above-identified patent.

The petition is **GRANTED**.

The maintenance fee is accepted, and the above-identified patent reinstated as of January 24,2011 . This decision also constitutes notice that the fee has been accepted. An electronic copy of the petition and this decision has been created as an entry in the Image File Wrapper. Nevertheless, petitioner should print and retain an independent copy.

Telephone inquiries related to this electronic decision should be directed to the Electronic Business Center at 1-866-217-9197.

UNITED STATES PATENT AND TRADEMARK OFFICE

Commissioner for Patents
United States Patent and Trademark Office
P.O. Box 1450
Alexandria, VA 22313-1450
www.uspto.gov

HUSCH BLACKWELL, LLP
190 Carondelet Plaza
Suite 600
ST. LOUIS, MO 63105

**MAILED**

MAR 11 2011

**OFFICE OF PETITIONS**

In re Application of :
Chulhee Lee :
Application No. 10/419,830 : ON PETITION
Filed: April 22, 2003 :
Attorney Docket No. 508315.8 :

This is a decision on the petition under 37 CFR 1.137(b), filed December 17, 2010, to revive the above-identified application.

The application became abandoned for failure to file a reply to the Restriction/Election Requirement mailed July 3, 2007. A Notice of Abandonment was mailed on June 20, 2008.

The petition satisfies the requirements of 37 CFR 1.137(b) in that petitioner has supplied (1) the reply in the form of an election; (2) the petition fee of $810; and (3) a proper statement of unintentional delay. Therefore, the petition is **GRANTED**.

This application file is being referred to Technology Center Art Unit 2614 for review of the response filed with the present petition.

Telephone inquiries concerning this decision should be directed to the undersigned at (571) 272-3226.

Andrea Smith
Petitions Examiner
Office of Petitions

UNITED STATES PATENT AND TRADEMARK OFFICE

Commissioner for Patents
United States Patent and Trademark Office
P.O. Box 1450
Alexandria, VA 22313-1450
www.uspto.gov

K&L GATES LLP
PO BOX 1135
CHICAGO IL 60690

**MAILED**

NOV 29 2011

**OFFICE OF PETITIONS**

| | | |
|---|---|---|
| In re Application | : | DECISION ON APPLICATION |
| Walker, et al. | : | FOR PATENT TERM ADJUSTMENT |
| Application No. 10/420,066 | : | AND NOTICE OF INTENT |
| Filed: April 21, 2003 | : | TO ISSUE |
| Patent No. 8,021,229 | : | CERTIFICATE OF CORRECTION |
| Issued: September 20, 2011 | : | |
| Docket No. 3718582-00339 | : | |

This is a decision on the petition under 37 CFR 1.705(d), filed November 9, 2011. Patentees request that the determination of patent term adjustment under 35 U.S.C. 154(b) be corrected from eight hundred twenty-eight (828) days to seven hundred fifty-eight (758) days.

The application for patent term adjustment is **GRANTED**.

On September 20, 2011, the above patent issued with a patent term adjustment of eight hundred twenty-eight (828) days. The Office determined a patent term adjustment of 828 days based on 996 days of "A" delay and 555 days of "B" delay, reduced by 189 days of overlap between "A" and "B" delay, and 534 days of Applicant delay.

Patentee points out that he should have been assessed additional days of delay under 37 CFR 1.704(c)(8). Applicants filed an IDS on January 7, 2008, subsequent to an RCE filed on October 29, 2007. Accordingly, pursuant to 37 CFR 1.704(c)(8), seventy (70) days of applicant delay should have been assessed.

In view thereof, the correct determination of patent term adjustment at the time of the mailing of the Notice of Allowance is **seven hundred fifty-eight (758) days** (996 days of "A" delay plus 555 days of "B" delay, reduced by 189 days of overlap and 604 days of applicant delay).

Receipt of the $200 fee for filing the instant application for patent term adjustment is acknowledged.

The application is being forwarded to the Certificates of Correction Branch for issuance of a certificate of correction in order to rectify the error regarding the patent term information. See 35 U.S.C. § 254 and 37 C.F.R. § 1.322. The certificate of correction will indicate that the term of the above-identified patent is extended or adjusted by **seven hundred fifty-eight (758)** days subject to any disclaimers.

Telephone inquiries specific to this matter should be directed to the undersigned at (571)272-3207.

Cliff Congo
Petitions Attorney
Office of Petitions

Enc: Draft Certificate of Correction

UNITED STATES PATENT AND TRADEMARK OFFICE

# DRAFT CERTIFICATE OF CORRECTION

PATENT : 8,021,229 B2

DATED : **September 20, 2011**

INVENTOR(S) : Walker et al.

It is certified that error appears in the above-identified patent and that said Letters Patent is hereby corrected as shown below:

On the cover page,

[*] Notice: Subject to any disclaimer, the term of this patent is extended or adjusted under 35 USC 154(b) by 828 days.

Delete the phrase "by 828 days" and insert – by 758 days--

UNITED STATES PATENT AND TRADEMARK OFFICE

Commissioner for Patents
United States Patent and Trademark Office
P.O. Box 1450
Alexandria, VA 22313-1450
www.uspto.gov

MAILED
MAY 20 2011
OFFICE OF PETITIONS

MAYER BROWN LLP
P.O. BOX 2828
CHICAGO IL 60690

| | |
|---|---|
| In re Application | : |
| Mechthild Kunst | : |
| Application No. 10/420,094 | : DECISION ON APPLICATION |
| Filed: April 22, 2003 | : FOR PATENT TERM ADJUSTMENT |
| Attorney Docket No. **03142963** | : |

This is in response to the "APPLICATION FOR PATENT TERM ADJUSTMENT" filed February 14, 2011. Applicant requests that the determination of patent term adjustment be corrected from 950 days to 1066 days.

The application for patent term adjustment is **DISMISSED**.

On March 1, 2007, with a one month extension of time, Applicants filed a response to the non-Final Office Action mailed November 2, 2006. Thereafter, a Notice of Non-Responsive Amendment was mailed June 1, 2007 to which Applicants filed a response on June 29, 2007. Applicants argue that there should not have been a 116 day reduction of patent term adjustment attributable to Applicant for the period beginning March 5, 2007 and ending June 29, 2007 because; "(1) Applicant's reply to the November 2, 2006 Office Action, filed on March 1, 2007, was a fully responsive reply, as subsequently recognized by the Examiner; and (2) the Notice of Non-Responsive Amendment was improperly/incorrectly issued by the Examiner.

Pursuant to 37 CFR § 1.704(c), circumstances that constitute a failure of the applicant to engage in reasonable efforts to conclude processing or examination of an application also include the following circumstances, which will result in the following reduction of the period of adjustment set forth in § 1.703 to the extent that the periods are not overlapping:

> (7) Submission of a reply having an omission (§1.135(c)), in which case the period of adjustment set forth in § 1.703 shall be reduced by the number of days, if any, beginning on the day after the date the reply having an omission was filed and ending on the date that the reply or other paper correcting the omission was filed;

It is undisputed that a reply was filed on March 5, 2007 however, that reply had an omission and the omission was corrected on June 29, 2007, one hundred sixteen (116) days after the filing of the initial response on March 5, 2007. Therefore the reduction is proper. The record does not support a conclusion, as indicated by applicant, that the response filed March 1, 2007 or March 5, 2007 was fully responsive. Applicant indicates that "Because the next communication received from the USPTO was a new Office Action which provided new grounds for rejection, the Examiner implicitly recognized, after the response to the NNRA was filed, that the March 1, 2007 reply was indeed fully responsive." Applicant is advised that the fact that a new Office action was mailed in response to the corrected response does not at all establish that the response was fully responsive.

In view thereof, it is concluded that the determination of patent term adjustment at the time of the mailing of the Notice of Allowance is 950 days.

The Office acknowledges submission of the $200.00 fee set forth in 37 CFR 1.18(e). No additional fees are required.

Applicants are reminded that any delays by the Office pursuant to 37 CFR 1.702(a)(4) and 1.702(b) and any applicant delays under 37 CFR 1.704(c)(10) will be calculated at the time of the issuance of the patent and applicants will be notified of the revised patent term adjustment to be indicated on the patent in the Issue Notification letter that is mailed to applicants approximately three weeks prior to issuance.

The application is being forwarded to the Office of Data Management for issuance of the patent. The patent term adjustment indicated on the patent (as shown on the Issue Notification mailed about three weeks prior to patent issuance) will include any additional adjustment accrued both for Office delay in issuing the patent more than four months after payment of the issue fee and satisfaction of all outstanding requirements, and for the Office taking in excess of three years to issue the patent (to the extent that the three-year period does not overlap with periods already accorded).

Telephone inquiries specific to this decision should be directed to the undersigned at (571) 272-3212.

Patricia Faison-Ball

Patricia Faison-Ball
Senior Petitions Attorney
Office of Petitions

UNITED STATES PATENT AND TRADEMARK OFFICE

Commissioner for Patents
United States Patent and Trademark Office
P.O. Box 1450
Alexandria, VA 22313-1450
www.uspto.gov

**ROBERT W. PITTS**
**P.O. BOX 11483**
**WINSTON-SALEM NC 27116-1483**

**MAILED**

NOV 07 2011

OFFICE OF PETITIONS

| | | |
|---|---|---|
| In re Patent No. 6,966,441 | : | |
| Issue Date: November 22, 2005 | : | |
| Application No. 10/420,281 | : | DECISION ON PETITION |
| Filed: April 22, 2003 | : | |
| Attorney Docket No. 03004 | : | |

This is a decision on the petition under 37 CFR 1.378(c), filed October 11, 2011, to accept the unintentionally delayed payment of a maintenance fee for the above-identified patent.

The petition is **GRANTED**.

This patent expired on November 22, 2009 for failure to pay the three and one-half year maintenance fee. Since this petition was submitted within twenty-four months after the six-month grace period provided in 37 CFR 1.362(e), the petition was timely filed under the provisions of 37 CFR 1.378(c).

The maintenance fee is hereby accepted and the above-identified patent is reinstated as of the mail date of this decision.

Telephone inquiries concerning this decision should be directed to the undersigned at (571) 272-4231.

The patent file is being forwarded to Files Repository.

Michelle R. Eason
Paralegal Specialist
Office of Petitions

OPAP IAP21 OCT 1 1 2011 PATENT & TRADEMARK OFFICE

10-12-11

Box M 8

PTO/SB/66 (03-09)
Approved for use through 03/31/2012. OMB 0651-0016
U.S. Patent and Trademark Office; U.S. DEPARTMENT OF COMMERCE
Under the Paperwork Reduction Act of 1995, no persons are required to respond to a collection of information unless it displays a valid OMB control number

# PETITION TO ACCEPT UNINTENTIONALLY DELAYED PAYMENT OF MAINTENANCE FEE IN AN EXPIRED PATENT (37 CFR 1.378 (c))

Docket Number (Optional) 11038

Mail to: Mail Stop Petition
Commissioner for Patents
P.O. Box 1450
Alexandria, VA 22313-1450
Fax: (571) 273-8300

10/19/2011 DALLEN 00000002 6966441
01 FC:1599 2205.00 OP

NOTE: If information or assistance is needed in completing this form, please contact Petitions Information at (571) 272-3282.

Patent No. 6,966,441 Application Number 10/420,281

Issue Date 11-22-2005 Filing Date 4-22-1003

USPTO RECEIPTS ACCOUNTING DIVISION 2011 OCT 17 PM 3:26

CAUTION: Maintenance fee (and surcharge, if any) payment must correctly identify: (1) the patent number (or reissue patent number, if a reissue) and (2) the application number of the actual U.S. application (or reissue application) leading to issuance of that patent to ensure the fee(s) is/are associated with the correct patent. 37 CFR 1.366(c) and (d).

**Also complete the following information, if applicable**

The above – identified patent

☐ Is a reissue of original Patent No. _____ original issue date _____

original application number _____

original filing date _____

☐ resulted from the entry into the U.S. under 35 U.S.C. 371 of international application _____

filed on _____

CERTIFICATE OF MAILING (37 CFR 1.89(a))

I hereby certify that this paper (*along with any paper referred to as being attached or enclosed) is being deposited with the United States Postal Service on the date shown below with sufficient postage as first class main in an envelope addressed to Mail Stop Petition, Commissioner for Patents, P.O. Box 1450, Alexandria, VA 22313-1450, or facsimile transmitted to the U.S. Patent and Trademark Office on the date shown below.

10-11-2011
Date

Robert W. Pitts
Signature

Robert W. Pitts
Typed or Printed Name of Person Signing Certificate

~~11/07/2011 GARIAS 00000011 6966441~~

01 FC:2551 565.00 OP
02 FC:1558 1640.00 OP

Adjustment date: 11/07/2011 GARIAS
10/19/2011 DALLEN 00000002 6966441
01 FC:1599 -2205.00 OP



This collection of information is required by 37 CFR 1.378(c). The information is required to obtain or retain a benefit by the public which is to file (and by the USPTO to process) an application. Confidentiality is governed by 35 U.S.C. 122 and 37 CFR 1.11 and 1.14. This collection is estimated to take 1 hour to complete, including gathering, preparing, and submitting the completed application form to the USPTO. Time will vary depending upon the individual case. Any comments on the amount of time you require to complete this form and/or suggestions for reducing this burden, should be sent to the Chief Information Officer, U.S. Patent and Trademark Office, U.S. Department of Commerce, P.O. Box 1450, Alexandria, Virginia 22313-1450. DO NOT SEND FEES OR COMPLETED FORMS TO THIS ADDRESS. **SEND TO: Mail Stop Petition, Commissioner for Patents, P.O. Box 1450, Alexandria, Virginia 22313-1450**

*If you need assistance in completing the form, call 1-800-PTO-9199 and select option 2.*

Under the Paperwork Reduction Act of 1995, no persons are required to respond to a collection of information unless it displays a valid OMB control number

1. SMALL ENTITY

☑ Patentee claims, or has previously claimed, small entity status. See 37 CFR 1.27.

2. LOSS OF ENTITLEMENT TO SMALL ENTITY STATUS

☐ Patentee is no longer entitled to small entity status. See 37 CFR 1.27(g)

3. MAINTENANCE FEE (37 CFR 1.20(e)-(g))

The appropriate maintenance fee must be submitted with this petition, unless it was paid earlier.

| NOT Small Entity | | | Small Entity | | |
|---|---|---|---|---|---|
| Amount | Fee | (Code) | Amount | Fee | (Code) |
| ☐ $ _____ | 3 ½ yr fee | (1551) | ☑ $ 565 | 3 ½ yr fee | (2551) |
| ☐ $ _____ | 7 ½ yr fee | (1552) | ☐ $ _____ | 7 ½ yr fee | (2552) |
| ☐ $ _____ | 11 ½ yr fee | (1553) | ☐ $ _____ | 11 ½ yr fee | (2553) |

MAINTENANCE FEE BEING SUBMITTED $ 565

4. SURCHARGE

The surcharge required by 37 CFR 1.20(i)(2) of $ 1640 (Fee Code 1558) must be paid as a condition of accepting unintentionally delayed payment of a maintenance fee.

SURCHARGE FEE BEING SUBMITTED $ 1640

5. MANNER OF PAYMENT

☑ Enclosed is a check for the sum of $ 2205

☐ Please charge Deposit Account No. _____ the sum of $ _____

☐ Payment by credit card. Form PTO-2038 is attached.

6. AUTHORIZATION TO CHARGE ANY FEE DEFICIENCY

☐ The Director is hereby authorized to charge any maintenance fee, surcharge or petition deficiency to Deposit Account No. _____

Under the Paperwork Reduction Act of 1995, no persons are required to respond to a collection of information unless it displays a valid OMB control number

7. OVERPAYMENT

As to any overpayment made please

☐ Credit to Deposit Account No. _____

OR

☑ Send refund check

**WARNING:**

Petitioner/applicant is cautioned to avoid submitting personal information in documents filed in a patent application that may contribute to identity theft. Personal information such as social security numbers, bank account numbers, or credit card numbers (other than a check or credit card authorization form PTO-2038 submitted for payment purposes) is never required by the USPTO to support a petition or an application. If this type of personal information is included in documents submitted to the USPTO, petitioners/applicants should consider redacting such personal information from the documents before submitting them to the USPTO. Petitioner/applicant is advised that the record of a patent application is available to the public after publication of the application (unless a non-publication request in compliance with 37 CFR 1.213(a) is made in the application or issuance of a patent. Furthermore, the record from an abandoned application may also be available to the public if the application is referenced in a published application or an issued patent (see 37 CFR 1.14). Checks and credit card authorization forms PTO-2038 submitted for payment purposes are not retained in the application file and therefore are not publicly available.

8. STATEMENT

The delay in payment of the maintenance fee to this patent was unintentional.

9. PETITIONER(S) REQUEST THAT THE DELAYED PAYMENT OF THE MAINTENANCE FEE BE ACCEPTED AND THE PATENT REINSTATED

Robert W. Pitts — Signature(s) of Petitioner(s)

10-11-2011 — Date

Robert W. Pitts — Typed or printed name(s)

27372 — Registration Number, if applicable

336-760-9565 — Telephone Number

101B Westgate Circle — Address

Winston-Salem, NC 27106 — Address

37 CFR 1.378(d) states: "Any petition under this section must be signed by an attorney or agent registered to practice before the Patent and Trademark Office, or by the patentee, the assignee, or other party in interest."

ENCLOSURES

☑ Maintenance Fee Payment

☑ Surcharge under 37 CFR 1.20(i)(2) (fee for filing the maintenance fee petition)

☐ _____

UNITED STATES PATENT AND TRADEMARK OFFICE

Commissioner for Patents
United States Patent and Trademark Office
P.O. Box 1450
Alexandria, VA 22313-1450
www.uspto.gov

MAILED

OCT 28 2010

OFFICE OF PETITIONS

**DURECT CORPORATION**
**THOMAS P. MCCRACKEN**
**2 RESULTS WAY**
**CUPERTINO CA 95014**

| | | |
|---|---|---|
| In re Application of | : | |
| Robert M. Gale, et al. | : | |
| Application No. 10/420,428 | : | ON PETITION |
| Filed: April 22, 2003 | : | |
| Attorney Docket No. DURE-343 | : | |

This is a decision on the petition under the unintentional provisions of 37 CFR 1.137(b), filed September 28, 2010, to revive the above-identified application.

The petition is **GRANTED**.

The application became abandoned for failure to timely file a reply within the meaning of 37 CFR 1.113 to the final Office action of March 2, 2009. The proposed reply required for consideration of a petition to revive must be a Notice of Appeal (and appeal fee required by 37 CFR 41.20(b)(2), an amendment that *prima facie* places the application in condition for allowance, a Request for Continued Examination and submission (37 CFR 1.114), or the filing of a continuing application under 37 CFR 1.53(b). See MPEP 711.03(c)(III)(A)(2). No extensions of time pursuant to the provisions of 37 CFR 1.136(a) were obtained. Accordingly, the date of abandonment of this application is June 3, 2010. The Notice of Abandonment was mailed December 1, 2009.

The petition satisfies the requirements of 37 CFR 1.137(b) in that petitioner has supplied (1) the reply in the form of a Request for Continued Examination (RCE) and fee of $810, and the submission required by 37 CFR 1.114; (2) the petition fee of $1,620; and (3) a proper statement of unintentional delay.

Telephone inquiries concerning this decision should be directed to the undersigned at (571) 272-2991.

This application is being referred to Technology Center AU 1615 for processing of the RCE and for appropriate action by the Examiner in the normal course of business on the amendment submitted in accordance with 37 CFR 1.114.

/Terri Johnson/
Terri Johnson
Petitions Examiner
Office of Petitions

UNITED STATES PATENT AND TRADEMARK OFFICE

Commissioner for Patents
United States Patent and Trademark Office
P.O. Box 1450
Alexandria, VA 22313-1450
www.uspto.gov

GENERAL COUNSEL'S OFFICE
THE AEROSPACE CORPORATION
2350 EAST EL SEGUNDO BOULEVARD
MAIL STOP M1/040
EL SEGUNDO, CA 90245

MAILED
APR 20 2011
OFFICE OF PETITIONS

In re Patent No. 7,045,246 :
Issue Date: May 16, 2006 :
Application No. 10/420,463 : NOTICE
Filed: April 22, 2003 :
Attorney Docket No. D-454

This is a notice regarding your request for acceptance of a fee deficiency submission under 37 CFR 1.28. On September 1, 1998, the Court of Appeals for the Federal Circuit held that 37 CFR 1.28(c) is the sole provision governing the time for correction of the erroneous payment of the issue fee as a small entity. **See DH Technology v. Synergystex International, Inc. 154 F.3d 1333, 47 USPQ2d 1865 (Fed. Cir. Sept. 1, 1998).**

The Office no longer investigates or rejects original or reissue applications under 37 CFR 1.56. **1098 Off. Gaz. Pat. Office 502 (January 3, 1989)**. Therefore, nothing in this Notice is intended to imply that an investigation was done.

Your fee deficiency submission under 37 CFR 1.28 is hereby **ACCEPTED**.

The file does not indicate a change of address has been submitted, although the address given on the petition differs from the address of record. If appropriate, a change of address should be filed in accordance with MPEP 601.03. A courtesy copy of this decision is being mailed to the address given on the petition; however, the Office will mail all future correspondence solely to the address of record.

Inquiries related to this communication should be directed to Irvin Dingle at (571) 272-3210.

Irvin Dingle
Petitions Examiner
Office of Petitions

cc: Mark Swanson
Bradley Arant Boult Cummings LLP
200 Clinton Ave. West, Suite 900
Huntsville, AL 35801-4900

UNITED STATES PATENT AND TRADEMARK OFFICE

Commissioner for Patents
United States Patent and Trademark Office
P.O. Box 1450
Alexandria, VA 22313-1450
www.uspto.gov

MAILED

JAN 11 2011
OFFICE OF PETITIONS

**Attn; John Y. Chen**
**APPLIED ELASTOMERICS, INC**
**163 WEST HARRIS AVENUE**
**SOUTH SAN FRANCISCO CA 94080**

| | | |
|---|---|---|
| In re Patent No. 7,134,929 | : | |
| Issue Date: November 14, 2006 | : | |
| Application No. 10/420,488 | : | ON PETITION |
| Filed: April 21, 2003 | : | |
| Attorney Docket No. 55 | : | |

This is a decision on the petition under 37 CFR 1.378(c), filed November 16, 2010, to accept the unintentionally delayed payment of a maintenance fee for the above-identified patent.

The petition is **GRANTED**.

This patent expired on November 15, 2010 for failure to pay the three and one-half year maintenance fee. Since this petition was submitted within twenty-four months after the six-month grace period provided in 37 CFR 1.362(e), the petition was timely filed under the provisions of 37 CFR 1.378(c).

The maintenance fee is hereby accepted and the above-identified patent is reinstated as of the mail date of this decision.

Telephone inquiries concerning this decision should be directed to Terri Johnson at (571) 272-2991.

The patent file is being forwarded to Files Repository.

/Terri Johnson/
Terri Johnson
Petitions Examiner
Office of Petitions

UNITED STATES PATENT AND TRADEMARK OFFICE

Commissioner for Patents
United States Patent and Trademark Office
P.O. Box 1450
Alexandria, VA 22313-1450
www.uspto.gov

THOMAS, KAYDEN, HORSTEMEYER & RISLEY LLP
600 GALLERIA PARKWAY, 15TH FLOOR
ATLANTA GA 30339

MAILED

AUG 10 2010

OFFICE OF PETITIONS

| | | |
|---|---|---|
| In re Application of | : | DECISION ON PETITION |
| Chia-Ta Hsieh | : | |
| Application No. 10/420,594 | : | |
| Filed: April 22, 2003 | : | |
| Attorney Docket No. TS01-452B | : | |

This is a decision on the petition under 37 CFR 1.181, filed January 31, 2005, requesting withdrawal of the Notice of Abandonment mailed January 7, 2005.

The petition is **DISMISSED**.

If reconsideration of this decision is desired, a petition for reconsideration under 37 CFR 1.181 must be filed within TWO (2) MONTHS from the mail date of this decision, 37 CFR 1.181(f). No extension of this 2-month time limit can be granted under 37 CFR 1.136(a) or (b).

Petitioner asserts the Notice of Abandonment mailed January 7, 2005 be withdrawn as a response to the restriction requirement of April 5, 2004 was mailed April 8, 2004 and received in the Office in a timely manner.

To support this assertion petitioner has submitted a copy of a return postcard receipt along with an unsigned copy of a certificate of mailing dated May 10, 2004.

A grantable petition to withdraw holding of abandonment under 37 CFR 1.181 based on evidence that a reply was timely mailed or filed requires a postcard receipt that properly identifies the reply and provides *prima facie* evidence that the reply was timely filed. The postcard receipt is not sufficient to establish with reasonable certainty that the response was received in the USPTO in a timely manner because the date stamped on the postcard is outside the period for timely reply to the Office action.

Additionally, a grantable petition to withdraw holding of abandonment under 37 CFR 1.8(b) based on evidence that a reply was timely mailed requires the party who forwarded such correspondence to: (1) Inform the Office of the previous mailing or transmission of the correspondence promptly after becoming aware that the Office has no evidence of receipt of the

correspondence; (2) Supply an additional copy of the previously mailed or transmitted correspondence and certificate; and (3) Include a statement which attests on a personal knowledge basis or to the satisfaction of the Director to the previous timely mailing or transmission.. The instant petition does not include item (3) above.

Any renewed petition may be addressed as follows:

By Mail: Mail Stop PETITION
Commissioner for Patents
P. O. Box 1450
Alexandria, VA 22313-1450

By hand: U. S. Patent and Trademark Office
Customer Service Window, Mail Stop Petitions
Randolph Building
401 Dulany Street
Alexandria, VA 22314

By fax: (571) 273-8300
ATTN: Office of Petitions

Telephone inquiries concerning this decision should be directed to David A. Bucci at (571) 272-7099.

David A. Bucci
Petitions Examiner
Office of Petitions

UNITED STATES PATENT AND TRADEMARK OFFICE

COMMISSIONER FOR PATENTS
UNITED STATES PATENT AND TRADEMARK OFFICE
P.O. BOX 1450

**Mr. Daniel McClure**
**Thomas, Kayden, Horstemeyer & Risley LLP**
**600 Galleria Parkway, 15th Floor**
**Atlanta, Georgia 30339**

MAILED
FEB 02 2011
OFFICE OF PETITIONS

| | | |
|---|---|---|
| In re Application of | : | |
| Chia-Ta HSIEH | : | DECISION DENYING PETITION |
| Application No. 10/420,594 | : | UNDER 37 CFR 1.181 |
| Filed: 22 April 2003 | : | |
| Atty Docket No. 252016-2510 | : | |

This is a decision on the renewed petition under 37 CFR 1.181, filed 20 August 2010, to withdraw the Notice of Abandonment mailed 7 January 2005.

The Petition is **DISMISSED**.

Any request for reconsideration of this decision must be submitted within TWO (2) MONTHS from the mailing date of this decision. Extensions of time under 37 CFR 1.136(a) are permitted. The reconsideration request should include a cover letter entitled "Renewed Petition under 37 CFR 1.137(b)". This is **not** a final agency action within the meaning of 5 U.S.C. § 704.

The application became abandoned for failure to reply in a timely manner to the Restriction Requirement mailed 8 April 2004 ("outstanding Office action"), which set a shortened statutory period of reply of one (1) month. No reply was sent, and no extension of time under the provisions of 37 CFR 1.136(a) was obtained. The application thus became abandoned on 9 May 2004, as an operation of law, with notification mailed 7 January 2005.

Petitioner re-asserts that there was no abandonment in fact, because a response to the outstanding Office action was "... timely filed ...".

In this Request for Reconsideration, Petitioner has submitted a calendar of May 2004 to support the assertion that it was permissible to file a response on 10 May 2004 (8 May 2004 being a Saturday). Further inference is drawn to a copy of a return postcard receipt and an unsigned copy of a certificate of mailing for a "Response to Restriction Requirement" communiqué (the communiqué was also unsigned).

A grantable petition to withdraw a holding of abandonment under 37 CFR 1.181 based upon timely filing an applicable Response can be had by relying upon "Express Mail" procedures evidence, postcard receipt evidence, and/or a certificate of mailing evidence. Relying upon postcard receipt evidence requires the receipt to properly identify the reply and show *prima facie* that the reply was timely filed. For certificate of mailing evidence, in the event the person who is contemporaneously making the statement that the reply was timely mailed is not the same person who originally signed the Certificate of Mailing, then the statement should include additional evidence to support the conclusion the correspondence was actually mailed, for example copies of mailing logs (*see*, MPEP §711.03(c)).

In the present case, Petitioner asserts the Certificate of Mailing shows the response was deposited on 10 May 2004. However, it is noted that the Certificate of Mailing itself is not signed, nor is the Response to which the Certificate of Mailing supposedly adheres. Furthermore, a review of Office records does not show any evidence of a response to the outstanding Office action being filed on or around 10 May 2004. In any event, it is noted that petitioner cannot attest as to whether or not the response was in fact filed as petitioner was not the one who filed the response. Moreover, petitioner has failed to provide supporting evidence that the Response was filed, such as in the form of mailing logs or otherwise.

Regarding the postcard receipt, as previously set forth, the receipt is not sufficient to establish with reasonable certainty that the response was received in the USPTO in a timely manner because the date stamped on the postcard copy is outside the period for timely reply to the Office action. Whereas Petitioner asserts that the receipt date at the USPTO was "May 11, 2004", the receipt copy is stamped "May 12, 2004". In either case, the Office reiterates the date stamp is outside the period of reply.

Applicant is hereby invited to submit a Petition for Revival under 37 CFR 1.137(b) ("unintentional delay").

Further correspondence with respect to this matter should be addressed as follows:

By Mail: Mail Stop PETITION
Commissioner for Patents
P. O. Box 1450
Alexandria, VA 22313-1450

By hand: U. S. Patent and Trademark Office
Customer Service Window, Mail Stop Petitions
Randolph Building
401 Dulany Street
Alexandria, VA 22314

The centralized facsimile number is **(571) 273-8300.**

General inquiries relating to this decision should be directed to Robert DeWitty (571-272-6051), or, if unavailable, the undersigned at 571-272-7099.

David Bucci
Petitions Examiner
Office of Petitions

UNITED STATES PATENT AND TRADEMARK OFFICE

Commissioner for Patents
United States Patent and Trademark Office
P.O. Box 1450

MAILED

APR 19 2011

OFFICE OF PETITIONS

**Mr. Daniel McClure**
**Thomas, Kayden, Horstemeyer & Risley LLP**
**600 Galleria Parkway, 15th Floor**
**Atlanta, Georgia 30339**

| | | |
|---|---|---|
| In re Application of | : | |
| Chia-Ta HSIEH | : | ON PETITION |
| Application No. 10/420,594 | : | |
| Filed: 22 April 2003 | : | |
| Atty Docket No. 252016-2510 | : | |

This is a decision on the petition under 37 CFR 1.137(b), filed February 28, 2011, to revive the above-identified application.

The petition is **GRANTED.**

The application became abandoned for failure to reply in a timely manner to the Restriction Requirement mailed 8 April 2004 ("outstanding Office action"), which set a shortened statutory period of reply of one (1) month. No reply was sent, and no extension of time under the provisions of 37 CFR 1.136(a) was obtained. The application thus became abandoned on 9 May 2004, as an operation of law, with notification mailed 7 January 2005.

The petition satisfies the conditions for revival pursuant to 37 CFR 1.137(b) by including (1) a reply in the form of a Response to the outstanding Office action, (2) a petition fee of $1620.00, and (3) a statement of unintentional delay. The reply to the outstanding Office action is accepted as having been unintentionally delayed.

It is not apparent whether the person signing the statement of unintentional delay was in a position to have firsthand or direct knowledge of the facts and circumstances of the delay at issue. Nevertheless, such statement is being treated as having been made as the result of a reasonable inquiry into the facts and circumstances of such delay. *See* 37 CFR 10.18(b) and Changes to Patent Practice and Procedure; Final Rule Notice, 62 Fed. Reg. 53131, 53178 (October 10, 1997), 1203 Off. Gaz. Pat. Office 63, 103 (October 21, 1997). In the event that date for the reply until the filing of a grantable petition pursuant to 37 CFR 1.137(b) was unintentional, petitioner must notify the Office.

Telephone inquiries relating to this decision should be directed to Robert DeWitty, Petitions Examiner, Office of Petitions (571-272-8427).

The application file will be referred to Technology Center Art Unit 2826 for further action on the filed Response.

Rajmesh Krishnamurthy

for David Bucci
Petitions Examiner
Office of Petitions

UNITED STATES PATENT AND TRADEMARK OFFICE

UNITED STATES DEPARTMENT OF COMMERCE
United States Patent and Trademark Office
Address: COMMISSIONER FOR PATENTS
P.O. Box 1450
Alexandria, Virginia 22313-1450
www.uspto.gov

| APPLICATION NO. | FILING DATE | FIRST NAMED INVENTOR | ATTORNEY DOCKET NO. | CONFIRMATION NO. |
|---|---|---|---|---|
| 10/420,703 | 04/23/2003 | Jimmy Rohit Gupta | 2916-0142P | 3813 |

29880 7590 09/29/2010
FOX ROTHSCHILD LLP
PRINCETON PIKE CORPORATE CENTER
997 LENOX DRIVE
BLDG. #3
LAWRENCEVILLE, NJ 08648

| EXAMINER |
|---|
| ZHONG, JUN FEI |

| ART UNIT | PAPER NUMBER |
|---|---|
| 2426 | |

| NOTIFICATION DATE | DELIVERY MODE |
|---|---|
| 09/29/2010 | ELECTRONIC |

**Please find below and/or attached an Office communication concerning this application or proceeding.**

The time period for reply, if any, is set in the attached communication.

Notice of the Office communication was sent electronically on above-indicated "Notification Date" to the following e-mail address(es):

ipdocket@foxrothschild.com

UNITED STATES PATENT AND TRADEMARK OFFICE

COMMISSIONER FOR PATENTS
UNITED STATES PATENT AND TRADEMARK OFFICE
WASHINGTON, D.C. 20231
www.uspto.gov

FOX ROTHSCHILD LLP
PRINCETON PIKE CORPORATE CENTER
997 LENOX DRIVE
BLDG. #3
LAWRENCEVILLE NJ 08648

MAILED

SEP 29 2010

DIRECTOR OFFICE
TECHNOLOGY CENTER 2400

| | | |
|---|---|---|
| In re Application of: | ) | |
| Jimmy Rohit Gupta | ) | |
| Application No.: 10/420,703 | ) | |
| Filed: April 23, 2003 | ) | **DECISION ON PETITION UNDER 37 C.F.R. э 1.84(a)(2) TO ACCEPT COLOR DRAWINGS** |
| For: **CROSS TABLE ANALYSIS DISPLAY** | ) | |

This is a decision on the petition under 37 C.F.R. 1.84(a)(2), filed April 23, 2003, requesting acceptance of color drawings

The petition is **GRANTED**.

## REGULATIONS AND PRACTICE

37 C.F.R. § 1.84(a)(2) states:

(2) *Color.* On rare occasions, color drawings may be necessary as the only practical medium by which to disclose the subject matter sought to be patented in a utility or design patent application or the subject matter of a statutory invention registration. The color drawings must be of sufficient quality such that all details in the drawings are reproducible in black and white in the printed patent. Color drawings are not permitted in international applications (see PCT Rule 11.13), or in an application, or copy thereof, submitted under the Office electronic filing system. The Office will accept color drawings in utility or design patent applications and statutory invention registrations only after granting a petition filed under this paragraph explaining why the color drawings are necessary. Any such petition must include the following:

(i) The fee set forth in § 1.17(h);

(ii) Three (3) sets of color drawings;

(iii) An amendment to the specification to insert (unless the specification contains or has been previously amended to contain) the following language as the first paragraph of the brief description of the drawings:

> The patent or application file contains at least one drawing executed in color. Copies of this patent or patent application publication with color drawing(s) will be provided by the Office upon request and payment of the necessary fee.

OG Notice 1348 OG 389 (Nov 24, 2009) - Legal Framework for Electronic Filing System - Web (EFS-Web) (21Oct2009) states:

> ...The requirement for three (3) sets of color drawings under 37 CFR 1.84(a)(2)(ii) is not applicable to color drawings submitted via EFS-Web. Therefore, only one set of such color drawings is necessary when filing via EFS-Web.

## DECISION

The petition, filed April 23, 2003 satisfies conditions (i)-(iii); condition (ii) is satisfied per OG Notice 1348 OG 389). Thus, the petition is **GRANTED**.

Any inquiry regarding this decision should be directed the undersigned whose telephone number is (571) 272-7294.

/Christopher Grant/

Christopher Grant, WQAS
Technology Center 2400
Network, Multiplexing, Cable and Security

Best Available Copy

## SPE RESPONSE FOR CERTIFICATE OF CORRECTION

DATE : 01-12-12

TO SPE OF : ART UNIT 3717

8070577 ARG

SUBJECT : Request for Certificate of Correction for Appl. No.: 10/420981 Patent No.: 8078577

CofC mailroom date: 01-05-12

Please respond to this request for a certificate of correction within 7 days.

**FOR IFW FILES:**

Please review the requested changes/corrections as shown in the **COCIN** document(s) in the IFW application image. No new matter should be introduced, nor should the scope or meaning of the claims be changed.

Please complete the response (see below) and forward the completed response to scanning using document code **COCX**.

**FOR PAPER FILES:**

Please review the requested changes/corrections as shown in the attached certificate of correction. Please complete this form (see below) and forward it with the file to:

Certificates of Correction Branch (CofC)
Randolph Square – 9D10-A
Palm Location 7580

Note: _____

_____

Angela Green 571.272.9005
CofC Branch 703-756-1814

**Thank You For Your Assistance**

**The request for issuing the above-identified correction(s) is hereby:**
Note your decision on the appropriate box.

- ☒ **Approved** — **All** changes apply.
- ☐ **Approved in Part** — Specify below which changes **do not** apply.
- ☐ **Denied** — State the reasons for denial below.

**Comments:** _____

SPE Melba Bumgarner Art Unit 3717 1/18/12

UNITED STATES PATENT AND TRADEMARK OFFICE

UNITED STATES DEPARTMENT OF COMMERCE
United States Patent and Trademark Office
Address: COMMISSIONER FOR PATENTS
P.O. Box 1450
Alexandria, Virginia 22313-1450
www.uspto.gov

| APPLICATION NO. | FILING DATE | FIRST NAMED INVENTOR | ATTORNEY DOCKET NO. | CONFIRMATION NO. |
|---|---|---|---|---|
| 10/421,515 | 04/22/2003 | Floyd A. Katske | 119174-010100 | 8688 |

96116 7590 12/22/2011
Steve Hassid, Silicon Edge Law Group LLP
1115 1/2 YALE STREET
SANTA MONICA, CA 90403

| EXAMINER |
|---|
| DAVIS, RUTH A |

| ART UNIT | PAPER NUMBER |
|---|---|
| 1651 | |

| NOTIFICATION DATE | DELIVERY MODE |
|---|---|
| 12/22/2011 | ELECTRONIC |

**Please find below and/or attached an Office communication concerning this application or proceeding.**

The time period for reply, if any, is set in the attached communication.

Notice of the Office communication was sent electronically on above-indicated "Notification Date" to the following e-mail address(es):

steve@siliconedgelaw.com
hassids@hotmail.com

UNITED STATES PATENT AND TRADEMARK OFFICE

COMMISSIONER FOR PATENTS
UNITED STATES PATENT AND TRADEMARK OFFICE
P.O. BOX 1450
ALEXANDRIA, VA 22313-1450
www.uspto.gov

**DATE:** December 14, 2011
**TO:** Certificates of Correction Branch
**FROM:** Michael G. Wityshyn
SPE, Art Unit 1651
**SUBJECT:** REQUEST FOR CERTIFICATE OF CORRECTION

Please issue a Certificate of Correction in U. S. Letters Patent No. 7,402,311 as specified on the attached Certificate.

Michael G. Wityshyn
Art Unit 1651

# UNITED STATES PATENT AND TRADEMARK OFFICE

## CERTIFICATE

Patent No. 7,402,311
Patented: July 22, 2008

On petition requesting issuance of a certificate for correction of inventorship pursuant to 35 U.S.C. 256, it has been found that the above identified patent, through error and without deceptive intent, improperly sets forth the inventorship. Accordingly, it is hereby certified that the correct inventorship of this patent is:

Floyd A. Katske
Daniel Shoskes
Allcides Rodriguez

Michael G. Wityshyn
Supervisory Patent Examiner
Art Unit 1651

UNITED STATES PATENT AND TRADEMARK OFFICE

COMMISSIONER FOR PATENTS
UNITED STATES PATENT AND TRADEMARK OFFICE
P.O. BOX 1450
ALEXANDRIA, VA 22313-1450
www.uspto.gov

| | |
|---|---|
| *In re* Patent No. 7,402,311<br>Issue Date: July 22, 2008<br>Appl No.: 10/421,515<br>Filed: April 22, 2003<br>For: COMPOSITION AND METHOD FOR TREATING NON-BACTERIAL CYSTITIS | **DECISION GRANTING PETITION**<br>*37 CFR 1.324* |

This is a decision on the petition filed June 16, 2009 to correct inventorship under 37 CFR 1.48(a) and 37 CFR 1.324.

The petition is granted.

The patented file is being forwarded to Certificate of Corrections Branch for issuance of a certificate naming only the actual inventor or inventors.

Michael G. Wityshyn
Supervisory Patent Examiner
Art Unit 1651
Technology Center 1600

STEVE HASSID
SILICON EDGE LAW GROUP LLP
1115 ½ YALE STREET
SANTA MONICA, CA 90403

UNITED STATES PATENT AND TRADEMARK OFFICE

Commissioner for Patents
United States Patent and Trademark Office
P.O. Box 1450
Alexandria, VA 22313-1450
www.uspto.gov

In re Patent No. 7135102
Issue Date: November 14,2006
Application No. 10421922
Filed: April 24,2003
Attorney Docket No. COE-553

:
:DECISION GRANTING PETITION
:UNDER 37 CFR 1.378(c)
:

This is a decision on the electronic petition, filed January 26,2012 ,under 37 CFR 1.378(c) to accept the unintentionally delayed payment of the 3.5 year maintenance fee for the above-identified patent.

The petition is **GRANTED**.

The maintenance fee is accepted, and the above-identified patent reinstated as of January 26,2012 . This decision also constitutes notice that the fee has been accepted. An electronic copy of the petition and this decision has been created as an entry in the Image File Wrapper. Nevertheless, petitioner should print and retain an independent copy.

Telephone inquiries related to this electronic decision should be directed to the Electronic Business Center at 1-866-217-9197.

UNITED STATES PATENT AND TRADEMARK OFFICE

Commissioner for Patents
United States Patent and Trademark Office
P.O. Box 1450
Alexandria, VA 22313-1450
www.uspto.gov

GARLICK HARRISON & MARKISON
P.O. BOX 160727
AUSTIN TX 78716-0727

**MAILED**

JUN 10 2011

**OFFICE OF PETITIONS**

In re Application of
Manu Gulati
Application Number: 10/421,988
Filing or 371(c) Date: 04/23/2003
Attorney Docket Number: BP2112.6

DECISION ON PETITIONS
UNDER 37 CFR 1.78(a)(3) AND (a)(6)

This is a decision on the petition filed on March 30, 2011, which is treated as renewed petitions under 37 CFR §§ 1.78(a)(3) and 1.78(a)(6), to accept an unintentionally delayed claim under 35 U.S.C. §§120 and 119(e) for the benefit of the prior-filed applications set forth in an Application Data Sheet (ADS).

The petitions are **GRANTED.**

A petition for acceptance of a claim for late priority under 37 CFR §§ 1.78(a)(3) and 1.78(a)(6) is only applicable to those applications filed on or after November 29, 2000. Further, the petition is appropriate only after the expiration of the period specified in 37 CFR §§ 1.78(a)(2)(ii) and 1.78(a)(5)(ii). In addition, the petition under 37 CFR §§ 1.78(a)(3) and 1.78(a)(6) must be accompanied by:

**(1)** the reference required by 35 U.S.C. §§ 120 and 119(e) and 37 CFR §§ 1.78(a)(2)(i) and 1.78(a)(5)(i) of the prior-filed application, unless previously submitted;
**(2)** the surcharge set forth in § 1.17(t); and
**(3)** a statement that the entire delay between the date the claim was due under 37 CFR §§ 1.78(a)(2)(ii) and 1.78(a)(5)(ii) and the date the claim was filed was unintentional. The Director may require additional information where there is a question whether the delay was unintentional.

Additionally, the instant nonprovisional application must be pending at the time of filing of the reference to the prior-filed provisional application as required by 37 CFR 1.78(a)(5)(ii). Further, the nonprovisional or international applications claiming the benefit of the prior-filed provisional application must have been filed within twelve months of the filing date of the prior-filed provisional applications.

All the above requirements having been satisfied, the late claim for benefit of priority under 35 U.S.C. §§ 120, 365(c), and 119(e) is accepted as being unintentionally delayed.

Receipt of the ADS filed on June 1, 2011 is acknowledged.

***The granting of the petition to accept the delayed benefit claim to the prior-filed applications under 37 CFR §§ 1.78(a)(3) and 1.78(a)(6) should not be construed as meaning that this application is entitled to the benefit of the filing date of the prior-filed applications. In order for this application to be entitled to the benefit of the prior-filed applications, all other requirements under 35 U.S.C. §§120 and 1.78(a)(1) and (a)(2) and under 35 U.S.C. §119(e) and 37 CFR 1.78(a)(4) and (a)(5) must be met. Similarly, the fact that the corrected Filing Receipt accompanying this decision on petition includes the prior-filed applications should not be construed as meaning that applicant is entitled to the claim for benefit of priority to the prior-filed applications noted thereon. Accordingly, the examiner will, in due course, consider this benefit claim and determine whether the application is entitled to the benefit of the earlier filing date.***

A corrected Filing Receipt, which includes the priority claim to the prior-filed applications, accompanies this decision on petition.

Any questions concerning this matter may be directed to Senior Petitions Attorney Douglas I. Wood at (571) 272-3231. All other inquiries concerning either the examination procedures or status of the application should be directed to the Technology Center.

This application is being forwarded to the Technology Center Art Unit 2457 for consideration by the examiner of the claim under 35 U.S.C. §§120 and 119(e) of the prior-filed nonprovisional and provisional applications. Thereafter, the application will be referred to the Office of Data Management for processing into a patent.

Christopher Bottorff
Supervisor
Office of Petitions

**ATTACHMENT** : Corrected Filing Receipt

UNITED STATES PATENT AND TRADEMARK OFFICE

UNITED STATES DEPARTMENT OF COMMERCE
United States Patent and Trademark Office
Address: COMMISSIONER FOR PATENTS
P.O. Box 1450
Alexandria, Virginia 22313-1450
www.uspto.gov

| APPLICATION NUMBER | FILING or 371(c) DATE | GRP ART UNIT | FIL FEE REC'D | ATTY.DOCKET.NO | TOT CLAIMS | IND CLAIMS |
|---|---|---|---|---|---|---|
| 10/421,988 | 04/23/2003 | 2457 | 2478 | BP2112.6 | 58 | 6 |

**CONFIRMATION NO. 5820**

**CORRECTED FILING RECEIPT**

51472
GARLICK HARRISON & MARKISON
P.O. BOX 160727
AUSTIN, TX 78716-0727

OC000000048088605

Date Mailed: 06/10/2011

Receipt is acknowledged of this non-provisional patent application. The application will be taken up for examination in due course. Applicant will be notified as to the results of the examination. Any correspondence concerning the application must include the following identification information: the U.S. APPLICATION NUMBER, FILING DATE, NAME OF APPLICANT, and TITLE OF INVENTION. Fees transmitted by check or draft are subject to collection. Please verify the accuracy of the data presented on this receipt. **If an error is noted on this Filing Receipt, please submit a written request for a Filing Receipt Correction. Please provide a copy of this Filing Receipt with the changes noted thereon. If you received a "Notice to File Missing Parts" for this application, please submit any corrections to this Filing Receipt with your reply to the Notice. When the USPTO processes the reply to the Notice, the USPTO will generate another Filing Receipt incorporating the requested corrections**

**Applicant(s)**

Manu Gulati, Santa Clara, CA;

**Power of Attorney:** The patent practitioners associated with Customer Number 51472

**Domestic Priority data as claimed by applicant**

This application is a CIP of 10/356,324 01/31/2003 PAT 7,346,078
which claims benefit of 60/380,740 05/15/2002
and claims benefit of 60/419,031 10/16/2002 ABN

**Foreign Applications** (You may be eligible to benefit from the **Patent Prosecution Highway** program at the USPTO. Please see http://www.uspto.gov for more information.)

**If Required, Foreign Filing License Granted:** 06/25/2003

The country code and number of your priority application, to be used for filing abroad under the Paris Convention, is **US 10/421,988**

**Projected Publication Date:** Not Applicable

**Non-Publication Request:** No

**Early Publication Request:** No

**Title**

SMART ROUTING BETWEEN PEERS IN A POINT-TO-POINT LINK BASED SYSTEM

**Preliminary Class**

709

## PROTECTING YOUR INVENTION OUTSIDE THE UNITED STATES

Since the rights granted by a U.S. patent extend only throughout the territory of the United States and have no effect in a foreign country, an inventor who wishes patent protection in another country must apply for a patent in a specific country or in regional patent offices. Applicants may wish to consider the filing of an international application under the Patent Cooperation Treaty (PCT). An international (PCT) application generally has the same effect as a regular national patent application in each PCT-member country. The PCT process **simplifies** the filing of patent applications on the same invention in member countries, but **does not result** in a grant of "an international patent" and does not eliminate the need of applicants to file additional documents and fees in countries where patent protection is desired.

Almost every country has its own patent law, and a person desiring a patent in a particular country must make an application for patent in that country in accordance with its particular laws. Since the laws of many countries differ in various respects from the patent law of the United States, applicants are advised to seek guidance from specific foreign countries to ensure that patent rights are not lost prematurely.

Applicants also are advised that in the case of inventions made in the United States, the Director of the USPTO must issue a license before applicants can apply for a patent in a foreign country. The filing of a U.S. patent application serves as a request for a foreign filing license. The application's filing receipt contains further information and guidance as to the status of applicant's license for foreign filing.

Applicants may wish to consult the USPTO booklet, "General Information Concerning Patents" (specifically, the section entitled "Treaties and Foreign Patents") for more information on timeframes and deadlines for filing foreign patent applications. The guide is available either by contacting the USPTO Contact Center at 800-786-9199, or it can be viewed on the USPTO website at http://www.uspto.gov/web/offices/pac/doc/general/index.html.

For information on preventing theft of your intellectual property (patents, trademarks and copyrights), you may wish to consult the U.S. Government website, http://www.stopfakes.gov. Part of a Department of Commerce initiative, this website includes self-help "toolkits" giving innovators guidance on how to protect intellectual property in specific countries such as China, Korea and Mexico. For questions regarding patent enforcement issues, applicants may call the U.S. Government hotline at 1-866-999-HALT (1-866-999-4158).

## LICENSE FOR FOREIGN FILING UNDER

## Title 35, United States Code, Section 184

## Title 37, Code of Federal Regulations, 5.11 & 5.15

**GRANTED**

The applicant has been granted a license under 35 U.S.C. 184, if the phrase "IF REQUIRED, FOREIGN FILING LICENSE GRANTED" followed by a date appears on this form. Such licenses are issued in all applications where the conditions for issuance of a license have been met, regardless of whether or not a license may be required as

set forth in 37 CFR 5.15. The scope and limitations of this license are set forth in 37 CFR 5.15(a) unless an earlier license has been issued under 37 CFR 5.15(b). The license is subject to revocation upon written notification. The date indicated is the effective date of the license, unless an earlier license of similar scope has been granted under 37 CFR 5.13 or 5.14.

This license is to be retained by the licensee and may be used at any time on or after the effective date thereof unless it is revoked. This license is automatically transferred to any related applications(s) filed under 37 CFR 1.53(d). This license is not retroactive.

The grant of a license does not in any way lessen the responsibility of a licensee for the security of the subject matter as imposed by any Government contract or the provisions of existing laws relating to espionage and the national security or the export of technical data. Licensees should apprise themselves of current regulations especially with respect to certain countries, of other agencies, particularly the Office of Defense Trade Controls, Department of State (with respect to Arms, Munitions and Implements of War (22 CFR 121-128)); the Bureau of Industry and Security, Department of Commerce (15 CFR parts 730-774); the Office of Foreign AssetsControl, Department of Treasury (31 CFR Parts 500+) and the Department of Energy.

**NOT GRANTED**

No license under 35 U.S.C. 184 has been granted at this time, if the phrase "IF REQUIRED, FOREIGN FILING LICENSE GRANTED" DOES NOT appear on this form. Applicant may still petition for a license under 37 CFR 5.12, if a license is desired before the expiration of 6 months from the filing date of the application. If 6 months has lapsed from the filing date of this application and the licensee has not received any indication of a secrecy order under 35 U.S.C. 181, the licensee may foreign file the application pursuant to 37 CFR 5.15(b).

PTO/SB/66 (03-09)
Approved for use through 03/31/2012. OMB 0651-0016
U.S. Patent and Trademark Office: U.S. DEPARTMENT OF COMMERCE
Under the Paperwork Reduction Act of 1995, no persons are required to respond to a collection of information unless it displays valid OMB control number.

# PETITION TO ACCEPT UNINTENTIONALLY DELAYED PAYMENT OF MAINTENANCE FEE IN AN EXPIRED PATENT (37 CFR 1.378(c))

| Patent Number | Issue Date (YYYY-MM-DD) | Application Number | Filing Date (YYYY-MM-DD) | Docket Number (if applicable) |
|---|---|---|---|---|
| 6991105 | 2006-01-31 | 10/422,481 | 2003-04-24 | SWIN:1015 |

CAUTION: Maintenance fee (and surcharge, if any) payment must correctly identify: (1) the patent number and (2) the application number of the actual U.S. application leading to issuance of that patent to ensure the fee(s) is/are associated with the correct patent. 37 CFR 1.366(c) and (d).

SMALL ENTITY
☒ Patentee claims, or has previously claimed, small entity status. See 37 CFR 1.27.

LOSS OF ENTITLEMENT TO SMALL ENTITY STATUS
☐ Patentee is no longer entitled to small entity status. See 37 CFR 1.27(g)

| NOT Small Entity | Fee | Code | Small Entity | Fee | Code |
|---|---|---|---|---|---|
| ○ | 3 ½ year | (1551) | ◉ | 3 ½ year | (2551) |
| ○ | 7 ½ year | (1552) | ○ | 7 ½ year | (2552) |
| ○ | 11 ½ year | (1553) | ○ | 11 ½ year | (2553) |

SURCHARGE
The surcharge required by 37 CFR 1.20(i)(2) (Fee Code 1558) must be paid as a condition of accepting unintentionally delayed payment of the maintenance fee.

MAINTENANCE FEE (37 CFR 1.20(e)-(g))
The appropriate maintenance fee must be submitted with this petition.

STATEMENT
THE UNDERSIGNED CERTIFIES THAT THE DELAY IN PAYMENT OF THE MAINTENANCE FEE TO THIS PATENT WAS UNINTENTIONAL

PETITIONER(S) REQUEST THAT THE DELAYED PAYMENT OF THE MAINTENANCE FEE BE ACCEPTED AND THE PATENT REINSTATED

THIS PORTION MUST BE COMPLETED BY THE SIGNATORY OR SIGNATORIES

37 CFR 1.378(d) states: "Any petition under this section must be signed by an attorney or agent registered to practice before the Patent and Trademark Office, or by the patentee, the assignee, or other party in interest."

I certify, in accordance with 37 CFR 1.4(d)(4) that I am

◉ An attorney or agent registered to practice before the Patent and Trademark Office

○ A sole patentee

○ A joint patentee; I certify that I am authorized to sign this submission on behalf of all the other patentees.

○ A joint patentee; all of whom are signing this e-petition

○ The assignee of record of the entire interest

Under the Paperwork Reduction Act of 1995, no persons are required to respond to a collection of information unless it displays valid OMB control number.

| Patent Practitioner | | | |
|---|---|---|---|
| A signature of the applicant or representative is required in accordance with 37 CFR 1.33 and 10.18. Please see 37 CFR 1.4(d) for the form of the signature | | | |
| Signature | /Chainey P. Singleton/ | Date (YYYY-MM-DD) | 2011-04-29 |
| Name | Chainey P. Singleton | Registration Number | 53598 |

This collection of information is required by 37 CFR 1.378(c). The information is required to obtain or retain a benefit by the public which is to file (and by the USPTO to process) an application. Confidentiality is governed by 35 U.S.C. 122 and 37 CFR 1.11 and 1.14. This collection is estimated to take 1 hour to complete, including gathering, preparing, and submitting the completed application form to the USPTO. Time will vary depending upon the individual case. Any comments on the amount of time you require to complete this form and/ or suggestions for reducing this burden, should be sent to the Chief Information Officer, U.S. Patent and Trademark Office, U.S. Department of Commerce, P.O. Box 1450, Alexandria, VA 22313-1450. DO NOT SEND FEES OR COMPLETED FORMS TO THIS ADDRESS. **This form can only be used when in conjunction with EFS-Web. If this form is mailed to the USPTO, it may cause delays in reinstating the patent.**

# Privacy Act Statement

The Privacy Act of 1974 (P.L. 93-579) requires that you be given certain information in connection with your submission of the attached form related to a patent application or patent. Accordingly, pursuant to the requirements of the Act, please be advised that: (1) the general authority for the collection of this information is 35 U.S.C. 2(b)(2); (2) furnishing of the information solicited is voluntary; and (3) the principal purpose for which the information is used by the U.S. Patent and Trademark Office is to process and/or examine your submission related to a patent application or patent. If you do not furnish the requested information, the U.S. Patent and Trademark Office may not be able to process and/or examine your submission, which may result in termination of proceedings or abandonment of the application or expiration of the patent.

The information provided by you in this form will be subject to the following routine uses:

1. The information on this form will be treated confidentially to the extent allowed under the Freedom of Information Act (5 U.S.C. 552) and the Privacy Act (5 U.S.C. 552a). Records from this system of records may be disclosed to the Department of Justice to determine whether the Freedom of Information Act requires disclosure of these records.

2. A record from this system of records may be disclosed, as a routine use, in the course of presenting evidence to a court, magistrate, or administrative tribunal, including disclosures to opposing counsel in the course of settlement negotiations.

3. A record in this system of records may be disclosed, as a routine use, to a Member of Congress submitting a request involving an individual, to whom the record pertains, when the individual has requested assistance from the Member with respect to the subject matter of the record.

4. A record in this system of records may be disclosed, as a routine use, to a contractor of the Agency having need for the information in order to perform a contract. Recipients of information shall be required to comply with the requirements of the Privacy Act of 1974, as amended, pursuant to 5 U.S.C. 552a(m).

5. A record related to an International Application filed under the Patent Cooperation Treaty in this system of records may be disclosed, as a routine use, to the International Bureau of the World Intellectual Property Organization, pursuant to the Patent Cooperation Treaty.

6. A record in this system of records may be disclosed, as a routine use, to another federal agency for purposes of National Security review (35 U.S.C. 181) and for review pursuant to the Atomic Energy Act (42 U.S.C. 218(c)).

7. A record from this system of records may be disclosed, as a routine use, to the Administrator, General Services, or his/her designee, during an inspection of records conducted by GSA as part of that agency's responsibility to recommend improvements in records management practices and programs, under authority of 44 U.S.C. 2904 and 2906. Such disclosure shall be made in accordance with the GSA regulations governing inspection of records for this purpose, and any other relevant (i.e., GSA or Commerce) directive. Such disclosure shall not be used to make determinations about individuals.

8. A record from this system of records may be disclosed, as a routine use, to the public after either publication of the application pursuant to 35 U.S.C. 122(b) or issuance of a patent pursuant to 35 U.S.C. 151. Further, a record may be disclosed, subject to the limitations of 37 CFR 1.14, as a routine use, to the public if the record was filed in an application which became abandoned or in which the proceedings were terminated and which application is referenced by either a published application, an application open to public inspections or an issued patent.

9. A record from this system of records may be disclosed, as a routine use, to a Federal, State, or local law enforcement agency, if the USPTO becomes aware of a violation or potential violation of law or regulation.

UNITED STATES PATENT AND TRADEMARK OFFICE

Commissioner for Patents
United States Patent and Trademark Office
P.O. Box 1450
Alexandria, VA 22313-1450
www.uspto.gov

In re Patent No. 6991105
Issue Date: January 31,2006
Application No. 10422481
Filed: April 24,2003
Attorney Docket No. 0120092.01018

:
:DECISION GRANTING PETITION
:UNDER 37 CFR 1.378(c)
:

This is a decision on the electronic petition, filed April 29,2011 ,under 37 CFR 1.378(c) to accept the unintentionally delayed payment of the 3.5 year maintenance fee for the above-identified patent.

The petition is **GRANTED**.

The maintenance fee is accepted, and the above-identified patent reinstated as of April 29,2011 .
This decision also constitutes notice that the fee has been accepted. An electronic copy of the petition and this decision has been created as an entry in the Image File Wrapper. Nevertheless, petitioner should print and retain an independent copy.

Telephone inquiries related to this electronic decision should be directed to the Electronic Business Center at 1-866-217-9197.

UNITED STATES PATENT AND TRADEMARK OFFICE

Commissioner for Patents
United States Patent and Trademark Office
P.O. Box 1450
Alexandria, VA 22313-1450
www.uspto.gov

LAUSON & TARVER LLP
880 APOLLO STREET
SUITE 301
EL SEGUNDO CA 90245

**MAILED**

**DEC 16 2010**

**OFFICE OF PETITIONS**

| | | |
|---|---|---|
| In re Application of | : | |
| Galves, et al. | : | |
| Application No. 10/422,612 | : | ON PETITION |
| Filed: April 23, 2003 | : | |
| Attorney Docket No. 09-18022 | : | |

This is a decision on the petition under 37 CFR 1.137(b), filed November 16, 2010, to revive the above-identified application.

The petition under 37 CFR 1.137(b) is **DISMISSED**.

Any request for reconsideration of this decision must be submitted within TWO (2) MONTHS from the mail date of this decision. Extensions of time under 37 CFR 1.136(a) are permitted. The reconsideration request should include a cover letter entitled "Renewed Petition Under 37 CFR 1.137(b)." This is **not** a final agency decision within the meaning of 5 USC 704. No additional petition fee is due on renewed petition.

The above-identified application became abandoned for failure to timely file a reply to the "Notice Requiring Excess Claims Fees", mailed February 5, 2009. This Notice set an extendable period for reply of one month. No fees having been received, the application became abandoned on March 6, 2009. The Office mailed a Notice of Abandonment on May 19, 2010.

A grantable petition under 37 CFR 1.137(b) must be accompanied by: (1) the required reply, unless previously filed; (2) the petition fee as set forth in 37 CFR 1.17(m); (3) a statement that the entire delay in filing the required reply from the due date

for the reply until the filing of a grantable petition pursuant to 37 CFR 1.137(b) was unintentional; and (4) any terminal disclaimer (and fee as set forth in 37 CFR 1.20(d)) required by 37 CFR 1.137(d).

The instant petition lacks item (1), the required reply. Petitioner has not submitted the appropriate excess claims fees as required by the February 5, 2009 Notice.

Further correspondence with respect to this matter should be addressed as follows:

By mail: Mail Stop Petitions
Commissioner for Patents
P.O. Box 1450
Alexandria VA 22313-1450

By FAX: (571)273-8300
Attn: Office of Petitions

Telephone inquiries concerning this decision should be directed to the undersigned at (571)272-3207.

Cliff Congo
Petitions Attorney
Office of Petitions

UNITED STATES PATENT AND TRADEMARK OFFICE

Commissioner for Patents
United States Patent and Trademark Office
P.O. Box 1450
Alexandria, VA 22313-1450
www.uspto.gov

LAUSON & TARVER LLP
880 APOLLO STREET
SUITE 301
EL SEGUNDO CA 90245

**MAILED**

MAR 21 2011

**OFFICE OF PETITIONS**

| | | |
|---|---|---|
| In re Application of | : | |
| Galves, et al. | : | |
| Application No. 10/422,612 | : | ON PETITION |
| Filed: April 23, 2003 | : | |
| Attorney Docket No. 09-18022 | : | |

This is a decision on the renewed petition under 37 CFR 1.137(b), filed February 7, 2011, to revive the above-identified application.

The petition under 37 CFR 1.137(b) is **GRANTED**.

The above-identified application became abandoned for failure to timely file a reply to the "Notice Requiring Excess Claims Fees", mailed February 5, 2009. This Notice set an extendable period for reply of one month. No fees having been received, the application became abandoned on March 6, 2009. The Office mailed a Notice of Abandonment on May 19, 2010. Applicants filed a petition to revive under 37 CFR 1.137(b) on November 16, 2010. However, the petition was dismissed in a decision mailed on December 16, 2010. The petition was dismissed because applicants did not submit the excess claims fee.

With the instant petition, applicants have paid the petition fee, made the proper statement of unintentional delay, and submitted the required reply in the form of an Amendment cancelling the excess claims.

The application is being forwarded to Group Art Unit 3694 for consideration of the Amendment, filed February 7, 2011.

Telephone inquiries concerning this decision should be directed to the undersigned at (571)272-3207.

Cliff Congo
Petitions Attorney
Office of Petitions

UNITED STATES PATENT AND TRADEMARK OFFICE

Commissioner for Patents
United States Patent and Trademark Office
P.O. Box 1450
Alexandria, VA 22313-1450
www.uspto.gov

OCT 01 2010

ERIC B. MEYERTONS
MEYERTONS, HOOD, KIVLIN, KOWERT & GOETZEL, P.C.
P.O. BOX 398
AUSTIN, TX 78767-0398

*In re* Application of Wahlbin, Stefan
Appl. No.:10/422,632
Filed: September 2, 2003
For: GRAPHICAL INPUT DISPLAY IN AN INSURANCE PROCESSING SYSTEM

**RESPONSE TO PETITION UNDER 37 CFR 1.59**

This is a decision on the petition under 37 CFR 1.59(b), filed November 18, 2008, to expunge information from the above identified application.

The petition is **GRANTED**.

Petitioner requests that information in the sealed box label "CSC Trade Secret and/or Proprietary Manuals" material documents (TS1-TS126) filed November 18, 2008, specifically, the contents listed on the attached "List of TRADE SECRET and/or PROPRIETARY References", be expunged from the record.

A petition under 37 CFR 1.59(b) must contain:

(A) a clear identification of the information to be expunged without disclosure of the details thereof;
(B) a clear statement that the information to be expunged is trade secret material, proprietary material, and/or subject to a protective order, and that the information has not been otherwise made public;
(C) a commitment on the part of the petitioner to retain such information for the period of any patent with regard to which such information is submitted;
(D) a statement that the petition to expunge is being submitted by, or on behalf of, the party in interest who originally submitted the information;
(E) the fee as set forth in 37 CFR 1.17(g) for a petition under 37 CFR 1.59(b)

The information in question has been determined by the undersigned to not be material to the examination of the instant application.

As the above conditions have been met, the requested material has been expunged. However, the material will not be returned to the applicants. The obligation to return documents was removed from 37 CFR 1.59 (June 30, 2003 Fed Register, Vol. 68, No. 125, 38613). The documents have been closed from the IFW record so as not to be viewable by non-PTO personnel. This decision only applies to this application, and any other applications containing the proprietary information will need to be separately decided.

Applicant is required to retain the expunged material(s) for the life of any patent which issues on the above-identified application.

Any questions regarding this decision should be directed to Supervisory Patent Examiner Robert Morgan at (571) 272-6773.

Wynn Coggins, Director
Patent Technology Center 3600
(571) 272-5350

RM: 9/20/10

## SPE RESPONSE FOR CERTIFICATE OF CORRECTION

**Paper No.:** _____

**DATE** : 08/31/10

**TO SPE OF** : ART UNIT 2613

**SUBJECT** : Request for Certificate of Correction for Appl. No.: 10422920 Patent No.: 7426346

Please respond to this request for a certificate of correction within 7 days.

**FOR IFW FILES:**

Please review the requested changes/corrections as shown in the **COCIN** document(s) in the IFW application image. No new matter should be introduced, nor should the scope or meaning of the claims be changed.

Please complete the response (see below) and forward the completed response to scanning using document code **COCX**.

**FOR PAPER FILES:**

Please review the requested changes/corrections as shown in the attached certificate of correction. Please complete this form (see below) and forward it with the file to:

**Certificates of Correction Branch (C of C)**
**Randolph Square 9D40-D**
**Palm Location 7580**

**You can fax the Directors/SPE response to 571-270-9990**

Lamonte Newsome
**Certificates of Correction Branch**
**703-756-1574**

**Thank You For Your Assistance**

---

**The request for issuing the above-identified correction(s) is hereby:**
Note your decision on the appropriate box.

| | |
|---|---|
| **XApproved** | **All** changes apply. |
| ☐ **Approved in Part** | Specify below which changes **do not** apply. |
| ☐ **Denied** | State the reasons for denial below. |

**Comments:** _____

/Kenneth Vanderpuye/ _2613_____

SPE RESPONSE FOR CERTIFICATE OF CORRECTION

SPE Art Unit

UNITED STATES PATENT AND TRADEMARK OFFICE

Commissioner for Patents
United States Patent and Trademark Office
P.O. Box 1450
Alexandria, VA 22313-1450
www.uspto.gov

&L Gates LLP
STATE STREET FINANCIAL CENTER
One Lincoln Street
BOSTON MA 02111-2950

MAILED
MAY 20 2011
OFFICE OF PETITIONS

| | | |
|---|---|---|
| In re Application of | : | |
| Michael Atlas | : | |
| Application No. 10/423016 | : | |
| Filing or 371(c) Date: 04/25/2003 | : | ON PETITION |
| Pat. Num./Pub. Num: 7241286 | : | |
| Issue Date: 07/10/2007 | : | |
| Attorney Docket Number: LLI-010 | : | |

This is a notice regarding request for acceptance of a fee deficiency submission under 37 CFR 1.28. On September 1, 1998, the Court of Appeals for the Federal Circuit held that 37 CFR 1.28(c) is the sole provision governing the time for correction of the erroneous payment of the issue fee as a small entity. **See DH Technology v. Synergystex International, Inc. 154 F.3d 1333, 47 USPQ2d 1865 (Fed. Cir. Sept. 1, 1998).**

The Office no longer investigates or rejects original or reissue applications under 37 CFR 1.56. **1098 Off. Gaz. Pat. Office 502 (January 3, 1989).** Therefore, nothing in this Notice is intended to imply that an investigation was done.

Your fee deficiency submission under 37 CFR 1.28 is hereby **ACCEPTED**.

This application is no longer entitled to small entity status. Accordingly, all future fees paid in this application must be paid at the large entity rate.

Telephone inquiries concerning this matter should be directed to the undersigned at (571) 272-3232.

/DLW/

Derek L. Woods
Attorney
Office of Petitions

UNITED STATES PATENT AND TRADEMARK OFFICE

COMMISSIONER FOR PATENTS
UNITED STATES PATENT AND TRADEMARK OFFICE
P.O. BOX 1450
ALEXANDRIA, VA 22313-1450
www.uspto.gov

FOLEY & LARDNER LLP
150 EAST GILMAN STREET
P.O. BOX 1497
MADISON WI 53701-1497

MAILED

SEP 27 2010

OFFICE OF PETITIONS

In re Application
Gross, et al.
Application No. 10/423,203
Filing or 371(c) Date: April 25, 2003
Dkt. No.: 088245-6669

: PATENT TERM ADJUSTMENT

This is in response to the application for patent term adjustment under 37 CFR 1.705(b), filed September 13, 2010.

Applicant submits that the correct patent term adjustment to be indicated on the patent is 540 days, not 360 days as calculated by the Office as of the mailing of the initial determination of patent term adjustment. Applicant requests this correction on the basis that the Office will take in excess of three years to issue this patent.

Insofar as the instant application for patent term adjustment requests reconsideration of the patent term adjustment as it relates to the Office's failure to issue the patent within 3 years of the filing date, the application for patent term adjustment under 37 CFR 1.705(b) is DISMISSED as PREMATURE.

Knowledge of the actual date the patent issues is required to calculate the amount, if any, of additional patent term patentee is entitled to for Office failure to issue the patent within 3 years. See, § 1.702(b). (This is true even where a request for continued examination (RCE) was filed). The computer will not undertake the § 1.702(b) calculation until the actual date of issuance of the patent has been determined. Likewise, the computer will not calculate any further Office delay under § 1.702(a)(4) or applicant delay under § 1.704(c)(10) until the actual date of issuance of the patent has been determined. As such, the Office can not make a determination on the correctness of the patent term adjustment until the patent has issued.

Requesting reconsideration of the patent term adjustment to be indicated on the patent based on the initial determination of patent term adjustment and a projected issuance date of the patent (or even the filing date of the request for continued examination) is premature. Accordingly, it is appropriate to dismiss as premature such a request.

Applicant is advised that they may wait until the time of the issuance of the patent and file a request for reconsideration of the patent term adjustment pursuant to 37 CFR 1.705(d). As the USPTO does not calculate the amount of time earned pursuant to 37 CFR 1.702(b) until the time

of the issuance of the patent, the Office will consider any request for reconsideration of the patent term adjustment due to an error in the calculation of 37 CFR 1.702(b) to be timely if the request for reconsideration is filed within two months of the issuance of the patent. However, as to all other bases for contesting the initial determination of patent term adjustment received with the notice of allowance, applicant must timely file an application for patent term adjustment prior to the payment of the issue fee[1].

Receipt is hereby acknowledged of the required patent term adjustment application fee under 37 CFR 1.705(b) of $200.00. See, 37 CFR 1.18(e). As the submission of the fee is required for reconsideration of the patent term adjustment, the request for refund is hereby DISMISSED.

Any request for reconsideration of the patent term adjustment indicated on the patent must be timely filed within 2 months after issuance pursuant to 37 CFR 1.705(d) and **must** include payment of the required fee under 37 CFR 1.18(e).

The application file is being forwarded to the Office of Data Management for issuance of the patent. The patent term adjustment indicated on the patent (as shown on the Issue Notification mailed about three weeks prior to patent issuance) will include any additional adjustment accrued both for Office delay in issuing the patent more than four months after payment of the issue fee and satisfaction of all outstanding requirements, and for the Office taking in excess of three years to issue the patent (to the extent that the three-year period does not overlap with periods already accorded).

Telephone inquiries specific to this decision should be directed to the undersigned at (571) 272-3205.

*/ALESIA M. BROWN/*

Alesia M. Brown
Petitions Attorney
Office of Petitions

---

[1] For example, if applicant disputes both the calculation of patent term adjustment under 37 CFR 1.702(a)(1) for Office failure to mail a first Office action or notice of allowance not later than fourteen months after the date on which the application was filed and under 37 CFR 1.702(b) for Office failure to issue a patent within three years of the actual filing date of the application, then applicant must still timely file an application for patent term adjustment prior to the payment of the issue fee to contest the calculation of Office delay in issuing a first Office action or notice of allowance. See 37 CFR 1.705(b) and 35 U.S.C. 154(b)(3)(B). A dispute as to the calculation of the §1.702(a)(1) period raised on request for reconsideration of patent term adjustment under 37 CFR 1.705(d) will be dismissed as untimely filed.

UNITED STATES PATENT AND TRADEMARK OFFICE

Commissioner for Patents
United States Patent and Trademark Office
P.O. Box 1450
Alexandria, VA 22313-1450
www.uspto.gov

MAILED

SEP 09 2010

OFFICE OF PETITIONS

HAVERSTOCK & OWENS LLP
162 N WOLFE ROAD
SUNNYVALE, CA 94086

| | | |
|---|---|---|
| In re Application of Stamatatos et al. | : | |
| Application No. 10/423,271 | : | Decision on Petition |
| Filing Date: April 25, 2003 | : | |
| Attorney Docket No. ALED-00101 | : | |

This is a decision on the petition under 37 CFR 1.181 filed April 9, 2010, requesting the Office withdraw the holding of abandonment.[1]

The petition is **granted.**

The Office mailed a final Office action on August 3, 2009. The Office did not receive a reply to the final Office action. As a result, the Office mailed a Notice of Abandonment on February 23, 2010. The instant petition was filed April 9, 2010.

The petition asserts the final Office action was not received.

A review of the record indicates the record is sufficient to establish non-receipt of the final Office action. Therefore, the Notice of Abandonment the holding of abandonment are withdrawn.

Technology Center Art Unit 2885 will be informed of the instant decision and the request for continued examination and amendment filed April 9, 2010, will be examined in due course.

Telephone inquiries regarding this communication should be directed to Petitions Attorney Steven Brantley at (571) 272-3203.

Charles Steven Brantley
Senior Petitions Attorney
Office of Petitions

[1] The petition indicates the petition is being filed in the alternative under 37 CFR 1.137(a) and 37 CFR 1.137(b). However, in view of the fact this decision grants the petition under 37 CFR 1.181, the Office need not evaluate the petition under the provisions of 37 CFR 1.137(a) or 37 CFR 1.137(b).

UNITED STATES PATENT AND TRADEMARK OFFICE

Commissioner for Patents
United States Patent and Trademark Office
P.O. Box 1450
Alexandria, VA 22313-1450
www.uspto.gov

MAILED

AUG 03 2010

OFFICE OF PETITIONS

GILEAD SCIENCES INC
333 LAKESIDE DR
FOSTER CITY CA 94404

| | | |
|---|---|---|
| In re Patent No. 7,649,015 | : | DECISION ON REQUEST |
| Arimilli, et al. | : | FOR |
| Issue Date: January 19, 2010 | : | RECONSIDERATION OF |
| Application No. 10/423,496 | : | PATENT TERM ADJUSTMENT |
| Filed: April 25, 2003 | : | and |
| Atty Docket No. 257.P2C | : | NOTICE OF INTENT TO ISSUE |
| | : | CERTIFICATE OF CORRECTION |

This is a decision on the petition filed on January 21, 2010, which is being treated as a petition under 37 CFR 1.705(d) requesting that the patent term adjustment indicated on the above-identified patent be corrected to indicate that the term of the above-identified patent is extended or adjusted by one thousand, three hundred and eighty-one (1,381) days.

The petition to correct the patent term adjustment indicated on the above-identified patent to indicate that the term of the above-identified patent is extended or adjusted by one thousand, two hundred and fifty-four (1,254) days is **GRANTED to the extent indicated herein.**

As the period from the filing date of the request for continued examination (RCE) to the issue date of the patent is not included in the "B" delay period, the over three year period begins on April 26, 2006, and ends on February 2, 2009, the day before the RCE was filed, and is 1014 (not 1015) days. See 35 U.S.C. 154(b)(1)(B)(i).

It is noted that patentees failed to account for the filing of the notice of appeal on September 29, 2008. The Office reminds patentees that the period consumed by appellate review, whether successful or not, is excluded from the calculation of B delay. See 35 U.S.C. 154(b)(1)(B)(ii). In this instance, the period

consumed by appellate review is 126 days, beginning on the date on which the notice of appeal to the Board of Patent Appeals and Interferences was filed, September 29, 2008, and ending on the day before the Request for Continued Examination was filed, February 2, 2009. Thus, the B delay is 888 days (1014 - 126). Accordingly, the patent term adjustment is 1254 days (715 days of A delay + 888 days of B delay - 349 days of applicant delay).

The Office will *sua sponte* issue a certificate of correction. Pursuant to 37 CFR 1.322, the Office will not issue a certificate of correction without first providing assignee or patentee an opportunity to be heard. Accordingly, patentees are given **one (1) month or thirty (30) days**, whichever is longer, from the mail date of this decision to respond. No extensions of time will be granted under § 1.136.

The Office acknowledges submission of the $200.00 fee set forth in 37 CFR 1.18(e). No additional fees are required.

The application is being forwarded to the Certificates of Corrections Branch for issuance of a certificate of correction. The Office will issue a certificate of correction indicating that the term of the above-identified patent is extended or adjusted by **one thousand, two hundred and fifty-four (1,254) days**.

Telephone inquiries specific to this matter should be directed to the undersigned at (571) 272-3222.

/Kenya A. McLaughlin/

Kenya A. McLaughlin
Petitions Attorney
Office of Petitions

Enclosure: Copy of DRAFT Certificate of Correction

**DRAFT COPY**

UNITED STATES PATENT AND TRADEMARK OFFICE

# CERTIFICATE OF CORRECTION

PATENT : 7,649,015 B2

DATED : Jan. 19, 2010

INVENTOR(S) : Arimilli et al.

It is certified that error appears in the above-identified patent and that said Letters Patent is hereby corrected as shown below:

On the cover page,

[*] Notice: Subject to any disclaimer, the term of this patent is extended or adjusted under 35 USC 154(b) by (751) days

Delete the phrase "by 751 days" and insert – by 1254 days--

UNITED STATES PATENT AND TRADEMARK OFFICE

UNITED STATES DEPARTMENT OF COMMERCE
United States Patent and Trademark Office
Address: COMMISSIONER FOR PATENTS
P.O. Box 1450
Alexandria, Virginia 22313-1450
www.uspto.gov

| APPLICATION NO. | FILING DATE | FIRST NAMED INVENTOR | ATTORNEY DOCKET NO. | CONFIRMATION NO. |
|---|---|---|---|---|
| 10/423,501 | 04/25/2003 | Thomas J. Cloonan | 7040 (FSP0484) | 2282 |

88095 7590 08/01/2011
ARRIS
3871 Lakefield Drive
Suwanee, GA 30024

| EXAMINER |
|---|
| ANDRAMUNO, FRANKLIN S |

| ART UNIT | PAPER NUMBER |
|---|---|
| 2424 | |

| NOTIFICATION DATE | DELIVERY MODE |
|---|---|
| 08/01/2011 | ELECTRONIC |

**Please find below and/or attached an Office communication concerning this application or proceeding.**

The time period for reply, if any, is set in the attached communication.

Notice of the Office communication was sent electronically on above-indicated "Notification Date" to the following e-mail address(es):

mirho@fspllc.com

UNITED STATES PATENT AND TRADEMARK OFFICE

COMMISSIONER FOR PATENTS
UNITED STATES PATENT AND TRADEMARK OFFICE
WASHINGTON, DC 20231
www.uspto.gov

In re Application of:
Thomas Cloonan
Application No. 10/423501
Filed: April 24, 2003
For: **Method and System for Adjusting Bandwidth In A Hybrid-Fiber Coaxial Network Using An Intelligently Controlled Dynamic RF Combiner**

DECISION ON PETITION UNDER 37 CFR 1.181 FOR REQUESTING A FEE REFUND

This is a decision on the petition under 37 CFR 1.181 filed on October 5, 2010, requesting a refund of a fee paid for a petition filed under 37 C.F.R. 1.116 for an extension of time or the fee for this petition.

The petition is **Granted**.

Relevant File Record History

On May 17, 2010, the examiner issued a final rejection.

On July 8, 2010, a notice of appeal and a Pre-Appeal Brief Conference Request was filed.

On August 5, 2010, a Pre-Appeal Conference Decision was mailed out.

On October 5, 2010 a petition was filed.

## REVIEW OF FACTS

The petitioner is asking to for a refund for the petition filed for extension of time on October 5, 2010. Petitioner's stated reason is that the Pre-Appeal Panel decision was never mailed by the Patent Office to the Applicant. As such, it made the Petitioner missed the period of reply, which necessitated filing the extension of time and paying the associated fee.

A review of our records indicates the Pre-Appeal Panel decision was mailed in **paper** to the address corresponding to Petitioner's Customer number 88095 on August 5, 2010.

The address associated with customer number 88095 is:

AARIS
3871 Lakefield Drive
Suwanee, GA 30024

The record also indicates that at the time, applicant had chosen electronic mailing of office actions. Thus the pre-appeal decision was not mailed out properly and the request for refund of the extension of time is hereby granted.

**DECISION**

For the above-stated reasons, the petition is **Granted**.

A message will be forwarded to the technical support staff to process the refund of $130.00.

It should be noted that the Pre-Appeal request on the bottom of page 1, had a request to change the correspondence address. That change will not be entered as it not on a separate page and the mere inclusion, in a paper being filed for another purpose, of an address which is different from the previously provided correspondence address, without mention of the fact that an address change is being made would not ordinarily be recognized or deemed as instructions to change the correspondence address on the file record.

Any inquiry regarding this decision should be directed to Tod Swann, Quality Assurance Specialist, at (571) 272-3612. A second point of Contact is Kim Huynh at (571)-272-4147.

__/Tod Swann/_____
Tod R Swann, WQAS 2430
Technology Center 2400
Networking, Multiplex, Cable and Information Security

## SPE RESPONSE FOR CERTIFICATE OF CORRECTION

**Paper No.:** _____

**DATE** : 9-3-10

**TO SPE OF** : ART UNIT 1791

**SUBJECT** : Request for Certificate of Correction for Appl. No.: 10424510 Patent No.: 7596969

Please respond to this request for a certificate of correction within 7 days.

**FOR IFW FILES:**

Please review the requested changes/corrections as shown in the **COCIN** document(s) in the IFW application image. No new matter should be introduced, nor should the scope or meaning of the claims be changed.

Please complete the response (see below) and forward the completed response to scanning using document code **COCX**.

**FOR PAPER FILES:**

Please review the requested changes/corrections as shown in the attached certificate of correction. Please complete this form (see below) and forward it with the file to:

**Certificates of Correction Branch (C of C)**
**Randolph Square – 9D10-E**
**Palm Location 7580**

Omega Lewis
Certificates of Correction Branch

**703-756-1575**

**Thank You For Your Assistance**

**The request for issuing the above-identified correction(s) is hereby:**
Note your decision on the appropriate box.

- [x] **Approved** — **All** changes apply.
- [ ] **Approved in Part** — Specify below which changes **do not** apply.
- [ ] **Denied** — State the reasons for denial below.

**Comments:** _____

_____

_____

_____

_____

**Matthew J. Daniels**
**SPE**

**1741**
**Art Unit**

UNITED STATES PATENT AND TRADEMARK OFFICE

COMMISSIONER FOR PATENTS
UNITED STATES PATENT AND TRADEMARK OFFICE
P.O. BOX 1450
ALEXANDRIA, VA 22313-1450
WWW.USPTO.GOV

Paper No.

Baker Donelson
Intellectual Property Department
Monarch Plaza, Suite 1600
3414 Peachtree Rd.
ATLANTA GA 30326

MAILED
APR 26 2011
OFFICE OF PETITIONS

| | | |
|---|---|---|
| In re Application of | : | |
| Johnson et al. | : | |
| Application No. 10/425,067 | : | |
| Patent No. 7,160,639 | : | DECISION ON PETITION |
| Filed: April 28, 2003 | : | PURSUANT TO 37 C.F.R. |
| Issue Date: January 9, 2007 | : | § 1.378(B) |
| Attorney Docket Number: | : | |
| 2170404-000076 | : | |
| Title: JOHNSON REVERSIBLE | : | |
| ENGINE | : | |

This is a decision on the petition filed on January 26, 2011, pursuant to 37 C.F.R. § 1.378(b) to accept the delayed payment of a maintenance fee for the above-referenced patent.

This petition pursuant to 37 C.F.R. § 1.378(b) is **DISMISSED**.

**Background**

The patent issued on January 9, 2007. The grace period for paying the 3½-year maintenance fee provided in 37 C.F.R. § 1.362(e) expired at midnight on January 9, 2011, with no payment received. Accordingly, the patent expired on January 9, 2011 at midnight.

Any petition to accept an unavoidably delayed payment of a maintenance fee filed under 37 C.F.R. § 1.378(b) must include:

(1) the required maintenance fee set forth in 37 C.F.R. § 1.20 (e) through (g);

(2) the surcharge set forth in 37 C.F.R. § 1.20(i)(1), and;

(3) a showing that the delay was unavoidable since reasonable care was taken to ensure that the maintenance fee would be paid timely and that the petition was filed promptly after the patentee was notified of, or otherwise became aware of, the expiration of the patent - the showing must enumerate the steps taken to ensure timely payment of the maintenance fee, the date and the manner in which patentee became aware of the expiration of the patent, and the steps taken to file the petition promptly.

With this petition, Petitioner has submitted the surcharge associated with a petition to accept the late payment of a maintenance fee as unavoidable, along with the 3½-year maintenance fee and a statement of facts.

Petitioner has met the first and second requirements of Rule 1.378(b). The failure to meet the third requirement of Rule 1.378(b) will be discussed below.

**The standard**

35 U.S.C. § 41(c)(1) states, *in pertinent part*:

> The Director may accept the payment of any maintenance fee… after the six-month grace period if the delay[1] is shown to the satisfaction of the Director to have been unavoidable.

37 C.F.R. § 1.378(b)(3) is at issue in this case. Acceptance of a late maintenance fee under the unavoidable delay standard is considered under the same standard for reviving an abandoned application under 37 C.F.R. § 1.137(a). This is a very stringent standard. Decisions on reviving abandoned applications on the basis of "unavoidable" delay have adopted the reasonably prudent person standard in determining if the delay was unavoidable:

> The word 'unavoidable' ... is applicable to ordinary human affairs, and requires no more or greater care or diligence than is generally used and observed by prudent and careful men in relation to their most important business.[2]

In addition, decisions are made on a "case-by-case basis, taking all the facts and circumstances into account." Nonetheless, a

---

1 This delay includes the entire period between the due date for the fee and the filing of a grantable petition pursuant to 37 C.F.R. § 1.378(b).
2 In re Mattullath, 38 App. D.C. 497, 514-15 (1912)(*quoting* Ex parte Pratt, 1887 Dec. Comm'r Pat. 31, 32-33 (1887)); see also Winkler v. Ladd, 221 F. Supp. 550, 552, 138 U.S.P.Q. 666, 167-68 (D.D.C. 1963), aff'd, 143 U.S.P.Q. 172 (D.C. Cir. 1963); Ex parte Henrich, 1913 Dec. Comm'r Pat. 139, 141 (1913).

petition cannot be granted where a petitioner has failed to meet his or her burden of establishing that the delay was "unavoidable."[3]

The burden of showing the cause of the delay is on the person seeking to revive the application.[4]

It is well-established that a delay caused by the mistakes or negligence of one's voluntarily-chosen representative does not constitute unavoidable delay within the meaning of 35 U.S.C. 133.[5] The Patent and Trademark Office must rely on the actions or inactions of duly authorized and voluntarily chosen representatives, and applicant is bound by the consequences of those actions or inactions. Thus, reliance on an attorney *per se* does not provide petitioner with a showing of unavoidable delay within the meaning of 37 CFR 1.378(b) and 35 U.S.C. § 41(c).[6] Rather, such reliance merely shifts the focus of the inquiry from petitioner to whether the attorney acted reasonably and prudently.[7]

Further, Courts have considered whether a delay caused by a heavy workload was unavoidable. In Smith v. Diamond, the Court held that an attorney's preoccupation with other matters that took precedence over responding to the dismissal of the petition mailed December 16, 1986 in this case does not justify a lack of diligence in filing the renewed petition until March 8, 1988. 209 U.S.P.Q. 1091 (D.D.C. 1981). Likewise, a delay was not found to be unavoidable where the petitioner cited a heavy workload by the attorney handling the petition in the present application as being a factor in causing the delay.[8]

**Application of the standard to the current facts and circumstances**

Petitioner's explanation of the delay has been considered, and it has been determined that it fails to meet the standard for

---

3 Haines v. Quigg, 673 F. Supp. at 316-17, 5 U.S.P.Q.2d at 1131-32.
4 Id.
5 Haines v. Quigg at 314 and 316-317; Link v. Wabash, 370 U.S. 626, 633-634 (1962).
6 See California Medical Products v. Technol Med. Prod., 921 F.Supp. 1219, 1259 (D.Del. 1995).
7 Id.
8 In re Takeo, 17 U.S.P.Q. 2d (BNA) 1155 (Comm'r Pat. & Trademarks Feb. 27, 1990).

acceptance of a late payment of the maintenance fee and surcharge as unavoidable.

Petitioner has explained that since January 9, 2011 fell on a Sunday, the last possible date on which the maintenance fee could be paid was extended to January 10, 2011.[9] Petitioner has asserted that he docketed the payment for January 9, 2011 in his law firm's docketing system,[10] with the intention of filing the maintenance fee on January 10, 2011, the last possible day on which the fee could be paid. Unfortunately, a snowstorm hit the Atlanta region on January 10, 2011, which resulted in the closure of Petitioner's law office from January 10, 2011 - January 11, 2011, as well as the suspension of USPS delivery during at least one of these two days as well.[11] It appears that Petitioner's law office reopened and USPS delivery resumed on January 12, 2011. Petitioner adds that he was "out of the office the majority of the week of January 17th," and returned to his office on January 24, 2011. The petition is silent as to why he was unable to file this petition during the period of January 12, 2011 - January 14, 2011, or when he was in his office the week of January 17, 2011.

Petitioner would have the Office accept the delayed payment of the maintenance fee for the above-referenced patent as unavoidable.

The period for paying the 3½-year maintenance fee without the surcharge extended from January 9, 2010 to July 9, 2010 and for paying with the surcharge from July 10, 2010 to January 9, 2011. Thus, the delay in paying the 3½-year maintenance fee extended

---

9 37 C.F.R. § 1.7(a) sets forth, *in toto*: "[w]henever periods of time are specified in this part in days, calendar days are intended. When the day, or the last day fixed by statute or by or under this part for taking any action or paying any fee in the United States Patent and Trademark Office falls on Saturday, Sunday, or on a Federal holiday within the District of Columbia, the action may be taken, or the fee paid, on the next succeeding business day which is not a Saturday, Sunday, or a Federal holiday. See § 1.304 for time for appeal or for commencing civil action."

10 Petitioner has included a printout of his docketing system which shows that this task was docketed for January 9, 2011.

11 The record is unclear as to the period of the suspension of USPS deliveries. Petitioner has asserted that delivery was suspended "until things cleared up," but does not state precisely when delivery resumed. Petitioner has included two articles from the Atlanta Journal-Constitution: the first article contains the same language, and the second suggests that deliveries partially resumed on January 11, 2011.

from January 9, 2011 at midnight to the filing of this petition on January 26, 2011.

Petitioner has established that steps were in place for monitoring the timely payment of the maintenance fees for this patent.

This petition cannot be granted, for the following three reasons.

First, on the evidence presented, it cannot be concluded that the burden of establishing that the delay was "unavoidable" is met. It appears that Petitioner delayed submitting the maintenance fee payment to the Office until January 10, 2011. Petitioner provides evidence that during the period of January 10, 2011 -January 11, 2011, there was a storm in the Atlanta region causing dangerous road conditions and the cessation of USPS operations during January 10, 2011. Petitioner states that due to these conditions, he was unable to submit the maintenance fee until January 26, 2011. It is not clear why it took another two weeks to submit the maintenance fee, as it appears that he had returned to his legal office prior to that date.

Moreover, it is noted that these weather conditions did not cause the United States Patent and Trademark Office to designate a postal service interruption and emergency within the meaning of 35 U.S.C. section 21(a) and 37 CFR 1.10(i) for affected individuals such that an action or fee due on January 10, 2011 was considered as timely for the purposes of, *e.g.*, 35 U.S.C. 119, 120, 133 and 151, if the action was taken, or the fee paid, on the next succeeding business day on which the United States Patent and Trademark Office was open.

Still further, it is not clear what prevented Petitioner from submitting the maintenance fee electronically on January 10, 2011. It is noted with interest that the record does not support a conclusion that power (and therefore connectivity to the Internet) was interrupted as a result of this storm.

Further still, the weather events on the due date were not the proximate cause of the delay in submitting the maintenance fee. Rather, the cause was that Petitioner waited until the very last day to submit the maintenance fee to the Office, and once USPS delivery resumed, he waited another two weeks to file the

maintenance fee along with this petition. While a practitioner may wait until the last day to file a submission to the Office, the practitioner does so at his or her peril. Those who wait until the last possible day do not leave any opportunity to overcome any error which might occur in filing the submission or an inability to file the submission until after the expiration of the deadline. In such a case, the consequence of such a delay does not rise to the level of unavoidable delay.

Second, **Petitioner has failed to indicate the date and the manner in which Patentee became aware of the expiration of the patent.**

Third, **Petitioner has failed to enumerate the steps taken to file the petition promptly.**

## Conclusion

Any request for reconsideration of this decision must be filed within **TWO MONTHS** of the mailing date of this decision. Any such petition for reconsideration must be accompanied by the $400 petition fee set forth in 37 C.F.R. § 1.17(h). <u>After decision on the petition for reconsideration, no further reconsideration or review of the matter will be undertaken by the Commissioner.</u> Accordingly, on request for reconsideration, it is extremely important that Petitioner supply <u>any</u> and <u>all</u> relevant information and documentation in order to meet his burden of showing unavoidable delay. This includes statements by all persons with direct knowledge of the cause of the delay, setting forth the facts as they know them. Petitioner must provide documentation and address the deficiencies noted above. If on request for reconsideration, the delayed payment of the maintenance fees is not accepted, then the maintenance fees are subject to refund following the decision on the petition for reconsideration, or after the expiration of the time for filing such a petition for reconsideration, if none is filed.

The reply should include a cover letter entitled "Renewed Petition pursuant to 37 C.F.R. § 1.378(e)". This is not a final agency action within the meaning of 5 U.S.C § 704.

Any response to this decision should indicate in a prominent manner that the attorney handling this matter is Paul Shanoski,

and may be submitted by mail,[12] hand-delivery,[13] or facsimile.[14] Registered users of EFS-Web may alternatively submit a response to this decision via EFS-Web.[15]

The general phone number for the Office of Petitions which should be used for status requests is (571) 272-3282. Telephone inquiries regarding this decision should be directed to the undersigned at (571) 272-3225. Inquiries pertaining to the submission of maintenance fees should be directed to the Maintenance Fee branch at 571-272-6500.

**Alternate Venue**

Petitioner may wish to strongly consider filing a petition under the unintentional standard, 37 CFR § 1.378(c).[16] Petitioner should be made aware that the standard associated with a petition filed under this section is far less stringent than the standard associated with a delay asserted to be "unavoidable". As the requirements of 37 C.F.R. § 1.378(b) are more exacting than the corresponding requirements of 37 C.F.R. § 1.378(c), a petition under the former is significantly less likely to be grantable as filed than is a petition under the later. A blank form which can be used in filing a petition under 37 C.F.R. § 1.378(c) may be found at: http://www.uspto.gov/web/forms/sb0066.pdf.

/Paul Shanoski/
Paul Shanoski
Senior Attorney
Office of Petitions

---

12 Mail Stop Petition, Commissioner for Patents, United States Patent and Trademark Office, P.O. Box 1450, Alexandria, VA, 22313-1450.
13 Customer Window, Randolph Building, 401 Dulaney Street, Alexandria, VA, 22314.
14 (571) 273-8300 - please note this is a central facsimile number.
15 https://sportal.uspto.gov/authenticate/authenticateuserlocalepf.html
16 A grantable petition pursuant to 37 CFR § 1.378(c) must be accompanied by:
(1) The maintenance fee as set forth in 37 CFR §§ 1.362(e) and 1.20 (already submitted);
(2) The surcharge for accepting a maintenance fee after expiration of a patent for non-timely payment of a maintenance fee, as set forth in 37 CFR § 1.20 (the already submitted $700 would be applied towards this $1640 fee);
(3) A statement that the delay was unintentional from a proper party in interest, and;
(4) The petition must be filed within 24 months of the date of expiration.

UNITED STATES PATENT AND TRADEMARK OFFICE

Commissioner for Patents
United States Patent and Trademark Office
P.O. Box 1450
Alexandria, VA 22313-1450
www.uspto.gov

In re Patent No. 7160639
Issue Date: January 9,2007
Application No. 10425067
Filed: April 28,2003
Attorney Docket No. 2170404-000076

:
:DECISION GRANTING PETITION
:UNDER 37 CFR 1.378(c)
:

This is a decision on the electronic petition, filed April 16,2012 ,under 37 CFR 1.378(c) to accept the unintentionally delayed payment of the 3.5 year maintenance fee for the above-identified patent.

The petition is **GRANTED**.

The maintenance fee is accepted, and the above-identified patent reinstated as of April 16,2012 .
This decision also constitutes notice that the fee has been accepted. An electronic copy of the petition and this decision has been created as an entry in the Image File Wrapper. Nevertheless, petitioner should print and retain an independent copy.

Telephone inquiries related to this electronic decision should be directed to the Electronic Business Center at 1-866-217-9197.

PTO/SB/66 (03-09)
Approved for use through 03/31/2012. OMB 0651-0016
U.S. Patent and Trademark Office: U.S. DEPARTMENT OF COMMERCE
Under the Paperwork Reduction Act of 1995, no persons are required to respond to a collection of information unless it displays valid OMB control number.

# PETITION TO ACCEPT UNINTENTIONALLY DELAYED PAYMENT OF MAINTENANCE FEE IN AN EXPIRED PATENT (37 CFR 1.378(c))

| Patent Number | Issue Date (YYYY-MM-DD) | Application Number | Filing Date (YYYY-MM-DD) | Docket Number (if applicable) |
|---|---|---|---|---|
| 7,160,639 | 2007-01-09 | 10/425,067 | 2003-04-28 | 2170404-000076 |

CAUTION: Maintenance fee (and surcharge, if any) payment must correctly identify: (1) the patent number and (2) the application number of the actual U.S. application leading to issuance of that patent to ensure the fee(s) is/are associated with the correct patent. 37 CFR 1.366(c) and (d).

SMALL ENTITY
☒ Patentee claims, or has previously claimed, small entity status. See 37 CFR 1.27.

LOSS OF ENTITLEMENT TO SMALL ENTITY STATUS
☐ Patentee is no longer entitled to small entity status. See 37 CFR 1.27(g)

| NOT Small Entity | | Small Entity | |
|---|---|---|---|
| Fee | Code | Fee | Code |
| ○ 3 ½ year | (1551) | ● 3 ½ year | (2551) |
| ○ 7 ½ year | (1552) | ○ 7 ½ year | (2552) |
| ○ 11 ½ year | (1553) | ○ 11 ½ year | (2553) |

SURCHARGE
The surcharge required by 37 CFR 1.20(i)(2) (Fee Code 1558) must be paid as a condition of accepting unintentionally delayed payment of the maintenance fee.

MAINTENANCE FEE (37 CFR 1.20(e)-(g))
The appropriate maintenance fee must be submitted with this petition.

STATEMENT
THE UNDERSIGNED CERTIFIES THAT THE DELAY IN PAYMENT OF THE MAINTENANCE FEE TO THIS PATENT WAS UNINTENTIONAL

PETITIONER(S) REQUEST THAT THE DELAYED PAYMENT OF THE MAINTENANCE FEE BE ACCEPTED AND THE PATENT REINSTATED

THIS PORTION MUST BE COMPLETED BY THE SIGNATORY OR SIGNATORIES

37 CFR 1.378(d) states: "Any petition under this section must be signed by an attorney or agent registered to practice before the Patent and Trademark Office, or by the patentee, the assignee, or other party in interest."

I certify, in accordance with 37 CFR 1.4(d)(4) that I am

- ● An attorney or agent registered to practice before the Patent and Trademark Office
- ○ A sole patentee
- ○ A joint patentee; I certify that I am authorized to sign this submission on behalf of all the other patentees.
- ○ A joint patentee; all of whom are signing this e-petition
- ○ The assignee of record of the entire interest

Under the Paperwork Reduction Act of 1995, no persons are required to respond to a collection of information unless it displays valid OMB control number.

| Patent Practitioner | | | |
|---|---|---|---|
| A signature of the applicant or representative is required in accordance with 37 CFR 1.33 and 10.18. Please see 37 CFR 1.4(d) for the form of the signature | | | |
| Signature | /dorian b kennedy/ | Date (YYYY-MM-DD) | 2012-04-16 |
| Name | Dorian B. Kennedy | Registration Number | 36840 |

This collection of information is required by 37 CFR 1.378(c). The information is required to obtain or retain a benefit by the public which is to file (and by the USPTO to process) an application. Confidentiality is governed by 35 U.S.C. 122 and 37 CFR 1.11 and 1.14. This collection is estimated to take 1 hour to complete, including gathering, preparing, and submitting the completed application form to the USPTO. Time will vary depending upon the individual case. Any comments on the amount of time you require to complete this form and/ or suggestions for reducing this burden, should be sent to the Chief Information Officer, U.S. Patent and Trademark Office, U.S. Department of Commerce, P.O. Box 1450, Alexandria, VA 22313-1450. DO NOT SEND FEES OR COMPLETED FORMS TO THIS ADDRESS. **This form can only be used when in conjunction with EFS-Web. If this form is mailed to the USPTO, it may cause delays in reinstating the patent.**

# Privacy Act Statement

The Privacy Act of 1974 (P.L. 93-579) requires that you be given certain information in connection with your submission of the attached form related to a patent application or patent. Accordingly, pursuant to the requirements of the Act, please be advised that: (1) the general authority for the collection of this information is 35 U.S.C. 2(b)(2); (2) furnishing of the information solicited is voluntary; and (3) the principal purpose for which the information is used by the U.S. Patent and Trademark Office is to process and/or examine your submission related to a patent application or patent. If you do not furnish the requested information, the U.S. Patent and Trademark Office may not be able to process and/or examine your submission, which may result in termination of proceedings or abandonment of the application or expiration of the patent.

The information provided by you in this form will be subject to the following routine uses:

1. The information on this form will be treated confidentially to the extent allowed under the Freedom of Information Act (5 U.S.C. 552) and the Privacy Act (5 U.S.C. 552a). Records from this system of records may be disclosed to the Department of Justice to determine whether the Freedom of Information Act requires disclosure of these records.

2. A record from this system of records may be disclosed, as a routine use, in the course of presenting evidence to a court, magistrate, or administrative tribunal, including disclosures to opposing counsel in the course of settlement negotiations.

3. A record in this system of records may be disclosed, as a routine use, to a Member of Congress submitting a request involving an individual, to whom the record pertains, when the individual has requested assistance from the Member with respect to the subject matter of the record.

4. A record in this system of records may be disclosed, as a routine use, to a contractor of the Agency having need for the information in order to perform a contract. Recipients of information shall be required to comply with the requirements of the Privacy Act of 1974, as amended, pursuant to 5 U.S.C. 552a(m).

5. A record related to an International Application filed under the Patent Cooperation Treaty in this system of records may be disclosed, as a routine use, to the International Bureau of the World Intellectual Property Organization, pursuant to the Patent Cooperation Treaty.

6. A record in this system of records may be disclosed, as a routine use, to another federal agency for purposes of National Security review (35 U.S.C. 181) and for review pursuant to the Atomic Energy Act (42 U.S.C. 218(c)).

7. A record from this system of records may be disclosed, as a routine use, to the Administrator, General Services, or his/her designee, during an inspection of records conducted by GSA as part of that agency's responsibility to recommend improvements in records management practices and programs, under authority of 44 U.S.C. 2904 and 2906. Such disclosure shall be made in accordance with the GSA regulations governing inspection of records for this purpose, and any other relevant (i.e., GSA or Commerce) directive. Such disclosure shall not be used to make determinations about individuals.

8. A record from this system of records may be disclosed, as a routine use, to the public after either publication of the application pursuant to 35 U.S.C. 122(b) or issuance of a patent pursuant to 35 U.S.C. 151. Further, a record may be disclosed, subject to the limitations of 37 CFR 1.14, as a routine use, to the public if the record was filed in an application which became abandoned or in which the proceedings were terminated and which application is referenced by either a published application, an application open to public inspections or an issued patent.

9. A record from this system of records may be disclosed, as a routine use, to a Federal, State, or local law enforcement agency, if the USPTO becomes aware of a violation or potential violation of law or regulation.

UNITED STATES PATENT AND TRADEMARK OFFICE

Commissioner for Patents
United States Patent and Trademark Office
P.O. Box 1450
Alexandria, VA 22313-1450
www.uspto.gov

PETER INGALLS COLMAN
52ND AVENUE TERRACE, WEST
BRADENTON, FL 34207

MAILED

NOV 22 2010

OFFICE OF PETITIONS

In re Patent No. 6,971,263
Issue Date: December 6, 2005
Application No. 10/425,313
Filed: April 29, 2003
Title of Invention: GOLF BALL PRECISION BALANCE SYSTEM

ON PETITION

This decision is in response to the petition filed October 1, 2010 under 37 CFR 1.378(c) to accept and record a maintenance fee for the above-identified patent.

The petition is **DISMISSED**.

If reconsideration of this decision is desired, a petition for reconsideration under 37 CFR 1.378(e) must be filed within TWO (2) MONTHS from the mail date of this decision. No extension of this two-month time limit can be granted under 37 CFR 1.136(a) or (b). This is **not** final agency action within the meaning of 5 U.S.C. § 704.

A petition to accept the unintentionally delayed payment of a maintenance fee under 35 U.S.C. § 41(c) and 37 CFR 1.378(c) must be accompanied by: (1) a statement that the delay was unintentional; (2) payment of the appropriate maintenance fee, unless previously submitted; (3) payment of the surcharge set forth in 37 CFR 1.20(i)(2). This petition lacks item (3) above.

The fees due are incorrectly stated in the petition and thus are deficient. Petitioner has submitted a check in the amount of $555.00 in payment of the first maintenance fee and the surcharge. The maintenance fee at this writing is set at $490.00 and the surcharge for an unintentional delay, due after the expiration, pursuant to 37 CFR 1.20(i)(2) is $1640.00, not $65.00.

A petition for reconsideration of this decision must be accompanied by the petition fee of $400 as set forth in 37 CFR 1.17(h). The petition for reconsideration must include the lacking item(s) noted below, since, after a decision on the petition for reconsideration, no further reconsideration or review of the matter will be undertaken by the Commissioner.

Additionally, all fees are subject to change and petitioner should check the correct fees prior to filing a request for reconsideration.

Further correspondence with respect to this matter should be addressed as follows:

By Mail: Mail Stop PETITION
Commissioner for Patents
Post Office Box 1450
Alexandria, VA 22313-1450

The centralized facsimile number is **(571) 273-8300.**

Telephone inquiries concerning this matter may be directed to the undersigned Petitions Attorney at (571) 272-3212.

Patricia Faison-Ball

Patricia Faison-Ball
Senior Petitions Attorney
Office of Petitions

UNITED STATES PATENT AND TRADEMARK OFFICE

Commissioner for Patents
United States Patent and Trademark Office
P.O. Box 1450
Alexandria, VA 22313-1450
www.uspto.gov

In re Application of
William Michael Frederick Taylor

Application No. 10425553

Filed: April 28,2003

Attorney Docket No. Q121769

:DECISION ON PETITION TO MAKE SPECIAL
:UNDER 37 CFR 1.102(c)(1)

This is a decision on the electronic petition under 37 CFR 1.102 (c)(1), filed 10-MAR-2011 to make the above-identified application special based on applicant's age as set forth in MPEP § 708.02, Section IV.

The petition is **GRANTED**.

A grantable petition to make an application special under 37 CFR 1.102(c)(1), MPEP § 708.02, Section IV: Applicant's Age must include a statement by applicant or a registered practitioner having evidence that applicant is at least 65 years of age. No fee is required.

Accordingly, the above-identified application has been accorded "special" status and will be taken up for action by the examiner upon the completion of all pre-examination processing.

Telephone inquiries concerning this electronic decision should be directed to the Electronic Business Center at 866-217-9197.

All other inquiries concerning either the examination or status of the application should be directed to the Technology Center.

UNITED STATES PATENT AND TRADEMARK OFFICE

Commissioner for Patents
United States Patent and Trademark Office
P.O. Box 1450
Alexandria, VA 22313-1450
www.uspto.gov

NIXON PEABODY, LLP
401 9TH STREET, NW
SUITE 900
WASHINGTON, DC 20004-2128

**MAILED**

**NOV 1 0 2010**

**OFFICE OF PETITIONS**

In re Application of
Michael Raley, et al.
Application No. 10/425,647
Filed: April 30, 2003
Attorney Docket No. 111325-000700

DECISION ON PETITION
TO WITHDRAW
FROM RECORD

This is a decision on the Request to Withdraw as attorney or agent of record under 37 C.F.R. § 1.36(b), filed September 10, 2010.

The request is **APPROVED**.

A grantable request to withdraw as attorney/agent of record must be signed by every attorney/agent seeking to withdraw or contain a clear indication that one attorney is signing on behalf of another/others.

The request was signed by Jeffrey L. Costellia on behalf of all attorneys of record who are associated with customer No. 22204. All attorneys/agents associated with the Customer Number 22204 have been withdrawn. Applicant is reminded that there is no attorney of record at this time.

The request to change the correspondence of record is not acceptable as the requested correspondence address is not that of: (1) the first named signing inventor; or (2) an intervening assignee of the entire interest under 37 C.F.R 3.71. All future communications from the Office will be directed to the first named signing inventor at the first copied address below until otherwise properly notified by the applicant.

In order to request or take action in a patent matter, the assignee must establish its ownership of the patent to the satisfaction of the Director. In this regard, a Statement under 37 CFR 3.73(b) must have either: (i) documentary evidence of a chain of title from the original owner to the assignee (*e.g.*, copy of an executed assignment), and a statement affirming that the documentary evidence of the chain of title from the original owner to the assignee was or concurrently is being submitted for recordation pursuant to § 3.11; or (ii) a statement specifying where documentary evidence of a chain of title from the original owner to the assignee is recorded in the assignment records of the

Office (*e.g.*, reel and frame number). The power of attorney filed October 8, 2010 does not include a proper statement filed under 37 CFR 3.73(b).

There are no pending Office actions at the present time.

Telephone inquiries concerning this decision should be directed to undersigned at 571-272-1642. All other inquiries concerning the examination or status of this application should be directed to the Technology Center.

/AMW/
April M. Wise
Petitions Examiner
Office of Petitions

cc: MICHAEL RALEY
12834 VERDURA AVENUE
DOWNEY, CA 90242

cc: CONTENTGUARD HOLDINGS. INC
222 N. SEPULVEDA BLVD.,
SUITE 1400
EL SEGUNDO, CA 90245

UNITED STATES PATENT AND TRADEMARK OFFICE

UNITED STATES DEPARTMENT OF COMMERCE
United States Patent and Trademark Office
Address: COMMISSIONER FOR PATENTS
P.O. Box 1450
Alexandria, Virginia 22313-1450
www.uspto.gov

| APPLICATION NUMBER | FILING OR 371(C) DATE | FIRST NAMED APPLICANT | ATTY. DOCKET NO./TITLE |
|---|---|---|---|
| 10/425,647 | 04/30/2003 | Michael C. Raley | 111325-000700 |

**CONFIRMATION NO. 4862**

**POWER OF ATTORNEY NOTICE**

22204
NIXON PEABODY, LLP
401 9TH STREET, NW
SUITE 900
WASHINGTON, DC 20004-2128

*OC000000044376227*

Date Mailed: 11/05/2010

## NOTICE REGARDING CHANGE OF POWER OF ATTORNEY

This is in response to the Power of Attorney filed 09/10/2010.

- The withdrawal as attorney in this application has been accepted. Future correspondence will be mailed to the new address of record. 37 CFR 1.33.

/amwise/

Office of Data Management, Application Assistance Unit (571) 272-4000, or (571) 272-4200, or 1-888-786-0101

UNITED STATES PATENT AND TRADEMARK OFFICE

Commissioner for Patents
United States Patent and Trademark Office
P.O. Box 1450
Alexandria, VA 22313-1450
www.uspto.gov

NIXON PEABODY, LLP
401 9TH STREET, NW
SUITE 900
WASHINGTON, DC 20004-2128

MAILED
NOV 10 2010
OFFICE OF PETITIONS

In re Application of
Michael Raley, et al.
Application No. 10/425,649
Filed: April 30, 2003
Attorney Docket No. 111325-470100

DECISION ON PETITION
TO WITHDRAW
FROM RECORD

This is a decision on the Request to Withdraw as attorney or agent of record under 37 C.F.R. § 1.36(b), filed September 10, 2010.

The request is **APPROVED**.

A grantable request to withdraw as attorney/agent of record must be signed by every attorney/agent seeking to withdraw or contain a clear indication that one attorney is signing on behalf of another/others.

The request was signed by Jeffrey L. Costellia on behalf of all attorneys of record who are associated with customer No. 22204. All attorneys/agents associated with the Customer Number 22204 have been withdrawn. Applicant is reminded that there is no attorney of record at this time.

The request to change the correspondence of record is not acceptable as the requested correspondence address is not that of: (1) the first named signing inventor; or (2) an intervening assignee of the entire interest under 37 C.F.R 3.71. All future communications from the Office will be directed to the first named signing inventor at the first copied address below until otherwise properly notified by the applicant.

In order to request or take action in a patent matter, the assignee must establish its ownership of the patent to the satisfaction of the Director. In this regard, a Statement under 37 CFR 3.73(b) must have either: (i) documentary evidence of a chain of title from the original owner to the assignee (*e.g.*, copy of an executed assignment), and a statement affirming that the documentary evidence of the chain of title from the original owner to the assignee was or concurrently is being submitted for recordation pursuant to § 3.11; or (ii) a statement specifying where documentary evidence of a chain of title from the original owner to the assignee is recorded in the assignment records of the Office (*e.g.*, reel and frame number).

There are no pending Office actions at the present time.

Telephone inquiries concerning this decision should be directed to undersigned at 571-272-1642. All other inquiries concerning the examination or status of this application should be directed to the Technology Center.

/AMW/
April M. Wise
Petitions Examiner
Office of Petitions

cc: MICHAEL RALEY
12834 VERDURA AVENUE
DOWNEY, CA 90242

cc: CONTENTGUARD HOLDINGS. INC
222 N. SEPULVEDA BLVD.,
SUITE 1400
EL SEGUNDO, CA 90245

UNITED STATES PATENT AND TRADEMARK OFFICE

UNITED STATES DEPARTMENT OF COMMERCE
United States Patent and Trademark Office
Address: COMMISSIONER FOR PATENTS
P.O. Box 1450
Alexandria, Virginia 22313-1450
www.uspto.gov

| APPLICATION NUMBER | FILING OR 371(C) DATE | FIRST NAMED APPLICANT | ATTY. DOCKET NO./TITLE |
|---|---|---|---|
| 10/425,649 | 04/30/2003 | Michael Raley | 111325-470100 |

**CONFIRMATION NO. 3053**

**POWER OF ATTORNEY NOTICE**

22204
NIXON PEABODY, LLP
401 9TH STREET, NW
SUITE 900
WASHINGTON, DC 20004-2128

*OC000000044371391*

Date Mailed: 11/05/2010

## NOTICE REGARDING CHANGE OF POWER OF ATTORNEY

This is in response to the Power of Attorney filed 09/10/2010.

- The withdrawal as attorney in this application has been accepted. Future correspondence will be mailed to the new address of record. 37 CFR 1.33.

/amwise/

Office of Data Management, Application Assistance Unit (571) 272-4000, or (571) 272-4200, or 1-888-786-0101

UNITED STATES PATENT AND TRADEMARK OFFICE

Commissioner for Patents
United States Patent and Trademark Office
P.O. Box 1450
Alexandria, VA 22313-1450
www.uspto.gov

NIXON PEABODY, LLP
401 9TH STREET, NW
SUITE 900
WASHINGTON, DC 20004-2128

MAILED

OCT 19 2010

OFFICE OF PETITIONS

| | | |
|---|---|---|
| In re Application of | : | |
| Michael Raley, et al. | : | |
| Application No. 10/425,933 | : | DECISION ON PETITION |
| Filed: April 30, 2003 | : | TO WITHDRAW |
| Attorney Docket No. 111325-000400 | : | FROM RECORD |
| | : | |

This is a decision on the Request to Withdraw as attorney or agent of record under 37 C.F.R. § 1.36(b), filed September 10, 2010.

The request is **DISMISSED** as moot.

A review of the file record indicates that the power of attorney to Nixon Peabody, LLP has been revoked by the assignee of the patent application on September 16, 2010. Accordingly, the request to withdraw under 37 C.F.R. § 1.36(b) is moot.

All future communications from the Office will continue to be directed to the below-listed address until otherwise notified by applicant.

Telephone inquires concerning this decision should be directed to undersigned at 571-272-1642.

/AMW/
April M. Wise
Petitions Examiner
Office of Petitions

UNITED STATES PATENT AND TRADEMARK OFFICE

Commissioner for Patents
United States Patent and Trademark Office
P.O. Box 1450
Alexandria, VA 22313-1450
www.uspto.gov

NIXON PEABODY, LLP
401 9TH STREET, NW
SUITE 900
WASHINGTON, DC 20004-2128

MAILED
NOV 10 2010
OFFICE OF PETITIONS

In re Application of
Michael Raley, et al.
Application No. 10/425,933
Filed: April 30, 2003
Attorney Docket No. 111325-000400

CORRECTED DECISION
DECISION ON PETITION
TO WITHDRAW
FROM RECORD

## CORRECTED DECISION

This is a corrected decision on the Request to Withdraw as attorney or agent of record under 37 C.F.R. § 1.36(b), filed September 10, 2010.

The request is **APPROVED**.

A grantable request to withdraw as attorney/agent of record must be signed by every attorney/agent seeking to withdraw or contain a clear indication that one attorney is signing on behalf of another/others.

The request was signed by Jeffrey L. Costellia on behalf of all attorneys of record who are associated with customer No. 22204. All attorneys/agents associated with the Customer Number 22204 have been withdrawn. Applicant is reminded that there is no attorney of record at this time.

The request to change the correspondence of record is not acceptable as the requested correspondence address is not that of: (1) the first named signing inventor; or (2) an intervening assignee of the entire interest under 37 C.F.R 3.71. All future communications from the Office will be directed to the first named signing inventor at the first copied address below until otherwise properly notified by the applicant.

In order to request or take action in a patent matter, the assignee must establish its ownership of the patent to the satisfaction of the Director. In this regard, a Statement under 37 CFR 3.73(b) must have either: (i) documentary evidence of a chain of title from the original owner to the assignee (*e.g.*, copy of an executed assignment), and a statement affirming that the documentary evidence of the chain of title from the original owner to the assignee was or concurrently is being submitted for recordation pursuant to § 3.11; or (ii) a statement specifying where documentary evidence of a

chain of title from the original owner to the assignee is recorded in the assignment records of the Office (*e.g.*, reel and frame number).
There is an outstanding Office action mailed July 12, 2010 that requires a reply from applicant.

Telephone inquiries concerning this decision should be directed to undersigned at 571-272-1642. All other inquiries concerning the examination or status of this application should be directed to the Technology Center.

/AMW/
April M. Wise
Petitions Examiner
Office of Petitions

cc: MICHAEL RALEY
12834 VERDURA AVENUE
DOWNEY, CA 90242

cc: CONTENTGUARD HOLDINGS. INC
222 N. SEPULVEDA BLVD.,
SUITE 1400
EL SEGUNDO, CA 90245

UNITED STATES PATENT AND TRADEMARK OFFICE

UNITED STATES DEPARTMENT OF COMMERCE
United States Patent and Trademark Office
Address: COMMISSIONER FOR PATENTS
P.O. Box 1450
Alexandria, Virginia 22313-1450
www.uspto.gov

| APPLICATION NUMBER | FILING OR 371(C) DATE | FIRST NAMED APPLICANT | ATTY. DOCKET NO./TITLE |
|---|---|---|---|
| 10/425,933 | 04/30/2003 | Michael Raley | 10-508-US-C8 (cg000400) |

**CONFIRMATION NO. 5344**

**POWER OF ATTORNEY NOTICE**

22204
NIXON PEABODY, LLP
401 9TH STREET, NW
SUITE 900
WASHINGTON, DC 20004-2128

*OC000000044074920*

Date Mailed: 10/19/2010

## NOTICE REGARDING CHANGE OF POWER OF ATTORNEY

This is in response to the Power of Attorney filed 09/10/2010.

- The withdrawal as attorney in this application has been accepted. Future correspondence will be mailed to the new address of record. 37 CFR 1.33.

/amwise/

Office of Data Management, Application Assistance Unit (571) 272-4000, or (571) 272-4200, or 1-888-786-0101

UNITED STATES PATENT AND TRADEMARK OFFICE

Commissioner for Patents
United States Patent and Trademark Office
P.O. Box 1450
Alexandria, VA 22313-1450
www.uspto.gov

NIXON PEABODY, LLP
401 9TH STREET, NW
SUITE 900
WASHINGTON, DC 20004-2128

MAILED
NOV 10 2010
OFFICE OF PETITIONS

In re Application of
Michael Raley, et al.
Application No. 10/425,941
Filed: April 30, 2003
Attorney Docket No. 111325-000600

DECISION ON PETITION
TO WITHDRAW
FROM RECORD

This is a decision on the Request to Withdraw as attorney or agent of record under 37 C.F.R. § 1.36(b), filed September 10, 2010.

The request is **APPROVED**.

A grantable request to withdraw as attorney/agent of record must be signed by every attorney/agent seeking to withdraw or contain a clear indication that one attorney is signing on behalf of another/others.

The request was signed by Jeffrey L. Costellia on behalf of all attorneys of record who are associated with customer No. 22204. All attorneys/agents associated with the Customer Number 22204 have been withdrawn. Applicant is reminded that there is no attorney of record at this time.

The request to change the correspondence of record is not acceptable as the requested correspondence address is not that of: (1) the first named signing inventor; or (2) an intervening assignee of the entire interest under 37 C.F.R 3.71. All future communications from the Office will be directed to the first named signing inventor at the first copied address below until otherwise properly notified by the applicant.

In order to request or take action in a patent matter, the assignee must establish its ownership of the patent to the satisfaction of the Director. In this regard, a Statement under 37 CFR 3.73(b) must have either: (i) documentary evidence of a chain of title from the original owner to the assignee (*e.g.*, copy of an executed assignment), and a statement affirming that the documentary evidence of the chain of title from the original owner to the assignee was or concurrently is being submitted for recordation pursuant to § 3.11; or (ii) a statement specifying where documentary evidence of a chain of title from the original owner to the assignee is recorded in the assignment records of the

Office (*e.g.*, reel and frame number). The power of attorney filed October 8, 2010 does not include a proper statement filed under 37 CFR 3.73(b).

There are no pending Office actions at the present time.

Telephone inquiries concerning this decision should be directed to undersigned at 571-272-1642. All other inquiries concerning the examination or status of this application should be directed to the Technology Center.

/AMW/
April M. Wise
Petitions Examiner
Office of Petitions

cc: MICHAEL RALEY
12834 VERDURA AVENUE
DOWNEY, CA 90242

cc: CONTENTGUARD HOLDINGS. INC
222 N. SEPULVEDA BLVD.,
SUITE 1400
EL SEGUNDO, CA 90245

UNITED STATES PATENT AND TRADEMARK OFFICE

UNITED STATES DEPARTMENT OF COMMERCE
United States Patent and Trademark Office
Address: COMMISSIONER FOR PATENTS
P.O. Box 1450
Alexandria, Virginia 22313-1450
www.uspto.gov

| APPLICATION NUMBER | FILING OR 371(C) DATE | FIRST NAMED APPLICANT | ATTY. DOCKET NO./TITLE |
|---|---|---|---|
| 10/425,941 | 04/30/2003 | Michael Raley | 111325-000600 |

**CONFIRMATION NO. 6400**

**POWER OF ATTORNEY NOTICE**

22204
NIXON PEABODY, LLP
401 9TH STREET, NW
SUITE 900
WASHINGTON, DC 20004-2128

*OC000000044378497*

Date Mailed: 11/05/2010

## NOTICE REGARDING CHANGE OF POWER OF ATTORNEY

This is in response to the Power of Attorney filed 09/10/2010.

- The withdrawal as attorney in this application has been accepted. Future correspondence will be mailed to the new address of record. 37 CFR 1.33.

/amwise/

Office of Data Management, Application Assistance Unit (571) 272-4000, or (571) 272-4200, or 1-888-786-0101

UNITED STATES PATENT AND TRADEMARK OFFICE

Commissioner for Patents
United States Patent and Trademark Office
P.O. Box 1450
Alexandria, VA 22313-1450
www.uspto.gov

WEISS & MOY PC
4204 NORTH BROWN AVENUE
SCOTTSDALE, AZ 85251

**MAILED**

JAN 25 2011

**OFFICE OF PETITIONS**

In re Patent No. 6,796,398
Issue Date: September 28, 2004
Application No. 10/426,104
Filed: April 29, 2003
Attorney Docket No. 4256P2603

ON PETITION

This is a decision on the petition under 37 CFR 1.378(b), filed November 22, 2010, to accept the unavoidably delayed payment of a maintenance fee for the above-identified patent.

The petition is **DISMISSED**.

The patent issued on September 28, 2004. The 3 ½ year maintenance fee was due by September 28, 2008. The fee could have been paid from September 28, 2007 thru March 28, 2008, or with a surcharge of $65 during the period of March 29, 2008 thru September 28, 2008. Accordingly, the patent expired at midnight December 20, 2009 for failure to timely submit the first maintenance fee.

A petition to accept the delayed payment of a maintenance fee under 35 USC 41(c) and 37 CFR 1.378(b) must be accompanied by (1) an adequate showing that the delay was unavoidable, since reasonable care was taken to insure that the maintenance fee would be paid timely, (2) payment of the appropriate maintenance fee, unless previously submitted, and (3) payment of the surcharge set forth in 37 CFR 1.20(i)(1). This petition lacks item (2) above.

Petitioner has not submitted the required fee for the first (3 ½ year) maintenance fee of $490. No consideration on the merits can be given if any and all fees currently due have not been submitted.

Petitioner will not receive future correspondence related to maintenance fees for the above identified patent unless a "fee address" (see PTO/SB/47) is submitted for the above-identified patent. A courtesy copy of this decision is being mailed to the address noted on the petition. However, until otherwise instructed, all future correspondence regarding this application will be mailed solely to the address of record.

If reconsideration of this decision is desired, a petition for reconsideration under 37 CFR 1.378(e) must be filed within **TWO (2) MONTHS** from the mail date of this decision. No extension of this 2-month time limit can be granted under 37 CFR 1.136(a) or (b). **Any such petition for reconsideration must be accompanied by the petition fee of $400 as set forth in 37 CFR 1.17(f)**. The petition for reconsideration should include an exhaustive attempt to provide the lacking item(s) noted below, since,

after a decision on the petition for reconsideration, the Director will undertake no further reconsideration or review of the matter.

Further correspondence with respect to this matter should be addressed as follows:

By Mail: Mail Stop PETITION
Commissioner for Patents
Post Office Box 1450
Alexandria, VA 22313-1450

By Hand: U. S. Patent and Trademark Office
Customer Service Window, Mail Stop Petitions
Randolph Building
401 Dulany Street
Alexandria, VA 22314

The centralized facsimile number is (571) 273-8300.

Telephone inquiries concerning this decision should be directed to April M. Wise at (571) 272-1642.

/dab/
David Bucci
Petitions Examiner
Office of Petitions

cc: FRANK M. GEVEY
1000 CABALLO BLVD
HENDERSON, NV 89014

PTO/SB/66 (03-09)
Approved for use through 03/31/2012. OMB 0651-0016
U.S. Patent and Trademark Office: U.S. DEPARTMENT OF COMMERCE
Under the Paperwork Reduction Act of 1995, no persons are required to respond to a collection of information unless it displays valid OMB control number.

# PETITION TO ACCEPT UNINTENTIONALLY DELAYED PAYMENT OF MAINTENANCE FEE IN AN EXPIRED PATENT (37 CFR 1.378(c))

| Patent Number | Issue Date (YYYY-MM-DD) | Application Number | Filing Date (YYYY-MM-DD) | Docket Number (if applicable) |
|---|---|---|---|---|
| 7,062,706 | 2006-06-13 | 10/426,182 | 2003-04-29 | 10587.0161-01000 |

CAUTION: Maintenance fee (and surcharge, if any) payment must correctly identify: (1) the patent number and (2) the application number of the actual U.S. application leading to issuance of that patent to ensure the fee(s) is/are associated with the correct patent. 37 CFR 1.366(c) and (d).

SMALL ENTITY
☐ Patentee claims, or has previously claimed, small entity status. See 37 CFR 1.27.

LOSS OF ENTITLEMENT TO SMALL ENTITY STATUS
☐ Patentee is no longer entitled to small entity status. See 37 CFR 1.27(g)

| NOT Small Entity | | | Small Entity | | |
|---|---|---|---|---|---|
| | Fee | Code | | Fee | Code |
| ◉ | 3 ½ year | (1551) | ○ | 3 ½ year | (2551) |
| ○ | 7 ½ year | (1552) | ○ | 7 ½ year | (2552) |
| ○ | 11 ½ year | (1553) | ○ | 11 ½ year | (2553) |

SURCHARGE
The surcharge required by 37 CFR 1.20(i)(2) (Fee Code 1558) must be paid as a condition of accepting unintentionally delayed payment of the maintenance fee.

MAINTENANCE FEE (37 CFR 1.20(e)-(g))
The appropriate maintenance fee must be submitted with this petition.

STATEMENT
THE UNDERSIGNED CERTIFIES THAT THE DELAY IN PAYMENT OF THE MAINTENANCE FEE TO THIS PATENT WAS UNINTENTIONAL

PETITIONER(S) REQUEST THAT THE DELAYED PAYMENT OF THE MAINTENANCE FEE BE ACCEPTED AND THE PATENT REINSTATED

THIS PORTION MUST BE COMPLETED BY THE SIGNATORY OR SIGNATORIES

37 CFR 1.378(d) states: "Any petition under this section must be signed by an attorney or agent registered to practice before the Patent and Trademark Office, or by the patentee, the assignee, or other party in interest."

I certify, in accordance with 37 CFR 1.4(d)(4) that I am

◉ An attorney or agent registered to practice before the Patent and Trademark Office

○ A sole patentee

○ A joint patentee; I certify that I am authorized to sign this submission on behalf of all the other patentees.

○ A joint patentee; all of whom are signing this e-petition

○ The assignee of record of the entire interest

Under the Paperwork Reduction Act of 1995, no persons are required to respond to a collection of information unless it displays valid OMB control number.

| Patent Practitioner | | | |
|---|---|---|---|
| A signature of the applicant or representative is required in accordance with 37 CFR 1.33 and 10.18. Please see 37 CFR 1.4(d) for the form of the signature | | | |
| Signature | /Trenton J. Roche/ | Date (YYYY-MM-DD) | 2011-04-19 |
| Name | Trenton J. Roche | Registration Number | 61164 |

This collection of information is required by 37 CFR 1.378(c). The information is required to obtain or retain a benefit by the public which is to file (and by the USPTO to process) an application. Confidentiality is governed by 35 U.S.C. 122 and 37 CFR 1.11 and 1.14. This collection is estimated to take 1 hour to complete, including gathering, preparing, and submitting the completed application form to the USPTO. Time will vary depending upon the individual case. Any comments on the amount of time you require to complete this form and/ or suggestions for reducing this burden, should be sent to the Chief Information Officer, U.S. Patent and Trademark Office, U.S. Department of Commerce, P.O. Box 1450, Alexandria, VA 22313-1450. DO NOT SEND FEES OR COMPLETED FORMS TO THIS ADDRESS. **This form can only be used when in conjunction with EFS-Web. If this form is mailed to the USPTO, it may cause delays in reinstating the patent.**

# Privacy Act Statement

The Privacy Act of 1974 (P.L. 93-579) requires that you be given certain information in connection with your submission of the attached form related to a patent application or patent. Accordingly, pursuant to the requirements of the Act, please be advised that: (1) the general authority for the collection of this information is 35 U.S.C. 2(b)(2); (2) furnishing of the information solicited is voluntary; and (3) the principal purpose for which the information is used by the U.S. Patent and Trademark Office is to process and/or examine your submission related to a patent application or patent. If you do not furnish the requested information, the U.S. Patent and Trademark Office may not be able to process and/or examine your submission, which may result in termination of proceedings or abandonment of the application or expiration of the patent.

The information provided by you in this form will be subject to the following routine uses:

1. The information on this form will be treated confidentially to the extent allowed under the Freedom of Information Act (5 U.S.C. 552) and the Privacy Act (5 U.S.C. 552a). Records from this system of records may be disclosed to the Department of Justice to determine whether the Freedom of Information Act requires disclosure of these records.

2. A record from this system of records may be disclosed, as a routine use, in the course of presenting evidence to a court, magistrate, or administrative tribunal, including disclosures to opposing counsel in the course of settlement negotiations.

3. A record in this system of records may be disclosed, as a routine use, to a Member of Congress submitting a request involving an individual, to whom the record pertains, when the individual has requested assistance from the Member with respect to the subject matter of the record.

4. A record in this system of records may be disclosed, as a routine use, to a contractor of the Agency having need for the information in order to perform a contract. Recipients of information shall be required to comply with the requirements of the Privacy Act of 1974, as amended, pursuant to 5 U.S.C. 552a(m).

5. A record related to an International Application filed under the Patent Cooperation Treaty in this system of records may be disclosed, as a routine use, to the International Bureau of the World Intellectual Property Organization, pursuant to the Patent Cooperation Treaty.

6. A record in this system of records may be disclosed, as a routine use, to another federal agency for purposes of National Security review (35 U.S.C. 181) and for review pursuant to the Atomic Energy Act (42 U.S.C. 218(c)).

7. A record from this system of records may be disclosed, as a routine use, to the Administrator, General Services, or his/her designee, during an inspection of records conducted by GSA as part of that agency's responsibility to recommend improvements in records management practices and programs, under authority of 44 U.S.C. 2904 and 2906. Such disclosure shall be made in accordance with the GSA regulations governing inspection of records for this purpose, and any other relevant (i.e., GSA or Commerce) directive. Such disclosure shall not be used to make determinations about individuals.

8. A record from this system of records may be disclosed, as a routine use, to the public after either publication of the application pursuant to 35 U.S.C. 122(b) or issuance of a patent pursuant to 35 U.S.C. 151. Further, a record may be disclosed, subject to the limitations of 37 CFR 1.14, as a routine use, to the public if the record was filed in an application which became abandoned or in which the proceedings were terminated and which application is referenced by either a published application, an application open to public inspections or an issued patent.

9. A record from this system of records may be disclosed, as a routine use, to a Federal, State, or local law enforcement agency, if the USPTO becomes aware of a violation or potential violation of law or regulation.

UNITED STATES PATENT AND TRADEMARK OFFICE

Commissioner for Patents
United States Patent and Trademark Office
P.O. Box 1450
Alexandria, VA 22313-1450
www.uspto.gov

In re Patent No. 7062706
Issue Date: June 13,2006
Application No. 10426182
Filed: April 29,2003
Attorney Docket No. 10587.0161-01000

:
:DECISION GRANTING PETITION
:UNDER 37 CFR 1.378(c)
:

This is a decision on the electronic petition, filed April 19,2011 ,under 37 CFR 1.378(c) to accept the unintentionally delayed payment of the 3.5 year maintenance fee for the above-identified patent.

The petition is **GRANTED**.

The maintenance fee is accepted, and the above-identified patent reinstated as of April 19,2011 . This decision also constitutes notice that the fee has been accepted. An electronic copy of the petition and this decision has been created as an entry in the Image File Wrapper. Nevertheless, petitioner should print and retain an independent copy.

Telephone inquiries related to this electronic decision should be directed to the Electronic Business Center at 1-866-217-9197.

**Doc Code: PET.PTA.RCAL**
**Document Description: Request for Recalculation in view of Wyeth**

PTO/SB/131 (01-10)
Approved for use through 02/28/2011. OMB 0651-0020
U.S. Patent and Trademark Office; U. S. DEPARTMENT OF COMMERCE
Under the Paperwork Reduction Act of 1995, no persons are required to respond to a collection of information unless it displays a valid OMB control number.

# REQUEST FOR RECALCULATION OF PATENT TERM ADJUSTMENT IN VIEW OF *WYETH**

| | |
|---|---|
| Attorney Docket Number: 67080-044 | Patent Number: 7661373 |
| Filing Date (or 371(b) or (f) Date): 04/29/2003 | Issue Date: 02/16/2010 |
| First Named Inventor: William P. Apps | |
| Title: PALLET ASSEMBLY | |

PATENTEE HEREBY REQUESTS RECALCULATION OF THE PATENT TERM ADJUSTMENT (PTA) UNDER 35 USC 154(b) INDICATED ON THE ABOVE-IDENTIFIED PATENT. THE PATENTEE'S SOLE BASIS FOR REQUESTING THE RECALCULATION IS THE USPTO'S PRE-*WYETH* INTERPRETATION OF 35 U.S.C. 154(b)(2)(A).

Note: This form is only for requesting a recalculation of PTA for patents issued before March 2, 2010, if the sole basis for requesting the recalculation is the USPTO's pre-*Wyeth* interpretation of 35 U.S.C. 154(b)(2)(A). See Instruction Sheet on page 2 for more information.

Patentees are reminded that to preserve the right to review in the United States District Court for the District of Columbia of the USPTO's patent term adjustment determination, a patentee must ensure that he or she also takes the steps required under 35 U.S.C. 154(b)(3) and (b)(4) and 37 CFR 1.705 in a timely manner.

**Wyeth v. Kappos*, No. 2009-1120 (Fed. Cir., Jan. 7, 2010).

| | |
|---|---|
| Signature /John E. Carlson/ | Date 8-12-2010 |
| Name (Print/Typed) John E. Carlson | Registration Number 37794 |

***Note**: Signatures of all the inventors or assignees of record of the entire interest or their representative(s) are required in accordance with 37 CFR 1.33 and 11.18. Please see 37 CFR 1.4(d) for the form of the signature. If necessary, submit multiple forms for more than one signature, see below**.*

☐ *Total of _____ forms are submitted.

The information is required to obtain or retain a benefit by the public which is to file (and by the USPTO to process) an application. Confidentiality is governed by 35 U.S.C. 122 and 37 CFR 1.11 and 1.14. This collection is estimated to take 12 hours to complete, including gathering, preparing, and submitting the completed application form to the USPTO. Time will vary depending upon the individual case. Any comments on the amount of time you require to complete this form and/or suggestions for reducing this burden, should be sent to the Chief Information Officer, U.S. Patent and Trademark Office, U.S. Department of Commerce, P.O. Box 1450, Alexandria, VA 22313-1450. DO NOT SEND FEES OR COMPLETED FORMS TO THIS ADDRESS. **SEND TO: Commissioner for Patents, P.O. Box 1450, Alexandria, VA 22313-1450.**

*If you need assistance in completing the form, call 1-800-PTO-9199 and select option 2.*

UNITED STATES PATENT AND TRADEMARK OFFICE

UNITED STATES DEPARTMENT OF COMMERCE
United States Patent and Trademark Office
Address: COMMISSIONER FOR PATENTS
P.O. Box 1450
Alexandria, Virginia 22313-1450
www.uspto.gov

Konstantine J. Diamond
4010 E. 26th Street
Los Angeles, CA 90023

Mail Date: 08/19/2010

| | | |
|---|---|---|
| **Applicant** | : William P. Apps | : DECISION ON REQUEST FOR |
| **Patent Number** | : 7661373 | : RECALCULATION of PATENT |
| **Issue Date** | : 02/16/2010 | : TERM ADJUSTMENT IN VIEW |
| **Application No** | : 10/426,338 | : OF WYETH AND NOTICE OF INTENT TO |
| **Filed** | : 04/29/2003 | : ISSUE CERTIFICATE OF CORRECTION |
| | | : |

The Request for Recalculation is **GRANTED** to the extent indicated.

The patent term adjustment has been determined to be **1142** days. The USPTO will *sua sponte* issue a certificate of correction reflecting the amount of PTA days determined by the recalculation.

Prior to the issuance of the certificate of correction, the USPTO will afford patentee an opportunity to be heard and request reconsideration. Accordingly, patentee has **one month or thirty (30) days**, whichever is longer, to file a request for reconsideration of this patent term adjustment calculation. See 35 U.S.C. 154(b)(3)(B)(ii) and 37 CFR 1.322(a)(4). No extensions of time will be granted under 37 CFR 1.136.

Patentee should use document code PET.OP if electronically filing a request for reconsideration of this patent term adjustment calculation. The patentee must also include the information required by 37 CFR 1.705(b)(2) and the fee required by 37 CFR 1.18(e). If patentee does not file a timely request for reconsideration of this patent term adjustment calculation including the information required by 37 CFR 1.705(b)(2) and the fee required by 37 CFR 1.18(e), the USPTO will issue a certificate of correction reflecting the PTA determination noted above.

Patentee should be aware that in order to preserve the right to review in the United States District Court for the District of Columbia of the USPTO patent term adjustment determination, patentee must ensure that he or she also take the steps required under 35 U.S.C. 154(b)(4)(A) in a timely manner. Nothing in the request for recalculation should be construed as providing an alternative time frame for commencing a civil action under 35 U.S.C. 154(b)(4)(A).

Any questions concerning this decision should be directed to the Office of Patent Legal Administration at 571-272-7702.

## SPE RESPONSE FOR CERTIFICATE OF CORRECTION

Paper No.: _____

DATE : 2-2-11

TO SPE OF : ART UNIT 2828

SUBJECT : Request for Certificate of Correction for Appl. No.: 10426472 Patent No.: 7515620

Please respond to this request for a certificate of correction within 7 days.

**FOR IFW FILES:**

Please review the requested changes/corrections as shown in the **COCIN** document(s) in the IFW application image. No new matter should be introduced, nor should the scope or meaning of the claims be changed.

Please complete the response (see below) and forward the completed response to scanning using document code **COCX**.

**FOR PAPER FILES:**

Please review the requested changes/corrections as shown in the attached certificate of correction. Please complete this form (see below) and forward it with the file to:

**Certificates of Correction Branch (C of C)**
**Randolph Square – 9D10-E**
**Palm Location 7580**

Omega Lewis
Certificates of Correction Branch

**703-756-1575**

**Thank You For Your Assistance**

**The request for issuing the above-identified correction(s) is hereby:**
Note your decision on the appropriate box.

- [x] **Approved** — **All** changes apply.
- [ ] **Approved in Part** — Specify below which changes **do not** apply.
- [ ] **Denied** — State the reasons for denial below.

**Comments:** _____

MINSUN OH HARVEY
PRIMARY EXAMINER
**SPE**

2828
**Art Unit**

UNITED STATES PATENT AND TRADEMARK OFFICE

Commissioner for Patents
United States Patent and Trademark Office
P.O. Box 1450
Alexandria, VA 22313-1450
www.uspto.gov

**TOWNSEND AND TOWNSEND AND CREW LLP/ORACLE**
**TWO EMBARCADERO CENTER**
**8TH FLOOR**
**SAN FRANCISCO CA 94111-3834**

MAILED

OCT 18 2010

OFFICE OF PETITIONS

ON PETITION

| | | |
|---|---|---|
| In re Application of | : | |
| Rowen, Marc | : | |
| Application No. 10/426,498 | : | |
| Filed: April 29, 2003 | : | |
| Attorney Docket No. 021756-017500US | : | |

This is a decision on the petition, filed September 13, 2010, which is being treated as a petition under 37 CFR 1.181, requesting withdrawal of the holding of abandonment in the above-identified application.

The petition is **GRANTED**.

This application was held abandoned for failure to timely respond to the Office action of February 2, 2010, which set a three (3) month shortened statutory period for reply. Accordingly, a reply was due on or before May 3, 2010. A Notice of Abandonment was mailed August 31, 2010.

Petitioner states that a timely reply was electronically submitted on April 30, 2010. Petitioner has submitted a copy of the Electronic Acknowledgement Receipt, which shows receipt of an Amendment on April 30, 2010. Petitioner has also submitted a copy of Private Pair, which again shows receipt of an Amendment on April 30, 2010. Petitioner has submitted a copy of the previously mailed correspondence.

A review of the application file confirms receipt of the Amendment on April 30, 2010.

Accordingly, the holding of abandonment for failure to timely file a reply to the Office action of February 2, 2010 is hereby withdrawn and the application restored to pending status.

This application is being referred to Technology Center AU 3622 for appropriate action in the normal course of business on the reply received with petition.

Liana Walsh
Petitions Examiner
Office of Petitions

UNITED STATES PATENT AND TRADEMARK OFFICE

Commissioner for Patents
United States Patent and Trademark Office
P.O. Box 1450
Alexandria, VA 22313-1450
www.uspto.gov

DAVIS, BROWN, KOEHN, SHORS & ROBERTS, P.C.
THE DAVIS BROWN TOWER
215 10TH STREET SUITE 1300
DES MOINES IA 50309

MAILED
APR 05 2011
OFFICE OF PETITIONS

| | | |
|---|---|---|
| In re Application of | : | |
| AUSICH et al. | : | |
| Application No. 10/426,678 | : | DECISION ON PETITION |
| Filed: April 30, 2003 | : | UNDER 37 CFR 1.78(a)(3) |
| Docket No. 4532659/53450 (KEM 61) | : | |

This is a decision on the petition under 37 CFR 1.78(a)(3), filed February 28, 2011, to accept an unintentionally delayed claim under 35 U.S.C. §120 for the benefit of priority to the prior-filed nonprovisional application set forth in the concurrently filed amendment.

The petition is **DISMISSED.**

A petition for acceptance of a claim for late priority under 37 CFR 1.78(a)(3) is only applicable to those applications filed on or after November 29, 2000. Further, the petition is appropriate only after the expiration of the period specified in 37 CFR 1.78(a)(2)(ii). In addition, the petition under 37 CFR 1.78(a)(3) must be accompanied by:

**(1)** the reference required by 35 U.S.C. § 120 and 37 CFR 1.78(a)(2)(i) of the prior-filed application, unless previously submitted;
**(2)** the surcharge set forth in § 1.17(t); and
**(3)** a statement that the entire delay between the date the claim was due under 37 CFR 1.78(a)(2)(ii) and the date the claim was filed was unintentional. The Director may require additional information where there is a question whether the delay was unintentional.

The petition does not comply with item (1) and (3).

37 CFR 1.78(a)(2)(i) requires that any nonprovisional application claiming the benefit of one or more prior-filed copending nonprovisional applications must contain or be amended to contain a reference to each such prior-filed application, identifying it by application number (consisting of the series code and serial number) and indicating the relationship of the applications. The relationship between the applications is whether the subject application is a continuation,

divisional, or continuation-in-part of a prior-filed nonprovisional application. An example of a proper benefit claim is: "This application is a continuation of Application No. 10/---, filed---." A benefit claim that merely states: "This application claims the benefit of Application No. 10/---, filed---," does not comply with 37 CFR 1.72(a)(2)(i) since the proper relationship, which includes the type of continuing application, is not stated. Also, the status of each nonprovisional parent application (if it is patented or abandoned) should also be indicated, following the filing date of the parent nonprovisional application. *See* MPEP Section 201.11, Reference to Prior Nonprovisional Applications. The amendment fails to comply with the provisions of 37 CFR 1.78(a)(2)(i) and is therefore unacceptable.

The rule at 37 CFR § 1.78(a)(3) requires a statement that the entire delay between the date the claim was due under 37 CFR § 1.78(a)(2)(ii) and the date the claim was filed was unintentional. Petitioner has not provided the required statement. Further, the statement should not vary from the required language as set forth in the rule.

Before the petition under 37 CFR § 1.78(a)(3) can be granted, a renewed petition under 37 CFR § 1.78(a)(3), an Application Data Sheet or a substitute amendment (complying with 37 CFR 1.121 and 37 CFR 1.76(b)(5)), which states the relationship of the prior-filed application to this application and the statement of unintentional delay, are required.

Further correspondence with respect to this matter should be addressed as follows:

By mail: Mail Stop PETITIONS
Commissioner for Patents
Post Office Box 1450
Alexandria, VA 22313-1450

By hand: Customer Service Window
Mail Stop Petitions
Randolph Building
401 Dulany Street
Alexandria, VA 22314

By fax: (571) 273-8300
ATTN: Office of Petitions

Any questions concerning this matter may be directed to Jose' G Dees at (571) 272-1569.

Christopher Bottorff
Petitions Examiner
Office of Petitions

UNITED STATES PATENT AND TRADEMARK OFFICE

Commissioner for Patents
United States Patent and Trademark Office
P.O. Box 1450
Alexandria, VA 22313-1450
www.uspto.gov

DAVIS, BROWN, KOEHN, SHORS & ROBERTS, P.C.
THE DAVIS BROWN TOWER
215 10TH STREET SUITE 1300
DES MOINES IA 50309

**MAILED**

SEP 08 2011

**OFFICE OF PETITIONS**

In re Application of
AUSICH et al.
Application No. 10/426,678
Filed: April 30, 2003
Docket No.: 4532659/53450 (KEM 61)

DECISION ON PETITION
UNDER 37 CFR 1.78(a)(3)

This is a decision on the renewed petition under 37 CFR 1.78(a)(3), filed August 23, 2011, to accept an unintentionally delayed claim under 35 U.S.C. §120 for the benefit of priority to the prior-filed nonprovisional application set forth in the concurrently filed amendment.

The petition is **DISMISSED.**

A petition for acceptance of a claim for late priority under 37 CFR 1.78(a)(3) is only applicable to those applications filed on or after November 29, 2000. Further, the petition is appropriate only after the expiration of the period specified in 37 CFR 1.78(a)(2)(ii). In addition, the petition under 37 CFR 1.78(a)(3) must be accompanied by:

**(1)** the reference required by 35 U.S.C. § 120 and 37 CFR 1.78(a)(2)(i) of the prior-filed application, unless previously submitted;
**(2)** the surcharge set forth in § 1.17(t); and
**(3)** a statement that the entire delay between the date the claim was due under 37 CFR 1.78(a)(2)(ii) and the date the claim was filed was unintentional. The Director may require additional information where there is a question whether the delay was unintentional.

The petition does not comply with item (1). The Amendment and Response after final Office action received on August 23, 2011 was duly considered by the examiner and did not place the application in condition for allowance for the reasons stated in the advisory Office action. The examiner has indicated that the proposed amendment to add a new claim and to claim priority to a prior nonprovisional application would raise new issues and require further consideration

and/or search. Further, the proposed amendments are not deemed to place the application in better form for appeal by materially reducing or simplifying the issues for appeal.

Therefore, since the amendment does not *prima facie* place the application in condition for allowance, petitioner must now submit a request for continued examination (RCE) under the provisions of 37 CFR 1.114, or file a continuing application pursuant to the provisions of 37 CFR 1.53(b).

Before the petition under 37 CFR § 1.78(a)(3) can be granted, a renewed petition under 37 CFR § 1.78(a)(3) and an Application Data Sheet or a substitute amendment (complying with 37 CFR 1.121 and 37 CFR 1.76(b)(5)), are required.

Further correspondence with respect to this matter should be addressed as follows:

By mail: Mail Stop PETITIONS
Commissioner for Patents
Post Office Box 1450
Alexandria, VA 22313-1450

By hand: Customer Service Window
Mail Stop Petitions
Randolph Building
401 Dulany Street
Alexandria, VA 22314

By fax: (571) 273-8300
ATTN: Office of Petitions

Any questions concerning this matter may be directed to Jose' G Dees at (571) 272-1569.

Christopher Bottorff
Petitions Examiner
Office of Petitions

Attachment: Advisory Action

| Advisory Action Before the Filing of an Appeal Brief | Application No. 10/426,678 | Applicant(s) AUSICH ET AL. |
|---|---|---|
| | Examiner PATRICIA A. LEITH | Art Unit 1655 |

***--The MAILING DATE of this communication appears on the cover sheet with the correspondence address --***

THE REPLY FILED 23 August 2011 FAILS TO PLACE THIS APPLICATION IN CONDITION FOR ALLOWANCE.

1. ☐ The reply was filed after a final rejection, but prior to or on the same day as filing a Notice of Appeal. To avoid abandonment of this application, applicant must timely file one of the following replies: (1) an amendment, affidavit, or other evidence, which places the application in condition for allowance; (2) a Notice of Appeal (with appeal fee) in compliance with 37 CFR 41.31; or (3) a Request for Continued Examination (RCE) in compliance with 37 CFR 1.114. The reply must be filed within one of the following time periods:
   a) ☐ The period for reply expires _____months from the mailing date of the final rejection.
   b) ☒ The period for reply expires on: (1) the mailing date of this Advisory Action, or (2) the date set forth in the final rejection, whichever is later. In no event, however, will the statutory period for reply expire later than SIX MONTHS from the mailing date of the final rejection.
   Examiner Note: If box 1 is checked, check either box (a) or (b). ONLY CHECK BOX (b) WHEN THE FIRST REPLY WAS FILED WITHIN TWO MONTHS OF THE FINAL REJECTION. See MPEP 706.07(f).

Extensions of time may be obtained under 37 CFR 1.136(a). The date on which the petition under 37 CFR 1.136(a) and the appropriate extension fee have been filed is the date for purposes of determining the period of extension and the corresponding amount of the fee. The appropriate extension fee under 37 CFR 1.17(a) is calculated from: (1) the expiration date of the shortened statutory period for reply originally set in the final Office action; or (2) as set forth in (b) above, if checked. Any reply received by the Office later than three months after the mailing date of the final rejection, even if timely filed, may reduce any earned patent term adjustment. See 37 CFR 1.704(b).

NOTICE OF APPEAL

2. ☐ The Notice of Appeal was filed on _____. A brief in compliance with 37 CFR 41.37 must be filed within two months of the date of filing the Notice of Appeal (37 CFR 41.37(a)), or any extension thereof (37 CFR 41.37(e)), to avoid dismissal of the appeal. Since a Notice of Appeal has been filed, any reply must be filed within the time period set forth in 37 CFR 41.37(a).

AMENDMENTS

3. ☒ The proposed amendment(s) filed after a final rejection, but prior to the date of filing a brief, will not be entered because
   (a) ☒ They raise new issues that would require further consideration and/or search (see NOTE below);
   (b) ☐ They raise the issue of new matter (see NOTE below);
   (c) ☒ They are not deemed to place the application in better form for appeal by materially reducing or simplifying the issues for appeal; and/or
   (d) ☐ They present additional claims without canceling a corresponding number of finally rejected claims.
   NOTE: _____. (See 37 CFR 1.116 and 41.33(a)).
4. ☐ The amendments are not in compliance with 37 CFR 1.121. See attached Notice of Non-Compliant Amendment (PTOL-324).
5. ☐ Applicant's reply has overcome the following rejection(s): _____.
6. ☐ Newly proposed or amended claim(s) _____ would be allowable if submitted in a separate, timely filed amendment canceling the non-allowable claim(s).
7. ☒ For purposes of appeal, the proposed amendment(s): a) ☒ will not be entered, or b) ☐ will be entered and an explanation of how the new or amended claims would be rejected is provided below or appended.
   The status of the claim(s) is (or will be) as follows:
   Claim(s) allowed: _____.
   Claim(s) objected to: _____.
   Claim(s) rejected: *1,5,7,16,17 and 35*.
   Claim(s) withdrawn from consideration: _____.

AFFIDAVIT OR OTHER EVIDENCE

8. ☐ The affidavit or other evidence filed after a final action, but before or on the date of filing a Notice of Appeal will not be entered because applicant failed to provide a showing of good and sufficient reasons why the affidavit or other evidence is necessary and was not earlier presented. See 37 CFR 1.116(e).
9. ☐ The affidavit or other evidence filed after the date of filing a Notice of Appeal, but prior to the date of filing a brief, will not be entered because the affidavit or other evidence failed to overcome all rejections under appeal and/or appellant fails to provide a showing a good and sufficient reasons why it is necessary and was not earlier presented. See 37 CFR 41.33(d)(1).
10. ☐ The affidavit or other evidence is entered. An explanation of the status of the claims after entry is below or attached.

REQUEST FOR RECONSIDERATION/OTHER

11. ☒ The request for reconsideration has been considered but does NOT place the application in condition for allowance because: See Continuation Sheet.
12. ☐ Note the attached Information *Disclosure Statement*(s). (PTO/SB/08) Paper No(s). _____
13. ☐ Other: _____.

/PATRICIA A LEITH/
Primary Examiner, Art Unit 1655

Continuation of 11. does NOT place the application in condition for allowance because: Applicants' arguments rely on the contention that the petition to accept an unintentionally delayed benefit claim has been accepted however, said petition has not been decided. Because the petition has not been decided, the claims remain rejected for the reasons of record set forth in the final office action..

UNITED STATES PATENT AND TRADEMARK OFFICE

Commissioner for Patents
United States Patent and Trademark Office
P.O. Box 1450
Alexandria, VA 22313-1450
www.uspto.gov

**DAVIS, BROWN, KOEHN, SHORS & ROBERTS, P.C.**
**THE DAVIS BROWN TOWER**
**215 10TH STREET SUITE 1300**
**DES MOINES IA 50309**

**MAILED**
SEP 08 2011
**OFFICE OF PETITIONS**

In re Application of:
AUSICH ET AL.
Serial No.: 10/426,678
Filed: April 30, 2003
Attorney Docket No.: 4532659/53450 (KEM 61)

DECISION ON PETITION

This is a decision on the petition under the unintentional provisions of 37 CFR 1.137(b), filed August 23, 2011, to revive the above-identified application.

The petition is **DISMISSED**.

Any request for reconsideration of this decision must be submitted within TWO (2) MONTHS from the mail date of this decision. Extensions of time under 37 CFR 1.136(a) are permitted. The reconsideration request should include a cover letter entitled "Renewed Petition under 37 CFR 1.137(b)." This is **not** a final agency action within the meaning of 5 U.S.C. § 704.

The application became abandoned for failure to timely file a reply within the meaning of 37 CFR 1.113 to the final Office action of October 28, 2010. The proposed reply required for consideration of a petition to revive must be a Notice of Appeal (and appeal fee required by 37 CFR 41.20(b)(2), an amendment that *prima facie* places the application in condition for allowance, a Request for Continued Examination and submission (37 CFR 1.114), or the filing of a continuing application under 37 CFR 1.53(b). See MPEP 711.03(c)(III)(A)(2). A one month extension of time pursuant to the provisions of 37 CFR 1.136(a) was obtained. Accordingly, the date of abandonment of this application is February 28, 2011.

The petition does not satisfy the requirements of 37 CFR 1.137(b). The proposed reply in the form of an Amendment and Response after final Office action was duly considered by the examiner and does not *prima facie* places the application in condition for allowance. The examiner has indicated in the advisory Office action that the proposed amendment to add a new claim and to claim priority to a prior nonprovisional application would raise new issues and require further consideration and/or search. Since the amendment submitted does not *prima facie*

place the application in condition for allowance, the reply required must be a Notice of Appeal (and appeal fee), RCE, or the filing of a continuing application under 37 CFR 1.53(b).

It is not apparent whether the person signing the statement of unintentional delay was in a position to have firsthand or direct knowledge of the facts and circumstances of the delay at issue. There is no indication that the person signing the petition was ever given a power of attorney to prosecute the application. Nevertheless, such statement is being treated as having been made as the result of a reasonable inquiry into the facts and circumstances of such delay. See 37 CFR 10.18(b) and Changes to Patent Practice and Procedure; Final Rule Notice, 62 Fed. Reg. 53131, 53178 (October 10, 1997), 1203 Off. Gaz. Pat. Office 63, 103 (October 21, 1997). In the event that such an inquiry has not been made, petitioner must make such an inquiry. If such inquiry results in the discovery that it is not correct that the entire delay in filing the required reply from the due date for the reply until the filing of a grantable petition pursuant to 37 CFR 1.137(b) was unintentional, petitioner must notify the Office.

Therefore, the petition does not satisfy the requirements of 37 CFR 1.137(b) and the application remains abandoned.

Further correspondence with respect to this matter should be addressed as follows:

By mail: Mail Stop PETITIONS
Commissioner for Patents
Post Office Box 1450
Alexandria, VA 22313-1450

By hand: Customer Service Window
Mail Stop Petitions
Randolph Building
401 Dulany Street
Alexandria, VA 22314

By fax: (571) 273-8300
ATTN: Office of Petitions

Any questions concerning this matter may be directed to Jose' G Dees at (571) 272-1569.

Christopher Bottorff
Petitions Examiner
Office of Petitions

Attachment: Advisory Action

| Advisory Action Before the Filing of an Appeal Brief | Application No. 10/426,678 | Applicant(s) AUSICH ET AL. |
|---|---|---|
| | Examiner PATRICIA A. LEITH | Art Unit 1655 |

***--The MAILING DATE of this communication appears on the cover sheet with the correspondence address --***

THE REPLY FILED 23 August 2011 FAILS TO PLACE THIS APPLICATION IN CONDITION FOR ALLOWANCE.

1. ☐ The reply was filed after a final rejection, but prior to or on the same day as filing a Notice of Appeal. To avoid abandonment of this application, applicant must timely file one of the following replies: (1) an amendment, affidavit, or other evidence, which places the application in condition for allowance; (2) a Notice of Appeal (with appeal fee) in compliance with 37 CFR 41.31; or (3) a Request for Continued Examination (RCE) in compliance with 37 CFR 1.114. The reply must be filed within one of the following time periods:
   a) ☐ The period for reply expires _____months from the mailing date of the final rejection.
   b) ☒ The period for reply expires on: (1) the mailing date of this Advisory Action, or (2) the date set forth in the final rejection, whichever is later. In no event, however, will the statutory period for reply expire later than SIX MONTHS from the mailing date of the final rejection.

   Examiner Note: If box 1 is checked, check either box (a) or (b). ONLY CHECK BOX (b) WHEN THE FIRST REPLY WAS FILED WITHIN TWO MONTHS OF THE FINAL REJECTION. See MPEP 706.07(f).

Extensions of time may be obtained under 37 CFR 1.136(a). The date on which the petition under 37 CFR 1.136(a) and the appropriate extension fee have been filed is the date for purposes of determining the period of extension and the corresponding amount of the fee. The appropriate extension fee under 37 CFR 1.17(a) is calculated from: (1) the expiration date of the shortened statutory period for reply originally set in the final Office action; or (2) as set forth in (b) above, if checked. Any reply received by the Office later than three months after the mailing date of the final rejection, even if timely filed, may reduce any earned patent term adjustment. See 37 CFR 1.704(b).

NOTICE OF APPEAL

2. ☐ The Notice of Appeal was filed on _____. A brief in compliance with 37 CFR 41.37 must be filed within two months of the date of filing the Notice of Appeal (37 CFR 41.37(a)), or any extension thereof (37 CFR 41.37(e)), to avoid dismissal of the appeal. Since a Notice of Appeal has been filed, any reply must be filed within the time period set forth in 37 CFR 41.37(a).

AMENDMENTS

3. ☒ The proposed amendment(s) filed after a final rejection, but prior to the date of filing a brief, will not be entered because
   (a) ☒ They raise new issues that would require further consideration and/or search (see NOTE below);
   (b) ☐ They raise the issue of new matter (see NOTE below);
   (c) ☒ They are not deemed to place the application in better form for appeal by materially reducing or simplifying the issues for appeal; and/or
   (d) ☐ They present additional claims without canceling a corresponding number of finally rejected claims.

   NOTE: _____. (See 37 CFR 1.116 and 41.33(a)).
4. ☐ The amendments are not in compliance with 37 CFR 1.121. See attached Notice of Non-Compliant Amendment (PTOL-324).
5. ☐ Applicant's reply has overcome the following rejection(s): _____.
6. ☐ Newly proposed or amended claim(s) _____ would be allowable if submitted in a separate, timely filed amendment canceling the non-allowable claim(s).
7. ☒ For purposes of appeal, the proposed amendment(s): a) ☒ will not be entered, or b) ☐ will be entered and an explanation of how the new or amended claims would be rejected is provided below or appended.
   The status of the claim(s) is (or will be) as follows:
   Claim(s) allowed: _____.
   Claim(s) objected to: _____.
   Claim(s) rejected: *1,5,7,16,17 and 35*.
   Claim(s) withdrawn from consideration: _____.

AFFIDAVIT OR OTHER EVIDENCE

8. ☐ The affidavit or other evidence filed after a final action, but before or on the date of filing a Notice of Appeal will not be entered because applicant failed to provide a showing of good and sufficient reasons why the affidavit or other evidence is necessary and was not earlier presented. See 37 CFR 1.116(e).
9. ☐ The affidavit or other evidence filed after the date of filing a Notice of Appeal, but prior to the date of filing a brief, will not be entered because the affidavit or other evidence failed to overcome all rejections under appeal and/or appellant fails to provide a showing a good and sufficient reasons why it is necessary and was not earlier presented. See 37 CFR 41.33(d)(1).
10. ☐ The affidavit or other evidence is entered. An explanation of the status of the claims after entry is below or attached.

REQUEST FOR RECONSIDERATION/OTHER

11. ☒ The request for reconsideration has been considered but does NOT place the application in condition for allowance because: See Continuation Sheet.
12. ☐ Note the attached Information *Disclosure Statement*(s). (PTO/SB/08) Paper No(s). _____
13. ☐ Other: _____.

/PATRICIA A LEITH/
Primary Examiner, Art Unit 1655

Continuation of 11. does NOT place the application in condition for allowance because: Applicants' arguments rely on the contention that the petition to accept an unintentionally delayed benefit claim has been accepted however, said petition has not been decided. Because the petition has not been decided, the claims remain rejected for the reasons of record set forth in the final office action..

UNITED STATES PATENT AND TRADEMARK OFFICE

Commissioner for Patents
United States Patent and Trademark Office
P.O. Box 1450
Alexandria, VA 22313-1450
www.uspto.gov

**MAILED**

SEP 14 2010

**OFFICE OF PETITIONS**

**CASIMIR JONES, S.C.**
**2275 DEMING WAY, SUITE 310**
**MIDDLETON WI 53562**

| | | |
|---|---|---|
| In re Patent No: 7,572,788 | : | |
| Issued: August 11, 2009 | : | |
| Application No. 10/427,211 | : | ON PETITION |
| Filed: May 1, 2003 | : | |
| Attorney Docket No. UM-07884 | : | |

This is a notice regarding your request for acceptance of a fee deficiency submission under 37 CFR 1.28. On September 1, 1998, the Court of Appeals for the Federal Circuit held that 37 CFR 1.28(c) is the sole provision governing the time for correction of the erroneous payment of the issue fee as a small entity. **See DH Technology v. Synergystex International, Inc. 154 F.3d 1333, 47 USPQ2d 1865 (Fed. Cir. Sept. 1, 1998).**

The Office no longer investigates or rejects original or reissue applications under 37 CFR 1.56. **1098 Off. Gaz. Pat. Office 502 (January 3, 1989).** Therefore, nothing in this Notice is intended to imply that an investigation was done.

Your fee deficiency submission under 37 CFR 1.28 is hereby **ACCEPTED**.

This patent is no longer entitled to small entity status. Accordingly, all future fees paid in this patent must be paid at the large entity rate.

Telephone inquires concerning this decision should be directed to the undersigned at (571) 272-7751.

Joan Olszewski
Petitions Examiner
Office of Petitions

UNITED STATES PATENT AND TRADEMARK OFFICE

Commissioner for Patents
United States Patent and Trademark Office
P.O. Box 1450
Alexandria, VA 22313-1450
www.uspto.gov

**BLACK LOWE & GRAHAM, PLLC**
**701 FIFTH AVENUE**
**SUITE 4800**
**SEATTLE, WA 98104**

MAILED
FEB 25 2011
OFFICE OF PETITIONS

| | | |
|---|---|---|
| In re Application of<br>Wallace et al.<br>Application No. 10/427,343<br>Filed: April 30, 2003<br>Attorney Docket No. 3301-0001 | :<br>:<br>:<br>:<br>: | DECISION ON PETITION<br>TO WITHDRAW FROM RECORD |

This is a decision on the Request to Withdraw as attorney or agent of record under 37 C.F.R. § 1.36(b), filed January 18, 2011.

The request is **NOT APPROVED** because it is moot.

A review of the file record indicates that on February 22, 2011 the power of attorney to Black Lowe & Graham, PLLC was revoked by the assignee of the patent application. Accordingly, the request to withdraw under 37 C.F.R. § 1.36(b) is moot.

All future communications from the Office will be directed to the address listed below until otherwise notified by applicant.

Telephone inquires concerning this decision should be directed to the undersigned at 571-272- 7751. All other inquires concerning either the examination or status of the application should be directed to the Technology Center.

Joan Olszewski
Petitions Examiner
Office of Petitions

cc: MARGER JOHNSON & MCCOLLOM, P.C.
210 SW MORRISON STREET, SUITE 400
PORTLAND OR 97204

UNITED STATES PATENT AND TRADEMARK OFFICE

Commissioner for Patents
United States Patent and Trademark Office
P.O. Box 1450
Alexandria, VA 22313-1450
www.uspto.gov
DIW Nov-10

CATHERINE ROSE WHITE
P.O. BOX 29462
LOS ANGELES CA 90029

MAILED
NOV 23 2010
OFFICE OF PETITIONS

| | | |
|---|---|---|
| In re Application of | : | |
| Catherine White | : | |
| Application Number: 10/427437 | : | LETTER |
| Filing Date: 04/30/2003 | : | |
| For: SOLAR POWERED TRANSPORTER | : | |
| WITH STABILIZED SPEED CONTROL | : | |
| AND CLUTCH CONTROLLED STEERING | | |

This is a communication in response to the letter filed on September 10, 2010.

As stated previously, the application became abandoned on July 31, 2004, for failure to timely file a response to the non-final Office action mailed on April 30, 2004. A grantable petition to revive the application must be filed before the application can be further examined.

A grantable petition filed under the provisions of 37 CFR 1.137(b) must be accompanied by:

**(1) the required reply, unless previously filed. In a nonprovisional application abandoned for failure to prosecute, the required reply may be met by the filing of a continuing application. In a nonprovisional application filed on or after June 8, 1995, and abandoned for failure to prosecute, the required reply may also be met by the filing of a request for continued examination in compliance with § 1.114. In an application or patent, abandoned or lapsed for failure to pay the issue fee or any portion thereof, the required reply must be the payment of the issue fee or any outstanding balance thereof. In an application abandoned for failure to pay the publication fee, the required reply must include payment of the publication fee.**

**(2) the petition fee as set forth in 37 CFR 1.17(m);**

(3) **a statement that the entire delay in filing the required reply from the due date for the reply until the filing of a grantable petition pursuant to 37 CFR 1.137(b) was unintentional. The Director may required additional information where there is a question whether the delay was unintentional; and**

(4) any terminal disclaimer (and fee as set forth in 37 CFR 1.20(d)) required pursuant to 37 CFR 1.137(c)).

Petitioner is reminded that MPEP 711.03(c) states that a delay resulting from a deliberately chosen course of action on the part of the applicant does not become an "unintentional" delay within the meaning of 37 CFR 1.137(b) because: (A) the applicant does not consider the claims to be patentable over the references relied upon in an outstanding Office action. If petitioner decided not to pursue timely reviving the application because petitioner did not believe the subject matter of the application to be patentable, such delay would be intentional, rather than unavoidable.

Petitioner was apprised in the letter mailed on March 12, 2010, of the need for a grantable petition, including a reply, and the fee, in order to continue prosecution of the application. Failure to submit these items may be considered intentional delay.

**Nevertheless, should petitioner decide to file a petition under 37 CFR 1.137(b), a petition fee of $810.00[1] and the petition form PTO/SB/64, would be required to be filed, along with a reply to the outstanding Office action. A copy of the Office action was mailed with the decision mailed on September 9, 2009. A duplicate copy of this Office action, as well as a copy of the petition form, are being mailed with this decision.**

It appears that applicant is unfamiliar with practice before the USPTO. It is recommended that applicant consult with a registered patent practitioner when filing papers in the Office.

A courtesy copy of this decision will be mailed to the address in the petition. All future correspondence, however, will be mailed solely to the address of record.

---

[1] As Office fees are revised from time to time, application may wish to visit the USPTO at www.uspto.gov or by phone at 1-800-PTO-9199 to verify fee information prior to submission of a petition.

Further correspondence with respect to this matter should be addressed as follows:

By mail: Mail Stop Petition
Commissioner for Patents
P.O. Box 1450
Alexandria, VA 22313-1450

By FAX: (571) 273-8300
Attn: Office of Petitions

By hand: Customer Service Window
Mail Stop Petition
Randolph Building
401 Dulany Street
Alexandria, VA 22314

A reply may also be filed via the EFS-Web system of the USPTO.

Telephone inquiries concerning this matter may be directed to the undersigned at (571) 272-3231.

D Wood

Douglas I. Wood
Senior Petitions Attorney
Office of Petitions

Encl: PTO/SB/64
Office action mailed on April 30, 2004

UNITED STATES PATENT AND TRADEMARK OFFICE

UNITED STATES DEPARTMENT OF COMMERCE
United States Patent and Trademark Office
Address: COMMISSIONER FOR PATENTS
P.O. Box 1450
Alexandria, Virginia 22313-1450
www.uspto.gov

| APPLICATION NO. | FILING DATE | FIRST NAMED INVENTOR | ATTORNEY DOCKET NO. | CONFIRMATION NO. |
|---|---|---|---|---|
| 10/427,437 | 04/30/2003 | Catherine White | White.C-15 | 7643 |

22197 7590 04/30/2004

GENE SCOTT; PATENT LAW & VENTURE GROUP
3140 RED HILL AVENUE
SUITE 150
COSTA MESA, CA 92626-3440

| EXAMINER |
|---|
| KLEBE, GERALD B |

| ART UNIT | PAPER NUMBER |
|---|---|
| 3618 | |

DATE MAILED: 04/30/2004

Please find below and/or attached an Office communication concerning this application or proceeding.

| Office Action Summary | Application No. | Applicant(s) |
|---|---|---|
| | 10/427,437 | WHITE, CATHERINE |
| | Examiner | Art Unit |
| | Gerald B. Klebe | 3618 |

KB

*-- The MAILING DATE of this communication appears on the cover sheet with th correspondence address --*

**Period for Reply**

A SHORTENED STATUTORY PERIOD FOR REPLY IS SET TO EXPIRE 3 MONTH(S) FROM THE MAILING DATE OF THIS COMMUNICATION.

- Extensions of time may be available under the provisions of 37 CFR 1.136(a). In no event, however, may a reply be timely filed after SIX (6) MONTHS from the mailing date of this communication.
- If the period for reply specified above is less than thirty (30) days, a reply within the statutory minimum of thirty (30) days will be considered timely.
- If NO period for reply is specified above, the maximum statutory period will apply and will expire SIX (6) MONTHS from the mailing date of this communication.
- Failure to reply within the set or extended period for reply will, by statute, cause the application to become ABANDONED (35 U.S.C. § 133). Any reply received by the Office later than three months after the mailing date of this communication, even if timely filed, may reduce any earned patent term adjustment. See 37 CFR 1.704(b).

**Status**

1)☒ Responsive to communication(s) filed on 30 April 2003.

2a)☐ This action is **FINAL**. 2b)☒ This action is non-final.

3)☐ Since this application is in condition for allowance except for formal matters, prosecution as to the merits is closed in accordance with the practice under *Ex parte Quayle*, 1935 C.D. 11, 453 O.G. 213.

**Disposition of Claims**

4)☒ Claim(s) 1-9 is/are pending in the application.

4a) Of the above claim(s) _____ is/are withdrawn from consideration.

5)☐ Claim(s) _____ is/are allowed.

6)☒ Claim(s) 1-9 is/are rejected.

7)☐ Claim(s) _____ is/are objected to.

8)☐ Claim(s) _____ are subject to restriction and/or election requirement.

**Application Papers**

9)☒ The specification is objected to by the Examiner.

10)☒ The drawing(s) filed on 28 July 2003 is/are: a)☒ accepted or b)☐ objected to by the Examiner.

Applicant may not request that any objection to the drawing(s) be held in abeyance. See 37 CFR 1.85(a).

Replacement drawing sheet(s) including the correction is required if the drawing(s) is objected to. See 37 CFR 1.121(d).

11)☐ The oath or declaration is objected to by the Examiner. Note the attached Office Action or form PTO-152.

**Priority under 35 U.S.C. § 119**

12)☐ Acknowledgment is made of a claim for foreign priority under 35 U.S.C. § 119(a)-(d) or (f).

a)☐ All b)☐ Some * c)☐ None of:

1.☐ Certified copies of the priority documents have been received.

2.☐ Certified copies of the priority documents have been received in Application No. _____.

3.☐ Copies of the certified copies of the priority documents have been received in this National Stage application from the International Bureau (PCT Rule 17.2(a)).

* See the attached detailed Office action for a list of the certified copies not received.

GBKlebe 20 April 04

**Attachment(s)**

1) ☒ Notice of References Cited (PTO-892)

2) ☐ Notice of Draftsperson's Patent Drawing Review (PTO-948)

3) ☐ Information Disclosure Statement(s) (PTO-1449 or PTO/SB/08) Paper No(s)/Mail Date _____.

4) ☐ Interview Summary (PTO-413) Paper No(s)/Mail Date. _____.

5) ☐ Notice of Informal Patent Application (PTO-152)

6) ☐ Other: _____.

## DETAILED ACTION

### *Information Disclosure Statement*

1. The listing of references in the specification is not a proper information disclosure statement. 37 CFR 1.98(b) requires a list of all patents, publications, or other information submitted for consideration by the Office, and MPEP § 609 A(1) states, "the list may not be incorporated into the specification but must be submitted in a separate paper." Therefore, unless the references have been cited by the examiner on form PTO-892, they have not been considered. Should applicant wish these references to be printed on a patent issuing from this application, a Form PTO-1449, "List of Prior Art cited by Applicant", listing these references must be provided in accordance with requirements set forth in 37 CFR 1.97, 1.98, and MPEP Section 609.

### *Drawings*

2. The drawings are objected to for the following informalities:

Figure 4 shows a quantity Vset which is not described anywhere in the disclosure. Appropriate correction is required.

3. The drawings are objected to under 37 CFR 1.83(a). The drawings must show every feature of the invention specified in the claims. Therefore,

a) the potentiometers recited in claim 4 and in claim 8 as being mounted on the handlebar must be shown or the feature(s) canceled from the claim(s); and

b) the Rf resistor recited in claim 5 and in claim 9 in combination with the capacitor Cf must be shown or the feature(s) canceled from the claim(s).

No new matter should be entered.

A proposed drawing correction or corrected drawings are required in reply to the Office action to avoid abandonment of the application. The objection to the drawings will not be held in abeyance.

***Abstract***

4. The Abstract is objected to for the following informalities:

line 3: the phrase "of the" appears to be a typographical error and should be deleted.

Appropriate correction or clarification is required.

***Specification - Objections***

5. The specification is objected to for the following informalities:

page 7, line 7 refers to quantity Rf in Figure 4; however, no such quantity appears in the figure.

***Claims Rejections - 35 U.S.C. § 112***

6. The following is a quotation of the second paragraph of 35 U.S.C. 112:

> The specification shall conclude with one or more claims particularly pointing out and distinctly claiming the subject matter which the applicant regards as his invention.

7. Claim 2 is rejected under 35 U.S.C. 112, second paragraph, as being indefinite for failing to particularly point out and distinctly claim the subject matter which applicant regards as the invention. Claim 2 recites the limitation "castor type wheel". The recitation "castor type" renders the claim indefinite because the claim includes elements not actually disclosed (those encompassed by "castor type") thereby rending the scope of the claim unascertainable. See MPEP § 2173.05(d).

### *Claims Rejections - 35 U.S.C. § 103*

8. The following is a quotation of 35 U.S.C. 103(a) which forms the basis for all obviousness rejections set forth in this Office action:

> (a) A patent may not be obtained though the invention is not identically disclosed or described as set forth in section 102 of this title, if the differences between the subject matter sought to be patented and the prior art are such that the subject matter as a whole would have been obvious at the time the invention was made to a person having ordinary skill in the art to which said subject matter pertains. Patentability shall not be negatived by the manner in which the invention was made.

9. Claims 1 and 3-5 are rejected under 35 U.S.C. 103(a) as being unpatentable over Catto (US 5894898), cited by Applicant in view of Andruet (US 5004061) in further view of Lin (US 6679343 B2).

a. Catto discloses an apparatus comprising: **(re: claim 1)** a platform (Fig 1, item 1) for supporting a person standing on the platform (refer col 2, lines 35-46); a plurality of wheels (3, 4, and 21) engaging the platform in rolling motion; a handlebar (6) extending upwardly from the platform for stabilizing the person and for controlling speed of two of the wheels (refer col 3, lines 46-47 and lines 62-67; and col 4, lines 1-9); and an electrical circuit engaging the apparatus (Fig 12, and associated text); the electrical circuit comprising components of: (Figs 3 and 12) a battery (14), a plurality of solar cells (12) fixed exteriorly to the platform; an electric motor (16) engaged with the wheels; and a means for motor speed control (refer col 2, lines 42-46); the motor speed control means including the electrical circuit components interconnected for charging the battery and driving the two of the wheels (although only one of the wheels is driven in the embodiment shown, both of the rear wheels may be driven; refer col 5, lines 21-23).

b. **Regarding the further feature of claim 1,** Catto lacks explicit disclosure of the motor speed control means including dual operational amplifiers in a push-pull configuration.

However, Andruet teaches an electric motor powered vehicle wherein the motor control system controls the wheel drive motors using a control circuit (75; refer Figures 5 and 6, and column 8, lines 29ff) including dual operational amplifiers in a push-pull configuration (refer Fig 5, and associated text) to control the wheel drive motors. Therefore, it would have been obvious to one of ordinary skill in the art at the time the instant invention was made to have modified the disclosure of Catto as regards the motor circuit components to have explicitly disclosed the motor control circuit to include dual operational amplifiers in a push-pull configuration for motor control in accordance with the teachings of Andruet as a conventional method of controlling two motors of the same axle set to obtain the speed differential effect between the two motors as needed to accomplish steering-by-driving as suggested by the reference at column 8, lines 27ff.

c. **Regarding the further feature of claim 1** wherein the motor control means includes a tachometer and a potentiometer input, **and the feature of claim 4** wherein the potentiometers are mounted on the handlebar, Lin teaches a control device for an electric apparatus of a motor driven wheeled platform for supporting a person standing on the platform wherein the motor speed control means includes a potentiometer input (12) drawing power from the battery mounted on the handlebar. Regarding the tachometer, Lin is silent, however, the examiner takes Official Notice that it is old and well-known in the art to provide tachometer in the visual field of view of operators controlling the speed of a vehicle. Therefore, it would have been obvious to one of ordinary skill in the art at the time the instant invention was made to have modified the motor control means of Catto to include tachometer and potentiometer inputs in accordance with the teachings of Lin in order to locate them in a place on the apparatus easily accessible and visible to the operator.

d. **Regarding the further feature of claim 1** wherein solar cells are also fixed exteriorly to the handle bar, it would have been obvious to one of ordinary skill in the art at the time the instant invention was made to have provided additional solar cells mounted at various exterior locations on the apparatus since it has been held that mere duplication of the essential working parts of a device involves only routine skill in the art. *St. Regis Paper Co. v. Bemis Co.*, 193 USPQ 8.

e. **Regarding the feature of claim 3** wherein the op amps are ULN3755W, the op amps (Fig 5 items 57 and 63) used in the motor control circuit of Andruet are not identified specifically; however, it would have been obvious to one of ordinary skill in the art at the time the instant invention was made to have used ULN3755W op amps as a matter of design choice depending upon the specific electrical and electronic characteristics of the wheel drive motor(s) , since it has been held that where the general conditions of a claim are disclosed in the prior art, discovering the optimum or workable ranges involves only routine skill in the art. *In re Aller*, 105 USPQ 233.

f. **Regarding the feature of claim 5** wherein the RfCf time-constant of the push-pull circuit is selected to prevent system oscillation by compensating for inherent dynamic mechanical lag in the motor(s), Andruet selects time constants for the circuit for a number of different variants (for example, refer col 2, line 63 to col 4, line 14 where he discusses a variant aimed at producing a braking effect for the vehicle); therefore, it would have been obvious to one of ordinary skill in the art at the time the instant invention was made to have selected the RfCf time constant for the push-pull circuit to be any number of useful values as a design choice dependent upon the electronic characteristics of the motor(s) being controlled in order to provide

an acceptable drive response behavior in environments in which the vehicle was expected to be used, since it has been held that where the general conditions of a claim are disclosed in the prior art, discovering the optimum or workable ranges involves only routine skill in the art. *In re Aller*, 105 USPQ 233.

10. Claim 2 is rejected under 35 U.S.C. 103(a) as being unpatentable over Catto (US 5894898), cited by Applicant, in view of Andruet (US 5004061) and Lin (US 6679343 B2), and further in view of Kiffe (US 5161635).

As discussed above, the combination of Catto, Andruet and Lin disclose all the features of the invention of claim 1 from which claim 2 depends.

The combination of Catto, Andruet and Lin fails to teach an electric motor drive apparatus wherein the forward pair of wheels are caster wheels.

However, Kiffe teaches a motor driven vehicle using a pair of casters as the front wheels.

Therefore, it would have been obvious to one of ordinary skill in the art to substitute the dual caster wheels of Kiffe for the single front wheel of the combination of Catto, Andruet and Lin in order to provide a safety redundancy against blowout of the front wheel.

11. Claims 6-9 are rejected under 35 U.S.C. 103(a) as being unpatentable over Lautzenhiser et al. (US 5012165) in view of Weisz (US 6494278).

a. Lautzenhizer et al. discloses an apparatus (10) comprising: a platform (combination 14, 16 and 18; refer col 6, lines 60-67); the platform mounted on two caster wheels (19a, b) forward, and two drive wheels (12a, b) rearwardly; the plurality of wheels engaging the platform in rolling motion; a handlebar extending upwardly from the platform (taken as the armrest including control arm 54, shown in Figs 1-2); and an electrical circuit engaging the

apparatus (Figs 5-12); the electrical circuit comprising components: a battery (60), and electric motor (26a, 26b) engaged with two of the wheels and a means for motor speed control; the motor speed control means including dual operational amplifiers (104, 106) in push-pull configuration (refer col 8, lines 59-61), and a potentiometer input (Fig 9, items 76a, b) drawing power from the battery (refer col 7, lines 55-57); the electrical circuit components interconnected for charging the battery (refer col 10, lines 28-35) and for driving the two of the wheels; and **(re: claim 8 )** wherein the potentiometer controlling the vehicle speed is mounted on the handlebar (Figs 1-2, item 54; and refer col 8, lines 9-16). Lautzenhizer is silent regarding provision of a tachometer functionally engaged for speed stabilizing; however, the examiner takes Official Notice that it is old and well-known in the art to provide a tachometer as part of the instrument cluster in the visual field of the operator for use in aiding the control of the speed of land vehicles.

b. **Relative to the further feature of claim 6,** Lautzenhizer et al. lacks electric clutches.

c. However, **(re: the feature of claim 6)** Weisz teaches an electric wheelchair drive system using electric-controlled clutches in combination with wheel-hub electric motors (refer Fig 6, and associated text); and **(re: claim 7)** wherein the clutches are interconnected for disengagement by a control mounted on the handlebar (refer Fig 8).

d. Therefore, it would have been obvious to one of ordinary skill in the art at the time the instant invention was made to have modified the wheelchair electric drive system of Lautzenhizer et al. to engage the two drive wheels of the apparatus with the electric motors operating through electric clutches in accordance with the teachings of Weisz in order to provide a wheel drive mechanical connection that can be readily removed from the vehicle, which is less

likely to apply excessive stresses to the frame of the vehicle and which permits improved control of the motor of the wheel, as suggested by the reference at column 1, lines 39-44.

e. **Regarding the feature of claim 9** wherein the RfCf time-constant of the push-pull circuit is selected to prevent system oscillation by compensating for inherent dynamic mechanical lag in the motor(s), Lautzenhizer et al. selects time constants for the circuit for a number of different reasons (for example, refer col 11, lines 1-35 where these are adjusted as a part of the means for controlling the maximum power that is supplied to the electric motors by controlling the modulation of the pulse-width of the power signal and hence the current sent to the motors; as another example, these are adjusted dynamically to cause the motor to function as a generator and thereby provide dymamic braking of a wheel as discussed at col 11, line 46 to col 12, line 19); therefore, it would have been obvious to one of ordinary skill in the art at the time the instant invention was made to have selected the RfCf time constant for the push-pull circuit to be any number of useful values as a design choice dependent upon the electronic characteristics of the motor(s) being controlled in order to provide an acceptable drive response behavior in environments in which the vehicle was expected to be used, since it has been held that where the general conditions of a claim are disclosed in the prior art, discovering the optimum or workable ranges involves only routine skill in the art. *In re Aller*, 105 USPQ 233.

***Prior Art made of Record***

12. The prior art made of record and not relied upon is considered pertinent to Applicant's disclosure. The prior art of Ahsing et al. teaches a motorized wheelchair with motor control circuit comprising operational amplifiers, tachometer and potentiometer; Cragg teaches a motorized wheelchair wherein the drive is engaged/disengaged by pivoting the wheel drive gear

away from a pinion gear of the motor; Biddle teaches a motorized wheelchair with drive wheels at the front; Bradt teaches an electric motor drive golf cart; Hawkins teaches a motoized carrying cart; Inman teaches a motorized pallet truck with motor-driven wheels at the rear and casters at the front; Read teaches a motor control electronic system for an electric drive vehicle that employs operational amplifiers in push-pull configurations, potentiometer speed controller; and having a tachometer; Yamaha Motor Co. teaches clutch connection between the drive motor and wheel of an electric vehicle.

***Conclusion***

13. Any inquiry concerning this or earlier communication(s) from the examiner should be directed to Gerald B. Klebe at 703-305-0578, fax 703-872-9306; Mon.-Fri., 8:00 AM - 4:30 PM ET, or to Supervisory Patent Examiner Brian L. Johnson, Art Unit 3618, at 703-308-0885.

Note that the examiner's fax number has changed.

Official correspondence should be sent to the following TC 3600 Official Rightfax numbers as follows: Regular correspondence: 703-872-9326; After Finals: 703-872-9327; Customer Service: 703-872-9325.

Information regarding the status of an application may be obtained from the Patent Application Information Retrieval (PAIR) system. Status information for published applications may be obtained from either Private PAIR or Public PAIR. Status information for unpublished applications is available through Private PAIR only. For more information about the PAIR system, see http://pair-direct.uspto.gov. Should you have questions on access to the Private PAIR system, contact the Electronic Business Center (EBC) at 866-217-9197 (toll-free).

gbklebe / Art Unit 3618 / 20 April 2004

BRIAN L. JOHNSON
SUPERVISORY PATENT EXAMINER
TECHNOLOGY CENTER 3600

4/26/04

UNITED STATES PATENT AND TRADEMARK OFFICE

Commissioner for Patents
United States Patent and Trademark Office
P.O. Box 1450
Alexandria, VA 22313-1450
www.uspto.gov
DIW Mar-11

CATHERINE ROSE WHITE
P.O. BOX 29462
LOS ANGELES CA 90029

MAILED
MAR 02 2011
OFFICE OF PETITIONS

| | | |
|---|---|---|
| In re Application of | : | |
| Catherine White | : | |
| Application Number: 10/427437 | : | LETTER |
| Filing Date: 04/30/2003 | : | |
| For: SOLAR POWERED TRANSPORTER | : | |
| WITH STABILIZED SPEED CONTROL | : | |
| AND CLUTCH CONTROLLED STEERING | | |

This is a communication in response to the letter filed on December 21, 2010.

As stated previously, the application became abandoned on July 31, 2004, for failure to timely file a response to the non-final Office action mailed on April 30, 2004. A grantable petition to revive the application must be filed before the application can be further examined.

A grantable petition filed under the provisions of 37 CFR 1.137(b) must be accompanied by:

**(1) the required reply, unless previously filed. In a nonprovisional application abandoned for failure to prosecute, the required reply may be met by the filing of a continuing application. In a nonprovisional application filed on or after June 8, 1995, and abandoned for failure to prosecute, the required reply may also be met by the filing of a request for continued examination in compliance with § 1.114. In an application or patent, abandoned or lapsed for failure to pay the issue fee or any portion thereof, the required reply must be the payment of the issue fee or any outstanding balance thereof. In an application abandoned for failure to pay the publication fee, the required reply must include payment of the publication fee.**

**(2) the petition fee as set forth in 37 CFR 1.17(m);**

(3) **a statement that the entire delay in filing the required reply from the due date for the reply until the filing of a grantable petition pursuant to 37 CFR 1.137(b) was unintentional. The Director may required additional information where there is a question whether the delay was unintentional; and**

(4) any terminal disclaimer (and fee as set forth in 37 CFR 1.20(d)) required pursuant to 37 CFR 1.137(c)).

Petitioner is reminded that MPEP 711.03(c) states that a delay resulting from a deliberately chosen course of action on the part of the applicant does not become an "unintentional" delay within the meaning of 37 CFR 1.137(b) because: (A) the applicant does not consider the claims to be patentable over the references relied upon in an outstanding Office action. If petitioner decided not to pursue timely reviving the application because petitioner did not believe the subject matter of the application to be patentable, such delay would be intentional, rather than unavoidable.

Petitioner was apprised in the letter mailed on March 12, 2010, of the need for a grantable petition, including a reply, and the fee, in order to continue prosecution of the application. Failure to submit these items may be considered intentional delay.

**Nevertheless, should petitioner decide to file a petition under 37 CFR 1.137(b), a petition fee of $810.00[1] and the petition form PTO/SB/64, would be required to be filed, along with a reply to the outstanding Office action. A copy of the Office action was mailed with the decision mailed on September 9, 2009. A duplicate copy of this Office action, as well as a copy of the petition form, are being mailed with this decision.**

It appears that applicant is unfamiliar with practice before the USPTO. It is recommended that applicant consult with a registered patent practitioner when filing papers in the Office.

Further correspondence with respect to this matter should be addressed as follows:

---

[1] As Office fees are revised from time to time, application may wish to visit the USPTO at www.uspto.gov or by phone at 1-800-PTO-9199 to verify fee information prior to submission of a petition.

By mail: Mail Stop Petition
Commissioner for Patents
P.O. Box 1450
Alexandria, VA 22313-1450

By FAX: (571) 273-8300
Attn: Office of Petitions

By hand: Customer Service Window
Mail Stop Petition
Randolph Building
401 Dulany Street
Alexandria, VA 22314

A reply may also be filed via the EFS-Web system of the USPTO.

Telephone inquiries concerning this matter may be directed to the undersigned at (571) 272-3231.

DWood

Douglas I. Wood
Senior Petitions Attorney
Office of Petitions

Encl: PTO/SB/64
Office action mailed on April 30, 2004

UNITED STATES PATENT AND TRADEMARK OFFICE

Commissioner for Patents
United States Patent and Trademark Office
P.O. Box 1450
Alexandria, VA 22313-1450
www.uspto.gov
DIW Jun-11

CATHERINE ROSE WHITE
P.O. BOX 29462
LOS ANGELES CA 90029

MAILED
JUN 14 2011
OFFICE OF PETITIONS

| | | |
|---|---|---|
| In re Application of | : | |
| Catherine White | : | |
| Application Number: 10/427,437 | : | ON PETITION |
| Filing Date: 04/30/2003 | : | |
| Attorney Docket Number: | : | |
| White.C-15 | : | |

This is a decision on the petition under 37 CFR 1.137(b), filed on May 2, 2011.

The petition is **DISMISSED**.

Any request for reconsideration of this decision must be submitted within TWO (2) MONTHS from the mail date of this decision. Extensions of time under 37 CFR 1.136(a) are permitted. The reconsideration request should include a cover letter entitled "Renewed Petition under 37 CFR 1.137(b)." This is **not** a final agency action within the meaning of 5 U.S.C. § 704.

The above-identified application became abandoned on July 31, 2004, for failure to timely file a response to the non-final Office action mailed on April 30, 2004. Notice of Abandonment was mailed on February 4, 2005. The petition under 37 CFR 1.137(a) filed on March 5, 2009, was dismissed on September 9, 2009.

A grantable petition filed under the provisions of 37 CFR 1.137(b) must be accompanied by:

(1) the required reply, unless previously filed. In a nonprovisional application abandoned for failure to prosecute, the required reply may be met by the filing of a continuing application. In a nonprovisional utility or plant application filed on or after June 8, 1995, and abandoned for failure to prosecute, the required reply may also be met by the filing of a request for continuing examination in compliance with § 1.114. In an application or patent, abandoned or lapsed for failure to pay the issue fee or any portion thereof, the required reply must

be the payment of the issue fee or any outstanding balance thereof. In an application, abandoned for failure to pay the publication fee, the required reply must include payment of the publication fee.

(2) the petition fee as set forth in 37 CFR 1.17(m);

(3) a statement that the entire delay in filing the required reply from the due date for the reply until the filing of a grantable petition pursuant to 37 CFR 1.137(b) was unintentional. The Director may required additional information where there is a question whether the delay was unintentional; and

(4) any terminal disclaimer (and fee as set forth in 37 CFR 1.20(d)) required pursuant to 37 CFR 1.137(c)).

The petition lacks item (2).

Specifically, the petition fee has not been paid in the amount set forth in 37 CFR 1.17(m). The petition fee for a small entity is currently $810.00. On May 2, 2011, applicant submitted $270.00. Payment of the petition fee in the correct amount is a prerequisite to treatment of the petition on its merits.[1]

The balance due of $540.00 must be submitted with any renewed petition.

It is further noted that any amendments to the application must be in compliance with 37 CFR 1.121 and MPEP 714.

It appears that applicant is unfamiliar with practice before the USPTO. It is recommended that applicant consult with a registered patent practitioner when filing papers in the Office.

Further correspondence with respect to this matter should be addressed as follows:

By mail: Mail Stop Petition
Commissioner for Patents
P.O. Box 1450
Alexandria, VA 22313-1450

By FAX: (571) 273-8300
Attn: Office of Petitions

---

[1] See MPEP 711.03(c).

By hand: Customer Service Window
Mail Stop Petition
Randolph Building
401 Dulany Street
Alexandria, VA 22314

A reply may also be filed via the EFS-Web system of the USPTO.

Telephone inquiries concerning this matter may be directed to the undersigned at (571) 272-3231.

Douglas I. Wood
Senior Petitions Attorney
Office of Petitions

UNITED STATES PATENT AND TRADEMARK OFFICE

Commissioner for Patents
United States Patent and Trademark Office
P.O. Box 1450
Alexandria, VA 22313-1450
www.uspto.gov
DIW JJ-11

MAILED
AUG 01 2011
OFFICE OF PETITIONS

CATHERINE ROSE WHITE
P.O. BOX 29462
LOS ANGELES CA 90029

| | | |
|---|---|---|
| In re Application of<br>Catherine White<br>Application No. 10/427,437<br>Filed: 04/30/2003<br>Attorney Docket No. White.C-15 | :<br>:<br>:<br>:<br>:<br>: | ON PETITION |

This is a decision in response to the petition under 37 CFR 1.137(b) filed on June 24, 2011, to revive the above-identified application.

The petition is **GRANTED**.

This application became abandoned on July 31, 2004, for failure to timely submit a reply to the non-final Office action mailed on April 30, 2004, which set a three (3) month shortened statutory period for reply. No extensions of the time for reply in accordance with 37 CFR 1.136(a) were obtained. Notice of Abandonment was mailed on February 4, 2005.

Receipt of the reply filed on May 2, 2011 is acknowledged.

The application is being referred to Technology Center 3618 for further processing.

Telephone inquiries concerning this matter may be directed to the undersigned at (571) 272-3231.

DWood
Douglas I. Wood
Senior Petitions Attorney
Office of Petitions

UNITED STATES PATENT AND TRADEMARK OFFICE

Commissioner for Patents
United States Patent and Trademark Office
P.O. Box 1450
Alexandria, VA 22313-1450
www.uspto.gov

FAY SHARPE/LUCENT
1228 EUCLID AVENUE
5TH FLOOR
THE HALLE BUILDING
CLEVELAND OH 44115-1843

MAILED
MAR 09 2011
OFFICE OF PETITIONS

| | |
|---|---|
| In re Patent No. 7,590,917 | : DECISION ON |
| Barry, et al. | : REQUEST FOR RECONSIDERATION |
| Application No. 10/427,833 | : of PATENT TERM ADJUSTMENT |
| Issue Date: September 15, 2009 | : and |
| Filed: May 1, 2003 | : NOTICE OF INTENT TO ISSUE |
| Attorney Docket No. LUTZ 2 00426 | : CERTIFICATE OF CORRECTION |

This is a decision on the "Reply to Decision Dismissing Request for Recalculation of PTA in View of Wyeth", filed May 19, 2010, requesting that the patent term adjustment indicated on the above-identified patent be corrected.

The petition to correct the patent term adjustment indicated on the above-identified patent is **GRANTED.**

On September 15, 2009, the instant application matured into U.S. Patent No. 7,590,917 with a patent term adjustment of one thousand two hundred ninety-five (1295) days. The Office determined a patent term adjustment of 1295 days based upon 1295 days of Office delay pursuant to 37 CFR 1.703(a)(1), reduced by zero days of Applicant delay. Patentees filed a "Request for Reconsideration of PTA in View of Wyeth" on March 15, 2010. However, the request was dismissed in a decision mailed on April 21, 2010. The decision explained that the request was not timely filed within 180 days of the patent grant date. With the instant request for reconsideration, patentees point out that the request was timely filed pursuant to 37 CFR 1.7(a).

Patentees are correct that the proper amount of days over 36 months from the filing date of the application until the issue date of the patent was not included in the "B" delay period. The over three year period began on May 2, 2006 and ended on September 15, 2009 (the patent issue date), and is 1223 days. See 35 U.S.C. 154(b)(1)(B). As such, the "B" delay period is 1233 days, not 0 days as originally calculated. There are 626 days of overlap between "A" delay and "B" delay.

In view thereof, the correct number of days of patent term adjustment is **one thousand nine hundred two (1902)** days (1295 days of "A" delay and 1233 days of "B" delay, reduced by 0 days of Applicant delay and 626 days of overlap between "A" and "B" delay).

The application is being forwarded to the Certificate of Corrections Branch for issuance of a certificate of correction. The Office will issue a certificate of correction indicating that the term of the above-identified patent is extended or adjusted by **one thousand nine hundred two (1902) days.**

Telephone inquiries specific to this matter should be directed to Petitions Attorney Cliff Congo, at (571) 272-3207.

Anthony Knight
Director
Office of Petitions

Enclosure: Copy of DRAFT Certificate of Correction

UNITED STATES PATENT AND TRADEMARK OFFICE

# DRAFT CERTIFICATE OF CORRECTION

PATENT : 7,590,917 B2

DATED : **September 15, 2009**

INVENTOR(S) : Barry et al.

It is certified that error appears in the above-identified patent and that said Letters Patent is hereby corrected as shown below:

On the cover page,

[*] Notice: Subject to any disclaimer, the term of this patent is extended or adjusted under 35 USC 154(b) by 1295 days.

Delete the phrase "by 1295 days" and insert – by 1902 days--

UNITED STATES PATENT AND TRADEMARK OFFICE

Commissioner for Patents
United States Patent and Trademark Office
P.O. Box 1450
Alexandria, VA 22313-1450
www.uspto.gov

**KILPATRICK TOWNSEND & STOCKTON LLP**
**TWO EMBARCADERO CENTER**
**EIGHTH FLOOR**
**SAN FRANCISCO CA 94111-3834**

**MAILED**
APR 26 2011
**OFFICE OF PETITIONS**

| | | |
|---|---|---|
| In re Patent No. 7,233,340 | : | |
| Issued: June 19, 2007 | : | |
| Application No. 10/428,324 | : | ON PETITION |
| Filed: April 30, 2003 | : | |
| Attorney Docket No. 016249-009010US | : | |

This is a notice regarding your request for acceptance of a fee deficiency submission under 37 CFR 1.28 filed September 9, 2009.

On September 1, 1998, the Court of Appeals for the Federal Circuit held that 37 CFR 1.28(c) is the sole provision governing the time for correction of the erroneous payment of the issue fee as a small entity. **See DH Technology v. Synergystex International, Inc. 154 F.3d 1333, 47 USPQ2d 1865 (Fed. Cir. Sept. 1, 1998).**

The Office no longer investigates or rejects original or reissue applications under 37 CFR 1.56. **1098 Off. Gaz. Pat. Office 502 (January 3, 1989)**. Therefore, nothing in this Notice is intended to imply that an investigation was done.

Your fee deficiency submission under 37 CFR 1.28 is hereby **ACCEPTED**.

This patent is no longer entitled to small entity status. Accordingly, all future fees paid in this patent must be paid at the large entity rate.

Telephone inquires concerning this decision should be directed to the undersigned at (571) 272-7751.

/Joan Olszewski/
Joan Olszewski
Petitions Examiner
Office of Petitions

UNITED STATES PATENT AND TRADEMARK OFFICE

Commissioner for Patents
United States Patent and Trademark Office
P.O. Box 1450
Alexandria, VA 22313-1450
www.uspto.gov

**KILPATRICK TOWNSEND & STOCKTON LLP**
**TWO EMBARCADERO CENTER**
**EIGHTH FLOOR**
**SAN FRANCISCO CA 94111-3834**

MAILED
APR 29 2011
OFFICE OF PETITIONS

| | | |
|---|---|---|
| In re Patent No. 7,233,340 | : | |
| Issue Date: June 19, 2007 | : | |
| Application No. 10/428,324 | : | NOTICE |
| Filed: April 30, 2003 | : | |
| Attorney Docket No. 016249-009010US | : | |

This is a notice regarding your request for acceptance of a fee deficiency submission under 37 CFR 1.28 filed March 10, 2011.

On September 1, 1998, the Court of Appeals for the Federal Circuit held that 37 CFR 1.28(c) is the sole provision governing the time for correction of the erroneous payment of the issue fee as a small entity. **See DH Technology v. Synergystex International, Inc. 154 F.3d 1333, 47 USPQ2d 1865 (Fed. Cir. Sept. 1, 1998).**

The Office no longer investigates or rejects original or reissue applications under 37 CFR 1.56. **1098 Off. Gaz. Pat. Office 502 (January 3, 1989)**. Therefore, nothing in this Notice is intended to imply that an investigation was done.

Your fee deficiency submission under 37 CFR 1.28 is hereby **DISMISSED**.

The request under 37 CFR 1.28 cannot be accepted at this time since it appears that the petition is not signed by a person having authority to act in the above-identified patent.

Petitioner's attention is directed to 37 CFR 1.33(b), which states.

Amendments and other papers, except for written assertions pursuant to § 1.27(c)(2)(ii) of this part, filed in the application must be signed by:

(1) A registered patent attorney or patent agent of record appointed in compliance with § 1.32(b);
(2) A registered patent attorney or patent agent not of record who acts in a representative capacity under the provisions of § 1.34;
(3) An assignee as provided for under §3.71(b) of this chapter; or

(4) All of the applicants (§ 1.41(b)) for patent, unless there is an assignee of the entire interest and such assignee has taken action in the application in accordance with § 3.71 of this chapter.

Accordingly, the request cannot be accepted until it is signed by all inventors, an attorney or agent registered to practice before the U.S. Patent and Trademark Office or the assignee of the entire interest under 37 CFR 3.73(b).

Additionally, the address given on the petition differs from the address of record. A courtesy copy of this decision is being mailed to the address given on the petition; however, the Office will mail all future correspondence solely to the address of record.

Further correspondence with respect to this matter should be addressed as follows:

By Mail: Mail Stop PETITIONS
Commissioner for Patents
Post Office Box 1450
Alexandria, VA 22313-1450

By hand: U.S. Patent and Trademark Office
Customer Service Window, Mail Stop Petitions
Randolph Building
401 Dulany Street
Alexandria, VA 22314

The centralized facsimile number is (571) 273-8300.

Telephone inquiries concerning this decision should be directed to the undersigned at (571) 272-7751.

/Joan Olszewski/
Joan Olszewski
Petitions Examiner
Office of Petitions

cc: A.J. Peach
Dennemeyer & Co LTD
Regent House Heaton Lane
Stockport Cheshire
England SK4 1BB

UNITED STATES PATENT AND TRADEMARK OFFICE

Commissioner for Patents
United States Patent and Trademark Office
P.O. Box 1450
Alexandria, VA 22313-1450
www.uspto.gov

**KILPATRICK TOWNSEND & STOCKTON LLP**
**TWO EMBARCADERO CENTER**
**EIGHTH FLOOR**
**SAN FRANCISCO CA 94111-3834**

**MAILED**
OCT 07 2011
**OFFICE OF PETITIONS**

| | | |
|---|---|---|
| In re Patent No. 7,233,340 | : | |
| Issued: June 19, 2007 | : | |
| Application No. 10/428,324 | : | ON PETITION |
| Filed: April 30, 2003 | : | |
| Attorney Docket No. 92101-664835 (009010US) | : | |

This is a notice regarding your request for acceptance of a fee deficiency submission under 37 CFR 1.28 filed September 22, 2011.

On September 1, 1998, the Court of Appeals for the Federal Circuit held that 37 CFR 1.28(c) is the sole provision governing the time for correction of the erroneous payment of the issue fee as a small entity. **See DH Technology v. Synergystex International, Inc. 154 F.3d 1333, 47 USPQ2d 1865 (Fed. Cir. Sept. 1, 1998).**

The Office no longer investigates or rejects original or reissue applications under 37 CFR 1.56. **1098 Off. Gaz. Pat. Office 502 (January 3, 1989)**. Therefore, nothing in this Notice is intended to imply that an investigation was done.

Your fee deficiency submission under 37 CFR 1.28 is hereby **ACCEPTED**.

This patent is no longer entitled to small entity status. Accordingly, all future fees paid in this patent must be paid at the large entity rate.

Telephone inquiries concerning this decision should be directed to the undersigned at (571) 272-7751.

/Joan Olszewski/
Joan Olszewski
Petitions Examiner
Office of Petitions

## SPE RESPONSE FOR CERTIFICATE OF CORRECTION

**Paper No.:** _____

**DATE** : December 8, 2010

**TO SPE OF** : ART UNIT 3779 - SPE Thomas Sweet

**SUBJECT** : Request for Certificate of Correction for Appl. No.: 10/428,350 Patent No.: 7,815,686 B2

Please respond to this request for a certificate of correction within 7 days.

**FOR IFW FILES:**

Please review the requested changes/corrections as shown in the **COCIN** document(s) in the IFW application image. No new matter should be introduced, nor should the scope or meaning of the claims be changed.

Please complete the response (see below) and forward the completed response to scanning using document code **COCX**.

**FOR PAPER FILES:**

Please review the requested changes/corrections as shown in the attached certificate of correction. Please complete this form (see below) and forward it with the file to:

**Certificates of Correction Branch (CofC)**
**Randolph Square Building**
**2800 South Randolph Street**
**Arlington, VA 22206**

**Antonio Johnson**

**Should the change to claim 26, line 5 (Column 16, line 31) inserting " β" after "transforming growth factor" is approved as requested by applicant.?**
**See COCIN dated 11-5-2010**

**/THOMAS J. SWEET/**
**Certificates of Correction Branch**
**(571)272-0483**

**Thank You For Your Assistance**

**The request for issuing the above-identified correction(s) is hereby:**
Note your decision on the appropriate box.

| | |
|---|---|
| **X Approved** | **All** changes apply. |
| ❑ **Approved in Part** | Specify below which changes **do not** apply. |
| ❑ **Denied** | State the reasons for denial below. |

**Comments:** _____

_____

_____

_____ _____ **SPE**_____ **Art Unit** _____

## SPE RESPONSE FOR CERTIFICATE OF CORRECTION

Paper No.: _____

DATE : December 8, 2010

TO SPE OF : ART UNIT 3779 - SPE Thomas Sweet.

SUBJECT : Request for Certificate of Correction for Appl. No.: 10/428,350 Patent No.: 7,815,686 B2

Please respond to this request for a certificate of correction within 7 days.

**FOR IFW FILES:**

Please review the requested changes/corrections as shown in the **COCIN** document(s) in the IFW application image. No new matter should be introduced, nor should the scope or meaning of the claims be changed.

Please complete the response (see below) and forward the completed response to scanning using document code **COCX**.

**FOR PAPER FILES:**

Please review the requested changes/corrections as shown in the attached certificate of correction. Please complete this form (see below) and forward it with the file to:

**Certificates of Correction Branch (CofC)**
**Randolph Square Building**
**2800 South Randolph Street**
**Arlington, VA 22206**

**Should the change to claim 26, line 5 (Column 16, line 31) inserting "β" after "transforming growth factor" is approved as requested by applicant?** ***See COCIN dated 11-5-2011***

**Antonio Johnson**

**Certificates of Correction Branch**

**(571)272-0483**

**Thank You For Your Assistance**

**The request for issuing the above-identified correction(s) is hereby:**
Note your decision on the appropriate box.

✓ **Approved** — **All** changes apply.

☐ **Approved in Part** — Specify below which changes **do not** apply.

☐ **Denied** — State the reasons for denial below.

**Comments:** Approved, beta was part of the claimed disclosure for claim 26

_____ **SPE** /Thomas J Sweet/ **Art Unit** 3779

UNITED STATES PATENT AND TRADEMARK OFFICE

Commissioner for Patents
United States Patent and Trademark Office
P.O. Box 1450
Alexandria, VA 22313-1450
www.uspto.gov

In re Patent No. 7088435
Issue Date: August 8,2006
Application No. 10428398
Filed: May 2,2003
Attorney Docket No. U 014585-0

:
:DECISION GRANTING PETITION
:UNDER 37 CFR 1.378(c)
:

This is a decision on the electronic petition, filed May 19,2011 ,under 37 CFR 1.378(c) to accept the unintentionally delayed payment of the 3.5 year maintenance fee for the above-identified patent.

The petition is **GRANTED**.

The maintenance fee is accepted, and the above-identified patent reinstated as of May 19,2011 .
This decision also constitutes notice that the fee has been accepted. An electronic copy of the petition and this decision has been created as an entry in the Image File Wrapper. Nevertheless, petitioner should print and retain an independent copy.

Telephone inquiries related to this electronic decision should be directed to the Electronic Business Center at 1-866-217-9197.

PTO/SB/66 (03-09)
Approved for use through 03/31/2012. OMB 0651-0016
U.S. Patent and Trademark Office: U.S. DEPARTMENT OF COMMERCE
Under the Paperwork Reduction Act of 1995, no persons are required to respond to a collection of information unless it displays valid OMB control number.

# PETITION TO ACCEPT UNINTENTIONALLY DELAYED PAYMENT OF MAINTENANCE FEE IN AN EXPIRED PATENT (37 CFR 1.378(c))

| Patent Number | Issue Date (YYYY-MM-DD) | Application Number | Filing Date (YYYY-MM-DD) | Docket Number (if applicable) |
|---|---|---|---|---|
| 7088435 | 2006-08-08 | 10428398 | 2003-05-02 | 231-002B |

CAUTION: Maintenance fee (and surcharge, if any) payment must correctly identify: (1) the patent number and (2) the application number of the actual U.S. application leading to issuance of that patent to ensure the fee(s) is/are associated with the correct patent. 37 CFR 1.366(c) and (d).

SMALL ENTITY
☒ Patentee claims, or has previously claimed, small entity status. See 37 CFR 1.27.

LOSS OF ENTITLEMENT TO SMALL ENTITY STATUS
☐ Patentee is no longer entitled to small entity status. See 37 CFR 1.27(g)

| NOT Small Entity | | Small Entity | |
|---|---|---|---|
| Fee | Code | Fee | Code |
| ○ 3 ½ year | (1551) | ● 3 ½ year | (2551) |
| ○ 7 ½ year | (1552) | ○ 7 ½ year | (2552) |
| ○ 11 ½ year | (1553) | ○ 11 ½ year | (2553) |

SURCHARGE
The surcharge required by 37 CFR 1.20(i)(2) (Fee Code 1558) must be paid as a condition of accepting unintentionally delayed payment of the maintenance fee.

MAINTENANCE FEE (37 CFR 1.20(e)-(g))
The appropriate maintenance fee must be submitted with this petition.

STATEMENT
THE UNDERSIGNED CERTIFIES THAT THE DELAY IN PAYMENT OF THE MAINTENANCE FEE TO THIS PATENT WAS UNINTENTIONAL

PETITIONER(S) REQUEST THAT THE DELAYED PAYMENT OF THE MAINTENANCE FEE BE ACCEPTED AND THE PATENT REINSTATED

THIS PORTION MUST BE COMPLETED BY THE SIGNATORY OR SIGNATORIES

37 CFR 1.378(d) states: "Any petition under this section must be signed by an attorney or agent registered to practice before the Patent and Trademark Office, or by the patentee, the assignee, or other party in interest."

I certify, in accordance with 37 CFR 1.4(d)(4) that I am

- ● An attorney or agent registered to practice before the Patent and Trademark Office
- ○ A sole patentee
- ○ A joint patentee; I certify that I am authorized to sign this submission on behalf of all the other patentees.
- ○ A joint patentee; all of whom are signing this e-petition
- ○ The assignee of record of the entire interest

Under the Paperwork Reduction Act of 1995, no persons are required to respond to a collection of information unless it displays valid OMB control number.

| Patent Practitioner | | | |
|---|---|---|---|
| A signature of the applicant or representative is required in accordance with 37 CFR 1.33 and 10.18. Please see 37 CFR 1.4(d) for the form of the signature | | | |
| Signature | /Seth H. Ostrow/ | Date (YYYY-MM-DD) | 2011-05-19 |
| Name | Seth H. Ostrow | Registration Number | 37410 |

This collection of information is required by 37 CFR 1.378(c). The information is required to obtain or retain a benefit by the public which is to file (and by the USPTO to process) an application. Confidentiality is governed by 35 U.S.C. 122 and 37 CFR 1.11 and 1.14. This collection is estimated to take 1 hour to complete, including gathering, preparing, and submitting the completed application form to the USPTO. Time will vary depending upon the individual case. Any comments on the amount of time you require to complete this form and/ or suggestions for reducing this burden, should be sent to the Chief Information Officer, U.S. Patent and Trademark Office, U.S. Department of Commerce, P.O. Box 1450, Alexandria, VA 22313-1450. DO NOT SEND FEES OR COMPLETED FORMS TO THIS ADDRESS. **This form can only be used when in conjunction with EFS-Web. If this form is mailed to the USPTO, it may cause delays in reinstating the patent.**

# Privacy Act Statement

The Privacy Act of 1974 (P.L. 93-579) requires that you be given certain information in connection with your submission of the attached form related to a patent application or patent. Accordingly, pursuant to the requirements of the Act, please be advised that: (1) the general authority for the collection of this information is 35 U.S.C. 2(b)(2); (2) furnishing of the information solicited is voluntary; and (3) the principal purpose for which the information is used by the U.S. Patent and Trademark Office is to process and/or examine your submission related to a patent application or patent. If you do not furnish the requested information, the U.S. Patent and Trademark Office may not be able to process and/or examine your submission, which may result in termination of proceedings or abandonment of the application or expiration of the patent.

The information provided by you in this form will be subject to the following routine uses:

1. The information on this form will be treated confidentially to the extent allowed under the Freedom of Information Act (5 U.S.C. 552) and the Privacy Act (5 U.S.C. 552a). Records from this system of records may be disclosed to the Department of Justice to determine whether the Freedom of Information Act requires disclosure of these records.

2. A record from this system of records may be disclosed, as a routine use, in the course of presenting evidence to a court, magistrate, or administrative tribunal, including disclosures to opposing counsel in the course of settlement negotiations.

3. A record in this system of records may be disclosed, as a routine use, to a Member of Congress submitting a request involving an individual, to whom the record pertains, when the individual has requested assistance from the Member with respect to the subject matter of the record.

4. A record in this system of records may be disclosed, as a routine use, to a contractor of the Agency having need for the information in order to perform a contract. Recipients of information shall be required to comply with the requirements of the Privacy Act of 1974, as amended, pursuant to 5 U.S.C. 552a(m).

5. A record related to an International Application filed under the Patent Cooperation Treaty in this system of records may be disclosed, as a routine use, to the International Bureau of the World Intellectual Property Organization, pursuant to the Patent Cooperation Treaty.

6. A record in this system of records may be disclosed, as a routine use, to another federal agency for purposes of National Security review (35 U.S.C. 181) and for review pursuant to the Atomic Energy Act (42 U.S.C. 218(c)).

7. A record from this system of records may be disclosed, as a routine use, to the Administrator, General Services, or his/her designee, during an inspection of records conducted by GSA as part of that agency's responsibility to recommend improvements in records management practices and programs, under authority of 44 U.S.C. 2904 and 2906. Such disclosure shall be made in accordance with the GSA regulations governing inspection of records for this purpose, and any other relevant (i.e., GSA or Commerce) directive. Such disclosure shall not be used to make determinations about individuals.

8. A record from this system of records may be disclosed, as a routine use, to the public after either publication of the application pursuant to 35 U.S.C. 122(b) or issuance of a patent pursuant to 35 U.S.C. 151. Further, a record may be disclosed, subject to the limitations of 37 CFR 1.14, as a routine use, to the public if the record was filed in an application which became abandoned or in which the proceedings were terminated and which application is referenced by either a published application, an application open to public inspections or an issued patent.

9. A record from this system of records may be disclosed, as a routine use, to a Federal, State, or local law enforcement agency, if the USPTO becomes aware of a violation or potential violation of law or regulation.

UNITED STATES PATENT AND TRADEMARK OFFICE

Commissioner for Patents
United States Patent and Trademark Office
P.O. Box 1450
Alexandria, VA 22313-1450
www.uspto.gov

NORTH AMERICA INTELLECTUAL PROPERTY CORPORATION
PO BOX 506
MERRIFIELD VA 22116

MAILED
JAN 06 2012
OFFICE OF PETITIONS

In re
Sam Shiaw-Shiang Jiang
Application No. 10/428,549
Filed: May 2, 2003
Patent No. 7,388,883
Issued: June 17, 2008
Attorney Docket No. ASTP0084USA

DECISION

This is a decision on the fee deficiency submission under 37 CFR 1.28(c), filed December 9, 2011.

The fee deficiency submission under 37 CFR 1.28 of $1550 is hereby accepted.

The change of status to large entity has been entered.

Telephone inquiries concerning this matter may be directed to the undersigned at (571) 272-3207.

Cliff Congo
Petitions Attorney
Office of Petitions

cc: Klein, O'Neill &Singh, LLP
18200 Von Karman Avenue
Suite 725
Irvine, CA 92612

UNITED STATES PATENT AND TRADEMARK OFFICE

Commissioner for Patents
United States Patent and Trademark Office
P.O. Box 1450
Alexandria, VA 22313-1450
www.uspto.gov

**Eric Vaitl**
**191 Shyrewood Drive**
**Lawrenceville GA 30043**

MAILED
OCT 22 2010
OFFICE OF PETITIONS

| | | |
|---|---|---|
| In re Patent No. 7,093,038 | : | |
| Issue Date: August 15, 2006 | : | |
| Application No. 10/428,638 | : | ON PETITION |
| Filed: May 2, 2003 | : | |
| Attorney Docket No. IVI-10 | : | |

This is a decision on the petition under 37 CFR 1.378(c), filed September 20, 2010, to accept the delayed payment of a maintenance fee for the above-identified patent.

The petition is **DISMISSED**.

If reconsideration of this decision is desired, a petition for reconsideration under 37 CFR 1.378(e) must be filed within TWO (2) MONTHS from the mail date of this decision. No extension of this two-month time limit can be granted under 37 CFR 1.136(a) or (b). This is **not** a final agency action within the meaning of 5 U.S.C. § 704.

Any petition for reconsideration of this decision must be accompanied by the petition fee of $400 as set forth in 37 CFR 1.17(f). The petition for reconsideration must include the lacking item(s) noted below, since, after a decision on the petition for reconsideration, no further reconsideration or review of the matter will be undertaken by the Commissioner.

A petition to accept the unintentionally delayed payment of a maintenance fee under 35 U.S.C. § 41(c) and 37 CFR 1.378(c) must be accompanied by: (1) a statement that the delay was unintentional; (2) payment of the appropriate maintenance fee, unless previously submitted; (3) payment of the surcharge set forth in 37 CFR 1.20(i)(2). This petition lacks item (2) above.

As to item (2) the check payment in amount of $2,120 was not sufficient. The petition surcharge fee is $1,640 and the maintenance fee payment for a 3 ½ year at a small entity rate is $490. The total is $2,130. There is a balance of $10.00 that is due.

As a reminder a renewed petition must be accompanied by a fee of $400.

It is not apparent whether the person signing the statement of unintentional delay was in a position to have firsthand or direct knowledge of the facts and circumstances of the delay at issue. Nevertheless, such statement is being treated as having been made as the result of a reasonable inquiry into the facts and circumstances of such delay. In the event that such an inquiry has not been made, petitioner must make such an inquiry. If such inquiry results in the discovery that the delay in paying the maintenance fee under 37 CFR 1.378(c) was intentional, petitioner must notify the Office.

Further correspondence with respect to this matter should be addressed as follows:

By Mail: Mail Stop PETITION
Commissioner for Patents
Post Office Box 1450
Alexandria, VA 22313-1450

By hand: U. S. Patent and Trademark Office
Customer Service Window, Mail Stop Petitions
Randolph Building
401 Dulany Street
Alexandria, VA 22314

The centralized facsimile number is **(571) 273-8300.**

Telephone inquiries should be directed to the undersigned at (571) 272-4618.

/Kimberly Inabinet/

Kimberly Inabinet
Petitions Examiner
Office of Petitions

UNITED STATES PATENT AND TRADEMARK OFFICE

Commissioner for Patents
United States Patent and Trademark Office
P.O. Box 1450
Alexandria, VA 22313-1450
www.uspto.gov

MAILED
JUL 05 2011
OFFICE OF PETITIONS

**Eric Vaitl**
**191 Shyrewood Drive**
**Lawrenceville GA 30043**

| | | |
|---|---|---|
| In re Patent No. 7,093,038 | : | |
| Issue Date: August 15, 2006 | : | |
| Application No. 10/428,638 | : | ON PETITION |
| Filed: May 2, 2003 | : | |
| Attorney Docket No. IVI-10 | : | |

This is a decision on the petition under 37 CFR 1.378(c), filed June 7, 2011, to accept the delayed payment of a maintenance fee for the above-identified patent.

The petition is **GRANTED**.

This patent expired on August 16, 2010, for failure to pay the three and one-half year maintenance fee. Since this petition was submitted within twenty-four months after the six-month grace period provided in 37 CFR 1.362(e), the petition was timely filed under the provisions of 37 CFR 1.378(c).

The maintenance fee is hereby accepted and the above-identified patent is reinstated as of the mail date of this decision.

Telephone inquiries concerning this decision should be directed to Kimberly Inabinet at (571) 272-4618.

The patent file is being forwarded to Files Repository.

/Kimberly Inabinet/

Kimberly Inabinet
Petitions Examiner
Office of Petitions

UNITED STATES PATENT AND TRADEMARK OFFICE

Commissioner for Patents
United States Patent and Trademark Office
P.O. Box 1450
Alexandria, VA 22313-1450
www.uspto.gov

Paper No.

ERICSSON INC.
6300 LEGACY DRIVE
M/S EVR 1-C-11
PLANO TX 75024

MAILED
NOV 09 2010
OFFICE OF PETITIONS

| | | |
|---|---|---|
| In re Application of | : | |
| Robertsson | : | |
| Application No. 10/428,733 | : | DECISION ON RENEWED |
| Filed: May 1, 2003 | : | PETITION PURSUANT TO |
| Attorney Docket No.: P17517-US2 | : | 37 C.F.R. § 1.137(B) |
| Title: BI-DIRECTIONAL PROBING AND TESTING OF SOFTWARE | : | |

This is a decision on the renewed petition pursuant to 37 C.F.R. § 1.137(b), filed November 30, 2009, to revive the above-identified application.

This renewed petition pursuant to 37 C.F.R. § 1.137(b) is **GRANTED.**

The above-identified application became abandoned for failure to reply within the meaning of 37 C.F.R § 1.113 in a timely manner to the final Office action mailed May 23, 2008, which set a shortened statutory period for reply of three months. An after-final amendment was received on September 19, 2008 along with a one-month extension of time, and an advisory action was mailed on December 17, 2008. No additional extensions of time under the provisions of 37 C.F.R § 1.136(a) were obtained (a second after-final response was received on January 23, 2009, which was subsequent to the expiration of the maximum extendable period for response). Accordingly, the above-identified application became abandoned on September 24, 2008. A notice of abandonment was mailed on July 20, 2009.

A grantable petition pursuant to 37 C.F.R. § 1.137(b) must be accompanied by:

(1) The reply required to the outstanding Office action or notice, unless previously filed;
(2) The petition fee as set forth in 37 C.F.R. § 1.17(m);
(3) A statement that the entire delay in filing the required reply from the due date for the reply until the filing of a grantable petition pursuant to this paragraph was unintentional. The Commissioner may require additional information where there is a question whether the delay was unintentional, and;
(4) Any terminal disclaimer (and fee as set forth in 37 C.F.R. § 1.20(d)) required pursuant to paragraph (d) of this section.

An original petition pursuant to 37 C.F.R. § 1.137(b) was filed on June 23, 2009, along with the petition fee, an amendment, and the proper statement of unintentional delay. The original petition was dismissed via the mailing of a decision on September 28, 2009, which indicated that the second and third requirements of Rule 1.137(b) have been satisfied. The fourth requirement of Rule 1.137(b) is not applicable, as a terminal disclaimer is not required.[1]

With this renewed petition, Petitioner has submitted a Request for Continued Examination (RCE) under 37 C.F.R. § 1.114, including a request for consideration of a concurrently submitted amendment and payment of the RCE fee. The RCE has been accepted as the required reply under 37 C.F.R. § 1.137(b)(1).

As such, the first three requirements of Rule 1.137(b) have been met.

The Technology Center will be notified of this decision. The Technology Center's support staff will notify the Examiner of this decision, so that the submission under 37 C.F.R. § 1.114 - the amendment that was submitted on November 30, 2009 - can be processed.

Petitioner may find it beneficial to view Private PAIR within a fortnight of the present decision to ensure that the revival has been acknowledged by the Technology Center in response to this

1 See Rule 1.137(d).

decision. It is noted that all inquiries with regard to any failure of that change in status should be directed to the Technology Center where that change of status must be effected - **the Office of Petitions cannot effectuate a change of status.**

Telephone inquiries regarding *this decision* should be directed to the undersigned at (571) 272-3225.[2] All other inquiries concerning examination procedures or status of the application should be directed to the Technology Center.

/Paul Shanoski/
Paul Shanoski
Senior Attorney
Office of Petitions

2 Petitioner will note that all practice before the Office should be in writing, and the action of the Office will be based exclusively on the written record in the Office. See 37 C.F.R. § 1.2. As such, Petitioner is reminded that no telephone discussion may be controlling or considered authority for Petitioner's further action(s).

UNITED STATES PATENT AND TRADEMARK OFFICE

Commissioner for Patents
United States Patent and Trademark Office
P.O. Box 1450
Alexandria, VA 22313-1450
www.uspto.gov

**EVAN LAW GROUP LLC**
**600 WEST JACKSON BLVD., SUITE 625**
**CHICAGO IL 60661**

MAILED
DEC 19 2011
OFFICE OF PETITIONS

| | | |
|---|---|---|
| In re Patent No. 7,390,461 | : | |
| Issued: June 24, 2008 | : | |
| Application No. 10/428,785 | : | NOTICE |
| Filed: May 5, 2003 | : | |
| Attorney Docket No. ARR01-001-US | : | |

This is a notice regarding your request for acceptance of a fee deficiency submission under 37 CFR 1.28 filed November 7, 2011.

On September 1, 1998, the Court of Appeals for the Federal Circuit held that 37 CFR 1.28(c) is the sole provision governing the time for correction of the erroneous payment of the issue fee as a small entity. **See DH Technology v. Synergystex International, Inc. 154 F.3d 1333, 47 USPQ2d 1865 (Fed. Cir. Sept. 1, 1998).**

The Office no longer investigates or rejects original or reissue applications under 37 CFR 1.56. **1098 Off. Gaz. Pat. Office 502 (January 3, 1989)**. Therefore, nothing in this Notice is intended to imply that an investigation was done.

Your fee deficiency submission under 37 CFR 1.28 is hereby **ACCEPTED**.

This patent is no longer entitled to small entity status. Accordingly, all future fees paid in this patent must be paid at the large entity rate.

Telephone inquiries concerning this decision should be directed to the undersigned at (571) 272-7751.

/Joan Olszewski/
Joan Olszewski
Petitions Examiner
Office of Petitions

UNITED STATES PATENT AND TRADEMARK OFFICE

Commissioner for Patents
United States Patent and Trademark Office
P.O. Box 1450
Alexandria, VA 22313-1450
www.uspto.gov

**WOMBLE CARLYLE SANDRIDGE & RICE, LLP**
**ATTN: IP DOCKETING**
**PO BOX 7037**
**Atlanta GA 30357-0037**

MAILED
MAR 07 2012
OFFICE OF PETITIONS

| | | |
|---|---|---|
| In re Application of | : | |
| Arthur Kunz et al. | : | |
| Application No. 10/428,894 | : | DECISION ON PETITION |
| Filed: May 2, 2003 | : | |
| Attorney Docket No. P194 1010.1 | : | |

This is a decision on the petition under 37 CFR 1.182 or in the alternative 37 CFR 1.137(b), filed, January 10, 2012, to confirm the status of the above identified application as "pending" or in the alternative to revive the application as unintentionally abandoned.

The petition under 37 CFR 1.182 is **DISMISSED**.

The petition under 37 CFR 1.137(b) is **GRANTED**.

As to the petition under 37 CFR 1.182:

Petitioner requests confirmation that the proper status of the instant application is "pending". PTO records show that the current status is "pending", but as will be discussed below this was in error and the status should have been "abandoned".

A first restriction requirement was mailed August 10, 2005. The restriction requirement set a period for response of one (1) month. This one month period could have been extended an additional five (5) months for a total response time of six (6) months. The record shows that an interview between the examiner and applicants' representative was held on February 23, 2006. It should be noted that at the time of the interview, the application was already abandoned, the application having been abandoned as of September 11, 2005. No extension of time or response to the restriction requirement had been filed by applicant.

Petitioner argues that the interview summary made it clear that the examiner considered the first restriction requirement defective and that the examiner would redo the restriction requirement (which was done on the same day as the interview, February 23, 2006). Petitioner indicates that, based on the interview summary, there was no need for him to respond to the August 10, 2005 restriction request.

At the time of the interview, the application was already abandoned. As such, the examiner had no jurisdiction to redo or otherwise issue an Office action until the application had been revived. If applicants felt that the restriction requirement was defective, they should have communicated this fact to the examiner in a timely manner, within the one month or an extended response time.

37 CFR 1.182 is directed towards situations not specifically provided for in the regulations. However, in this instance the regulations are clear on the consequences of failing to timely reply to an Office action, see 37 CFR 1.135. As noted above, the application was already in abandoned status at the time of the interview between the examiner and applicant. For this reason, the petition under 37 CFR 1.182 is dismissed.

As to the petition under 37 CFR 1.137(b):

The petition satisfies the requirements of 37 CFR 1.137(b) in that petitioner has supplied (1) the reply in the form of a Response to Election/Restriction filed May 22, 2006; (2) the petition fee of $1,860 (charged to petitioners' deposit account); and (3) a proper statement of unintentional delay.

The petition under 37 CFR 1.137(b) is granted.

Any questions concerning this matter may be directed to Carl Friedman at (571) 272-6842.

Carl Friedman
Petitions Examiner
Office of Petitions

## SPE RESPONSE FOR CERTIFICATE OF CORRECTION

**DATE** : 11/09/11

**TO SPE OF** : ART UNIT 2482

**SUBJECT** : Request for Certificate of Correction for Appl. No.: 10429101 Patent No.: 7944971

**CofC mailroom date:** 10/31/11

Please respond to this request for a certificate of correction within 7 days.

**FOR IFW FILES:**

Please review the requested changes/corrections as shown in the **COCIN** document(s) in the IFW application image. No new matter should be introduced, nor should the scope or meaning of the claims be changed.

Please complete the response (see below) and forward the completed response to scanning using document code **COCX**.

**FOR PAPER FILES:**

Please review the requested changes/corrections as shown in the attached certificate of correction. Please complete this form (see below) and forward it with the file to:

**Certificates of Correction Branch (CofC)**
**Randolph Square – 9D10-A**
**Palm Location 7580**
[redacted]

**Note:** **Please check the Drawing & Claims should these changes be made or not?**

*Lamonte Newsome*

**Certificates of Correction Branch**

**571-272-3421**

**Thank You For Your Assistance**

**The request for issuing the above-identified correction(s) is hereby:**
Note your decision on the appropriate box.

## SPE RESPONSE FOR CERTIFICATE OF CORRECTION

**X Approved** — **All** changes apply.

☐ **Approved in Part** — Specify below which changes **do not** apply.

☐ **Denied** — State the reasons for denial below.

**Comments:** _____

_____

_____

_____

_____

/Chris Kelley/
2482

**SPE** **Art Unit**

UNITED STATES PATENT AND TRADEMARK OFFICE

Commissioner for Patents
United States Patent and Trademark Office
P.O. Box 1450
Alexandria, VA 22313-1450
www.uspto.gov

MAILED

APR 29 2011

OFFICE OF PETITIONS

KNOBBE MARTENS OLSON & BEAR LLP
2040 MAIN STREET
FOURTEENTH FLOOR
IRVINE, CA 92614

| | | |
|---|---|---|
| In re Patent No. 7,258,978 | : | |
| Issue Date: August 21, 2007 | : | |
| Application No. 10/429,291 | : | NOTICE |
| Filed: April 2, 2003 | : | |
| Attorney Docket No.: GENOM.023A | : | |

This is a notice regarding your request for acceptance of a fee deficiency submission under 37 CFR 1.28.

The Office no longer investigates or rejects original or reissue patent under 37 CFR 1.56. **1098 Off. Gaz. Pat. Office 502 (January 3, 1989)**. Therefore, nothing in this Notice is intended to imply that an investigation was done.

Your fee deficiency submission under 37 CFR 1.28 is hereby **ACCEPTED**.

This patent no longer qualifies for small entity status. Accordingly, all future fees must be paid at the large entity rate.

It is noted that the present communication is not signed by a registered attorney or agent of record. However, in accordance with 37 CFR 1.34(a), the signature of Scott J. Rittman appearing on the petition shall constitute a representation to the United States Patent and Trademark Office that he is authorized to represent the particular party on whose behalf he acts. A courtesy copy of this notice is being mailed to the address noted on this communication. Counsel is reminded that any Maintenance Fee Reminder which may be mailed regarding maintenance fees for the above-identified patent will be directed solely to the fee address of record.

Inquiries related to this communication should be directed to the undersigned at (571) 272-3204.

/SDB/

Sherry D. Brinkley
Petitions Examiner
Office of Petitions

cc: SCOTT J. RITTMAN
BECTON, DICKINSON AND COMPANY
1 BECTON DRIVE, MC 110
FRANLIN LAKES, NJ 07417-1880

UNITED STATES PATENT AND TRADEMARK OFFICE

Commissioner for Patents
United States Patent and Trademark Office
P.O. Box 1450
Alexandria, VA 22313-1450
www.uspto.gov

**CARROLL ALEXIS SPENCER, II**
**CELL LOTTO, INC.**
**122 GALE ROAD**
**WILMINGTON, NC 28405**

**MAILED**

AUG 06 2010

**OFFICE OF PETITIONS**

In re Application of
**Carroll Alexis SPENCER II**
Application No. 10/429,313
Filed: May 5, 2003
Attorney Docket No. **7374-001**

DECISION ON REQUEST FOR REVOCATION OF POWER OF ATTORNEY

This is a decision on the Request to Revoke the attorney or agent of record under 37 C.F.R. § 1.36(a), filed March 19, 2010.

The request is **APPROVED**.

A power of attorney, pursuant to § 1.32(b), may be revoked at any stage in the proceeding of a case by an applicant for patent (§ 1.41(b)) or an assignee of the entire interest of the applicant under § 3.71(b). Fewer than all of the applicants (or by fewer than the assignee of the entire interest of the applicant) may only revoke the power of attorney upon a showing of sufficient cause, and payment of the petition fee set forth § 1.17(h). For the assignee to take action a proper statement under § 3.73(b) is required.

The correspondence address of record has been changed and the new correspondence address is the address indicated below.

The application became abandoned for failure to timely respond to the Final Office action mailed May 9, 2005.

Telephone inquiries concerning this decision should be directed to the undersigned at (571) 272-7253.

/Monica A. Graves/
Petitions Examiner, Office of Petitions

cc: **JINAN GLASGOW**
**TRIANGLE PATENTS, PLLC.**
**P.O. BOX 28539**
**RALEIGH, NC 27611-8539**

UNITED STATES PATENT AND TRADEMARK OFFICE

Commissioner for Patents
United States Patent and Trademark Office
P.O. Box 1450
Alexandria, VA 22313-1450
www.uspto.gov

**TRIANGLE PATENTS, P.L.L.C.**
**P.O. BOX 28539**
**RALEIGH, NC 27611-8539**

**MAILED**

AUG 13 2010

**OFFICE OF PETITIONS**

In re Application of
**Carroll A. SPENCER II**
Application No. 10/429,313
Filed: May 5, 2003
Attorney Docket No. **7374-001**

DECISION ON PETITION
UNDER 37 CFR 1.137(b)

This is a decision on the petition under the unintentional provisions of 37 CFR 1.137(b), filed March 19, 2010, to revive the above-identified application.

The petition is **DISMISSED**.

Any request for reconsideration of this decision must be submitted within TWO (2) MONTHS from the mail date of this decision. Extensions of time under 37 CFR 1.136(a) are permitted. The reconsideration request should include a cover letter entitled "Renewed Petition under 37 CFR 1.137(b)." This is **not** a final agency action within the meaning of 5 U.S.C. § 704.

The application became abandoned for failure to timely reply within the meaning of 37 CFR 1.113 to the final Office action, mailed May 9, 2005, which set a shortened statutory period for reply of three (3) months. No extensions of time under the provisions of 37 CFR 1.136(a) were obtained. Accordingly, the application became abandoned on August 10, 2005.

A grantable petition under 37 CFR 1.137(b) must be accompanied by: (1) the required reply, unless previously filed; (2) the petition fee as set forth in 37 CFR 1.17(m); (3) a statement that the entire delay in filing the required reply from the due date for the reply until the filing of a grantable petition pursuant to 37 CFR 1.137(b) was unintentional; and (4) any terminal disclaimer (and fee as set forth in 37 CFR 1.20(d)) required by 37 CFR 1.137(d). Where there is a question as to whether either the abandonment or the delay in filing a petition under 37 CFR 1.137 was unintentional, the Director may require additional information. See MPEP 711.03(c)(II)(C) and (D).

The instant petition lacks item(3) a statement that the entire delay in filing the required reply from the due date for the reply until the filing of a grantable petitions pursuant to 37 CFR 1.137(b) was unintentional.

It is also noted that the Request for Continued Examination and the Amendment are contained in the same document. Each document should be submitted on a separate sheet.

Further correspondence with respect to this matter should be addressed as follows:

By Mail: Mail Stop PETITION
Commissioner for Patents
P. O. Box 1450
Alexandria, VA 22313-1450

By hand: U. S. Patent and Trademark Office
Customer Service Window, Mail Stop Petitions
Randolph Building
401 Dulany Street
Alexandria, VA 22314

The centralized facsimile number is **(571) 273-8300.**

Telephone inquiries concerning this decision should be directed to Monica A. Graves at (571) 272-7253.

Thurman K. Page
Petitions Examiner
Office of Petitions

UNITED STATES PATENT AND TRADEMARK OFFICE

Commissioner for Patents
United States Patent and Trademark Office
P.O. Box 1450
Alexandria, VA 22313-1450
www.uspto.gov

**TRIANGLE PATENTS, P.L.L.C.**
**P.O. BOX 28539**
**RALEIGH, NC 27611-8539**

**MAILED**

DEC 30 2010

**OFFICE OF PETITIONS**

| | | |
|---|---|---|
| In re Application of | : | |
| **Carroll A. SPENCER, III** | : | |
| Application No. 10/429,313 | : | DECISION ON PETITION |
| Filed: May 5, 2003 | : | UNDER 37 CFR 1.137(b) |
| Attorney Docket No. **7374-001** | : | |

This is a decision on the renewed petition under the unintentional provisions of 37 CFR 1.137(b), filed October 8, 2010, to revive the above-identified application.

The petition is **GRANTED**.

The application became abandoned for failure to timely file a reply within the meaning of 37 CFR 1.113 to the final Office action of May 9, 2005. The proposed reply required for consideration of a petition to revive must be a Notice of Appeal (and appeal fee required by 37 CFR 41.20(b)(2), an amendment that *prima facie* places the application in condition for allowance, a Request for Continued Examination and submission (37 CFR 1.114), or the filing of a continuing application under 37 CFR 1.53(b). See MPEP 711.03(c)(III)(A)(2). No extensions of time pursuant to the provisions of 37 CFR 1.136(a) were obtained. Accordingly, the date of abandonment of this application is August 10, 2005.

The petition satisfies the requirements of 37 CFR 1.137(b) in that petitioner has supplied (1) the reply in the form of a Request for Continued Examination (RCE) and fee of $405, and the submission required by 37 CFR 1.114; (2) the petition fee of $810; and (3) a proper statement of unintentional delay.

Telephone inquiries concerning this decision should be directed to Monica A. Graves at (571) 272-7253.

This application is being referred to Technology Center AU 2682 for processing of the RCE and for appropriate action by the Examiner in the normal course of business on the amendment submitted in accordance with 37 CFR 1.114.

Thurman K. Page
Petitions Examiner
Office of Petitions

SPE RESPONSE FOR CERTIFICATE OF CORRECTION

Paper No.: _____

DATE : 01/03/2011

TO SPE OF : ART UNIT: 2112 Attn: BAKER STEPHEN M

SUBJECT : Request for Certificate of Correction for Appl. No.: 10/429362 Patent No.: 7657822

CofC Mailroom date: 05/24/10

Please respond to this request for a certificate of correction within 7 days.

**FOR IFW FILES:**

Please review the requested changes/corrections as shown in the **COCIN** document(s) in the IFW application image. No new matter should be introduced, nor should the scope or meaning of the claims be changed.

Please complete the response (see below) and forward the completed response to scanning using document code **COCX**.

**FOR PAPER FILES:**

Please review the requested changes/corrections as shown in the attached certificate of correction. Please complete this form (see below) and forward it with the file to:

**Certificates of Correction Branch (CofC)**
**Randolph Square – 9D10-A**
**Palm Location 7580**

**Tasneem Siddiqui**
**Certificates of Correction Branch**
**703-756-1593 or 703-756-1814**

**Thank You For Your Assistance**

**The request for issuing the above-identified correction(s) is hereby:**
Note your decision on the appropriate box.

| | |
|---|---|
| X **Approved** | **All** changes apply. |
| ☐ **Approved in Part** | Specify below which changes **do not** apply. |
| ☐ **Denied** | State the reasons for denial below. |

**Comments:** _____

SCOTT BADERMAN
~~SUPERVISORY PATENT EXAMINER~~
**SPE**

2112
**Art Unit**

UNITED STATES PATENT AND TRADEMARK OFFICE

Commissioner for Patents
United States Patent and Trademark Office
P.O. Box 1450
Alexandria, VA 22313-1450
www.uspto.gov

MAILED
APR 26 2011
OFFICE OF PETITIONS

K&L GATES LLP
PO BOX 1135
CHICAGO IL 60690

| | |
|---|---|
| In re | : DECISION ON APPLICATION |
| Walker, et al. | : FOR PATENT TERM ADJUSTMENT |
| Application No. 10/430,021 | : AND NOTICE OF INTENT |
| Filed: May 5, 2003 | : TO ISSUE |
| Patent No. 7,867,073 | : CERTIFICATE OF CORRECTION |
| Issued: January 11, 2011 | : |

This is a decision on the "REQUEST FOR RECONSIDERATION OF PATENT TERM ADJUSTMENT UNDER 37 C.F.R. §1.705(d)", filed March 10, 2011. Patentees request that the patent term adjustment under 35 U.S.C. 154(b) be corrected from nine hundred thirty-seven (937) days to nine hundred ninety-three (993) days.

The application for patent term adjustment is **GRANTED**.

The Patent Term Adjustment indicated in the patent is to be corrected by issuance of a certificate of correction showing a revised Patent Term Adjustment of **nine hundred ninety-three (993) days**.

On June 17, 2010, the Office mailed the Determination of Patent Term Adjustment under 35 U.S.C. 154(b) in the instant application. The Notice stated that the patent term adjustment (PTA) to date was seven hundred twenty-nine (729) days. On September 3, 2010, Applicants filed a "LETTER REGARDING PATENT TERM ADJUSTMENT AT ALLOWANCE PURSUANT TO COMMENT 43 OF THE FINAL RULE", which was a candor letter indicating that the 729 days of patent term accorded was thought to be longer than appropriate. On January 11, 2011, the application issued into Patent No. 7,867,074, with a patent term adjustment of nine hundred thirty-seven (937) days.

A review of the file reveals that Applicants were assessed delay of one hundred twenty (120) days for filing the "LETTER REGARDING PATENT TERM ADJUSTMENT AT ALLOWANCE PURSUANT TO COMMENT 43 OF THE FINAL RULE" on September 3, 2010. Pursuant to 37 C.F.R. § 1.704(e), the submission of an application for patent term adjustment will not be considered a failure to engage in reasonable efforts to conclude prosecution of the application. Likewise, the submission of a candor letter will not be considered a failure to engage in reasonable efforts to conclude prosecution of the application. Accordingly, zero (0) days should have been assessed for this filing.

Applicants also point out that they should have been assessed additional days of Applicant delay pursuant to 37 CFR 1.704(c)(8). Applicants filed an RCE on October 30, 2007. Subsequently, Applicants filed an IDS on January 2, 2008, and were not assessed any days of Applicant delay. However, pursuant to 37 CFR 1.704(c)(8), sixty-four (64) days of Applicant delay should have been assessed for this supplemental filing.

In view thereof, the correct determination of patent term adjustment is nine hundred ninety-three (993) days (1263 days of PTO delay, reduced by 270 days of applicant delay).

Receipt of the $200 fee is acknowledged.

The application is being forwarded to the Certificate of Corrections Branch for issuance of a certificate of correction, indicating a Patent Term Adjustment of **nine hundred ninety-three (993) days**.

Telephone inquiries specific to this matter should be directed to Cliff Congo, Petitions Attorney, at (571)272-3207.

Anthony Knight
Director
Office of Petitions

Enclosure: draft Certificate of Correction

UNITED STATES PATENT AND TRADEMARK OFFICE

# DRAFT CERTIFICATE OF CORRECTION

PATENT : 7,867,073 B2

DATED : **January 11, 2011**

INVENTOR(S) : Walker et al.

It is certified that error appears in the above-identified patent and that said Letters Patent is hereby corrected as shown below:

On the cover page,

[*] Notice: Subject to any disclaimer, the term of this patent is extended or adjusted under 35 USC 154(b) by 937 days.

Delete the phrase "by 937 days" and insert – by 993 days--

UNITED STATES PATENT AND TRADEMARK OFFICE

Commissioner for Patents
United States Patent and Trademark Office
P.O. Box 1450
Alexandria, VA 22313-1450
www.uspto.gov

Michael J. LaBrie
McAfee & Taft
Tenth Floor, Two Leadership Square
211 North Robinson
Oklahoma City, OK 73102

**MAILED**
AUG 01 2011
**OFFICE OF PETITIONS**

| | | |
|---|---|---|
| In re Patent No. 6, 816,106 | : | |
| Issued: November 9, 2004 | : | |
| Application No.: 10/430,167 | : | NOTICE |
| Filed: May 6, 2003 | : | |
| Attorney Docket No: **DC.1004US** | : | |

This is a notice regarding your request for acceptance of a fee deficiency submission under 37 CFR 1.28. On September 1, 1998, the Court of Appeals for the Federal Circuit held that 37 CFR 1.28(c) is the sole provision governing the time for correction of the erroneous payment of the issue fee as a small entity. **See DH Technology v. Synergystex International, Inc. 154 F.3d 1333, 47 USPQ2d 1865 (Fed. Cir. Sept. 1, 1998).**

The Office no longer investigates or rejects original or reissue applications under 37 CFR 1.56. **1098 Off. Gaz. Pat. Office 502 (January 3, 1989)**. Therefore, nothing in this Notice is intended to imply that an investigation was done.

Your fee deficiency submission under 37 CFR 1.28 is hereby **ACCEPTED**.

This application is no longer entitled to small entity status. Accordingly, all future fees paid in this application must be paid at the large entity rate.

Inquiries related to this communication should be directed to the undersigned at (571) 272-3222.

/Kenya A. McLaughlin/

Kenya A. McLaughlin
Petitions Attorney
Office of Petitions

UNITED STATES PATENT AND TRADEMARK OFFICE

Commissioner for Patents
United States Patent and Trademark Office
P.O. Box 1450
Alexandria, VA 22313-1450
www.uspto.gov

MAILED
OCT 04 2011
OFFICE OF PETITIONS

DUANE MORRIS LLP - Philadelphia
IP DEPARTMENT
30 SOUTH 17TH STREET
PHILADELPHIA, PA 19103-4196

| | | |
|---|---|---|
| In re Patent No. 7,348,052 | : | |
| Issued: March 25, 2008 | : | |
| Application No. 10/430,227 | : | NOTICE |
| Filed: May 5, 2003 | : | |
| Attorney Docket No.: E4919-00034 | : | |

This is a notice regarding your request for acceptance of a fee deficiency submission under 37 CFR 1.28, filed September 22, 2011.

The Office no longer investigates or rejects original or reissue patent under 37 CFR 1.56. **1098 Off. Gaz. Pat. Office 502 (January 3, 1989)**. Therefore, nothing in this Notice is intended to imply that an investigation was done.

Your fee deficiency submission under 37 CFR 1.28 is hereby **ACCEPTED**.

This patent is no longer entitled to small entity status. Accordingly, all future fees paid in this patent must be paid at the large entity rate.

/SDB/

Sherry D. Brinkley
Petitions Examiner
Office of Petitions

UNITED STATES PATENT AND TRADEMARK OFFICE

Commissioner for Patents
United States Patent and Trademark Office
P.O. Box 1450
Alexandria, VA 22313-1450
www.uspto.gov

**JOHN D. CARPENTER**
**CHRISTIE, PARKER & HALE L.L.P.**
**350 W. COLORADO BOULEVARD**
**SUITE 500**
**PASADENA CA 91105**

**MAILED**

SEP 01 2010

**OFFICE OF PETITIONS**

In re Patent No. 7,161,050 :
Issue Date: January 9, 2007 :
Application No. 10/430,240 : NOTICE
Filed: May 6, 2003 :
Attorney Docket No. 300100-1060 :

This is a notice regarding your request for acceptance of a fee deficiency submission under 37 CFR 1.28 submitted on May 27, 2010.

The Office no longer investigates or rejects original or reissue patent under 37 CFR 1.56. **1098 Off. Gaz. Pat. Office 502 (January 3, 1989)**. Therefore, nothing in this Notice is intended to imply that an investigation was done.

Your fee deficiency submission under 37 CFR 1.28 is hereby **ACCEPTED**.

This patent is no longer entitled to small entity status. Accordingly, all future fees paid in this patent must be paid at the large entity rate.

There is no indication that the person signing the request was ever given a power of attorney to prosecute the application. If the person signing the request desires to receive future correspondence regarding this patent, the appropriate power of attorney documents must be submitted. While a courtesy copy of this decision is being mailed to the person signing the request, all future correspondence will be directed to the address currently of record until appropriate instructions are received.

/KOC/
Karen Creasy
Petitions Examiner
Office of Petitions

cc:

**BAKER BOTTS L.L.P.**
**ONE SHELL PLAZA**
**910 LOUISIANA**
**HOUSTON, TX 77002**

UNITED STATES PATENT AND TRADEMARK OFFICE

UNITED STATES DEPARTMENT OF COMMERCE
United States Patent and Trademark Office
Address: COMMISSIONER FOR PATENTS
P.O. Box 1450
Alexandria, Virginia 22313-1450
www.uspto.gov

| APPLICATION NO. | FILING DATE | FIRST NAMED INVENTOR | ATTORNEY DOCKET NO. | CONFIRMATION NO. |
|---|---|---|---|---|
| 10/430,480 | 05/06/2003 | Amit Lewin | 5957-48501 | 3718 |

35690 7590 10/12/2010
MEYERTONS, HOOD, KIVLIN, KOWERT & GOETZEL, P.C.
P.O. BOX 398
AUSTIN, TX 78767-0398

| EXAMINER |
|---|
| LEVITAN, DMITRY |

| ART UNIT | PAPER NUMBER |
|---|---|
| 2461 | |

| NOTIFICATION DATE | DELIVERY MODE |
|---|---|
| 10/12/2010 | ELECTRONIC |

**Please find below and/or attached an Office communication concerning this application or proceeding.**

The time period for reply, if any, is set in the attached communication.

Notice of the Office communication was sent electronically on above-indicated "Notification Date" to the following e-mail address(es):

patent_docketing@intprop.com
ptomhkkg@gmail.com

UNITED STATES PATENT AND TRADEMARK OFFICE

Commissioner for Patents
United States Patent and Trademark Office
P.O. Box 1450
Alexandria, VA 22313-1450
www.uspto.gov

MEYERTONS, HOOD, KIVLIN, KOWERT & GOETZEL, P.C.
P.O. BOX 398
AUSTIN TX 78767-0398

**MAILED**

OCT 12 2010

DIRECTOR OFFICE
TECHNOLOGY CENTER 2400

In re Application of:
LEWIN et al.
Serial No.: 10/430,480
Filed: May 6, 2003
Docket: 5957-48501
Title: SYSTEM FOR ENCAPSULATING ETHERNET FRAMES OVER VERY HIGH SPEED DIGITAL SUBSCRIBER LINES

DECISION ON PETITION

This is a decision on the petition filed March 17, 2008, under 37 C.F.R. § 1. 181, requesting review of the examiner's objection made to Fig. 6, as contradict to the VDSL standard, and to the term "VDSL frame," as "repugnant" to the acceptable meaning, in the Office action of December 17, 2007 be reviewed and the examiner's position be reversed. The petition is before the Director of Technology Center 2400 for review.

The petition is **Granted**.

Petitioner asserts that in the Amendment of Nov. 19, 2007, Fig. 6 was amended back to its original form, and the specification was amended to distinguish the fixed-length "standard VDSL frames" over Applicants variable length "VDSL frames."

In support of the petition, petitioner relied on page 5 of the specification describing the fixed-length VDSL frames according to the ANSI T1E1.4 Subcommittee. The petitioner also relied on page 10 of the specification to show that the term "VDSL frame" was intended to denote a frame having a variable length transmitted over the VDSL transported facility.

A review of the application file reveals that the specification of the instant application, as originally filed, explicitly points out that "the term VDSL frame" is used to denote a frame of data having a variable length which varies in accordance with the length of the Ethernet frame encapsulated within. The specification also makes clear that the VDSL frame of the instant invention "should not be confused with the VDSL frame having a fixed length ... published by the ANSI T1E1.4 Subcommittee." Clearly, reading the specification, one of ordinary skill in the

UNITED STATES PATENT AND TRADEMARK OFFICE

UNITED STATES DEPARTMENT OF COMMERCE
United States Patent and Trademark Office
Address: COMMISSIONER FOR PATENTS
P.O. Box 1450
Alexandria, Virginia 22313-1450
www.uspto.gov

| APPLICATION NO. | FILING DATE | FIRST NAMED INVENTOR | ATTORNEY DOCKET NO. | CONFIRMATION NO. |
|---|---|---|---|---|
| 10/430,480 | 05/06/2003 | Amit Lewin | 5957-48501 | 3718 |

35690 7590 11/15/2010
MEYERTONS, HOOD, KIVLIN, KOWERT & GOETZEL, P.C.
P.O. BOX 398
AUSTIN, TX 78767-0398

| EXAMINER |
|---|
| LEVITAN, DMITRY |

| ART UNIT | PAPER NUMBER |
|---|---|
| 2461 | |

| NOTIFICATION DATE | DELIVERY MODE |
|---|---|
| 11/15/2010 | ELECTRONIC |

**Please find below and/or attached an Office communication concerning this application or proceeding.**

The time period for reply, if any, is set in the attached communication.

Notice of the Office communication was sent electronically on above-indicated "Notification Date" to the following e-mail address(es):

patent_docketing@intprop.com
ptomhkkg@gmail.com

UNITED STATES PATENT AND TRADEMARK OFFICE

Commissioner for Patents
United States Patent and Trademark Office
P.O. Box 1450
Alexandria, VA 22313-1450
www.uspto.gov

MEYERTONS, HOOD, KIVLIN, KOWERT & GOETZEL, P.C.
P.O. BOX 398
AUSTIN TX 78767-0398

MAILED

OCT 12 2010

DIRECTOR OFFICE
TECHNOLOGY CENTER 2400

In re Application of:
LEWIN et al.
Serial No.: 10/430,480
Filed: May 6, 2003
Docket: 5957-48501
Title: SYSTEM FOR ENCAPSULATING ETHERNET FRAMES OVER VERY HIGH SPEED DIGITAL SUBSCRIBER LINES

DECISION ON PETITION

This is a decision on the petition filed March 17, 2008, under 37 C.F.R. § 1. 181, requesting review of the examiner's objection made to Fig. 6, as contradict to the VDSL standard, and to the term "VDSL frame," as "repugnant" to the acceptable meaning, in the Office action of December 17, 2007 be reviewed and the examiner's position be reversed. The petition is before the Director of Technology Center 2400 for review.

The petition is **Granted.**

Petitioner asserts that in the Amendment of Nov. 19, 2007, Fig. 6 was amended back to its original form, and the specification was amended to distinguish the fixed-length "standard VDSL frames" over Applicants variable length "VDSL frames."

In support of the petition, petitioner relied on page 5 of the specification describing the fixed-length VDSL frames according to the ANSI T1E1.4 Subcommittee. The petitioner also relied on page 10 of the specification to show that the term "VDSL frame" was intended to denote a frame having a variable length transmitted over the VDSL transported facility.

A review of the application file reveals that the specification of the instant application, as originally filed, explicitly points out that "the term VDSL frame" is used to denote a frame of data having a variable length which varies in accordance with the length of the Ethernet frame encapsulated within. The specification also makes clear that the VDSL frame of the instant invention "should not be confused with the VDSL frame having a fixed length ... published by the ANSI T1E1.4 Subcommittee." Clearly, reading the specification, one of ordinary skill in the

art will not have any issues with the terms "VDSL frame" and "standard VDSL frame," as used in the specification. In addition, Fig. 6 depicts the variable length frame of the instant invention, not the standard VDSL frame, and thus, Fig. 6 does not contradict to the VDSL standard.

The petitioner's arguments are found persuasive, and the objection made to Fig. 6 and the specification is hereby withdrawn. The specification and drawing amendments filed on Nov. 19, 2007 are acceptable.

Any inquiry regarding this decision should be directed to Huy Vu, Supervisory Patent Examiner, at (571) 272-3155.

Valencia Martin-Wallace, TC Director
Technology Center 2400
Networks, Multiplexing, Cable and Security

UNITED STATES PATENT AND TRADEMARK OFFICE

COMMISSIONER FOR PATENTS
UNITED STATES PATENT AND TRADEMARK OFFICE
P.O. BOX 1450
ALEXANDRIA, VA 22313-1450
www.uspto.gov

Paper No.

MAILED
OCT 04 2010
OFFICE OF PETITIONS

SCHWEGMAN, LUNDBERG & WOESSNER, P.A.
P.O. BOX 2938
MINNEAPOLIS MN 55402

| | | |
|---|---|---|
| In re Application of | : | |
| Isaacson et al. | : | DECISION ON REQUEST |
| Application No. 10/430,542 | : | FOR RECONSIDERATION OF |
| Patent No. 7,571,172 | : | PATENT TERM ADJUSTMENT |
| Filed: May 6, 2003 | : | And |
| Issued: August 4, 2009 | : | NOTICE OF INTENT TO ISSUE |
| Atty Docket No.: 1565.050US1 | : | CERTIFICATE OF CORRECTION |
| Title: METHODS, DATA STORES, | : | |
| DATA STRUCTURES, AND SYSTEMS | : | |
| FOR ELECTRONIC IDENTITY | | |
| AGGREGATION | | |

This is a decision on the "APPLICATION FOR PATENT TERM ADJUSTMENT UNDER 37 C.F.R. § 1.705(b)," which is being treated as a petition pursuant to 37 C.F.R. § 1.705(d). This petition was filed on May 20, 2010, requesting that the patent term adjustment indicated on the above-identified patent be corrected to indicate that the term of the above-identified patent is extended or adjusted by one thousand and thirty-three (1033) days.

The petition to correct the patent term adjustment indicated on the above-identified patent to indicate that the term of the above-identified patent is extended or adjusted by five hundred and ninety-nine (599) days is **GRANTED to the extent indicated herein**.

Application No. 10/430,542 matured into U.S. patent No. 7,571,172 on August 4, 2009, with a patent term adjustment of 1081 days. On January 31, 2010, Patentee filed a Request for Recalculation of Patent Term Adjustment in view of Wyeth. On April 20, 2010, the Office mailed a "DECISION ON REQUEST FOR RECALCULATION of PATENT TERM ADJUSTMENT IN VIEW OF WYETH AND NOTICE OF INTENT TO ISSUE CERTIFICATE OF CORRECTION," indicating

that the patent term adjustment had been determined to be 489 days.

Patentee has indicated that this patent is not subject to a terminal disclaimer.

The Office agrees that the applicant delay totals three days.

The examination delay totals 492 days, not 924[1]: the application was filed on May 6, 2003, and a non-final office action was mailed 14 months and 492 days later. As such, an adjustment of 492 days is warranted, pursuant to 37 C.F.R. § 1.703(a)(1).

A notice of appeal was filed on June 30, 2006, and a Decision on Appeal was mailed on February 26, 2009. The 973 days of the over three year period consumed by appellate review, beginning on June 30, 2006 and ending on February 26, 2009, are not included in the B delay. See 35 U.S.C. § 154(b)(1)(B)(ii).

It follows that the B-delay totals 110 (1083 days over three years minus the aforementioned 973 days that are excluded minus zero days of overlap) days, not 112 days.

As such, the patent term adjustment is increased by 599 (492 days of examination delay plus 110 B-delay minus three days of applicant delay) days, not 1033 days.

The Office notes that the decision of April 20, 2010 was issued in error as it accorded Patentee 110 fewer days of patent term adjustment than was warranted. The present decision supersedes the decision mailed on April 20, 2010.

The Office has determined that the patent term adjustment for the above-identified patent is **599 days**. One hundred and ten additional days of adjustment will be added.

The Office will *sua sponte* issue a certificate of correction. Pursuant to 37 CFR 1.322, the Office will not issue a certificate of correction without first providing assignee or Patentee an opportunity to be heard. Accordingly, Patentee is given **one (1) month or thirty (30) days**, whichever is longer, from the mail date of this decision to respond. No extensions of time will be granted under § 1.136.

---

[1] Patentee has not explained how he arrived at this number.

This patent is being forwarded to the Certificates of Correction Branch for issuance of a certificate of correction. The Office will issue a certificate of correction indicating that the term of the above-identified patent is extended or adjusted by **five hundred and ninety-nine (599) days**.

The Office acknowledges submission of the $200.00 fee set forth in 37 C.F.R. § 1.18(e). No additional fees are required.

Any response to this decision should indicate in a prominent manner that the attorney handling this matter is Paul Shanoski, and may be submitted by mail,[2] hand-delivery,[3] or facsimile.[4] Registered users of EFS-Web may alternatively submit a response to this decision via EFS-Web.[5]

Telephone inquiries specific to this matter should be directed to the undersigned at (571) 272-3225.

/Paul Shanoski/
Paul Shanoski
Senior Attorney
Office of Petitions

Enclosure: Copy of DRAFT Certificate of Correction

---

[2] Mail Stop Petition, Commissioner for Patents, United States Patent and Trademark Office, P.O. Box 1450, Alexandria, VA, 22313-1450.
[3] Customer Window, Randolph Building, 401 Dulaney Street, Alexandria, VA, 22314.
[4] (571) 273-8300 - please note this is a central facsimile number.
[5] https://sportal.uspto.gov/authenticate/authenticateuserlocalepf.html

UNITED STATES PATENT AND TRADEMARK OFFICE

# CERTIFICATE OF CORRECTION

PATENT : 7,571,172 B2

DATED : **August 4, 2009** **DRAFT**

INVENTOR(S) : Isaacson et al.

It is certified that error appears in the above-identified patent and that said Letters Patent is hereby corrected as shown below:

On the cover page,

[*] Notice: Subject to any disclaimer, the term of this patent is extended or adjusted under 35 USC 154(b) by 482 days

Delete the phrase "by 482 days" and insert – by 599 days--

UNITED STATES PATENT AND TRADEMARK OFFICE

Commissioner for Patents
United States Patent and Trademark Office
P.O. Box 1450
Alexandria, VA 22313-1450
www.uspto.gov

MAILED

APR 08 2011

OFFICE OF PETITIONS

**GIFFORD, KRASS, SPRINKLE**
**ANDERSON & CITKOWSKI, P.C.**
**PO BOX 7021**
**TROY MI 48007-7021**

| | | |
|---|---|---|
| In re Application of | : | |
| MASINI | : | |
| Application No. 10/430,548 | : | ON PETITION |
| Filed: May 6, 2003 | : | |
| Attorney Docket No. MED-05703/29 | : | |

This is a decision on the petition under the unintentional provisions of 37 CFR 1.137(b), filed January 19, 2011, to revive the above-identified application.

The petition is **DISMISSED**.

The application became abandoned for failure to timely file a reply within the meaning of 37 CFR 1.113 to the final Office action of March 22, 2010. The proposed reply required for consideration of a petition to revive must be a Notice of Appeal (and appeal fee required by 37 CFR 41.20(b)(2)), an amendment that *prima facie* places the application in condition for allowance, a Request for Continued Examination (RCE) and submission (37 CFR 1.114), or the filing of a continuing application under 37 CFR 1.53(b). *See* MPEP 711.03(c)(III)(A)(2). Since the amendment submitted does not *prima facie* place the application in condition for allowance (see attached Advisory Action), the reply required must be a Notice of Appeal (and appeal fee), RCE, or the filing of a continuing application under 37 CFR 1.53(b).

The application file does not indicate a change of address has been filed in this case, although the address given on the petition differs from the address of record. A change of address should be filed in this case in accordance with MPEP 601.03. A courtesy copy of this decision is being mailed to the address noted on the petition. However, until otherwise instructed, all future correspondence regarding this application will be mailed solely to the address of record.

Any request for reconsideration of this decision must be submitted within **TWO (2) MONTHS** from the mail date of this decision. Extensions of time under 37 CFR 1.136(a) are permitted. The reconsideration request should include a cover letter entitled "Renewed Petition under 37 CFR 1.137(b)." This is **not** a final agency action within the meaning of 5 U.S.C. § 704.

Further correspondence with respect to this matter should be addressed as follows:

By Mail: Mail Stop PETITION
Commissioner for Patents
P. O. Box 1450
Alexandria, VA 22313-1450

By hand: U. S. Patent and Trademark Office
Customer Service Window, Mail Stop Petitions
Randolph Building
401 Dulany Street
Alexandria, VA 22314

The centralized facsimile number is **(571) 273-8300.**

Telephone inquiries concerning this decision should be directed to the undersigned at (571) 272-6735.

/Diane C. Goodwyn/
Diane C. Goodwyn
Petitions Examiner
Office of Petitions

cc: GIFFORD, KRASS SPRINKLE,
ANDERSON & CITKOWSKI, P.C.
2701 TROY CENTER DRIVE, SUITE 330
POST OFFICE BOX 7021
TROY, MI 48007-7021

Attachment: Advisory Action

| Advisory Action Before the Filing of an Appeal Brief | Application No. | Applicant(s) | |
|---|---|---|---|
| | 10/430,548 | MASINI, MICHAEL A. | |
| | Examiner | Art Unit | |
| | CHRISTOPHER D. PRONE | 3738 | |

***--The MAILING DATE of this communication appears on the cover sheet with the correspondence address --***

THE REPLY FILED 19 January 2011 FAILS TO PLACE THIS APPLICATION IN CONDITION FOR ALLOWANCE.

1. ☒ The reply was filed after a final rejection, but prior to or on the same day as filing a Notice of Appeal. To avoid abandonment of this application, applicant must timely file one of the following replies: (1) an amendment, affidavit, or other evidence, which places the application in condition for allowance; (2) a Notice of Appeal (with appeal fee) in compliance with 37 CFR 41.31; or (3) a Request for Continued Examination (RCE) in compliance with 37 CFR 1.114. The reply must be filed within one of the following time periods:
   a) ☒ The period for reply expires 6 months from the mailing date of the final rejection.
   b) ☐ The period for reply expires on: (1) the mailing date of this Advisory Action, or (2) the date set forth in the final rejection, whichever is later. In no event, however, will the statutory period for reply expire later than SIX MONTHS from the mailing date of the final rejection.

   Examiner Note: If box 1 is checked, check either box (a) or (b). ONLY CHECK BOX (b) WHEN THE FIRST REPLY WAS FILED WITHIN TWO MONTHS OF THE FINAL REJECTION. See MPEP 706.07(f).

Extensions of time may be obtained under 37 CFR 1.136(a). The date on which the petition under 37 CFR 1.136(a) and the appropriate extension fee have been filed is the date for purposes of determining the period of extension and the corresponding amount of the fee. The appropriate extension fee under 37 CFR 1.17(a) is calculated from: (1) the expiration date of the shortened statutory period for reply originally set in the final Office action; or (2) as set forth in (b) above, if checked. Any reply received by the Office later than three months after the mailing date of the final rejection, even if timely filed, may reduce any earned patent term adjustment. See 37 CFR 1.704(b).

NOTICE OF APPEAL

2. ☐ The Notice of Appeal was filed on _____. A brief in compliance with 37 CFR 41.37 must be filed within two months of the date of filing the Notice of Appeal (37 CFR 41.37(a)), or any extension thereof (37 CFR 41.37(e)), to avoid dismissal of the appeal. Since a Notice of Appeal has been filed, any reply must be filed within the time period set forth in 37 CFR 41.37(a).

AMENDMENTS

3. ☒ The proposed amendment(s) filed after a final rejection, but prior to the date of filing a brief, will not be entered because
   (a) ☒ They raise new issues that would require further consideration and/or search (see NOTE below);
   (b) ☐ They raise the issue of new matter (see NOTE below);
   (c) ☐ They are not deemed to place the application in better form for appeal by materially reducing or simplifying the issues for appeal; and/or
   (d) ☐ They present additional claims without canceling a corresponding number of finally rejected claims.

   NOTE: *See Continuation Sheet*. (See 37 CFR 1.116 and 41.33(a)).
4. ☐ The amendments are not in compliance with 37 CFR 1.121. See attached Notice of Non-Compliant Amendment (PTOL-324).
5. ☐ Applicant's reply has overcome the following rejection(s): _____.
6. ☐ Newly proposed or amended claim(s) _____ would be allowable if submitted in a separate, timely filed amendment canceling the non-allowable claim(s).
7. ☒ For purposes of appeal, the proposed amendment(s): a) ☒ will not be entered, or b) ☐ will be entered and an explanation of how the new or amended claims would be rejected is provided below or appended.
   The status of the claim(s) is (or will be) as follows:
   Claim(s) allowed: _____.
   Claim(s) objected to: _____.
   Claim(s) rejected: *2,10,13-16,22-24 and 29-34*.
   Claim(s) withdrawn from consideration: *11,20 and 25-28*.

AFFIDAVIT OR OTHER EVIDENCE

8. ☐ The affidavit or other evidence filed after a final action, but before or on the date of filing a Notice of Appeal will not be entered because applicant failed to provide a showing of good and sufficient reasons why the affidavit or other evidence is necessary and was not earlier presented. See 37 CFR 1.116(e).
9. ☐ The affidavit or other evidence filed after the date of filing a Notice of Appeal, but prior to the date of filing a brief, will not be entered because the affidavit or other evidence failed to overcome all rejections under appeal and/or appellant fails to provide a showing a good and sufficient reasons why it is necessary and was not earlier presented. See 37 CFR 41.33(d)(1).
10. ☐ The affidavit or other evidence is entered. An explanation of the status of the claims after entry is below or attached.

REQUEST FOR RECONSIDERATION/OTHER

11. ☐ The request for reconsideration has been considered but does NOT place the application in condition for allowance because: _____.
12. ☐ Note the attached Information *Disclosure Statement*(s). (PTO/SB/08) Paper No(s). _____
13. ☐ Other: _____.

/Christopher D Prone/
Examiner, Art Unit 3738

Continuation of 3. NOTE: The amendments better define the femoral component and the cam extension structure, which will require further search and consideration for possible prior art, 101, and 112 rejections.

UNITED STATES PATENT AND TRADEMARK OFFICE

Commissioner for Patents
United States Patent and Trademark Office
P.O. Box 1450
Alexandria, VA 22313-1450
www.uspto.gov

MAILED
JUL 05 2011
OFFICE OF PETITIONS

**GIFFORD, KRASS, SPRINKLE, ANDERSON & CITKOWSKI, P.C.**
**PO BOX 7021**
**TROY MI 48007-7021**

| | | |
|---|---|---|
| In re Application of | : | |
| MASINI | : | |
| Application No. 10/430,548 | : | **DECISION ON PETITION** |
| Filed: May 6, 2003 | : | |
| Attorney Docket No. MED-05703/29 | : | |

This is a decision on the renewed petition under the unintentional provisions of 37 CFR 1.137(b), filed June 7, 2011, to revive the above-identified application.

The petition is **GRANTED**.

The application became abandoned for failure to timely file a reply within the meaning of 37 CFR 1.113 to the final Office action of March 22, 2010. The proposed reply required for consideration of a petition to revive must be a Notice of Appeal (and appeal fee required by 37 CFR 41.20(b)(2), an amendment that *prima facie* places the application in condition for allowance, a Request for Continued Examination and submission (37 CFR 1.114), or the filing of a continuing application under 37 CFR 1.53(b). See MPEP 711.03(c)(II)(A)(2). A three (3) month extension of time pursuant to the provisions of 37 CFR 1.136(a) was obtained. Accordingly, the date of abandonment of this application is September 23, 2010. A Notice of Abandonment was mailed December 30, 2010.

The petition satisfies the requirements of 37 CFR 1.137(b) in that petitioner has supplied (1) the reply in the form of a Request for Continued Examination (RCE) and fee of $405, and the submission required by 37 CFR 1.114; (2) the petition fee of $810; and (3) a statement of unintentional delay.

Telephone inquiries concerning this decision should be directed to the undersigned at (571) 272-6735.

This application is being referred to Technology Center AU 3738 for processing of the RCE and for appropriate action by the Examiner in the normal course of business on the amendment submitted in accordance with 37 CFR 1.114.

/Diane C. Goodwyn/
Diane C. Goodwyn
Petitions Examiner
Office of Petitions

UNITED STATES PATENT AND TRADEMARK OFFICE

Commissioner for Patents
United States Patent and Trademark Office
P.O. Box 1450
Alexandria, VA 22313-1450
www.uspto.gov

**IGOR KOBA**
**845 SEVELY DR.**
**MOUNTAINVIEW, CA 94041**

MAILED
DEC 10 2010
OFFICE OF PETITIONS

| | | |
|---|---|---|
| Patent No. 6,819,469 | : | ON PETITION |
| Application No. 10/430,615 | : | |
| Filed: May 5, 2003 | : | |
| Issued: November 16, 2004 | : | |
| Attorney Docket No. K003.P001U1 | : | |

This is a decision on the petition under 37 CFR 1.378(c), filed November 8, 2010, to accept the unintentionally delayed payment of a maintenance fee for the above-identified patent.

The petition is **GRANTED**.

The patent issued November 16, 2004. The last day of the grace period for paying the 3.5-year maintenance fee was November 16, 2008. Therefore, since this petition was filed within twenty-four months after the six-month grace period provided in 37 CFR 1.362(e), this petition was timely filed under the provisions of 37 CFR 1.378(c).

**The maintenance fee is hereby accepted and the above-identified patent is reinstated as of the mail date of this decision.**

Telephone inquiries concerning this decision should be directed to the undersigned at (571) 272-3206.

Liana Walsh
Petitions Examiner
Office of Petitions

| **Doc Code: PET.AUTO**<br>**Document Description: Petition automatically granted by EFS-Web** | PTO/SB/141<br>U.S. Patent and Trademark Office<br>Department of Commerce |
|---|---|

| | |
|---|---|
| Electronic Petition Request | **Petition to Correct Assignee After Payment of Issue Fee (37 CFR 3.81(b))** |
| Application Number | 10430674 |
| Filing Date | 07-May-2003 |
| First Named Inventor | Robert Thomas |
| Attorney Docket Number | 10761.1517 |
| Title of Invention | HUMAN CAPITAL DEVELOPMENT FRAMEWORK |

Pursuant to 37 CFR 3.81(b), applicant hereby request that the listed assignee with respect to U.S. Patent Number 8095415 be corrected to accurately reflect the name of the assignee on the front page of the above-identified patent by way of a Certificate of Correction.

☒ I certify, in accordance with 37 CFR 1.4(d)(4), that the assignment was submitted for recordation as set forth in 37 CFR 3.11 before issuance of the patent.

**Correction of Assignee**

Current Assignment Listed (240 char limit)
The assignment information is currently listed as:

Accenture Global Services GmbH

Update Assignment Listing to (240 char limit)

Change assignment information to the following:

Accenture Global Services Limited

☒ As required by 37 CFR 3.81, a Request for a Certificate of Correction is being filed herewith, along with the fee set forth in 37 CFR 1.20(a).

- ◯ Applicant(s) status remains as OTHER THAN small entity.
- ◯ Applicant claims SMALL ENTITY status. See 37 CFR 1.27.
- ◯ Applicant(s) status remains as SMALL ENTITY.
- ◉ Applicant is no longer claiming small entity status. See 37 CFR 1.27(g)(2).

I hereby declare that all statements made herein of my own knowledge are true and that all statements made on information and belief are believed to be true; and further that these statements were made with the knowledge that willful false statements and the like so made are punishable by fine or imprisonment, or both, under Section 1001 of Title 18 of the United States Code and that such willful false statements may jeopardize the validity of the application or any patent issued thereon.

THIS PORTION MUST BE COMPLETED BY THE SIGNATORY OR SIGNATORIES

I certify, in accordance with 37 CFR 1.4(d)(4) that I am:

- ◉ An attorney or agent registered to practice before the Patent and Trademark Office who has been given power of attorney in this application.
- ◯ An attorney or agent registered to practice before the Patent and Trademark Office, acting in a representative capacity.
- ◯ A sole inventor
- ◯ A joint inventor; I certify that I am authorized to sign this submission on behalf of all of the inventors
- ◯ A joint inventor; all of whom are signing this request
- ◯ The assignee of record of the entire interest that has properly made itself of record pursuant to 37 CFR 3.71

| | |
|---|---|
| Signature | /Erika H Arner/ |
| Name | Erika H. Arner |
| Registration Number, if applicable | 57540 |

# UNITED STATES PATENT AND TRADEMARK OFFICE

Commissioner for Patents
United States Patent and Trademark Office
P.O. Box 1450
Alexandria, VA 22313-1450
www.uspto.gov

| | |
|---|---|
| Decision Date: | March 13, 2012 |
| In re Patent No. | 8095415 |
| Issue Date: | 10-Jan-2012 |
| Application No | 10430674 |
| Filed date | 07-May-2003 |
| Attorney Docket No | 10761.1517 |

DECISION ON REQUEST
UNDER 37 CFR 3.81(b)

This is an electronic decision on the request filed March 13, 2012 under 37 CFR 3.81(b) to correct the name of the assignee of the above-identified patent by way of a Certificate of Correction.

Petitioner request that the listed assignment information be replace with updated assignment information.
Assignment Information Currently Listed As:

Accenture Global Services GmbH

Change Assignment Information to the Following:

Accenture Global Services Limited

The request is GRANTED.

Telephone inquiries concerning this decision may be directed to the the Patent Electronic Business Center (EBC) at 866-217-9197.

Inquiries regarding the issuance of a Certificate of Correction should be directed to the Certificate of Correction Branch at (571) 272-4200.

The Certificate of Correction Branch will be notified of this decision granting the request under 37 CFR 3.81(b) and directing issuance of the requested Certificate of Correction.

Office of Petitions

UNITED STATES PATENT AND TRADEMARK OFFICE

Commissioner for Patents
United States Patent and Trademark Office
P.O. Box 1450
Alexandria, VA 22313-1450
www.uspto.gov

MEDLEN & CARROLL, LLP
101 HOWARD STREET
SUITE 350
SAN FRANCISCO CA 94105

**MAILED**

MAR 15 2011

OFFICE OF PETITIONS

In re Application of
Gerald C. Smaldone et al.
Application No. 10/430,765
Filed: May 6, 2003
Attorney Docket No. STONYB-08014

ON PETITION

This is a decision on the petition under 37 CFR 1.137(b)[1], filed February 8, 2011, to revive the above-identified application.

The petition is **GRANTED**.

This application became abandoned for failure to timely reply to the Final Office Action mailed July 19, 2010. A response was filed January 18, 2011 with a three month extension of time, but by Advisory Action of January 31, 2011, petitioner was advised that the response did not place the application in condition for allowance. The instant petition and this decision precede the mailing of the Notice of Abandonment.

Petitioner has submitted a Request for Continued Examination (RCE) with a request that the previously filed amendment be considered as the submission required under 37 CFR 1.114.

This matter is being referred to Technology Center 3771 for processing of the RCE.

Telephone inquiries related to this decision should be directed to the undersigned Petitions Attorney at (571) 272-3212.

Patricia Faison-Ball
Senior Petitions Attorney
Office of Petitions

---

[1]Effective December 1, 1997, the provisions of 37 CFR 1.137(b) now provide that where the delay in reply was unintentional, a petition may be filed to revive an abandoned application or a lapsed patent pursuant to 37 CFR 1.137(b). A grantable petition filed under the provisions of 37 CFR 1.137(b) must be accompanied by:

(1) the required reply, unless previously filed. In a nonprovisional application abandoned for failure to prosecute, the required reply may be met by the filing of a continuing application. In an application or patent, abandoned or lapsed for failure to pay the issue fee or any portion thereof, the required reply must be the payment of the issue fee or any outstanding balance thereof.

(2) the petition fee as set forth in 37 CFR 1.17(m);

(3) a statement that the entire delay in filing the required reply from the due date for the reply until the filing of a grantable petition pursuant to 37 CFR 1.137(b) was unintentional. The Director may require additional information where there is a question whether the delay was unintentional; and

(4) any terminal disclaimer (and fee as set forth in 37 CFR 1.20(d)) required pursuant to 37 CFR 1.137(c)).

UNITED STATES PATENT AND TRADEMARK OFFICE

Commissioner for Patents
United States Patent and Trademark Office
P.O. Box 1450
Alexandria, VA 22313-1450
www.uspto.gov

Decision Date : June 17,2011

In re Application of :

Chad Mirkin

Application No : 10431341

Filed : 07-May-2003

Attorney Docket No : 02-338-C

DECISION ON PETITION

UNDER CFR 1.137(b)

This is an electronic decision on the petition under 37 CFR 1.137(b), filed June 17,2011 , to revive the above-identified application.

The petition is **GRANTED.**

The above-identified application became abandoned for failure to reply in a timely manner to the Notice of Allowance and Issue Fee(s) Due. The date of abandonment is the day after the expiration date of the period set for reply in the Notice.

The electronic petition satisfies the conditions for revival pursuant to the provisions of 37 CFR 1.137(b) in that (1) the reply in the form of payment of the Issue Fee and the Publication Fee (if necessary); (2) the petition fee as set forth in 37 CFR 1.17 (m); (3) the drawing correction and/or other deficiencies (if necessary); and (4) the required statement of unintentional delay have been received. Accordingly, the Issue Fee payment is accepted as having been unintentionally delayed.

It is not apparent whether the person signing the statement of unintentional delay was in a position to have firsthand or direct knowledge of the facts and circumstances of the delay at issue. Nevertheless, such statement is being treated as having been made as the result of a reasonable inquiry into the facts and circumstances of such delay. See 37 CFR 10.18(b) and Changes to Patent Practice and Procedure; Final Rule Notice, 62 Fed. Reg. 53131, 53178 (October 10, 1997), 1203 Off. Gaz. Pat. Office 63, 103 (October 21, 1997). In the event that such an inquiry has not been made, petitioner must make such an inquiry. If such inquiry results in the discovery that it is not correct that the entire delay in filing the required reply from the due date for the reply until the filing of a grantable petition pursuant to 37 CFR 1.137(b) was unintentional, petitioner must notify the Office.

Telephone inquiries concerning this decision should be directed to the Patent Electronic Business Center (EBC) at 866-217-9197.

This application file is being directed to the Office of Data Management.

Office of Petitions

| Doc Code: PET.AUTO<br>Document Description: Petition automatically granted by EFS-Web | PTO/SB/64<br>U.S. Patent and Trademark Office<br>Department of Commerce |
|---|---|

| | |
|---|---|
| Electronic Petition Request | PETITION FOR REVIVAL OF AN APPLICATION FOR PATENT ABANDONED UNINTENTIONALLY UNDER 37 CFR 1.137(b) |
| Application Number | 10431341 |
| Filing Date | 07-May-2003 |
| First Named Inventor | Chad Mirkin |
| Art Unit | 1634 |
| Examiner Name | JULIET SWITZER |
| Attorney Docket Number | 02-338-C |
| Title | NANOPARTICLE PROBES WITH RAMAN SPECTROSCOPIC FINGERPRINTS FOR ANALYTE DETECTION |

The above-identified application became abandoned for failure to file a timely and proper reply to a notice or action by the United States Patent and Trademark Office. The date of abandonment is the day after the expiration date of the period set for reply in the office notice or action plus any extensions of time actually obtained.

APPLICANT HEREBY PETITIONS FOR REVIVAL OF THIS APPLICATION

NOTE: A grantable petition requires the following items:
(1) Petition fee;
(2) Reply and/or issue fee;
(3) Terminal disclaimer with disclaimer fee – required for all utility and plant applications filed before June 8, 1995; and for all design applications;
(4) Statement that the entire delay was unintentional.

Petition fee
The petition fee under 37CFR 1.17(m) is attached.

☐ Applicant claims SMALL ENTITY status. See 37 CFR 1.27.

☐ Applicant is no longer claiming SMALL ENTITY status. See 37 CFR 1.27(g)(2).

☒ Applicant(s) status remains as SMALL ENTITY.

☐ Applicant(s) status remains as other than SMALL ENTITY.

**Issue Fee and Publication Fee :**

Issue Fee and Publication Fee must accompany ePetition.

☒ Issue Fee Transmittal is attached

**Drawing corrections and/ or other deficiencies.**

- (●) Drawing corrections and/ or other deficiencies are not required
- ( ) I certify, in accordance with 37 CFR 1.4.(D)(4), that drawing corrections and/ or other deficiencies have previously been filed on
- ( ) Drawing corrections and/ or other deficiencies are attached.
- [x] STATEMENT: The entire delay in filing the required reply from the due date for the required reply until the filing of a grantable petition under 37 CFR 1.137(b) was unintentional.

THIS PORTION MUST BE COMPLETED BY THE SIGNATORY OR SIGNATORIES

I certify, in accordance with 37 CFR 1.4(d)(4) that I am:

- ( ) An attorney or agent registered to practice before the Patent and Trademark Office who has been given power of attorney in this application.
- (●) An attorney or agent registered to practice before the Patent and Trademark Office, acting in a representative capacity.
- ( ) A sole inventor
- ( ) A joint inventor; I certify that I am authorized to sign this submission on behalf of all of the inventors.
- ( ) A joint inventor; all of whom are signing this e-petition.
- ( ) The assignee of record of the entire interest that has properly made itself of record pursuant to 37 CFR 3.71.

| | |
|---|---|
| Signature | /Gregory Pletta/ |
| Name | Gregory Pletta |
| Registration Number | 47864 |

PTO/SB/66 (03-09)
Approved for use through 03/31/2012. OMB 0651-0016
U.S. Patent and Trademark Office: U.S. DEPARTMENT OF COMMERCE
Under the Paperwork Reduction Act of 1995, no persons are required to respond to a collection of information unless it displays valid OMB control number.

# PETITION TO ACCEPT UNINTENTIONALLY DELAYED PAYMENT OF MAINTENANCE FEE IN AN EXPIRED PATENT (37 CFR 1.378(c))

| Patent Number | Issue Date (YYYY-MM-DD) | Application Number | Filing Date (YYYY-MM-DD) | Docket Number (if applicable) |
|---|---|---|---|---|
| 6939937 | 2005-09-06 | 10/431,488 | 2003-05-06 | MLEX-30724 |

CAUTION: Maintenance fee (and surcharge, if any) payment must correctly identify: (1) the patent number and (2) the application number of the actual U.S. application leading to issuance of that patent to ensure the fee(s) is/are associated with the correct patent. 37 CFR 1.366(c) and (d).

SMALL ENTITY
☒ Patentee claims, or has previously claimed, small entity status. See 37 CFR 1.27.

LOSS OF ENTITLEMENT TO SMALL ENTITY STATUS
☐ Patentee is no longer entitled to small entity status. See 37 CFR 1.27(g)

| NOT Small Entity | Fee | Code | Small Entity | Fee | Code |
|---|---|---|---|---|---|
| ○ | 3 ½ year | (1551) | ◉ | 3 ½ year | (2551) |
| ○ | 7 ½ year | (1552) | ○ | 7 ½ year | (2552) |
| ○ | 11 ½ year | (1553) | ○ | 11 ½ year | (2553) |

SURCHARGE
The surcharge required by 37 CFR 1.20(i)(2) (Fee Code 1558) must be paid as a condition of accepting unintentionally delayed payment of the maintenance fee.

MAINTENANCE FEE (37 CFR 1.20(e)-(g))
The appropriate maintenance fee must be submitted with this petition.

STATEMENT
THE UNDERSIGNED CERTIFIES THAT THE DELAY IN PAYMENT OF THE MAINTENANCE FEE TO THIS PATENT WAS UNINTENTIONAL

PETITIONER(S) REQUEST THAT THE DELAYED PAYMENT OF THE MAINTENANCE FEE BE ACCEPTED AND THE PATENT REINSTATED

THIS PORTION MUST BE COMPLETED BY THE SIGNATORY OR SIGNATORIES

37 CFR 1.378(d) states: "Any petition under this section must be signed by an attorney or agent registered to practice before the Patent and Trademark Office, or by the patentee, the assignee, or other party in interest."

I certify, in accordance with 37 CFR 1.4(d)(4) that I am

◉ An attorney or agent registered to practice before the Patent and Trademark Office

○ A sole patentee

○ A joint patentee; I certify that I am authorized to sign this submission on behalf of all the other patentees.

○ A joint patentee; all of whom are signing this e-petition

○ The assignee of record of the entire interest

Under the Paperwork Reduction Act of 1995, no persons are required to respond to a collection of information unless it displays valid OMB control number.

| Patent Practitioner | | | |
|---|---|---|---|
| A signature of the applicant or representative is required in accordance with 37 CFR 1.33 and 10.18. Please see 37 CFR 1.4(d) for the form of the signature | | | |
| Signature | /Grady K. Bergen/ | Date (YYYY-MM-DD) | 2010-12-07 |
| Name | Grady K. Bergen | Registration Number | 37587 |

This collection of information is required by 37 CFR 1.378(c). The information is required to obtain or retain a benefit by the public which is to file (and by the USPTO to process) an application. Confidentiality is governed by 35 U.S.C. 122 and 37 CFR 1.11 and 1.14. This collection is estimated to take 1 hour to complete, including gathering, preparing, and submitting the completed application form to the USPTO. Time will vary depending upon the individual case. Any comments on the amount of time you require to complete this form and/ or suggestions for reducing this burden, should be sent to the Chief Information Officer, U.S. Patent and Trademark Office, U.S. Department of Commerce, P.O. Box 1450, Alexandria, VA 22313-1450. DO NOT SEND FEES OR COMPLETED FORMS TO THIS ADDRESS. **This form can only be used when in conjunction with EFS-Web. If this form is mailed to the USPTO, it may cause delays in reinstating the patent.**

# Privacy Act Statement

The Privacy Act of 1974 (P.L. 93-579) requires that you be given certain information in connection with your submission of the attached form related to a patent application or patent. Accordingly, pursuant to the requirements of the Act, please be advised that: (1) the general authority for the collection of this information is 35 U.S.C. 2(b)(2); (2) furnishing of the information solicited is voluntary; and (3) the principal purpose for which the information is used by the U.S. Patent and Trademark Office is to process and/or examine your submission related to a patent application or patent. If you do not furnish the requested information, the U.S. Patent and Trademark Office may not be able to process and/or examine your submission, which may result in termination of proceedings or abandonment of the application or expiration of the patent.

The information provided by you in this form will be subject to the following routine uses:

1. The information on this form will be treated confidentially to the extent allowed under the Freedom of Information Act (5 U.S.C. 552) and the Privacy Act (5 U.S.C. 552a). Records from this system of records may be disclosed to the Department of Justice to determine whether the Freedom of Information Act requires disclosure of these records.

2. A record from this system of records may be disclosed, as a routine use, in the course of presenting evidence to a court, magistrate, or administrative tribunal, including disclosures to opposing counsel in the course of settlement negotiations.

3. A record in this system of records may be disclosed, as a routine use, to a Member of Congress submitting a request involving an individual, to whom the record pertains, when the individual has requested assistance from the Member with respect to the subject matter of the record.

4. A record in this system of records may be disclosed, as a routine use, to a contractor of the Agency having need for the information in order to perform a contract. Recipients of information shall be required to comply with the requirements of the Privacy Act of 1974, as amended, pursuant to 5 U.S.C. 552a(m).

5. A record related to an International Application filed under the Patent Cooperation Treaty in this system of records may be disclosed, as a routine use, to the International Bureau of the World Intellectual Property Organization, pursuant to the Patent Cooperation Treaty.

6. A record in this system of records may be disclosed, as a routine use, to another federal agency for purposes of National Security review (35 U.S.C. 181) and for review pursuant to the Atomic Energy Act (42 U.S.C. 218(c)).

7. A record from this system of records may be disclosed, as a routine use, to the Administrator, General Services, or his/her designee, during an inspection of records conducted by GSA as part of that agency's responsibility to recommend improvements in records management practices and programs, under authority of 44 U.S.C. 2904 and 2906. Such disclosure shall be made in accordance with the GSA regulations governing inspection of records for this purpose, and any other relevant (i.e., GSA or Commerce) directive. Such disclosure shall not be used to make determinations about individuals.

8. A record from this system of records may be disclosed, as a routine use, to the public after either publication of the application pursuant to 35 U.S.C. 122(b) or issuance of a patent pursuant to 35 U.S.C. 151. Further, a record may be disclosed, subject to the limitations of 37 CFR 1.14, as a routine use, to the public if the record was filed in an application which became abandoned or in which the proceedings were terminated and which application is referenced by either a published application, an application open to public inspections or an issued patent.

9. A record from this system of records may be disclosed, as a routine use, to a Federal, State, or local law enforcement agency, if the USPTO becomes aware of a violation or potential violation of law or regulation.

UNITED STATES PATENT AND TRADEMARK OFFICE

Commissioner for Patents
United States Patent and Trademark Office
P.O. Box 1450
Alexandria, VA 22313-1450
www.uspto.gov

In re Patent No. 6939937
Issue Date: September 6,2005
Application No. 10431488
Filed: May 6,2003
Attorney Docket No. 7259-1 (FORMERLY 7032-86)

:
:DECISION GRANTING PETITION
:UNDER 37 CFR 1.378(c)
:

This is a decision on the electronic petition, filed December 7,2010 ,under 37 CFR 1.378(c) to accept the unintentionally delayed payment of the 3.5 year maintenance fee for the above-identified patent.

The petition is **GRANTED**.

The maintenance fee is accepted, and the above-identified patent reinstated as of December 7,2010 . This decision also constitutes notice that the fee has been accepted. An electronic copy of the petition and this decision has been created as an entry in the Image File Wrapper. Nevertheless, petitioner should print and retain an independent copy.

Telephone inquiries related to this electronic decision should be directed to the Electronic Business Center at 1-866-217-9197.

UNITED STATES PATENT AND TRADEMARK OFFICE

Commissioner for Patents
United States Patent and Trademark Office
P.O. Box 1450
Alexandria, VA 22313-1450
www.uspto.gov

In re Patent No. 7076031
Issue Date: July 11,2006
Application No. 10431493
Filed: May 5,2003
Attorney Docket No. 10152-001

:
:DECISION GRANTING PETITION
:UNDER 37 CFR 1.378(c)
:

This is a decision on the electronic petition, filed December 20,2010 ,under 37 CFR 1.378(c) to accept the unintentionally delayed payment of the 3.5 year maintenance fee for the above-identified patent.

The petition is **GRANTED**.

The maintenance fee is accepted, and the above-identified patent reinstated as of December 20,2010 . This decision also constitutes notice that the fee has been accepted. An electronic copy of the petition and this decision has been created as an entry in the Image File Wrapper. Nevertheless, petitioner should print and retain an independent copy.

Telephone inquiries related to this electronic decision should be directed to the Electronic Business Center at 1-866-217-9197.

PTO/SB/66 (03-09)
Approved for use through 03/31/2012. OMB 0651-0016
U.S. Patent and Trademark Office: U.S. DEPARTMENT OF COMMERCE
Under the Paperwork Reduction Act of 1995, no persons are required to respond to a collection of information unless it displays valid OMB control number.

# PETITION TO ACCEPT UNINTENTIONALLY DELAYED PAYMENT OF MAINTENANCE FEE IN AN EXPIRED PATENT (37 CFR 1.378(c))

| Patent Number | Issue Date (YYYY-MM-DD) | Application Number | Filing Date (YYYY-MM-DD) | Docket Number (if applicable) |
|---|---|---|---|---|
| 7076031 | 2006-07-11 | 10431493 | 2003-05-05 | 10152-001 |

CAUTION: Maintenance fee (and surcharge, if any) payment must correctly identify: (1) the patent number and (2) the application number of the actual U.S. application leading to issuance of that patent to ensure the fee(s) is/are associated with the correct patent. 37 CFR 1.366(c) and (d).

SMALL ENTITY
☒ Patentee claims, or has previously claimed, small entity status. See 37 CFR 1.27.

LOSS OF ENTITLEMENT TO SMALL ENTITY STATUS
☐ Patentee is no longer entitled to small entity status. See 37 CFR 1.27(g)

| NOT Small Entity | | Small Entity | |
|---|---|---|---|
| Fee | Code | Fee | Code |
| ○ 3 ½ year | (1551) | ◉ 3 ½ year | (2551) |
| ○ 7 ½ year | (1552) | ○ 7 ½ year | (2552) |
| ○ 11 ½ year | (1553) | ○ 11 ½ year | (2553) |

SURCHARGE
The surcharge required by 37 CFR 1.20(i)(2) (Fee Code 1558) must be paid as a condition of accepting unintentionally delayed payment of the maintenance fee.

MAINTENANCE FEE (37 CFR 1.20(e)-(g))
The appropriate maintenance fee must be submitted with this petition.

STATEMENT
THE UNDERSIGNED CERTIFIES THAT THE DELAY IN PAYMENT OF THE MAINTENANCE FEE TO THIS PATENT WAS UNINTENTIONAL

PETITIONER(S) REQUEST THAT THE DELAYED PAYMENT OF THE MAINTENANCE FEE BE ACCEPTED AND THE PATENT REINSTATED

THIS PORTION MUST BE COMPLETED BY THE SIGNATORY OR SIGNATORIES

37 CFR 1.378(d) states: "Any petition under this section must be signed by an attorney or agent registered to practice before the Patent and Trademark Office, or by the patentee, the assignee, or other party in interest."

I certify, in accordance with 37 CFR 1.4(d)(4) that I am

◉ An attorney or agent registered to practice before the Patent and Trademark Office

○ A sole patentee

○ A joint patentee; I certify that I am authorized to sign this submission on behalf of all the other patentees.

○ A joint patentee; all of whom are signing this e-petition

○ The assignee of record of the entire interest

Under the Paperwork Reduction Act of 1995, no persons are required to respond to a collection of information unless it displays valid OMB control number.

| Patent Practitioner | | | |
|---|---|---|---|
| A signature of the applicant or representative is required in accordance with 37 CFR 1.33 and 10.18. Please see 37 CFR 1.4(d) for the form of the signature | | | |
| Signature | /cqmcleod/ | Date (YYYY-MM-DD) | 2010-12-20 |
| Name | Christine McLeod | Registration Number | 36213 |

This collection of information is required by 37 CFR 1.378(c). The information is required to obtain or retain a benefit by the public which is to file (and by the USPTO to process) an application. Confidentiality is governed by 35 U.S.C. 122 and 37 CFR 1.11 and 1.14. This collection is estimated to take 1 hour to complete, including gathering, preparing, and submitting the completed application form to the USPTO. Time will vary depending upon the individual case. Any comments on the amount of time you require to complete this form and/ or suggestions for reducing this burden, should be sent to the Chief Information Officer, U.S. Patent and Trademark Office, U.S. Department of Commerce, P.O. Box 1450, Alexandria, VA 22313-1450. DO NOT SEND FEES OR COMPLETED FORMS TO THIS ADDRESS. **This form can only be used when in conjunction with EFS-Web. If this form is mailed to the USPTO, it may cause delays in reinstating the patent.**

# Privacy Act Statement

The Privacy Act of 1974 (P.L. 93-579) requires that you be given certain information in connection with your submission of the attached form related to a patent application or patent. Accordingly, pursuant to the requirements of the Act, please be advised that: (1) the general authority for the collection of this information is 35 U.S.C. 2(b)(2); (2) furnishing of the information solicited is voluntary; and (3) the principal purpose for which the information is used by the U.S. Patent and Trademark Office is to process and/or examine your submission related to a patent application or patent. If you do not furnish the requested information, the U.S. Patent and Trademark Office may not be able to process and/or examine your submission, which may result in termination of proceedings or abandonment of the application or expiration of the patent.

The information provided by you in this form will be subject to the following routine uses:

1. The information on this form will be treated confidentially to the extent allowed under the Freedom of Information Act (5 U.S.C. 552) and the Privacy Act (5 U.S.C. 552a). Records from this system of records may be disclosed to the Department of Justice to determine whether the Freedom of Information Act requires disclosure of these records.

2. A record from this system of records may be disclosed, as a routine use, in the course of presenting evidence to a court, magistrate, or administrative tribunal, including disclosures to opposing counsel in the course of settlement negotiations.

3. A record in this system of records may be disclosed, as a routine use, to a Member of Congress submitting a request involving an individual, to whom the record pertains, when the individual has requested assistance from the Member with respect to the subject matter of the record.

4. A record in this system of records may be disclosed, as a routine use, to a contractor of the Agency having need for the information in order to perform a contract. Recipients of information shall be required to comply with the requirements of the Privacy Act of 1974, as amended, pursuant to 5 U.S.C. 552a(m).

5. A record related to an International Application filed under the Patent Cooperation Treaty in this system of records may be disclosed, as a routine use, to the International Bureau of the World Intellectual Property Organization, pursuant to the Patent Cooperation Treaty.

6. A record in this system of records may be disclosed, as a routine use, to another federal agency for purposes of National Security review (35 U.S.C. 181) and for review pursuant to the Atomic Energy Act (42 U.S.C. 218(c)).

7. A record from this system of records may be disclosed, as a routine use, to the Administrator, General Services, or his/her designee, during an inspection of records conducted by GSA as part of that agency's responsibility to recommend improvements in records management practices and programs, under authority of 44 U.S.C. 2904 and 2906. Such disclosure shall be made in accordance with the GSA regulations governing inspection of records for this purpose, and any other relevant (i.e., GSA or Commerce) directive. Such disclosure shall not be used to make determinations about individuals.

8. A record from this system of records may be disclosed, as a routine use, to the public after either publication of the application pursuant to 35 U.S.C. 122(b) or issuance of a patent pursuant to 35 U.S.C. 151. Further, a record may be disclosed, subject to the limitations of 37 CFR 1.14, as a routine use, to the public if the record was filed in an application which became abandoned or in which the proceedings were terminated and which application is referenced by either a published application, an application open to public inspections or an issued patent.

9. A record from this system of records may be disclosed, as a routine use, to a Federal, State, or local law enforcement agency, if the USPTO becomes aware of a violation or potential violation of law or regulation.

UNITED STATES PATENT AND TRADEMARK OFFICE

Commissioner for Patents
United States Patent and Trademark Office
P.O. Box 1450
Alexandria, VA 22313-1450
www.uspto.gov

MAILED
SEP 13 2010
OFFICE OF PETITIONS

**MAYER BROWN LLP**
**P.O. Box. 2828**
**Chicago IL 60690**

| | | |
|---|---|---|
| In re Application of | : | |
| BAE, Hyon S. et al. | : | |
| Application No. 10/431,787 | : | DECISION ON PETITION |
| Filed: May 08, 2003 | : | TO WITHDRAW |
| Attorney Docket No. **P69318US0** | : | FROM RECORD |
| | : | |

This is a decision on the Request to Withdraw as attorney or agent of record under 37 C.F.R. § 1.36(b), filed August 05, 2010.

The request is **NOT APPROVED**.

The Office has revised its change in procedure for request to withdraw from representation applies to requests filed on or after May 12, 2008.

A grantable request to withdraw as attorney/agent of record must be signed by every attorney/agent seeking to withdraw or contain a clear indication that one attorney is signing on behalf of another/others. The Office requires the practitioner(s) requesting withdrawal to certify that he, she, or they have: (1) given reasonable notice to the client, prior to the expiration of the response period, that the practitioner(s) intends to withdraw from employment; (2) delivered to the client or a duly authorized representative of the client all papers and property (including funds) to which the client is entitled; and (3) notified the client of any responses that may be due and the time frame within which the client must respond, pursuant 37 CFR 10.40(c).

The request cannot be approved because no change of address was provided.

All future communications from the Office will continue to be directed to the above-listed address until otherwise notified by applicant.

Telephone inquiries concerning this decision should be directed to Tredelle Jackson at 571-272- 2783.

/Tredelle D. Jackson/
Paralegal Specialist
Office of Petitions

UNITED STATES PATENT AND TRADEMARK OFFICE

Commissioner for Patents
United States Patent and Trademark Office
P.O. Box 1450
Alexandria, VA 22313-1450
www.uspto.gov

MICROSOFT CORPORATION
ONE MICROSOFT WAY
REDMOND WA 98052-6399

MAILED
MAR 25 2011
OFFICE OF PETITIONS

| | | |
|---|---|---|
| In re Application of | : | |
| Adrian Robert Leigh Travis | : | |
| Patent No. 6,883,919 | : | |
| Issued: April 26, 2005 | : | NOTICE |
| Application No. 10/432,130 | : | |
| Filed: October 24, 2003 | : | |
| Attorney Docket No. **324118.06** | : | |

This is a notice regarding your request filed February 2, 2011, for acceptance of a fee deficiency submission under 37 CFR 1.28.

The Office no longer investigates or rejects original or reissue applications under 37 CFR 1.56. **1098 Off. Gaz. Pat. Office 502 (January 3, 1989)**. Therefore, nothing in this Notice is intended to imply that an investigation was done.

Your fee deficiency submission under 37 CFR 1.28 is hereby **ACCEPTED**.

This patent is no longer entitled to small entity status. Accordingly, all future fees paid in this patent must be paid at the large entity rate.

Inquiries related to this communication should be directed to the undersigned at (571) 272-4584.

JoAnne Burke
Petitions Examiner
Office of Petitions

UNITED STATES PATENT AND TRADEMARK OFFICE

Commissioner for Patents
United States Patent and Trademark Office
P.O. Box 1450
Alexandria, VA 22313-1450
www.uspto.gov

STEPHEN B. SALAI, ESQ.
HARTER SECREST & EMERY LLP
1600 BAUSCH & LOMB PLACE
ROCHESTER NY 14604-2711

MAILED
JUL 05 2011
OFFICE OF PETITIONS

| | | |
|---|---|---|
| In re Application of | : | |
| Icke, et al. | : | |
| Application No. 10/432,186 | : | DECISION |
| Filed/Deposited: 20 May, 2003 | : | |
| Attorney Docket No. 097584.000002 | : | |

This is a decision on the petition filed on 19 May, 2011, for revival of an application abandoned due to unintentional delay under 37 C.F.R. §1.137(b).

The petition pursuant to 37 C.F.R. §1.137(b) is **DISMISSED**.

Any request for reconsideration of this decision or any petition in the alternative is to be filed **within two (2) months** from the mail date of this decision. *Note* 37 C.F.R. §1.181(f). The request for reconsideration should include a cover letter and be entitled as a "Renewed Petition under 37 C.F.R. §1.181 to Withdraw the Holding of Abandonment," and/or "Renewed Petition under 37 C.F.R. §1.137(b)."

This is **not** a final agency action within the meaning of 5 U.S.C. §704.

As to the Allegations
of Unintentional Delay

The requirements of a grantable petition pursuant to 37 C.F.R. §1.137(b) are the petition and fee therefor, a reply, a proper statement of unintentional delay under the regulation, and, where applicable, a terminal disclaimer and fee.

*Petitioner does not appear to have addressed properly the requirements under the rule. Any deficiencies must be overcome.*

## BACKGROUND

The record reflects as follows:

Petitioner failed to reply timely and properly to the non-final Office action mailed on 14 March, 2007, with reply due absent extension of time on or before 14 June, 2007.

The application went abandoned by operation of law after midnight 14 June, 2007.

The Office mailed a Notice of Abandonment on 25 September, 2007.

On 19 May, 2011, Petitioner filed, *inter alia*, a petition (with fee) pursuant to 37 C.F.R. §1.137(b) with an averment of unintentional delay, but no reply—there was an averment of a continuation application though no showing thereof (e.g., there is no copy of the electronic acknowledgment receipt for such a filing), and no explanation whatsoever of the nearly four years of abandonment. Such not consistent with proper and diligent practice before the Office.

The availability of applications and application papers online to applicants/practitioners who diligently associate their Customer Number with the respective application(s) now provides an applicant/practitioner on-demand information as to events/transactions in an application.

Out of an abundance of caution, Petitioners always are reminded that those registered to practice and all others who make representations before the Office **must** inquire into the underlying facts of representations made to the Office and support averments with the appropriate documentation–since all owe to the Office the continuing duty to disclose.[1]

## STATUTES, REGULATIONS

Congress has authorized the Commissioner to "revive an application if the delay is shown to the satisfaction of the Commissioner to have been "unavoidable." 35 U.S.C. §133 (1994). And the regulations at 37 C.F.R. §1.137(a) and (b) set forth the requirements for a Petitioner to revive a previously unavoidably or unintentionally, respectively, abandoned application.[2],[3]

---

[1] See supplement of 17 June, 1999. The Patent and Trademark Office is relying on petitioner's duty of candor and good faith and accepting a statement made by Petitioner. See Changes to Patent Practice and Procedure, 62 Fed. Reg. at 53160 and 53178, 1203 Off. Gaz. Pat. Office at 88 and 103 (responses to comments 64 and 109)(applicant obligated under 37 C.F.R. §11.18, formerly §10.18, to inquire into the underlying facts and circumstances when providing statements to the Patent and Trademark Office).

[2] See: Changes to Patent Practice and Procedure; Final Rule Notice, 62 Fed. Reg. at 53158-59 (October 10, 1997), 1203 Off. Gaz. Pat. Office at 86-87 (October 21, 1997).

[3] The language of 35 U.S.C. §133 and 37 C.F.R. §1.137(a) is clear, unambiguous, and without qualification: the delay in tendering the reply to the outstanding Office action, as well as filing the first petition seeking revival, must have been unavoidable for the reply now to be accepted on petition. (Therefore, by example, an unavoidable delay in the payment of the Filing Fee might occur if a reply is shipped by the US Postal Service, but due to catastrophic accident, the delivery is not made.) Delays in responding properly raise the question whether delays are

Moreover, the Office has set forth in the Commentary at MPEP §711.03(c )(I) the showing and timeliness requirements for a proper showing for relief under 37 C.F.R. §1.181 in these matters.

Decisions on reviving abandoned applications on the basis of "unavoidable" delay have adopted the reasonably prudent person standard in determining if the delay was unavoidable:

> The word 'unavoidable' . . . is applicable to ordinary human affairs, and requires no more or greater care or diligence than is generally used and observed by prudent and careful men in relation to their most important business. It permits them in the exercise of this care to rely upon the ordinary and trustworthy agencies of mail and telegraph, worthy and reliable employees, and such other means and instrumentalities as are usually employed in such important business. If unexpectedly, or through the unforeseen fault or imperfection of these agencies and instrumentalities, there occurs a failure, it may properly be said to be unavoidable, all other conditions of promptness in its rectification being present.[4]

As to Allegations of
Unintentional Delay

As indicated above, the requirements of a grantable petition pursuant to 37 C.F.R. §1.137(b) are the petition and fee therefor, a proper reply, a proper statement and/or showing of unintentional delay under the regulation, and, where applicable, a terminal disclaimer and fee.

As discussed above, it does not appear that Petitioner has satisfied the requirements under the rule.

*Petitioners' attentions always are directed to the guidance in the Commentary at MPEP §711.03(c )(II) as to a petition pursuant to 37 C.F.R. §1.137.*

## CONCLUSION

Accordingly, the petition pursuant to 37 C.F.R. §1.137(b) is **dismissed**.

---

unavoidable. Where there is a question whether the delay was unavoidable, Petitioners must meet the burden of establishing that the delay was unavoidable within the meaning of 35 U.S.C. §133 and 37 C.F.R. §1.137(a) And the Petitioner must be diligent in attending to the matter. Failure to do so does not constitute the care required under Pratt, and so cannot satisfy the test for diligence and due care. (By contrast, unintentional delays are those that do not satisfy the very strict statutory and regulatory requirements of unavoidable delay, and also, by definition, are not intentional.))

[4] In re Mattullath, 38 App. D.C. 497, 514-15 (1912)(quoting Ex parte Pratt, 1887 Dec. Comm'r Pat. 31, 32-33 (1887)); see also Winkler v. Ladd, 221 F. Supp. 550, 552, 138 USPQ 666, 167-68 (D.D.C. 1963), aff'd, 143 USPQ 172 (D.C. Cir. 1963); Ex parte Henrich, 1913 Dec. Comm'r Pat. 139, 141 (1913). In addition, decisions on revival are made on a "case-by-case basis, taking all the facts and circumstances into account." Smith v. Mossinghoff, 671 F.2d 533, 538, 213 USPQ 977, 982 (D.C. Cir. 1982). Finally, a petition cannot be granted where a petitioner has failed to meet his or her burden of establishing that the delay was "unavoidable." Haines v. Quigg, 673 F. Supp. 314, 316-17, 5 USPQ2d 1130, 1131-32 (N.D. Ind. 1987).

Further correspondence with respect to this matter should be addressed as follows:

By Mail: Mail Stop PETITION
Commissioner for Patents
P. O. Box 1450
Alexandria, VA 22313-1450

By hand: U. S. Patent and Trademark Office
Customer Service Window, Mail Stop Petitions
Randolph Building
401 Dulany Street
Alexandria, VA 22314

By facsimile: **(571) 273-8300**
Attn: Office of Petitions

Telephone inquiries regarding this decision may be directed to the undersigned at (571) 272-3214—it is noted, however, that all practice before the Office is in writing (see: 37 C.F.R. §1.2[5]) and the proper authority for action on any matter in this regard are the statutes (35 U.S.C.), regulations (37 C.F.R.) and the commentary on policy (MPEP). Therefore, no telephone discussion may be controlling or considered authority for Petitioner's action(s).

/John J. Gillon, Jr./
John J. Gillon, Jr.
Senior Attorney
Office of Petitions

[5] The regulations at 37 C.F.R. §1.2 provide:
**§1.2 Business to be transacted in writing.**
All business with the Patent and Trademark Office should be transacted in writing. The personal attendance of applicants or their attorneys or agents at the Patent and Trademark Office is unnecessary. The action of the Patent and Trademark Office will be based exclusively on the written record in the Office. No attention will be paid to any alleged oral promise, stipulation, or understanding in relation to which there is disagreement or doubt.

UNITED STATES PATENT AND TRADEMARK OFFICE

Commissioner for Patents
United States Patent and Trademark Office
P.O. Box 1450
Alexandria, VA 22313-1450
www.uspto.gov

STEPHEN B. SALAI, ESQ.
HARTER SECREST & EMERY LLP
1600 BAUSCH & LOMB PLACE
ROCHESTER NY 14604-2711

MAILED
JAN 18 2012
OFFICE OF PETITIONS

| | | |
|---|---|---|
| In re Application of | : | |
| Icke, et al. | : | |
| Application No. 10/432,186 | : | DECISION |
| Filed/Deposited: 20 May, 2003 | : | |
| Attorney Docket No. 097584.000002 | : | |

This is a decision on the petition filed on 6 September, 2011—it is noted that the transmittal evidences a FAX transmittal certificate setting forth a 5 September, 2011, date and the FAX data on the paper of "09/05/2011" and "13:24," respectively, as to date and time of transmittal, and the Office receipt data at the bottom of the pages evidence "RCVD AT 9/.5/2011 1:25:50 PM (Eastern Daylight Time)"—for revival of an application abandoned due to unintentional delay under 37 C.F.R. §1.137(b).

**NOTE:**

*As noted above, the record (including the petition filed on 6 September, 2011) does not necessitate a finding that the delay between midnight 14 June, 2007 (the date of abandonment), and 6 September, 2011 (the date of the filing of grantable petition), was not unintentional.*

*Rather, the Patent and Trademark Office is relying in this matter on the duty of candor and good faith of Petitioner/Counsel Stephen B. Salai (Reg. No. 26,990) when accepting Petitioner's representation that the delay in filing the response was unintentional.*[1]

The petition pursuant to 37 C.F.R. §1.137(b) is **GRANTED**.

[1] See Changes to Patent Practice and Procedure, 62 Fed. Reg. at 53160 and 53178, 1203 Off. Gaz. Pat. Office at 88 and 103 (responses to comments 64 and 109)(applicant obligated under 37 C.F.R. ' 10.18 to inquire into the underlying facts and circumstances when providing the statement required by 37 C.F.R. ' 1.137(b) to the Patent and Trademark Office).

Application No. 10/432,186

As to the Allegations
of Unintentional Delay

The requirements of a grantable petition pursuant to 37 C.F.R. §1.137(b) are the petition and fee therefor, a reply, a proper statement of unintentional delay under the regulation, and, where applicable, a terminal disclaimer and fee.

## BACKGROUND

The record reflects as follows:

Petitioner failed to reply timely and properly to the non-final Office action mailed on 14 March, 2007, with reply due absent extension of time on or before 14 June, 2007.

The application went abandoned by operation of law after midnight 14 June, 2007.

The Office mailed a Notice of Abandonment on 25 September, 2007.

On 19 May, 2011, Petitioner filed, *inter alia*, a petition (with fee) pursuant to 37 C.F.R. §1.137(b) with an averment of unintentional delay, but no reply—there was an averment of a continuation application though no showing thereof (e.g., there is no copy of the electronic acknowledgment receipt for such a filing), and no explanation whatsoever of the nearly four years of abandonment, and the petition was dismissed on 5 July, 2011.

On 6 September, 2011, Petitioner re-advanced the petition—as noted earlier, the transmittal evidences a FAX transmittal certificate setting forth a 5 September, 2011, date and the FAX data on the paper of "09/05/2011" and "13:24," respectively, as to date and time, and the Office receipt data at the bottom of the pages evidence "RCVD AT 9/.5/2011 1:25:50 PM (Eastern Daylight Time)"—and set forth therein a history, inter alia, the transfer in bankruptcy proceedings of the interest in the instant application from earlier assignee Herfurth to assignee KBiosciences. In 2004 the United Kingdom firm of Carpmaels and Ransford (Carpmaels), which had represented Herfurth, but apparently received no instruction from KBiosciences and thus had no authority to act on behalf of the assignee—whose patent firm in fact was Sommerville & Rushton, which became Marks & Clerk and then Scott & York Intellectual Property Law. Further, Petitioner represented that KBiosciences instructed Scott & York to proceed in the instant matter and reported no contact of KBiosciences with Carpmaels. Thus, Carpmaels had no authority to act or instruct in the matter at the time of the March 2007 Office action or at the time the application went abandoned in June 2007, and instructions from Carpmaels to Petitioner to act or not are not considered following and in light of the KBiosciences acquisition in 2004. Petitioner pointed to the previously filed petition, fee and continuing application (Application No. 13/111,649 (the '649 application)—the record of which does not evidence the successive assignment(s), though they have been recorded in the instant application.)

As noted above, the record (including the petitions filed on 19 May and 6 September, 2011) does not necessitate a finding that the delay between midnight 14 June, 2007 (the date of abandonment), and 6 September, 2011 (the date of the filing of grantable petition), was not unintentional.

Rather, the Patent and Trademark Office is relying in this matter on the duty of candor and good faith of Petitioner/Counsel Stephen B. Salai (Reg. No. 26,990) when accepting Petitioner's representation that the delay in filing the response was unintentional.[2]

*Petitioners' attentions always are directed to the guidance in the Commentary at MPEP §711.03(c ) as to the showing regarding unintentional delay and a petition pursuant to 37 C.F.R. §1.137(b).*

The availability of applications and application papers online to applicants/practitioners who diligently associate their Customer Number with the respective application(s) now provides an applicant/practitioner on-demand information as to events/transactions in an application.

Out of an abundance of caution, Petitioners always are reminded that those registered to practice and all others who make representations before the Office **must** inquire into the underlying facts of representations made to the Office and support averments with the appropriate documentation–since all owe to the Office the continuing duty to disclose.[3]

## STATUTES, REGULATIONS

Congress has authorized the Commissioner to "revive an application if the delay is shown to the satisfaction of the Commissioner to have been "unavoidable." 35 U.S.C. §133 (1994). And the regulations at 37 C.F.R. §1.137(a) and (b) set forth the requirements for a Petitioner to revive a previously unavoidably or unintentionally, respectively, abandoned application.[4],[5]

---

[2] See Changes to Patent Practice and Procedure, 62 Fed. Reg. at 53160 and 53178, 1203 Off. Gaz. Pat. Office at 88 and 103 (responses to comments 64 and 109)(applicant obligated under 37 C.F.R. ' 10.18 to inquire into the underlying facts and circumstances when providing the statement required by 37 C.F.R. ' 1.137(b) to the Patent and Trademark Office).

[3] See supplement of 17 June, 1999. The Patent and Trademark Office is relying on petitioner's duty of candor and good faith and accepting a statement made by Petitioner. See Changes to Patent Practice and Procedure, 62 Fed. Reg. at 53160 and 53178, 1203 Off. Gaz. Pat. Office at 88 and 103 (responses to comments 64 and 109)(applicant obligated under 37 C.F.R. §11.18, formerly §10.18, to inquire into the underlying facts and circumstances when providing statements to the Patent and Trademark Office).

[4] See: Changes to Patent Practice and Procedure; Final Rule Notice, 62 Fed. Reg. at 53158-59 (October 10, 1997), 1203 Off. Gaz. Pat. Office at 86-87 (October 21, 1997).

[5] The language of 35 U.S.C. §133 and 37 C.F.R. §1.137(a) is clear, unambiguous, and without qualification: the delay in tendering the reply to the outstanding Office action, as well as filing the first petition seeking revival, must have been unavoidable for the reply now to be accepted on petition. (Therefore, by example, an unavoidable delay in the payment of the Filing Fee might occur if a reply is shipped by the US Postal Service, but due to catastrophic accident, the delivery is not made.) Delays in responding properly raise the question whether delays are unavoidable. Where there is a question whether the delay was unavoidable, Petitioners must meet the burden of establishing that the delay was

Moreover, the Office has set forth in the Commentary at MPEP §711.03(c )(I) the showing and timeliness requirements for a proper showing for relief under 37 C.F.R. §1.181 in these matters.

Decisions on reviving abandoned applications on the basis of "unavoidable" delay have adopted the reasonably prudent person standard in determining if the delay was unavoidable:

> The word 'unavoidable' . . . is applicable to ordinary human affairs, and requires no more or greater care or diligence than is generally used and observed by prudent and careful men in relation to their most important business. It permits them in the exercise of this care to rely upon the ordinary and trustworthy agencies of mail and telegraph, worthy and reliable employees, and such other means and instrumentalities as are usually employed in such important business. If unexpectedly, or through the unforeseen fault or imperfection of these agencies and instrumentalities, there occurs a failure, it may properly be said to be unavoidable, all other conditions of promptness in its rectification being present.[6]

As to Allegations of
Unintentional Delay

The requirements of a grantable petition pursuant to 37 C.F.R. §1.137(b) are the petition and fee therefor, a reply, a proper statement of unintentional delay under the regulation, and, where applicable, a terminal disclaimer and fee.

It appears that the requirements under the rule have been satisfied.

## CONCLUSION

Accordingly, the petition pursuant to 37 C.F.R. §1.137(b) is **granted** (for the purposes of continuity).

The instant application is released to the Technology Center/AU 1743 for further processing exclusively for continuity in due course.

---

unavoidable within the meaning of 35 U.S.C. §133 and 37 C.F.R. §1.137(a) And the Petitioner must be diligent in attending to the matter. Failure to do so does not constitute the care required under Pratt, and so cannot satisfy the test for diligence and due care. (By contrast, unintentional delays are those that do not satisfy the very strict statutory and regulatory requirements of unavoidable delay, and also, by definition, are not intentional.))

[6] In re Mattullath, 38 App. D.C. 497, 514-15 (1912)(quoting Ex parte Pratt, 1887 Dec. Comm'r Pat. 31, 32-33 (1887)); see also Winkler v. Ladd, 221 F. Supp. 550, 552, 138 USPQ 666, 167-68 (D.D.C. 1963), aff'd, 143 USPQ 172 (D.C. Cir. 1963); Ex parte Henrich, 1913 Dec. Comm'r Pat. 139, 141 (1913). In addition, decisions on revival are made on a "case-by-case basis, taking all the facts and circumstances into account." Smith v. Mossinghoff, 671 F.2d 533, 538, 213 USPQ 977, 982 (D.C. Cir. 1982). Finally, a petition cannot be granted where a petitioner has failed to meet his or her burden of establishing that the delay was "unavoidable." Haines v. Quigg, 673 F. Supp. 314, 316-17, 5 USPQ2d 1130, 1131-32 (N.D. Ind. 1987).

Petitioner may find it beneficial to view Private PAIR within a fortnight of the instant decision to ensure that the revival has been acknowledged by the TC/AU in response to this decision. It is noted that all inquiries with regard to status need be directed to the TC/AU where that change of status must be effected—that does not occur in the Office of Petitions.

Telephone inquiries regarding this decision may be directed to the undersigned at (571) 272-3214—it is noted, however , that all practice before the Office is in writing (see: 37 C.F.R. §1.2[7]) and the proper authority for action on any matter in this regard are the statutes (35 U.S.C.), regulations (37 C.F.R.) and the commentary on policy (MPEP). Therefore, no telephone discussion may be controlling or considered authority for Petitioner's action(s).

/John J. Gillon, Jr./
John J. Gillon, Jr.
Senior Attorney
Office of Petitions

[7] The regulations at 37 C.F.R. §1.2 provide:
**§1.2 Business to be transacted in writing.**
All business with the Patent and Trademark Office should be transacted in writing. The personal attdance of applicants or their attorneys or agents at the Patent and Trademark Office is unnecessary. The action of the Patent and Trademark Office will be based exclusively on the written record in the Office. No attention will be paid to any alleged oral promise, stipulation, or understanding in relation to which there is disagreement or doubt.

UNITED STATES PATENT AND TRADEMARK OFFICE

Commissioner for Patents
United States Patent and Trademark Office
P.O. Box 1450
Alexandria, VA 22313-1450
www.uspto.gov

COHEN, PONTANI, LIEBERMAN & PAVANE LLP
551 FIFTH AVENUE
SUITE 1210
NEW YORK NY 10176

MAILED

JUN 27 2011

OFFICE OF PETITIONS

| | | |
|---|---|---|
| In re Patent No. 6,956,881 | : | |
| Issue Date: October 18, 2005 | : | |
| Application No. 10/432,187 | : | ON PETITION |
| Filed: September 25, 2003 | : | |
| Attorney Docket No. 5367-23PUS | : | |

This is a decision on the petition, filed May 11, 2011, which is being treated as a request under 37 CFR 3.81(b)[1] to correct the name of the assignee on the front page of the above-identified patent by way of a Certificate of Correction.

The request is **GRANTED**.

Telephone inquiries concerning this decision may be directed to the undersigned at (571) 272-3230. Inquiries regarding the issuance of a certificate of correction should be directed to the Certificate of Correction Branch at (571) 272-4200.

The Certificates of Correction Branch will be notified of this decision granting the petition under 37 CFR 3.81(b) and directing issuance of the requested Certificate of Correction.

Shirene Willis Brantley

Shirene Willis Brantley
Senior Petitions Attorney
Office of Petitions

[1] *See* MPEP 1309, subsection II; and Official Gazette of June 22, 2004.

UNITED STATES PATENT AND TRADEMARK OFFICE

Commissioner for Patents
United States Patent and Trademark Office
P.O. Box 1450
Alexandria, VA 22313-1450
www.uspto.gov

**STAAS & HALSEY LLP**
**SUITE 700**
**1201 NEW YORK AVENUE, N.W.**
**WASHINGTON DC 20005**

**MAILED**

**AUG 26 2011**

**OFFICE OF PETITIONS**

| | | |
|---|---|---|
| In re Patent No. 6,940,210 | : | |
| Issue Date: September 6, 2005 | : | |
| Application No. 10/432,193 | : | NOTICE |
| Filed: May 20, 2003 | : | |
| Attorney Docket No. 1690.1003 | : | |

This is a notice regarding your request for acceptance of a fee deficiency submission under 37 CFR 1.28. On September 1, 1998, the Court of Appeals for the Federal Circuit held that 37 CFR 1.28(c) is the sole provision governing the time for correction of the erroneous payment of the issue fee as a small entity. **See DH Technology v. Synergystex International, Inc. 154 F.3d 1333, 47 USPQ2d 1865 (Fed. Cir. Sept. 1, 1998).**

The Office no longer investigates or rejects original or reissue applications under 37 CFR 1.56. **1098 Off. Gaz. Pat. Office 502 (January 3, 1989)**. Therefore, nothing in this Notice is intended to imply that an investigation was done.

Your fee deficiency submission under 37 CFR 1.28 is hereby **ACCEPTED**.

This application is no longer entitled to small entity status. Accordingly, all future fees paid in this application must be paid at the large entity rate.

Inquiries related to this communication should be directed to Diane Goodwyn at (571) 272-6735.

Thurman K. Page
Petitions Examiner
Office of Petitions

UNITED STATES PATENT AND TRADEMARK OFFICE

Commissioner for Patents
United States Patent and Trademark Office
P.O. Box 1450
Alexandria, VA 22313-1450
www.uspto.gov

SYNGENTA CROP
PROTECTION LLC
PATENT AND TRADEMARK
DEPARTMENT
410 SWING ROAD
GREENSBORO NC 27409

MAILED
MAR 26 2012
OFFICE OF PETITIONS

In re Application of

Douglass, et al. :

Application No. 10/432,458

: DECISION ON PETITION

Filed: November 10, 2003

:

Attorney Docket No. **PE/5-50039A**

This is a decision on the petition under 37 CFR 1.137(b), filed March 1, 2012, to revive the above-identified application.

The petition is **GRANTED**.

The above-cited application became abandoned for failure to reply in a timely manner to the non-final Office action mailed, July 20, 2011, which set a shortened statutory period for reply of three (3) months from its mailing date. No extension of time pursuant to 37 CFR 1.136(a) was obtained within the allowable period. Accordingly, the application became abandoned on October 20, 2010. A Notice of Abandonment was mailed March 25, 2011.

The amendment filed March 1, 2012, is noted.

The application is being forwarded to Technology Center GAU 1616 for further processing.

Telephone inquiries concerning this decision should be directed to the undersigned at (571) 272-3222.

/Kenya A. McLaughlin/

Kenya A. McLaughlin
Petitions Attorney
Office of Petitions

UNITED STATES PATENT AND TRADEMARK OFFICE

Commissioner for Patents
United States Patent and Trademark Office
P.O. Box 1450
Alexandria, VA 22313-1450
www.uspto.gov
DIW Jan-11

Paper No.

CANTOR COLBURN LLP
20 Church Street
22nd Floor
Hartford CT 06103

MAILED

FEB 02 2011

OFFICE OF PETITIONS

| | | |
|---|---|---|
| In re Patent No. 6860679 | : | |
| Issue Date: 03/01/2005 | : | |
| Application Number: 10/432555 | : | ON PETITION |
| Filing Date: 05/22/2003 | : | |
| Attorney Docket Number: | : | |
| ETF0389US | : | |

This is a decision in reference to the paper styled as a petition under 37 CFR 1.378(c), filed November 15, 2010, to accept the unintentionally delayed payment of a maintenance fee for the above-identified patent.

The petition is **GRANTED**.

This patent expired on March 1, 2009, for failure to timely pay the first maintenance fee. Since this petition was submitted within twenty-four months after the six-month grace period provided in 37 CFR 1.362(e), the petition was timely filed under the provisions of 37 CFR 1.378(c).

The maintenance fee is hereby accepted and the above-identified patent is reinstated as of the mail date of this decision.

It is noted that $810.00 was submitted with the petition. A surcharge of $1,640.00 plus the maintenance fee of $490.00 (small entity), however, is required to revive the patent. The balance due will be charged to counsel's deposit account as authorized in the Electronic Acknowledgement Receipt.

The address listed on the petition is different than the correspondence address of record. A courtesy copy of this decision is being mailed to the address noted on the petition. However, until otherwise instructed, all future correspondence regarding this patent will be mailed solely to the address of record. If petitioner desires to receive future correspondence

regarding any Maintenance Fee Reminder which **may** be mailed concerning this patent, a Fee Address should be submitted to Maintenance Fee Division.

Further correspondence with respect to this matter should be addressed as follows:

By mail: Mail Stop PETITIONS
Commissioner for Patents
Post Office Box 1450
Alexandria, VA 22313-1450

By hand: Customer Service Window
Mail Stop Petitions
Randolph Building
401 Dulany Street
Alexandria, VA 22314

By fax: (571) 273-8300
ATTN: Office of Petitions

Telephone inquiries related to this decision should be directed to the undersigned at (571) 272-3231.

D Wood

Douglas I. Wood
Senior Petitions Attorney
Office of Petitions

Cc: PATRICE STENGEL
63, chemin de la Maure
F-06800 Cagnes-sur-Mar
FRANCE

UNITED STATES PATENT AND TRADEMARK OFFICE

Commissioner for Patents
United States Patent and Trademark Office
P.O. Box 1450
Alexandria, VA 22313-1450
www.uspto.gov

MAILED

FEB 03 2011

PCT LEGAL ADMINISTRATION

Fulbright & Jaworski L.L.P.
600 Congress Ave.
Suite 2400
Austin TX 78701

In re Application of: BOURGUIGNON et al.
Application No.: 10/432,692
PCT No.: PCT/FR2001/003615
Int. Filing Date: 26 November 2001
Priority Date: 27 November 2000
Attorney Docket No.: SLOW:003US/10306977
For: DERIVATIVES OF 4-HYDROXYBUTANOIC ACID AND OF ITS HIGHER HOMOLOGUE AS LIGANDS OF SG(G)-HYDROXYBUTYRATE (GHB) RECEPTORS, PHARMACEUTICAL COMPOSITIONS CONTAINING SAME AND PHARMACEUTICAL USES

DECISION

The above-captioned application is before the Office of PCT Legal Administration for consideration of issues arising under 35 U.S.C. 371.

## BACKGROUND

On 26 November 2001, applicants filed international application no. PCT/FR2001/003615 which claimed a priority date of 27 November 2000. On 30 May 2002, a copy of the international was transmitted to the United States Patent and Trademark Office by the International Bureau. As a result, the deadline for submission of a copy of the international application (unless previously communicated by the International Bureau) and payment of the basic national fee was to expire 30 months from the priority date, i.e., 27 May 2003.

On 27 May 2003, applicants filed a transmittal letter for entry into the national stage in the United States which indicates that it was accompanied by, among other items: the basic national fee; a preliminary amendment; and a copy of the international search report.

On 20 October 2003, the United Stated Designated/Elected Office mailed a Notification of Missing Requirements under 35 U.S.C. 371 (Form PCT/DO/EO/905) indicating that an oath or declaration in compliance with 37 CFR 1.497(a) and (b) must be filed. Additionally, the notification indicated that a translation of the international

application must be filed. The notification set a two-month time limit in which to respond.

On 24 November 2003, applicant submitted an executed declaration of the inventors and a translation of the international application.

On 20 July 2004, the United States Designated/Elected Office (DO/EO/US) mailed a Notification of Acceptance of Application under 35 U.S.C. 371 (Form PCT/DO/EO/903) which indicated a date under 35 U.S.C. 371 of 24 November 2003.

On 27 October 2009, the United Stated Designated/Elected Office mailed a Notification of Missing Requirements under 35 U.S.C. 371 (Form PCT/DO/EO/905) indicating that a translation of international was (still) required. Specifically, the notification indicated that the current English translation of the international application was defective.

On 10 November 2009 and 26 February 2010, applicant submitted a corrected English translation of the international application.

On 04 March 2010, the United States Designated/Elected Office (DO/EO/US) mailed a Notification of Acceptance of Application under 35 U.S.C. 371 (Form PCT/DO/EO/903) which indicated a date under 35 U.S.C. 371 of 26 February 2010. A filing receipt was also issued.[1]

## DISCUSSION

35 U.S.C. 371(c)(2) requires applicants to submit an English translation of an international application originally filed in a language other than English. MPEP § 1893.01(d) states that "the translation must be **a translation of the international application as filed** with any changes which have been properly accepted under PCT Rule 26 or any rectifications which have been properly accepted under PCT Rule 91" (emphasis added). In this case, the translation of the international application filed on 26 February 2010 included untranslated text in the specification, which is improper. (See pages 7, 27-33, 36 and 38 etc.) Further, the first sentence of the translation has been amended to include the following information, "This application is a national phase application under 35 U.S.C. 371 of PCT application no. PCT/FR01/03615. . ," which is also improper. As stated in the MPEP § 1893.01(d), "[a]mendments, even those considered to be minor or to not include new matter, may not be incorporated into the translation. If an amendment to the international application as filed is desired for the national stage, it may be submitted in accordance with 37 CFR 1.121." Therefore, the "Notification Of Acceptance" (Form PCT/DO/EO/903) mailed 04 March 2010, which incorrectly indicated that the English translation was filed, is hereby vacated.

[1]A corrected Official Filing Receipt was issued on 12 March 2010 and 15 December 2010.

## CONCLUSION

The Notification of Acceptance of Application Under 35 U.S.C. 371 and 37 CFR 1.494 or 1.495 (Form PCT/DO/EO/903) mailed 20 July 2004 and 04 March 2010 and any subsequent Official Filing Receipt are hereby VACATED.

Applicants are required to submit a proper English translation of the international application within **TWO (2) MONTHS** from the mail date of this Decision. **Failure to respond will result in the abandonment of the application**. Extension of this time limit will be granted under 37 CFR 1.136(a).

Any further correspondence with respect to this matter may be filed electronically via EFS-Web selecting the document description "Petition for review and processing by the PCT Legal Office" or by mail addressed to Mail Stop PCT, Commissioner for Patents, Office of PCT Legal Administration, P.O. Box 1450, Alexandria, Virginia 22313-1450, with the contents of the letter marked to the attention of the Office of PCT Legal Administration.

Anthony Smith
Attorney-Advisor
Office of PCT Legal Administration
Tel: (571) 272-3298
Fax: (571) 273-0459

UNITED STATES PATENT AND TRADEMARK OFFICE

COMMISSIONER FOR PATENTS
UNITED STATES PATENT AND TRADEMARK OFFICE
P.O. BOX 1450
ALEXANDRIA, VA 22313-1450
www.uspto.gov

FINNEGAN, HENDERSON, FARABOW,
GARRETT & DUNNER LLP
901 NEW YORK AVENUE, NW
WASHINGTON DC 20001-4413

MAILED

JUL 19 2011

OFFICE OF PETITIONS

| | | |
|---|---|---|
| In re Patent No. 7,465,880 | : | |
| BELLI et al. | : | DECISION ON REQUEST FOR |
| Issue Date: December 16, 2008 | : | RECONSIDERATION OF PATENT |
| Application No. 10/432,890 | : | TERM ADJUSTMENT |
| Filing Date: November 5, 2003 | : | UNDER 37 CFR 1.705(d) |
| Atty Docket No. 09875.0263-00000 | : | |

This is a decision on the petition filed February 9, 2009, which is being treated as a petition under 37 CFR 1.705(d) requesting that the patent term adjustment indicated on the above-identified patent be corrected to indicate that the term of the above-identified patent is extended or adjusted by five hundred fifty-two (552) days.

The petition to correct the patent term adjustment indicated on the above-identified patent is **GRANTED to the extent indicated herein**. The term of the above-identified patent is extended or adjusted by **four hundred twelve (412) days**.

In the present petition, patentee states: "In view of the decision of the Federal District Court for the District of Columbia in *Wyeth v. Dudas* on September 30, 2008, patentee submits it is entitled to a total patent term adjustment of 552 days which is the sum of 323 days of patent term adjustment due to exceeding three year pendency and 229 days due to U.S. PTO delay." *Petition, p. 1.*

A review of the record reveals the Office was incorrectly assessed a period of delay of 53 days. Pursuant to 37 CFR 1.702(a)(2), failure of the Office to respond to an appeal taken under 35 U.S.C. 134 not later than four months after the date on

which the reply was filed or the appeal was taken is a ground for adjustment of patent term due to examination delay under the Patent Term Guarantee Act of 1999. The phrase "the date on which" an "appeal was taken" in 35 U.S.C. 154(b)(1)(A)(ii) means the date on which an appeal brief (and not a notice of appeal) was filed. The phrase "appeal brief in compliance with 37 CFR 41.37" requires that: (i) the appeal brief fee (37 CFR 41.20(b)(2)) be paid (37 CFR 41.37(a)(2); and (2) the appeal brief complies with 37 CFR 41.37(c). Accordingly, 37 CFR 1.703(a)(4) pertains to the provisions of 35 U.S.C. 154(b)(1)(A)(ii) and specifies that the period of adjustment for Office delay includes the number of days, if any, in the period beginning on the day after the date that is four months after the date an appeal brief in compliance with § 41.37 was filed and ending on the date of mailing of any of an examiner's answer under § 41.39, an action under 35 U.S.C.132, or a notice of allowance under 35 U.S.C. 151, whichever occurs first.

In this instance, patentee filed an appeal brief on January 10, 2007. On March 8, 2007, a Notification of Non-Compliant Appeal Brief was mailed, stating that the brief was defective for failure to comply with one or more provisions of 37 CFR 41.37. On March 22, 2007, patentee filed a corrected appeal brief. On July 2, 2007, the Office mailed a nonfinal Office action within four (4) months of March 22, 2007, the date patentee filed an appeal brief in compliance with 37 CFR 41.37. Accordingly, there was no basis for entry of a period of adjustment for Office delay under 37 CFR 1.702(a)(2). The period of adjustment of 53 days is being removed. In view thereof, the period of A delay is 229 days.

A further review of the record reveals that the USPTO did not use the 35 U.S.C. 371(b) national stage commencement date of May 30, 2003, in calculating the period of adjustment under 37 CFR 1.703(b). As stated in 37 CFR 1.703(b), the period of adjustment under 37 CFR 1.702(b) ("over three year") is the number of days in the period beginning on the day after the date that is three years after the date on which the application was filed under 35 U.S.C. 111(a) or the national stage commenced 35 U.S.C. 371(b) in an international application and ending on the date a patent was issued. 37 CFR 1.703(b) also sets forth the limitations on patent term adjustment specified in 35 U.S.C. 154(b)(1)(B)(i) and (ii).

37 CFR 1.703(b)(1) provides that the period of adjustment of the term of a patent shall not include the period beginning on the date on which a request for continued examination of the application under 35 U.S.C. 132(b) was filed and ending on the date the patent was issued. As the period from the filing date of the request for continued examination (RCE) to the issue date of the patent is not included in the B delay period, the over three year period is seven hundred fifty (750) days, beginning on May 31, 2006, the day after the date that is three years after the date on which the national stage commenced 35 U.S.C. 371(b) and ending on June 18, 2008, the day before the filing of the RCE. See 35 U.S.C. 154(b)(1)(B)(i).

Additionally, the period consumed by appellate review, whether successful or not, is excluded from the calculation of B delay. See 35 U.S.C. 154(b)(1)(B)(ii), 37 CFR 1.703(b)(4). An appeal to the Board of Patent Appeals and Interferences commences with the filing of a notice of appeal. See 35 U.S.C. 134(a). Generally, an appeal to the Board of Patent Appeals and Interferences ends with either 1) a Board decision, 2) the examiner reopening prosecution and issuing another Office action, or 3) the applicant filing a request to withdraw the appeal and reopen prosecution (e.g. the filing of a request for continued examination). In this instance the period consumed by appellate review is two hundred ninety-eight (298) days, beginning on September 8, 2006, the date of filing of the notice of appeal and ending on July 2, 2007, the subsequent date of the mailing of the nonfinal Office action. Thus, B delay is 452 (750 - 298) days.

Accordingly, the patent term adjustment is 412 days (229 days of A delay + 452 days of B delay - 269 days of applicant delay).

The Office will *sua sponte* issue a certificate of correction. Pursuant to 37 CFR 1.322, the Office will not issue a certificate of correction without first providing assignee or patentee an opportunity to be heard. Accordingly, patentee is given **one (1) month or thirty (30) days**, whichever is longer, from the mail date of this decision to respond. No extensions of time will be granted under 37 CFR 1.136.

It is noted that the Office issued a Notice of proposed rulemaking entitled *Revision of Patent Term Extension and Adjustment Provisions Relating to Appellate Review and*

*Information Disclosure Statements*, 76 FR 18990 (April 6, 2011). To the extent that the final rule on *Revision of Patent Term Extension and Adjustment Provisions Relating to Appellate Review* revises the interpretation of appellate review applied in this decision, patentee is given **one (1) month or thirty (30) days**, whichever is longer, from the date of the final rule to file a request for reconsideration. No extensions of time will be granted under 37 CFR 1.136.

Nothing in this decision shall be construed as a waiver of the requirement of 35 U.S.C. 154(b)(4) that any civil action by an applicant dissatisfied with a determination made by the Director under 35 U.S.C. 154(b)(3) be filed in the United States District Court for the District of Columbia within 180 days after the grant of the patent.

The Office will charge the $200.00 fee set forth in 37 CFR 1.18(e) to the Deposit Account as authorized. No additional fees are required.

This matter is being referred to the Certificates of Correction Branch for issuance of a certificate of correction. The Office will issue a certificate of correction indicating that the term of the above-identified patent is extended or adjusted by **four hundred twelve (412) days**.

Telephone inquiries specific to this matter should be directed to the undersigned at (571) 272-3211.

Christina Tartera Donnell

Christina Tartera Donnell
Senior Petitions Attorney
Office of Petitions

Enclosure: Copy of DRAFT Certificate of Correction

**DRAFT COPY**

UNITED STATES PATENT AND TRADEMARK OFFICE

# CERTIFICATE OF CORRECTION

PATENT : 7,465,880 B2

DATED : Dec. 16, 2008

INVENTOR(S) : Belli et al.

It is certified that error appears in the above-identified patent and that said Letters Patent is hereby corrected as shown below:

On the cover page,

[*] Notice: Subject to any disclaimer, the term of this patent is extended or adjusted under 35 USC 154(b) by (323) days

Delete the phrase "by 323 days" and insert – by 412 days--

UNITED STATES PATENT AND TRADEMARK OFFICE

Commissioner for Patents
United States Patent and Trademark Office
P.O. Box 1450
Alexandria, VA 22313-1450
www.uspto.gov

WOODCOCK WASHBURN LLP
CIRA CENTRE, 12TH FLOOR
2929 ARCH STREET
PHILADELPHIA PA 19104-2891

**MAILED**
MAY 05 2011
**OFFICE OF PETITIONS**

| | |
|---|---|
| In re Patent No. 7,875,794 | : DECISION ON REQUEST |
| Weber et al. | : FOR |
| Issue Date: 01/25/2011 | : RECONSIDERATION OF |
| Application No. 10/432,936 | : PATENT TERM ADJUSTMENT |
| Filing or 371(c) Date: 12/22/2003 | : and |
| Atty Docket No. | : NOTICE OF INTENT TO ISSUE |
| OERL-0003 | : CERTIFICATE OF CORRECTION |

This is a decision on the petition filed on March 16, 2011, which is being treated as a petition under 37 CFR 1.705(d) requesting that the patent term adjustment indicated on the above-identified patent be corrected to indicate that the term of the above-identified patent is extended or adjusted by one thousand one hundred fifty-one (1151) days.

The petition to correct the patent term adjustment indicated on the above-identified patent to indicate that the term of the above-identified patent is extended or adjusted by one thousand one hundred fifty-one (1151) days is **GRANTED**.

The Office acknowledges submission of the $200.00 fee set forth in 37 CFR 1.18(e). No additional fees are required.

The Office thanks patentees for their good faith and candor in bringing this to the attention of the Office.

The application is being forwarded to the Certificates of Correction Branch for issuance of a certificate of correction. The Office will issue a certificate of correction indicating that the term of the above-identified patent is extended or adjusted by **one thousand one hundred fifty-one (1151)** days.

Telephone inquiries specific to this matter should be directed to the undersigned at (571) 272-3231.

D Wood
Douglas I. Wood
Senior Petitions Attorney
Office of Petitions

Enclosure: Copy of DRAFT Certificate of Correction

UNITED STATES PATENT AND TRADEMARK OFFICE

# CERTIFICATE OF CORRECTION

PATENT : 7,875,794 B2

DATED : **Jan. 25, 2011** **DRAFT**

INVENTOR(S) : Weber et al.

It is certified that error appears in the above-identified patent and that said Letters Patent is hereby corrected as shown below:

On the cover page,

[*] Notice: Subject to any disclaimer, the term of this patent is extended or adjusted under 35 USC 154(b) by 1099 days.

Delete the phrase "by 1099 days" and insert – by 1151 days--

PTO/SB/66 (03-09)
Approved for use through 03/31/2012. OMB 0651-0016
U.S. Patent and Trademark Office: U.S. DEPARTMENT OF COMMERCE
Under the Paperwork Reduction Act of 1995, no persons are required to respond to a collection of information unless it displays valid OMB control number.

# PETITION TO ACCEPT UNINTENTIONALLY DELAYED PAYMENT OF MAINTENANCE FEE IN AN EXPIRED PATENT (37 CFR 1.378(c))

| Patent Number | Issue Date (YYYY-MM-DD) | Application Number | Filing Date (YYYY-MM-DD) | Docket Number (if applicable) |
|---|---|---|---|---|
| 7194409 | 2007-03-20 | 10433021 | 2003-10-14 | 60115.0003USN1 |

CAUTION: Maintenance fee (and surcharge, if any) payment must correctly identify: (1) the patent number and (2) the application number of the actual U.S. application leading to issuance of that patent to ensure the fee(s) is/are associated with the correct patent. 37 CFR 1.366(c) and (d).

SMALL ENTITY
☒ Patentee claims, or has previously claimed, small entity status. See 37 CFR 1.27.

LOSS OF ENTITLEMENT TO SMALL ENTITY STATUS
☐ Patentee is no longer entitled to small entity status. See 37 CFR 1.27(g)

| NOT Small Entity | | Small Entity | |
|---|---|---|---|
| Fee | Code | Fee | Code |
| ○ 3 ½ year | (1551) | ● 3 ½ year | (2551) |
| ○ 7 ½ year | (1552) | ○ 7 ½ year | (2552) |
| ○ 11 ½ year | (1553) | ○ 11 ½ year | (2553) |

SURCHARGE
The surcharge required by 37 CFR 1.20(i)(2) (Fee Code 1558) must be paid as a condition of accepting unintentionally delayed payment of the maintenance fee.

MAINTENANCE FEE (37 CFR 1.20(e)-(g))
The appropriate maintenance fee must be submitted with this petition.

STATEMENT
THE UNDERSIGNED CERTIFIES THAT THE DELAY IN PAYMENT OF THE MAINTENANCE FEE TO THIS PATENT WAS UNINTENTIONAL

PETITIONER(S) REQUEST THAT THE DELAYED PAYMENT OF THE MAINTENANCE FEE BE ACCEPTED AND THE PATENT REINSTATED

THIS PORTION MUST BE COMPLETED BY THE SIGNATORY OR SIGNATORIES

37 CFR 1.378(d) states: "Any petition under this section must be signed by an attorney or agent registered to practice before the Patent and Trademark Office, or by the patentee, the assignee, or other party in interest."

I certify, in accordance with 37 CFR 1.4(d)(4) that I am

- ● An attorney or agent registered to practice before the Patent and Trademark Office
- ○ A sole patentee
- ○ A joint patentee; I certify that I am authorized to sign this submission on behalf of all the other patentees.
- ○ A joint patentee; all of whom are signing this e-petition
- ○ The assignee of record of the entire interest

Under the Paperwork Reduction Act of 1995, no persons are required to respond to a collection of information unless it displays valid OMB control number.

| Patent Practitioner | | | |
|---|---|---|---|
| A signature of the applicant or representative is required in accordance with 37 CFR 1.33 and 10.18. Please see 37 CFR 1.4(d) for the form of the signature | | | |
| Signature | /Karl H. Koster/ | Date (YYYY-MM-DD) | 2011-07-06 |
| Name | Karl H. Koster | Registration Number | 50684 |

This collection of information is required by 37 CFR 1.378(c). The information is required to obtain or retain a benefit by the public which is to file (and by the USPTO to process) an application. Confidentiality is governed by 35 U.S.C. 122 and 37 CFR 1.11 and 1.14. This collection is estimated to take 1 hour to complete, including gathering, preparing, and submitting the completed application form to the USPTO. Time will vary depending upon the individual case. Any comments on the amount of time you require to complete this form and/ or suggestions for reducing this burden, should be sent to the Chief Information Officer, U.S. Patent and Trademark Office, U.S. Department of Commerce, P.O. Box 1450, Alexandria, VA 22313-1450. DO NOT SEND FEES OR COMPLETED FORMS TO THIS ADDRESS. **This form can only be used when in conjunction with EFS-Web. If this form is mailed to the USPTO, it may cause delays in reinstating the patent.**

# Privacy Act Statement

The Privacy Act of 1974 (P.L. 93-579) requires that you be given certain information in connection with your submission of the attached form related to a patent application or patent. Accordingly, pursuant to the requirements of the Act, please be advised that: (1) the general authority for the collection of this information is 35 U.S.C. 2(b)(2); (2) furnishing of the information solicited is voluntary; and (3) the principal purpose for which the information is used by the U.S. Patent and Trademark Office is to process and/or examine your submission related to a patent application or patent. If you do not furnish the requested information, the U.S. Patent and Trademark Office may not be able to process and/or examine your submission, which may result in termination of proceedings or abandonment of the application or expiration of the patent.

The information provided by you in this form will be subject to the following routine uses:

1. The information on this form will be treated confidentially to the extent allowed under the Freedom of Information Act (5 U.S.C. 552) and the Privacy Act (5 U.S.C. 552a). Records from this system of records may be disclosed to the Department of Justice to determine whether the Freedom of Information Act requires disclosure of these records.

2. A record from this system of records may be disclosed, as a routine use, in the course of presenting evidence to a court, magistrate, or administrative tribunal, including disclosures to opposing counsel in the course of settlement negotiations.

3. A record in this system of records may be disclosed, as a routine use, to a Member of Congress submitting a request involving an individual, to whom the record pertains, when the individual has requested assistance from the Member with respect to the subject matter of the record.

4. A record in this system of records may be disclosed, as a routine use, to a contractor of the Agency having need for the information in order to perform a contract. Recipients of information shall be required to comply with the requirements of the Privacy Act of 1974, as amended, pursuant to 5 U.S.C. 552a(m).

5. A record related to an International Application filed under the Patent Cooperation Treaty in this system of records may be disclosed, as a routine use, to the International Bureau of the World Intellectual Property Organization, pursuant to the Patent Cooperation Treaty.

6. A record in this system of records may be disclosed, as a routine use, to another federal agency for purposes of National Security review (35 U.S.C. 181) and for review pursuant to the Atomic Energy Act (42 U.S.C. 218(c)).

7. A record from this system of records may be disclosed, as a routine use, to the Administrator, General Services, or his/her designee, during an inspection of records conducted by GSA as part of that agency's responsibility to recommend improvements in records management practices and programs, under authority of 44 U.S.C. 2904 and 2906. Such disclosure shall be made in accordance with the GSA regulations governing inspection of records for this purpose, and any other relevant (i.e., GSA or Commerce) directive. Such disclosure shall not be used to make determinations about individuals.

8. A record from this system of records may be disclosed, as a routine use, to the public after either publication of the application pursuant to 35 U.S.C. 122(b) or issuance of a patent pursuant to 35 U.S.C. 151. Further, a record may be disclosed, subject to the limitations of 37 CFR 1.14, as a routine use, to the public if the record was filed in an application which became abandoned or in which the proceedings were terminated and which application is referenced by either a published application, an application open to public inspections or an issued patent.

9. A record from this system of records may be disclosed, as a routine use, to a Federal, State, or local law enforcement agency, if the USPTO becomes aware of a violation or potential violation of law or regulation.

UNITED STATES PATENT AND TRADEMARK OFFICE

Commissioner for Patents
United States Patent and Trademark Office
P.O. Box 1450
Alexandria, VA 22313-1450
www.uspto.gov

In re Patent No. 7194409
Issue Date: March 20,2007
Application No. 10433021
Filed: October 14,2003
Attorney Docket No. EIG 2070002

:
:DECISION GRANTING PETITION
:UNDER 37 CFR 1.378(c)
:

This is a decision on the electronic petition, filed July 6,2011 ,under 37 CFR 1.378(c) to accept the unintentionally delayed payment of the 3.5 year maintenance fee for the above-identified patent.

The petition is **GRANTED**.

The maintenance fee is accepted, and the above-identified patent reinstated as of July 6,2011 .
This decision also constitutes notice that the fee has been accepted. An electronic copy of the petition and this decision has been created as an entry in the Image File Wrapper. Nevertheless, petitioner should print and retain an independent copy.

Telephone inquiries related to this electronic decision should be directed to the Electronic Business Center at 1-866-217-9197.

## SPE RESPONSE FOR CERTIFICATE OF CORRECTION

**Paper No.:** _____

**DATE** : 7/19/11

**TO SPE OF** : ART UNIT: 3694

**SUBJECT** : Request for Certificate of Correction for Appl. No.: 10/433,173 Patent No. 7,966,243

**CofC mailroom date** 7/19/11

Please respond to this request for a certificate of correction within 7 days.

**FOR IFW FILES:**

Please review the requested changes/corrections as shown in the **COCIN** document(s) in the IFW application image. No new matter should be introduced, nor should the scope or meaning of the claims be changed.

Please complete the response (see below) and forward the completed response to scanning using document code **COCX**.

**FOR PAPER FILES:**

Please review the requested changes/corrections as shown in the attached certificate of correction. Please complete this form (see below) and forward it with the file to:

**Certificates of Correction Branch (CofC)**
**Randolph Square – 9D10-A**
**Palm Location 7580**

*** Note: See Claims errors**

*Ernest C. White, LIE*

**Certificates of Correction Branch**

**703-756-1814** _____

**Thank You For Your Assistance**

**The request for issuing the above-identified correction(s) is hereby:**
Note your decision on the appropriate box.

- ☒ **Approved** — **All** changes apply.
- ☐ **Approved in Part** — Specify below which changes **do not** apply.
- ☐ **Denied** — State the reasons for denial below.

**Comments:** _____

_____

_____

_____

**SPE** 3667 **Art Unit**

## SPE RESPONSE FOR CERTIFICATE OF CORRECTION

DATE : 8/20/10 Paper No.: —

TO SPE OF : ART UNIT 2823

SUBJECT : Request for Certificate of Correction for Appl. No.: 10/433314 Patent No.: 7754585 B2

Please respond to this request for a certificate of correction within 7 days.

**FOR IFW FILES:**

Please review the requested changes/corrections as shown in the **COCIN** document(s) in the IFW application image. No new matter should be introduced, nor should the scope or meaning of the claims be changed.

Please complete the response (see below) and forward the completed response to scanning using document code **COCX**.

**FOR PAPER FILES:**

Please review the requested changes/corrections as shown in the attached certificate of correction. Please complete this form (see below) and forward it with the file to:

**Certificates of Correction Branch (CofC)**
**Randolph Square – 9D10-A**
**Palm Location 7580**

Virginia Tolbert
**Certificates of Correction Branch**
571-272-0460

**Thank You For Your Assistance**

**The request for issuing the above-identified correction(s) is hereby:**
Note your decision on the appropriate box.

- ☑ **Approved** — All changes apply.
- ☐ **Approved in Part** — Specify below which changes **do not** apply.
- ☐ **Denied** — State the reasons for denial below.

**Comments:** Changing of the residence of the inventors does not effect patentability issue. Approved.

Matthew S. Smith, SPE 2823

UNITED STATES PATENT AND TRADEMARK OFFICE

UNITED STATES DEPARTMENT OF COMMERCE
United States Patent and Trademark Office
Address: COMMISSIONER FOR PATENTS
P.O. Box 1450
Alexandria, Virginia 22313-1450
www.uspto.gov

| APPLICATION NO. | FILING DATE | FIRST NAMED INVENTOR | ATTORNEY DOCKET NO. | CONFIRMATION NO. |
|---|---|---|---|---|
| 10/433,482 | 06/12/2003 | William M. Anthony | X2YA0017UPCT-US | 5267 |

92864 7590 03/27/2012
Kenneth C. Spafford
708 Smithson Avenue
Erie, PA 16511

| EXAMINER |
|---|
| NGO, HUNG V |

| ART UNIT | PAPER NUMBER |
|---|---|
| 2831 | |

| NOTIFICATION DATE | DELIVERY MODE |
|---|---|
| 03/27/2012 | ELECTRONIC |

**Please find below and/or attached an Office communication concerning this application or proceeding.**

The time period for reply, if any, is set in the attached communication.

Notice of the Office communication was sent electronically on above-indicated "Notification Date" to the following e-mail address(es):

kspafford@spaffordlaw.com
spaffordlaw@gmail.com

UNITED STATES PATENT AND TRADEMARK OFFICE

Commissioner for Patents
United States Patent and Trademark Office
P.O. Box 1450
Alexandria, VA 22313-1450
www.uspto.gov

MAR 27 2012

| | |
|---|---|
| *In re* ANTHONY et al<br>Patent No. 7,374,549<br>Issue Date: September 25, 2007<br>Appl No.: 10/433,482<br>Filed: June 12, 2003<br>Attorney Docket Number X2YA0017UPCT-US | **DECISION GRANTING PETITION**<br>*37 CFR 1.324* |

This is a decision on the petition filed January 30, 2012 to correct inventorship under 37 CFR 1.324.

The petition is **granted**.

The patented file is being forwarded to Certificate of Corrections Branch for issuance of a certificate naming only the actual inventor or inventors.

Jinhee J. Lee
Supervisory Patent Examiner
Art Unit 2835
Technology Center 2800

UNITED STATES PATENT AND TRADEMARK OFFICE

Commissioner for Patents
United States Patent and Trademark Office
P.O. Box 1450
Alexandria, VA 22313-1450
www.uspto.gov

**MARTIN D. MOYNIHAN d/b/a PRTSI, INC.**
**P.O. BOX 16446**
**ARLINGTON, VA 22215**

MAILED

JAN 18 2011

OFFICE OF PETITIONS

| | | |
|---|---|---|
| In re Application of | : | |
| Rami Goldreich | : | |
| Application No. 10/433,623 | : | ON PETITION |
| Filed: June 18, 2003 | : | |
| Attorney Docket No. 26008 | : | |

This is a decision on the petition under the unintentional provisions of 37 CFR 1.137(b), filed December 15, 2010, to revive the above-identified application.

The petition is **GRANTED**.

The application became abandoned for failure to file a reply within the meaning of 37 CFR 1.113 to the final Office action of June 12, 2009. The proposed reply required for consideration of a petition to revive must be a Notice of Appeal (and appeal fee required by 37 CFR 41.20(b)(2), an amendment that prima facie places the application in condition for allowance, a Request for Continued Examination and submission (37 CFR 1.114), or the filing of a continuing application under 37 CFR 1.53(b). See MPEP 711.03(c)(II)(A)(2). No extensions of time pursuant to the provisions of 37 CFR 1.136(a) were obtained. Accordingly, the date of abandonment of this application is September 13, 2009. A Notice of Abandonment was mailed December 24, 2009.

The petition satisfies the requirements of 37 CFR 1.137(b) in that petitioner has supplied (1) the reply in the form of a Request for Continued Examination (RCE) including the fee of $405 and the submission required by 37 CFR 1.114, (2) the petition fee of $810 , and (3) a proper statement of unintentional delay.

It is not apparent whether the person signing the statement of unintentional delay was in a position to have firsthand or direct knowledge of the facts and circumstances of the delay at issue. There is no indication that the person signing the petition was ever given a power of attorney to prosecute the application. Nevertheless, such statement is being treated as having been made as the result of a reasonable inquiry into the facts and circumstances of such delay. See 37 CFR 10.18(b) and Changes to Patent Practice and Procedure; Final Rule Notice, 62 Fed. Reg. 53131, 53178 (October 10, 1997), 1203 Off. Gaz. Pat. Office 63, 103 (October 21, 1997). In the event that such an inquiry has not been made, petitioner must make such an inquiry. If such inquiry results in the discovery that it is not correct that the entire delay in filing the required reply from the due date for the reply until the filing of a grantable petition pursuant to 37 CFR 1.137(b) was unintentional, petitioner must notify the Office.

Telephone inquiries concerning this decision should be directed to the undersigned at (571) 272-6059.

This application is being referred to Technology Center AU 3726 for processing of the RCE and for appropriate action by the Examiner in the normal course of business in accordance with 37 CFR 1.114.

A. Kelley

Alicia Kelley
Petitions Examiner
Office of Petitions

UNITED STATES PATENT AND TRADEMARK OFFICE

Commissioner for Patents
United States Patent and Trademark Office
P.O. Box 1450
Alexandria, VA 22313-1450
www.uspto.gov

MAILED

DEC 05 2011

OFFICE OF PETITIONS

THE NATH LAW GROUP
112 South West Street
Alexandria VA 22314

In re Patent No. 7,396,859 :
Issued: July 8, 2008 :
Application No. 10/433,668 : NOTICE
Filed: October 31, 2003 :
Atty. Dkt. No.: 25478 :

This is a notice regarding your request for acceptance of a fee deficiency submission under 37 CFR 1.28.

The Office no longer investigates or rejects original or reissue applications under 37 CFR 1.56. **1098 Off. Gaz. Pat. Office 502 (January 3, 1989)**. Therefore, nothing in this Notice is intended to imply that an investigation was done.

Your fee deficiency submission under 37 CFR 1.28 is hereby **ACCEPTED**.

This application is no longer entitled to small entity status. Accordingly, all future fees paid in this application must be paid at the large entity rate.

The file does not indicate that a change of correspondence address has been submitted, although the address given on the petition differs from the correspondence address of record. If appropriate, a change of correspondence address should be filed in accordance with MPEP 601.03. A courtesy copy of this decision is being mailed to the address given on the petition; however, the Office will mail all future correspondence solely to the correspondence address of record.

Inquiries related to this communication should be directed to the undersigned at (571) 272-3205.

*/ALESIA M. BROWN/*

Alesia M. Brown
Attorney Advisor
Office of Petitions

CC: Zeev Pearl
Cohen Zedek Latzer
1500 Broadway, 12th Floor
New York, NY 10036

PTO/SB/66 (03-09)
Approved for use through 03/31/2012. OMB 0651-0016
U.S. Patent and Trademark Office: U.S. DEPARTMENT OF COMMERCE
Under the Paperwork Reduction Act of 1995, no persons are required to respond to a collection of information unless it displays valid OMB control number.

# PETITION TO ACCEPT UNINTENTIONALLY DELAYED PAYMENT OF MAINTENANCE FEE IN AN EXPIRED PATENT (37 CFR 1.378(c))

| Patent Number | Issue Date (YYYY-MM-DD) | Application Number | Filing Date (YYYY-MM-DD) | Docket Number (if applicable) |
|---|---|---|---|---|
| 7308103 | 2007-12-11 | 10/434,024 | 2003-05-08 | CRNT-0146-US |

CAUTION: Maintenance fee (and surcharge, if any) payment must correctly identify: (1) the patent number and (2) the application number of the actual U.S. application leading to issuance of that patent to ensure the fee(s) is/are associated with the correct patent. 37 CFR 1.366(c) and (d).

SMALL ENTITY
☒ Patentee claims, or has previously claimed, small entity status. See 37 CFR 1.27.

LOSS OF ENTITLEMENT TO SMALL ENTITY STATUS
☐ Patentee is no longer entitled to small entity status. See 37 CFR 1.27(g)

| NOT Small Entity | | Small Entity | |
|---|---|---|---|
| Fee | Code | Fee | Code |
| ○ 3 ½ year | (1551) | ● 3 ½ year | (2551) |
| ○ 7 ½ year | (1552) | ○ 7 ½ year | (2552) |
| ○ 11 ½ year | (1553) | ○ 11 ½ year | (2553) |

SURCHARGE
The surcharge required by 37 CFR 1.20(i)(2) (Fee Code 1558) must be paid as a condition of accepting unintentionally delayed payment of the maintenance fee.

MAINTENANCE FEE (37 CFR 1.20(e)-(g))
The appropriate maintenance fee must be submitted with this petition.

STATEMENT
THE UNDERSIGNED CERTIFIES THAT THE DELAY IN PAYMENT OF THE MAINTENANCE FEE TO THIS PATENT WAS UNINTENTIONAL

PETITIONER(S) REQUEST THAT THE DELAYED PAYMENT OF THE MAINTENANCE FEE BE ACCEPTED AND THE PATENT REINSTATED

THIS PORTION MUST BE COMPLETED BY THE SIGNATORY OR SIGNATORIES

37 CFR 1.378(d) states: "Any petition under this section must be signed by an attorney or agent registered to practice before the Patent and Trademark Office, or by the patentee, the assignee, or other party in interest."

I certify, in accordance with 37 CFR 1.4(d)(4) that I am

○ An attorney or agent registered to practice before the Patent and Trademark Office

○ A sole patentee

○ A joint patentee; I certify that I am authorized to sign this submission on behalf of all the other patentees.

○ A joint patentee; all of whom are signing this e-petition

● The assignee of record of the entire interest

Under the Paperwork Reduction Act of 1995, no persons are required to respond to a collection of information unless it displays valid OMB control number.

| The Assignee of record of the entire interest | | | |
|---|---|---|---|
| Under 37 CFR 3.71 an assignee becomes of record by filing a statement in compliance with 37 CFR 3.73(b).<br>Signature requirements are set forth in 37 CFR 1.4(d), and the undersigned certifies that he / she is empowered to act on behalf of the assignee of the entire interest | | | |
| Signature | /Andrew Rosenstein/ | Date (YYYY-MM-DD) | 2012-02-06 |
| Name | Andrew Rosenstein | | |
| Enter Reel and Frame Number | | Remove | |
| Reel Number | 014131 | Frame Number | 0371 |
| Enter Reel and Frame Number | | Remove | |
| Reel Number | 020518 | Frame Number | 0001 |
| Enter Reel and Frame Number | | Remove | |
| Reel Number | 021096 | Frame Number | 0131 |
| Click ADD for additional Reel Number and Frame Number | | Add | |

This collection of information is required by 37 CFR 1.378(c). The information is required to obtain or retain a benefit by the public which is to file (and by the USPTO to process) an application. Confidentiality is governed by 35 U.S.C. 122 and 37 CFR 1.11 and 1.14. This collection is estimated to take 1 hour to complete, including gathering, preparing, and submitting the completed application form to the USPTO. Time will vary depending upon the individual case. Any comments on the amount of time you require to complete this form and/ or suggestions for reducing this burden, should be sent to the Chief Information Officer, U.S. Patent and Trademark Office, U.S. Department of Commerce, P.O. Box 1450, Alexandria, VA 22313-1450. DO NOT SEND FEES OR COMPLETED FORMS TO THIS ADDRESS. **This form can only be used when in conjunction with EFS-Web. If this form is mailed to the USPTO, it may cause delays in reinstating the patent.**

# Privacy Act Statement

The Privacy Act of 1974 (P.L. 93-579) requires that you be given certain information in connection with your submission of the attached form related to a patent application or patent. Accordingly, pursuant to the requirements of the Act, please be advised that: (1) the general authority for the collection of this information is 35 U.S.C. 2(b)(2); (2) furnishing of the information solicited is voluntary; and (3) the principal purpose for which the information is used by the U.S. Patent and Trademark Office is to process and/or examine your submission related to a patent application or patent. If you do not furnish the requested information, the U.S. Patent and Trademark Office may not be able to process and/or examine your submission, which may result in termination of proceedings or abandonment of the application or expiration of the patent.

The information provided by you in this form will be subject to the following routine uses:

1. The information on this form will be treated confidentially to the extent allowed under the Freedom of Information Act (5 U.S.C. 552) and the Privacy Act (5 U.S.C. 552a). Records from this system of records may be disclosed to the Department of Justice to determine whether the Freedom of Information Act requires disclosure of these records.

2. A record from this system of records may be disclosed, as a routine use, in the course of presenting evidence to a court, magistrate, or administrative tribunal, including disclosures to opposing counsel in the course of settlement negotiations.

3. A record in this system of records may be disclosed, as a routine use, to a Member of Congress submitting a request involving an individual, to whom the record pertains, when the individual has requested assistance from the Member with respect to the subject matter of the record.

4. A record in this system of records may be disclosed, as a routine use, to a contractor of the Agency having need for the information in order to perform a contract. Recipients of information shall be required to comply with the requirements of the Privacy Act of 1974, as amended, pursuant to 5 U.S.C. 552a(m).

5. A record related to an International Application filed under the Patent Cooperation Treaty in this system of records may be disclosed, as a routine use, to the International Bureau of the World Intellectual Property Organization, pursuant to the Patent Cooperation Treaty.

6. A record in this system of records may be disclosed, as a routine use, to another federal agency for purposes of National Security review (35 U.S.C. 181) and for review pursuant to the Atomic Energy Act (42 U.S.C. 218(c)).

7. A record from this system of records may be disclosed, as a routine use, to the Administrator, General Services, or his/her designee, during an inspection of records conducted by GSA as part of that agency's responsibility to recommend improvements in records management practices and programs, under authority of 44 U.S.C. 2904 and 2906. Such disclosure shall be made in accordance with the GSA regulations governing inspection of records for this purpose, and any other relevant (i.e., GSA or Commerce) directive. Such disclosure shall not be used to make determinations about individuals.

8. A record from this system of records may be disclosed, as a routine use, to the public after either publication of the application pursuant to 35 U.S.C. 122(b) or issuance of a patent pursuant to 35 U.S.C. 151. Further, a record may be disclosed, subject to the limitations of 37 CFR 1.14, as a routine use, to the public if the record was filed in an application which became abandoned or in which the proceedings were terminated and which application is referenced by either a published application, an application open to public inspections or an issued patent.

9. A record from this system of records may be disclosed, as a routine use, to a Federal, State, or local law enforcement agency, if the USPTO becomes aware of a violation or potential violation of law or regulation.

UNITED STATES PATENT AND TRADEMARK OFFICE

Commissioner for Patents
United States Patent and Trademark Office
P.O. Box 1450
Alexandria, VA 22313-1450
www.uspto.gov

In re Patent No. 7308103
Issue Date: December 11,2007
Application No. 10434024
Filed: May 8,2003
Attorney Docket No. CRNT-0146-US

:
:DECISION GRANTING PETITION
:UNDER 37 CFR 1.378(c)
:

This is a decision on the electronic petition, filed February 6,2012 ,under 37 CFR 1.378(c) to accept the unintentionally delayed payment of the 3.5 year maintenance fee for the above-identified patent.

The petition is **GRANTED**.

The maintenance fee is accepted, and the above-identified patent reinstated as of February 6,2012 . This decision also constitutes notice that the fee has been accepted. An electronic copy of the petition and this decision has been created as an entry in the Image File Wrapper. Nevertheless, petitioner should print and retain an independent copy.

Telephone inquiries related to this electronic decision should be directed to the Electronic Business Center at 1-866-217-9197.

PTO/SB/66 (03-09)
Approved for use through 03/31/2012. OMB 0651-0016
U.S. Patent and Trademark Office: U.S. DEPARTMENT OF COMMERCE
Under the Paperwork Reduction Act of 1995, no persons are required to respond to a collection of information unless it displays valid OMB control number.

# PETITION TO ACCEPT UNINTENTIONALLY DELAYED PAYMENT OF MAINTENANCE FEE IN AN EXPIRED PATENT (37 CFR 1.378(c))

| Patent Number | Issue Date (YYYY-MM-DD) | Application Number | Filing Date (YYYY-MM-DD) | Docket Number (if applicable) |
|---|---|---|---|---|
| 7322029 | 2008-01-22 | 10434025 | 2003-05-08 | 60046.0037US01 |

CAUTION: Maintenance fee (and surcharge, if any) payment must correctly identify: (1) the patent number and (2) the application number of the actual U.S. application leading to issuance of that patent to ensure the fee(s) is/are associated with the correct patent. 37 CFR 1.366(c) and (d).

SMALL ENTITY
☐ Patentee claims, or has previously claimed, small entity status. See 37 CFR 1.27.

LOSS OF ENTITLEMENT TO SMALL ENTITY STATUS
☐ Patentee is no longer entitled to small entity status. See 37 CFR 1.27(g)

| NOT Small Entity | | Small Entity | |
|---|---|---|---|
| Fee | Code | Fee | Code |
| ◉ 3 ½ year | (1551) | ○ 3 ½ year | (2551) |
| ○ 7 ½ year | (1552) | ○ 7 ½ year | (2552) |
| ○ 11 ½ year | (1553) | ○ 11 ½ year | (2553) |

SURCHARGE
The surcharge required by 37 CFR 1.20(i)(2) (Fee Code 1558) must be paid as a condition of accepting unintentionally delayed payment of the maintenance fee.

MAINTENANCE FEE (37 CFR 1.20(e)-(g))
The appropriate maintenance fee must be submitted with this petition.

STATEMENT
THE UNDERSIGNED CERTIFIES THAT THE DELAY IN PAYMENT OF THE MAINTENANCE FEE TO THIS PATENT WAS UNINTENTIONAL

PETITIONER(S) REQUEST THAT THE DELAYED PAYMENT OF THE MAINTENANCE FEE BE ACCEPTED AND THE PATENT REINSTATED

THIS PORTION MUST BE COMPLETED BY THE SIGNATORY OR SIGNATORIES

37 CFR 1.378(d) states: "Any petition under this section must be signed by an attorney or agent registered to practice before the Patent and Trademark Office, or by the patentee, the assignee, or other party in interest."

I certify, in accordance with 37 CFR 1.4(d)(4) that I am

◉ An attorney or agent registered to practice before the Patent and Trademark Office

○ A sole patentee

○ A joint patentee; I certify that I am authorized to sign this submission on behalf of all the other patentees.

○ A joint patentee; all of whom are signing this e-petition

○ The assignee of record of the entire interest

Under the Paperwork Reduction Act of 1995, no persons are required to respond to a collection of information unless it displays valid OMB control number.

| Patent Practitioner | | | |
|---|---|---|---|
| A signature of the applicant or representative is required in accordance with 37 CFR 1.33 and 10.18. Please see 37 CFR 1.4(d) for the form of the signature | | | |
| Signature | /Leonard J. Hope/ | Date (YYYY-MM-DD) | 2012-02-28 |
| Name | Leonard J. Hope | Registration Number | 44774 |

This collection of information is required by 37 CFR 1.378(c). The information is required to obtain or retain a benefit by the public which is to file (and by the USPTO to process) an application. Confidentiality is governed by 35 U.S.C. 122 and 37 CFR 1.11 and 1.14. This collection is estimated to take 1 hour to complete, including gathering, preparing, and submitting the completed application form to the USPTO. Time will vary depending upon the individual case. Any comments on the amount of time you require to complete this form and/ or suggestions for reducing this burden, should be sent to the Chief Information Officer, U.S. Patent and Trademark Office, U.S. Department of Commerce, P.O. Box 1450, Alexandria, VA 22313-1450. DO NOT SEND FEES OR COMPLETED FORMS TO THIS ADDRESS. **This form can only be used when in conjunction with EFS-Web. If this form is mailed to the USPTO, it may cause delays in reinstating the patent.**

# Privacy Act Statement

The Privacy Act of 1974 (P.L. 93-579) requires that you be given certain information in connection with your submission of the attached form related to a patent application or patent. Accordingly, pursuant to the requirements of the Act, please be advised that: (1) the general authority for the collection of this information is 35 U.S.C. 2(b)(2); (2) furnishing of the information solicited is voluntary; and (3) the principal purpose for which the information is used by the U.S. Patent and Trademark Office is to process and/or examine your submission related to a patent application or patent. If you do not furnish the requested information, the U.S. Patent and Trademark Office may not be able to process and/or examine your submission, which may result in termination of proceedings or abandonment of the application or expiration of the patent.

The information provided by you in this form will be subject to the following routine uses:

1. The information on this form will be treated confidentially to the extent allowed under the Freedom of Information Act (5 U.S.C. 552) and the Privacy Act (5 U.S.C. 552a). Records from this system of records may be disclosed to the Department of Justice to determine whether the Freedom of Information Act requires disclosure of these records.

2. A record from this system of records may be disclosed, as a routine use, in the course of presenting evidence to a court, magistrate, or administrative tribunal, including disclosures to opposing counsel in the course of settlement negotiations.

3. A record in this system of records may be disclosed, as a routine use, to a Member of Congress submitting a request involving an individual, to whom the record pertains, when the individual has requested assistance from the Member with respect to the subject matter of the record.

4. A record in this system of records may be disclosed, as a routine use, to a contractor of the Agency having need for the information in order to perform a contract. Recipients of information shall be required to comply with the requirements of the Privacy Act of 1974, as amended, pursuant to 5 U.S.C. 552a(m).

5. A record related to an International Application filed under the Patent Cooperation Treaty in this system of records may be disclosed, as a routine use, to the International Bureau of the World Intellectual Property Organization, pursuant to the Patent Cooperation Treaty.

6. A record in this system of records may be disclosed, as a routine use, to another federal agency for purposes of National Security review (35 U.S.C. 181) and for review pursuant to the Atomic Energy Act (42 U.S.C. 218(c)).

7. A record from this system of records may be disclosed, as a routine use, to the Administrator, General Services, or his/her designee, during an inspection of records conducted by GSA as part of that agency's responsibility to recommend improvements in records management practices and programs, under authority of 44 U.S.C. 2904 and 2906. Such disclosure shall be made in accordance with the GSA regulations governing inspection of records for this purpose, and any other relevant (i.e., GSA or Commerce) directive. Such disclosure shall not be used to make determinations about individuals.

8. A record from this system of records may be disclosed, as a routine use, to the public after either publication of the application pursuant to 35 U.S.C. 122(b) or issuance of a patent pursuant to 35 U.S.C. 151. Further, a record may be disclosed, subject to the limitations of 37 CFR 1.14, as a routine use, to the public if the record was filed in an application which became abandoned or in which the proceedings were terminated and which application is referenced by either a published application, an application open to public inspections or an issued patent.

9. A record from this system of records may be disclosed, as a routine use, to a Federal, State, or local law enforcement agency, if the USPTO becomes aware of a violation or potential violation of law or regulation.

UNITED STATES PATENT AND TRADEMARK OFFICE

Commissioner for Patents
United States Patent and Trademark Office
P.O. Box 1450
Alexandria, VA 22313-1450
www.uspto.gov

In re Patent No. 7322029
Issue Date: January 22,2008
Application No. 10434025
Filed: May 8,2003
Attorney Docket No. 60046.0037US01

:
:DECISION GRANTING PETITION
:UNDER 37 CFR 1.378(c)
:

This is a decision on the electronic petition, filed February 28,2012 ,under 37 CFR 1.378(c) to accept the unintentionally delayed payment of the 3.5 year maintenance fee for the above-identified patent.

The petition is **GRANTED**.

The maintenance fee is accepted, and the above-identified patent reinstated as of February 28,2012 . This decision also constitutes notice that the fee has been accepted. An electronic copy of the petition and this decision has been created as an entry in the Image File Wrapper. Nevertheless, petitioner should print and retain an independent copy.

Telephone inquiries related to this electronic decision should be directed to the Electronic Business Center at 1-866-217-9197.

UNITED STATES PATENT AND TRADEMARK OFFICE

Commissioner for Patents
United States Patent and Trademark Office
P.O. Box 1450
Alexandria, VA 22313-1450
www.uspto.gov

**MAILED**

MAR 30 2011

**OFFICE OF PETITIONS**

MURRAY NADLER
2000 MORSE STREET
HOUSTON TX 77019

In re Patent No. 6,966,190 :
Issue Date: November 22, 2005 :
Application No. 10/434,244 : ON PETITION
Filed: May 8, 2003 :
Title of Invention: COMBINED CYCLE FOR :
GENERATING ELECTRIC POWER :

This is a decision on the renewed petition filed May 21, 2010 under 37 CFR 1.378(b), to accept the delayed payment of the maintenance fee for the above-identified patent.

The petition under 37 CFR 1.378(b) is **DISMISSED**.

If reconsideration of this decision is desired, a petition for reconsideration under 37 CFR 1.378(e) must be filed within TWO (2) MONTHS from the mail date of this decision. No extension of this 2-month time limit can be granted under 37 CFR 1.136(a) or (b). Any such petition for reconsideration must be accompanied by the petition fee of $400.00 as set forth in 37 CFR 1.17(h). The petition for reconsideration should include an exhaustive attempt to provide the lacking item(s) noted below, since, after a decision on the petition for reconsideration, no further reconsideration or review of the matter will be undertaken by the Commissioner.

The patent issued on November 22, 2005. The first maintenance fee due could have been paid during the period from November 22, 2008 to May 22, 2009 or, with a surcharge during the period from May 23, 2009 to November 22, 2009. Accordingly, this patent expired on November 22, 2009, for failure to timely remit the first maintenance fee.

A petition to accept the delayed maintenance fee under 35 U.S.C. § 41(c ) and 37 CFR 1.378(b) must be accompanied by (1) an adequate showing that the delay was unavoidable, since reasonable care was taken to ensure that the maintenance fee would be paid timely and that the petition was filed promptly after the patentee was notified of, or otherwise became aware of, the expiration of the patent, (2) payment of the appropriate maintenance fee, unless previously submitted, and (3) payment of the surcharge set forth in 37 CFR 1.20(I)(1).

Although petitioner has paid the maintenance fees, petitioner has not submitted payment

or authorization to charge a deposit account for the surcharge after expiration under the unavoidable standard ( 37 CFR 1.378(b). As such, the merits of this petition will not be discussed.

At this writing the fee under 37 CFR 1.378(b) is $700, however prior to paying the fees, petitioner should verify the correct fees and to ensure that fee increases haven't occurred in the interim.

This patent expired November 22, 2009 and will remain in that status until such time as a grantable petition and fees has been submitted.

Further correspondence with respect to this matter should be addressed as follows:

By mail: Mail Stop Petitions
Commissioner for Patents
P.O. Box 1450
Alexandria VA 22313-1450

By FAX: (571) 273-8300
ATTN: Office of Petitions

Telephone inquiries concerning this matter may be directed to the undersigned Petitions Attorney at (571) 272-3212.

Patricia Faison-Ball

Patricia Faison-Ball
Senior Petitions Attorney
Office of Petitions

UNITED STATES PATENT AND TRADEMARK OFFICE

UNITED STATES DEPARTMENT OF COMMERCE
United States Patent and Trademark Office
Address: COMMISSIONER FOR PATENTS
P.O. Box 1450
Alexandria, Virginia 22313-1450
www.uspto.gov

| APPLICATION NO. | FILING DATE | FIRST NAMED INVENTOR | ATTORNEY DOCKET NO. | CONFIRMATION NO. |
|---|---|---|---|---|
| 10/434,409 | 05/07/2003 | Robert G. Degen | 026595-006420US | 7041 |

20350 7590 06/01/2011
KILPATRICK TOWNSEND & STOCKTON LLP
TWO EMBARCADERO CENTER
EIGHTH FLOOR
SAN FRANCISCO, CA 94111-3834

| EXAMINER |
|---|
| SHERR, CRISTINA O |

| ART UNIT | PAPER NUMBER |
|---|---|
| 3685 | |

| NOTIFICATION DATE | DELIVERY MODE |
|---|---|
| 06/01/2011 | ELECTRONIC |

**Please find below and/or attached an Office communication concerning this application or proceeding.**

The time period for reply, if any, is set in the attached communication.

Notice of the Office communication was sent electronically on above-indicated "Notification Date" to the following e-mail address(es):

Docket@kilpatricktownsend.com
ipefiling@kilpatricktownsend.com
jlhice@kilpatrick.foundationip.com

UNITED STATES PATENT AND TRADEMARK OFFICE

Commissioner for Patents
United States Patent and Trademark Office
P.O. Box 1450
Alexandria, VA 22313-1450
www.uspto.gov

MAY 3 1 2010

KILPATRICK TOWNSEND & STOCKTON LLP
TWO EMBARCADERO CENTER
EIGHTH FLOOR
SAN FRANCISCO, CA 94111-3834

| | | |
|---|---|---|
| In re application of<br>Robert Degen et al.<br>Application No. 10/434,409<br>Filed: May 7, 2003<br>For: SYSTEMS AND METHODS FOR GRADUATED SUSPICIOUS ACTIVITY DETECTION | :<br>:<br>:<br>:<br>:<br>: | **DECISION ON PETITION TO MAKE SPECIAL** |

This is in response to the petition filed on May 7, 2003 to make the above-identified application special on the basis of inventions for countering terrorism as set forth in MPEP § 708.02 XI. The delay in treating this petition is regretted.

The requirements for granting special status under this section are: (A) a petition to make special accompanied by the fee set forth in 37 CFR 1.17(i); (B) all claims being directed to a single invention, or an election without traverse if the Office determines that all the claims are not directed to a single invention; (C) a statement that a pre-examination search was made listing the field of search; (D) one copy of each of the references deemed most closely related to the subject matter encompassed by the claims if said references are not already of record; and (E) a detailed discussion of how the claimed subject matter is patentable over the references.

The petition filed May 7, 2003 fails to adequately meet requirement (E) above. Petitioner indicates that the "present invention provides an ability to monitor transactions occurring on one or more value transfer systems" especially "all activities associated with a known or suspected terrorist" such that "authorities can be directed to the location where the transaction is being initiated, or where the transaction is being completed" and thus would contribute to countering terrorism. Nothing in the invention acts to directly counter terrorism, but would appear to provide an improvement in evaluating value transfers. MPEP § 708.02 XI lists examples of types of inventions that would qualify as countering terrorism. While a grantable petition is not limited to these examples, these examples all clearly act to directly counter terrorism. Although one of the uses of the instant invention may be to monitor activities associated with a known or suspected terrorist, the invention itself does not act directly to counter terrorism. As noted in MPEP 708.02, "the materiality standard does not permit an applicant to

speculate as to how a hypothetical end-user might specially apply the invention in a manner that could counter terrorism. Nor does such standard permit an applicant to enjoy the benefit of advanced examination merely because some minor aspect of the claimed invention may be directed to countering terrorism." Thus, the argument by the applicant is not seen as being sufficient to accord special status to this application.

Any request for reconsideration must be filed within TWO MONTHS of the date of this decision. Extensions of time under 37 CFR 1.136(a) are permitted.

For the above stated reason, the petition is **DISMISSED**.

Any inquiry regarding this decision should be directed to Teri Luu at (571) 272-7045.

/Teri P. Luu/
Teri P. Luu
Quality Assurance Specialist
Technology Center 3600

tl: 05/27/11

UNITED STATES PATENT AND TRADEMARK OFFICE

Commissioner for Patents
United States Patent and Trademark Office
P.O. Box 1450
Alexandria, VA 22313-1450
www.uspto.gov

ROBERT D. SHEDD, PATENT OPERATIONS
THOMSON LICENSING LLC
P.O. BOX 5312
PRINCETON, NJ 08543-5312

MAILED
NOV 22 2010
OFFICE OF PETITIONS

In re Application of :
Alex Holtz et al :
Application No. 10/434,461 :
Filed: May 9, 2003 :
Attorney Docket No. PU040216 :

ON PETITION

This is a decision on the petition under 37 CFR 1.137(b), filed October 18, 2010, to revive the above-identified application.

The petition is **GRANTED**.

This application became abandoned as a result of petitioner's failure to file an appeal brief (and fee required by 37 CFR 41.20(b)(2)) within the time period provided in 37 CFR 41.37(a)(1). As an appeal brief (and appeal brief fee) was not filed within two (2) months of the Notice of Appeal filed January 29, 2010, and no extensions of time under the provisions of 37 CFR 1.136(a) were obtained, the appeal was dismissed and the proceedings as to the rejected claims were terminated. See 37 CFR 1.197(b). As no claim was allowed, the application became abandoned on March 30, 2010. See MPEP 1215.04.

Telephone inquiries concerning this decision should be directed to Irvin Dingle at (571) 272-3210.

This matter is being referred to Technology Center AU 2173 for further processing.

Irvin Dingle
Petitions Examiner
Office of Petitions

UNITED STATES PATENT AND TRADEMARK OFFICE

Commissioner for Patents
United States Patent and Trademark Office
P.O. Box 1450
Alexandria, VA 22313-1450
www.uspto.gov

Cooper & Dunham LLP.
30 Rockefeller Plaza
New York, New York 10112

MAILED
DEC 08 2011
OFFICE OF PETITIONS

| | |
|---|---|
| In re Patent No. 7521593<br>Regina et al.<br>Issue Date: April 21, 2009<br>Application No. 10/434,893<br>Filed: May 9, 2003<br>Attorney Docket No.<br>0070/69425/JPW/FHB<br>Title: Barley with Altered Branching Enzyme Activity and Starch and Starch Containing Products with an Increased Amylose Content | DECISION UPON REMAND AND RECONSIDERATION OF PATENT TERM ADJUSTMENT AND NOTICE OF INTENT TO ISSUE CERTIFICATE OF CORRECTION |

This is a decision following remand from the District Court for the District of Columbia regarding the patent term adjustment indicated on the above-identified patent. The Court remanded this matter to the U.S. Patent and Trademark Office for recalculation of the patent term adjustment in accordance with the decision in Wyeth & Elan Pharma Int'l Ltd. v. Kappos, 591 F.3d 1364 (Fed. Cir. 2010).

A telephone conference between Ben Wood, Office of the Solicitor USPTO, and counsel for plaintiff reached an agreement as to the amount of PTA to be awarded.

The patent term adjustment indicated on the above-identified patent has been recalculated as directed by the Court. The term of the above-identified patent is extended or adjusted by eight hundred and thirty-eight (838) days.

The application is being forwarded to the Certificates Branch for issuance of a certificate of correction indicating that the

term of the above-identified patent is extended or adjusted by eight hundred and thirty-eight (838) days.

Telephone inquiries specific to this matter should be directed to Senior Legal Advisor, Kery A. Fries at (571) 272-7757.

/Kery A. Fries/

Kery A. Fries
Senior Legal Advisor Attorney
Office of Patent Legal Administration
Office of Associate Commissioner
For Patent Examination Policy

Enclosure: Copy of DRAFT Certificate of Correction

Adjusted PTA calculation

UNITED STATES PATENT AND TRADEMARK OFFICE

# CERTIFICATE OF CORRECTION

PATENT : 7,521,593

DATED : April 21, 2009 **DRAFT**

INVENTOR(S) : Regina et al

It is certified that error appears in the above-identified patent and that said Letters Patent is hereby corrected as shown below:

On the cover page,

[*] Notice: Subject to any disclaimer, the term of this patent is extended or adjusted under 35 USC 154(b) by 247 days

Delete the phrase "by 247 days" and insert – by 893 days--

PTA/PTE Information | Patent Term Adjustment | Patent Term Extension

Application Number*: 10434893 Search Explanation of PTA Calculation Explanation of PTE Calculation

## PTA Calculations for Application: 10434893

| | | | |
|---|---|---|---|
| Application Filing Date | 05/09/2003 | OverLapping Days Between (A and B) or (A and C) | 0 |
| Issue Date of Patent | 04/21/2009 | Non-Overlapping USPTO Delays: | 615 |
| A Delays | 585 | PTO Manual Adjustment | 580 |
| B Delays | 30 | Applicant Delay (APPL) | 357 |
| C Delays | 0 | Total PTA (days) | 838 |

* - Sorted Column

## File Contents History

| Action Number | Action Recorded Date | Action Due Date | Action Code | Action Description | Duration PTO | Duration APPL | Parent Action Number |
|---|---|---|---|---|---|---|---|
| 98 | 12/08/2011 | | P028 | Adjustment of PTA Calculation by PTO | 591 | | 0 |
| 92 | 09/15/2009 | | P026 | Record a Petition Decision of Granted for Patent Term Adjustment after Issue | | | 0 |
| 91 | 09/14/2009 | | P028 | Adjustment of PTA Calculation by PTO | | 35 | 0 |
| 90 | 09/14/2009 | | P028 | Adjustment of PTA Calculation by PTO | 24 | | 0 |
| 85 | 04/21/2009 | | PTAC | Patent Issue Date Used in PTA Calculation | | | 0 |
| 85.5 | 04/01/2009 | 05/09/2006 | PTA36M | PTA 36 Months | 30 | | 0 |
| 84 | 03/13/2009 | | EFDC | Export to Final Data Capture | | | 0 |
| 83 | 03/12/2009 | | D1935 | Dispatch to FDC | | | 0 |
| 82 | 03/12/2009 | | C.AD | Correspondence Address Change | | | 0 |
| 81 | 03/11/2009 | | PILS | Application Is Considered Ready for Issue | | | 0 |
| 80 | 03/09/2009 | 03/03/2009 | N084 | Issue Fee Payment Verified | | 6 | 67 |
| 79 | 03/09/2009 | | IFEE | Issue Fee Payment Received | | | 0 |
| 77 | 02/25/2009 | | FIDC | Finished Initial Data Capture | | | 0 |
| 78 | 02/09/2009 | | DRWF | Workflow - Drawings Finished | | 72 | 0 |
| 76 | 01/27/2009 | | QURF | Workflow - Query Request - Finish | | | 0 |
| 75 | 01/22/2009 | | TCPB | Printer Rush- No mailing | | | 0 |
| 74 | 01/22/2009 | | MM327-D | Mail PUB other miscellaneous communication to applicant | | | 0 |
| 73 | 01/22/2009 | | M327-D | PUB Other miscellaneous communication to applicant | | | 0 |
| 72 | 12/31/2008 | | QURI | Workflow - Query Request - Begin | | | 0 |
| 71 | 12/19/2008 | | CRFT | Sequence Forwarded to Pubs on Tape | | | 0 |
| 70 | 12/17/2008 | | C.ADB | Correspondence Address Change | | | 0 |
| 69 | 12/08/2008 | | EIDC | Export to Initial Data Capture | | | 0 |
| 67 | 12/03/2008 | | MN/=. | Mail Notice of Allowance | | | 0 |
| 65 | 11/24/2008 | | EX.A | Examiner's Amendment Communication | | | 0 |
| 64 | 11/24/2008 | | N/=. | Notice of Allowance Data Verification Completed | | | 0 |
| 63 | 11/24/2008 | | CNTA | Allowability Notice | | | 0 |
| 66 | 11/19/2008 | | EXIN | Examiner Interview Summary Record (PTOL - 413) | | | 0 |
| 59 | 09/18/2008 | | FWDX | Date Forwarded to Examiner | | | 0 |
| 58 | 08/07/2008 | 07/03/2008 | A... | Response after Non-Final Action | | 35 | 56 |
| 57 | 08/07/2008 | | XT/G | Request for Extension of Time - Granted | | | 0 |
| 56 | 04/03/2008 | | MCTNF | Mail Non-Final Rejection | | | 0 |
| 55 | 03/31/2008 | | CTNF | Non-Final Rejection | | | 0 |
| 53 | 01/29/2008 | | FWDX | Date Forwarded to Examiner | | | 0 |
| 51 | 01/29/2008 | | FWDX | Date Forwarded to Examiner | | | 0 |
| 49 | 01/29/2008 | | ABN9 | Disposal for a RCE / CPA / R129 | | | 0 |
| 54 | 01/14/2008 | | IDSC | Information Disclosure Statement considered | | | 0 |
| 52 | 01/14/2008 | | AMSB | Amendment Submitted/Entered with Filing of CPA/RCE | | | 0 |
| 50 | 01/14/2008 | 10/11/2007 | RCEX | Request for Continued Examination (RCE) | | 95 | 42 |
| 48 | 01/14/2008 | | XT/G | Request for Extension of Time - Granted | | | 0 |
| 47 | 01/14/2008 | | RCAP | Reference capture on IDS | | | 0 |
| 46 | 01/14/2008 | | M844 | Information Disclosure Statement (IDS) Filed | | | 0 |
| 45 | 01/14/2008 | | LET. | Miscellaneous Incoming Letter | | | 0 |
| 44 | 01/14/2008 | | WIDS | Information Disclosure Statement (IDS) Filed | | | 0 |
| 43 | 01/14/2008 | | BRCE | Workflow - Request for RCE - Begin | | | 0 |
| 42 | 07/11/2007 | | MCTFR | Mail Final Rejection (PTOL - 326) | | | 0 |
| 41 | 07/09/2007 | | CTFR | Final Rejection | | | 0 |
| 40 | 05/07/2007 | | FWDX | Date Forwarded to Examiner | | | 0 |
| 39 | 04/23/2007 | 01/19/2007 | A... | Response after Non-Final Action | | 94 | 37 |
| 38 | 04/23/2007 | | XT/G | Request for Extension of Time - Granted | | | 0 |
| 37 | 10/19/2006 | | MCTNF | Mail Non-Final Rejection | | | 0 |
| 36 | 10/16/2006 | | CTNF | Non-Final Rejection | | | 0 |
| 35 | 09/05/2006 | | IDSC | Information Disclosure Statement considered | | | 0 |
| 33 | 09/05/2006 | | RCAP | Reference capture on IDS | | | 0 |
| 32.7 | 09/05/2006 | 08/09/2006 | M844 | Information Disclosure Statement (IDS) Filed | | 27 | 28 |
| 32 | 09/05/2006 | | WIDS | Information Disclosure Statement (IDS) Filed | | | 0 |

| | | | | | | | |
|---|---|---|---|---|---|---|---|
| 29 | 08/17/2006 | | FWDX | Date Forwarded to Examiner | | | 0 |
| 34 | 08/09/2006 | | IDSC | Information Disclosure Statement considered | | | 0 |
| 31 | 08/09/2006 | | RCAP | Reference capture on IDS | | | 0 |
| 30.7 | 08/09/2006 | | M844 | Information Disclosure Statement (IDS) Filed | | | 0 |
| 30 | 08/09/2006 | | WIDS | Information Disclosure Statement (IDS) Filed | | | 0 |
| 28 | 08/09/2006 | 08/05/2006 | ELC. | Response to Election / Restriction Filed | | 4 | 26 |
| 27 | 08/09/2006 | | XT/G | Request for Extension of Time - Granted | | | 0 |
| 26 | 05/05/2006 | | MCTRS | Mail Restriction Requirement | | | 0 |
| 25 | 04/28/2006 | | CTRS | Restriction/Election Requirement | | | 0 |
| 24 | 03/23/2006 | | FWDX | Date Forwarded to Examiner | | | 0 |
| 23 | 03/16/2006 | | ELC. | Response to Election / Restriction Filed | | | 0 |
| 22 | 02/14/2006 | 07/09/2004 | MCTRS | Mail Restriction Requirement | 585 | | -1 |
| 21 | 02/10/2006 | | CTRS | Restriction/Election Requirement | | | 0 |
| 20 | 01/23/2006 | | DOCK | Case Docketed to Examiner in GAU | | | 0 |
| 18 | 03/11/2004 | | TSSCOMP | IFW TSS Processing by Tech Center Complete | | | 0 |
| 16 | 03/11/2004 | | DOCK | Case Docketed to Examiner in GAU | | | 0 |
| 15 | 12/15/2003 | | OIPE | Application Dispatched from OIPE | | | 0 |
| 14 | 12/15/2003 | | COMP | Application Is Now Complete | | | 0 |
| 9 | 12/09/2003 | | CRFF | Error(s) in CRF Corrected by STIC | | | 0 |
| 13 | 11/17/2003 | 10/24/2003 | ADDFLFEE | Additional Application Filing Fees | | 24 | 8 |
| 12 | 11/17/2003 | | CRFL | CRF Disk Has Been Received by Preexam / Group / PCT | | | 0 |
| 11 | 11/17/2003 | | OATHDECL | A statement by one or more inventors satisfying the requirement under 35 USC 115, Oath of the Applic | | | 0 |
| 10 | 11/17/2003 | | CORRDRW | Applicant has submitted new drawings to correct Corrected Papers problems | | | 0 |
| 19 | 08/08/2003 | | IDSC | Information Disclosure Statement considered | | | 0 |
| 17.7 | 08/08/2003 | | M844 | Information Disclosure Statement (IDS) Filed | | | 0 |
| 17 | 08/08/2003 | | WIDS | Information Disclosure Statement (IDS) Filed | | | 0 |
| 8 | 07/24/2003 | | INCD | Notice Mailed--Application Incomplete--Filing Date Assigned | | | 0 |
| 5 | 06/04/2003 | | CRFD | CRF Is Flawed Technically / Not Entered into Database | | | 0 |
| 4 | 05/30/2003 | | SCAN | IFW Scan & PACR Auto Security Review | | | 0 |
| 3 | 05/22/2003 | | SCAN | IFW Scan & PACR Auto Security Review | | | 0 |
| 6 | 05/09/2003 | | CRFL | CRF Disk Has Been Received by Preexam / Group / PCT | | | 0 |
| 2 | 05/09/2003 | | CRFL | CRF Disk Has Been Received by Preexam / Group / PCT | | | 0 |
| 1 | 05/09/2003 | | IEXX | Initial Exam Team nn | | | 0 |

Export to: Excel

## SPE RESPONSE FOR CERTIFICATE OF CORRECTION

**Paper No.**:20111107

**DATE** : September 29, 2011

**TO SPE OF** : ART UNIT

**SUBJECT** : Request for Certificate of Correction on Patent No.: 10/435,080

A response is requested with respect to the accompanying request for a certificate of correction.

Please complete this form and return with file, within **7** days to:
**Certificates of Correction Branch - ST (South Tower) 9A22**
Palm location **7590** - Tel. No. (703) 305-8309

With respect to the change(s) requested, correcting Office and/or Applicant's errors, should the patent read as shown in the certificate of correction? No new matter should be introduced, nor should the scope or meaning of the claims be changed.

**Thank You For Your Assistance** **Certificates of Correction Branch**

**The request for issuing the above-identified correction(s) is hereby:**

Note your decision on the appropriated box.

☒ **Approved** All changes apply.

☐ **Approved in Part** Specify below which changes **do not** apply.

☐ **Denied** State the reasons for denial below.

**Comments:**

OK to enter the correction of inventor name to: Ein-Yiao Shen

/CHARLES APPIAH/
Supervisory Patent Examiner.Art Unit 2617

## SPE RESPONSE FOR CERTIFICATE OF CORRECTION

**Paper No.**:20111107

**DATE** : September 29, 2011

**TO SPE OF** : ART UNIT

**SUBJECT** : Request for Certificate of Correction on Patent No.: 10/435,080

A response is requested with respect to the accompanying request for a certificate of correction.

Please complete this form and return with file, within **7** days to:
**Certificates of Correction Branch - ST (South Tower) 9A22**
Palm location **7590** - Tel. No. (703) 305-8309

With respect to the change(s) requested, correcting Office and/or Applicant's errors, should the patent read as shown in the certificate of correction? No new matter should be introduced, nor should the scope or meaning of the claims be changed.

**Thank You For Your Assistance** **Certificates of Correction Branch**

**The request for issuing the above-identified correction(s) is hereby:**

Note your decision on the appropriated box.

☒ **Approved** All changes apply.

☐ **Approved in Part** Specify below which changes **do not** apply.

☐ **Denied** State the reasons for denial below.

**Comments:**

OK to enter the correction of inventor name to: Ein-Yiao Shen

/CHARLES APPIAH/
Supervisory Patent Examiner.Art Unit 2617

UNITED STATES DEPARTMENT OF COMMERCE
U.S. Patent and Trademark Office
Address : COMMISSIONER FOR PATENTS
P.O. Box 1450
Alexandria, Virginia 22313-1450

| APPLICATION NO./ CONTROL NO. | FILING DATE | FIRST NAMED INVENTOR / PATENT IN REEXAMINATION | ATTORNEY DOCKET NO. |
|---|---|---|---|
| 10/435,080 | 12 May, 2003 | SHEN, YUAN-YAO | PB030044 |

| | | EXAMINER | |
|---|---|---|---|
| HDLS Patent & Trademark Services<br>P.O. BOX 220746<br>CHANTILLY, VA 20153-0746 | | KIET DOAN | |
| | | ART UNIT | PAPER |
| | | 2617 | 20111108 |

DATE MAILED:

**Please find below and/or attached an Office communication concerning this application or proceeding.**

**Commissioner for Patents**

Correction of inventoe name: Ein-Yiao Shen

| | |
|---|---|
| /Charles Appiah/<br>Supervisory Patent Examiner Art Unit 2617 | /Kiet Doan/<br>Primary Examiner, Art Unit 2617 |

UNITED STATES PATENT AND TRADEMARK OFFICE

Commissioner for Patents
United States Patent and Trademark Office
P.O. Box 1450
Alexandria, VA 22313-1450
www.uspto.gov

MICHAEL L GOLDMAN
NIXON PEABODY LLP
CLINTON SQUARE
PO BOX 31051
ROCHESTER NY 14603

**MAILED**

AUG 30 2010

**OFFICE OF PETITIONS**

| | | |
|---|---|---|
| In re Application of | : | |
| Obendorf, et al. | : | |
| Application No. 10/435,226 | : | ON REQUEST FOR |
| Filed: May 9, 2003 | : | RECONSIDERATION OF |
| Attorney Docket Number: 19603/3911 | : | PATENT TERM ADJUSTMENT |

This is a decision on the petition under 37 CFR 1.705(b), filed May 17, 2010. Applicant believes that they should be accorded an additional PTA of 639 days. Applicant requests this correction solely on the basis that the Office will take in excess of three years to issue this patent.

Insofar as the instant application for patent term adjustment requests reconsideration of the patent term adjustment solely as it relates to the Office's failure to issue the patent within 3 years of the filing date, the application for patent term adjustment under 37 CFR 1.705(b) is **DISMISSED as PREMATURE**.

Knowledge of the actual date the patent issues is required to calculate the amount, if any, of additional patent term patentee is entitled to for Office failure to issue the patent within 3 years. See § 1.702(b). (This is true even where a request for continued examination (RCE) was filed). The computer will not undertake the § 1.702(b) calculation until the actual date of issuance of the patent has been determined. Likewise, the computer will not calculate any further Office delay under § 1.702(a)(4) or applicant delay under § 1.704(c)(10) until the actual date of issuance of the patent has been determined. As such, the Office can not make a determination on the correctness of the patent term adjustment until the patent has issued.

Requesting reconsideration of the patent term adjustment to be indicated on the patent under 37 CFR 1.705(b) based on the initial determination of patent term adjustment and a projected issuance date of the patent (or even the filing date of the request for continued examination) is premature. Accordingly, it is appropriate to dismiss as premature such a request.

Rather than file a request for reconsideration of patent term adjustment under 37 CFR 1.705(b) contesting the 37 CFR 1.702(b) calculation at the time of the mailing of the notice of allowance, applicants are advised that they may wait until the time of the issuance of the patent and file a request for reconsideration of the patent term adjustment pursuant to 37 CFR 1.705(d). As the USPTO does not calculate the amount of time earned pursuant to 37 CFR 1.702(b) until the time of the issuance of the patent, the Office will consider any request for reconsideration of the patent term adjustment due to an error in the calculation of 37 CFR 1.702(b) to be timely if the request for reconsideration is filed within two months of the issuance of the patent. However, as to all other bases for contesting the initial determination of patent term adjustment received with the notice of allowance, applicant must timely file an application for patent term adjustment prior to the payment of the issue fee[1].

Furthermore, a review of the application reveals that applicants should have been accorded additional days of Applicant delay pursuant to 37 CFR 1.704(c)(10). The Office mailed a Notice of Allowance on October 7, 2009. In response, applicants filed an RCE on January 6, 2010. In response, the Office mailed a Notice of Allowance on February 16, 2010. Accordingly, pursuant to 37 CFR 1.704(c)(10), forty-two (42) days of Applicant delay should have been assessed for the filing of the RCE.

In view thereof, the correct determination of PTA prior to issuance is **three hundred three (303) days** (497 days of PTO delay, reduced by 194 (5+90+57+42) days of Applicant delay).

Receipt of the $200.00 fee set forth in 37 CFR 1.18(e) is acknowledged.

The application is being forwarded to the Office of Data Management for issuance of the patent.

Telephone inquiries specific to this decision should be directed to Petitions Attorney Cliff Congo at (571) 272-3207.

Anthony Knight
Director
Office of Petitions

Enc: copy of PALM screen

---

[1] For example, if applicant disputes both the calculation of patent term adjustment under 37 CFR 1.702(a)(1) for Office failure to mail a first Office action or notice of allowance not later than fourteen months after the date on which the application was filed and under 37 CFR 1.702(b) for Office failure to issue a patent within three years of the actual filing date of the application, then applicant must still timely file an application for patent term adjustment prior to the payment of the issue fee to contest the calculation of Office delay in issuing a first Office action or notice of allowance. See 37 CFR 1.705(b) and 35 U.S.C. 154(b)(3)(B). A dispute as to the calculation of the §1.702(a)(1) period raised on request for reconsideration of patent term adjustment under 37 CFR 1.705(d) will be dismissed as untimely filed.

Day : Saturday
Date: 8/14/2010

PALM INTRANET

Time: 13:55:29

| PTA Calculations for Application: 10/435226 | | | |
|---|---|---|---|
| Application Filing Date: | 05/09/2003 | PTO Delay (PTO): | 497 |
| Issue Date of Patent: | | Three Years: | 0 |
| Pre-Issue Petitions: | 0 | Applicant Delay (APPL): | 152 |
| Post-Issue Petitions: | 0 | Total PTA (days): | 303 |
| PTO Delay Adjustment: | -42 | | |

**File Contents History**

| Number | Date | Contents Description | PTO | APPL | START |
|---|---|---|---|---|---|
| 121 | 08/14/2010 | ADJUSTMENT OF PTA CALCULATION BY PTO | | 42 | |
| 114 | 02/16/2010 | MAIL NOTICE OF ALLOWANCE | | | |
| 113 | 02/09/2010 | NOTICE OF ALLOWANCE DATA VERIFICATION COMPLETED | | | |
| 112 | 02/01/2010 | ISSUE REVISION COMPLETED | | | |
| 108 | 01/27/2010 | ALLOWED CASE RETURNED TO THE EXAMINER FOR CLERICAL PROCESSING | | | |
| 107 | 01/27/2010 | DOCUMENT VERIFICATION | | | |
| 106 | 01/19/2010 | NOTICE OF ALLOWABILITY | | | |
| 105 | 01/06/2010 | INFORMATION DISCLOSURE STATEMENT CONSIDERED | | | |
| 104 | 01/06/2010 | REQUEST FOR CONTINUED EXAMINATION (RCE) | | | |
| 103 | 01/13/2010 | DISPOSAL FOR A RCE / CPA / R129 | | | |
| 102 | 01/06/2010 | ELECTRONIC INFORMATION DISCLOSURE STATEMENT | | | |
| 101 | 01/06/2010 | INFORMATION DISCLOSURE STATEMENT (IDS) FILED | | | |
| 100 | 01/06/2010 | WORKFLOW - REQUEST FOR RCE - BEGIN | | | |
| 99 | 12/04/2009 | FINISHED INITIAL DATA CAPTURE | | | |
| 98 | 11/03/2009 | SEQUENCE FORWARDED TO PUBS ON TAPE | | | |
| 97 | 10/12/2009 | EXPORT TO INITIAL DATA CAPTURE | | | |
| 96 | 10/07/2009 | MAIL EXAMINER'S AMENDMENT | | | |
| 95 | 10/07/2009 | MAIL NOTICE OF ALLOWANCE | | | |
| 94 | 10/07/2009 | ISSUE REVISION COMPLETED | | | |
| 93 | 10/07/2009 | DOCUMENT VERIFICATION | | | |
| 92 | 10/07/2009 | NOTICE OF ALLOWANCE DATA VERIFICATION COMPLETED | | | |

| | | | | | |
|---|---|---|---|---|---|
| 91 | 10/07/2009 | EXAMINER'S AMENDMENT COMMUNICATION | | | |
| 90 | 10/07/2009 | NOTICE OF ALLOWABILITY | | | |
| 89 | 10/05/2009 | MAIL NON-FINAL REJECTION | | | |
| 88 | 10/01/2009 | NON-FINAL REJECTION | | | |
| 87 | 09/24/2009 | EXAMINER INTERVIEW SUMMARY RECORD (PTOL - 413) | | | |
| 86 | 07/22/2009 | DATE FORWARDED TO EXAMINER | | | |
| 85 | 07/16/2009 | AMENDMENT SUBMITTED/ENTERED WITH FILING OF CPA/RCE | | | |
| 84 | 07/22/2009 | DATE FORWARDED TO EXAMINER | | | |
| 83 | 07/16/2009 | REQUEST FOR CONTINUED EXAMINATION (RCE) | | 57 | 72 |
| 82 | 07/22/2009 | DISPOSAL FOR A RCE / CPA / R129 | | | |
| 81 | 07/16/2009 | REQUEST FOR EXTENSION OF TIME - GRANTED | | | |
| 80 | 07/16/2009 | WORKFLOW - REQUEST FOR RCE - BEGIN | | | |
| 79 | 07/07/2009 | MAIL ADVISORY ACTION (PTOL - 303) | | | |
| 78 | 07/06/2009 | ADVISORY ACTION (PTOL-303) | | | |
| 77 | 06/26/2009 | DATE FORWARDED TO EXAMINER | | | |
| 76 | 06/22/2009 | AMENDMENT AFTER FINAL REJECTION | | | |
| 75 | 06/22/2009 | REQUEST FOR EXTENSION OF TIME - GRANTED | | | |
| 74 | 06/04/2009 | MAIL EXAMINER INTERVIEW SUMMARY (PTOL - 413) | | | |
| 73 | 06/02/2009 | EXAMINER INTERVIEW SUMMARY RECORD (PTOL - 413) | | | |
| 72 | 02/20/2009 | MAIL FINAL REJECTION (PTOL - 326) | | | |
| 71 | 02/17/2009 | FINAL REJECTION | | | |
| 70 | 12/12/2008 | DATE FORWARDED TO EXAMINER | | | |
| 69 | 12/01/2008 | RESPONSE AFTER NON-FINAL ACTION | | | |
| 68 | 09/02/2008 | MAIL NON-FINAL REJECTION | | | |
| 67 | 08/29/2008 | NON-FINAL REJECTION | | | |
| 66 | 06/03/2008 | OATH OR DECLARATION FILED (INCLUDING SUPPLEMENTAL) | | | |
| 64 | 06/19/2008 | DATE FORWARDED TO EXAMINER | | | |
| 63 | 06/03/2008 | AMENDMENT SUBMITTED/ENTERED WITH FILING OF CPA/RCE | | | |
| 62 | 06/19/2008 | DATE FORWARDED TO EXAMINER | | | |
| 60 | 06/19/2008 | DISPOSAL FOR A RCE / CPA / R129 | | | |
| | | REQUEST FOR EXTENSION OF TIME - GRANTED | | | |

| | | | | | |
|---|---|---|---|---|---|
| 59 | 06/03/2008 | | | | |
| 58 | 06/03/2008 | WORKFLOW - REQUEST FOR RCE - BEGIN | | | |
| 57 | 03/13/2008 | MAIL EXAMINER INTERVIEW SUMMARY (PTOL - 413) | | | |
| 56 | 03/04/2008 | EXAMINER INTERVIEW SUMMARY RECORD (PTOL - 413) | | | |
| 55 | 02/07/2008 | NOTICE OF APPEAL FILED | | 90 | 46 |
| 54 | 02/07/2008 | REQUEST FOR EXTENSION OF TIME - GRANTED | | | |
| 53 | 01/11/2008 | MAIL ADVISORY ACTION (PTOL - 303) | | | |
| 52 | 01/09/2008 | ADVISORY ACTION (PTOL-303) | | | |
| 51 | 12/14/2007 | DATE FORWARDED TO EXAMINER | | | |
| 50 | 12/07/2007 | AMENDMENT AFTER FINAL REJECTION | | | |
| 49 | 12/07/2007 | REQUEST FOR EXTENSION OF TIME - GRANTED | | | |
| 48 | 09/13/2007 | MAIL EXAMINER INTERVIEW SUMMARY (PTOL - 413) | | | |
| 47 | 09/12/2007 | EXAMINER INTERVIEW SUMMARY RECORD (PTOL - 413) | | | |
| 46 | 08/09/2007 | MAIL FINAL REJECTION (PTOL - 326) | | | |
| 45 | 08/06/2007 | FINAL REJECTION | | | |
| 43 | 06/04/2007 | DATE FORWARDED TO EXAMINER | | | |
| 42 | 06/01/2007 | RESPONSE AFTER NON-FINAL ACTION | | | |
| 41 | 03/01/2007 | MAIL NON-FINAL REJECTION | | | |
| 40 | 02/28/2007 | NON-FINAL REJECTION | | | |
| 39 | 02/28/2007 | MAIL NOTICE OF WITHDRAWN ACTION | | | |
| 38 | 02/28/2007 | LETTER WITHDRAWING / VACATING OFFICE ACTION | | | |
| 37 | 12/19/2006 | MAIL EXAMINER INTERVIEW SUMMARY (PTOL - 413) | | | |
| 36 | 12/05/2006 | EXAMINER INTERVIEW SUMMARY RECORD (PTOL - 413) | | | |
| 35 | 09/11/2006 | MAIL FINAL REJECTION (PTOL - 326) | | | |
| 34 | 09/05/2006 | FINAL REJECTION | | | |
| 33 | 06/15/2006 | INFORMATION DISCLOSURE STATEMENT CONSIDERED | | | |
| 32.7 | 06/15/2006 | INFORMATION DISCLOSURE STATEMENT (IDS) FILED | | 0 | 30 |
| 32 | 06/15/2006 | INFORMATION DISCLOSURE STATEMENT (IDS) FILED | | | |
| | | | | | |

| | | | | | |
|---|---|---|---|---|---|
| 31 | 06/21/2006 | DATE FORWARDED TO EXAMINER | | | |
| 30 | 06/15/2006 | RESPONSE AFTER NON-FINAL ACTION | | 5 | 29 |
| 29 | 03/10/2006 | MAIL NON-FINAL REJECTION | | | |
| 28 | 03/06/2006 | NON-FINAL REJECTION | | | |
| 27 | 12/08/2003 | INFORMATION DISCLOSURE STATEMENT CONSIDERED | | | |
| 26 | 01/03/2006 | DATE FORWARDED TO EXAMINER | | | |
| 25 | 12/19/2005 | RESPONSE TO ELECTION / RESTRICTION FILED | | | |
| 24 | 11/18/2005 | MAIL RESTRICTION REQUIREMENT | 497 | | -1 |
| 23 | 11/14/2005 | REQUIREMENT FOR RESTRICTION / ELECTION | | | |
| 22 | 08/24/2004 | MISCELLANEOUS INCOMING LETTER | | | |
| 21 | 04/15/2004 | IFW TSS PROCESSING BY TECH CENTER COMPLETE | | | |
| 20 | 10/27/2003 | OATH OR DECLARATION FILED (INCLUDING SUPPLEMENTAL) | | | |
| 19 | 04/15/2004 | CASE DOCKETED TO EXAMINER IN GAU | | | |
| 18 | 01/22/2004 | REFERENCE CAPTURE ON IDS | | | |
| 17.7 | 12/08/2003 | INFORMATION DISCLOSURE STATEMENT (IDS) FILED | | | |
| 17 | 12/08/2003 | INFORMATION DISCLOSURE STATEMENT (IDS) FILED | | | |
| 16 | 11/04/2003 | APPLICATION RETURN FROM OIPE | | | |
| 15 | 11/05/2003 | APPLICATION IS NOW COMPLETE | | | |
| 14 | 11/04/2003 | PRE-EXAM OFFICE ACTION WITHDRAWN | | | |
| 13 | 11/04/2003 | APPLICATION RETURN TO OIPE | | | |
| 12 | 11/04/2003 | APPLICATION DISPATCHED FROM OIPE | | | |
| 11 | 11/04/2003 | APPLICATION IS NOW COMPLETE | | | |
| 10 | 10/24/2003 | ADDITIONAL APPLICATION FILING FEES | | | |
| 9 | 10/24/2003 | A STATEMENT BY ONE OR MORE INVENTORS SATISFYING THE REQUIREMENT UNDER 35 USC 115, OATH OF THE APPLIC | | | |
| 8 | 07/24/2003 | NOTICE MAILED--APPLICATION INCOMPLETE--FILING DATE ASSIGNED | | | |
| 6 | 06/04/2003 | CRF IS GOOD TECHNICALLY / ENTERED INTO DATABASE | | | |
| 5 | 05/30/2003 | CLEARED BY L&R (LARS) | | | |
| 4 | 05/29/2003 | IFW SCAN & PACR AUTO SECURITY REVIEW | | | |
| 3 | 05/22/2003 | IFW SCAN & PACR AUTO SECURITY REVIEW | | | |
| 2 | 05/09/2003 | CRF DISK HAS BEEN RECEIVED BY PREEXAM / GROUP / PCT | | | |

| | | | | | |
|---|---|---|---|---|---|
| 1 | 05/09/2003 | INITIAL EXAM TEAM NN | | | |

**Search Another: Application#** [ ] Search

**EXPLANATION OF PTA CALCULATION**

**EXPLANATION OF PTE CALCULATION**

To go back, right click here and select Back. To go forward, right click here and select Forward. To refresh, right click here and select Refresh.

Back to OASIS | Home page

UNITED STATES PATENT AND TRADEMARK OFFICE

Commissioner for Patents
United States Patent and Trademark Office
P.O. Box 1450
Alexandria, VA 22313-1450
www.uspto.gov

Partners HealthCare
Research and Licensing Department
101 Huntington Avenue 4th Floor
Boston MA 02199

MAILED
AUG 20 2010
OFFICE OF PETITIONS

| | | |
|---|---|---|
| In re Application of<br>Richard T. Lee<br>Patent Number: 7,670,769<br>Issue Date: 03/02/2010<br>Application No. 10/435482<br>Filing or 371(c) Date: 05/09/2003<br>Attorney Docket Number:<br>25996-0002001/BWH 0825 | :<br>:<br>:<br>:<br>:<br>:<br>:<br>: | DECISION ON<br>APPLICATION FOR<br>PATENT TERM ADJUSTMENT<br>and<br>NOTICE OF INTENT TO ISSUE<br>CERTIFICATE OF CORRECTION |

This is a corrected decision on the petition filed on filed May 3, 2010, under 37 CFR 1.705(d), requesting correction of the patent term adjustment of 864 days indicated on the above-identified patent. This requested correction includes an assertion that the Office erred in neglecting to assess Applicant delays in connection with petitions to withdraw the application from issuance, and submission of an Information Disclosure Statement, and the Office erred in assessing Applicant delay in connection with the filing of a document entitled "Comments on Statement of Reasons for Allowance."

The petition to correct the patent term adjustment of 864 days indicated on the above-identified patent is **GRANTED to the extent indicated herein.**

Patentee avers that the Office errantly failed to assess a reduction in connection with the filing of a Petition to Withdraw from Issuance, filed September 24, 2007.

Patentee next provides that the Office errantly failed to assess a reduction in connection with the filing of a supplemental Information Disclosure Statement, filed September 27, 2007.

Patentee also avers that the Office errantly failed to assess a reduction in connection with the filing of a Petition to Withdraw from Issuance, filed April 18, 2008.

Finally, Patentee requests removal of Applicant delay of 89 days pursuant to 37 CFR 1.704(c)(10) in connection with the filing of a document entitled "Comments on Statement of Reasons for Allowance," filed December 4, 2009.

Patentee does not dispute reductions of 32 days, four (4) days, 10 days, 61 days or 67 days pursuant to 37 CFR 1.704(b), or 22 days pursuant to 37 CFR 1.704(c)(10), or an adjustment of 647 days pursuant to 37 CFR 1.702(a)(1).

Regarding the filing of a Petition to Withdraw from Issuance, filed September 24, 2007, a review of the application history confirms that Applicant filed a Request for Continued Examination ("RCE"), along with the Petition to Withdraw from Issuance, on September 24, 2007, after the mailing of a Notice of Allowance on April 3, 2007. The reduction of 10 days, pursuant to 37 CFR 1.704(c)(10), began on the date the RCE was filed, and ended on the mailing date of the Notice of Allowance and issue Fee Due in response to the RCE, October 3, 2007. However, this period of reduction overlaps with a reduction pursuant to 37 CFR 1.704(c)(10) as iterated *infra*.

Regarding the filing of a supplemental Information Disclosure Statement ("IDS"), filed September 27, 2007, a review of the application history confirms that Applicant filed a Request for Continued Examination ("RCE") and submission on September 24, 2007, and thereafter filed a supplemental IDS on September 27, 2007. The reduction of 3 days, pursuant to 37 CFR 1.704(c)(8), began on the day after the date the initial reply was filed, September 25, 2007, and ending on the date the supplemental paper was filed, September 27, 2007. However, this period of reduction also overlaps with a reduction pursuant to 37 CFR 1.704(c)(8) as iterated *infra*.

Regarding the filing of a Petition to Withdraw from Issuance, filed April 18, 2008, a review of the application history confirms that Applicant filed a RCE, along with the Petition to Withdraw from Issuance, was filed on April 18, 2008, after the mailing of a Notice of Allowance and Issue Fee Due on October 3, 2007. The reduction of 15 days, pursuant to 37 CFR 1.704(c)(10), began on the date the RCE was filed, and ended on the mailing date of the non-final Office action in response to the RCE, May 2, 2008.

Regarding the reduction of 89 days in connection with the filing of the document entitled "Comments on Statement of Reasons for Allowance," a review of the application history confirms that the PTA was incorrectly reduced. The submission of a response to the examiner's reasons for allowance is not deemed a failure to engage in reasonable efforts to conclude prosecution. Accordingly, the period of reduction of 89 days entered for the filing of the document entitled "Comments on Statement of Reasons for Allowance," is not warranted and is being removed.

A further review of the application history reveals that this Office errantly neglected to assess a reduction of 222 days in connection with the filing of Amendment filed June 11, 2007, after the mailing of a Notice of Allowance on April 3, 2007. Pursuant to 37 CFR 1.704(c)(10), a reduction of 222 days, beginning on the date the Amendment under § 1.312 was filed, June 11, 2007, and ending on the mailing date of the Office action in response to the amendment under § 1.312 was mailed, January 18, 2008, is appropriate.

A further review of the application history reveals that this Office errantly neglected to assess a reduction of 23 days in connection with the filing of Amendment filed July 2, 2007, after the

mailing of a Notice of Allowance on April 3, 2007. Pursuant to 37 CFR 1.704(c)(10), a reduction of 23 days, beginning on the date the amendment under § 1.312 was filed, July 2, 2007, and ending on the mailing date of the Office action in response to the amendment under § 1.312 was mailed, July 24, 2007, is appropriate. However, this period of reduction overlaps with a reduction pursuant to 37 CFR 1.704(c)(10) as iterated *supra*.

Finally, a review of the application history confirms that Applicant filed two IDS's after the mailing of a Notice of Allowance on October 3, 2007.

Applicant filed an IDS on October 24, 2007, after the mailing of a Notice of Allowance on October 3, 2007. Pursuant to 37 CFR 1.704(c)(10), a reduction of 91 days beginning on the date the IDS was filed, October 24, 2007, and ending on the mailing date of the Office action in response to the IDS was mailed, January 22, 2008, is appropriate. However, the period of reduction overlaps with a reduction of 222 days pursuant to 37 CFR 1.704(c)(10) as iterated *supra*, for a period of 87 days, from October 24, 2007, to January 18, 2009, and the non-overlapping period of reduction is four (4) days.

Likewise Applicant filed an IDS on January 3, 2008, after the mailing of a Notice of Allowance on October 3, 2007. Pursuant to 37 CFR 1.704(c)(10), a reduction of 20 days beginning on the date the IDS was filed, January 3, 2008, and ending on the mailing date of the Office action in response to the IDS was mailed, January 22, 2008, is appropriate. However, the period of reduction overlaps with a reduction of 91 days pursuant to 37 CFR 1.704(c)(10) as iterated *supra*.

The Office will *sua sponte* issue a certificate of correction. Pursuant to 37 CFR 1.322, the Office will not issue a certificate of correction without first providing assignee or patentee an opportunity to be heard. Accordingly, patentees are given **one (1) month or thirty (30) days**, whichever is longer, from the mail date of this decision to respond. No extensions of time will be granted under § 1.136.

Nothing in this decision shall be construed as a waiver of the requirement of 35 U.S.C. 154(b)(4) that any civil action by an applicant dissatisfied with a determination made by the Director under 35 U.S.C. 154(b)(3) be filed in the United States District Court for the District of Columbia within 180 days after the grant of the patent.

The Office acknowledges submission of the $200.00 fee set forth in 37 CFR 1.18(e). No additional fees are required.

A review of the Power of Attorney filed on January 13, 2010 reveals that the Power of Attorney, executed by Richard Stevens, Associate Director, IP Management Group, is not executed by a person with apparent authority to act in the application, nor is there a statement under 37 CFR 3.73(b) authorizing Richard Stevens to act on behalf of the assignee. The MPEP 432(V)(A) provides: "An officer (chief executive officer, president, vice-president, secretary, or treasurer) is

presumed to have authority to sign on behalf of the organization. The signature of the chairman of the board of directors is acceptable, but not the signature of an individual director." The MPEP 432(V)(B) provides that "[t]he submission may be signed by any person, if the submission sets forth that the person signing is authorized (or empowered) to act on behalf of the assignee, i.e., to sign the submission on behalf of the assignee. 37 CFR 3.73(b)(2)(i). However, the statement under 37 CFR 3.73(b) states that Janice Kugler DeYoung is authorized to act on behalf of the assignee, and the Power of Attorney is not executed by Janice Kugler DeYoung.

Before the POA may be entered, evidence of the authority of the person signing the POA, or a properly signed POA, is required. A change of address should be filed in this case in accordance with MPEP 601.03. A courtesy copy of this decision is being mailed to the address noted on the petition. However, until otherwise instructed, all future correspondence regarding this application will be mailed solely to the address of record.

Applicant is advised that, in patented files: requests for changes of correspondence address, powers of attorney, revocations of powers of attorney, withdrawal of attorney and submissions under 37 CFR 1.501: Designation of, or changes to, a fee address, should be addressed to Mail Stop M Correspondence.

The application is being forwarded to the Certificates of Branch for issuance of a certificate of correction. The Office will issue a certificate of correction indicating that the term of the above-identified patent is extended or adjusted by seven hundred sixteen (**712**) days (Office adjustments of 1149 days (647 days + 502 days) reduced by Applicant delays of 437 days (32 days + 4 days + 10 days + 222 days + 4 days + 15 days + 61 days + 67 days + 22 days).

Telephone inquiries specific to this matter should be directed to the undersigned at (571) 272-3232.

/DLW/

Derek L. Woods
Attorney
Office of Petitions

Enclosure: Copy of DRAFT Certificate of Correction

CC: FISH & RICHARDSON PC
P.O. BOX 1022
MINNEAPOLIS, MN 55440-1022

UNITED STATES PATENT AND TRADEMARK OFFICE

# CERTIFICATE OF CORRECTION

PATENT : 7,670,769 B2

DATED : **March 2, 2010**

INVENTOR(S) : Lee

It is certified that error appears in the above-identified patent and that said Letters Patent is hereby corrected as shown below:

On the cover page,

[*] Notice: Subject to any disclaimer, the term of this patent is extended or adjusted under 35 USC 154(b) by 864 days.

Delete the phrase "by 864 days" and insert – by 712 days--

UNITED STATES PATENT AND TRADEMARK OFFICE

Commissioner for Patents
United States Patent and Trademark Office
P.O. Box 1450
Alexandria, VA 22313-1450
www.uspto.gov

MAILED
SEP 27 2011
OFFICE OF PETITIONS

FOLEY & LARDNER LLP
150 EAST GILMAN STREET
P.O. BOX 1497
MADISON WI 53701-1497

In re Application
Neil E. Lofgren et al.
Application No. 10/435,612
Filed: May 8, 2003
Attorney Docket No. 098888-1790

: DECISION ON APPLICATION
: FOR PATENT TERM ADJUSTMENT

This is in response to the REQUEST FOR RECONSIDERATION OF PATENT TERM ADJUSTMENT FOR PATENT APPLICATION UNDER 37 C.F.R. §1.705(b) filed September 23, 2011. Applicant requests that the determination of patent term adjustment be corrected from 1998 to 2655 days. Applicant requests this correction in part on the basis that the Office will take in excess of three years to issue this patent and is considered in light of the recent court decision in light of the Court of Appeals for the Federal Circuit's decision in *Wyeth v. Kappos*, 2009-1120 (Fed. Cir. 1-7-2010).

As the instant application for patent term adjustment requests reconsideration of the patent term adjustment as it relates to the Office's failure to issue the patent within three years of the filing date, the application for patent term adjustment under 37 CFR 1.705(b) is **DISMISSED as PREMATURE**.

Knowledge of the actual date the patent issues is required to calculate the amount, if any, of additional patent term patentees are entitled to for Office failure to issue the patent within three years. See 37 CFR 1.702(b). (This is true even where a request for continued examination (RCE) was filed). The computer will not undertake the § 1.702(b) calculation until the actual date of issuance of the patent has been determined. Likewise, the computer will not calculate any further Office delay under 37 CFR 1.702(a)(4) or applicant delay under 37 CFR 1.704(c)(10) until the actual date of issuance of the patent has been determined. As such, the Office cannot make a determination on the patent term adjustment relating to those provisions until the patent has issued.

Requesting reconsideration of the patent term adjustment to be indicated on the patent under 37 CFR 1.705(b) based on the initial determination of patent term adjustment and a projected issuance date of the patent (or even the filing date of the request for continued examination) is premature. Accordingly, it is appropriate to dismiss such a request as premature.

Rather than file an application for patent term adjustment under 37 CFR 1.705(b) contesting the 37 CFR 1.702(b) calculation at the time of the mailing of the notice of allowance, applicants are advised that they may wait until the time of the issuance of the patent and file a request for reconsideration of the patent term adjustment pursuant to 37 CFR 1.705(d). As the USPTO does not calculate the amount of time earned pursuant to 37 CFR 1.702(b) until the time of the issuance of the patent, the Office will consider any request for reconsideration of the patent term adjustment due to an error in the calculation of 37 CFR 1.702(b) to be timely if the request for reconsideration is filed within two months of the issuance of the patent. However, as to all other bases for contesting the initial determination of patent term adjustment received with the notice of allowance, applicants must timely file an application for patent term adjustment prior to the payment of the issue fee.[1]

The Office acknowledges submission of the $200.00 fee set forth in 37 CFR 1.18(e) for consideration of the application for patent term adjustment under 37 CFR 1.705(b).

Any request for reconsideration of the patent term adjustment indicated on the patent must be timely filed within two months after issuance pursuant to 37 CFR 1.705(d) and must include payment of the required fee under 37 CFR 1.18(e).

The Office of Data Management has been advised of this decision. This application is being referred to the Office of Data Management for issuance of the patent.

Telephone inquiries specific to this decision should be directed to the undersigned at (571) 272-3212.

Patricia Faison-Ball

Patricia Faison-Ball
Senior Petitions Attorney
Office of Petitions

---

[1] For example, if applicants dispute both the calculation of patent term adjustment under 37 CFR 1.702(a)(1) for Office failure to mail a first Office action or notice of allowance not later than fourteen months after the date on which the application was filed, and under 37 CFR 1.702(b) for Office failure to issue a patent within three years of the actual filing date of the application, then applicants must still timely file an application for patent term adjustment prior to the payment of the issue fee to contest the calculation of Office delay in issuing a first Office action or notice of allowance. See 37 CFR 1.705(b) and 35 U.S.C. 154(b)(3)(B). A dispute as to the calculation of the § 1.702(a)(1) period raised on request for reconsideration of patent term adjustment under 37 CFR 1.705(d) will be dismissed as untimely filed.

UNITED STATES PATENT AND TRADEMARK OFFICE

Commissioner for Patents
United States Patent and Trademark Office
P.O. Box 1450
Alexandria, VA 22313-1450
www.uspto.gov

**JACOBSON HOLMAN PLLC**
**400 SEVENTH STREET N.W.**
**SUITE 600**
**WASHINGTON, DC 20004**

**MAILED**
JUL 05 2011
**OFFICE OF PETITIONS**

| | | |
|---|---|---|
| In re Patent No. 7,179,455 | : | |
| Issue Date: February 20, 2007 | : | |
| Application No. 10/435,668 | : | ON PETITION |
| Filed: May 12, 2003 | : | |
| Attorney Docket No. P66309US1 | : | |

This is a decision in response to a petition filed June 8, 2011, under 37 CFR 1.378(c), to accept the unintentionally delayed payment of a maintenance fee for the above-identified patent.

The petition is **GRANTED**.

This patent expired on February 21, 2011, for failure to pay the 3 ½ year maintenance fee. Since this petition was submitted within twenty-four months after the six-month grace period provided in 37 CFR 1.362(e), the petition was timely filed under the provisions of 37 CFR 1.378(c).

The maintenance fee is hereby accepted and the above-identified patent is reinstated as of the mail date of this decision.

Telephone inquiries concerning this decision should be directed to the undersigned at (571) 272-6059.

A. Kelley-Collier

Alicia Kelley-Collier
Petitions Examiner
Office of Petitions

UNITED STATES PATENT AND TRADEMARK OFFICE

Commissioner for Patents
United States Patent and Trademark Office
P.O. Box 1450
Alexandria, VA 22313-1450
www.uspto.gov

MAILED
AUG 12 2011
OFFICE OF PETITIONS

LAW OFFICE OF MICHAEL D. EISENBERG
INTELLECTUAL PROPERTY LAW
3258 CAMINITO EASTBLUFF
SUITE 89
SAN DIEGO, CA 92037

In re Application of
Shek Hung Lok, et al
Application No. 10/435,686
Filed: May 9, 2003
Attorney Docket No.: AIP-P029

ON PETITION

This is a decision in response to the petition, filed August 1, 2011, to revive the above-identified application under the provisions of 37 CFR 1.137(b).

The petition is **GRANTED**.

The application became abandoned for failure to reply in a timely manner to the non-final Office action mailed December 23, 2010, which set a shortened statutory period for reply of three (3) months. A Notice of Abandonment was subsequently mailed on July 8, 2011. On August 1, 2011, the present petition was filed.

The petition satisfies the conditions for revival pursuant to the provisions of 37 CFR 1.137(b) in that petitioner has supplied (1) a reply in the form of an amendment; (2) the petition fee of $810; and (3) an adequate statement of unintentional delay.

The application is being referred to Technology Center AU 2453 for appropriate action by the Examiner in the normal course of business on the response filed June 28, 2011.

Telephone inquiries concerning this decision should be directed to the undersigned at (571) 272-3204. Inquiries relating to further prosecution should be directed to the Technology Center.

/SDB/

Sherry D. Brinkley
Petitions Examiner
Office of Petitions

UNITED STATES PATENT AND TRADEMARK OFFICE

Commissioner for Patents
United States Patent and Trademark Office
P.O. Box 1450
Alexandria, VA 22313-1450
www.uspto.gov

FISH & RICHARDSON PC
PO BOX 1022
MINNEAPOLIS MN 55440-1022

MAILED
JUN 21 2011
OFFICE OF PETITIONS

| | | |
|---|---|---|
| In re Application<br>Hwu, et al.<br>Application No. 10/435,717<br>Filed: May 8, 2003<br>Attorney Docket No. 08919-0086001 | :<br>:<br>:<br>:<br>: | DECISION ON PATENT TERM ADJUSTMENT |

This is a decision on the "APPLICATION FOR PATENT TERM ADJUSTMENT UNDER 37 C.F.R. § 1.705(b)," filed May 23, 2011, requesting correction of the initial determination of patent term adjustment (PTA) from one thousand three hundred seventy-nine (1379) days to one thousand four hundred sixty-nine (1469) days.

The application for patent term adjustment is **GRANTED**.

The Office has updated the PAIR screen to reflect that the correct Patent Term Adjustment (PTA) determination at the time of the mailing of the Notice of Allowance is **one thousand four hundred sixty-nine (1469) days**. A copy of the updated PAIR screen, showing the correct determination, is enclosed.

On March 3, 2011, the Office mailed the Determination of Patent Term Adjustment under 35 U.S.C. 154(b) in the above identified application. The Notice stated that the patent term adjustment (PTA) to date is one thousand three hundred seventy-nine (1379) days. On May 23, 2011, Applicants timely[1] submitted the instant application for patent term adjustment, asserting that the correct number of days of PTA at the time of the mailing of the Notice of Allowance is one thousand four hundred sixty-nine (1469) days.

---

[1] Applicants filed the application for patent term adjustment together with the payment of the issue fee.

Applicants state that the patent issuing from the application is not subject to a terminal disclaimer.

The Office initially determined a patent term adjustment of one thousand three hundred seventy-nine (1379) days based on an adjustment for PTO delay of one thousand four hundred fifty-four (1454) days pursuant to 37 C.F.R. § 1.703(a)(1), and ninety-nine (99) days pursuant to 37 C.F.R. § 1.703(a)(3), reduced by Applicants' delays of thirty-three (33), sixty-two (62), and twelve (12) days pursuant to 37 C.F.R. § 1.704(b), and ninety (90) days pursuant to 37 C.F.R. § 1.704(c)(8). The adjustment of 90 days is at issue.

Applicants assert entitlement to a patent term adjustment of one thousand four hundred sixty-nine (1469) days on the basis that the PTO improperly assessed Applicants a delay of ninety (90) days for filing a Supplemental Amendment on March 1, 2010, after Applicants had filed an Amendment on December 1, 2009.

A review of the application file reveals that the Supplemental Amendment filed on March 1, 2010 contained language stating that it was being filed in response to a request from the Examiner.

In view of the above, it is concluded that no applicant delay should have been assessed for the March 1, 2010 Amendment.

Accordingly, the correct determination of PTA at the time of mailing of the Notice of Allowance is **one thousand four hundred sixty-nine (1469) days** (1576 (1454+122) days of PTO delay, reduced by 127 (33+62+12) days of applicant delay).

Receipt of the $200 fee is acknowledged.

The application file is being forwarded to the Office of Data Management for processing into a patent.

Telephone inquiries specific to this matter should be directed to Cliff Congo, Petitions Attorney, at (571)272-3207.

Anthony Knight
Director
Office of Petitions

Enc: updated PAIR screen

# Patent Term Adjustments

PTA/PTE Information | Patent Term Adjustment | Patent Term Extension

Application Number*: 10435717 Search  Explanation of PTA Calculation  Explanation of PTE Calculation

## PTA Calculations for Application: 10435717

| | | | |
|---|---|---|---|
| Application Filing Date | 05/08/2003 | OverLapping Days Between (A and B) or (A and C) | 0 |
| Issue Date of Patent | | Non-Overlapping USPTO Delays: | 1576 |
| A Delays | 1576 | PTO Manual Adjustment | 90 |
| B Delays | 0 | Applicant Delay (APPL) | 197 |
| C Delays | 0 | Total PTA (days) | 1469 |

* - Sorted Column

## File Contents History

| Action Number | Action Recorded Date | Action Due Date | Action Code | Action Description | Duration PTO | Duration APPL | Parent Action Number |
|---|---|---|---|---|---|---|---|
| 85 | 06/10/2011 | | P028 | Adjustment of PTA Calculation by PTO | 90 | | 0 |
| 76 | 03/03/2011 | 11/01/2010 | MN/=. | Mail Notice of Allowance | 122 | | 66 |
| 75 | 02/28/2011 | | IREV | Issue Revision Completed | | | 0 |
| 74 | 11/26/2010 | | ACRE | Allowed Case Returned to the Examiner for Clerical Processing | | | 0 |
| 73 | 11/26/2010 | | DVER | Document Verification | | | 0 |
| 72 | 11/26/2010 | | N/=. | Notice of Allowance Data Verification Completed | | | 0 |
| 71 | 11/22/2010 | | CNTA | Allowability Notice | | | 0 |
| 68 | 07/07/2010 | | FWDX | Date Forwarded to Examiner | | | 0 |
| 65 | 07/07/2010 | | ABN9 | Disposal for a RCE / CPA / R129 | | | 0 |
| 67 | 07/01/2010 | | AMPR | RCE- AF Processed | | | 0 |
| 66 | 07/01/2010 | 06/19/2010 | RCEX | Request for Continued Examination (RCE) | | 12 | 60 |
| 64 | 07/01/2010 | | BRCE | Workflow - Request for RCE - Begin | | | 0 |
| 63 | 07/01/2010 | | FWDX | Date Forwarded to Examiner | | | 0 |
| 62 | 06/29/2010 | | A.NE | Amendment after Final Rejection | | | 0 |
| 61 | 06/29/2010 | | XT/G | Request for Extension of Time - Granted | | | 0 |
| 58 | 03/25/2010 | | DVER | Document Verification | | | 0 |
| 57 | 03/25/2010 | | FWDX | Date Forwarded to Examiner | | | 0 |
| 60 | 03/19/2010 | | MCTFR | Mail Final Rejection (PTOL - 326) | | | 0 |
| 59 | 03/15/2010 | | CTFR | Final Rejection | | | 0 |
| 56 | 03/01/2010 | 12/01/2009 | SA.. | Supplemental Response | | 90 | 47 |
| 51 | 01/29/2010 | | EML_NTR | Email Notification | | | 0 |
| 50 | 01/29/2010 | | MEXIN | Mail Examiner Interview Summary (PTOL - 413) | | | 0 |
| 49 | 01/20/2010 | | EXIN | Examiner Interview Summary Record (PTOL - 413) | | | 0 |
| 48 | 12/06/2009 | | FWDX | Date Forwarded to Examiner | | | 0 |
| 47 | 12/01/2009 | | A... | Response after Non-Final Action | | | 0 |
| 46 | 09/01/2009 | | ELC_RVW | Electronic Review | | | 0 |
| 45 | 09/01/2009 | | EML_NTF | Email Notification | | | 0 |
| 44 | 09/01/2009 | | MCTNF | Mail Non-Final Rejection | | | 0 |
| 43 | 08/28/2009 | | CTNF | Non-Final Rejection | | | 0 |
| 42 | 06/17/2009 | | FWDX | Date Forwarded to Examiner | | | 0 |
| 40 | 06/17/2009 | | FWDX | Date Forwarded to Examiner | | | 0 |
| 38 | 06/17/2009 | | ABN9 | Disposal for a RCE / CPA / R129 | | | 0 |
| 41 | 06/15/2009 | | AMS8 | Amendment Submitted/Entered with Filing of CPA/RCE | | | 0 |
| 39 | 06/15/2009 | 04/14/2009 | RCEX | Request for Continued Examination (RCE) | | 62 | 34 |
| 37 | 06/15/2009 | | BRCE | Workflow - Request for RCE - Begin | | | 0 |
| 36 | 01/14/2009 | | ELC_RVW | Electronic Review | | | 0 |
| 35 | 01/14/2009 | | EML_NTF | Email Notification | | | 0 |
| 34 | 01/14/2009 | | MCTFR | Mail Final Rejection (PTOL - 326) | | | 0 |
| 33 | 01/12/2009 | | CTFR | Final Rejection | | | 0 |
| 32 | 11/13/2008 | | FWDX | Date Forwarded to Examiner | | | 0 |
| 31 | 11/03/2008 | 10/01/2008 | A... | Response after Non-Final Action | | 33 | 29 |
| 30 | 11/03/2008 | | XT/G | Request for Extension of Time - Granted | | | 0 |
| 29 | 07/01/2008 | 07/08/2004 | MCTNF | Mail Non-Final Rejection | 1454 | | 0.5 |
| 28 | 06/23/2008 | | CTNF | Non-Final Rejection | | | 0 |
| 26 | 10/17/2007 | | W525 | Withdraw Flagged for 5/25 | | | 0 |
| 25 | 10/15/2007 | | F525 | Flagged for 5/25 | | | 0 |
| 24 | 07/09/2007 | | C.AD | Correspondence Address Change | | | 0 |
| 23 | 05/18/2007 | | C.ADB | Correspondence Address Change | | | 0 |
| 22 | 10/05/2006 | | DOCK | Case Docketed to Examiner in GAU | | | 0 |
| 21 | 09/29/2006 | | DOCK | Case Docketed to Examiner in GAU | | | 0 |
| 20 | 04/20/2006 | | DOCK | Case Docketed to Examiner in GAU | | | 0 |
| 19 | 02/10/2006 | | C614 | New or Additional Drawing Filed | | | 0 |
| 18 | 02/10/2006 | | LTDR | Incoming Letter Pertaining to the Drawings | | | 0 |
| 17 | 01/30/2006 | | DOCK | Case Docketed to Examiner in GAU | | | 0 |
| 16 | 07/21/2005 | | DOCK | Case Docketed to Examiner in GAU | | | 0 |
| 15 | 01/05/2005 | | DOCK | Case Docketed to Examiner in GAU | | | 0 |
| 14 | 12/13/2004 | | TSSCOMP | IFW TSS Processing by Tech Center Complete | | | 0 |
| 11 | 12/13/2004 | | DOCK | Case Docketed to Examiner in GAU | | | 0 |
| 10 | 02/02/2004 | | TI1050 | Transfer Inquiry to GAU | | | 0 |
| 9 | 11/07/2003 | | OIPE | Application Dispatched from OIPE | | | 0 |
| 8 | 11/07/2003 | | COMP | Application Is Now Complete | | | 0 |
| 7 | 09/24/2003 | | FLFEE | Payment of additional filing fee/Preexam | | | 0 |
| 6 | 09/24/2003 | | OATHDECL | A statement by one or more inventors satisfying the requirement under 35 USC 115, Oath of the Applic | | | 0 |
| 5 | 07/22/2003 | | INCD | Notice Mailed--Application Incomplete--Filing Date Assigned | | | 0 |
| 4 | 06/04/2003 | | L128 | Cleared by LAR (LARS) | | | 0 |
| 3 | 05/30/2003 | | SCAN | IFW Scan & PACR Auto Security Review | | | 0 |
| 2 | 05/27/2003 | | SCAN | IFW Scan & PACR Auto Security Review | | | 0 |
| 27 | 05/08/2003 | | IDSC | Information Disclosure Statement considered | | | 0 |
| 13 | 05/08/2003 | | RCAP | Reference capture on IDS | | | 0 |
| 12.7 | 05/08/2003 | | M844 | Information Disclosure Statement (IDS) Filed | | | 0 |
| 12 | 05/08/2003 | | WIDS | Information Disclosure Statement (IDS) Filed | | | 0 |
| 1 | 05/08/2003 | | IEXX | Initial Exam Team nn | | | 0 |
| 0.5 | 05/08/2003 | | EFILE | Filing date | | | 0 |

Export to: Excel

UNITED STATES PATENT AND TRADEMARK OFFICE

Commissioner for Patents
United States Patent and Trademark Office
P.O. Box 1450
Alexandria, VA 22313-1450
www.uspto.gov

NUTTER MCCLENNEN & FISH LLP
SEAPORT WEST
155 SEAPORT BOULEVARD
BOSTON, MA 02210-2604

**MAILED**

**MAR 17 2011**

**OFFICE OF PETITIONS**

In re Application of
Gregory R. Whittaker et al
Application No. 10/436,018
Filed: May 12, 2003
Attorney Docket No. 22956-711
(MIT253USNP)

DECISION DISMISSING PETITION
UNDER 37 CFR 1.78(a)(3)

This is a decision on the petition filed September 29, 2010, which is being treated as a petition under 37 CFR 1.78(a)(3), to accept an unintentionally delayed claim under 35 U.S.C. §120 for the benefit of priority to prior-filed nonprovisional Application Nos. 09/655,271, filed September 5, 2000; 09/014,937 filed January 28, 1998 and 08/783,627 filed January 14, 1997.

The petition is **DISMISSED**.

A petition for acceptance of a claim for late priority under 37 CFR 1.78(a)(3) is only applicable to those applications filed on or after November 29, 2000 and after the expiration of the period specified in 37 CFR 1.78(a)(2)(ii). In addition, the petition under 37 CFR 1.78(a)(3) must be accompanied by:

**(1)** the reference required by 35 U.S.C. § 120 and 37 CFR 1.78(a)(2)(i) of the prior-filed application, unless previously submitted;
**(2)** the surcharge set forth in § 1.17(t); and
**(3)** a statement that the entire delay between the date the claim was due under 37 CFR 1.78(a)(2)(ii) and the date the claim was filed was unintentional. The Director may require additional information where there is a question whether the delay was unintentional.

On filing, the present application claimed benefit of priority to nonprovisional Application No. 10/404,685, filed April 1, 2003. The present amendment seeks to claim benefit of priority to nonprovisional Application Nos. 09/655,271, filed September 5, 2000; 09/014,937 filed January 28, 1998, and 08/783,627, filed January 14, 1997. The amendment to claim benefit of priority to nonprovisional Application No. 08/783,627 is improper in this application as it lacks the proper

chain of priority. In this regard, while Application No. 10/404,685 has a proper chain of benefit of priority to Application Nos. 09/655,271 and 09/014,937 there is no like chain of benefit of priority to nonprovisional Application No. 08/783,627.

Where an application claims a benefit under 35 U.S.C. 120 of a chain of applications, the application must make a reference to the first (earliest) application and every intermediate application. *See* Sampson v. Ampex Corp., 463 F.2d 1042, 1044 45, 174 USPQ 417, 418 19 (2d Cir. 1972); Sticker Indus. Supply Corp. v. Blaw Knox Co., 405 F.2d 90, 93, 160 USPQ 177, 179 (7th Cir. 1968); Hovlid v. Asari, 305 F.2d 747, 751, 134 USPQ 162, 165 (9th Cir. 1962). *See also* MPEP § 201.11. In addition, every intermediate application must also make a reference to the first (earliest) application and every application after the first application and before such intermediate application. MPEP Section 201.06(d).

In view of the above, petitioner must first correct the claim for benefit of priority to Application No. 08/783,627 if petitioner wishes to claim priority of that application in the present application. Any request for reconsideration of this decision on petition should be accompanied by a renewed petition under 37 CFR 1.78(a)(3).

Further correspondence with respect to this matter should be addressed as follows:

By mail: Mail Stop PETITIONS
Commissioner for Patents
Post Office Box 1450
Alexandria, VA 22313-1450

By hand: Customer Service Window
Mail Stop Petitions
Randolph Building
401 Dulany Street
Alexandria, VA 22314

By fax: (571) 273-8300
ATTN: Office of Petitions

Any questions concerning this matter may be directed to Irvin Dingle at (571) 272-3210.

David Bucci
Petition Examiner
Office of Petitions

UNITED STATES PATENT AND TRADEMARK OFFICE

Commissioner for Patents
United States Patent and Trademark Office
P.O. Box 1450
Alexandria, VA 22313-1450
www.uspto.gov

**MAILED**

MAR 25 2011

**OFFICE OF PETITIONS**

BROWN RUDNICK LLP
ONE FINANCIAL CENTER
BOSTON MA 02111

| | | |
|---|---|---|
| In re Patent of Mon | : | |
| Patent No. 7,837,720 | : | ON APPLICATION FOR |
| Issued: November 23, 2010 | : | PATENT TERM ADJUSTMENT |
| Application No. 10/436,500 | : | AND NOTICE OF INTENT TO |
| Filed: May 13, 2003 | : | ISSUE CERTIFICATE OF |
| Docket No. BSCU-170/02US (28748/81) | : | CORRECTION |

This is in response to the REQUEST FOR RECONSIDERATION OF PATENT TERM INDICATED UNDER 37 C.F.R. § 1.705(d)," filed January 18, 2011. Patentee requests that the patent term adjustment indicated on the above-identified patent be corrected to indicate that the term of the above-identified patent is extended or adjusted by five hundred ninety (590) days.

The petition is **GRANTED to the extent indicated herein.**

On September 7, 2010, the above-identified application matured into U.S. Patent No7,837,720. The instant request for reconsideration was timely filed within 2 months of the date the patent issued. See § 1.705(d). The Patent issued with a revised Patent Term Adjustment of 575 days.

A review of the patent term adjustment calculations for the above-identified application reveals two additional grounds for adjustment pursuant to 37 CFR 1.702(a)(2).

37 CFR 1.702(a) provides, in pertinent part, that grounds for adjustment of patent term due to examination delay include failure of the Office to

> (2) Respond to a reply under 35 U.S.C. 132 or to an appeal taken under 35 U.S.C. 134 not later than four months after the date on which the reply was filed or the appeal was taken;

Pursuant to 37 CFR 1.703(a), the periods are calculated as follows:

> (2) The number of days, if any, in the period beginning on the day after the date that is four months after the date a reply under § 1.111 was filed and ending on the date of mailing of either an action under 35 U.S.C. 132, or a notice of allowance under 35 U.S.C. 151, whichever occurs first;
>
> (4) The number of days, if any, in the period beginning on the day after the date that is four months after the date an appeal brief in compliance with § 41.37 of this title was filed and ending on the date of mailing of any of an examiner's answer under § 41.39 of this title, an action under 35 U.S.C. 132, or a notice of allowance under 35 U.S.C. 151, whichever occurs first;

On January 5, 2007 applicant filed a Notice of Appeal. On March 5, 2007, applicant filed an Appeal Brief. The Office mailed a non-final Office action in response on July 17, 2007.

A period of adjustment of 12 days, beginning on July 6, 2007, the date after the date that is 4 months after the Appeal brief was filed, and ending on July 17, 2007, the date the non-final Office action was mailed, is being entered.

After applicant filed a reply on November 19, 2007, the Office mailed a final rejection on April 8, 2008. A period of adjustment of 20 days, beginning on March 20, 2008, the date after the date that is 4 months after the reply was filed, and ending on April 8, 2008, the date the final Office action was mailed, is being entered.

In calculating the period of delay under 35 U.S.C. § 154(b)(1)(B) ("B Delay"), patentee indicates the period of delay is 637 days.

However, per 35 U.S.C. § 154(b)(1)(B)(i), B Delay does not include "any time consumed by continued examination of the application requested by the applicant under section 132(b)." Per the language of 37 CFR 1.703(b)(1):

> (b) The period of adjustment under § 1.702(b) is the number of days, if any, in the period beginning on the

day after the date that is three years after the date on which the application was filed under 35 U.S.C. 111(a) or the national stage commenced under 35 U.S.C. 371(b) or (f) in an international application and ending on the date a patent was issued, but not including the sum of the following periods:

(1) The number of days, if any, in the period beginning on the date on which a request for continued examination of the application under 35 U.S.C. 132(b) was filed and ending on the date the patent was issued;

As stated above, the date on which a RCE was filed is not included in the B Delay period. The maximum B Delay in this case is 862 days, which is the number of days beginning on May 14, 2006, the day after the date three years after the application's filing date, and ending on September 21, 2008, the day *before* the date the RCE was filed.

As stated in 35 U.S.C. 154(b)(1)(B)(ii), B delay does not include "any time consumed by appellate review by the Board of Patent Appeals and Interferences." The period of B delay does not include the 194 day period beginning on January 5, 2007, the date the Notice of Appeal was filed, and ending on July 17, 2007, the date the Office mailed a non-final Office action and reopened prosecution. Excluding the 194 days consumed by appellate review and removing the 32 day period of overlap (See the new adjustments discussed above) results in a period of B delay of 636 days (862-194-32).

Patentee disputes the reduction of 15 days in connection with the filing of an amendment on September 30, 2010, after a Notice of Allowance was mailed on July 9, 2010. Patentee contends that applicant did not engage in behavior that reasonably would be considered as failing in efforts to conclude prosecution of the application by filing the September 30, 2010 amendment under 37 CFR 1.312 because the amendment was expressly requested by the examiner.

The reduction has been considered and the reduction is found to be warranted. It is undisputed that an amendment was filed on September 30, 2010, after the mailing of the Notice of Allowance. This was properly a basis for reduction of patent term adjustment pursuant to § 1.704(c)(10). 37 CFR 1.704(c))(8) provides that a supplemental paper expressly requested by the

examiner will not be grounds for reduction. However, 37 CFR 1.704(c)(8) is inapplicable to the situation at hand.

37 CFR § 1.704(c)(10) provides that:

> Submission of an amendment under § 1.312 or other paper after a notice of allowance has been given or mailed, in which case the period of adjustment set forth in § 1.703 shall be reduced by the lesser of:
>
> (i) The number of days, if any, beginning on the date the amendment under § 1.312 or other paper was filed and ending on the mailing date of the Office action or notice in response to the amendment under § 1.312 or such other paper;
>
> or
>
> (ii) Four months;

As stated in MPEP 2732:

> 37 CFR 1.704(c)(10) establishes submission of an amendment under 37 CFR 1.312 or other paper after a notice of allowance has been given or mailed as a circumstance that constitutes a failure of an applicant to engage in reasonable efforts to conclude processing or examination of an application. The submission of amendments (or other papers) after an application is allowed may cause substantial interference with the patent issue process.
>
> Certain papers filed after allowance are not considered to be a failure to engage in reasonable efforts to conclude processing or examination of an application. See *Clarification of 37 CFR 1.704(c)(10) - Reduction of Patent Term Adjustment for Certain Types of Papers Filed After a Notice of Allowance has been Mailed*, 1247 Off. Gaz. Pat. Office 111 (June 26, 2001). The submission of the following papers after a "Notice of Allowance" is not considered a failure to engage in reasonable efforts to conclude processing or examination of an application: (1) Fee(s) Transmittal (PTOL-85B); (2) Power of Attorney; (3) Power to Inspect; (4) Change of Address; (5) Change of Status (small/not small entity status); (6) a response to the examiner's reasons for allowance or a request to correct an error or omission in the "Notice of Allowance" or

"Notice of Allowability;" and (7) letters related to government interests (e.g., those between NASA and the Office). Papers that will be considered a failure to engage in reasonable efforts to conclude processing or examination of an application include: (1) a request for a refund; (2) a status letter; (3) amendments under 37 CFR 1.312; (4) late priority claims; (5) a certified copy of a priority document; (6) drawings; (7) letters related to biologic deposits; and (8) oaths or declarations.

Patentee's attention is drawn to the fact that an amendment under 37 CFR 1.312 **is** a paper that will be considered a failure to engage in reasonable efforts to conclude processing or examination of an application. There is no "expressly requested by the examiner" exemption in 37 CFR 1.704(c)(10).

Accordingly, the Office properly entered a 15 day reduction, counting the number of days in the period beginning on the date the amendment under 37 CFR 1.312 was filed, September 30, 2010, and ending on October 14, 2010, a response to the amendment was mailed.

A review of the patent term adjustment calculations has revealed that the Office was in error when it entered a three (3) day reduction for the delay in payment of the issue fee. The period begins on October 10, 2010, the date after three months after the Notice of Allowance was mailed, and ends on October 12, 2010, the date the issue fee was paid. No reduction should have been entered because this reduction is subsumed within the 15 day reduction for the September 30, 2010 amendment under 37 CFR 1.312 (September 30, 2010 to October 14, 2010). Therefore, the three (3) day period of reduction is being removed.

The patent term adjustment is five hundred seventy-seven (577) days, which is the sum of 244 (212+12+20) days of delay under 35 U.S.C. § 154(b)(1)(A) ("A Delay") and 862 days of maximum B Delay, reduced by 194 days excluded appellate period, reduced by 32 days of overlapping A Delay and B Delay, and reduced by 303 (1+29+33+85+76+9+33+22+15) days for Applicant delay.

The Office will *sua sponte* issue a certificate of correction. Pursuant to 37 CFR 1.322, the Office will not issue a certificate of correction without first providing assignee or patentee an opportunity to be heard. Accordingly, patentee is given **one (1) month or thirty (30) days**, whichever is longer, from the mail date of this decision to respond. No extensions of time will be granted under § 1.136.

Nothing in this decision shall be construed as a waiver of the requirement of 35 U.S.C. 154(b)(4) that any civil action by an applicant dissatisfied with a determination made by the Director under 35 U.S.C. 154(b)(3) be filed in the United States District Court for the District of Columbia within 180 days after the grant of the patent.

The Office acknowledges submission of the $200.00 fee set forth in 37 CFR 1.18(e). No additional fees are required.

The application is being forwarded to the Certificates of Branch for issuance of a certificate of correction. The Office will issue a certificate of correction indicating that the term of the above-identified patent is extended or adjusted by **five hundred seventy-seven (577)** days.

Telephone inquiries specific to this matter should be directed to the undersigned at (571) 272-3230.

Shirene Willis Brantley
Senior Petitions Attorney
Office of Petitions

Enclosure: Draft Certificate of Correction

UNITED STATES PATENT AND TRADEMARK OFFICE

# CERTIFICATE OF CORRECTION

PATENT : 7,837,720 B2

DATED : **November 23, 2010** **DRAFT**

INVENTOR(S) : Mon

It is certified that error appears in the above-identified patent and that said Letters Patent is hereby corrected as shown below:

On the cover page,

[*] Notice: Subject to any disclaimer, the term of this patent is extended or adjusted under 35 U.SC. 154(b) by 575 days

Delete the phrase "by 575 days" and insert – by 577 days--

UNITED STATES PATENT AND TRADEMARK OFFICE

Commissioner for Patents
United States Patent and Trademark Office
P.O. Box 1450
Alexandria, VA 22313-1450
www.uspto.gov

MAILED
OCT 05 2011
OFFICE OF PETITIONS

ANDREW F. SAYKO JR.
P.O. BOX 6339
SHALLOTTE, NC 28470

| | | |
|---|---|---|
| In re Patent No. 7,126,976 | : | |
| Issue Date: October 24, 2006 | : | |
| Application No. 10/436,530 | : | ON PETITION |
| Filed: May 14, 2003 | : | |
| Attorney Docket No.: WGS-2003-B7 | : | |

This is a decision on the petition, filed August 23, 2011, under 37 CFR 1.378(c) to accept the unintentionally delayed payment of a maintenance fee for the above-identified patent.

The petition is **GRANTED**.

This patent expired on October 24, 2010 for failure to pay the first maintenance fee. Since this petition was submitted within twenty-four months after the six-month grace period provided in 37 CFR 1.362(e), the petition was timely filed under the provisions of 37 CFR 1.378(c).

The 3 ½ year maintenance fee in this case is hereby accepted and the above-identified patent is reinstated as of the mail date of this decision.

It is noted that the address given on the petition differs from the address of record. If appropriate, a change of address should be filed in accordance with MPEP 601.03. Petitioner is reminded, however, that the mere filing of a change of correspondence address does not affect fee address. Therefore, if petitioner desires to receive future correspondence regarding any Maintenance Fee Reminder which may be mailed regarding maintenance fees for the above-identified patent, an appropriate "fee address" and/or "customer number" form should be submitted to the Maintenance Fee Division. A courtesy copy of this decision is being mailed to the address given on the petition.

It is also noted that petitioner submitted the maintenance fee required for the 7 ½ year of $1,240, rather than the requisite 3 ½ year fee of $490. Accordingly, the maintenance fee of $750 overpaid is being credited to counsel's credit card.

Telephone inquiries concerning this matter may be directed to the undersigned at (571) 272-3204.

/SDB/

Sherry D. Brinkley
Petitions Examiner
Office of Petitions

cc: ANDREW F. SAYKO, JR.
1014 CROOKED OAKS LANE
SEABROOK ISLAND, SC 29455

UNITED STATES PATENT AND TRADEMARK OFFICE

Commissioner for Patents
United States Patent and Trademark Office
P.O. Box 1450
Alexandria, VA 22313-1450
www.uspto.gov

**OFFICE OF COUNSEL CODE OC4**
**NAVAL SURFACE WARFARE CENTER**
**INDIAN HEAD DIVISION**
**101 STRAUSS AVE., BLDG. D-31**
**INDIAN HEAD MD 20640-5035**

**MAILED**

APR 14 2011

**OFFICE OF PETITIONS**

In re Patent No. 7,047,862 :
Issue Date: May 23, 2006 :
Application No. 10/436,603 : DECISION ON PETITION
Filed: May 09, 2003 :
Attorney Docket No. **84,496** :

This is a decision on the petition under 37 CFR 1.378(c), filed January 04, 2011, to accept the unintentionally delayed payment of a maintenance fee for the above-identified patent.

The petition is **GRANTED**.

This patent expired at midnight on May 23, 2010 for failure to pay the three and one-half year maintenance fee. Since this petition was submitted within twenty-four months after the six-month grace period provided in 37 CFR 1.362(e), the petition was timely filed under the provisions of 37 CFR 1.378(c).

The maintenance fee is hereby accepted and the above-identified patent is reinstated as of the mail date of this decision.

The file does not indicate a change of address has been submitted, although the address given on the petition differs from the address of record. If appropriate, a change of fee address (form PTO/SB/47) and a request for customer number (form PTO/SB/125) should be filed in accordance with Manual of Patent Examining Procedure, section 2540. A courtesy copy of this decision is being mailed to the address on the petition. However, the Office will mail all future correspondence solely to the address of record.

Telephone inquiries concerning this decision should be directed to Tredelle Jackson at (571) 272-2783.

Ramesh Krishnamurthy

Ramesh Krishnamurthy
Petitions Examiner
Office of Petitions

cc: **FREDRIC J. ZIMMERMAN**
**DEPARTMENT OF THE NAVY**
**OFFICE OF COUNSEL, BLDG. D-31**
**3824 STRAUSS AVE., SUITE 103**
**INDIAN HEAD MD 20640-5152**

UNITED STATES PATENT AND TRADEMARK OFFICE

Commissioner for Patents
United States Patent and Trademark Office
P.O. Box 1450
Alexandria, VA 22313-1450
www.uspto.gov

Wilmer Cutler Pickering Hale and Dorr, LLP
399 Park Avenue
New York, NY 10022

MAILED

OCT 19 2011

OFFICE OF PETITIONS

In re Patent No. 7,273,616 :
Issued: September 25, 2007 :
Application No.: 10/436,706 : NOTICE
Filed: May 12, 2003 :
Attorney Docket No: **5199-16** :

This is a notice regarding your request for acceptance of a fee deficiency submission under 37 CFR 1.28. On September 1, 1998, the Court of Appeals for the Federal Circuit held that 37 CFR 1.28(c) is the sole provision governing the time for correction of the erroneous payment of the issue fee as a small entity. **See DH Technology v. Synergystex International, Inc. 154 F.3d 1333, 47 USPQ2d 1865 (Fed. Cir. Sept. 1, 1998).**

The Office no longer investigates or rejects original or reissue applications under 37 CFR 1.56. **1098 Off. Gaz. Pat. Office 502 (January 3, 1989).** Therefore, nothing in this Notice is intended to imply that an investigation was done.

Your fee deficiency submission under 37 CFR 1.28 is hereby **ACCEPTED**.

This application is no longer entitled to small entity status. Accordingly, all future fees paid in this application must be paid at the large entity rate.

Inquiries related to this communication should be directed to the undersigned at (571) 272-3222.

/Kenya A. McLaughlin/

Kenya A. McLaughlin
Petitions Attorney
Office of Petitions

PTO/SB/66 (03-09)
Approved for use through 03/31/2012. OMB 0651-0016
U.S. Patent and Trademark Office: U.S. DEPARTMENT OF COMMERCE
Under the Paperwork Reduction Act of 1995, no persons are required to respond to a collection of information unless it displays valid OMB control number.

# PETITION TO ACCEPT UNINTENTIONALLY DELAYED PAYMENT OF MAINTENANCE FEE IN AN EXPIRED PATENT (37 CFR 1.378(c))

| Patent Number | Issue Date (YYYY-MM-DD) | Application Number | Filing Date (YYYY-MM-DD) | Docket Number (if applicable) |
|---|---|---|---|---|
| 7074490 | 2006-07-11 | 10436862 | 2003-05-13 | DC4981CIP |

CAUTION: Maintenance fee (and surcharge, if any) payment must correctly identify: (1) the patent number and (2) the application number of the actual U.S. application leading to issuance of that patent to ensure the fee(s) is/are associated with the correct patent. 37 CFR 1.366(c) and (d).

SMALL ENTITY
☐ Patentee claims, or has previously claimed, small entity status. See 37 CFR 1.27.

LOSS OF ENTITLEMENT TO SMALL ENTITY STATUS
☐ Patentee is no longer entitled to small entity status. See 37 CFR 1.27(g)

| NOT Small Entity | | | Small Entity | | |
|---|---|---|---|---|---|
| | Fee | Code | | Fee | Code |
| ◉ | 3 ½ year | (1551) | ◯ | 3 ½ year | (2551) |
| ◯ | 7 ½ year | (1552) | ◯ | 7 ½ year | (2552) |
| ◯ | 11 ½ year | (1553) | ◯ | 11 ½ year | (2553) |

SURCHARGE
The surcharge required by 37 CFR 1.20(i)(2) (Fee Code 1558) must be paid as a condition of accepting unintentionally delayed payment of the maintenance fee.

MAINTENANCE FEE (37 CFR 1.20(e)-(g))
The appropriate maintenance fee must be submitted with this petition.

STATEMENT
THE UNDERSIGNED CERTIFIES THAT THE DELAY IN PAYMENT OF THE MAINTENANCE FEE TO THIS PATENT WAS UNINTENTIONAL

PETITIONER(S) REQUEST THAT THE DELAYED PAYMENT OF THE MAINTENANCE FEE BE ACCEPTED AND THE PATENT REINSTATED

THIS PORTION MUST BE COMPLETED BY THE SIGNATORY OR SIGNATORIES

37 CFR 1.378(d) states: "Any petition under this section must be signed by an attorney or agent registered to practice before the Patent and Trademark Office, or by the patentee, the assignee, or other party in interest."

I certify, in accordance with 37 CFR 1.4(d)(4) that I am

◉ An attorney or agent registered to practice before the Patent and Trademark Office

◯ A sole patentee

◯ A joint patentee; I certify that I am authorized to sign this submission on behalf of all the other patentees.

◯ A joint patentee; all of whom are signing this e-petition

◯ The assignee of record of the entire interest

Under the Paperwork Reduction Act of 1995, no persons are required to respond to a collection of information unless it displays valid OMB control number.

| Patent Practitioner | | | |
|---|---|---|---|
| A signature of the applicant or representative is required in accordance with 37 CFR 1.33 and 10.18. Please see 37 CFR 1.4(d) for the form of the signature | | | |
| Signature | /catherine u brown/ | Date (YYYY-MM-DD) | 2010-08-25 |
| Name | Catherine U. Brown | Registration Number | 44565 |

This collection of information is required by 37 CFR 1.378(c). The information is required to obtain or retain a benefit by the public which is to file (and by the USPTO to process) an application. Confidentiality is governed by 35 U.S.C. 122 and 37 CFR 1.11 and 1.14. This collection is estimated to take 1 hour to complete, including gathering, preparing, and submitting the completed application form to the USPTO. Time will vary depending upon the individual case. Any comments on the amount of time you require to complete this form and/ or suggestions for reducing this burden, should be sent to the Chief Information Officer, U.S. Patent and Trademark Office, U.S. Department of Commerce, P.O. Box 1450, Alexandria, VA 22313-1450. DO NOT SEND FEES OR COMPLETED FORMS TO THIS ADDRESS. **This form can only be used when in conjunction with EFS-Web. If this form is mailed to the USPTO, it may cause delays in reinstating the patent.**

# Privacy Act Statement

The Privacy Act of 1974 (P.L. 93-579) requires that you be given certain information in connection with your submission of the attached form related to a patent application or patent. Accordingly, pursuant to the requirements of the Act, please be advised that: (1) the general authority for the collection of this information is 35 U.S.C. 2(b)(2); (2) furnishing of the information solicited is voluntary; and (3) the principal purpose for which the information is used by the U.S. Patent and Trademark Office is to process and/or examine your submission related to a patent application or patent. If you do not furnish the requested information, the U.S. Patent and Trademark Office may not be able to process and/or examine your submission, which may result in termination of proceedings or abandonment of the application or expiration of the patent.

The information provided by you in this form will be subject to the following routine uses:

1. The information on this form will be treated confidentially to the extent allowed under the Freedom of Information Act (5 U.S.C. 552) and the Privacy Act (5 U.S.C. 552a). Records from this system of records may be disclosed to the Department of Justice to determine whether the Freedom of Information Act requires disclosure of these records.

2. A record from this system of records may be disclosed, as a routine use, in the course of presenting evidence to a court, magistrate, or administrative tribunal, including disclosures to opposing counsel in the course of settlement negotiations.

3. A record in this system of records may be disclosed, as a routine use, to a Member of Congress submitting a request involving an individual, to whom the record pertains, when the individual has requested assistance from the Member with respect to the subject matter of the record.

4. A record in this system of records may be disclosed, as a routine use, to a contractor of the Agency having need for the information in order to perform a contract. Recipients of information shall be required to comply with the requirements of the Privacy Act of 1974, as amended, pursuant to 5 U.S.C. 552a(m).

5. A record related to an International Application filed under the Patent Cooperation Treaty in this system of records may be disclosed, as a routine use, to the International Bureau of the World Intellectual Property Organization, pursuant to the Patent Cooperation Treaty.

6. A record in this system of records may be disclosed, as a routine use, to another federal agency for purposes of National Security review (35 U.S.C. 181) and for review pursuant to the Atomic Energy Act (42 U.S.C. 218(c)).

7. A record from this system of records may be disclosed, as a routine use, to the Administrator, General Services, or his/her designee, during an inspection of records conducted by GSA as part of that agency's responsibility to recommend improvements in records management practices and programs, under authority of 44 U.S.C. 2904 and 2906. Such disclosure shall be made in accordance with the GSA regulations governing inspection of records for this purpose, and any other relevant (i.e., GSA or Commerce) directive. Such disclosure shall not be used to make determinations about individuals.

8. A record from this system of records may be disclosed, as a routine use, to the public after either publication of the application pursuant to 35 U.S.C. 122(b) or issuance of a patent pursuant to 35 U.S.C. 151. Further, a record may be disclosed, subject to the limitations of 37 CFR 1.14, as a routine use, to the public if the record was filed in an application which became abandoned or in which the proceedings were terminated and which application is referenced by either a published application, an application open to public inspections or an issued patent.

9. A record from this system of records may be disclosed, as a routine use, to a Federal, State, or local law enforcement agency, if the USPTO becomes aware of a violation or potential violation of law or regulation.

UNITED STATES PATENT AND TRADEMARK OFFICE

Commissioner for Patents
United States Patent and Trademark Office
P.O. Box 1450
Alexandria, VA 22313-1450
www.uspto.gov

In re Patent No. 7074490
Issue Date: July 11,2006
Application No. 10436862
Filed: May 13,2003
Attorney Docket No. DC4981CIP

:
:DECISION GRANTING PETITION
:UNDER 37 CFR 1.378(c)
:

This is a decision on the electronic petition, filed August 25,2010 ,under 37 CFR 1.378(c) to accept the unintentionally delayed payment of the 3.5 year maintenance fee for the above-identified patent.

The petition is **GRANTED**.

The maintenance fee is accepted, and the above-identified patent reinstated as of August 25,2010 .
This decision also constitutes notice that the fee has been accepted. An electronic copy of the petition and this decision has been created as an entry in the Image File Wrapper. Nevertheless, petitioner should print and retain an independent copy.

Telephone inquiries related to this electronic decision should be directed to the Electronic Business Center at 1-866-217-9197.

PTO/SB/66 (03-09)
Approved for use through 03/31/2012. OMB 0651-0016
U.S. Patent and Trademark Office: U.S. DEPARTMENT OF COMMERCE
Under the Paperwork Reduction Act of 1995, no persons are required to respond to a collection of information unless it displays valid OMB control number.

# PETITION TO ACCEPT UNINTENTIONALLY DELAYED PAYMENT OF MAINTENANCE FEE IN AN EXPIRED PATENT (37 CFR 1.378(c))

| Patent Number | Issue Date (YYYY-MM-DD) | Application Number | Filing Date (YYYY-MM-DD) | Docket Number (if applicable) |
|---|---|---|---|---|
| 6,926,697 | 2005-08-09 | 10/437,424 | 2003-05-13 | 088000-008300US |

CAUTION: Maintenance fee (and surcharge, if any) payment must correctly identify: (1) the patent number and (2) the application number of the actual U.S. application leading to issuance of that patent to ensure the fee(s) is/are associated with the correct patent. 37 CFR 1.366(c) and (d).

SMALL ENTITY
☒ Patentee claims, or has previously claimed, small entity status. See 37 CFR 1.27.

LOSS OF ENTITLEMENT TO SMALL ENTITY STATUS
☐ Patentee is no longer entitled to small entity status. See 37 CFR 1.27(g)

| NOT Small Entity | | Small Entity | |
|---|---|---|---|
| Fee | Code | Fee | Code |
| ○ 3 ½ year | (1551) | ◉ 3 ½ year | (2551) |
| ○ 7 ½ year | (1552) | ○ 7 ½ year | (2552) |
| ○ 11 ½ year | (1553) | ○ 11 ½ year | (2553) |

SURCHARGE
The surcharge required by 37 CFR 1.20(i)(2) (Fee Code 1558) must be paid as a condition of accepting unintentionally delayed payment of the maintenance fee.

MAINTENANCE FEE (37 CFR 1.20(e)-(g))
The appropriate maintenance fee must be submitted with this petition.

STATEMENT
THE UNDERSIGNED CERTIFIES THAT THE DELAY IN PAYMENT OF THE MAINTENANCE FEE TO THIS PATENT WAS UNINTENTIONAL

PETITIONER(S) REQUEST THAT THE DELAYED PAYMENT OF THE MAINTENANCE FEE BE ACCEPTED AND THE PATENT REINSTATED

THIS PORTION MUST BE COMPLETED BY THE SIGNATORY OR SIGNATORIES

37 CFR 1.378(d) states: "Any petition under this section must be signed by an attorney or agent registered to practice before the Patent and Trademark Office, or by the patentee, the assignee, or other party in interest."

I certify, in accordance with 37 CFR 1.4(d)(4) that I am

◉ An attorney or agent registered to practice before the Patent and Trademark Office

○ A sole patentee

○ A joint patentee; I certify that I am authorized to sign this submission on behalf of all the other patentees.

○ A joint patentee; all of whom are signing this e-petition

○ The assignee of record of the entire interest

Under the Paperwork Reduction Act of 1995, no persons are required to respond to a collection of information unless it displays valid OMB control number.

| Patent Practitioner | | | |
|---|---|---|---|
| A signature of the applicant or representative is required in accordance with 37 CFR 1.33 and 10.18. Please see 37 CFR 1.4(d) for the form of the signature | | | |
| Signature | /J. Georg Seka/ | Date (YYYY-MM-DD) | 2010-12-15 |
| Name | J. Georg Seka | Registration Number | 24491 |

This collection of information is required by 37 CFR 1.378(c). The information is required to obtain or retain a benefit by the public which is to file (and by the USPTO to process) an application. Confidentiality is governed by 35 U.S.C. 122 and 37 CFR 1.11 and 1.14. This collection is estimated to take 1 hour to complete, including gathering, preparing, and submitting the completed application form to the USPTO. Time will vary depending upon the individual case. Any comments on the amount of time you require to complete this form and/ or suggestions for reducing this burden, should be sent to the Chief Information Officer, U.S. Patent and Trademark Office, U.S. Department of Commerce, P.O. Box 1450, Alexandria, VA 22313-1450. DO NOT SEND FEES OR COMPLETED FORMS TO THIS ADDRESS. **This form can only be used when in conjunction with EFS-Web. If this form is mailed to the USPTO, it may cause delays in reinstating the patent.**

# Privacy Act Statement

The Privacy Act of 1974 (P.L. 93-579) requires that you be given certain information in connection with your submission of the attached form related to a patent application or patent. Accordingly, pursuant to the requirements of the Act, please be advised that: (1) the general authority for the collection of this information is 35 U.S.C. 2(b)(2); (2) furnishing of the information solicited is voluntary; and (3) the principal purpose for which the information is used by the U.S. Patent and Trademark Office is to process and/or examine your submission related to a patent application or patent. If you do not furnish the requested information, the U.S. Patent and Trademark Office may not be able to process and/or examine your submission, which may result in termination of proceedings or abandonment of the application or expiration of the patent.

The information provided by you in this form will be subject to the following routine uses:

1. The information on this form will be treated confidentially to the extent allowed under the Freedom of Information Act (5 U.S.C. 552) and the Privacy Act (5 U.S.C. 552a). Records from this system of records may be disclosed to the Department of Justice to determine whether the Freedom of Information Act requires disclosure of these records.

2. A record from this system of records may be disclosed, as a routine use, in the course of presenting evidence to a court, magistrate, or administrative tribunal, including disclosures to opposing counsel in the course of settlement negotiations.

3. A record in this system of records may be disclosed, as a routine use, to a Member of Congress submitting a request involving an individual, to whom the record pertains, when the individual has requested assistance from the Member with respect to the subject matter of the record.

4. A record in this system of records may be disclosed, as a routine use, to a contractor of the Agency having need for the information in order to perform a contract. Recipients of information shall be required to comply with the requirements of the Privacy Act of 1974, as amended, pursuant to 5 U.S.C. 552a(m).

5. A record related to an International Application filed under the Patent Cooperation Treaty in this system of records may be disclosed, as a routine use, to the International Bureau of the World Intellectual Property Organization, pursuant to the Patent Cooperation Treaty.

6. A record in this system of records may be disclosed, as a routine use, to another federal agency for purposes of National Security review (35 U.S.C. 181) and for review pursuant to the Atomic Energy Act (42 U.S.C. 218(c)).

7. A record from this system of records may be disclosed, as a routine use, to the Administrator, General Services, or his/her designee, during an inspection of records conducted by GSA as part of that agency's responsibility to recommend improvements in records management practices and programs, under authority of 44 U.S.C. 2904 and 2906. Such disclosure shall be made in accordance with the GSA regulations governing inspection of records for this purpose, and any other relevant (i.e., GSA or Commerce) directive. Such disclosure shall not be used to make determinations about individuals.

8. A record from this system of records may be disclosed, as a routine use, to the public after either publication of the application pursuant to 35 U.S.C. 122(b) or issuance of a patent pursuant to 35 U.S.C. 151. Further, a record may be disclosed, subject to the limitations of 37 CFR 1.14, as a routine use, to the public if the record was filed in an application which became abandoned or in which the proceedings were terminated and which application is referenced by either a published application, an application open to public inspections or an issued patent.

9. A record from this system of records may be disclosed, as a routine use, to a Federal, State, or local law enforcement agency, if the USPTO becomes aware of a violation or potential violation of law or regulation.

UNITED STATES PATENT AND TRADEMARK OFFICE

Commissioner for Patents
United States Patent and Trademark Office
P.O. Box 1450
Alexandria, VA 22313-1450
www.uspto.gov

In re Patent No. 6926697
Issue Date: August 9,2005
Application No. 10437424
Filed: May 13,2003
Attorney Docket No. RMAL 3.0-010

:
:DECISION GRANTING PETITION
:UNDER 37 CFR 1.378(c)
:

This is a decision on the electronic petition, filed December 15,2010 ,under 37 CFR 1.378(c) to accept the unintentionally delayed payment of the 3.5 year maintenance fee for the above-identified patent.

The petition is **GRANTED**.

The maintenance fee is accepted, and the above-identified patent reinstated as of December 15,2010 . This decision also constitutes notice that the fee has been accepted. An electronic copy of the petition and this decision has been created as an entry in the Image File Wrapper. Nevertheless, petitioner should print and retain an independent copy.

Telephone inquiries related to this electronic decision should be directed to the Electronic Business Center at 1-866-217-9197.

UNITED STATES PATENT AND TRADEMARK OFFICE

Commissioner for Patents
United States Patent and Trademark Office
P.O. Box 1450
Alexandria, VA 22313-1450
www.uspto.gov

In re Patent No. 7044448
Issue Date: May 16,2006
Application No. 10437468
Filed: May 14,2003
Attorney Docket No. 71198-0299

:
:DECISION GRANTING PETITION
:UNDER 37 CFR 1.378(c)
:

This is a decision on the electronic petition, filed February 11,2011 ,under 37 CFR 1.378(c) to accept the unintentionally delayed payment of the 3.5 year maintenance fee for the above-identified patent.

The petition is **GRANTED**.

The maintenance fee is accepted, and the above-identified patent reinstated as of February 11,2011 . This decision also constitutes notice that the fee has been accepted. An electronic copy of the petition and this decision has been created as an entry in the Image File Wrapper. Nevertheless, petitioner should print and retain an independent copy.

Telephone inquiries related to this electronic decision should be directed to the Electronic Business Center at 1-866-217-9197.

PTO/SB/66 (03-09)
Approved for use through 03/31/2012. OMB 0651-0016
U.S. Patent and Trademark Office: U.S. DEPARTMENT OF COMMERCE
Under the Paperwork Reduction Act of 1995, no persons are required to respond to a collection of information unless it displays valid OMB control number.

# PETITION TO ACCEPT UNINTENTIONALLY DELAYED PAYMENT OF MAINTENANCE FEE IN AN EXPIRED PATENT (37 CFR 1.378(c))

| Patent Number | Issue Date (YYYY-MM-DD) | Application Number | Filing Date (YYYY-MM-DD) | Docket Number (if applicable) |
|---|---|---|---|---|
| 7044448 | 2006-05-16 | 10/437,468 | 2003-05-14 | 71198-0299 |

CAUTION: Maintenance fee (and surcharge, if any) payment must correctly identify: (1) the patent number and (2) the application number of the actual U.S. application leading to issuance of that patent to ensure the fee(s) is/are associated with the correct patent. 37 CFR 1.366(c) and (d).

SMALL ENTITY
☐ Patentee claims, or has previously claimed, small entity status. See 37 CFR 1.27.

LOSS OF ENTITLEMENT TO SMALL ENTITY STATUS
☐ Patentee is no longer entitled to small entity status. See 37 CFR 1.27(g)

| NOT Small Entity | | | Small Entity | | |
|---|---|---|---|---|---|
| | Fee | Code | | Fee | Code |
| ◉ | 3 ½ year | (1551) | ○ | 3 ½ year | (2551) |
| ○ | 7 ½ year | (1552) | ○ | 7 ½ year | (2552) |
| ○ | 11 ½ year | (1553) | ○ | 11 ½ year | (2553) |

SURCHARGE
The surcharge required by 37 CFR 1.20(i)(2) (Fee Code 1558) must be paid as a condition of accepting unintentionally delayed payment of the maintenance fee.

MAINTENANCE FEE (37 CFR 1.20(e)-(g))
The appropriate maintenance fee must be submitted with this petition.

STATEMENT
THE UNDERSIGNED CERTIFIES THAT THE DELAY IN PAYMENT OF THE MAINTENANCE FEE TO THIS PATENT WAS UNINTENTIONAL

PETITIONER(S) REQUEST THAT THE DELAYED PAYMENT OF THE MAINTENANCE FEE BE ACCEPTED AND THE PATENT REINSTATED

THIS PORTION MUST BE COMPLETED BY THE SIGNATORY OR SIGNATORIES

37 CFR 1.378(d) states: "Any petition under this section must be signed by an attorney or agent registered to practice before the Patent and Trademark Office, or by the patentee, the assignee, or other party in interest."

I certify, in accordance with 37 CFR 1.4(d)(4) that I am

◉ An attorney or agent registered to practice before the Patent and Trademark Office

○ A sole patentee

○ A joint patentee; I certify that I am authorized to sign this submission on behalf of all the other patentees.

○ A joint patentee; all of whom are signing this e-petition

○ The assignee of record of the entire interest

Under the Paperwork Reduction Act of 1995, no persons are required to respond to a collection of information unless it displays valid OMB control number.

| Patent Practitioner | | | |
|---|---|---|---|
| A signature of the applicant or representative is required in accordance with 37 CFR 1.33 and 10.18. Please see 37 CFR 1.4(d) for the form of the signature | | | |
| Signature | /G. Thomas Williams/ | Date (YYYY-MM-DD) | 2011-02-11 |
| Name | G. Thomas Williams | Registration Number | 42228 |

This collection of information is required by 37 CFR 1.378(c). The information is required to obtain or retain a benefit by the public which is to file (and by the USPTO to process) an application. Confidentiality is governed by 35 U.S.C. 122 and 37 CFR 1.11 and 1.14. This collection is estimated to take 1 hour to complete, including gathering, preparing, and submitting the completed application form to the USPTO. Time will vary depending upon the individual case. Any comments on the amount of time you require to complete this form and/ or suggestions for reducing this burden, should be sent to the Chief Information Officer, U.S. Patent and Trademark Office, U.S. Department of Commerce, P.O. Box 1450, Alexandria, VA 22313-1450. DO NOT SEND FEES OR COMPLETED FORMS TO THIS ADDRESS. **This form can only be used when in conjunction with EFS-Web. If this form is mailed to the USPTO, it may cause delays in reinstating the patent.**

# Privacy Act Statement

The Privacy Act of 1974 (P.L. 93-579) requires that you be given certain information in connection with your submission of the attached form related to a patent application or patent. Accordingly, pursuant to the requirements of the Act, please be advised that: (1) the general authority for the collection of this information is 35 U.S.C. 2(b)(2); (2) furnishing of the information solicited is voluntary; and (3) the principal purpose for which the information is used by the U.S. Patent and Trademark Office is to process and/or examine your submission related to a patent application or patent. If you do not furnish the requested information, the U.S. Patent and Trademark Office may not be able to process and/or examine your submission, which may result in termination of proceedings or abandonment of the application or expiration of the patent.

The information provided by you in this form will be subject to the following routine uses:

1. The information on this form will be treated confidentially to the extent allowed under the Freedom of Information Act (5 U.S.C. 552) and the Privacy Act (5 U.S.C. 552a). Records from this system of records may be disclosed to the Department of Justice to determine whether the Freedom of Information Act requires disclosure of these records.

2. A record from this system of records may be disclosed, as a routine use, in the course of presenting evidence to a court, magistrate, or administrative tribunal, including disclosures to opposing counsel in the course of settlement negotiations.

3. A record in this system of records may be disclosed, as a routine use, to a Member of Congress submitting a request involving an individual, to whom the record pertains, when the individual has requested assistance from the Member with respect to the subject matter of the record.

4. A record in this system of records may be disclosed, as a routine use, to a contractor of the Agency having need for the information in order to perform a contract. Recipients of information shall be required to comply with the requirements of the Privacy Act of 1974, as amended, pursuant to 5 U.S.C. 552a(m).

5. A record related to an International Application filed under the Patent Cooperation Treaty in this system of records may be disclosed, as a routine use, to the International Bureau of the World Intellectual Property Organization, pursuant to the Patent Cooperation Treaty.

6. A record in this system of records may be disclosed, as a routine use, to another federal agency for purposes of National Security review (35 U.S.C. 181) and for review pursuant to the Atomic Energy Act (42 U.S.C. 218(c)).

7. A record from this system of records may be disclosed, as a routine use, to the Administrator, General Services, or his/her designee, during an inspection of records conducted by GSA as part of that agency's responsibility to recommend improvements in records management practices and programs, under authority of 44 U.S.C. 2904 and 2906. Such disclosure shall be made in accordance with the GSA regulations governing inspection of records for this purpose, and any other relevant (i.e., GSA or Commerce) directive. Such disclosure shall not be used to make determinations about individuals.

8. A record from this system of records may be disclosed, as a routine use, to the public after either publication of the application pursuant to 35 U.S.C. 122(b) or issuance of a patent pursuant to 35 U.S.C. 151. Further, a record may be disclosed, subject to the limitations of 37 CFR 1.14, as a routine use, to the public if the record was filed in an application which became abandoned or in which the proceedings were terminated and which application is referenced by either a published application, an application open to public inspections or an issued patent.

9. A record from this system of records may be disclosed, as a routine use, to a Federal, State, or local law enforcement agency, if the USPTO becomes aware of a violation or potential violation of law or regulation.

PTO/SB/66 (03-09)
Approved for use through 03/31/2012. OMB 0651-0016
U.S. Patent and Trademark Office: U.S. DEPARTMENT OF COMMERCE
Under the Paperwork Reduction Act of 1995, no persons are required to respond to a collection of information unless it displays valid OMB control number.

# PETITION TO ACCEPT UNINTENTIONALLY DELAYED PAYMENT OF MAINTENANCE FEE IN AN EXPIRED PATENT (37 CFR 1.378(c))

| Patent Number | Issue Date (YYYY-MM-DD) | Application Number | Filing Date (YYYY-MM-DD) | Docket Number (if applicable) |
|---|---|---|---|---|
| 6914668 | 2005-07-05 | 10437507 | 2003-05-14 | 231-002A |

CAUTION: Maintenance fee (and surcharge, if any) payment must correctly identify: (1) the patent number and (2) the application number of the actual U.S. application leading to issuance of that patent to ensure the fee(s) is/are associated with the correct patent. 37 CFR 1.366(c) and (d).

SMALL ENTITY
☐ Patentee claims, or has previously claimed, small entity status. See 37 CFR 1.27.

LOSS OF ENTITLEMENT TO SMALL ENTITY STATUS
☐ Patentee is no longer entitled to small entity status. See 37 CFR 1.27(g)

| NOT Small Entity | | Small Entity | |
|---|---|---|---|
| Fee | Code | Fee | Code |
| ◉ 3 ½ year | (1551) | ○ 3 ½ year | (2551) |
| ○ 7 ½ year | (1552) | ○ 7 ½ year | (2552) |
| ○ 11 ½ year | (1553) | ○ 11 ½ year | (2553) |

SURCHARGE
The surcharge required by 37 CFR 1.20(i)(2) (Fee Code 1558) must be paid as a condition of accepting unintentionally delayed payment of the maintenance fee.

MAINTENANCE FEE (37 CFR 1.20(e)-(g))
The appropriate maintenance fee must be submitted with this petition.

STATEMENT
THE UNDERSIGNED CERTIFIES THAT THE DELAY IN PAYMENT OF THE MAINTENANCE FEE TO THIS PATENT WAS UNINTENTIONAL

PETITIONER(S) REQUEST THAT THE DELAYED PAYMENT OF THE MAINTENANCE FEE BE ACCEPTED AND THE PATENT REINSTATED

THIS PORTION MUST BE COMPLETED BY THE SIGNATORY OR SIGNATORIES

37 CFR 1.378(d) states: "Any petition under this section must be signed by an attorney or agent registered to practice before the Patent and Trademark Office, or by the patentee, the assignee, or other party in interest."

I certify, in accordance with 37 CFR 1.4(d)(4) that I am

◉ An attorney or agent registered to practice before the Patent and Trademark Office

○ A sole patentee

○ A joint patentee; I certify that I am authorized to sign this submission on behalf of all the other patentees.

○ A joint patentee; all of whom are signing this e-petition

○ The assignee of record of the entire interest

Under the Paperwork Reduction Act of 1995, no persons are required to respond to a collection of information unless it displays valid OMB control number.

| Patent Practitioner | | | |
|---|---|---|---|
| A signature of the applicant or representative is required in accordance with 37 CFR 1.33 and 10.18. Please see 37 CFR 1.4(d) for the form of the signature | | | |
| Signature | /Seth H. Ostrow/ | Date (YYYY-MM-DD) | 2011-05-19 |
| Name | Seth H. Ostrow | Registration Number | 37410 |

This collection of information is required by 37 CFR 1.378(c). The information is required to obtain or retain a benefit by the public which is to file (and by the USPTO to process) an application. Confidentiality is governed by 35 U.S.C. 122 and 37 CFR 1.11 and 1.14. This collection is estimated to take 1 hour to complete, including gathering, preparing, and submitting the completed application form to the USPTO. Time will vary depending upon the individual case. Any comments on the amount of time you require to complete this form and/ or suggestions for reducing this burden, should be sent to the Chief Information Officer, U.S. Patent and Trademark Office, U.S. Department of Commerce, P.O. Box 1450, Alexandria, VA 22313-1450. DO NOT SEND FEES OR COMPLETED FORMS TO THIS ADDRESS. **This form can only be used when in conjunction with EFS-Web. If this form is mailed to the USPTO, it may cause delays in reinstating the patent.**

# Privacy Act Statement

The Privacy Act of 1974 (P.L. 93-579) requires that you be given certain information in connection with your submission of the attached form related to a patent application or patent. Accordingly, pursuant to the requirements of the Act, please be advised that: (1) the general authority for the collection of this information is 35 U.S.C. 2(b)(2); (2) furnishing of the information solicited is voluntary; and (3) the principal purpose for which the information is used by the U.S. Patent and Trademark Office is to process and/or examine your submission related to a patent application or patent. If you do not furnish the requested information, the U.S. Patent and Trademark Office may not be able to process and/or examine your submission, which may result in termination of proceedings or abandonment of the application or expiration of the patent.

The information provided by you in this form will be subject to the following routine uses:

1. The information on this form will be treated confidentially to the extent allowed under the Freedom of Information Act (5 U.S.C. 552) and the Privacy Act (5 U.S.C. 552a). Records from this system of records may be disclosed to the Department of Justice to determine whether the Freedom of Information Act requires disclosure of these records.

2. A record from this system of records may be disclosed, as a routine use, in the course of presenting evidence to a court, magistrate, or administrative tribunal, including disclosures to opposing counsel in the course of settlement negotiations.

3. A record in this system of records may be disclosed, as a routine use, to a Member of Congress submitting a request involving an individual, to whom the record pertains, when the individual has requested assistance from the Member with respect to the subject matter of the record.

4. A record in this system of records may be disclosed, as a routine use, to a contractor of the Agency having need for the information in order to perform a contract. Recipients of information shall be required to comply with the requirements of the Privacy Act of 1974, as amended, pursuant to 5 U.S.C. 552a(m).

5. A record related to an International Application filed under the Patent Cooperation Treaty in this system of records may be disclosed, as a routine use, to the International Bureau of the World Intellectual Property Organization, pursuant to the Patent Cooperation Treaty.

6. A record in this system of records may be disclosed, as a routine use, to another federal agency for purposes of National Security review (35 U.S.C. 181) and for review pursuant to the Atomic Energy Act (42 U.S.C. 218(c)).

7. A record from this system of records may be disclosed, as a routine use, to the Administrator, General Services, or his/her designee, during an inspection of records conducted by GSA as part of that agency's responsibility to recommend improvements in records management practices and programs, under authority of 44 U.S.C. 2904 and 2906. Such disclosure shall be made in accordance with the GSA regulations governing inspection of records for this purpose, and any other relevant (i.e., GSA or Commerce) directive. Such disclosure shall not be used to make determinations about individuals.

8. A record from this system of records may be disclosed, as a routine use, to the public after either publication of the application pursuant to 35 U.S.C. 122(b) or issuance of a patent pursuant to 35 U.S.C. 151. Further, a record may be disclosed, subject to the limitations of 37 CFR 1.14, as a routine use, to the public if the record was filed in an application which became abandoned or in which the proceedings were terminated and which application is referenced by either a published application, an application open to public inspections or an issued patent.

9. A record from this system of records may be disclosed, as a routine use, to a Federal, State, or local law enforcement agency, if the USPTO becomes aware of a violation or potential violation of law or regulation.

UNITED STATES PATENT AND TRADEMARK OFFICE

Commissioner for Patents
United States Patent and Trademark Office
P.O. Box 1450
Alexandria, VA 22313-1450
www.uspto.gov

In re Patent No. 6914668
Issue Date: July 5,2005
Application No. 10437507
Filed: May 14,2003
Attorney Docket No. U 014603-4

:DECISION GRANTING PETITION
:UNDER 37 CFR 1.378(c)

This is a decision on the electronic petition, filed May 19,2011 ,under 37 CFR 1.378(c) to accept the unintentionally delayed payment of the 3.5 year maintenance fee for the above-identified patent.

The petition is **GRANTED**.

The maintenance fee is accepted, and the above-identified patent reinstated as of May 19,2011 .
This decision also constitutes notice that the fee has been accepted. An electronic copy of the petition and this decision has been created as an entry in the Image File Wrapper. Nevertheless, petitioner should print and retain an independent copy.

Telephone inquiries related to this electronic decision should be directed to the Electronic Business Center at 1-866-217-9197.

SPE RESPONSE FOR CERTIFICATE OF CORRECTION

DATE : 8/1/11

TO SPE OF : ART UNIT: 3644

SUBJECT : Request for Certificate of Correction for Appl. No.: 10/437980 Patent No.: 6772979

CofC mailroom date: _____

Please respond to this request for a certificate of correction within 7 days.

**FOR IFW FILES:**

Please review the requested changes/corrections as shown in the **COCIN** document(s) in the IFW application image. No new matter should be introduced, nor should the scope or meaning of the claims be changed.

Please complete the response (see below) and forward the completed response to scanning using document code **COCX**.

**FOR PAPER FILES:**

Please review the requested changes/corrections as shown in the attached certificate of correction. Please complete this form (see below) and forward it with the file to:

**Certificates of Correction Branch (CofC)**
**Randolph Square – 9D10-A**
**Palm Location 7580**

**Note:** _____

Magdalene Talley
**Certificates of Correction Branch**

~~703-756-1814~~
571-272-0423

**Thank You For Your Assistance**

**The request for issuing the above-identified correction(s) is hereby:**
Note your decision on the appropriate box.

- ☒ **Approved** — **All** changes apply.
- ☐ **Approved in Part** — Specify below which changes **do not** apply.
- ☐ **Denied** — State the reasons for denial below.

**Comments:** _____

Timothy D. Collins
**SPE**

3644
**Art Unit**

PTO/SB/66 (03-09)
Approved for use through 03/31/2012. OMB 0651-0016
U.S. Patent and Trademark Office: U.S. DEPARTMENT OF COMMERCE
Under the Paperwork Reduction Act of 1995, no persons are required to respond to a collection of information unless it displays valid OMB control number.

# PETITION TO ACCEPT UNINTENTIONALLY DELAYED PAYMENT OF MAINTENANCE FEE IN AN EXPIRED PATENT (37 CFR 1.378(c))

| Patent Number | Issue Date (YYYY-MM-DD) | Application Number | Filing Date (YYYY-MM-DD) | Docket Number (if applicable) |
|---|---|---|---|---|
| 7022682 | 2006-04-04 | 10438088 | 2003-05-14 | 27512-3003US01 |

CAUTION: Maintenance fee (and surcharge, if any) payment must correctly identify: (1) the patent number and (2) the application number of the actual U.S. application leading to issuance of that patent to ensure the fee(s) is/are associated with the correct patent. 37 CFR 1.366(c) and (d).

SMALL ENTITY
☒ Patentee claims, or has previously claimed, small entity status. See 37 CFR 1.27.

LOSS OF ENTITLEMENT TO SMALL ENTITY STATUS
☐ Patentee is no longer entitled to small entity status. See 37 CFR 1.27(g)

| NOT Small Entity | | Small Entity | |
|---|---|---|---|
| Fee | Code | Fee | Code |
| ○ 3 ½ year | (1551) | ◉ 3 ½ year | (2551) |
| ○ 7 ½ year | (1552) | ○ 7 ½ year | (2552) |
| ○ 11 ½ year | (1553) | ○ 11 ½ year | (2553) |

SURCHARGE
The surcharge required by 37 CFR 1.20(i)(2) (Fee Code 1558) must be paid as a condition of accepting unintentionally delayed payment of the maintenance fee.

MAINTENANCE FEE (37 CFR 1.20(e)-(g))
The appropriate maintenance fee must be submitted with this petition.

STATEMENT
THE UNDERSIGNED CERTIFIES THAT THE DELAY IN PAYMENT OF THE MAINTENANCE FEE TO THIS PATENT WAS UNINTENTIONAL

PETITIONER(S) REQUEST THAT THE DELAYED PAYMENT OF THE MAINTENANCE FEE BE ACCEPTED AND THE PATENT REINSTATED

THIS PORTION MUST BE COMPLETED BY THE SIGNATORY OR SIGNATORIES

37 CFR 1.378(d) states: "Any petition under this section must be signed by an attorney or agent registered to practice before the Patent and Trademark Office, or by the patentee, the assignee, or other party in interest."

I certify, in accordance with 37 CFR 1.4(d)(4) that I am

◉ An attorney or agent registered to practice before the Patent and Trademark Office

○ A sole patentee

○ A joint patentee; I certify that I am authorized to sign this submission on behalf of all the other patentees.

○ A joint patentee; all of whom are signing this e-petition

○ The assignee of record of the entire interest

Under the Paperwork Reduction Act of 1995, no persons are required to respond to a collection of information unless it displays valid OMB control number.

| Patent Practitioner | | | |
|---|---|---|---|
| A signature of the applicant or representative is required in accordance with 37 CFR 1.33 and 10.18. Please see 37 CFR 1.4(d) for the form of the signature | | | |
| Signature | /Brick G. Power/ | Date (YYYY-MM-DD) | 2010-08-06 |
| Name | Brick G. Power | Registration Number | 38581 |

This collection of information is required by 37 CFR 1.378(c). The information is required to obtain or retain a benefit by the public which is to file (and by the USPTO to process) an application. Confidentiality is governed by 35 U.S.C. 122 and 37 CFR 1.11 and 1.14. This collection is estimated to take 1 hour to complete, including gathering, preparing, and submitting the completed application form to the USPTO. Time will vary depending upon the individual case. Any comments on the amount of time you require to complete this form and/ or suggestions for reducing this burden, should be sent to the Chief Information Officer, U.S. Patent and Trademark Office, U.S. Department of Commerce, P.O. Box 1450, Alexandria, VA 22313-1450. DO NOT SEND FEES OR COMPLETED FORMS TO THIS ADDRESS. **This form can only be used when in conjunction with EFS-Web. If this form is mailed to the USPTO, it may cause delays in reinstating the patent.**

# Privacy Act Statement

The Privacy Act of 1974 (P.L. 93-579) requires that you be given certain information in connection with your submission of the attached form related to a patent application or patent. Accordingly, pursuant to the requirements of the Act, please be advised that: (1) the general authority for the collection of this information is 35 U.S.C. 2(b)(2); (2) furnishing of the information solicited is voluntary; and (3) the principal purpose for which the information is used by the U.S. Patent and Trademark Office is to process and/or examine your submission related to a patent application or patent. If you do not furnish the requested information, the U.S. Patent and Trademark Office may not be able to process and/or examine your submission, which may result in termination of proceedings or abandonment of the application or expiration of the patent.

The information provided by you in this form will be subject to the following routine uses:

1. The information on this form will be treated confidentially to the extent allowed under the Freedom of Information Act (5 U.S.C. 552) and the Privacy Act (5 U.S.C. 552a). Records from this system of records may be disclosed to the Department of Justice to determine whether the Freedom of Information Act requires disclosure of these records.

2. A record from this system of records may be disclosed, as a routine use, in the course of presenting evidence to a court, magistrate, or administrative tribunal, including disclosures to opposing counsel in the course of settlement negotiations.

3. A record in this system of records may be disclosed, as a routine use, to a Member of Congress submitting a request involving an individual, to whom the record pertains, when the individual has requested assistance from the Member with respect to the subject matter of the record.

4. A record in this system of records may be disclosed, as a routine use, to a contractor of the Agency having need for the information in order to perform a contract. Recipients of information shall be required to comply with the requirements of the Privacy Act of 1974, as amended, pursuant to 5 U.S.C. 552a(m).

5. A record related to an International Application filed under the Patent Cooperation Treaty in this system of records may be disclosed, as a routine use, to the International Bureau of the World Intellectual Property Organization, pursuant to the Patent Cooperation Treaty.

6. A record in this system of records may be disclosed, as a routine use, to another federal agency for purposes of National Security review (35 U.S.C. 181) and for review pursuant to the Atomic Energy Act (42 U.S.C. 218(c)).

7. A record from this system of records may be disclosed, as a routine use, to the Administrator, General Services, or his/her designee, during an inspection of records conducted by GSA as part of that agency's responsibility to recommend improvements in records management practices and programs, under authority of 44 U.S.C. 2904 and 2906. Such disclosure shall be made in accordance with the GSA regulations governing inspection of records for this purpose, and any other relevant (i.e., GSA or Commerce) directive. Such disclosure shall not be used to make determinations about individuals.

8. A record from this system of records may be disclosed, as a routine use, to the public after either publication of the application pursuant to 35 U.S.C. 122(b) or issuance of a patent pursuant to 35 U.S.C. 151. Further, a record may be disclosed, subject to the limitations of 37 CFR 1.14, as a routine use, to the public if the record was filed in an application which became abandoned or in which the proceedings were terminated and which application is referenced by either a published application, an application open to public inspections or an issued patent.

9. A record from this system of records may be disclosed, as a routine use, to a Federal, State, or local law enforcement agency, if the USPTO becomes aware of a violation or potential violation of law or regulation.

UNITED STATES PATENT AND TRADEMARK OFFICE

Commissioner for Patents
United States Patent and Trademark Office
P.O. Box 1450
Alexandria, VA 22313-1450
www.uspto.gov

In re Patent No. 7022682
Issue Date: April 4,2006
Application No. 10438088
Filed: May 14,2003
Attorney Docket No. ENDO-006

:DECISION GRANTING PETITION
:UNDER 37 CFR 1.378(c)

This is a decision on the electronic petition, filed August 6,2010 ,under 37 CFR 1.378(c) to accept the unintentionally delayed payment of the 3.5 year maintenance fee for the above-identified patent.

The petition is **GRANTED**.

The maintenance fee is accepted, and the above-identified patent reinstated as of August 6,2010 .
This decision also constitutes notice that the fee has been accepted. An electronic copy of the petition and this decision has been created as an entry in the Image File Wrapper. Nevertheless, petitioner should print and retain an independent copy.

Telephone inquiries related to this electronic decision should be directed to the Electronic Business Center at 1-866-217-9197.

UNITED STATES PATENT AND TRADEMARK OFFICE

COMMISSIONER FOR PATENTS
UNITED STATES PATENT AND TRADEMARK OFFICE
P.O. BOX 1450
ALEXANDRIA, VA 22313-1450
WWW.USPTO.GOV

Paper No.

Bridgelux, Inc. c/o Novak Druce + Quigg LLP
1000 Lousiana Street, Fifty- Third Floor
Houston TX 77002

MAILED
DEC 06 2010
OFFICE OF PETITIONS

| | | |
|---|---|---|
| In re Application of | : | |
| Liu | : | |
| Application No. 10/438,108 | : | |
| Patent No.: 6,869,812 | : | DECISION ON PETITION |
| Filed: May 13, 2003 | : | PURSUANT TO |
| Issued: March 22, 2005 | : | 37 C.F.R. § 1.28(c) |
| Attorney Docket No.: | : | |
| 20079.0002.NPUUS00 | : | |
| Title: HIGH POWER ALLNGAN BASED | : | |
| MULTI-CHIP LIGHT EMITTING DIODE | : | |

This is a notice regarding your request for acceptance of a fee deficiency submission pursuant to 37 C.F.R. § 1.28, received on October 29, 2010. On September 1, 1998, the Court of Appeals for the Federal Circuit held that 37 C.F.R. § 1.28(c) is the sole provision governing the time for correction of the erroneous payment of the issue fee as a small entity. See DH Technology v. Synergystex International, Inc. 154 F.3d 1333, 47 USPQ2d 1865 (Fed. Cir. Sept. 1, 1998).

The Office no longer investigates or rejects original or reissue applications under 37 C.F.R. § 1.56. 1098 Off. Gaz. Pat. Office 502 (January 3, 1989). Therefore, nothing in this notice is intended to imply that an investigation was done.

Petitioner has identified the particular type of fee that was erroneously paid as a small entity, when the small entity fee was actually paid, the small entity fee that was actually paid, the deficiency owed amount, and the total deficiency payment owed.

The deficiency payment in the amount of $515 has been received.

Your fee deficiency submission pursuant to 37 C.F.R. § 1.28(c) is hereby accepted. The petition is **GRANTED** accordingly.

This patent is no longer entitled to small entity status. Accordingly, all future fees paid in this patent must be paid at the large entity rate.

Telephone inquiries regarding *this decision* should be directed to the undersigned at (571) 272-3225.[1]

/Paul Shanoski/
Paul Shanoski
Senior Attorney
Office of Petitions

---

1 Petitioner will note that all practice before the Office should be in writing, and the action of the Office will be based exclusively on the written record in the Office. See 37 C.F.R. § 1.2. As such, Petitioner is reminded that no telephone discussion may be controlling or considered authority for Petitioner's further action(s).

UNITED STATES PATENT AND TRADEMARK OFFICE

Commissioner for Patents
United States Patent and Trademark Office
P.O. Box 1450
Alexandria, VA 22313-1450
www.uspto.gov

STAAS & HALSEY LLP
SUITE 700
1201 NEW YORK AVENUE, N.W.
WASHINGTON DC 20005

**MAILED**

NOV 01 2010

**OFFICE OF PETITIONS**

In re Patent No. 7,473,151 :
Issue Date: January 6, 2009 :
Application No. 10/438,199 : DECISION ON PETITION
Filed: May 15, 2003 :
Attorney Docket No. 1876.1011 :

This is a decision on the Second Request For Certificate Of Correction, filed November 6, 2009, requesting correction on the Title Page of the subject patent to identify the correct assignee's name. The Request is being treated as a Petition Under 37 CFR §3.81(b). A completed Certificate of Correction Form (PTO/SB/44) was submitted with Petition.

The petition under 37 CFR §3.81(b) is **GRANTED**.

Petitioner requests that the present Petition was submitted to correct the assignee's name on the previously submitted PTOL-85B. Accordingly, petitioner requests that a Certificate of Correction (PTO/SB/44) be issued to correct assignee's name to the Title Page of the Letters Patent.

37 CFR 3.81(b), effective June 25, 2004, reads:

> *After payment of the issue fee:* Any request for issuance of an application in the name of the assignee submitted after the date of payment of the issue fee, and any request for a patent to be corrected to state the name of the assignee, must state that the assignment was submitted for recordation as set forth in § 3.11 before issuance of the patent, and must include a request for a certificate of correction under § 1.323 of this chapter (accompanied by the fee set forth in § 1.20(a) and the processing fee set forth in § 1.17(i) of this chapter.

The requisite $100.00 fee (Fee Code 1811), as set forth under 37 CFR 1.20(a), and the requisite $130.00 processing fee (Fee Code 1464), as set forth under 37 CFR 1.17(i), have been submitted. Further, Office assignment records are consistent with the requested correction. Accordingly, since the Petition complies with the provisions of 37 CFR 3.81(b), it is appropriate for the Office to issue a Certificate of Correction in accordance with the content of the form (PTO/SB/44) submitted with petition.

Inquiries related this communication should be directed to the undersigned at (571)272-3213.

Any questions concerning the issuance of a Certificate of Correction should be directed to the Certificates of Correction Branch at (571) 272-4200.

This matter is being referred to the Certificates of Correction Branch for processing of a Certificate of Correction in U.S. Patent No. 7,473,151.

Cheryl Gibson-Baylor
Petitions Examiner
Office of Petitions

UNITED STATES PATENT AND TRADEMARK OFFICE

Commissioner for Patents
United States Patent and Trademark Office
P.O. Box 1450
Alexandria, VA 22313-1450
www.uspto.gov

JONES DAY
222 E. 41ST. STREET
NEW YORK NY 10017

MAILED
MAY 20 2011
OFFICE OF PETITIONS

| | | |
|---|---|---|
| In re Application of | : | |
| Zeldis | : | |
| Application No. 10/438,213 | : | ON APPLICATION FOR |
| Filed: May 15, 2003 | : | PATENT TERM ADJUSTMENT |
| Atty Docket No. 9516-074-999 | : | |

This is in response to the REQUEST FOR RECONSIDERATION OF PATENT TERM ADJUSTMENT UNDER 37 C.F.R. 1.705(b), filed March 24, 2011. Applicant submits that the patent term adjustment to be indicated on the patent is one hundred forty-five (145) days, not zero (0) days as calculated by the Office as of the mailing of the initial determination of patent term adjustment. Applicant requests this correction partly on the basis that the Office will take in excess of three years to issue this patent.

In addition, applicant disputes the period of reduction of 151 days for Applicant delay entered for the purported filing of an Information Disclosure Statement (IDS) on July 27, 2007. Applicant discloses the Office incorrectly calculated the length of Applicant delay in connection with the filing of a supplemental response on March 27, 2008. Applicant discloses additional periods of Applicant delay associated with the filing of IDSs on June 8, 2010, December 7, 2010, and December 15, 2010. Applicant disputes a 94 day period of reduction associated with the filing of an IDS on February 24, 2011.

To the extent that applicant requests reconsideration of the patent term adjustment as it relates to the Office's failure to issue the patent within 3 years of the filing date, the application for patent term adjustment under 37 CFR 1.705(b) is **DISMISSED as PREMATURE**.

Knowledge of the actual date the patent issues is required to calculate the amount, if any, of additional patent term patentee is entitled to for Office failure to issue the patent within 3 years. See § 1.702(b). This is true even in this instance where a request for continued examination (RCE) was filed.

The computer will not undertake the § 1.702(b) calculation until the actual date of issuance of the patent has been determined. Likewise, the computer will not calculate any further Office delay under § 1.702(a)(4) or applicant delay under § 1.704(c)(10) until the actual date of issuance of the patent has been determined. As such, the Office cannot make a determination on the correctness of the patent term adjustment until the patent has issued.

Requesting reconsideration of the patent term adjustment to be indicated on the patent under 37 CFR 1.705(b) based on the initial determination of patent term adjustment and a projected issuance date of the patent or even the filing date of the request for continued examination is premature. Accordingly, it is appropriate to dismiss as premature such a request.

Rather than file an application for patent term adjustment under 37 CFR 1.705(b) contesting the 37 CFR 1.702(b) calculation at the time of the mailing of the notice of allowance, applicant is advised that he may wait until the time of the issuance of the patent and file a request for reconsideration of the patent term adjustment pursuant to 37 CFR 1.705(d). As the USPTO does not calculate the amount of time earned pursuant to 37 CFR 1.702(b) until the time of the issuance of the patent, the Office will consider any request for reconsideration of the patent term adjustment due to an error in the calculation of 37 CFR 1.702(b) to be timely if the request for reconsideration is filed within two months of the issuance of the patent. However, as to all other bases for contesting the initial determination of patent term adjustment received with the notice of allowance, applicant must timely file an application for patent term adjustment prior to the payment of the issue fee[1].

To the extent that applicant otherwise requests correction of the initial determination of patent term adjustment (PTA), the

---

[1] For example, if applicant disputes both the calculation of patent term adjustment under 37 CFR 1.702(a)(1) for Office failure to mail a first Office action or notice of allowance not later than fourteen months after the date on which the application was filed and under 37 CFR 1.702(b) for Office failure to issue a patent within three years of the actual filing date of the application, then applicant must still timely file an application for patent term adjustment prior to the payment of the issue fee to contest the calculation of Office delay in issuing a first Office action or notice of allowance. See 37 CFR 1.705(b) and 35 U.S.C. 154(b)(3)(B). A dispute as to the calculation of the §1.702(a)(1) period raised on request for reconsideration of patent term adjustment under 37 CFR 1.705(d) will be dismissed as untimely filed.

application for patent term adjustment is **GRANTED to the extent indicated herein.**

The Office has updated the PAIR screen to reflect that the correct Patent Term Adjustment determination at the time of the mailing of the Notice of Allowance is one hundred fourteen (114) days. A copy of the updated PAIR screen, showing the determination, is enclosed.

On March 11, 2011, the Office mailed the Determination of Patent Term Adjustment under 35 U.S.C. 154(b) in the above-identified application. The Notice stated that the patent term adjustment to date is 0 days.

Applicant disputes the reduction of 151 days associated with the purported filing of an Information Disclosure Statement (IDS) on July 27, 2007.

Applicant's argument with respect to the Information Disclosure Statement purportedly filed on July 27, 2007 has been considered and found persuasive. A review of the image file wrapper of this application reveals that no correspondence was filed on July 27, 2007. As such, the period of reduction of 151 days is not warranted and will be removed.

Applicant states that the date of receipt of a supplemental response is March 26, 2008, instead of March 27, 2008.

A review of the application history reveals that applicant is correct. The Office incorrectly entered the date of receipt of the supplemental response in the PTA Calculations as March 26, 2008, instead of March 27, 2008.[2] Thus, the date of March 27, 2008, not March 26, 2008, should have been used for the purpose of calculating patent term adjustment. In accordance with 37 CFR 1.704(c)(8), the period of adjustment of the term of the patent should have been reduced by 36 days (not 35 days), counting the number of days in the period beginning on the day after the date the initial reply to the non-final Office action was filed, February 21, 2008, and ending on the date the supplemental reply was filed, March 27, 2008. Accordingly, the period of reduction of 35 days will be removed and a period of reduction of 36 days will be entered.

---

[2] It is noted that the Image File Wrapper for the instant application indicates the date of receipt of the supplemental response was March 27, 2008.

Applicant discloses additional periods of Applicant delay associated with the filing of IDSs on June 8, 2010, December 7, 2010, and December 15, 2010.

A review of the patent term adjustment calculations for the above-identified application reveals that the Office failed to enter a reduction for an IDS filed on June 8, 2010. After applicant filed a reply on March 9, 2010, applicant submitted a supplemental reply or paper in the form of an IDS on June 8, 2010. The record does not support a conclusion that the examiner expressly requested the filing of the IDS. Further, a review of the IDS, filed June 8, 2010, reveals that applicant did not include a statement under 37 CFR 1.704(d).[3] Thus, applicant failed to engage in reasonable efforts to conclude prosecution of the application. The period of adjustment should have been reduced by 91 days pursuant to 37 CFR 1.704(c)(8), counting the number of days beginning on the day after the date the initial reply was filed, March 10, 2010, and ending on the date that the IDS was filed, June 8, 2010. Accordingly, a period of reduction of 91 day will be entered.

A review of the patent term adjustment calculations for the above-identified application reveals that the Office failed to enter reduction for the IDSs filed on December 7, 2010 and December 15, 2010. After applicant filed a reply on November 22, 2010, applicant submitted supplemental replies or papers in the form of IDSs on December 7, 2010 and December 15, 2010. The record does not support a conclusion that the examiner expressly requested the filing of the IDSs. Further, a review of the IDSs, filed December 7, 2010 and December 15, 2010, reveals that applicant did not include a statement under 37 CFR 1.704(d).[4]

---

[3] Pursuant to 37 CFR § 1.704(d):

> A paper containing only an information disclosure statement in compliance with §§ 1.97 and 1.98 will not be considered a failure to engage in reasonable efforts to conclude prosecution (processing or examination) of the application under paragraphs (c)(6), (c)(8), (c)(9), or (c)(10) of this section if it is accompanied by a statement that each item of information contained in the information disclosure statement was first cited in any communication from a foreign patent office in a counterpart application and that this communication was not received by any individual designated in § 1.56(c) more than thirty days prior to the filing of the information disclosure statement. This thirty-day period is not extendable.

[4] See footnote 3 above

Thus, applicant failed to engage in reasonable efforts to conclude prosecution of the application. The period of adjustment should have been reduced by 23 days pursuant to 37 CFR 1.704(c)(8), counting the number of days beginning on the day after the date the initial reply was filed, November 23, 2010, and ending on the date that the second IDS was filed, December 15, 2010. Accordingly, a period of reduction of 23 days will be entered.

Applicant disputes the reduction of 94 days of PTA for applicant's purported delay in filing an IDS on February 24, 2011. Applicant states that the IDS was filed at the request of the examiner and, therefore, no reduction is warranted.

Applicant's argument is well-taken. The contemporaneous evidence submitted with the petition supports a conclusion that on February 23, 2011 the examiner of record requested that applicant file a supplemental IDS. Therefore, the IDS filed on February 24, 2011 was expressly requested by the examiner, within the meaning of § 1.704(c)(8). In addition, it appears that all references have been considered by the Examiner at various dates prior to February 24, 2011. Accordingly, no reduction is warranted and the 94 day period of reduction is being removed.

In view thereof, the determination of patent term adjustment at the time of the mailing of the Notice of Allowance is **one hundred fourteen (114) days** - 645 days of Office delay - 531 (28 + 89 + 33 + 36 + 122 + 90 + 91 + 19 + 23) days of Applicant delay.

The Office acknowledges receipt of the $200.00 fee set forth in 37 CFR 1.18(e) for consideration of the application for patent term adjustment under 37 CFR 1.705(b).

Any request for reconsideration of the patent term adjustment indicated on the patent must be timely filed within 2 months after issuance pursuant to 37 CFR 1.705(d) and must include payment of the required fee under 37 CFR 1.18(e).

The Office of Data Management has been advised of this decision. This application is being referred to the Office of Data Management for issuance of the patent.

Telephone inquiries specific to this decision should be directed to the undersigned at (571) 272-3230.

Shirene Willis Brantley

Shirene Willis Brantley
Senior Petitions Attorney
Office of Petitions

Enclosure: Copy of adjusted PAIR calculation for Application No. 10/438,213

Patent eBusiness

- Electronic Filing
- Patent Application Information (PAIR)
- Patent Ownership
- Fees
- Supplemental Resources & Support

Patent Information

Patent Guidance and General Info
- Codes, Rules & Manuals
- Employee & Office Directories
- Resources & Public Notices

Patent Searches

Patent Official Gazette
- Search Patents & Applications
- Search Biological Sequences
- Copies, Products & Services

Other

Copyrights
Trademarks
Policy & Law
Reports

Patent Application Information Retrieval

Order Certified Application As Filed Order Certified File Wrapper View Order List

10/438,213 METHODS FOR TREATMENT OF MULTIPLE MYELOMA USING 3-(4-AMINO-1-OXO-1,3-DIHYDRO-ISOINDOL-2-YL)-PIPERIDINE-2,6-DIONE

Select New Case | Application Data | Transaction History | Image File Wrapper | Patent Term Adjustments | Continuity Data | Published Documents | Address & Attorney/Agent

## Patent Term Adjustment

| | | | |
|---|---|---|---|
| Filing or 371(c) Date: | 05-15-2003 | Overlapping Days Between {A and B} or {A and C}: | 0 |
| Issue Date of Patent: | - | Non-Overlapping USPTO Delays: | 645 |
| A Delays: | 645 | PTO Manual Adjustments: | 130 |
| B Delays: | 0 | Applicant Delays: | 661 |
| C Delays: | 0 | Total PTA Adjustments: | 114 |

**Patent Term Adjustment History** **Explanation Of Calculations**

| Number | Date | Contents Description | PTO (Days) | APPL (Days) | Start |
|---|---|---|---|---|---|
| 164 | 05-06-2011 | Adjustment of PTA Calculation by PTO | 130 | | 0 |
| 156 | 03-11-2011 | Mail Notice of Allowance | | | 0 |
| 155 | 03-10-2011 | Notice of Allowance Data Verification Completed | | | 0 |
| 154 | 03-10-2011 | Case Docketed to Examiner in GAU | | | 0 |
| 153 | 02-24-2011 | Reference capture on IDS | | | 0 |
| 152 | 02-24-2011 | Information Disclosure Statement (IDS) Filed | | 94 | 133 |
| 151 | 02-24-2011 | Information Disclosure Statement considered | | | 0 |
| 150 | 02-24-2011 | Information Disclosure Statement (IDS) Filed | | | 0 |
| 149 | 02-23-2011 | Allowed Case Returned to the Examiner for Clerical Processing | | | 0 |
| 148 | 02-23-2011 | Document Verification | | | 0 |
| 147 | 02-23-2011 | Corrected filing receipt | | | 0 |
| 146 | 02-23-2011 | Examiner's Amendment Communication | | | 0 |
| 145 | 02-14-2011 | Document Verification | | | 0 |
| 144 | 02-14-2011 | Allowability Notice | | | 0 |
| 143 | 12-15-2010 | Information Disclosure Statement considered | | | 0 |
| 142 | 12-15-2010 | Information Disclosure Statement considered | | | 0 |
| 141 | 12-15-2010 | Information Disclosure Statement (IDS) Filed | | | 0 |
| 140 | 12-15-2010 | Information Disclosure Statement (IDS) Filed | | | 0 |
| 139 | 12-07-2010 | Information Disclosure Statement (IDS) Filed | | | 0 |

| | | | | | |
|---|---|---|---|---|---|
| 138 | 12-15-2010 | Information Disclosure Statement (IDS) Filed | | | 0 |
| 137 | 12-13-2010 | Miscellaneous Incoming Letter | | | 0 |
| 136 | 12-07-2010 | Information Disclosure Statement considered | | | 0 |
| 135 | 12-07-2010 | Information Disclosure Statement (IDS) Filed | | | 0 |
| 134 | 12-07-2010 | Date Forwarded to Examiner | | | 0 |
| 133 | 11-22-2010 | Response after Non-Final Action | | 19 | 130 |
| 132 | 11-22-2010 | Request for Extension of Time - Granted | | | 0 |
| 130 | 08-03-2010 | Mail Non-Final Rejection | 25 | | 112 |
| 129 | 08-02-2010 | Non-Final Rejection | | | 0 |
| 128 | 11-20-2009 | Information Disclosure Statement considered | | | 0 |
| 127 | 07-27-2007 | Information Disclosure Statement considered | | | 0 |
| 126 | 03-09-2010 | Information Disclosure Statement considered | | | 0 |
| 125 | 11-20-2009 | Information Disclosure Statement considered | | | 0 |
| 124 | 06-08-2010 | Information Disclosure Statement considered | | | 0 |
| 123 | 03-09-2010 | Information Disclosure Statement considered | | | 0 |
| 121 | 06-08-2010 | Information Disclosure Statement (IDS) Filed | | | 0 |
| 119 | 06-08-2010 | Information Disclosure Statement (IDS) Filed | | | 0 |
| 118 | 03-09-2010 | Information Disclosure Statement (IDS) Filed | | | 0 |
| 117 | 03-09-2010 | Information Disclosure Statement (IDS) Filed | | | 0 |
| 116 | 03-09-2010 | Reference capture on IDS | | | 0 |
| 115 | 03-09-2010 | Information Disclosure Statement (IDS) Filed | | | 0 |
| 114 | 03-10-2010 | Date Forwarded to Examiner | | | 0 |
| 113 | 03-09-2010 | Amendment Submitted/Entered with Filing of CPA/RCE | | | 0 |
| 112 | 03-09-2010 | Request for Continued Examination (RCE) | | 90 | 102 |
| 111 | 03-10-2010 | Disposal for a RCE / CPA / R129 | | | 0 |
| 110 | 03-09-2010 | Request for Extension of Time - Granted | | | 0 |
| 109 | 03-09-2010 | Information Disclosure Statement (IDS) Filed | | | 0 |
| 108 | 03-09-2010 | Workflow - Request for RCE - Begin | | | 0 |
| 107 | 07-27-2007 | Information Disclosure Statement (IDS) Filed | | | 0 |
| 106 | 11-20-2009 | Information Disclosure Statement (IDS) Filed | | | 0 |
| 105 | 05-20-2009 | Affidavit(s) (Rule 131 or 132) or Exhibit(s) Received | | | 0 |

| | | | | | |
|---|---|---|---|---|---|
| 104 | 11-20-2009 | Information Disclosure Statement (IDS) Filed | | | 0 |
| 103 | 11-20-2009 | Information Disclosure Statement (IDS) Filed | | | 0 |
| 102 | 09-09-2009 | Mail Final Rejection (PTOL - 326) | | | 0 |
| 101 | 09-02-2009 | Final Rejection | | | 0 |
| 100 | 04-29-2009 | Information Disclosure Statement considered | | | 0 |
| 99 | 04-29-2009 | Information Disclosure Statement considered | | | 0 |
| 96 | 05-30-2009 | Date Forwarded to Examiner | | | 0 |
| 95 | 05-20-2009 | Response after Non-Final Action | | | 0 |
| 94 | 04-29-2009 | Information Disclosure Statement (IDS) Filed | | | 0 |
| 93 | 04-29-2009 | Information Disclosure Statement (IDS) Filed | | | 0 |
| 92 | 04-29-2009 | Information Disclosure Statement (IDS) Filed | | | 0 |
| 91 | 03-27-2009 | Mail Miscellaneous Communication to Applicant | 27 | | 77 |
| 90 | 03-25-2009 | Miscellaneous Action with SSP | | | 0 |
| 89 | 03-10-2009 | Correspondence Address Change | | | 0 |
| 88 | 03-06-2009 | Date Forwarded to Examiner | | | 0 |
| 87 | 02-27-2009 | Supplemental Response | | 122 | 77 |
| 86 | 02-27-2009 | Mail Examiner Interview Summary (PTOL - 413) | | | 0 |
| 85 | 02-17-2009 | Examiner Interview Summary Record (PTOL - 413) | | | 0 |
| 78 | 11-13-2008 | Date Forwarded to Examiner | | | 0 |
| 77 | 10-28-2008 | Response after Non-Final Action | | | 0 |
| 76 | 08-06-2008 | Mail Non-Final Rejection | 47 | | 61 |
| 75 | 08-04-2008 | Non-Final Rejection | | | 0 |
| 67 | 04-24-2008 | Date Forwarded to Examiner | | | 0 |
| 66 | 03-26-2008 | Supplemental Response | | 35 | 61 |
| 65 | 03-17-2008 | Mail Examiner Interview Summary (PTOL - 413) | | | 0 |
| 64 | 03-07-2008 | Examiner Interview Summary Record (PTOL - 413) | | | 0 |
| 62 | 02-29-2008 | Date Forwarded to Examiner | | | 0 |
| 61 | 02-20-2008 | Response after Non-Final Action | | | 0 |
| 60 | 01-08-2008 | Case Docketed to Examiner in GAU | | | 0 |
| 59 | 12-31-2007 | Mail Non-Final Rejection | 188 | | 48 |
| 58 | 12-26-2007 | Non-Final Rejection | | | 0 |

| | | | | | |
|---|---|---|---|---|---|
| 57 | 07-27-2007 | Information Disclosure Statement considered | | | 0 |
| 56 | 02-26-2007 | Information Disclosure Statement considered | | | 0 |
| 55 | 08-13-2007 | Case Docketed to Examiner in GAU | | | 0 |
| 54 | 07-27-2007 | Information Disclosure Statement (IDS) Filed | | | 0 |
| 53 | 07-27-2007 | Reference capture on IDS | | | 0 |
| 52 | 07-27-2007 | Information Disclosure Statement (IDS) Filed | | 151 | 48 |
| 51 | 04-10-2007 | Examiner Interview Summary Record (PTOL - 413) | | | 0 |
| 50.7 | 02-26-2007 | Information Disclosure Statement (IDS) Filed | | | 0 |
| 50 | 02-26-2007 | Information Disclosure Statement (IDS) Filed | | | 0 |
| 49 | 03-14-2007 | Date Forwarded to Examiner | | | 0 |
| 48 | 02-26-2007 | Response after Non-Final Action | | 33 | 46 |
| 47 | 02-26-2007 | Request for Extension of Time - Granted | | | 0 |
| 46 | 10-24-2006 | Mail Non-Final Rejection | 8 | | 40 |
| 45 | 10-16-2006 | Non-Final Rejection | | | 0 |
| 44 | 06-16-2006 | Information Disclosure Statement considered | | | 0 |
| 43 | 06-23-2006 | Date Forwarded to Examiner | | | 0 |
| 42 | 06-16-2006 | Amendment Submitted/Entered with Filing of CPA/RCE | | | 0 |
| 41 | 06-23-2006 | Date Forwarded to Examiner | | | 0 |
| 40 | 06-16-2006 | Request for Continued Examination (RCE) | | 89 | 34 |
| 39 | 06-23-2006 | Disposal for a RCE / CPA / R129 | | | 0 |
| 38 | 06-16-2006 | Request for Extension of Time - Granted | | | 0 |
| 37 | 06-16-2006 | Affidavit(s) (Rule 131 or 132) or Exhibit(s) Received | | | 0 |
| 36.7 | 06-16-2006 | Information Disclosure Statement (IDS) Filed | | | 0 |
| 36 | 06-16-2006 | Information Disclosure Statement (IDS) Filed | | | 0 |
| 35 | 06-16-2006 | Workflow - Request for RCE - Begin | | | 0 |
| 34 | 12-19-2005 | Mail Final Rejection (PTOL - 326) | | | 0 |
| 33 | 12-12-2005 | Final Rejection | | | 0 |
| 32 | 10-28-2005 | Information Disclosure Statement considered | | | 0 |
| 31 | 10-28-2005 | Affidavit(s) (Rule 131 or 132) or Exhibit(s) Received | | | 0 |
| 29.7 | 10-28-2005 | Information Disclosure Statement (IDS) Filed | | 0 | 27 |
| 29 | 10-28-2005 | Information Disclosure Statement (IDS) Filed | | | 0 |

| | | | | | |
|---|---|---|---|---|---|
| 28 | 11-28-2005 | Date Forwarded to Examiner | | | 0 |
| 27 | 10-28-2005 | Response after Non-Final Action | | 28 | 25 |
| 26 | 10-28-2005 | Request for Extension of Time - Granted | | | 0 |
| 25 | 06-30-2005 | Mail Non-Final Rejection | 350 | | 0.5 |
| 24 | 06-27-2005 | Non-Final Rejection | | | 0 |
| 23 | 06-01-2005 | Case Docketed to Examiner in GAU | | | 0 |
| 22.7 | 04-15-2005 | Information Disclosure Statement (IDS) Filed | | | 0 |
| 22 | 04-15-2005 | Information Disclosure Statement (IDS) Filed | | | 0 |
| 21 | 03-15-2005 | Reference capture on IDS | | | 0 |
| 20.7 | 03-15-2005 | Information Disclosure Statement (IDS) Filed | | | 0 |
| 20 | 03-15-2005 | Information Disclosure Statement (IDS) Filed | | | 0 |
| 19 | 03-16-2005 | IFW TSS Processing by Tech Center Complete | | | 0 |
| 18 | 03-03-2005 | Preliminary Amendment | | | 0 |
| 17.7 | 03-01-2005 | Information Disclosure Statement (IDS) Filed | | | 0 |
| 17 | 03-01-2005 | Information Disclosure Statement (IDS) Filed | | | 0 |
| 16 | 08-23-2004 | Reference capture on IDS | | | 0 |
| 15.7 | 08-23-2004 | Information Disclosure Statement (IDS) Filed | | | 0 |
| 15 | 08-23-2004 | Information Disclosure Statement (IDS) Filed | | | 0 |
| 14.7 | 10-14-2004 | Information Disclosure Statement (IDS) Filed | | | 0 |
| 14 | 10-14-2004 | Information Disclosure Statement (IDS) Filed | | | 0 |
| 13 | 07-07-2004 | Preliminary Amendment | | | 0 |
| 12 | 07-20-2004 | Case Docketed to Examiner in GAU | | | 0 |
| 11 | 07-07-2004 | Workflow incoming amendment IFW | | | 0 |
| 10 | 10-31-2003 | Application Dispatched from OIPE | | | 0 |
| 9 | 11-03-2003 | Application Is Now Complete | | | 0 |
| 8 | 09-15-2003 | Additional Application Filing Fees | | | 0 |
| 7 | 09-15-2003 | A statement by one or more inventors satisfying the requirement under 35 USC 115, Oath of the Applic | | | 0 |
| 6 | 07-25-2003 | Notice Mailed--Application Incomplete--Filing Date Assigned | | | 0 |
| 4 | 06-04-2003 | Cleared by L&R (LARS) | | | 0 |
| 3 | 06-03-2003 | IFW Scan & PACR Auto Security Review | | | 0 |
| | 05-29- | | | | |

| | | | |
|---|---|---|---|
| 2 | 2003 | IFW Scan & PACR Auto Security Review | 0 |
| 1 | 05-15-2003 | Initial Exam Team nn | 0 |
| 0.5 | 05-15-2003 | Filing date | 0 |

*If you need help:*

- *Call the Patent Electronic Business Center at (866) 217-9197 (toll free) or e-mail EBC@uspto.gov for specific questions about Patent Application Information Retrieval (PAIR).*
- *Send general questions about USPTO programs to the USPTO Contact Center (UCC).*
- *If you experience technical difficulties or problems with this application, please report them via e-mail to Electronic Business Support or call 1 800-786-9199.*

You can suggest USPTO webpages or material you would like featured on this section by E-mail to the webmaster@uspto.gov. While we cannot promise to accommodate all requests, your suggestions will be considered and may lead to other improvements on the website.

UNITED STATES PATENT AND TRADEMARK OFFICE

Commissioner for Patents
United States Patent and Trademark Office
P.O. Box 1450
Alexandria, VA 22313-1450
www.uspto.gov

MAILED

OCT 08 2010

OFFICE OF PETITIONS

GREENBERG TRAURIG, LLP
200 PARK AVE.
P.O. BOX 677
FLORHAM PARK NJ 07932

| | | |
|---|---|---|
| In re Application of Truncale et al. | : | |
| Application No. 10/438,883 | : | Decision on Petition |
| Filing Date: May 16, 2003 | : | |
| Attorney Docket No. 103248.010400 | : | |

This is a decision on the petition under 37 C.F.R. § 1.182, filed April 26, 2010, which requests the terminal disclaimer filed February 7, 2005, be withdrawn.

The petition is **granted**.

Facts

The instant application was filed May 16, 2003, with 48 claims.

Application No. 10/815,778 was filed April 2, 2004.

The inventors of record for Application No. 10/815,778 are the inventors of record for the instant application and Gordana Vunjak-Novakovic.

The inventors of record in the instant case have assigned all their rights to the instant application and to Application No. 10/815,778 to the Musculoskeletal Transplant Foundation ("MTF"). Inventor Vunjak-Novakovic has assigned her rights to Application No. 10/815,778 to the Massachusetts Institute of Technology.

The Office mailed a non-final Office action in the instant application on November 5, 2004. The Office action stated,

> Claims 1-2, 9-10, 12 and 15 are provisionally rejected under the judicially created doctrine of obviousness-type double patenting as being unpatentable over claims 1, 2, 6, 8, and 11 of copending Application No. 10/815,778.

A reply to the November 5, 2004 Office action was filed February 7, 2005. The reply was accompanied by a terminal disclaimer filed in order to overcome the provisional double patenting rejection.

The February 7, 2005 terminal disclaimer stated, with emphasis in the original,

> The owner, [MTF], of 100 percent interest in the application hereby disclaims ... the terminal part of the statutory term of any patent granted on pending **reference** Application Number 10/815,778, filed on April 2, 2004.... The owner hereby agrees that any patent so granted on the instant application shall be enforceable only for and during such period that it and any patent granted on the **reference** application are commonly owned.

The terminal disclaimer was signed by John S. Hale, an attorney of record.

Since the date the terminal disclaimer was filed, Claims 1-2, 9-10, 12 and 15 in the instant application and Claims 1, 2, 6, 8, and 11 in Application No. 10/815,778 have been withdrawn.

The instant petition and a request for continued examination were filed April 26, 2010. The petition requests the February 7, 2005 terminal disclaimer be withdrawn.

The petition asserts the applications are not commonly owned and have never been commonly owned. The petition indicates the claimed inventions in the two applications are not the result of activities undertaken within the scope of a joint research agreement.

## Discussion

Based on the facts in this case, the terminal disclaimer filed on February 7, 2005, is withdrawn.

It should be noted that this decision is not a determination that the subject matter of the current claims is distinct from the claims in the patents and/or applications to which the terminal disclaimer applied.[1]

Technology Center Art Unit 3775 will be informed of the instant decision and the application will be further examined in due course.

Telephone inquiries regarding this communication should be directed to Petitions Attorney Steven Brantley at (571) 272-3203.

Charles Steven Brantley
Senior Petitions Attorney
Office of Petitions

[1] It is the long-established policy of the Patent and Trademark Office to maintain the line of demarcation between petitionable and appealable subject matter. MPEP 1201. When the question of whether or not a given set of claims in one application or patent is distinct, or lies within the aegis of 35 USC 121, from another set of claims in another application or patent with respect to obviousness double patenting arises, that question relates to the merits of an invention, and the appropriate remedy for resolution of that issue ultimately lies by appeal as provided by statute. *See e.g. In re Longi*, 759 F.2d 887, 225 USPQ 645 (Fed. Cir. 1985). The Commissioner will not, on petition, usurp the functions or impinge upon the jurisdiction of the Board. *See In re Dickerson*, 299 F.2d 954, 958, 133 USPQ 39, 43 (CCPA 1962); *Bayley's Restaurant v. Bailey's of Boston, Inc.*, 170 USPQ 43, 44 (Comm'r Pat. 1971).

UNITED STATES PATENT AND TRADEMARK OFFICE

Commissioner for Patents
United States Patent and Trademark Office
P.O. Box 1450
Alexandria, VA 22313-1450
www.uspto.gov

In re Patent No. 6958097
Issue Date: October 25,2005
Application No. 10439090
Filed: May 14,2003
Attorney Docket No. (H)03SGL0171USP

:
:DECISION GRANTING PETITION
:UNDER 37 CFR 1.378(c)
:

This is a decision on the electronic petition, filed January 4,2011 ,under 37 CFR 1.378(c) to accept the unintentionally delayed payment of the 3.5 year maintenance fee for the above-identified patent.

The petition is **GRANTED**.

The maintenance fee is accepted, and the above-identified patent reinstated as of January 4,2011 . This decision also constitutes notice that the fee has been accepted. An electronic copy of the petition and this decision has been created as an entry in the Image File Wrapper. Nevertheless, petitioner should print and retain an independent copy.

Telephone inquiries related to this electronic decision should be directed to the Electronic Business Center at 1-866-217-9197.

PTO/SB/66 (03-09)
Approved for use through 03/31/2012. OMB 0651-0016
U.S. Patent and Trademark Office: U.S. DEPARTMENT OF COMMERCE
Under the Paperwork Reduction Act of 1995, no persons are required to respond to a collection of information unless it displays valid OMB control number.

# PETITION TO ACCEPT UNINTENTIONALLY DELAYED PAYMENT OF MAINTENANCE FEE IN AN EXPIRED PATENT (37 CFR 1.378(c))

| Patent Number | Issue Date (YYYY-MM-DD) | Application Number | Filing Date (YYYY-MM-DD) | Docket Number (if applicable) |
|---|---|---|---|---|
| 6958097 | 2005-10-25 | 10439090 | 2003-05-14 | HKH-120 |

CAUTION: Maintenance fee (and surcharge, if any) payment must correctly identify: (1) the patent number and (2) the application number of the actual U.S. application leading to issuance of that patent to ensure the fee(s) is/are associated with the correct patent. 37 CFR 1.366(c) and (d).

SMALL ENTITY
☐ Patentee claims, or has previously claimed, small entity status. See 37 CFR 1.27.

LOSS OF ENTITLEMENT TO SMALL ENTITY STATUS
☐ Patentee is no longer entitled to small entity status. See 37 CFR 1.27(g)

| NOT Small Entity | | | Small Entity | | |
|---|---|---|---|---|---|
| | Fee | Code | | Fee | Code |
| ◉ | 3 ½ year | (1551) | ◯ | 3 ½ year | (2551) |
| ◯ | 7 ½ year | (1552) | ◯ | 7 ½ year | (2552) |
| ◯ | 11 ½ year | (1553) | ◯ | 11 ½ year | (2553) |

SURCHARGE
The surcharge required by 37 CFR 1.20(i)(2) (Fee Code 1558) must be paid as a condition of accepting unintentionally delayed payment of the maintenance fee.

MAINTENANCE FEE (37 CFR 1.20(e)-(g))
The appropriate maintenance fee must be submitted with this petition.

STATEMENT
THE UNDERSIGNED CERTIFIES THAT THE DELAY IN PAYMENT OF THE MAINTENANCE FEE TO THIS PATENT WAS UNINTENTIONAL

PETITIONER(S) REQUEST THAT THE DELAYED PAYMENT OF THE MAINTENANCE FEE BE ACCEPTED AND THE PATENT REINSTATED

THIS PORTION MUST BE COMPLETED BY THE SIGNATORY OR SIGNATORIES

37 CFR 1.378(d) states: "Any petition under this section must be signed by an attorney or agent registered to practice before the Patent and Trademark Office, or by the patentee, the assignee, or other party in interest."

I certify, in accordance with 37 CFR 1.4(d)(4) that I am

◉ An attorney or agent registered to practice before the Patent and Trademark Office

◯ A sole patentee

◯ A joint patentee; I certify that I am authorized to sign this submission on behalf of all the other patentees.

◯ A joint patentee; all of whom are signing this e-petition

◯ The assignee of record of the entire interest

Under the Paperwork Reduction Act of 1995, no persons are required to respond to a collection of information unless it displays valid OMB control number.

| Patent Practitioner | | | |
|---|---|---|---|
| A signature of the applicant or representative is required in accordance with 37 CFR 1.33 and 10.18. Please see 37 CFR 1.4(d) for the form of the signature | | | |
| Signature | /klaus p stoffel/ | Date (YYYY-MM-DD) | 2011-01-04 |
| Name | Klaus P. Stoffel | Registration Number | 31668 |

This collection of information is required by 37 CFR 1.378(c). The information is required to obtain or retain a benefit by the public which is to file (and by the USPTO to process) an application. Confidentiality is governed by 35 U.S.C. 122 and 37 CFR 1.11 and 1.14. This collection is estimated to take 1 hour to complete, including gathering, preparing, and submitting the completed application form to the USPTO. Time will vary depending upon the individual case. Any comments on the amount of time you require to complete this form and/ or suggestions for reducing this burden, should be sent to the Chief Information Officer, U.S. Patent and Trademark Office, U.S. Department of Commerce, P.O. Box 1450, Alexandria, VA 22313-1450. DO NOT SEND FEES OR COMPLETED FORMS TO THIS ADDRESS. **This form can only be used when in conjunction with EFS-Web. If this form is mailed to the USPTO, it may cause delays in reinstating the patent.**

# Privacy Act Statement

The Privacy Act of 1974 (P.L. 93-579) requires that you be given certain information in connection with your submission of the attached form related to a patent application or patent. Accordingly, pursuant to the requirements of the Act, please be advised that: (1) the general authority for the collection of this information is 35 U.S.C. 2(b)(2); (2) furnishing of the information solicited is voluntary; and (3) the principal purpose for which the information is used by the U.S. Patent and Trademark Office is to process and/or examine your submission related to a patent application or patent. If you do not furnish the requested information, the U.S. Patent and Trademark Office may not be able to process and/or examine your submission, which may result in termination of proceedings or abandonment of the application or expiration of the patent.

The information provided by you in this form will be subject to the following routine uses:

1. The information on this form will be treated confidentially to the extent allowed under the Freedom of Information Act (5 U.S.C. 552) and the Privacy Act (5 U.S.C. 552a). Records from this system of records may be disclosed to the Department of Justice to determine whether the Freedom of Information Act requires disclosure of these records.

2. A record from this system of records may be disclosed, as a routine use, in the course of presenting evidence to a court, magistrate, or administrative tribunal, including disclosures to opposing counsel in the course of settlement negotiations.

3. A record in this system of records may be disclosed, as a routine use, to a Member of Congress submitting a request involving an individual, to whom the record pertains, when the individual has requested assistance from the Member with respect to the subject matter of the record.

4. A record in this system of records may be disclosed, as a routine use, to a contractor of the Agency having need for the information in order to perform a contract. Recipients of information shall be required to comply with the requirements of the Privacy Act of 1974, as amended, pursuant to 5 U.S.C. 552a(m).

5. A record related to an International Application filed under the Patent Cooperation Treaty in this system of records may be disclosed, as a routine use, to the International Bureau of the World Intellectual Property Organization, pursuant to the Patent Cooperation Treaty.

6. A record in this system of records may be disclosed, as a routine use, to another federal agency for purposes of National Security review (35 U.S.C. 181) and for review pursuant to the Atomic Energy Act (42 U.S.C. 218(c)).

7. A record from this system of records may be disclosed, as a routine use, to the Administrator, General Services, or his/her designee, during an inspection of records conducted by GSA as part of that agency's responsibility to recommend improvements in records management practices and programs, under authority of 44 U.S.C. 2904 and 2906. Such disclosure shall be made in accordance with the GSA regulations governing inspection of records for this purpose, and any other relevant (i.e., GSA or Commerce) directive. Such disclosure shall not be used to make determinations about individuals.

8. A record from this system of records may be disclosed, as a routine use, to the public after either publication of the application pursuant to 35 U.S.C. 122(b) or issuance of a patent pursuant to 35 U.S.C. 151. Further, a record may be disclosed, subject to the limitations of 37 CFR 1.14, as a routine use, to the public if the record was filed in an application which became abandoned or in which the proceedings were terminated and which application is referenced by either a published application, an application open to public inspections or an issued patent.

9. A record from this system of records may be disclosed, as a routine use, to a Federal, State, or local law enforcement agency, if the USPTO becomes aware of a violation or potential violation of law or regulation.

UNITED STATES PATENT AND TRADEMARK OFFICE

Commissioner for Patents
United States Patent and Trademark Office
P.O. Box 1450
Alexandria, VA 22313-1450
www.uspto.gov
DIW Aug-10

LEONARD TACHNER, A PROFESSIONAL LAW
CORPORATION
17961 SKY PARK CIRCLE, SUITE 38-E
IRVINE CA 92614

MAILED
AUG 05 2010
OFFICE OF PETITIONS

| | | |
|---|---|---|
| In re Application of | : | |
| Leslie D. Robbins | : | |
| Application Number: 10/439144 | : | ON PETITION |
| Filing Date: 05/16/2003 | : | |
| Attorney Docket Number: | : | |
| ROBBINS-3 | : | |

This is a decision on the petition filed on May 7, 2010, under 37 CFR 1.137(a),[1] to revive the above-identified application.

The petition is **dismissed**.

Any request for reconsideration of this decision must be submitted within **TWO (2) MONTHS** from the mail date of this decision. Extensions of time under 37 CFR 1.136(a) are permitted. The reconsideration request should include a cover

[1] A grantable petition under 37 CFR 1.137(a) must be accompanied by:

(1) the required reply, unless previously filed; In a nonprovisional application abandoned for failure to prosecute, the required reply may be met by the filing of a continuing application. In a nonprovisional utility or plant application filed on or after June 8, 1995, and abandoned for failure to prosecute, the required reply may also be met by the filing of a request for continued examination in compliance with § 1.114. In an application or patent, abandoned or lapsed for failure to pay the issue fee or any portion thereof, the required reply must be the payment of the issue fee or any outstanding balance thereof. In an application, abandoned for failure to pay the publication fee, the required reply must include payment of the publication fee.

(2) the petition fee as set forth in 37 CFR 1.17(l);

(3) a showing to the satisfaction of the Director that the entire delay in filing the required reply from the due date for the reply until the filing of a grantable petition pursuant to 37 CFR 1.137(a) was unavoidable; and

(4) any terminal disclaimer (and fee as set forth in 37 CFR 1.20(d)) required pursuant to 37 CFR 1.137(c)).

letter entitled "Renewed Petition under 37 CFR 1.137(a)" or, as discussed below, "Petition under 37 CFR 1.137(b)."
The application became abandoned November 26, 2004, for failure to timely submit the issue and publication fees in response to the Notice of Allowance and Fee(s) Due mailed on August 25, 2004, which set a three (3)-month statutory period for reply. Notice of Abandonment was mailed on January 10, 2005.

Petitioner's counsel states that the abandonment was unavoidable due to an "ambiguous entry" in counsel's docket. Specifically, the "Pay Issue Fee" entry in counsel's docket was marked "Yes" to indicate that the client had provided authorization for counsel to pay the issue fee.

Petitioner's counsel states:

> In attempting to understand the reason why the issue fee for this application was not paid, it is my judgment that it was due to an ambiguous entry of the word "Yes" in our docket. Apparently, the entry of the word "Yes" was made by our docketing clerk to indicate that the client, Mr. Robbins, had given us the authorization to pay the fee in his behalf. However, it was subsequently misinterpreted to indicate, erroneously, that the issue fee had actually been paid.

The Director may revive an abandoned application if the delay in responding to the relevant outstanding Office requirement is shown to the satisfaction of the Director to be "unavoidable".[2] Decisions on reviving abandoned applications on the basis of "unavoidable" delay have adopted the reasonably prudent person standard in determining if the delay was unavoidable:

> The word 'unavoidable' . . . is applicable to ordinary human affairs, and requires no more or greater care or diligence than is generally used and observed by prudent and careful men in relation to their most important business. It permits them in the exercise of this care to rely upon the ordinary and trustworthy agencies of mail and telegraph, worthy and reliable employees, and such other means and instrumentalities as are usually employed in such important business. If unexpectedly, or through the unforeseen fault or imperfection of these agencies and instrumentalities, there occurs a failure, it may properly be said to be

[2] 35 U.S.C. § 133.

unavoidable, all other conditions of promptness in its rectification being present.[3]

The showing of record is inadequate to establish unavoidable delay within the meaning of 35 U.S.C. § 133 and 37 CFR 1.137(a).[5] Specifically, an application is "unavoidably" abandoned only where petitioner, or counsel for petitioner, takes all action necessary for a proper response to the outstanding Office action, but through the intervention of unforeseen circumstances, such as failure of mail, telegraph, facsimile, or the negligence of otherwise reliable employees, the response is not timely received in the Office.[4]

A delay resulting from an error (*e.g.*, a docketing error) on the part of an employee in the performance of a clerical function may provide the basis for a showing of "unavoidable" delay, provided it is shown that:

(1) the error was the cause of the delay at issue;

(2) there was in place a business routine for performing the clerical function that could reasonably be relied upon to avoid errors in its performance;

(3) and the employee was sufficiently trained and experienced with regard to the function and routine for its performance that reliance upon such employee represented the exercise of due care.[5]

An adequate showing requires:

(A) Statements by all persons with direct knowledge of the circumstances surrounding the delay, setting forth the facts as they know them.

---

[3] In re Mattullath, 38 App. D.C. 497, 514-15 (1912)(quoting Ex parte Pratt, 1887 Dec. Comm'r Pat. 31, 32-33 (1887)); see also Winkler v. Ladd, 221 F. Supp. 550, 552, 138 USPQ 666, 167-68 (D.D.C. 1963), aff'd, 143 USPQ 172 (D.C. Cir. 1963); Ex parte Henrich, 1913 Dec. Comm'r Pat. 139, 141 (1913). In addition, decisions on revival are made on a "case-by-case basis, taking all the facts and circumstances into account." Smith v. Mossinghoff, 671 F.2d 533, 538, 213 USPQ 977, 982 (D.C. Cir. 1982). Finally, a petition cannot be granted where a petitioner has failed to meet his or her burden of establishing that the delay was "unavoidable." Haines v. Quigg, 673 F. Supp. 314, 316-17, 5 USPQ2d 1130, 1131-32 (N.D. Ind. 1987).

[4] Ex parte Pratt, 1887 Dec. Comm'r Pat. 31 (Comm'r Pat. 1887).

[5] See MPEP 711.03(c)(III)(C)(2).

(B) Petitioner must supply a thorough explanation of the docketing and call-up system in use and must identify the type of records kept and the person responsible for the maintenance of the system. This showing must include copies of mail ledgers, docket sheets, filewrappers and such other records as may exist which would substantiate an error in docketing, and include an indication as to why the system failed to provide adequate notice that a reply was due.

(C) Petitioner must supply information regarding the training provided to the personnel responsible for the docketing error, degree of supervision of their work, examples of other work functions carried out, and checks on the described work which were used to assure proper execution of assigned tasks.

The present petition lacks the showing required by (1), (2), and (3) above.

At the outset, it is noted that petitioners have provided statements petitioner's registered patent practitioner, Leonard Tachner, as well as from counsel's Office Manager, Janis Foreman. It is noted, however, that in her declaration, Ms. Foreman states that the docket entry in question was made by counsel's docketing clerk. Petitioners, however, have not provided an affidavit or declaration of facts from the aforementioned docketing clerk regarding the docket entry in question. Petitioners must provide an affidavit or declaration of facts from all persons having first-hand knowledge of the circumstances surrounding the delay.

Furthermore, petitioners must supply a thorough explanation of the docketing and call-up system in use and must identify the type of records kept and the person responsible for the maintenance of the system. This showing must include copies of mail ledgers, docket sheets, filewrappers and such other records as may exist which would substantiate an error in docketing, and include an indication as to why the system failed to provide adequate notice that a reply was due.

Further, petitioner must supply information regarding the training provided to the personnel responsible for the docketing error, degree of supervision of their work, examples of other work functions carried out, and checks on the described work which were used to assure proper execution of assigned tasks. In particular, petitioner should address the protocol for indicating in the docket records that the client had authorized payment of an issue fee as opposed to indicating that the fee had actually been paid.

Lastly, a Notice of Abandonment was mailed on January 10, 2005. The present petition, however, was not filed until more than five (5) years after the mailing of the Notice of Abandonment. In this regard, petitioner states that the Notice of Abandonment was not located in counsel's file wrapper. As the showing of record indicates that a Notice of Abandonment was in fact mailed on January 10, 2005, and was not returned as undeliverable, the showing of record leads to a presumption that the Notice of Abandonment was properly received at the address of record. Accordingly, if petitioner believes that the Notice of Abandonment was not received, petitioner should provide evidence (*e.g.*, a copy of counsel's master docket record and a statement from counsel attesting that a search of the file jacket and docket record indicates that the Notice of Abandonment was not received).

In summary, the showing of record leads to a conclusion that rather than unavoidable delay, the application became abandoned because of a lack of a business routine for performing the clerical function that could reasonably be relied upon to avoid errors in its performance. Simply put, rather than unavoidable delay, the showing of record is that counsel's docketing system lacked the capacity to clearly differentiate between receipt of authorization from a client to pay the issue (and publication) fee(s), and submission of the issue (and publication) fee(s) payment to the USPTO. Any renewed petition must include a showing as to why petitioner's business routine, with regards to recording of an authorization to pay the issue fee, should not be considered to be a business routine for performing this clerical function which could be **not** reasonably relied upon to avoid errors in its performance.

**ALTERNATIVE VENUE**

Petitioner may wish to consider filing a renewed petition under 37 CFR 1.137(b), which now provides that where the delay in reply was unintentional, a petition may be filed to revive an abandoned application or a lapsed patent pursuant to 37 CFR 1.137(b). A grantable petition pursuant to 37 CFR 1.137(b) must be accompanied by:

(1) the required reply, unless previously filed. In a nonprovisional application abandoned for failure to prosecute, the required reply may be met by the filing of a continuing application. In a nonprovisional utility or plant application filed on or after 8 June, 1995, and abandoned for failure to prosecute, the required reply may also be met by the filing of a

request for continued examination in compliance with § 1.114. In an application or patent, abandoned or lapsed for failure to pay the issue fee or any portion thereof, the required reply must be the payment of the issue fee or any outstanding balance thereof. In an application, abandoned for failure to pay the publication fee, the required reply must include payment of the publication fee.

(2) the petition fee as set forth in 37 CFR 1.17(m);

(3) a statement that the entire delay in filing the required reply from the due date for the reply until the filing of a grantable petition pursuant to 37 CFR 1.137(b) was unintentional. The Director may required additional information where there is a question whether the delay was unintentional; and

(4) any terminal disclaimer (and fee as set forth in 37 CFR 1.20(d)) required pursuant to 37 CFR 1.137(c)).

The filing of a petition under the unintentional standard cannot be intentionally delayed and therefore should be filed promptly. A person seeking revival due to unintentional delay cannot make a statement that the delay was unintentional unless the entire delay, including the delay from the date it was discovered that the application was abandoned until the filing of the petition to revive under 37 CFR 1.137(b), was unintentional. A statement that the delay was unintentional is not appropriate if petitioner intentionally delayed the filing of a petition for revival under 37 CFR 1.137(b).

Further correspondence with respect to this matter should be addressed as follows:

By mail: Mail Stop Petition
Commissioner for Patents
P.O. Box 1450
Alexandria, VA 22313-1450

By FAX: (571) 273-8300
Attn: Office of Petitions

By hand: Customer Service Window
Mail Stop Petition
Randolph Building
401 Dulany Street
Alexandria, VA 22314

A reply may also be filed via EFS-Web.

Telephone inquiries concerning this matter may be directed to the undersigned at (571) 272-3231.

Douglas I. Wood
Senior Petitions Attorney
Office of Petitions

Encl: Form PTO/SB/64

UNITED STATES PATENT AND TRADEMARK OFFICE

Commissioner for Patents
United States Patent and Trademark Office
P.O. Box 1450
Alexandria, VA 22313-1450
www.uspto.gov
DIW Dec-10

LEONARD TACHNER, A PROFESSIONAL LAW
CORPORATION
17961 SKY PARK CIRCLE, SUITE 38-E
IRVINE CA 92614

**MAILED**

**DEC 02 2010**

**OFFICE OF PETITIONS**

| | |
|---|---|
| In re Application of | : |
| Leslie D. Robbins | : |
| Application Number: 10/439144 | : LETTER DISMISSING PETITION |
| Filing Date: 05/16/2003 | : |
| Attorney Docket Number: | : |
| ROBBINS-3 | : |

This is a decision in response to the paper styled as a petition under 37 CFR 1.137(b) filed on September 28, 2010, to revive the above-identified application.

The petition is **dismissed** for the reasons stated below.

Any request for reconsideration of this decision must be submitted within **TWO (2) MONTHS** from the mail date of this decision. **This time period is not extendable.**[1]

This application became abandoned on November 26, 2004, for failure to timely submit the issue and publication fees in response to the Notice of Allowance and Fee(s) Due mailed on August 25, 2004, which set a three (3)-month statutory period for reply. Notice of Abandonment was mailed on January 10, 2005. On May 7, 2010, a petition under 37 CFR 1.137(a) was filed. On August 5, 2010, the petition was dismissed.

A grantable petition filed under the provisions of 37 CFR 1.137(b) must be accompanied by:

(1) the required reply, unless previously filed. In a nonprovisional application abandoned for failure to prosecute,

[1] 37 CFR 1.181(f).

the required reply may be met by the filing of a continuing application. In a nonprovisional application filed on or after June 8, 1995, and abandoned for failure to prosecute, the required reply may also be met by the filing of a request for continued examination in compliance with § 1.114. In an application or patent, abandoned or lapsed for failure to pay the issue fee or any portion thereof, the required reply must be the payment of the issue fee or any outstanding balance thereof. In an application abandoned for failure to pay the publication fee, the required reply must include payment of the publication fee.

(2) the petition fee as set forth in 37 CFR 1.17(m);

(3) a statement that the entire delay in filing the required reply from the due date for the reply until the filing of a grantable petition pursuant to 37 CFR 1.137(b) was unintentional. The Director may required additional information where there is a question whether the delay was unintentional; and

(4) any terminal disclaimer (and fee as set forth in 37 CFR 1.20(d)) required pursuant to 37 CFR 1.137(c)).

The petition lacks item (2). The petition fee has not been paid and no authorization has been provided to charge counsel's deposit account in the amount of the petition fee.

As stated in MPEP 711.03(c):

> 35 U.S.C. 41(a)(7) provides that a petition for the revival of an unintentionally abandoned application or for the unintentionally delayed payment of the issue fee must be accompanied by the petition fee set forth in 37 CFR 1.17(m), unless the petition is filed under 35 U.S.C. 133 or 151 (on the basis of unavoidable delay), in which case the fee is set forth in 37 CFR 1.17(l). Thus, unless the circumstances warrant the withdrawal of the holding of abandonment (i.e., it is determined that the application is not properly held abandoned), the payment of a petition fee to obtain the revival of an abandoned application is a statutory prerequisite to revival of the abandoned application, and cannot be waived.
>
> In addition, the phrase "[o]n filing" in 35 U.S.C. 41(a)(7) means that the petition fee is required for the filing (and not merely the grant) of a petition under 37 CFR 1.137. See H.R. Rep. No. 542, 97th Cong.,

2d Sess. 6 (1982), reprinted in 1982 U.S.C.C.A.N. 770 ("[t]he fees set forth in this section are due on filing the petition"). Therefore, the Office: (A) will not refund the petition fee required by 37 CFR 1.17(l) or 1.17(m), regardless of whether the petition under 37 CFR 1.137 is dismissed or denied; and (B) will not reach the merits of any petition under 37 CFR 1.137 lacking the requisite petition fee.

A renewed petition, accompanied by the required fee, must be filed in order to revive the application.

By Mail: Mail Stop PETITION
Commissioner for Patents
P. O. Box 1450
Alexandria, VA 22313-1450

By hand: U. S. Patent and Trademark Office
Customer Service Window, Mail Stop Petitions
Randolph Building
401 Dulany Street
Alexandria, VA 22314

The centralized facsimile number is **(571) 273-8300**.

Correspondence regarding this decision may also be filed through the electronic filing system of the USPTO.

Telephone inquiries concerning this matter may be directed to the undersigned at (571)272-3231.

D Wood

Douglas I. Wood
Senior Petitions Attorney
Office of Petitions

UNITED STATES PATENT AND TRADEMARK OFFICE

Commissioner for Patents
United States Patent and Trademark Office
P.O. Box 1450
Alexandria, VA 22313-1450
www.uspto.gov
DIW Mar-11

LEONARD TACHNER, A PROFESSIONAL LAW CORPORATION
17961 SKY PARK CIRCLE, SUITE 38-E
IRVINE CA 92614

MAILED
MAR 08 2011
OFFICE OF PETITIONS

In re Application of :
Leslie D. Robbins :
Application Number: 10/439144 :
Filing Date: 05/16/2003 :
Attorney Docket Number: :
ROBBINS-3 :

ON PETITION

This is a decision in response to the paper styled as a petition under 37 CFR 1.137(b) filed on January 19, 2011, to revive the above-identified application.

The petition is **GRANTED**.

Any request for reconsideration of this decision must be submitted within **TWO (2) MONTHS** from the mail date of this decision. **This time period is not extendable.**[1]

This application became abandoned on November 26, 2004, for failure to timely submit the issue and publication fees in response to the Notice of Allowance and Fee(s) Due mailed on August 25, 2004, which set a three (3)-month statutory period for reply. Notice of Abandonment was mailed on January 10, 2005. On May 7, 2010, a petition under 37 CFR 1.137(a) was filed. On August 5, 2010, the petition was dismissed. The paper styled as a petition under 37 CFR 1.137(b), filed on September 28, 2010, was dismissed on December 2, 2010.

The application is referred to the Office of Data Management for processing into a patent.

Telephone inquiries concerning this matter may be directed to the undersigned at (571)272-3231.

D Wood
Douglas I. Wood
Senior Petitions Attorney
Office of Petitions

[1] 37 CFR 1.181(f).

UNITED STATES PATENT AND TRADEMARK OFFICE

Commissioner for Patents
United States Patent and Trademark Office
P.O. Box 1450
Alexandria, VA 22313-1450
www.uspto.gov

DARBY & DARBY, PC
P. O. BOX 770
CHURCH STREET STATION
NEW YORK, NY 10008-0770

MAILED
OCT 08 2010
OFFICE OF PETITIONS

| | | |
|---|---|---|
| In re Application of | : | |
| Rud Istvan, et al. | : | |
| Application No. 10/439,356 | : | DECISION GRANTING PETITION |
| Filed: May 16, 2003 | : | UNDER 37 CFR 1.313(c)(2) |
| Attorney Docket No. 21639/1211279-US2 | : | |

This is a decision on the petition under 37 CFR 1.313(c)(2), filed October 6, 2010, to withdraw the above-identified application from issue after payment of the issue fee.

The petition is **GRANTED**.

The above-identified application is withdrawn from issue for consideration of a submission under 37 CFR 1.114 (request for continued examination). *See* 37 CFR 1.313(c)(2).

***Petitioner is advised that the issue fee paid on October 1, 2010 cannot be refunded. If, however, this application is again allowed, petitioner may request that it be applied towards the issue fee required by the new Notice of Allowance.***[1]

The petition is not signed by an attorney of record. Nevertheless, in accordance with 37 CFR 1.34, the signature of Mr. Jeffrey L. Doyle appearing on the correspondence shall constitute a representation to the United States Patent and Trademark Office that he is authorized to represent the particular party on whose behalf he acts. If Mr. Doyle desires to receive future correspondence regarding this file, the appropriate power of attorney documents must be submitted. A courtesy copy of this decision is being mailed to petitioner herein. However, until otherwise instructed, all future correspondence regarding this application file will be directed solely to the above-noted correspondence address of record.

Telephone inquiries regarding this decision should be directed to undersigned at (571) 272-1642. All other inquiries concerning the examination or status of this application should be directed to the Technology Center.

---

[1] *The request to apply the issue fee to the new Notice may be satisfied by completing and returning the new Part B – Fee(s) Transmittal Form (along with any balance due at the time of submission). Petitioner is advised that the Issue Fee Transmittal Form must be completed and timely submitted to avoid abandonment of the application.*

This application is being referred to Technology Center AU 3762 for processing of the request for continued examination under 37 CFR 1.114 and for consideration of the concurrently filed amendment.

/AMW/
April M. Wise
Petitions Examiner
Office of Petitions

UNITED STATES PATENT AND TRADEMARK OFFICE

COMMISSIONER FOR PATENTS
UNITED STATES PATENT AND TRADEMARK OFFICE
P.O. BOX 1450
ALEXANDRIA, VA 22313-1450
www.uspto.gov

Paper No.

MCANDREWS HELD & MALLOY, LTD
500 WEST MADISON STREET
SUITE 3400
CHICAGO IL 60661

MAILED

AUG 30 2010

OFFICE OF PETITIONS

In re Application of MacInnis
Application No. 10/439,372
Filed: May 16, 2003
Atty Docket No. 13773US02
Title: SYSTEM, METHOD, AND APPARATUS FOR DECODING FLEXIBLY ORDERED MACROBLOCKS

ON APPLICATION FOR PATENT TERM ADJUSTMENT

This is in response to the "APPLICATION FOR RECONSIDERATION OF THE DETERMINATION OF PATENT TERM ADJUSTMENT UNDER 35 U.S.C. 154(b) ACCOMPANYING THE NOTICE OF ALLOWANCE (37 CFR § 1.705)," filed August 9, 2010. Applicant submits that the correct patent term adjustment to be indicated on the patent is one thousand, nine hundred and thirty-one (1931) days, not seven hundred and eighty-nine (789) days as calculated by the Office as of the mailing of the initial determination of patent term adjustment. Applicant requests this correction partly on the basis that the Office will take in excess of three years to issue this patent. In addition, Applicant contends that three periods of applicant delay was miscalculated.

To the extent that the instant application for patent term adjustment requests reconsideration of the patent term adjustment as it relates to the Office's failure to issue the patent within 3 years of the filing date, the application for patent term adjustment under 37 CFR 1.705(b) is **DISMISSED as PREMATURE**.

Knowledge of the actual date the patent issues is required to calculate the amount, if any, of additional patent term patentee is entitled to for Office failure to issue the patent within 3 years. See § 1.702(b). (This is true even where a request for continued examination (RCE) was filed). The computer will not

undertake the § 1.702(b) calculation until the actual date of issuance of the patent has been determined. Likewise, the computer will not calculate any further Office delay under § 1.702(a)(4) or applicant delay under § 1.704(c)(10) until the actual date of issuance of the patent has been determined. As such, the Office can not make a determination on the correctness of the patent term adjustment until the patent has issued.

Requesting reconsideration of the patent term adjustment to be indicated on the patent under 37 CFR 1.705(b) based on the initial determination of patent term adjustment and a projected issuance date of the patent (or even the filing date of the request for continued examination) is premature. Accordingly, it is appropriate to dismiss as premature such a request.

Rather than file an application for patent term adjustment under 37 CFR 1.705(b) contesting the 37 CFR 1.702(b) calculation at the time of the mailing of the notice of allowance, Applicant is advised that he may wait until the time of the issuance of the patent and file a request for reconsideration of the patent term adjustment pursuant to 37 CFR 1.705(d). As the USPTO does not calculate the amount of time earned pursuant to 37 CFR 1.702(b) until the time of the issuance of the patent, the Office will consider any request for reconsideration of the patent term adjustment due to an error in the calculation of 37 CFR 1.702(b) to be timely if the request for reconsideration is filed within two months of the issuance of the patent. However, as to all other bases for contesting the initial determination of patent term adjustment received with the notice of allowance, Applicant must timely file an application for patent term adjustment prior to the payment of the issue fee[1].

To the extent that Applicant otherwise requests reconsideration of the patent term adjustment at the time of the mailing of the

---

[1] For example, if applicant disputes both the calculation of patent term adjustment under 37 CFR 1.702(a)(1) for Office failure to mail a first Office action or notice of allowance not later than fourteen months after the date on which the application was filed and under 37 CFR 1.702(b) for Office failure to issue a patent within three years of the actual filing date of the application, then applicant must still timely file an application for patent term adjustment prior to the payment of the issue fee to contest the calculation of Office delay in issuing a first Office action or notice of allowance. See 37 CFR 1.705(b) and 35 U.S.C. 154(b)(3)(B). A dispute as to the calculation of the § 1.702(a)(1) period raised on request for reconsideration of patent term adjustment under 37 CFR 1.705(d) will be dismissed as untimely filed.

notice of allowance, the request is **GRANTED to the extent indicated herein**.

A Notice of Allowance and Fees Due was mailed on May 7, 2010, concurrently with a Determination of Patent Term Adjustment under 35 U.S.C. 154(b), which indicated that the "Patent Term Adjustment to date is 789 day(s)." The instant application for patent term adjustment was timely filed[2] on or before payment of the issue fee.

The record supports a conclusion that any patent issuing from this patent is not subject to a terminal disclaimer.

Applicant argues that three reductions were improper.

The first two periods that are in dispute involve similar issues, and therefore will be discussed together. Applicant argues that the one-day reduction that is associated with the filing of a response to a non-final Office action on May 4, 2009 is improper, and that no reduction is warranted. Applicant further argues that the two-day reduction associated with the filing of a response to a non-final Office action on November 2, 2009 is improper, and that no reduction is warranted.

Rule 1.704(b) sets forth, *in pertinent part*:

> an applicant shall be deemed to have failed to engage in reasonable efforts to conclude processing or examination of an application for the cumulative total of any periods of time in excess of three months that are taken to reply to any notice or action by the Office making any rejection, objection, argument, or other request, measuring such three-month period from the date the notice or action was mailed or given to the applicant, in which case the period of adjustment set forth in § 1.703 shall be reduced by the number of days, if any, beginning on the day after the date that is three months after the date of mailing or transmission of the Office communication notifying the applicant of the rejection, objection, argument, or other request and ending on the date the reply was filed. The period, or shortened statutory period, for reply that is set in the Office action or notice has no effect on the three-month period set forth in this paragraph.

A non-final Office action was mailed on February 3, 2009, and a response was not received until May 4, 2009, which is three

[2] PALM records indicate that the issue fee was concurrently submitted with this petition on August 9, 2010.

months and one day later. As such, a reduction of one day was assessed. Applicant has argued that this is improper, that no reduction was warranted, and has cited to 37 CFR § 1.7(a). It is noted that May 3, 2009 fell on a Sunday, and as such, May 4, 2009 was the next succeeding business day.

Similarly, a non-final Office action was mailed on July 31, 2009, and a response was not received until November 2, 2009, which is three months and two days later. As such, a reduction of two days was assessed. Applicant has argued that this is improper, that no reduction was warranted, and has cited to 37 CFR § 1.7(a). It is noted that October 31, 2009 fell on a Saturday, and as such, November 2, 2009 was the next succeeding business day.

However, Applicant will note that 35 U.S.C. 154(b)(2)(C)(ii)[3] does not require that a reply be filed in the Office within its three (3) month grace period, but simply specifies that there is a patent term adjustment reduction if a reply is not filed within this three (3) month period. Therefore, the "carry-over" provisions of 35 U.S.C. § 21(b)[4] does not apply to the three (3) month period in 35 U.S.C. 154(b)(2)(C)(ii).

It follows that both the aforementioned one-day and two-day reductions were warranted.

Regarding the third period which is in dispute, Applicant argues that the 183-day reduction that is associated with the filing of a Pre-Appeal Brief Request for Review on December 12, 2007 is longer than that which is warranted, and that the reduction should total 30 days.

Applicant's argument pertaining to the 183-day reduction has been considered, and has been deemed to be persuasive. A final Office action was mailed on March 12, 2007, and an after-final

---

[3] "With respect to adjustments to patent term made under the authority of paragraph (1)(B), an applicant shall be deemed to have failed to engage in reasonable efforts to conclude processing or examination of an application for the cumulative total of any periods of time in excess of 3 months that are taken to respond to a notice from the Office making any rejection, objection, argument, or other request, measuring such 3-month period from the date the notice was given or mailed to the applicant."

[4] "When the day, or the last day, for taking any action or paying any fee in the United States Patent and Trademark Office falls on Saturday, Sunday, or a Federal holiday within the District of Columbia, the action may be taken, or fee paid, on the next succeeding secular or business day."

amendment was received on May 10, 2007. An advisory action was mailed on June 19, 2007, and a notice of appeal was filed on July 12, 2007, which is three months and 30 day after the mailing of the final Office action. This constitutes 30 days of applicant delay.

The 183-day reduction has been removed, and a 30-day reduction has been entered.

As such, the patent term adjustment is increased by 942 (1021 days of examination delay minus 79 days of applicant delay) days, not 1931 days.

The Office has updated the PAIR screen to reflect that the correct Patent Term Adjustment (PTA) determination at the time of the mailing of the notice of allowance is **nine hundred and forty-two (942)** days. A copy of the updated PAIR screen, showing the correct determination, is enclosed.

The Office acknowledges submission of the $200.00 fee set forth in 37 CFR 1.18(e). No additional fees are required.

Any request for reconsideration of the patent term adjustment indicated on the patent must be timely filed within 2 months after issuance pursuant to 37 CFR 1.705(d) and must include payment of the required fee under 37 CFR 1.18(e).

Applicant is reminded that any delays by the Office pursuant to 37 CFR 1.702(a)(4) and 1.702(b) and any applicant delays under 37 CFR 1.704(c)(10) will be calculated at the time of the issuance of the patent and Applicant will be notified of the revised patent term adjustment to be indicated on the patent in the Issue Notification letter that is mailed to applicants approximately three weeks prior to issuance.

The Office of Data Management has been advised of this decision. This matter is being referred to the Office of Data Management for issuance of the patent.

Telephone inquiries regarding this decision should be directed to Senior Attorney Paul Shanoski at (571) 272-3225.

Anthony Knight
Director
Office of Petitions

Encl. Copy of the Revised Patent Term Adjustment

Day : Friday
Date: 8/27/2010

# PALM INTRANET

Time: 13:41:03

| PTA Calculations for Application: 10/439372 | | | |
|---|---|---|---|
| Application Filing Date: | 05/16/2003 | PTO Delay (PTO): | 1021 |
| Issue Date of Patent: | | Three Years: | 0 |
| Pre-Issue Petitions: | 0 | Applicant Delay (APPL): | 232 |
| Post-Issue Petitions: | 0 | Total PTA (days): | 942 |
| PTO Delay Adjustment: | 153 | | |

**File Contents History**

| Number | Date | Contents Description | PTO | APPL | START |
|---|---|---|---|---|---|
| 78 | 08/27/2010 | ADJUSTMENT OF PTA CALCULATION BY PTO | 153 | | |
| 69 | 05/07/2010 | MAIL NOTICE OF ALLOWANCE | | | |
| 68 | 05/06/2010 | ISSUE REVISION COMPLETED | | | |
| 67 | 05/06/2010 | DOCUMENT VERIFICATION | | | |
| 66 | 05/06/2010 | NOTICE OF ALLOWANCE DATA VERIFICATION COMPLETED | | | |
| 65 | 05/04/2010 | NOTICE OF ALLOWABILITY | | | |
| 62 | 04/07/2010 | DATE FORWARDED TO EXAMINER | | | |
| 61 | 04/05/2010 | AMENDMENT AFTER FINAL REJECTION | | | |
| 60 | 11/18/2009 | ELECTRONIC INFORMATION DISCLOSURE STATEMENT | | 16 | 54 |
| 59 | 02/04/2010 | MAIL FINAL REJECTION (PTOL - 326) | | | |
| 58 | 02/01/2010 | FINAL REJECTION | | | |
| 57 | 11/18/2009 | INFORMATION DISCLOSURE STATEMENT CONSIDERED | | | |
| 56 | 11/18/2009 | INFORMATION DISCLOSURE STATEMENT (IDS) FILED | | | |
| 55 | 11/13/2009 | DATE FORWARDED TO EXAMINER | | | |
| 54 | 11/02/2009 | RESPONSE AFTER NON-FINAL ACTION | | 2 | 53 |
| 53 | 07/31/2009 | MAIL NON-FINAL REJECTION | | | |
| 52 | 07/31/2009 | NON-FINAL REJECTION | | | |
| 51 | 05/21/2009 | DATE FORWARDED TO EXAMINER | | | |
| 50 | 05/04/2009 | RESPONSE AFTER NON-FINAL ACTION | | 1 | 49 |
| 49 | 02/03/2009 | MAIL NON-FINAL REJECTION | 265 | | 38 |
| 48 | 02/02/2009 | NON-FINAL REJECTION | | | |
| 47 | 11/26/2008 | APPEAL BRIEF REVIEW COMPLETE | | | |
| 46 | 11/26/2008 | DATE FORWARDED TO EXAMINER | | | |

| | | | | | |
|---|---|---|---|---|---|
| 45 | 11/17/2008 | APPEAL BRIEF FILED | | | |
| 44 | 10/17/2008 | NOTICE -- DEFECTIVE APPEAL BRIEF | | | |
| 42 | 02/12/2008 | MAIL APPEALS CONF. REQUEST DEFECTIVE | | | |
| 41 | 02/12/2008 | PRE-APPEALS CONFERENCE DECISION - REQUEST DEFECTIVE | | | |
| 40 | 01/31/2008 | APPEAL BRIEF REVIEW COMPLETE | | | |
| 39 | 01/31/2008 | DATE FORWARDED TO EXAMINER | | | |
| 38.1 | 01/14/2008 | DEFECTIVE / INCOMPLETE APPEAL BRIEF FILED | | | |
| 38 | 01/14/2008 | APPEAL BRIEF FILED | | | |
| 37 | 12/12/2007 | REQUEST FOR PRE-APPEAL CONFERENCE FILED | | | |
| 36 | 12/12/2007 | NOTICE OF APPEAL FILED | | 183 | 29 |
| 35 | 12/12/2007 | REQUEST FOR EXTENSION OF TIME - GRANTED | | | |
| 34 | 07/12/2007 | NOTICE OF APPEAL FILED | | | |
| 33 | 06/19/2007 | MAIL ADVISORY ACTION (PTOL - 303) | | | |
| 32 | 06/11/2007 | ADVISORY ACTION (PTOL-303) | | | |
| 31 | 05/14/2007 | DATE FORWARDED TO EXAMINER | | | |
| 30 | 05/10/2007 | AMENDMENT AFTER FINAL REJECTION | | | |
| 29 | 03/12/2007 | MAIL FINAL REJECTION (PTOL - 326) | | | |
| 28 | 03/05/2007 | FINAL REJECTION | | | |
| 27 | 12/21/2006 | DATE FORWARDED TO EXAMINER | | | |
| 26 | 12/11/2006 | RESPONSE AFTER NON-FINAL ACTION | | 30 | 24 |
| 25 | 12/11/2006 | REQUEST FOR EXTENSION OF TIME - GRANTED | | | |
| 24 | 08/11/2006 | MAIL NON-FINAL REJECTION | 756 | | -1 |
| 23 | 08/07/2006 | NON-FINAL REJECTION | | | |
| 22 | 03/21/2006 | CASE DOCKETED TO EXAMINER IN GAU | | | |
| 21 | 01/30/2006 | CASE DOCKETED TO EXAMINER IN GAU | | | |
| 20 | 01/30/2006 | CASE DOCKETED TO EXAMINER IN GAU | | | |
| 19 | 01/30/2006 | CASE DOCKETED TO EXAMINER IN GAU | | | |
| 18 | 06/07/2005 | CASE DOCKETED TO EXAMINER IN GAU | | | |
| 16 | 11/15/2004 | MISCELLANEOUS INCOMING LETTER | | | |
| 15 | 03/07/2005 | CASE DOCKETED TO EXAMINER IN GAU | | | |
| 14 | 11/15/2004 | IFW TSS PROCESSING BY TECH CENTER COMPLETE | | | |
| 13 | 11/15/2004 | CASE DOCKETED TO EXAMINER IN GAU | | | |
| 12 | 12/30/2003 | APPLICATION IS NOW COMPLETE | | | |

| | | | | | |
|---|---|---|---|---|---|
| 11 | 12/29/2003 | APPLICATION RETURN FROM OIPE | | | |
| 10 | 12/30/2003 | APPLICATION IS NOW COMPLETE | | | |
| 9 | 11/17/2003 | ADDITIONAL APPLICATION FILING FEES | | | |
| 8 | 11/17/2003 | APPLICANT HAS SUBMITTED NEW DRAWINGS TO CORRECT CORRECTED PAPERS PROBLEMS | | | |
| 7 | 07/14/2003 | CORRECTED PAPER | | | |
| 6 | 07/14/2003 | PRE-EXAM OFFICE ACTION WITHDRAWN | | | |
| 5 | 07/14/2003 | APPLICATION RETURN TO OIPE | | | |
| 4 | 07/14/2003 | APPLICATION DISPATCHED FROM OIPE | | | |
| 3 | 07/14/2003 | APPLICATION IS NOW COMPLETE | | | |
| 2 | 05/31/2003 | IFW SCAN & PACR AUTO SECURITY REVIEW | | | |
| 1 | 05/16/2003 | INITIAL EXAM TEAM NN | | | |

**Search Another: Application#** [ ] Search

**EXPLANATION OF PTA CALCULATION**

**EXPLANATION OF PTE CALCULATION**

To go back, right click here and select Back. To go forward, right click here and select Forward. To refresh, right click here and select Refresh.

Back to OASIS | Home page

## SPE RESPONSE FOR CERTIFICATE OF CORRECTION

**Paper No.:** _____

**DATE** : 12/08/2010

**TO SPE OF** : ART UNIT 1648

**SUBJECT** : Request for Certificate of Correction for Appl. No 10/440,073.: 7189536

Please respond to this request for a certificate of correction within 7 days.

**FOR IFW FILES:**

Please review the requested changes/corrections as shown in the **COCIN** document(s) in the IFW application image. No new matter should be introduced, nor should the scope or meaning of the claims be changed.

Please complete the response (see below) and forward the completed response to scanning using document code **COCX**.

**FOR PAPER FILES:**

Please review the requested changes/corrections as shown in the attached certificate of correction. Please complete this form (see below) and forward it with the file to:

**Certificates of Correction Branch (CofC)**

**Should the change(s) Be made?**

**RoChaun Johnson**
**Certificates of Correction Branch**
**571 272-0470**

**Thank You For Your Assistance**

**The request for issuing the above-identified correction(s) is hereby:**
Note your decision on the appropriate box.

- [x] **Approved** — **All** changes apply.
- [ ] **Approved in Part** — Specify below which changes **do not** apply.
- [ ] **Denied** — State the reasons for denial below.

**Comments:** _____

/Zachariah Lucas/ — **SPE**

1648 — **Art Unit**

UNITED STATES PATENT AND TRADEMARK OFFICE

Commissioner for Patents
United States Patent and Trademark Office
P.O. Box 1450
Alexandria, VA 22313-1450
www.uspto.gov
DIW Jan-11

Paper No.

JUAN CARLOS A. MARQUEZ
C/O STITES & HARBISON PLLC
1199 NORTH FAIRFAX STREET
SUITE 900
ALEXANDRIA VA 22314-1437

**MAILED**

**JAN 13 2011**

**OFFICE OF PETITIONS**

| | | |
|---|---|---|
| In re Patent Number: 6,819,301 | : | |
| Issue Date: 11/16/2004 | : | LETTER |
| Application Number: 10/440,082 | : | |
| Filing Date: 05/19/2003 | : | |
| Attorney Docket Number: | : | |
| HITA.0385 | : | |

This is a decision on the petition filed on November 9, 2010, styled under 37 CFR 1.137(b), which is treated as a petition under 37 CFR 1.378(c), to accept the unintentionally delayed payment of a maintenance fee for the above-identified patent.

The petition is **dismissed** for the reason stated below.

The petition form is not properly signed in that the typed or printed name of the registered patent practitioner signing the petition has not been provided. 37 CFR 1.34 requires that the typed or printed name of the attorney or agent signing be provided as well as the signature if the attorney or agent is not of record. A review of Office records does not indicate that that Douglas Jackson, Reg. No. 28,518, the patent practitioner who signed the petition form, is an attorney or agent of record in this patent.

A properly signed petition form must be filed.

Reciept of the fee payment of $2,600.00 is acknowledged.

A reply to this communication should be submitted within ONE (1) MONTH of receipt of this communication. This time period may not be extended. See 37 CFR 1.181.

Further correspondence with respect to this matter should be addressed as follows:

By mail: Mail Stop PETITIONS
Commissioner for Patents
Post Office Box 1450
Alexandria, VA 22313-1450

By hand: Customer Service Window
Mail Stop Petitions
Randolph Building
401 Dulany Street
Alexandria, VA 22314

By fax: (571) 273-8300
ATTN: Office of Petitions

A reply may also be filed via EFS-Web.

Telephone inquiries related to this decision should be directed to the undersigned at (571) 272-3231.

D Wood

Douglas I. Wood
Senior Petitions Attorney
Office of Petitions

Encl: PTO/SB/66

UNITED STATES PATENT AND TRADEMARK OFFICE

Commissioner for Patents
United States Patent and Trademark Office
P.O. Box 1450
Alexandria, VA 22313-1450
www.uspto.gov
DIW Mar-11

Paper No.

JUAN CARLOS A. MARQUEZ
C/O STITES & HARBISON PLLC
1199 NORTH FAIRFAX STREET
SUITE 900
ALEXANDRIA VA 22314-1437

MAILED
MAR 15 2011
OFFICE OF PETITIONS

| | | |
|---|---|---|
| In re Patent Number: 6,819,301 | : | |
| Issue Date: 11/16/2004 | : | |
| Application Number: 10/440,082 | : | ON PETITION |
| Filing Date: 05/19/2003 | : | |
| Attorney Docket Number: | : | |
| HITA.0385 | : | |

This is a decision on the renewed petition under 37 CFR 1.378(c), filed January 28, 2011, to accept the unintentionally delayed payment of a maintenance fee for the above-identified patent.

This patent expired on November 16, 2008 for failure to pay the first maintenance fee. On November 9, 2010, the initial petition was filed, accompanied by the maintenance fee. Since this petition was submitted within twenty-four months after the six-month grace period provided in 37 CFR 1.362(e), the petition was timely filed under the provisions of 37 CFR 1.378(c).

The balance due of $20.00 towards the $1,640.00 surcharge will be charged to counsel's deposit account as authorized in the subject petition.

The petition is **GRANTED**.

The maintenance fee is hereby accepted and the above-identified patent is reinstated as of the mail date of this decision.

Telephone inquiries related to this decision should be directed to the undersigned at (571) 272-3231.

D Wood

Douglas I. Wood
Senior Petitions Attorney
Office of Petitions

UNITED STATES PATENT AND TRADEMARK OFFICE

Commissioner for Patents
United States Patent and Trademark Office
P.O. Box 1450
Alexandria, VA 22313-1450
www.uspto.gov

MAILED

SEP 27 2010

OFFICE OF PETITIONS

**GARY L. SHAFFER**
**901 BANKS PLACE**
**ALEXANDRIA VA 22312**

In re Patent No. 6,860,680 :
Issue Date: March 01, 2005 :
Application No. 10/440,088 : DECISION ON PETITION
Filed: May 19, 2003 :
Attorney Docket No. **AGS-29641-175073-A** :

This is a decision on the petition under 37 CFR 1.378(c), filed May 06, 2010, to accept the delayed payment of a maintenance fee for the above-identified patent.

The petition is **DISMISSED**.

If reconsideration of this decision is desired, a petition for reconsideration under 37 CFR 1.378(e) must be filed within TWO (2) MONTHS from the mail date of this decision. No extension of this two-month time limit can be granted under 37 CFR 1.136(a) or (b). This is **not** a final agency action within the meaning of 5 U.S.C. § 704.

Any petition for reconsideration of this decision must be accompanied by the petition fee of $400 as set forth in 37 CFR 1.17(f). The petition for reconsideration must include the lacking item(s) noted below, since, after a decision on the petition for reconsideration, no further reconsideration or review of the matter will be undertaken by the Director.

This patent expired at midnight on March 01, 2009 for failure to pay the three and one-half maintenance fee. Since this petition was submitted within twenty-four months after the six-month grace period provided in 37 CFR 1.362(e), the petition was timely filed under the provisions of 37 CFR 1.378(c).

A petition to accept the unintentionally delayed payment of a maintenance fee under 35 U.S.C. 41(c) and 37 CFR 1.378(c) must be accompanied by: (1) a statement that the delay was unintentional; (2) payment of the appropriate maintenance fee, unless previously submitted; (3) payment of the surcharge set forth in 37 CFR 1.20(i)(2). This petition lacks item (1) above. There is no statement about the delay being unintentional. It appears that an incorrect form was submitted. As the submitted form included both the Maintenance fee due and the surcharge for its unintentionally delayed payment, the instant submission has been regarded as a petition for acceptance of unintentionally delayed payment of Maintenance fee. In submitting a renewed petition, petitioner is strongly urged to use the attached form PTO/SB/66. Petitioner is also reminded to include therewith a fee of $400, as noted above.

Petition should note that the instant petition was not signed by all of the inventors and, the record herein fails to disclose that the one signing the instant petition has been given a power of attorney by the other applicant. See 37 CFR 1.33(b) which states:

(b) Amendments and other papers. Amendments and other papers, except for written assertions pursuant to § 1.27(c)(2)(ii) of this part, filed in the application must be signed by:

(1) A registered patent attorney or patent agent of record appointed in compliance with § 1.32(b);

(2) A registered patent attorney or patent agent not of record who acts in a representative capacity under the provisions of § 1.34;

(3) An assignee as provided for under §3.71(b) of this chapter; or

(4) All of the applicants (§ 1.41(b)) for patent, unless there is an assignee of the entire interest and such assignee has taken action in the application in accordance with § 3.71 of this chapter.

Further correspondence with respect to this matter should be addressed as follows:

By Mail: Mail Stop PETITION
Commissioner for Patents
Post Office Box 1450
Alexandria, VA 22313-1450

By hand: U. S. Patent and Trademark Office
Customer Service Window, Mail Stop Petitions
Randolph Building
401 Dulany Street
Alexandria, VA 22314

The centralized facsimile number is (571) 273-8300.

Telephone inquiries should be directed to Tredelle Jackson at 571-272-2783.

Ramesh Krishnamurthy

Ramesh Krishnamurthy
Petitions Examiner
Office of Petitions

Encl: PTO/SB/66

UNITED STATES PATENT AND TRADEMARK OFFICE

Commissioner for Patents
United States Patent and Trademark Office
P.O. Box 1450
Alexandria, VA 22313-1450
www.uspto.gov

| | | |
|---|---|---|
| In re Application of:<br>RICHARD G. HYATT JR.<br>Application No. 10/440,308<br>Filed: 05/19/2003<br>For: ELECTROMECHANICAL CYLINDER PLUG | :<br>:<br>:<br>:<br>: | NOTICE OF WITHDRAWAL FROM ISSUE UNDER 37 CFR § 1.313(b) |

The above-identified application is withdrawn from issue pursuant 37 CFR § 1.313 (b) to permit reopening of prosecution. The reasons therefore will be communicated to you by the examiner.

The above-identified application is hereby withdrawn from issue.

The issue fee and publication fee are refundable upon written request. Applicant may also request that the fee be credited to a specified Deposit Account. Applicant may, however, wait until such time as the application is either allowed or abandoned to make such request. If the application is subsequently allowed, upon receipt of a new Notice of Allowance and Issue and Publication Fee Due, applicant may further request that the previously submitted issue fee and publication fee be applied toward payment of the issue fee and publication fee in the amount identified in the new Notice of Allowance and Issue and Publication Fee Due. This request, and any balance due, must be received on or before the due date noted in the new Notice of Allowance and Issue and Publication Fee Due in order to prevent abandonment of the application. If the application is abandoned, applicant may request either a refund or a credit to a specified Deposit Account.

Telephone inquires should be directed to Supervisory Patent Examiner Peter Cuomo at (571)-272-6856.

The above-identified application is being forwarded to the examiner for prompt appropriate action, including notifying applicant of the new status of this application.

David L. Talbott, Director
Technology Center 3600

ROBERT E. BUSHNELL & LAW FIRM
2029 K STREET NW
SUITE 600
WASHINGTON DC 20006-1004

## SPE RESPONSE FOR CERTIFICATE OF CORRECTION

DATE : 1/6/2012

TO SPE OF : ART UNIT 2464 Ngo Ricky (Spe)

SUBJECT : Request for Certificate of Correction for Appl. No.: 10/440325 Patent No.: 8040915

CofC mailroom date: _____

Please respond to this request for a certificate of correction within 7 days.

**FOR IFW FILES:**

Please review the requested changes/corrections as shown in the **COCIN** document(s) in the IFW application image. No new matter should be introduced, nor should the scope or meaning of the claims be changed.

Please complete the response (see below) and forward the completed response to scanning using document code **COCX**.

**FOR PAPER FILES:**

Please review the requested changes/corrections as shown in the attached certificate of correction. Please complete this form (see below) and forward it with the file to:

**Certificates of Correction Branch (CofC)**
**Randolph Square – 9D10-A**
**Palm Location 7580**

Note: _____

Certificates of Correction Branch

571-272-8680 _____

**Thank You For Your Assistance**

**The request for issuing the above-identified correction(s) is hereby:**
Note your decision on the appropriate box.

- ☒ **Approved** — **All** changes apply.
- ☐ **Approved in Part** — Specify below which changes **do not** apply.
- ☐ **Denied** — State the reasons for denial below.

**Comments:** _____

Ricky Ngo

SPE

2464

Art Unit

IN THE UNITED STATES PATENT AND TRADEMARK OFFICE

In re patent of:
Scott A. CUMMINGS
Patent No.: 8,040,915 B2
Issued: October 18, 2011
For: **System, Method and Computer Program Product for Facilitating Communication Between Devices Implementing Proprietary Features in a DOCSIS-Compliant Broadband Communication System**

Confirmation No.: 2788
Art Unit: 2616
Examiner: Phuongchau Ba Nguyen
Atty. Docket No.: 1875.4000000

OK TO ENTER: /P.N./
04/09/2012

# Request for Certificate of Correction Under 37 C.F.R. § 1.323 For Applicant's Mistake

***Attn: Certificate of Correction Branch***

Commissioner for Patents
PO Box 1450
Alexandria, VA 22313-1450

Sir:

It is hereby requested that a Certificate of Correction under 37 C.F.R. § 1.323 be issued for the above-captioned United States Patent. This Certificate of Correction is being requested due to mistakes which appear in the printed patent. The mistakes made by Applicants are of a clerical or typographical nature, or of a minor character. Patentee submit that correction of these errors does not introduce new matter.

Specifically, the printed patent contains the following errors for which a Certificate of Correction is respectfully requested:

| | **Location and Description of Error in Patent** (Complete Sentence) | **PTO or Applicant Error?** |
|---|---|---|
| **1.** | Column 14, line 24, please replace "message-having" with --message having--. | Applicant |

| | Location and Description of Error in Patent (Complete Sentence) | PTO or Applicant Error? |
|---|---|---|
| 2. | Column 15, line 4, please replace "feature the at least one propriety feature not being" with --feature, the at least one propriety feature not being--. | Applicant |
| 3. | Column 16, line 31, please replace "comprises" with –comprise--. | Applicant |
| 4. | Column 16, line 37, please replace "comprises" with –comprise--. | Applicant |
| 5. | Column 16, line 43, please replace "comprises" with –comprise--. | Applicant |
| 6. | Column 16, line 50, please replace "comprises:" with --comprise:--. | Applicant |
| 7. | Column 16, line 60, please replace "comprises" with –comprise--. | Applicant |
| 8. | Column 17, line 3, please replace "comprises:" with --comprise:--. | Applicant |
| 9. | Column 18, line 6, please replace "comprises" with –comprise--. | Applicant |

## *Remarks*

The above-noted corrections do not involve such changes in the patent as would constitute new matter or would require reexamination.

A completed Form PTO/SB/44 accompanies this request, with the above-noted corrections printed thereon. Accordingly, a Certificate of Correction is believed proper and issuance thereof is respectfully requested.

This request is accompanied by payment of the fee set forth in 37 C.F.R. § 1.20(a). Fee payment is provided through online credit card payment. The Commissioner is hereby authorized to charge any fee deficiency, or credit any overpayment, to our Deposit Account No. 19-0036.

Respectfully submitted,

STERNE, KESSLER, GOLDSTEIN & FOX P.L.L.C.

Robert Sokohl
Attorney for Patentee
Registration No. 36,013

Date: December 30, 2011

1100 New York Avenue, N.W.
Washington, D.C. 20005-3934
(202) 371-2600

1437059_1.DOCX

PTO/SB/44 (09-07)
Approved for use through 08/31/2010. OMB 0651-0033
U.S. Patent and Trademark Office; U.S. DEPARTMENT OF COMMERCE
Under the Paperwork Reduction Act of 1995, no persons are required to respond to a collection of information unless it displays a valid OMB control number.
(Also Form PTO-1050)

# UNITED STATES PATENT AND TRADEMARK OFFICE
## CERTIFICATE OF CORRECTION



PATENT NO. : 8,040,915 B2

APPLICATION NO.: 10/440,325

ISSUE DATE : October 18, 2011

INVENTOR(S) : Scott A. CUMMINGS

It is certified that an error appears or errors appear in the above-identified patent and that said Letters Patent is hereby corrected as shown below:

Column 14, line 24, please replace "message-having" with --message having--;

Column 15, line 4, please replace "feature the at least one propriety feature not being" with --feature, the at least one propriety feature not being--;

Column 16, line 31, please replace "comprises" with --comprise--;

Column 16, line 37, please replace "comprises" with --comprise--;

Column 16, line 43, please replace "comprises" with --comprise--;

Column 16, line 50, please replace "comprises:" with --comprise:--;

Column 16, line 60, please replace "comprises" with --comprise--;

Column 17, line 3, please replace "comprises:" with --comprise:--; and

Column 18, line 6, please replace "comprises" with --comprise--.

MAILING ADDRESS OF SENDER (Please do not use customer number below):

Sterne, Kessler, Goldstein & Fox P.L.L.C.
1100 New York Avenue, N.W.
Washington, DC 20005-3934

Atty. Dkt. No. 1875.4000000

This collection of information is required by 37 CFR 1.322, 1.323, and 1.324. The information is required to obtain or retain a benefit by the public which is to file (and by the USPTO to process) an application. Confidentiality is governed by 35 U.S.C. 122 and 37 CFR 1.14. This collection is estimated to take 1.0 hour to complete, including gathering, preparing, and submitting the completed application form to the USPTO. Time will vary depending upon the individual case. Any comments on the amount of time you require to complete this form and/or suggestions for reducing this burden, should be sent to the Chief Information Officer, U.S. Patent and Trademark Office, U.S. Department of Commerce, P.O. Box 1450, Alexandria, VA 22313-1450. DO NOT SEND FEES OR COMPLETED FORMS TO THIS ADDRESS. **SEND TO: Attention Certificate of Corrections Branch, Commissioner for Patents, P.O. Box 1450, Alexandria, VA 22313-1450.**

*If you need assistance in completing the form, call 1-800-PTO-9199 and select option 2.*

UNITED STATES PATENT AND TRADEMARK OFFICE

Commissioner for Patents
United States Patent and Trademark Office
P.O. Box 1450
Alexandria, VA 22313-1450
www.uspto.gov

Bingham McCutchen LLP
2020 K Street, NW
Washington,DC 20006

MAILED
JAN 18 2011
OFFICE OF PETITIONS

In re Application of :
Stein, et al. :
Application No. 10/440,330 : ON PETITION
Filed: May 16, 2003 :
Attorney Docket No. ANA-041 :

This is a decision on the petition under 37 CFR 1.78(a)(3), filed August 24, 2010, to accept an unintentionally delayed claim under 35 U.S.C. § 120 for the benefit of priority to the prior-filed non-provisional application set forth in the amendment filed concurrently with the instant petition. The petition will also be treated as a petition under 37 CFR 1.78(a)(6) to accept the unintentionally delayed claim under 35 U.S.C. § 119(e) for the benefit of priority of the prior-filed provisional application set forth in the amendment filed concurrently with the instant petition.

The petition under 37 CFR 1.78(a)(3) is **DISMISSED**.

The petition under 37 CFR 1.78(a)(6) is also **DISMISSED**.

A petition for acceptance of a claim for late priority under 37 CFR 1.78(a)(3) and 37 CFR 1.78(a)(6) is only applicable to those applications filed on, or after, November 29, 2000. Further, the petition is appropriate only after the expiration of the periods specified in 37 CFR 1.78(a)(5)(ii) and 37 CFR 1.78(a)(2)(ii).

The petition under 37 CFR 1.78(a)(3) must be accompanied by:

(1) the reference required by 35 U.S.C. § 120 and 37 CFR 1.78(a)(2)(i) of the prior-filed application, unless previously submitted;
(2) the surcharge set forth in § 1.17(t); and
(3) a statement that the entire delay between the date the claim was due under 37 CFR 1.78(a)(2)(ii) and the date the claim was filed was unintentional. The Director may require additional information where there is a question whether the delay was unintentional.

The petition under 37 CFR 1.78(a)(6) must be accompanied by:

(1) the reference required by 35 U.S.C. § 119(e) and 37 CFR 1.78(a)(5)(i) of the prior filed application, unless previously submitted.

(2) the surcharge set forth in § 1.17(t)

(3) a statement that the entire delay between the date the claim was due under 37 CFR 1.78(a)(5)(ii) and the date the claim was filed was unintentional. The Commissioner may require additional information where there is a question whether the delay was unintentional.

The petition does not comply with item (1).

37 CFR 1.78(a)(2)(i) requires that any nonprovisional application claiming the benefit of one or more prior-filed copending nonprovisional applications must contain or be amended to contain references to each such prior-filed application, identifying it by application number (consisting of the series code and serial number) and indicating the relationship of the applications. The relationship between the applications is whether the subject application is a continuation, divisional, or continuation-in-part of a prior-filed nonprovisional application. An example of a proper benefit claim is: "This application is a continuation of Application No. 10/---, filed---." A benefit claim that merely states: "This application claims the benefit of Application No. 10/---, filed---," does not comply with 37 CFR 1.72(a)(2)(i) since the proper relationship, which includes the type of continuing application, is not stated. Also, the status of each nonprovisional parent application (if it is patented or abandoned) should also be indicated, following the filing date of the parent nonprovisional application. *See* MPEP Section 201.11, Reference to Prior Nonprovisional Applications. The amendment fails to comply with the provisions of 37 CFR 1.78(a)(2)(i) and is therefore unacceptable.

It is again noted that the issue fee in this case was paid on March 12, 2010. It is conceivable that the application will issue before either the filing or the granting of a renewed petition under 37 C.F.R. §1.78(a)(6). In such case, submission of a certificate of correction and fee of $100.00 will be required as a condition for granting the petition under 37 CFR 1.78(a)(3) and 37 CFR 1.78(a)(6).

Petitioner must submit the renewed petition under 37 CFR 1.78(a)(3) and 37 CFR 1.78(a)(6), accompanied by a completed Certificate of Correction (with the $100.00 fee), which includes the benefit claim to the prior-filed provisional applications.

Further correspondence with respect to this matter should be addressed as follows:

By mail: Mail Stop PETITIONS
Commissioner for Patents
Post Office Box 1450
Alexandria, VA 22313-1450

By hand: Customer Service Window
Mail Stop Petitions
Randolph Building
401 Dulany Street
Alexandria, VA 22314

By fax: (571) 273-8300
ATTN: Office of Petitions

Any questions concerning this matter may be directed to Kenya A. McLaughlin, Petitions Attorney, at (571) 272-3222.

Chris Bottorff
Supervisor
Office of Petitions

## SPE RESPONSE FOR CERTIFICATE OF CORRECTION

DATE : **08/26/11**

TO SPE OF : ART UNIT: **2193 Attn: BULLOCK JR LEWIS A (SPE)**

SUBJECT : Request for Certificate of Correction for Appl. No.: **10/440330** Patent No.: **7895253**

CofC mailroom date: **08/17/11**

Please respond to this request for a certificate of correction within 7 days.

**FOR IFW FILES:**

Please review the requested changes/corrections as shown in the **COCIN** document(s) in the IFW application image. No new matter should be introduced, nor should the scope or meaning of the claims be changed.

Please complete the response (see below) and forward the completed response to scanning using document code **COCX**.

**FOR PAPER FILES:**

Please review the requested changes/corrections as shown in the attached certificate of correction. Please complete this form (see below) and forward it with the file to:

**Certificates of Correction Branch (CofC)**
**Randolph Square – 9D10-A**
**Palm Location 7580**

Note: **Please check the Specifications for Related Applications, should this text be changed**

**Tasneem Siddiqui**
**Certificates of Correction Branch**
**703-756-1814 & 703-756-1593**

**Thank You For Your Assistance**

**The request for issuing the above-identified correction(s) is hereby:**
Note your decision on the appropriate box.

- [x] **Approved** — All changes apply.
- [ ] **Approved in Part** — Specify below which changes **do not** apply.
- [ ] **Denied** — State the reasons for denial below.

**Comments:** _____

LEWIS A. BULLOCK, JR.
SUPERVISORY PATENT EXAMINER

**SPE** — 2193 **Art Unit**

UNITED STATES PATENT AND TRADEMARK OFFICE

Commissioner for Patents
United States Patent and Trademark Office
P.O. Box 1450
Alexandria, VA 22313-1450
www.uspto.gov

**GAUTHIER & CONNORS, LLP**
**225 FRANKLIN STREET**
**SUITE 2300**
**BOSTON MA 02110**

MAILED

SEP 10 2010

OFFICE OF PETITIONS

| | | |
|---|---|---|
| In re Application of | : | |
| Shun-Min Chen | : | |
| Application No. 10/440,786 | : | DECISION ON PETITION |
| Filed: May 19, 2003 | : | |
| Attorney Docket No. 7176 | : | |

This is a decision on the petition under the unintentional provisions of 37 CFR 1.137(b), filed August 16, 2010, to revive the above-identified application.

The petition is **GRANTED**.

The above-identified application became abandoned for failure to reply in a timely manner to the Notice to File Corrected Application Papers (Notice) mailed July 7, 2003, which set a shortened statutory period for reply of two (2) months. No extensions of time under the provisions of 37 CFR 1.136(a) were obtained. Accordingly, the above-identified application became abandoned on September 8, 2003. A Notice of Abandonment was mailed on September 8, 2004.

The petition satisfies the requirements of 37 CFR 1.137(b) in that petitioner has supplied (1) Replacement drawings, (2) the petition fee of $810.00, and (3) a proper statement of unintentional delay.

Further, it is not apparent whether the statement of unintentional delay was signed by a person who would have been in a position of knowing that the **entire** delay in filing the required reply from the due date for the reply until the filing of a grantable petition pursuant to 37 CFR 1.137(b) was unintentional. Nevertheless, in accordance with 37 CFR 10.18, the statement is accepted as constituting a certification of unintentional delay. However, in the event that petitioner has no knowledge that the delay was unintentional, petitioner must make such an inquiry to ascertain that, in fact, the delay was unintentional. If petitioner discovers that the delay was intentional, petitioner must notify the Office.

Telephone inquiries concerning this decision should be directed to the undersigned at (571) 272-7751.

This application is being referred to the Office of Patent Application Processing for further processing in accordance with this decision on petition.

/Joan Olszewski/
Joan Olszewski
Petitions Examiner
Office of Petitions

UNITED STATES PATENT AND TRADEMARK OFFICE

Commissioner for Patents
United States Patent and Trademark Office
P.O. Box 1450
Alexandria, VA 22313-1450
www.uspto.gov

**GAUTHIER & CONNORS, LLP**
**225 FRANKLIN STREET**
**SUITE 2300**
**BOSTON MA 02110**

**MAILED**

SEP 10 2010

**OFFICE OF PETITIONS**

| | | |
|---|---|---|
| In re Application of | : | |
| Shun-Min Chen | : | |
| Application No. 10/440,786 | : | DECISION ON PETITION |
| Filed: May 19, 2003 | : | |
| Attorney Docket No. 7176 | : | |

This is a decision on the petition under the unintentional provisions of 37 CFR 1.137(b), filed August 16, 2010, to revive the above-identified application.

The petition is **GRANTED**.

The above-identified application became abandoned for failure to file in a timely manner to the Notice to File Corrected Application Papers (Notice) mailed July 7, 2003, which set a shortened statutory period for reply of two (2) months. No extensions of time under the provisions of 37 CFR 1.136(a) were obtained. Accordingly, the above-identified application became abandoned on September 8, 2003. A Notice of Abandonment was mailed on September 8, 2004.

The petition satisfies the requirements of 37 CFR 1.137(b) in that petitioner has supplied (1) Replacement drawings, (2) the petition fee of $810.00, and (3) a proper statement of unintentional delay.

Further, it is not apparent whether the statement of unintentional delay was signed by a person who would have been in a position of knowing that the **entire** delay in filing the required reply from the due date for the reply until the filing of a grantable petition pursuant to 37 CFR 1.137(b) was unintentional. Nevertheless, in accordance with 37 CFR 10.18, the statement is accepted as constituting a certification of unintentional delay. However, in the event that petitioner has no knowledge that the delay was unintentional, petitioner must make such an inquiry to ascertain that, in fact, the delay was unintentional. If petitioner discovers that the delay was intentional, petitioner must notify the Office.

Telephone inquiries concerning this decision should be directed to the undersigned at (571) 272-7751.

This application is being referred to the Office of Patent Application Processing for further processing in accordance with this decision on petition.

Joan Olszewski

Joan Olszewski
Petitions Examiner
Office of Petitions

UNITED STATES PATENT AND TRADEMARK OFFICE

Commissioner for Patents
United States Patent and Trademark Office
P.O. Box 1450
Alexandria, VA 22313-1450
www.uspto.gov

MAILED
JUL 26 2011
OFFICE OF PETITIONS

**CHARLES D. GUNTER, JR.**
**WHITAKER, CHALK, SWINDLE & SAWYER, LLP**
**SUITE 3500**
**301 COMMERCE STREET**
**FORT WORTH TX 76102-4186**

| | | |
|---|---|---|
| In re Patent No. 7,037,557 | : | |
| Issue Date: May 02, 2006 | : | |
| Application No. 10/440,872 | : | DECISION ON PETITION |
| Filed: May 19, 2003 | : | |
| Attorney Docket No. **20682.004** | : | |

This is a decision on the petition under 37 CFR 1.378(c), received on April 04, 2011, with a certificate of mailing dated March 30, 2011, to accept the unintentionally delayed payment of a maintenance fee for the above-identified patent.

The petition is **GRANTED**.

This patent expired at midnight on May 02, 2010 for failure to pay the three and one half year maintenance fee. Since this petition was submitted within twenty-four months after the six-month grace period provided in 37 CFR 1.362(e), the petition was timely filed under the provisions of 37 CFR 1.378(c).

The maintenance fee is hereby accepted and the above-identified patent is reinstated as of the mail date of this decision.

The file does not indicate a change of address has been submitted, although the address given on the petition differs from the address of record. If appropriate, a change of fee address (form PTO/SB/47) and a request for customer number (form PTO/SB/125) should be filed in accordance with Manual of Patent Examining Procedure, section 2540. A courtesy copy of this decision is being mailed to the address on the petition. However, the Office will mail all future correspondence solely to the address of record.

Telephone inquiries concerning this decision should be directed to Tredelle Jackson at (571) 272-2783.

Ramesh Krishnamurthy
Petitions Examiner
Office of Petitions

cc: **THOMAS JOSEPH KEYES, SR.**
**CHIEF EXECUTIVE OFFICER, THERMACOR PROCESS, LP**
**1670 HICKS FIELD ROAD E.**
**FORT WORTH TX 76179**

UNITED STATES PATENT AND TRADEMARK OFFICE

Commissioner for Patents
United States Patent and Trademark Office
P.O. Box 1450
Alexandria, VA 22313-1450
www.uspto.gov

**Christopher M. Goff (27860)**
**ARMSTRONG TEASDALE LLP**
**7700 Forsyth Boulevard**
**Suite 1800**
**St. Louis MO 63105**

**MAILED**

SEP 07 2010

**OFFICE OF PETITIONS**

| | | |
|---|---|---|
| In re Application of | : | |
| Lucas Saxe et al. | : | |
| Application No. 10/440,988 | : | DECISION ON PETITION |
| Filed: May 19, 2003 | : | |
| Attorney Docket No. 27883-35 | : | |

This is a decision on the petition under the unintentional provisions of 37 CFR 1.137(b), filed July 13, 2010, to revive the above-identified application.

The petition is **GRANTED**.

This application became abandoned as a result of petitioner's failure to take appropriate action in a timely manner after the decision of April 8, 2010 by the Board of Patent Appeals and Interferences. Therefore, the proceedings as to the rejected claims were terminated. *See* 37 CFR 1.197(b). As no claim was allowed, the application became abandoned on June 9, 2010. A Notice of Abandonment was mailed on June 16, 2010. *See* MPEP 1214.06.

The petition satisfies the requirements of 37 CFR 1.137(b) in that petitioner has supplied (1) the reply in the form of an amendment, (2) the petition fee of $1,620, and (3) a proper statement of unintentional delay. Accordingly, the amendment is accepted as being unintentionally delayed.

It is not apparent whether the person signing the statement of unintentional delay was in a position to have firsthand or direct knowledge of the facts and circumstances of the delay at issue. Nevertheless, such statement is being treated as having been made as the result of a reasonable inquiry into the facts and circumstances of such delay. See 37 CFR 10.18(b) and Changes to Patent Practice and Procedure; Final Rule Notice, 62 Fed. Reg. 53131, 53178 (October 10, 1997), 1203 Off. Gaz. Pat. Office 63, 103 (October 21, 1997). In the event that such an inquiry has not been made, petitioner must make such an inquiry. If such inquiry results in the discovery that it is not correct that the entire delay in filing the required reply from the due date for the reply until the filing of a grantable petition pursuant to 37 CFR 1.137(b) was unintentional, petitioner must notify the Office.

The application file does not indicate a change of address has been filed in this case, although the address given on the petition differs from the address of record. A change of address should be filed in this case in accordance with MPEP 601.03. A courtesy copy of this decision is being mailed to the address noted on the petition. However, until otherwise instructed, all future correspondence regarding this application will be mailed solely to the address of record.

Telephone inquiries concerning this decision should be directed to Kimberly Inabinet at (571) 272-4618.

This application is being referred to Technology Center AU 3644 for appropriate action by the Examiner in the normal course of business on the reply received July 13, 2010.

/Kimberly Inabinet/

Kimberly Inabinet
Petitions Examiner
Office of Petitions

UNITED STATES PATENT AND TRADEMARK OFFICE

Commissioner for Patents
United States Patent and Trademark Office
P.O. Box 1450
Alexandria, VA 22313-1450
www.uspto.gov

HUNTON & WILLIAMS LLP
INTELLECTUAL PROPERTY
DEPARTMENT
1900 K STREET, N.W.
SUITE 1200
WASHINGTON DC 20006-1109

**MAILED**

JAN 11 2011

**OFFICE OF PETITIONS**

| | | |
|---|---|---|
| In re Application of | : | |
| Siber | : | |
| Application No. 10/441,059 | : | ON APPLICATION FOR |
| Filed: May 20, 2003 | : | PATENT TERM ADJUSTMENT |
| Atty Docket No. 38523.000031 | : | |

This is in response to the REQUEST FOR RECONSIDERATION OF PATENT TERM ADJUSTMENT UNDER 37 C.F.R. § 1.705(b), filed October 28, 2010. Applicant submits that the correct patent term adjustment to be indicated on the patent is eight hundred fifty-nine (859) days, not seven hundred eight (708) days as calculated by the Office as of the mailing of the initial determination of patent term adjustment. Applicant requests this correction solely on the basis that the Office will take in excess of three years to issue this patent.

As the instant application for patent term adjustment requests reconsideration of the patent term adjustment as it relates to the Office's failure to issue the patent within 3 years of the filing date, the application for patent term adjustment under 37 CFR 1.705(b) is **DISMISSED as PREMATURE**.

Knowledge of the actual date the patent issues is required to calculate the amount, if any, of additional patent term patentee is entitled to for Office failure to issue the patent within 3 years. See § 1.702(b). This is true even in this instance where a request for continued examination (RCE) was filed. The computer will not undertake the § 1.702(b) calculation until the actual date of issuance of the patent has been determined. Likewise, the computer will not calculate any further Office delay under § 1.702(a)(4) or applicant delay under § 1.704(c)(10) until the actual date of issuance of the patent has been determined. As such, the Office can not make a

determination on the correctness of the patent term adjustment until the patent has issued.

Requesting reconsideration of the patent term adjustment to be indicated on the patent under 37 CFR 1.705(b) based on the initial determination of patent term adjustment and a projected issuance date of the patent or even the filing date of the request for continued examination is premature. Accordingly, it is appropriate to dismiss as premature such a request.

Rather than file an application for patent term adjustment under 37 CFR 1.705(b) contesting the 37 CFR 1.702(b) calculation at the time of the mailing of the notice of allowance, applicant is advised that he may wait until the time of the issuance of the patent and file a request for reconsideration of the patent term adjustment pursuant to 37 CFR 1.705(d). As the USPTO does not calculate the amount of time earned pursuant to 37 CFR 1.702(b) until the time of the issuance of the patent, the Office will consider any request for reconsideration of the patent term adjustment due to an error in the calculation of 37 CFR 1.702(b) to be timely if the request for reconsideration is filed within two months of the issuance of the patent. However, as to all other bases for contesting the initial determination of patent term adjustment received with the notice of allowance, applicant must timely file an application for patent term adjustment prior to the payment of the issue fee[1].

The Office acknowledges submission of the $200.00 fee set forth in 37 CFR 1.18(e) for consideration of the application for patent term adjustment under 37 CFR 1.705(b).

Any request for reconsideration of the patent term adjustment indicated on the patent must be timely filed within 2 months after issuance pursuant to 37 CFR 1.705(d) and must include payment of the required fee under 37 CFR 1.18(e).

---

[1] For example, if applicant disputes both the calculation of patent term adjustment under 37 CFR 1.702(a)(1) for Office failure to mail a first Office action or notice of allowance not later than fourteen months after the date on which the application was filed and under 37 CFR 1.702(b) for Office failure to issue a patent within three years of the actual filing date of the application, then applicant must still timely file an application for patent term adjustment prior to the payment of the issue fee to contest the calculation of Office delay in issuing a first Office action or notice of allowance. See 37 CFR 1.705(b) and 35 U.S.C. 154(b)(3)(B). A dispute as to the calculation of the §1.702(a)(1) period raised on request for reconsideration of patent term adjustment under 37 CFR 1.705(d) will be dismissed as untimely filed.

The Office of Data Management has been advised of this decision. This application is being referred to the Office of Data Management for issuance of the patent.

Telephone inquiries specific to this decision should be directed to the undersigned at (571) 272-3230.

Shirene Willis Brantley

Shirene Willis Brantley
Senior Petitions Attorney
Office of Petitions

UNITED STATES PATENT AND TRADEMARK OFFICE

COMMISSIONER FOR PATENTS
UNITED STATES PATENT AND TRADEMARK OFFICE
P.O. BOX 1450
ALEXANDRIA, VA 22313-1450
WWW.USPTO.GOV

Paper No.

MAILED

MAR 29 2011

OFFICE OF PETITIONS

F. CHAU & ASSOCIATES, LLC
130 WOODBURY ROAD
WOODBURY NY 11797

| | | |
|---|---|---|
| In re Application of | : | |
| Yacenda | : | |
| Application No. 10/441,587 | : | DECISION ON PETITION |
| Filed: May 19, 2003 | : | PURSUANT TO |
| Attorney Docket No.: 8438-70 | : | 37 C.F.R. § 1.181(A) |
| CIP II | : | |
| Title: INTERACTIVE COMPUTER | : | |
| GAMING SYSTEM WITH AUDIO | : | |
| RESPONSE | : | |

This is a decision on the petition pursuant to 37 C.F.R. § 1.181(a), filed on January 26, 2011, requesting that the holding of abandonment in the above-identified application be withdrawn.

This petition pursuant to 37 C.F.R. § 1.181(a) is **GRANTED.**

## BACKGROUND

The above-identified application became abandoned for failure to reply within the meaning of 37 C.F.R § 1.113 in a timely manner to the final Office action mailed October 24, 2006, which set a shortened statutory period for reply of three months. No extensions of time under the provisions of 37 C.F.R § 1.136(a) were obtained, and no response was received. Accordingly, the above-identified application became abandoned on January 25, 2007. A notice of abandonment was mailed on May 16, 2007.

## ANALYSIS

Petitioner has alleged that the mailing was not received, as it was not properly mailed. The electronic file has been reviewed, and it is clear that a change of address was filed on July 5, 2006 (prevenient to the mailing of the final Office action of

October 24, 2006) and was not effectuated by the Office until June 26, 2007 (subsequent to the mailing of the notice of abandonment). The electronic record further indicates that both the final Office action and the notice of abandonment mailings were returned to the Office, and the former has been marked as "NOT DELIVERABLE AS ADDRESSED, UNABLE TO FORWARD" (emphasis included) by the USPS.

Considering the facts and circumstances of the delay at issue, as set forth on petition, it is concluded that Petitioner has met his burden of establishing that the final Office action of October 24, 2006 was not received.

Accordingly, the petition pursuant to 37 C.F.R. § 1.181(a) is **GRANTED**. The holding of abandonment is **WITHDRAWN**.

CONCLUSION

The Technology Center will be notified of this decision. The Technology Center's support staff will re-mail the final Office action of October 24, 2006, and will set a new period for response.

Petitioner may find it beneficial to view Private PAIR within a fortnight of the present decision to ensure that the withdrawal of the holding of abandonment has been acknowledged by the Technology Center in response to this decision. It is noted that all inquiries with regard to any failure of that change in status should be directed to the Technology Center where that change of status must be effected - **the Office of Petitions cannot effectuate a change of status.**

Telephone inquiries regarding *this decision* should be directed to the undersigned at (571) 272-3225.[1] All other inquiries concerning examination procedures or status of the application should be directed to the Technology Center.

/Paul Shanoski/
Paul Shanoski
Senior Attorney
Office of Petitions

---

1 Petitioner will note that all practice before the Office should be in writing, and the action of the Office will be based exclusively on the written record in the Office. See 37 C.F.R. § 1.2. As such, Petitioner is reminded that no telephone discussion may be controlling or considered authority for Petitioner's further action(s).

UNITED STATES PATENT AND TRADEMARK OFFICE

Commissioner for Patents
United States Patent and Trademark Office
P.O. Box 1450
Alexandria, VA 22313-1450
www.uspto.gov

Keeling Patents and Trademarks, LLC
3310 Katy Freeway, 2nd Floor
Houston TX 77007

MAILED

DEC 22 2010

PCT LEGAL ADMINISTRATION

| | |
|---|---|
| In re Patent no.: 7,128,170 | : |
| Issue Date: October 31, 2006 | : |
| Application No. 10/441,672 | : DECISION ON PETITION |
| Filed: May 20, 2003 | : UNDER 37 CFR 1.78(a)(3) |
| Attorney Docket No. 1164.002 | : |

This decision is issued in response to applicant's "Petition under 37 CFR 1.78(a)(3) to Accept an Unintentionally Delayed Domestic Priority Claim," filed May 26, 2010, seeking to correct a claim for priority by way of a Certificate of Correction to prior-filed International Patent Application PCT/GB2001/0055057, filed November 15, 2001. Additionally, this decision is in response to applicant's "Petition under 37 CFR 1.55(c) to Accept an Unintentionally Delayed Foreign Priority Claim" filed May 26, 2010.

*Petition under 37 CFR 1.78(a)(3)*

The above-captioned U.S. patent issued from an application filed after November 29, 2000, and the claim herein for the benefit of priority to the prior-filed international application is submitted after the expiration of the time period specified in 37 CFR 1.78(a)(2)(ii). Accordingly, the present application is properly considered under 37 CFR 1.78(a)(3). See MPEP section 1481.03.

A petition for acceptance of a claim for late priority under 37 CFR 1.78(a)(3) is only applicable to those applications filed on or after November 29, 2000. Further, the petition is appropriate only after the expiration of the period specified in 37 CFR 1.78(a)(2)(ii). In addition, the petition under 37 CFR 1.78(a)(3) must be accompanied by:

(1) the reference required by 35 U.S.C. § 120 and 37 CFR 1.78(a)(2)(i) of the prior-filed application(s), unless previously submitted;
(2) the surcharge set forth in § 1.17(t); and
(3) a statement that the entire delay between the date the claim was due under 37 CFR 1.78(a)(2)(ii) and the date the claim was filed was unintentional. The Commissioner may require additional information where there is a question whether the delay was unintentional.

Application No. 10/441,672

The present petition fails to comply with item (1) above.

Applicant has submitted a Request for Certificate of Correction for the patent no. 7,128,170. However, applicant has not submitted an amended specification or an Application Data Sheet for nonprovisional application no. 10/441,672. The application, rather than the patent, must contain or be amended to contain a reference to the prior filed application as required by law. (See 35 U.S.C. 120.)

The petition under 37 CFR 1.78(a)(3) is DISMISSED without prejudice.

*Petition under 37 CFR 1.55(c)*

Pursuant to 37 CFR 1.55(a)(2), the claim for priority and the certified copy of the foreign application specified in 35 U.S.C. 119(b) or PCT Rule 17 must, in any event, be filed before the patent is granted. In this situation, the claim to foreign priority benefits can be perfected only by way of a reissue application in accordance with the rationale set forth in *Brenner v. State of Israel*, 158 USPQ 584. In addition to the filing of a reissue application, a petition to accept a delayed claim for priority under 35 U.S.C. 119(a)-(d) or (f) along with the surcharge as set forth in 37 CFR 1.17(t) and a statement that the entire delay between the date the claim was due under 37 CFR 1.55(a)(1) and the date claim was filed was unintentional must be submitted. (See 37 CFR 1.55(c)).

Therefore, the petition under 37 CFR 1.55(c) is DISMISSED without prejudice.

Any questions concerning this matter may be directed to Anthony Smith at (571) 272-3298.

Any further correspondence with respect to this matter may be filed electronically via EFS-Web selecting the document description "Petition for review and processing by the PCT Legal Office" or by mail addressed to Mail Stop PCT, Commissioner for Patents, Office of PCT Legal Administration, P.O. Box 1450, Alexandria, Virginia 22313-1450, with the contents of the letter marked to the attention of the Office of PCT Legal Administration.

Bryan Lin

Bryan Lin
PCT Legal Examiner
Office of PCT Legal Administration

UNITED STATES PATENT AND TRADEMARK OFFICE

Commissioner for Patents
United States Patent and Trademark Office
P.O. Box 1450
Alexandria, VA 22313-1450
www.uspto.gov

**MAILED**

JUN 22 2011

**PCT LEGAL ADMINISTRATION**

Keeling Patents and Trademarks, LLC
3310 Katy Freeway, 2nd Floor
Houston TX 77007

In re Patent no.: 7,128,170
Issue Date: October 31, 2006
Application No. 10/441,672
Filed: May 20, 2003
Attorney Docket No. 1164.002

: DECISION ON PETITION
: UNDER 37 CFR 1.78(a)(3) AND
: PETITION UNDER 37 CFR 1.55(C)

This decision is issued in response to applicant's "Subsequent Submission Concerning Applicant's Petition under 37 CFR 1.78(a)(3) to Accept an Unintentionally Delayed Domestic Priority Claim," filed February 15, 2011, seeking to correct a claim for priority by way of a Certificate of Correction to prior-filed International Patent Application PCT/GB2001/0055057, filed November 15, 2001. Additionally, this decision is in response to applicant's "Subsequent Submission Concerning Applicant's Petition under 37 CFR 1.55(c) to Accept an Unintentionally Delayed Foreign Priority Claim" filed February 17, 2011.

*Petition under 37 CFR 1.78(a)(3)*

A review of the file record fails to disclose that a claim for the benefit of priority to the above-noted, prior-filed international application was made within the time period set forth in 37 CFR 1.78(a)(2)(ii).

The instant application was filed February 14, 2011. Therefore, since this application was filed after November 29, 2000, a petition under 37 CFR 1.78(a)(3), along with submission of a Certificate of Correction, is the appropriate avenue of relief to accept a late claim for the benefit of priority to a prior-filed international application after issuance of the application into a patent. As provided in MPEP § 1481.03, where 35 U.S.C. 120 and 365(c) priority based on an international application is to be asserted or corrected in a patent via a Certificate of Correction, the following conditions must be satisfied:

(A) all requirements set forth in 37 CFR 1.78(a)(1) must have been met in the application which became the patent to be corrected;

(B) it must be clear from the record of the patent and the parent application(s) that priority is appropriate (see MPEP § 201.11);

(C) the patentee must submit together with the request for the certificate, copies of documentation showing designation of states and any other information needed to make it clear from the record that the

35 U.S.C. 120 priority is appropriate (see MPEP 201.13(b) as to the requirements for 35 U.S.C. 120 priority based on an international application; and

(D) a grantable petition to accept an unintentionally delayed claim for the benefit of a prior application must be filed, including a surcharge as set forth in 37 CFR 1.17(t), as required by 37 CFR 1.78(a)(3).

As the instant petition for acceptance of an unintentionally delayed claim for the benefit of priority under 35 U.S.C. § 120 and 365(c) to the above-noted, prior-filed international application satisfies conditions (A) - (D), the petition is granted.

The petition under 37 CFR 1.78(a)(3) is GRANTED.

*Petition under 37 CFR 1.55(c)*

Further, applicant requests the Office to acknowledge the claim of foreign priority (Great Britain application number 0028243.4, filed November 20, 2000) on the Official Filing Receipt. As previously stated, pursuant to 37 CFR 1.55(a)(2), the claim for priority and the certified copy of the foreign application specified in 35 U.S.C. 119(b) or PCT Rule 17 must, in any event, be filed before the patent is granted. In this situation, the claim to foreign priority benefits can be perfected only by way of a reissue application in accordance with the rationale set forth in *Brenner v. State of Israel*, 158 USPQ 584.

Applicant contends Brenner does not apply to the present situation, rather, *In re Van Esdonk*, 187 USPQ 671, governs the present situation. Specifically, In re Van Esdonk involved the patent of a continuation application filed under former 37 CFR 1.60, it is proper to apply the holding of that case in similar factual circumstances to any patented application having benefits under 35 U.S.C. 120. This is primarily because a claim to foreign priority benefits in a continuing application, where the claim has been perfected in the parent application, constitutes in essence a mere affirmation of the applicant's previously expressed desire to receive benefits under 35 U.S.C. 119(a)-(d) or (f) for subject matter common to the foreign, parent, and continuing applications. However, *In re Van Esdonk* does not apply to this application because "in a U.S. national application filed under 35 U.S.C. 111(a), the certified copy of the foreign priority application must be provided to the Office by the applicant, or a copy of the foreign application must be received from a foreign office in accordance with 37 CFR 1.55(d)." See MPEP §1896. In other words, an application that claims domestic benefit of an international application under 35 U.S.C 365(c) cannot rely on any certified copy of a foreign priority application filed in the international application.

The petition under 37 CFR 1.55(c) is DISMISSED without prejudice.

Any questions concerning this matter may be directed to Anthony Smith at (571) 272-3298.

Any further correspondence with respect to this matter may be filed electronically via EFS-Web selecting the document description "Petition for review and processing by the PCT

Application No. 10/441,672

Legal Office" or by mail addressed to Mail Stop PCT, Commissioner for Patents, Office of PCT Legal Administration, P.O. Box 1450, Alexandria, Virginia 22313-1450, with the contents of the letter marked to the attention of the Office of PCT Legal Administration.

Bryan Lin

Bryan Lin
PCT Legal Examiner
Office of PCT Legal Administration

## SPE RESPONSE FOR CERTIFICATE OF CORRECTION

**Paper No.**:20110216

**DATE** : February 16, 2011 10/441744

**TO SPE OF** : ART UNIT 2816

**SUBJECT** : Request for Certificate of Correction on Patent No.: 6844768

A response is requested with respect to the accompanying request for a certificate of correction.

Please complete this form and return with file, within **7** days to:
**Certificates of Correction Branch - PK 3-910**
Palm location **7590** - Tel. No. 305-8201

With respect to the change(s) requested, correcting Office and/or Applicant's errors, should the patent read as shown in the certificate of correction? No new matter should be introduced, nor should the scope or meaning of the claims be changed.

**Thank You For Your Assistance**

Emma Yang
**Certificates of Correction Branch**

**The request for issuing the above-identified correction(s) is hereby:**
Note your decision on the appropriate box.

☒ **Approved** — **All** changes apply.

☐ **Approved in Part** — Specify below which changes **do not** apply.

☐ **Denied** — State the reasons for denial below.

**Comments:**

**SPE:** /Lincoln Donovan/ **Art Unit** 2816

**SPE RESPONSE FOR CERTIFICATE OF CORRECTION**

**Paper No.**:20110209

**DATE** : May 19, 2009

**TO SPE OF** : ART UNIT 3762

**SUBJECT** : Request for Certificate of Correction on Patent No.: 7,226,164

A response is requested with respect to the accompanying request for a certificate of correction.

Please complete this form and return with file, within **7** days to:
**Certificates of Correction Branch - ST (South Tower) 9A22**
Palm location **7590** - Tel. No. (703) 305-8309

With respect to the change(s) requested, correcting Office and/or Applicant's errors, should the patent read as shown in the certificate of correction? No new matter should be introduced, nor should the scope or meaning of the claims be changed.

**Thank You For Your Assistance** **Certificates of Correction Branch**

**The request for issuing the above-identified correction(s) is hereby:**

Note your decision on the appropriated box.

☒ **Approved** All changes apply.

☐ **Approved in Part** Specify below which changes **do not** apply.

☐ **Denied** State the reasons for denial below.

**Comments:**

A copy of the Examiner's Amendments and the Supplemental Notice of Allowance that the applicants submitted are accepted. In view of the submitted copies the certificate of correction is approved.

/NIKETA I PATEL/
Supervisory Patent Examiner.Art Unit 3762

UNITED STATES PATENT AND TRADEMARK OFFICE

Commissioner for Patents
United States Patent and Trademark Office
P.O. Box 1450
Alexandria, VA 22313-1450
www.uspto.gov

FOLEY & LARDNER LLP
150 EAST GILMAN STREET
P.O. BOX 1497
MADISON WI 53701-1497

**MAILED**

JAN 25 2011

**OFFICE OF PETITIONS**

| | | |
|---|---|---|
| In re Application of | : | |
| Kallio, et al. | : | |
| Application No. 10/442,183 | : | ON APPLICATION FOR |
| Filed: May 21, 2003 | : | PATENT TERM ADJUSTMENT |
| Atty Docket No. 088245-0148 | : | |

This is in response to the REQUEST FOR RECONSIDERATION OF PATENT TERM ADJUSTMENT FOR PATENT APPLICATION UNDER 37 C.F.R. § 1.705(b), filed December 1, 2010. Applicants submit that the correct patent term adjustment to be indicated on the patent is one thousand three hundred twenty-nine (1329) days, not one thousand eight (1008) days as calculated by the Office as of the mailing of the initial determination of patent term adjustment. Applicants request this correction solely on the basis that the Office will take in excess of three years to issue this patent.

As the instant application for patent term adjustment requests reconsideration of the patent term adjustment as it relates to the Office's failure to issue the patent within 3 years of the filing date, the application for patent term adjustment under 37 CFR 1.705(b) is **DISMISSED as PREMATURE**.

Knowledge of the actual date the patent issues is required to calculate the amount, if any, of additional patent term patentees are entitled to for Office failure to issue the patent within 3 years. See § 1.702(b). This is true even in this instance where a request for continued examination (RCE) was filed. The computer will not undertake the § 1.702(b) calculation until the actual date of issuance of the patent has been determined. Likewise, the computer will not calculate any further Office delay under § 1.702(a)(4) or applicant delay under § 1.704(c)(10) until the actual date of issuance of the patent has been determined. As such, the Office can not make a determination on the correctness of the patent term adjustment until the patent has issued.

Requesting reconsideration of the patent term adjustment to be indicated on the patent under 37 CFR 1.705(b) based on the initial determination of patent term adjustment and a projected issuance date of the patent or even the filing date of the request for continued examination is premature. Accordingly, it is appropriate to dismiss as premature such a request.

Rather than file an application for patent term adjustment under 37 CFR 1.705(b) contesting the 37 CFR 1.702(b) calculation at the time of the mailing of the notice of allowance, applicants are advised that they may wait until the time of the issuance of the patent and file a request for reconsideration of the patent term adjustment pursuant to 37 CFR 1.705(d). As the USPTO does not calculate the amount of time earned pursuant to 37 CFR 1.702(b) until the time of the issuance of the patent, the Office will consider any request for reconsideration of the patent term adjustment due to an error in the calculation of 37 CFR 1.702(b) to be timely if the request for reconsideration is filed within two months of the issuance of the patent. However, as to all other bases for contesting the initial determination of patent term adjustment received with the notice of allowance, applicants must timely file an application for patent term adjustment prior to the payment of the issue fee[1].

The Office acknowledges submission of the $200.00 fee set forth in 37 CFR 1.18(e) for consideration of the application for patent term adjustment under 37 CFR 1.705(b). This fee is required and will not be refunded.

Any request for reconsideration of the patent term adjustment indicated on the patent must be timely filed within 2 months after issuance pursuant to 37 CFR 1.705(d) and must include payment of the required fee under 37 CFR 1.18(e).

---

[1] For example, if an applicant disputes both the calculation of patent term adjustment under 37 CFR 1.702(a)(1) for Office failure to mail a first Office action or notice of allowance not later than fourteen months after the date on which the application was filed and under 37 CFR 1.702(b) for Office failure to issue a patent within three years of the actual filing date of the application, then applicant must still timely file an application for patent term adjustment prior to the payment of the issue fee to contest the calculation of Office delay in issuing a first Office action or notice of allowance. See 37 CFR 1.705(b) and 35 U.S.C. 154(b)(3)(B). A dispute as to the calculation of the §1.702(a)(1) period raised on request for reconsideration of patent term adjustment under 37 CFR 1.705(d) will be dismissed as untimely filed.

The Office of Data Management has been advised of this decision. This application is being referred to the Office of Data Management for issuance of the patent.

Telephone inquiries specific to this decision should be directed to the undersigned at (571) 272-3230.

Shirene Willis Brantley

Shirene Willis Brantley
Senior Petitions Attorney
Office of Petitions

UNITED STATES PATENT AND TRADEMARK OFFICE

Commissioner for Patents
United States Patent and Trademark Office
P.O. Box 1450
Alexandria, VA 22313-1450
www.uspto.gov

**CHRISTIE, PARKER & HALE, LLP**
**PO BOX 7068**
**PASADENA CA 91109-7068**

MAILED
SEP 27 2010
OFFICE OF PETITIONS

| | | |
|---|---|---|
| In re Application of | : | |
| James Kang, et al. | : | |
| Application No. 10/442,707 | : | NOTICE |
| Patent No. 7,073,560 | : | |
| Filed: May 20, 2003 | : | |
| Attorney Docket No. 50386/RAG/L471 | | |

This is a notice regarding your request for acceptance of a fee deficiency submission under 37 CFR 1.28.

The Office no longer investigates or rejects original or reissue patent under 37 CFR 1.56. **1098 Off. Gaz. Pat. Office 502 (January 3, 1989)**. Therefore, nothing in this Notice is intended to imply that an investigation was done.

Your fee deficiency submission under 37 CFR 1.28 is hereby **ACCEPTED**.

This patent is no longer entitled to small entity status. Accordingly, all future fees paid in this patent must be paid at the large entity rate.

Inquiries related to this communication should be directed to the undersigned at (571) 272-2991.

/Terri Johnson/
Terri Johnson
Petitions Examiner
Office of Petitions

PTO/SB/66 (03-09)
Approved for use through 03/31/2012. OMB 0651-0016
U.S. Patent and Trademark Office: U.S. DEPARTMENT OF COMMERCE
Under the Paperwork Reduction Act of 1995, no persons are required to respond to a collection of information unless it displays valid OMB control number.

# PETITION TO ACCEPT UNINTENTIONALLY DELAYED PAYMENT OF MAINTENANCE FEE IN AN EXPIRED PATENT (37 CFR 1.378(c))

| Patent Number | Issue Date (YYYY-MM-DD) | Application Number | Filing Date (YYYY-MM-DD) | Docket Number (if applicable) |
|---|---|---|---|---|
| 6,981,286 | 2006-01-03 | 10442763 | 2003-05-21 | 080103-0067 |

CAUTION: Maintenance fee (and surcharge, if any) payment must correctly identify: (1) the patent number and (2) the application number of the actual U.S. application leading to issuance of that patent to ensure the fee(s) is/are associated with the correct patent. 37 CFR 1.366(c) and (d).

SMALL ENTITY
☒ Patentee claims, or has previously claimed, small entity status. See 37 CFR 1.27.

LOSS OF ENTITLEMENT TO SMALL ENTITY STATUS
☐ Patentee is no longer entitled to small entity status. See 37 CFR 1.27(g)

| NOT Small Entity | Fee | Code | Small Entity | Fee | Code |
|---|---|---|---|---|---|
| ○ | 3 ½ year | (1551) | ◉ | 3 ½ year | (2551) |
| ○ | 7 ½ year | (1552) | ○ | 7 ½ year | (2552) |
| ○ | 11 ½ year | (1553) | ○ | 11 ½ year | (2553) |

SURCHARGE
The surcharge required by 37 CFR 1.20(i)(2) (Fee Code 1558) must be paid as a condition of accepting unintentionally delayed payment of the maintenance fee.

MAINTENANCE FEE (37 CFR 1.20(e)-(g))
The appropriate maintenance fee must be submitted with this petition.

STATEMENT
THE UNDERSIGNED CERTIFIES THAT THE DELAY IN PAYMENT OF THE MAINTENANCE FEE TO THIS PATENT WAS UNINTENTIONAL

PETITIONER(S) REQUEST THAT THE DELAYED PAYMENT OF THE MAINTENANCE FEE BE ACCEPTED AND THE PATENT REINSTATED

THIS PORTION MUST BE COMPLETED BY THE SIGNATORY OR SIGNATORIES

37 CFR 1.378(d) states: "Any petition under this section must be signed by an attorney or agent registered to practice before the Patent and Trademark Office, or by the patentee, the assignee, or other party in interest."

I certify, in accordance with 37 CFR 1.4(d)(4) that I am

◉ An attorney or agent registered to practice before the Patent and Trademark Office

○ A sole patentee

○ A joint patentee; I certify that I am authorized to sign this submission on behalf of all the other patentees.

○ A joint patentee; all of whom are signing this e-petition

○ The assignee of record of the entire interest

Under the Paperwork Reduction Act of 1995, no persons are required to respond to a collection of information unless it displays valid OMB control number.

| Patent Practitioner | | | |
|---|---|---|---|
| A signature of the applicant or representative is required in accordance with 37 CFR 1.33 and 10.18. Please see 37 CFR 1.4(d) for the form of the signature | | | |
| Signature | /Bernard P. Codd/ | Date (YYYY-MM-DD) | 2010-08-05 |
| Name | Bernard P. Codd | Registration Number | 46429 |

This collection of information is required by 37 CFR 1.378(c). The information is required to obtain or retain a benefit by the public which is to file (and by the USPTO to process) an application. Confidentiality is governed by 35 U.S.C. 122 and 37 CFR 1.11 and 1.14. This collection is estimated to take 1 hour to complete, including gathering, preparing, and submitting the completed application form to the USPTO. Time will vary depending upon the individual case. Any comments on the amount of time you require to complete this form and/ or suggestions for reducing this burden, should be sent to the Chief Information Officer, U.S. Patent and Trademark Office, U.S. Department of Commerce, P.O. Box 1450, Alexandria, VA 22313-1450. DO NOT SEND FEES OR COMPLETED FORMS TO THIS ADDRESS. **This form can only be used when in conjunction with EFS-Web. If this form is mailed to the USPTO, it may cause delays in reinstating the patent.**

# Privacy Act Statement

The Privacy Act of 1974 (P.L. 93-579) requires that you be given certain information in connection with your submission of the attached form related to a patent application or patent. Accordingly, pursuant to the requirements of the Act, please be advised that: (1) the general authority for the collection of this information is 35 U.S.C. 2(b)(2); (2) furnishing of the information solicited is voluntary; and (3) the principal purpose for which the information is used by the U.S. Patent and Trademark Office is to process and/or examine your submission related to a patent application or patent. If you do not furnish the requested information, the U.S. Patent and Trademark Office may not be able to process and/or examine your submission, which may result in termination of proceedings or abandonment of the application or expiration of the patent.

The information provided by you in this form will be subject to the following routine uses:

1. The information on this form will be treated confidentially to the extent allowed under the Freedom of Information Act (5 U.S.C. 552) and the Privacy Act (5 U.S.C. 552a). Records from this system of records may be disclosed to the Department of Justice to determine whether the Freedom of Information Act requires disclosure of these records.

2. A record from this system of records may be disclosed, as a routine use, in the course of presenting evidence to a court, magistrate, or administrative tribunal, including disclosures to opposing counsel in the course of settlement negotiations.

3. A record in this system of records may be disclosed, as a routine use, to a Member of Congress submitting a request involving an individual, to whom the record pertains, when the individual has requested assistance from the Member with respect to the subject matter of the record.

4. A record in this system of records may be disclosed, as a routine use, to a contractor of the Agency having need for the information in order to perform a contract. Recipients of information shall be required to comply with the requirements of the Privacy Act of 1974, as amended, pursuant to 5 U.S.C. 552a(m).

5. A record related to an International Application filed under the Patent Cooperation Treaty in this system of records may be disclosed, as a routine use, to the International Bureau of the World Intellectual Property Organization, pursuant to the Patent Cooperation Treaty.

6. A record in this system of records may be disclosed, as a routine use, to another federal agency for purposes of National Security review (35 U.S.C. 181) and for review pursuant to the Atomic Energy Act (42 U.S.C. 218(c)).

7. A record from this system of records may be disclosed, as a routine use, to the Administrator, General Services, or his/her designee, during an inspection of records conducted by GSA as part of that agency's responsibility to recommend improvements in records management practices and programs, under authority of 44 U.S.C. 2904 and 2906. Such disclosure shall be made in accordance with the GSA regulations governing inspection of records for this purpose, and any other relevant (i.e., GSA or Commerce) directive. Such disclosure shall not be used to make determinations about individuals.

8. A record from this system of records may be disclosed, as a routine use, to the public after either publication of the application pursuant to 35 U.S.C. 122(b) or issuance of a patent pursuant to 35 U.S.C. 151. Further, a record may be disclosed, subject to the limitations of 37 CFR 1.14, as a routine use, to the public if the record was filed in an application which became abandoned or in which the proceedings were terminated and which application is referenced by either a published application, an application open to public inspections or an issued patent.

9. A record from this system of records may be disclosed, as a routine use, to a Federal, State, or local law enforcement agency, if the USPTO becomes aware of a violation or potential violation of law or regulation.

UNITED STATES PATENT AND TRADEMARK OFFICE

Commissioner for Patents
United States Patent and Trademark Office
P.O. Box 1450
Alexandria, VA 22313-1450
www.uspto.gov

In re Patent No. 6981286
Issue Date: January 3,2006
Application No. 10442763
Filed: May 21,2003
Attorney Docket No. 103960-469-NP

:
:DECISION GRANTING PETITION
:UNDER 37 CFR 1.378(c)
:

This is a decision on the electronic petition, filed August 5,2010 ,under 37 CFR 1.378(c) to accept the unintentionally delayed payment of the 3.5 year maintenance fee for the above-identified patent.

The petition is **GRANTED**.

The maintenance fee is accepted, and the above-identified patent reinstated as of August 5,2010 .
This decision also constitutes notice that the fee has been accepted. An electronic copy of the petition and this decision has been created as an entry in the Image File Wrapper. Nevertheless, petitioner should print and retain an independent copy.

Telephone inquiries related to this electronic decision should be directed to the Electronic Business Center at 1-866-217-9197.

UNITED STATES PATENT AND TRADEMARK OFFICE

Commissioner for Patents
United States Patent and Trademark Office
P.O. Box 1450
Alexandria, VA 22313-1450
www.uspto.gov

MAILED

JAN 27 2011

PCT LEGAL ADMINISTRATION

Capitol City TechLaw, PLLC
PO BOX 1210
VIENNA VA 22183

| | |
|---|---|
| In re Application of | : |
| Leif | : DECISION ON PETITION |
| Application No. 10/443,026 | : |
| Filed: May 22, 2003 | : UNDER 37 CFR 1.78(a)(3) |
| Attorney Docket No. 315-0052/US | : |
| For: Radiometric Measuring Of Thin Fluid Films | : |

This is a decision on the petition under 37 CFR 1.78(a)(3), filed December 21, 2009 and supplemented on September 23, 2010, to accept an unintentionally delayed claim under 35 U.S.C. § 120 for the benefit of priority to the prior-filed international application set forth in the amendment filed 20 September 2010 under 37 CFR 1.312.

The petition is **GRANTED**.

The present nonprovisional application was filed after November 29, 2000, and the claim herein for the benefit of priority to the prior-filed application is submitted after expiration of the period specified in 37 CFR 1.78(a)(2)(ii). Therefore, this is a proper petition under 37 CFR 1.78(a)(3).

A petition for acceptance of a claim for late priority under 37 CFR 1.78(a)(3) is only applicable to those applications filed on or after November 29, 2000. Further, the petition is appropriate only after the expiration of the period specified in 37 CFR 1.78(a)(2)(ii). In addition, the petition under 37 CFR 1.78(a)(3) must be accompanied by:

(1) the reference required by 35 U.S.C. § 120 and 37 CFR 1.78(a)(2)(i) of the prior-filed application, unless previously submitted;
(2) the surcharge set forth in § 1.17(t); and
(3) a statement that the entire delay between the date the claim was due under 37 CFR 1.78(a)(2)(ii) and the date the claim was filed was unintentional. The Director may require additional information where there is a question whether the delay was unintentional.

The petition complies with the requirements for a grantable petition under 37 CFR 1.78(a)(3) in that (1) a reference to the prior-filed application has been included in an amendment to the first sentence of the specification following the title, as provided by 37 CFR 1.78(a)(2)(iii); (2) the surcharge fee required by 37 CFR 1.17(t) has been submitted; and (3) the petition contains a

statement of unintentional delay which differs slightly from the prescribed language. Said statement is being construed as a statement that the entire delay between the date the claim was due under 37 CFR 1.78(a)(2)(ii) and the date the claim was filed was unintentional. Applicants are required to promptly notify this Office if such interpretation is incorrect. Accordingly, having found that the instant petition for acceptance of an unintentionally delayed claim for the benefit of priority under 35 U.S.C. § 120 to the prior-filed application satisfies the conditions of 37 CFR 1.78(a)(3), the petition is granted.

***The granting of the petition to accept the delayed benefit claim to the prior-filed application under 37 CFR 1.78(a)(3) should not be construed as meaning that this application is entitled to the benefit of the prior-filed applications. In order for this application to be entitled to the benefit of the prior-filed applications, all other requirements under 35 U.S.C. § 120 and 37 CFR 1.78(a)(1) and (a)(2) must be met. Similarly, the fact that the corrected Filing Receipt accompanying this decision on petition includes the prior-filed application should not be construed as meaning that applicant is entitled to the claim for benefit of priority to the prior-filed applications noted thereon. Accordingly, the examiner will, in due course, consider this benefit claim and determine whether this application is entitled to the benefit of the earlier filing date.***

A corrected Filing Receipt, which includes the priority claim to the prior-filed international application, accompanies this decision on petition.

Any inquiries concerning this decision may be directed to George Dombroske. All other inquiries concerning either the examination procedures or status of the application should be directed to the Technology Center.

This matter is being referred to Technology Center Art Unit 2884 for appropriate action on the amendment filed September 20, 2010, including consideration by the examiner of applicant's entitlement to claim benefit of priority under 35 U.S.C. § 120 to the prior-filed application.

/George Dombroske/
George Dombroske
PCT Legal Examiner
Office of PCT Legal Administration

/Boris Milef/
Boris Milef
PCT Legal Examiner
Office of PCT Legal Administration

**ATTACHMENT**: Corrected Filing Receipt

UNITED STATES PATENT AND TRADEMARK OFFICE

Commissioner for Patents
United States Patent and Trademark Office
P.O. Box 1450
Alexandria, VA 22313-1450
www.uspto.gov

MINTZ, LEVIN, COHN, FERRIS, GLOVSKY AND POPEO, P.C.
ONE FINANCIAL CENTER
BOSTON MA 02111

MAILED
AUG 04 2010
OFFICE OF PETITIONS

| | | |
|---|---|---|
| In re Application of | : | |
| Perkins et al. | : | ON REQUEST FOR |
| Application No. 10/443125 | : | RECONSIDERATION OF |
| Filing or 371(c) Date: 05/20/2003 | : | PATENT TERM ADJUSTMENT |
| Attorney Docket Number: | : | |
| 39700-770F01US/NC30652US | : | |

This is a decision on the "REQUEST FOR RECONSIDERATION OF PATENT TERM ADJUSTMENT," filed March 17, 2010. Applicants petition for reconsideration of the patent term adjustment calculation to 1258 days, not 800 days as calculated by the Office as of the mailing of the initial determination of patent term adjustment. Applicants request this correction based upon (1) an assertion that the Office erred in failing to calculate a delay of 30 days, and (2) on the basis that the Office will take in excess of three years to issue this patent. The petition is properly treated under 37 C.F.R. § 1.705(b).

The Application for Patent Term Adjustment Including Request for Reconsideration of Patent Term Adjustment ("PTA") under 37 CFR 1.705(b), as it relates to the assertion that the Office erred in failing to calculate a delay of 30 days is **DISMISSED**.

The Application for Patent Term Adjustment Including Request for Reconsideration of Patent Term Adjustment ("PTA") under 37 CFR 1.705(b), as it relates to the Office's failure to issue the patent within 3 years of the filing date, the application for patent term adjustment under 37 CFR 1.705(b) is **DISMISSED as PREMATURE**.

Applicants provide that on December 17, 2009, this Office mailed a Notice of Allowance and Issue Fee Due, including a Determination of Patent Term Adjustment under 35 U.S.C. 154(b) in the above-identified application. The Notice stated that the patent term adjustment (PTA) to date is 800 days.

On March 17, 2010, Applicants timely submitted the instant application for patent term adjustment[1]. Applicants request that the Determination of Patent Term Adjustment be corrected from 800 days, as indicated on the Determination of PTA mailed December 17, 2009, to an adjustment of 1258 days. Applicants assert that the Office erred in failing to calculate a reduction of 30 days pursuant to 37 CFR 1.704(b), in connection with the filing of a Notice of Appeal on

[1] PALM records show that the Issue Fee payment was received in the Office on March 17, 2010.

August 9, 2007, more than three months after the mailing of a final Office action, mailed April 10, 2007.

As to the assertion that the Office erred in failing to calculate a reduction of 30 days in connection with the filing of a Notice of Appeal on August 9, 2007, the calculations have been reviewed and are found to be correct. For Patent Term Adjustment purposes, applicant is not considered to have delayed since the amendment after final was filed within three months of the date of the final rejection, and as a result of the pre-appeal brief conference the finality of the Office action was withdrawn.

As to the Office's failure to issue the patent within 3 years of the filing date, knowledge of the actual date the patent issues is required to calculate the amount, if any, of additional patent term patentee is entitled to for Office failure to issue the patent within 3 years. See § 1.702(b). (This is true even where a request for continued examination (RCE) was filed). The computer will not undertake the § 1.702(b) calculation until the actual date of issuance of the patent has been determined. Likewise, the computer will not calculate any further Office delay under § 1.702(a)(4) or applicant delay under § 1.704(c)(10) until the actual date of issuance of the patent has been determined. As such, the Office can not make a determination on the correctness of the patent term adjustment until the patent has issued.

Requesting reconsideration of the patent term adjustment to be indicated on the patent under 37 CFR 1.705(b) based on the initial determination of patent term adjustment and a projected issuance date of the patent (or even the filing date of the request for continued examination) is premature. Accordingly, it is appropriate to dismiss as premature such a request.

Rather than file an application for patent term adjustment under 37 CFR 1.705(b) contesting the 37 CFR 1.702(b) calculation at the time of the mailing of the notice of allowance, applicants are advised that they may wait until the time of the issuance of the patent and file a request for reconsideration of the patent term adjustment pursuant to 37 CFR 1.705(d). As the USPTO does not calculate the amount of time earned pursuant to 37 CFR 1.702(b) until the time of the issuance of the patent, the Office will consider any request for reconsideration of the patent term adjustment due to an error in the calculation of 37 CFR 1.702(b) to be timely if the request for reconsideration is filed within two months of the issuance of the patent. However, as to all other bases for contesting the initial determination of patent term adjustment received with the notice of allowance, applicant must timely file an application for patent term adjustment prior to the payment of the issue fee[2].

The Office acknowledges submission of the $200.00 fee set forth in 37 CFR 1.18(e) for consideration of the application for patent term adjustment under 37 CFR 1.705(b).

---

[2] For example, if applicant disputes both the calculation of patent term adjustment under 37 CFR 1.702(a)(1) for Office failure to mail a first Office action or notice of allowance not later than fourteen months after the date on which the application was filed and under 37 CFR 1.702(b) for Office failure to issue a patent within three years of the actual filing date of the application, then applicant must still timely file an application for patent term adjustment prior to the payment of the issue fee to contest the calculation of Office delay in issuing a first Office action or notice of allowance. See 37 CFR 1.705(b) and 35 U.S.C. 154(b)(3)(B). A dispute as to the calculation of the §1.702(a)(1) period raised on request for reconsideration of patent term adjustment under 37 CFR 1.705(d) will be dismissed as untimely filed.

Any request for reconsideration of the patent term adjustment indicated on the patent, including any request as it relates to the Office's failure to issue the patent within 3 years of the filing date, must be timely filed within 2 months after issuance pursuant to 37 CFR 1.705(d) and **must** include payment of the required fee under 37 CFR 1.18(e).

The Office of Data Management has been advised of this decision. This application is being referred to the Office of Data Management for issuance of the patent. The patent term adjustment indicated on the patent (as shown on the Issue Notification mailed about three weeks prior to patent issuance) will include any additional adjustment accrued both for Office delay in issuing the patent more than four months after payment of the issue fee and satisfaction of all outstanding requirements, and for the Office taking in excess of three years to issue the patent (to the extent that the three-year period does not overlap with periods already accorded).

Telephone inquiries specific to this matter should be directed to Attorney Derek Woods at (571) 272-3232.

Anthony Knight
Director
Office of Petitions

## SPE RESPONSE FOR CERTIFICATE OF CORRECTION

DATE : 08/23/11

TO SPE OF : ART UNIT 2453

SUBJECT : Request for Certificate of Correction for Appl. No.: 10443147 Patent No.: 7747731

CofC mailroom date: 08/16/11

Please respond to this request for a certificate of correction within 7 days.

**FOR IFW FILES:**

Please review the requested changes/corrections as shown in the **COCIN** document(s) in the IFW application image. No new matter should be introduced, nor should the scope or meaning of the claims be changed.

Please complete the response (see below) and forward the completed response to scanning using document code **COCX**.

**FOR PAPER FILES:**

Please review the requested changes/corrections as shown in the attached certificate of correction. Please complete this form (see below) and forward it with the file to:

**Certificates of Correction Branch (CofC)**
**Randolph Square – 9D10-A**
**Palm Location 7580**
*You can fax the Directors/SPE response to 571-273-3421*

Note: _____

_____

Lamonte Newsome

**Certificates of Correction Branch**

**571-272-3421**

**Thank You For Your Assistance**

**The request for issuing the above-identified correction(s) is hereby:**
Note your decision on the appropriate box.

- ☐ **Approved** — **All** changes apply.
- X **Approved in Part** — Specify below which changes **do not** apply.
- ☐ **Denied** — State the reasons for denial below.

**Comments:** Please enter the requested changes to Column 7, line 25 and to Column 8, line 41. Please do not enter the change to Column 10, line 10 as it would render the claim language confusing.

## SPE RESPONSE FOR CERTIFICATE OF CORRECTION

/Krista Zele/

SPE, AU 2453

UNITED STATES PATENT AND TRADEMARK OFFICE

Commissioner for Patents
United States Patent and Trademark Office
P.O. Box 1450
Alexandria, VA 22313-1450
www.uspto.gov

VIDAS, ARRETT & STEINKRAUS, P.A.
SUITE 400, 6640 SHADY OAK ROAD
EDEN PRAIRIE MN 55344

MAILED
DEC 13 2010
OFFICE OF PETITIONS

In re Application of :
Paul H. Burmeister et al. :
Application No. 10/443,231 : ON PETITION
Filed: May 21, 2003 :
Attorney Docket No: S63.2Q-4944-US05

This is a decision on the petition filed September 23, 2010 under 37 CFR 1.182, for withdrawal of the terminal disclaimer filed July 14, 2006.

The petition is **GRANTED**.

The examiner responsible for the above-identified application has indicated that the terminal disclaimer filed July 14, 2006 does not apply to any of the claims as currently amended. Accordingly, on petition the terminal disclaimer is withdrawn.

The petition fee in the amount of $400.00 has been charged to the credit card provided.

This matter is being referred to Technology Center 3774 to correct the records related to the terminal disclaimer filed July 14, 2006 consistent with this decision.

Telephone inquiries concerning this matter may be directed to the undersigned Petitions Attorney at (571) 272-3212.

Patricia Faison-Ball
Senior Petitions Attorney
Office of Petitions

UNITED STATES PATENT AND TRADEMARK OFFICE

UNITED STATES DEPARTMENT OF COMMERCE
United States Patent and Trademark Office
Address: COMMISSIONER FOR PATENTS
P.O. Box 1450
Alexandria, Virginia 22313-1450
www.uspto.gov

| APPLICATION NO. | FILING DATE | FIRST NAMED INVENTOR | ATTORNEY DOCKET NO. | CONFIRMATION NO. |
|---|---|---|---|---|
| 10/443,231 | 05/21/2003 | Paul H. Burmeister | S63.2-4944-US05 | 4764 |

490 7590 02/17/2011
VIDAS, ARRETT & STEINKRAUS, P.A.
SUITE 400, 6640 SHADY OAK ROAD
EDEN PRAIRIE, MN 55344

| EXAMINER |
|---|
| PREBILIC, PAUL B |

| ART UNIT | PAPER NUMBER |
|---|---|
| 3774 | |

| MAIL DATE | DELIVERY MODE |
|---|---|
| 02/17/2011 | PAPER |

**Please find below and/or attached an Office communication concerning this application or proceeding.**

The time period for reply, if any, is set in the attached communication.

UNITED STATES PATENT AND TRADEMARK OFFICE

Commissioner for Patents
United States Patent and Trademark Office
P.O. Box 1450
Alexandria, VA 22313-1450
www.uspto.gov

VIDAS, ARRETT & STEINKRAUS, P.A.
SUITE 400, 6640 SHADY OAK ROAD
EDEN PRAIRIE MN 55344

| | |
|---|---|
| In re Application of:<br>BURMEISTER, PAUL H. et al<br>Serial No. 10/443,231<br>Filed: May 21, 2003<br>Docket: S63.2-4944-US05<br>Title: TISSUE SUPPORTING DEVICES | DECISION ON PETITION |

This is a decision on the petition filed February 8, 2011 requesting withdrawal of the outstanding Office action of December 20, 2010 and issuance of Notice of Allowance because the re-opening prosecution does not comply with 37 CFR § 1.198 and 1.104 or MPEP § 707.07(g).

The petition is DENIED.

The relevant record shows that:

1. The examiner promulgated the Examiner's Answer on December 22, 2008. In the Examiner's Answer, claims 35-36 and 38 were rejected under 35 U.S.C. 103(a) as obvious over Pinchasik (US 5,449,373) in view of Porter (US 5,064,435). Claim 37 was rejected under 35 U.S.C. 103(a) as being unpatentable over Pinchasik and Porter as applied to claims 35, 36, and 38 above, and further in view of Fischell et al (US 5,879,370).

2. On August 17, 2010 the Board reversed the examiner's rejection of claims 35-38.

3. On September 23, 2010, the applicant filed an amendment cancelling allowable claims 32-34 and 39-42 with only claims 35-38 remain unchanged.

4. In response to the amendment after the Board decision filed on September 23, 2010, the examiner entered the amendment and re-opened prosecution. On December 20, 2010, the examiner promulgated a non-final Office action rejecting claims 35 and 36 under 35 USC § 102(b) as being anticipated by Wolff (US 5,104,404). Claim 37 was rejected under 35 U.S.C. 103(a) as being unpatentable over Wolff (US 5,104,404) in view of Fischell et al (US 5,879,370).

Claim 38 was rejected under 35 U.S.C. 103(a) as being unpatentable over Wolff (US 5,104,404) in view of Fischell et al (US 5,879,370) or Pinchuk (US 5,019,090). The non-final Office action of January 19, 2010 was approved and signed by a TC Director in accordance with 37 CFR § 1.198.

5. On February 8, 2011, petitioner filed the present petition, arguing that the non-final Office action of December 20, 2010 reopening prosecution does not comply with 37 CFR 1.198; 37 CFR 1.104; or MPEP 707.07(g). It also violates the Administrative Procedure Act, the applicant's right of appeal under 35 USC § 134(a) and the US Constitution due process clause. Petitioner also argues that the action reopening prosecution does not address (1) for matters not already adjudicated and (2) sufficient cause being shown. The requirements of 37 CFR §1.198 have not been met in this case.

## Analysis and Discussion

In the petition, petitioner argues that there is no matter "not already adjudicated". Petitioner argues that the examiner's rejection of claims 35 and 36 based on the Palmaz patent under 36 USC §102 and alternatively in view of Porter patent under 35 USC § 103 were raised in the final rejection of June 4, 2008 and argued by the applicant in the Appeal Brief of September 30, 2008. The examiner later withdrew the rejection to simplify the appealable issue as stated in the Examiner's Answer of December 22, 2008. Therefore, petitioner opines that the withdrawal of the rejection constitutes adjudication under the law. These arguments are not persuasive. The rejection of claims based on the Palmaz patent under 36 USC §102 and alternatively in view of Porter patent under 35 USC § 103 was never presented to the Board. The particular issues involved in the rejection were never adjudicated by the Board. The examiner should not ignore the prior art references and allow the claims. Therefore, the re-opening of the prosecution is proper under the circumstances.

In the petition, petitioner also argues that the new claim rejection under 35 U.S.C. §102 as anticipated by Wolff patent was based on the same rational of the abandoned arguments or position. Therefore, the new rejections based on the new prior art reference also violate 37 CFR §1.198 and bound by the doctrine of collateral estoppel. This line of arguments is also not persuasive. The rejection of claims 35 and 36 under 35 USC § 102(b) as being anticipated by Wolff (US 5,104,404) was not present in the Examiner's Answer of December 22, 2008. There is no opportunity for the Board to adjudicate this 35 USC § 102 rejection. The issues under 35 USC § 102 rejection based on the Wolff patent are clearly directed to the matters "not already adjudicated" under 35 USC § 103. The statutory basis of the rejections in the Board decision and the current rejections of claims are totally different. The test of patentability of claim subject matter between 35 USC § 102 and § 103 is also different. Therefore, it can not be said that the current new rejections of the claims constitute matters "not already adjudicated". Again, it must be noted that the examiner has never applied the Wolff patent against the claims in the Examiner's Answer of December 22, 2008. The new issues presented by the new set of the references clearly were not present in the earlier appeal nor were adjudicated by the Board. Under the circumstances, it is proper for the TC Director to authorize the primary examiner to re-open prosecution for the purposes of entering the new grounds of rejections in accordance MPEP § 1214.04 and 37 CFR §1.198. However, the delay in applying the new references is sincerely

regretted. Any past delay may be remedied by an adjustment of patent terms when the application is finally found allowable.

Finally, in the petition, petitioner also argues that the examiner did not show any "sufficient cause" for re-opening prosecution. This line of arguments is not persuasive because the prior art references as applied in the non-final rejection clearly indicate a question of patentability of claims 35-38. The Director should not direct an examiner to ignore the prior art references and allow the claims. It is the examiner's duty to examine patent applications and allow patentable claims. In this case, the delay is regretted that the examiner has discovered and applied new prior art against the claims under 35 USC § 102 and § 103. It must be pointed out that the authority to permit, under 37 CFR 1.198, the reopening of prosecution subsequent to a decision by the Board has been delegated to the Technology Center Director. See MPEP 1002.02(c). Since the Office action that reopened prosecution was signed by a Technology Center Director, thus indicating her approval, the statement of the rejections in that Office action is all the justification required under 37 CFR § 1.198 for reopening prosecution.

In the petition, petitioner raises various issues regarding the US Constitution due process and violation of the Administrative Procedure Act. In particular, petitioner challenges the constitutionality and fairness of the procedures followed by the USPTO. The procedures challenged by the petitioner are based upon the Constitution, the United States Code, the Code of Federal Regulations, case law and their subsequent interpretation by the court system and the USPTO. The Office does not posses the authority to modify or reinterpret these procedures. Therefore, the petitioner's challenges based on the constitutionality cannot be appropriately addressed by the current petitions.

While a tone of frustration is apparent from the petition, the applicant needs to realize that the examiner is required to operate within the bounds of established legal standards and precedence. There are no points achieved for performing one's obligated duties. If the applicant believes that the examiner has erred in his judgment, a proper course of action would be to file an appeal brief to have the examiner's rejection reversed. The applicant has the right to appeal the examiner's patentability determination to the Board if the applicant still disagrees with the stated position of the examiner. Therefore, the requested relief for allowance of the claims can not be granted.

## Conclusion

For the foregoing reasons, the relief requested by the petitioner will not be granted. In particular, the non-final rejection of December 20, 2010 remains in effect. The non-final rejection with a TC Director's authorization of re-opening of prosecution mailed on December 20, 2010 is deemed proper in accordance with MPEP § 1214.04 and 37 CFR § 1.198. Petitioner is reminded that the mere filing of a petition will not stay any period for reply that may be running against the application, nor act as a stay of other proceedings as stated in (37 CFR 1.181(f)[1].

[1] 37 CFR 1.181(f): The mere filing of a petition will not stay any period for reply that may be running against the application, nor act as a stay of other proceedings. Any petition under this part not filed within two months of the mailing date of the action or notice from which relief is requested may be dismissed as untimely, except as otherwise provided. This two-month period is not extendable.

The application is being forwarded to the examiner via the Supervisory Patent Examiner of Art Unit 3774 for preparation of an Office action in response to the rule 111 amendment filed on February 8, 2011. Any request for reconsideration of this decision must be submitted within TWO (2) MONTHS from the mail date of this decision, 37 CFR 1.181(f). No extension of time under 37 CFR 1.136(a) is permitted. The reconsideration request should include a cover letter entitled "Renewed Petition under 37 CFR 1.181" and directed to the Office of the Deputy Commissioner for Patent Examination Policy at Mail Stop Petition, Commissioner for Patents, P.O. Box 1450, Alexandria, Virginia 22313-1450. See MPEP 1002.02(b).

Any inquiry regarding this decision should be directed to Henry Yuen, Special Programs Examiner, at (571) 272-4856.

The petition is DENIED.

Donald T. Hajec, Director
Technology Center 3700

UNITED STATES PATENT AND TRADEMARK OFFICE

Commissioner for Patents
United States Patent and Trademark Office
P.O. Box 1450
Alexandria, VA 22313-1450
www.uspto.gov

**UNILEVER PATENT GROUP**
**800 SYLVAN AVENUE**
**AG WEST S. WING**
**ENGLEWOOD CLIFFS NJ 07632-3100**

**MAILED**
**DEC 09 2011**
**OFFICE OF PETITIONS**

| | | |
|---|---|---|
| In re Application of | : | |
| Zhang et al. | : | |
| Application No. 10/443,396 | : | DECISION ON PETITION |
| Filed: May 22, 2003 | : | |
| Attorney Docket No. J6843(C) | : | |

This is a decision on the petition under the unintentional provisions of 37 CFR 1.137(b), filed October 31, 2011, to revive the above-identified application.

The petition is **GRANTED**.

This application became abandoned for failure to timely pay the issue and publication fees on or before October 28, 2011, as required by the Notice of Allowance and Fee(s) Due mailed July 28, 2011. Accordingly, the date of abandonment of this application is October 31, 2011. A Notice of Abandonment was mailed November 7, 2011.

The petition satisfies the requirements of 37 CFR 1.137(b) in that petitioner has supplied (1) the reply in the form of payment of the issue fee of $1,740.00 and the publication fee of $300.00, (2) the petition fee of $1,860.00; and (3) a proper statement of unintentional delay.

Telephone inquiries concerning this decision should be directed to the undersigned at (571) 272-7751.

This application is being referred to the Office of Data Management for processing into a patent.

/Joan Olszewski/
Joan Olszewski
Petitions Examiner
Office of Petitions

UNITED STATES PATENT AND TRADEMARK OFFICE

UNITED STATES DEPARTMENT OF COMMERCE
United States Patent and Trademark Office
Address: COMMISSIONER FOR PATENTS
P.O. Box 1450
Alexandria, Virginia 22313-1450
www.uspto.gov

WILSON & HAM
1811 Santa Rita Road
Suite 130
Pleasanton, CA 94566

Mail Date: 08/31/2010

| | | |
|---|---|---|
| **Applicant** | : Ravi Josyula | : DECISION ON REQUEST FOR |
| **Patent Number** | : 7653718 | : RECALCULATION of PATENT |
| **Issue Date** | : 01/26/2010 | : TERM ADJUSTMENT IN VIEW |
| **Application No** | : 10/443,577 | : OF WYETH AND NOTICE OF INTENT TO |
| **Filed** | : 05/22/2003 | : ISSUE CERTIFICATE OF CORRECTION |
| | | : |

The Request for Recalculation is **GRANTED** to the extent indicated.

The patent term adjustment has been determined to be **2014** days. The USPTO will *sua sponte* issue a certificate of correction reflecting the amount of PTA days determined by the recalculation.

Prior to the issuance of the certificate of correction, the USPTO will afford patentee an opportunity to be heard and request reconsideration. Accordingly, patentee has **one month or thirty (30) days**, whichever is longer, to file a request for reconsideration of this patent term adjustment calculation. See 35 U.S.C. 154(b)(3)(B)(ii) and 37 CFR 1.322(a)(4). No extensions of time will be granted under 37 CFR 1.136.

Patentee should use document code PET.OP if electronically filing a request for reconsideration of this patent term adjustment calculation. The patentee must also include the information required by 37 CFR 1.705(b)(2) and the fee required by 37 CFR 1.18(e). If patentee does not file a timely request for reconsideration of this patent term adjustment calculation including the information required by 37 CFR 1.705(b)(2) and the fee required by 37 CFR 1.18(e), the USPTO will issue a certificate of correction reflecting the PTA determination noted above.

Patentee should be aware that in order to preserve the right to review in the United States District Court for the District of Columbia of the USPTO patent term adjustment determination, patentee must ensure that he or she also take the steps required under 35 U.S.C. 154(b)(4)(A) in a timely manner. Nothing in the request for recalculation should be construed as providing an alternative time frame for commencing a civil action under 35 U.S.C. 154(b)(4)(A).

Any questions concerning this decision should be directed to the Office of Patent Legal Administration at 571-272-7702.

UNITED STATES PATENT AND TRADEMARK OFFICE

Commissioner for Patents
United States Patent and Trademark Office
P.O. Box 1450
Alexandria, VA 22313-1450
www.uspto.gov

**ALLERGAN, INC.**
**2525 DUPONT DRIVE, T2-7H**
**IRVINE CA 92612-1599**

MAILED
FEB 28 2012
OFFICE OF PETITIONS

| | | |
|---|---|---|
| In re Application of | : | |
| Kei Roger Aoki et al. | : | |
| Application No. 10/443,593 | : | DECISION ON PETITION |
| Filed: May 21, 2003 | : | |
| Attorney Docket No. 16952CON1CIP1 (BOT) | : | |

This is a decision on the Petition to Expunge, filed December 21, 2011, which is being treated as a petition under 37 CFR 1.59(b) to expunge information from the above identified application.

The petition is **dismissed**.

Petitioner requests that the Request for Continued Examination (RCE), filed December 20, 2011, be expunged from the record. Petitioner requests that the RCE be expunged as it was filed unintentionally.

The petition fee has been charged to petitioner's deposit account as authorized.

Petitioner characterizes the RCE as filed unintentionally. Expungement of papers filed unintentionally is discussed in MPEP 724.05(II). However, the RCE is clearly identified as being intended for the instant application and appears to be a response to the final Office action mailed July 14, 2011. As such the RCE was, at the time of filing, was intentionally filed and cannot be expunged under 37 CFR 1.59.

Telephone inquiries concerning this communication should be directed to Carl Friedman at (571) 272-6842.

Carl Friedman
Petitions Examiner
Office of Petitions

UNITED STATES PATENT AND TRADEMARK OFFICE

Commissioner for Patents
United States Patent and Trademark Office
P.O. Box 1450
Alexandria, VA 22313-1450
www.uspto.gov

DAVID W. HIGHET, VP & CHIEF IP COUNSEL
BECTON, DICKINSON AND COMPANY
(VENABLE LLP)
1 BECTON DRIVE, MC 110
FRANKLIN LAKES NJ 07417-1880

MAILED
JAN 25 2011
OFFICE OF PETITIONS

| | | |
|---|---|---|
| In re Application of | : | |
| Down et al. | : | DECISION ON PETITION TO |
| Application Number: 10/443822 | : | WITHDRAW HOLDING OF |
| Filing Date: 05/23/2003 | : | ABANDONMENT |
| Attorney Docket Number: P-4796D1 | : | |

This is a decision on the petition filed on October 3, 2003, to withdraw the holding of abandonment in the above-identified application.

The Office apologizes for the delay in responding to the present petition and regrets any inconvenience to petitioners.

The petition is **GRANTED**.

The application was held abandoned for failure to timely submit a response to the Office action requiring restriction and/or election mailed on August 26, 2003, which set a one (1)-month shortened period for reply. No reply having been received, Notice of Abandonment was mailed on March 23, 2004. On October 3, 2003, the petition was filed. A duplicate copy of the petition was provided on June 1, 2005.

Petitioners aver that a reply was timely filed by facsimile on September 16, 2003. In support, petitioners have submitted a copy of the three (3) pages comprising the reply allegedly timely filed. The reply contains a certificate of facsimile

transmission dated September 16, 2003, signed by Lorraine Kowalchuk. Petitioners have also provided a copy of the USPTO's Auto-Reply Facsimile Transmission report, showing that three (3) pages, including the cover page of the reply, were received by the USPTO on September 16, 2003.

37 CFR 1.8(b) states that in the event that correspondence is considered timely filed by being mailed or transmitted in accordance with paragraph (a) of this section, but not received in the U.S. Patent and Trademark Office after a reasonable amount of time has elapsed from the time of mailing or transmitting of the correspondence, or after the application is held to be abandoned, the correspondence will be considered timely if the party who forwarded such correspondence:

> (1) Informs the Office of the previous mailing or transmission of the correspondence promptly after becoming aware that the Office has no evidence of receipt of the correspondence;
>
> (2) Supplies an additional copy of the previously mailed or transmitted correspondence and certificate; and
>
> (3) Includes a statement that attests on a personal knowledge basis or to the satisfaction of the Director to the previous timely mailing, transmission or submission. If the correspondence was sent by facsimile transmission, a copy of the sending unit's report confirming transmission may be used to support this statement. If the correspondence was transmitted via the Office electronic filing system, a copy of an acknowledgment receipt generated by the Office electronic filing system confirming submission may be used to support this statement.

In view of the evidence provided (*e.g.*, the certificate of mailing and the Auto-Reply Facsimile Transmission report), the showing of record is that the reply was timely filed.

The holding of abandonment is **withdrawn**, and the notice of abandonment is **vacated**.

The application is being referred to Technology Center Art Unit 3742 for further processing.

Telephone inquiries concerning this matter may be directed to the undersigned at (571)272-3231.

Douglas I. Wood
Senior Petitions Attorney
Office of Petitions

UNITED STATES PATENT AND TRADEMARK OFFICE

UNITED STATES DEPARTMENT OF COMMERCE
United States Patent and Trademark Office
Address: COMMISSIONER FOR PATENTS
P.O. Box 1450
Alexandria, Virginia 22313-1450
www.uspto.gov

| APPLICATION NO. | FILING DATE | FIRST NAMED INVENTOR | ATTORNEY DOCKET NO. | CONFIRMATION NO. |
|---|---|---|---|---|
| 10/444,145 | 05/23/2003 | David J. Bova | SD-50003USC5 | 6988 |

23492 7590 10/15/2010
PAUL D. YASGER
ABBOTT LABORATORIES
100 ABBOTT PARK ROAD
DEPT. 377/AP6A
ABBOTT PARK, IL 60064-6008

| EXAMINER |
|---|
| SCHLIENTZ, NATHAN W |

| ART UNIT | PAPER NUMBER |
|---|---|
| 1616 | |

| NOTIFICATION DATE | DELIVERY MODE |
|---|---|
| 10/15/2010 | ELECTRONIC |

**Please find below and/or attached an Office communication concerning this application or proceeding.**

The time period for reply, if any, is set in the attached communication.

Notice of the Office communication was sent electronically on above-indicated "Notification Date" to the following e-mail address(es):

Patents_Abbott_Park@abbott.com

UNITED STATES PATENT AND TRADEMARK OFFICE

Commissioner for Patents
United States Patent and Trademark Office
P.O. Box 1450
Alexandria, VA 22313-1450
www.uspto.gov

PAUL D. YASGER
ABBOTT LABORATORIES
100 ABBOTT PARK ROAD
DEPT. 377/AP6A
ABBOTT PARK IL 60064-6008

OCT 1 5 2010

In re Application of:
David J. Bova
Serial No.: 10/444,145
Filed: May 23, 2003
Attorney Docket No.: **SD-50003USC5**

: PETITION DECISION

This is in response to the petition under 37 CFR § 1.59(b), filed September 29, 2010, to expunge information from the above identified application. This application is allowed.

Petitioner requests that the documents submitted in an IDS filed September 29, 2010 and subject to a protective order be expunged from the record. Petitioner states either: (A) that the information contains trade secret material, proprietary material and/or material that is subject to a protective order which has not been made public; or (B) that the information submitted was unintentionally submitted and the failure to obtain its return would cause irreparable harm to the party who submitted the information or to the party in interest on whose behalf the information was submitted, and the information has not otherwise been made public. The petition fee set forth in 37 CFR § 1.17(g) has been paid.

The reasons set forth in this petition establishes to the satisfaction of the Director that expungement of the information is appropriate. The file entries for the documents have been closed and as such the documents are no longer publicly available, which is the IFW equivalent to removal of a paper document from a paper file wrapper.

Therefore, petitioner's petition is GRANTED.

Should there be any questions about this decision please contact Marianne C. Seidel by letter addressed to Director, TC 1600, at the address listed above, or by telephone at 571-272-0584 or by facsimile sent to the general Office facsimile number, 571-273-8300.

Marianne C. Seidel
Quality Assurance Specialist
Technology Center 1600

UNITED STATES PATENT AND TRADEMARK OFFICE

UNITED STATES DEPARTMENT OF COMMERCE
United States Patent and Trademark Office
Address: COMMISSIONER FOR PATENTS
P.O. Box 1450
Alexandria, Virginia 22313-1450
www.uspto.gov

| APPLICATION NO. | FILING DATE | FIRST NAMED INVENTOR | ATTORNEY DOCKET NO. | CONFIRMATION NO. |
|---|---|---|---|---|
| 10/444,145 | 05/23/2003 | David J. Bova | SD-50003USC5 | 6988 |

23492 7590 11/30/2010
PAUL D. YASGER
ABBOTT LABORATORIES
100 ABBOTT PARK ROAD
DEPT. 377/AP6A
ABBOTT PARK, IL 60064-6008

| EXAMINER |
|---|
| SCHLIENTZ, NATHAN W |

| ART UNIT | PAPER NUMBER |
|---|---|
| 1616 | |

| NOTIFICATION DATE | DELIVERY MODE |
|---|---|
| 11/30/2010 | ELECTRONIC |

**Please find below and/or attached an Office communication concerning this application or proceeding.**

The time period for reply, if any, is set in the attached communication.

Notice of the Office communication was sent electronically on above-indicated "Notification Date" to the following e-mail address(es):

Patents_Abbott_Park@abbott.com

UNITED STATES PATENT AND TRADEMARK OFFICE

Commissioner for Patents
United States Patent and Trademark Office
P.O. Box 1450
Alexandria, VA 22313-1450
www.uspto.gov

NOV 30 2010

PAUL D. YASGER
ABBOTT LABORATORIES
100 ABBOTT PARK ROAD
DEPT. 377/AP6A
ABBOTT PARK IL 60064-6008

In re Application of:
David J. Bova
Serial No.: 10/444,145
Filed: May 23, 2003
Attorney Docket No.: **SD-50003USC5**

: PETITION DECISION

Upon further consideration, the earlier decision granting of the petition under 37 CFR § 1.59(b), filed September 29, 2010, to expunge information from the above identified application is being vacated.

The documents petitioner requested to be expunged in an IDS filed September 29, 2010 and subject to a protective order have not yet been reviewed by the examiner, and thus the decision was premature.

Therefore, the decision mailed October 15, 2010 is VACATED.

A decision on the September 29, 2010 petition will be issued in due course but is currently DISMISSED.

Should there be any questions about this decision please contact Marianne C. Seidel by letter addressed to Director, TC 1600, at the address listed above, or by telephone at 571-272-0584 or by facsimile sent to the general Office facsimile number, 571-273-8300.

Marianne C. Seidel
Quality Assurance Specialist
Technology Center 1600

UNITED STATES PATENT AND TRADEMARK OFFICE

UNITED STATES DEPARTMENT OF COMMERCE
United States Patent and Trademark Office
Address: COMMISSIONER FOR PATENTS
P.O. Box 1450
Alexandria, Virginia 22313-1450
www.uspto.gov

| APPLICATION NO. | FILING DATE | FIRST NAMED INVENTOR | ATTORNEY DOCKET NO. | CONFIRMATION NO. |
|---|---|---|---|---|
| 10/444,145 | 05/23/2003 | David J. Bova | SD-50003USC5 | 6988 |

23492 7590 03/16/2011
PAUL D. YASGER
ABBOTT LABORATORIES
100 ABBOTT PARK ROAD
DEPT. 377/AP6A
ABBOTT PARK, IL 60064-6008

| EXAMINER |
|---|
| SCHLIENTZ, NATHAN W |

| ART UNIT | PAPER NUMBER |
|---|---|
| 1616 | |

| NOTIFICATION DATE | DELIVERY MODE |
|---|---|
| 03/16/2011 | ELECTRONIC |

**Please find below and/or attached an Office communication concerning this application or proceeding.**

The time period for reply, if any, is set in the attached communication.

Notice of the Office communication was sent electronically on above-indicated "Notification Date" to the following e-mail address(es):

Patents_Abbott_Park@abbott.com

UNITED STATES PATENT AND TRADEMARK OFFICE

Commissioner for Patents
United States Patent and Trademark Office
P.O. Box 1450
Alexandria, VA 22313-1450
www.uspto.gov

MAR 1 6 2011

PAUL D. YASGER
ABBOTT LABORATORIES
100 ABBOTT PARK ROAD
DEPT. 377/AP6A
ABBOTT PARK IL 60064-6008

In re Application of:
David J. Bova
Serial No.: 10/444,145
Filed: May 23, 2003
Attorney Docket No.: **SD-50003USC5**

PETITION DECISION

This is in response to the petition under 37 CFR § 1.59(b), filed January 2, 2011, to expunge information from the above identified application. This application has not been allowed.

Petitioner requests that the documents 1-44 filed on September 21, 2010; September 22, 2010; and September 28, 2010 indicated as being subject to a protective order be closed or expunged from the record of the above-identified application and be replaced with documents 1-44 being filed concurrently herewith. Petitioner states either: (A) that the information contains trade secret material, proprietary material and/or material that is subject to a protective order which has not been made public; or (B) that the information submitted was unintentionally submitted and the failure to obtain its return would cause irreparable harm to the party who submitted the information or to the party in interest on whose behalf the information was submitted, and the information has not otherwise been made public. The petition fee set forth in 37 CFR § 1.17(g) has been paid.

This is an examined application wherein an RCE has been filed. As such the information provided has not been reviewed nor have proceedings in the application been terminated. As stated in M.P.E.P. 724, upon allowance or other action closing prosecution in an application, petition may be made for return of Proprietary information. The information cannot be expunged at this time.

The petition is **DISMISSED**. Petitioner may resubmit the petition subsequent to a Notice of Allowability or *ex parte Quayle* action being mailed in the application. No additional petition fee will be required at that time.

Should there be any questions about this decision please contact Marianne C. Seidel by letter addressed to Director, TC 1600, at the address listed above, or by telephone at 571-272-0584 or by facsimile sent to the general Office facsimile number, 571-273-8300.

/MC Seidel/
Marianne C. Seidel, Quality Assurance Specialist
Technology Center 1600

UNITED STATES PATENT AND TRADEMARK OFFICE

**UNITED STATES DEPARTMENT OF COMMERCE**
**United States Patent and Trademark Office**
Address: COMMISSIONER FOR PATENTS
P.O. Box 1450
Alexandria, Virginia 22313-1450
www.uspto.gov

| APPLICATION NO. | FILING DATE | FIRST NAMED INVENTOR | ATTORNEY DOCKET NO. | CONFIRMATION NO. |
|---|---|---|---|---|
| 10/444,145 | 05/23/2003 | David J. Bova | SD-50003USC5 | 6988 |

89399 7590 03/22/2011
Lisa V. Mueller
Polsinelli Shughart PC
161 N. Clark Street
Suite 4200
Chicago, IL 60601

| EXAMINER |
|---|
| SCHLIENTZ, NATHAN W |

| ART UNIT | PAPER NUMBER |
|---|---|
| 1616 | |

| NOTIFICATION DATE | DELIVERY MODE |
|---|---|
| 03/22/2011 | ELECTRONIC |

**Please find below and/or attached an Office communication concerning this application or proceeding.**

The time period for reply, if any, is set in the attached communication.

Notice of the Office communication was sent electronically on above-indicated "Notification Date" to the following e-mail address(es):

card@polsinelli.com
bpeters@polsinelli.com

UNITED STATES PATENT AND TRADEMARK OFFICE

Commissioner for Patents
United States Patent and Trademark Office
P.O. Box 1450
Alexandria, VA 22313-1450
www.uspto.gov

Lisa V. Mueller
Polsinelli Shughart PC
161 N. Clark Street
Suite 4200
Chicago, Illinois 600601

| | | |
|---|---|---|
| In re Application of David J. Bova | : | **DECISION EXPUNGING** |
| Application No. 10/444,145 | : | **SEPTEMBER 2010 INFORMATION** |
| Filed: May 23, 2003 | : | **DISCLOSURE STATEMENTS AND** |
| For: Nicotinic Acid Compositions For Treating | : | **PROVISIONALLY SEALING** |
| Hyperlipidemia and Related Methods Therefor | : | **JANUARY 7, 2011 IDS** |

This is a supplemental decision on the petition filed on January 7, 2011 entitled "Petition to Close/Expunge Certain Filed Documents and Replace with the Same Documents Being Filed Concurrently Herewith under 37 CFR Section 1.182" (the "Petition") and the "Petition to Expunge Information under 37 C.F.R. 1.59" filed September 29, 2010.

The January 7, 2011 petition to replace documents is **dismissed**. The Information Disclosure Documents filed January 7, 2011, is hereby **provisionally sealed** for a period of THIRTY (30) DAYS to provide applicant the opportunity to provide support for its contention that the documents submitted are no longer required to be maintained in confidence. The Information Disclosure Documents filed September 21st, 22nd, and 29th, 2010 are being expunged from the record.

The September 29, 2010 petition under 37 CFR 1.59 is **dismissed**.

## RELEVANT BACKGROUND

1. Application number 10/444,145 ("the '145 application")[1] was filed May 23, 2003 as a continuation of application number 09/478,325, which is in turn a continuation of application number 08/814,974 ("the '974 application"), which issued as U.S. Patent No. 6,129,930 (the '930 patent"), which in turn is a continuation in part of application number 08/368,378 ("the '378 application"), which issued as U.S. Patent No. 6,080,428 (the '428 patent").

2. U.S. Patent Nos. 6,080,428 and 6,129,930 are assigned to Abbot Laboratories, and are the subject of litigation styled *Abbott Laboratories v. Teva Pharmaceuticals, Inc.* Civil Action No. 1:10-CV-00057 (D. Del).[2] On September 23, 2010, a protective order was issued in the

[1] The '145 application was published on June 2, 2005 as United States Patent Application Publication 2005/0118257A1 and is thus available to any member of the public for viewing.
[2] This docket consolidates multiple actions into a single proceeding.

litigation with respect to materials provided by each of the parties in the course of discovery.

3. On September 21, 22, and 29, 2010, applicant in the '145 application filed three Information Disclosure Statements (IDSs) under seal (in accordance with the procedure outlined in MPEP 724) which contain documents that are marked as being subject to a Protective Order that was issued in the above styled litigation on September 23, 2010.

4. On September 29 2010, applicant filed a petition under 37 C.F.R. 1.59 to expunge the documents if the examiner determines that the materials contained in the IDS filed on that date are not material to patentability.

5. On January 7, 2011, applicant filed papers including, *inter alia,* the petition which is the subject of this decision.

6. On March 16, 2011, the Technology Center mailed a decision dismissing the petition as premature.

## I. Pertinent Regulations

**37 CFR § 1.182 Questions not specifically provided for.**

All situations not specifically provided for in the regulations of this part will be decided in accordance with the merits of each situation by or under the authority of the Director, subject to such other requirements as may be imposed, and such decision will be communicated to the interested parties in writing. Any petition seeking a decision under this section must be accompanied by the petition fee set forth in **§ 1.17(f)**.

## DECISION

On September 21, 22, and 29, 2010, applicant filed a total of 41 documents under seal as part of information disclosure statements accompanied by a statement that these documents were subject to a protective order of the district court in an ongoing litigation.

The U.S. Patent & Trademark Office (the Office) will not accept information that has been designated by a court as confidential or subject to a protective order, or is a third party's confidential information, absent express permission from the court or third party that the information may be submitted to the Office and may become part of the file open to the public. Although provisions are provided for expunging confidential information by petition, as noted in MPEP § 724.04(c), if any portion or all of the submitted information is found to be material to patentability, the petition to expunge will be denied and the information will thereafter become a permanent part of the reexamination file and open to the public. The Office will not accept confidential information known by the Office to be covered by a protective order of a federal court that may be later opened to the public without permission from the court. Acceptance, review and release of such material by the USPTO would be inconsistent with the power of the federal court protective order.

Accordingly, applicant's representative was informed that in order to have any documents considered by the Examiner, a showing would have to be made that either the document was not subject to the protective order or that the owner of the document had consented to the submission which consent would place the document outside of the court's protective order.

1. Applicant's Petition to Replace and Expunge the September 21, 22, and 29, 2010 IDS

On January 7, 2010, applicant re-submitted all of the documents previously submitted in the information disclosures of September 21, 22, and 29, 2010 and accompanied the submission with a petition to replace and expunge the September 2010 IDS papers. Petitioner requests that to facilitate compliance with the protective order in the related litigation, that these documents be accepted as a replacement for the September 21, 22, and 29, 2010 papers and that the IDS of the same dates be expunged from the record.

a. The September 21, 22, and 29, 2010 IDS are expunged as not being entitled to entry.

In accordance with the position of the Office not to accept confidential information that may be later opened to the public without permission from a court or the owner of that information, the September 21, 22, and 29, 2010 papers and that the IDS of the same dates are being expunged from the record. [3] Applicant may make arrangements (with the Examiner of record or Mr. Laufer) to retrieve the September 22, and September 29, 2010 submissions within thirty (30) days of the mail date of this decision, or the documents will be destroyed. The Patent Office cannot ensure that the confidentiality will be safeguarded during destruction.

b. Entry of the January 7, 2011 Replacement IDS

The petition clarifies that although the documents were originally identified as subject to the protective order, the submitted documents had actually been redacted to remove any confidential and/or proprietary information. Consistent with the protective order, applicant contacted the relevant parties to inform them of the intention to submit the aforementioned documents, thus affording the parties 10 business days to object to the submission, and that none of the defendants objected.

Under the facts and circumstances of this proceeding, where the documents were previously indicated to be subject to the protective order, the showing is not adequate to establish that applicant is within its rights to submit the subject information to the Office or that review by the examiner and release to the public of any of the document would not violate the protective order.

Petitioner has not provided any evidence to support its contentions regarding the conditions imposed by the protective order and the communications that would establish the waiver of confidentiality on the part of the defendants. Accordingly, the Office has provisionally sealed

[3] The September 21, 2010 IDS was scanned into the IFW and the expungement from the record will be effected by will be expunged from the record by marking them as "closed" in the IFW and making them unavailable to the public

the subject documents submitted January 7, 2011, by marking those documents as "non-public." Applicant is given THIRTY (30) DAYS from the date of mailing of the present decision to provide supporting evidence establishing the right for the examiner to review and for the Office to make public each of the documents submitted on January 7, 2011.

If no response by patent owner is received to the present Decision within THIRTY (30) DAYS from the mailing or issuance of the present Decision, the Office will expunge the January 7, 2011 submission by closing them in the IFW record. In that eventuality, prosecution on the merits will take place without any consideration of those documents by the examiner.

The petition to accept the January 7, 2010 submission as a replacement of the September 21, 22, and 29, 2010 IDS is **dismissed.**

2. Applicant's September 29, 2010 Petition to Expunge the September 29, 2010 IDS

The decision rendered in the previous section returned the September 29, 2010 IDS prior to review by the examiner , such that it is not part of the record of this application. In light of that decision, the examiner will not be reviewing that specific submission. Accordingly, the petition under 37 CFR 1.59, requesting expungement if the examiner determines that any document is not material to patentability is dismissed.

## CONCLUSION

1. The petition to replace the September 21, 22, and 29, 2010 Information Disclosure Statements with the January 7, 2011 statement is dismissed.

1. The Office has provisionally sealed the Information Disclosure Documents filed January 7, 2011, by marking those documents as "non-public." THIRTY (30) DAYS from the date of mailing or issuance of the present Order, the Office intends to expunge the provisionally sealed documents, unless applicant makes a *bona fide* effort to comply with this Order and files paperwork consistent with the direction set out above.

2. The Information Disclosure Documents filed September 21st, 22nd, and 29th, 2010 are being expunged from the record. Applicant must retain a copy of the materials of the replaced Information Disclosure Statements for the enforceable life of the patent.

2. The petition under 37 CFR 1.59 to expunge the September 29, 2010 Information Disclosure Statements is dismissed.

3. **Telephone inquiries related to this decision may be directed to Pinchus M. Laufer, Legal Advisor, at (571) 272-7726, or in his absence, to the undersigned at (571) 272-7735.**

Robert A. Clarke, Deputy Director
Office of Patent Legal Administration

UNITED STATES PATENT AND TRADEMARK OFFICE

UNITED STATES DEPARTMENT OF COMMERCE
United States Patent and Trademark Office
Address: COMMISSIONER FOR PATENTS
P.O. Box 1450
Alexandria, Virginia 22313-1450
www.uspto.gov

| APPLICATION NO. | FILING DATE | FIRST NAMED INVENTOR | ATTORNEY DOCKET NO. | CONFIRMATION NO. |
|---|---|---|---|---|
| 10/444,145 | 05/23/2003 | David J. Bova | SD-50003USC5 | 6988 |

89399 7590 05/12/2011
Lisa V. Mueller
Polsinelli Shughart PC
161 N. Clark Street
Suite 4200
Chicago, IL 60601

| EXAMINER |
|---|
| SCHLIENTZ, NATHAN W |

| ART UNIT | PAPER NUMBER |
|---|---|
| 1616 | |

| NOTIFICATION DATE | DELIVERY MODE |
|---|---|
| 05/12/2011 | ELECTRONIC |

**Please find below and/or attached an Office communication concerning this application or proceeding.**

The time period for reply, if any, is set in the attached communication.

Notice of the Office communication was sent electronically on above-indicated "Notification Date" to the following e-mail address(es):

card@polsinelli.com
bpeters@polsinelli.com

UNITED STATES PATENT AND TRADEMARK OFFICE

Commissioner for Patents
United States Patent and Trademark Office
P.O. Box 1450
Alexandria, VA 22313-1450
www.uspto.gov

Lisa V. Mueller
Polsinelli Shughart PC
161 N. Clark Street
Suite 4200
Chicago, Illinois 600601

| | | |
|---|---|---|
| In re Application of David J. Bova | : | **DECISION ACCEPTING** |
| Application No. 10/444,145 | : | **AND UNSEALING** |
| Filed: May 23, 2003 | : | **JANUARY 7, 2011** |
| For: Nicotinic Acid Compositions For Treating | : | **INFORMATION DISCLOSURE** |
| Hyperlipidemia and Related Methods Therefor | : | **STATEMENT** |

This is a decision in response to the paper entitled "Response to Decision Expunging September 2010 Information Disclosure Statements and Provisionally Sealing January 7, 2011 IDS" submitted April 18, 2011.

In light of this submission, the January 7, 2011 petition to replace documents is **granted**. The provisionally seal of the Information Disclosure Documents filed January 7, 2011, is lifted and the documents are hereby entered into the file for consideration by the examiner.

## RELEVANT BACKGROUND

1. Application number 10/444,145 ("the '145 application")[1] was filed May 23, 2003 as a continuation of application number 09/478,325, which is in turn a continuation of application number 08/814,974 ("the '974 application"), which issued as U.S. Patent No. 6,129,930 (the '930 patent"), which in turn is a continuation in part of application number 08/368,378 ("the '378 application"), which issued as U.S. Patent No. 6,080,428 (the '428 patent").

2. U.S. Patent Nos. 6,080,428 and 6,129,930 are assigned to Abbot Laboratories, and are the subject of litigation styled *Abbott Laboratories v. Teva Pharmaceuticals, Inc.* Civil Action No. 1:10-CV-00057 (D. Del).[2] On September 23, 2010, a protective order was issued in the litigation with respect to materials provided by each of the parties in the course of discovery.

3. On September 21, 22, and 29, 2010, applicant in the '145 application filed three Information Disclosure Statements (IDSs) under seal (in accordance with the procedure outlined in

[1] The '145 application was published on June 2, 2005 as United States Patent Application Publication 2005/0118257A1 and is thus available to any member of the public for viewing.
[2] This docket consolidates multiple actions into a single proceeding.

MPEP 724) which contain documents that are marked as being subject to a Protective Order that was issued in the above styled litigation on September 23, 2010.

4. On September 29 2010, applicant filed a petition under 37 C.F.R. 1.59 to expunge the documents if the examiner determines that the materials contained in the IDS filed on that date are not material to patentability.

5. On January 7, 2011, applicant filed a petition to replace the September 2010 IDSs with an accompanying Information Disclosure Submission

6. On March 16, 2011, the Technology Center mailed a decision dismissing the petition as premature.

7. On March 22, 2011, the OPLA issued a supplemental decision dismissing the January 7 petition and provisionally sealing the accompanying IDS.

8. On April 18, 2011 applicant filed a paper in response to the supplemental decision of March 22, 2011.

## I. Pertinent Regulations

**37 CFR § 1.182 Questions not specifically provided for.**

All situations not specifically provided for in the regulations of this part will be decided in accordance with the merits of each situation by or under the authority of the Director, subject to such other requirements as may be imposed, and such decision will be communicated to the interested parties in writing. Any petition seeking a decision under this section must be accompanied by the petition fee set forth in **§ 1.17**(f).

## DECISION

In a supplemental decision issued March 22, 2011 dismissing the January 7, 2011 petition for entry of a concurrently submitted IDS, the Office provisionally sealed the accompanying IDS and set a 30 day period for applicant to provide supporting evidence establishing the right for the examiner to review and for the Office to make public each of the documents submitted on January 7, 2011.

The response filed April 18, 2011 provides the requested showing. Accordingly, the provisional seal is being lifted by marking the documents as publicly available in the Image File Wrapper system and the documents are being entered into the record of the application file.

The petition to accept the January 7, 2011 IDS submission is **granted.**

## CONCLUSION

1. The Office has lifted the seal the Information Disclosure Documents filed January 7, 2011, by marking those documents as "public".

2. The Information Disclosure Documents filed January 7, 2011 are being entered into the file, will be available to the public, and will be considered by the Examiner to the extent that they conform with the requirements of such statements as set out in 37 CFR 1.98.

3. Telephone inquiries related to this decision may be directed to Pinchus M. Laufer, Legal Advisor, at (571) 272-7726, or in his absence, to the undersigned at (571) 272-7735.

Robert A. Clarke

Robert A. Clarke, Acting Deputy Director
Office of Patent Legal Administration

May 11, 2011

UNITED STATES PATENT AND TRADEMARK OFFICE

UNITED STATES DEPARTMENT OF COMMERCE
United States Patent and Trademark Office
Address: COMMISSIONER FOR PATENTS
P.O. Box 1450
Alexandria, Virginia 22313-1450
www.uspto.gov

| APPLICATION NO. | FILING DATE | FIRST NAMED INVENTOR | ATTORNEY DOCKET NO. | CONFIRMATION NO. |
|---|---|---|---|---|
| 10/444,145 | 05/23/2003 | David J. Bova | SD-50003USC5 | 6988 |

89399 7590 07/06/2011
Lisa V. Mueller
Polsinelli Shughart PC
161 N. Clark Street
Suite 4200
Chicago, IL 60601

| EXAMINER |
|---|
| SCHLIENTZ, NATHAN W |

| ART UNIT | PAPER NUMBER |
|---|---|
| 1616 | |

| NOTIFICATION DATE | DELIVERY MODE |
|---|---|
| 07/06/2011 | ELECTRONIC |

**Please find below and/or attached an Office communication concerning this application or proceeding.**

The time period for reply, if any, is set in the attached communication.

Notice of the Office communication was sent electronically on above-indicated "Notification Date" to the following e-mail address(es):

card@polsinelli.com
bpeters@polsinelli.com

UNITED STATES PATENT AND TRADEMARK OFFICE

JUL - 6 2011

Commissioner for Patents
United States Patent and Trademark Office
P.O. Box 1450
Alexandria, VA 22313-1450
www.uspto.gov

PAUL D. YASGER
ABBOTT LABORATORIES
100 ABBOTT PARK ROAD
DEPT. 377/AP6A
ABBOTT PARK IL 60064-6008

In re Application of:
David J. Bova
Serial No.: 10/444,145
Filed: May 23, 2003
Attorney Docket No.: **SD-50003USC5**

: PETITION DECISION

This is in response to the petition under 37 CFR § 1.59(b), filed July 1, 2011, to expunge information from the above identified application. This application is allowed.

Petitioner requests that the documents submitted in an IDS filed September 26, 2006 and subject to a protective order be expunged from the record. Petitioner states either: (A) that the information contains trade secret material, proprietary material and/or material that is subject to a protective order which has not been made public; or (B) that the information submitted was unintentionally submitted and the failure to obtain its return would cause irreparable harm to the party who submitted the information or to the party in interest on whose behalf the information was submitted, and the information has not otherwise been made public. The petition fee set forth in 37 CFR § 1.17(g) has been paid.

The reasons set forth in this petition establishes to the satisfaction of the Director that expungement of the information is appropriate. The file entries for the documents have been closed and as such the documents are no longer publicly available, which is the IFW equivalent to removal of a paper document from a paper file wrapper.

Therefore, petitioner's petition is GRANTED.

Should there be any questions about this decision please contact Marianne C. Seidel by letter addressed to Director, TC 1600, at the address listed above, or by telephone at 571-272-0584 or by facsimile sent to the general Office facsimile number, 571-273-8300.

/MC Seidel/
Marianne C. Seidel, Quality Assurance Specialist
Technology Center 1600

UNITED STATES PATENT AND TRADEMARK OFFICE

Commissioner for Patents
United States Patent and Trademark Office
P.O. Box 1450
Alexandria, VA 22313-1450
www.uspto.go

MAILED
FEB 13 2012
OFFICE OF PETITIONS

ROBERT A. SKRIVANEK, JR.
LOWRIE LANDO & ANASTASI LLP
RIVERFRONT OFFICE PARK
ONE MAIN STREET ELEVENTH FLOOR
CAMBRIDGE MA 02142

In re Patent No. 7,243,035 :
Issue Date: July 10, 2007 :
Application No. 10/444,249 : ON PETITION
Filed: May 23, 2003 :
Attorney Docket No. MYKR1370-1 :

This is a decision on the petition under 37 CFR 1.378(c), filed December 2, 2011, to accept the unintentionally delayed payment of a maintenance fee for the above-identified patent.

The petition is **GRANTED**.

This patent expired on July 11, 2011 for failure to pay the first maintenance fee. Since this petition was submitted within twenty-four months after the six-month grace period provided in 37 CFR 1.362(e), the petition was timely filed under the provisions of 37 CFR 1.378(c).

The maintenance fee is hereby accepted and the above-identified patent is reinstated as of the mail date of this decision.

It is not apparent whether the person signing the statement of unintentional delay was in a position to have firsthand or direct knowledge of the facts and circumstances of the delay at issue. Nevertheless, such statement is being treated as having been made as the result of a reasonable inquiry into the facts and circumstances of such delay. In the event that such an inquiry has not been made, petitioner must make such an inquiry. If such inquiry results in the discovery that the delay in paying the maintenance fee under 37 CFR 1.378(c) was intentional, petitioner must notify the Office.

Further, there is no indication that the person signing the petition was ever given a power of attorney to prosecute the application. If the person signing the petition desires to receive future correspondence regarding this patent application, the appropriate power of attorney documents must be submitted. While a courtesy copy of this decision is being mailed to the person signing the petition, all future correspondence will be directed to the address currently of record until appropriate instructions are received.

Telephone inquiries concerning this decision should be directed to the undersigned at (571) 272-3208.

/KOC/
Karen Creasy
Petitions Examiner
Office of Petitions

Cc:

**NAM H. HUYNN**
**PATTON BOGGS LLP**
**2000 MCKINNEY AVE., SUITE 1700**
**DALLAS, TX 75201**

## SPE RESPONSE FOR CERTIFICATE OF CORRECTION

**Paper No.:** _____

**DATE** : 09-07-2010

**TO SPE OF** : ART UNIT 3693 10/444,324

**SUBJECT** : Request for Certificate of Correction for Appl. No: ~~10/444051~~ Patent No 7685051

Please respond to this request for a certificate of correction within 7 days.

**FOR IFW FILES:**

Please review the requested changes/corrections as shown in the **COCIN** document(s) in the IFW application image. No new matter should be introduced, nor should the scope or meaning of the claims be changed.

Please complete the response (see below) and forward the completed response to scanning using document code **COCX**.

**FOR PAPER FILES:**

Please review the requested changes/corrections as shown in the attached certificate of correction. Please complete this form (see below) and forward it with the file to:

**Certificates of Correction Branch (Co f C)**
**Randolph Square – 9D10-A**
**Palm Location 7580**

**Should drawings be entered?**

EvaJames
**Certificates of Correction Branch**
**703-756-1583**

**Thank You For Your Assistance**

**The request for issuing the above-identified correction(s) is hereby:**
Note your decision on the appropriate box.

| | |
|---|---|
| **xApproved** | **All** changes apply. |
| ❑ **Approved in Part** | Specify below which changes **do not** apply. |
| ❑ **Denied** | State the reasons for denial below. |

/James Kramer/ 3693
**SPE** **Art Unit**

UNITED STATES PATENT AND TRADEMARK OFFICE

Commissioner for Patents
United States Patent and Trademark Office
P.O. Box 1450
Alexandria, VA 22313-1450
www.uspto.gov

**KRISTIN M. JOSLYN,**
**HALE AND DORR LLP**
**300 PARK AVENUE**
**NEW YORK NY 10022**

**MAILED**

JUN 02 2011

**OFFICE OF PETITIONS**

| | | |
|---|---|---|
| In re Patent No. 6,929,736 | : | |
| Issued: August 16, 2005 | : | |
| Application No. 10/444,629 | : | NOTICE |
| Filed: May 23, 2003 | : | |
| Attorney Docket No. 113222.129 US4 | : | |

This is in response to the paper filed March 31, 2011 under 37 CFR 1.28(g)(2) requesting that status as a Small Entity be removed.

In accordance with the March 31, 2011 request, status as a Small Entity has been removed.

This patent is no longer entitled to small entity status. Accordingly, all future fees paid in this patent must be paid at the large entity rate.

Additionally, a courtesy copy of this decision is being mailed to the address given on the request; however, the Office will mail all future correspondence solely to the address of record.

Telephone inquires concerning this decision should be directed to the undersigned at (571) 272-7751.

/Joan Olszewski/
Joan Olszewski
Petitions Examiner
Office of Petitions

cc: Patterson & Sheridan, LLP
595 Shrewsbury Avenue
Suite 100
Shrewsbury, NJ 07702

UNITED STATES PATENT AND TRADEMARK OFFICE

Commissioner for Patents
United States Patent and Trademark Office
P.O. Box 1450
Alexandria, VA 22313-1450
www.uspto.gov

**HANA VERNY**
**PETERS, VERNY, JONES & SCHMITT, LLP**
**425 SHERMAN AVENUE**
**SUITE 230**
**PALO ALTO CA 94306**

MAILED

SEP 14 2010

OFFICE OF PETITIONS

| | | |
|---|---|---|
| In re Application of | : | |
| Pauletti et al. | : | |
| Application No. 10/444,634 | : | DECISION ON PETITION |
| Filed: May 22, 2003 | : | |
| Attorney Docket No. 3715.10-1 | : | |

This is a decision on the petition under the unintentional provisions of 37 CFR 1.137(b), filed June 15, 2009, to revive the above-identified application.

The petition is **GRANTED**.

This application became abandoned as a result of petitioner's failure to file an appeal brief (and fee required by 37 CFR 41.20(b)(2))within the time period provided in 37 CFR 41.37(a)(1). No extensions of time were obtained. As an appeal brief (and appeal brief fee) was not filed within two (2) months of the Notice of Appeal filed June 27, 2008, the appeal was dismissed and the proceedings as to the rejected claims were terminated. See 37 CFR 1.197(b). As no claim was allowed, the application became abandoned on August 28, 2008. See MPEP 1215.04. A Notice of Abandonment was mailed February 26, 2009.

The petition satisfies the requirements of 37 CFR 1.137(b) in that petitioner has supplied (1) the reply in the form of a Request for Continued Examination (RCE) and fee of $405.00, and the submission required by 37 CFR 1.114; (2) the petition fee of $810.00; and (3) a proper statement of unintentional delay.

Telephone inquiries concerning this decision should be directed to the undersigned at (571) 272-7751.

This matter is being referred to Technology Center AU 1615 for processing of the Request for Continued Examination under 37 CFR 1.114 and the Amendment filed with the instant petition.

Joan Olszewski
Petitions Examiner
Office of Petitions

UNITED STATES PATENT AND TRADEMARK OFFICE

UNITED STATES DEPARTMENT OF COMMERCE
United States Patent and Trademark Office
Address: COMMISSIONER FOR PATENTS
P.O. Box 1450
Alexandria, Virginia 22313-1450
www.uspto.gov

| APPLICATION NO. | FILING DATE | FIRST NAMED INVENTOR | ATTORNEY DOCKET NO. | CONFIRMATION NO. |
|---|---|---|---|---|
| 10/444,809 | 05/22/2003 | Kathryn Cytanovich | CYT | 5330 |

32969 7590 04/04/2012
JOHN P. SUTTON
2421 PIERCE STREET
SAN FRANCISCO, CA 94115-1131

| EXAMINER |
|---|
| BANKS, DERRIS HOLT |

| ART UNIT | PAPER NUMBER |
|---|---|
| 3729 | |

| MAIL DATE | DELIVERY MODE |
|---|---|
| 04/04/2012 | PAPER |

**Please find below and/or attached an Office communication concerning this application or proceeding.**

The time period for reply, if any, is set in the attached communication.

UNITED STATES PATENT AND TRADEMARK OFFICE

---

BEFORE THE
BOARD OF PATENT APPEALS AND INTERFERENCES

---

*Ex parte* Kathryn Cytanovich

Application 10/444,809
Technology Center 3700

---

DECISION ON PETITION

This is a decision on the "Petition to the Director Under 37 C.F.R. §1.182," filed August 23, 2011 ("Petition").

The Petiton seeks "the grant of a patent on [Appellant's pending] application." Petition, p. 1.

FINDINGS

1. The present application was filed on May 22, 2003.
2. On February 21, 2007, the Examiner entered a Final Rejection.
3. On September 25, 2007, Appellant filed a Notice of Appeal.
4. On September 22, 2009, the Board of Patent Appeals and Interferences entered a Docketing Notice docketing the appeal in this application.
5. On August 23, 2011, Appellant filed the present Petition.
6. In the Examiner's Answer, entered April 16, 2008, the pending claims were held to be unpatentable as follows:

Claims 1-2, 5-6, 8-13, 23-25 are rejected under 35 U.S.C. 101 because the claimed invention is directed to non-statutory subject matter.

## RELEVANT AUTHORITY

In respect to petitions to the Director, 37 C.F.R. § 1.181 specifies:

(a) Petition may be taken to the Director:

(1) From any action or requirement of any examiner in the *ex parte* prosecution of an application, or in *ex parte* or *inter partes* prosecution of a reexamination proceeding **which is not subject to appeal to the Board of Patent Appeals and Interferences** or to the court . . . .

(emphasis added).

## DISCUSSION

As indicated, Appellant has appealed the Examiner's Final Rejection of the pending claims under 35 U.S.C. § 101 to the Board of Patent Appeals and Interferences and the Appeal has been docketed by the Board. Thus, the Appeal presently is pending at the Board.

Further, as specified by Rule 181(a)(1), a matter which is "subject to appeal to the Board" is not reviewable by petition to the Director. The patentability of Appellant's claims will be decided by the Board.

DECISION

For the foregoing reason, the Petition is DISMISSED.

James Donald Smith
Chief Administrative Patent Judge

John P. Sutton
123 Race Street
Grass Valley, CA 95945

UNITED STATES PATENT AND TRADEMARK OFFICE

Commissioner for Patents
United States Patent and Trademark Office
P.O. Box 1450
Alexandria, VA 22313-1450
www.uspto.gov

MERCK
C/O SIRNA THERAPEUTICS, INC.
1700 OWENS STREET, 4TH FLOOR
SAN FRANCISCO, CA 94158

MAILED
MAR 09 2011
OFFICE OF PETITIONS

In re Application of :
James McSwiggen et al :
Application No. 10/444,853 :
Filed: May 23, 2003 :
Attorney Docket No. SIR-MIS-00001-US-CIP

ON PETITION

This is a decision on the petition, filed March 7, 2011 under 37 CFR 1.313(c)(2) to withdraw the above-identified application from issue after payment of the issue fee.

The petition is **GRANTED**.

The above-identified application is withdrawn from issue for consideration of a submission under 37 CFR 1.114 (request for continued examination). See 37 CFR 1.313(c)(2).

**Petitioner is advised that the issue fee paid on December 15, 2010 in the above-identified application cannot be refunded. If, however, the above-identified application is again allowed, petitioner may request that it be applied towards the issue fee required by the new Notice of Allowance.**[1]

Telephone inquiries should be directed to Irvin Dingle at (571) 272-3210.

This matter is being referred to Technology Center AU 1635 for processing of the request for continued examination under 37 CFR 1.114 and for consideration of the concurrently filed amendment.

/Irvin Dingle/
Irvin Dingle
Petitions Examiner
Office of Petitions

---

[1] The request to apply the issue fee to the new Notice may be satisfied by completing and returning the new Issue Fee Transmittal Form PTOL-85(b), which includes the following language thereon: Commissioner for Patents is requested to apply the Issue Fee and Publication Fee (if any) or re-apply any previously paid issue fee to the application identified above. Petitioner is advised that, whether a fee is indicated as being due or not, the Issue Fee Transmittal Form **must** be completed and timely submitted to avoid abandonment. Note the language in bold text on the first page of the Notice of Allowance and Fee(s) Due (PTOL-85).

UNITED STATES PATENT AND TRADEMARK OFFICE

UNITED STATES DEPARTMENT OF COMMERCE
United States Patent and Trademark Office
Address: COMMISSIONER FOR PATENTS
P.O. Box 1450
Alexandria, Virginia 22313-1450
www.uspto.gov

| APPLICATION NO. | FILING DATE | FIRST NAMED INVENTOR | ATTORNEY DOCKET NO. | CONFIRMATION NO. |
|---|---|---|---|---|
| 10/444,853 | 05/23/2003 | James McSwiggen | SIR-MIS-00001-US-CIP | 6870 |

210 7590 12/23/2011
MERCK
P O BOX 2000
RAHWAY, NJ 07065-0907

| EXAMINER |
|---|
| BOWMAN, AMY HUDSON |

| ART UNIT | PAPER NUMBER |
|---|---|
| 1635 | |

| MAIL DATE | DELIVERY MODE |
|---|---|
| 12/23/2011 | PAPER |

**Please find below and/or attached an Office communication concerning this application or proceeding.**

The time period for reply, if any, is set in the attached communication.

UNITED STATES PATENT AND TRADEMARK OFFICE

Commissioner for Patents
United States Patent and Trademark Office
P.O. Box 1450
Alexandria, VA 22313-1450
www.uspto.gov

DEC 23 2011

| | | |
|---|---|---|
| In re Application of | : | |
| James McSwiggen, et al | : | |
| Serial No. 10/444853 | : | NOTICE OF WITHDRAWAL |
| Filed: May 23, 2003 | : | FROM ISSUE |
| For: RNA INTERFERENCE MEDIATED INHIBITION | : | UNDER 37 CFR 1.313(b) |
| OF GENE EXPRESSION USING CHEMICALLY | : | |
| MODIFIED SHORT INTERFERING | : | |
| NUCLEIC ACID | : | |

The above-identified application is withdrawn from issue after payment of the issue fee due to a mistake on the part of the Office. See 37 CFR 1.313(b).

The above-identified application is hereby withdrawn from issue.

The issue fee is refundable upon written request. If, however, the application is again found allowable, the issue fee can be applied toward payment of the issue fee in the amount identified on the new Notice of Allowance and Issue Fee Due upon written request. This request and any balance due must be received on or before the due date noted in the new Notice of Allowance in order to prevent abandonment of the application.

Telephone inquiries should be directed to the SPE, Heather Calamita (571) 272-2876.

The above-identified application is being forwarded to the examiner for prompt appropriate action, including notifying applicant of the new status of this application.

Doris C. Elliott, for

Jacqueline M. Stone, Director
Technology Center 1600

MERCK
P.O. BOX 2000
RAHWAY, NJ 07065-0907

cc: Publications, Scanning

PTO/SB/44 (04-05)
Approved for use through 04/30/2007. OMB 0651-0033
U.S. Patent and Trademark Office; U.S. DEPARTMENT OF COMMERCE
Under the Paperwork Reduction Act of 1995, no persons are required to respond to a collection of information unless it displays a valid OMB control number.
(Also Form PTO-1050)

# UNITED STATES PATENT AND TRADEMARK OFFICE
## CERTIFICATE OF CORRECTION



PATENT NO. : 7,264,613
APPLICATION NO.: 10/445,166
ISSUE DATE : September 4, 2007
INVENTOR(S) : Kevin Woehr, et al.

It is certified that an error appears or errors appear in the above-identified patent and that said Letters Patent is hereby corrected as shown below:

**In the Specifications**

| | | |
|---|---|---|
| ~~Column 3, line 35~~ | ~~Delete "te"~~<br>~~Insert --the--~~ | Already "the" in the Specification. |
| Column 6, line 26 | Delete "left"<br>Insert --right-- | |
| Column 8, line 2 | After "the needle.",<br>Insert --The bump 68 of FIG. 4A is not shown in the drawing of FIG. 5A.-- | |
| Column 8, line 15 | After "needle guard.",<br>Insert --The bump 68 of FIG. 4A is not shown in the drawing of FIG. 6A.-- | |
| Column 8, line 21 | Delete "embodiment" | |
| Column 8, line 34 | Delete "proximal"<br>Insert --distal-- | |
| Column 8, line 59 | Delete "C"<br>Insert --A-- | |
| Column 9, line 21 | After "crimp 61",<br>Insert --(FIG. 7E)-- | |

MAILING ADDRESS OF SENDER (Please do not use customer number below):
CHRISTIE, PARKER & HALE, LLP.
P.O. Box 7068
Pasadena, California 91109-7068

This collection of information is required by 37 CFR 1.322, 1.323, and 1.324. The information is required to obtain or retain a benefit by the public which is to file (and by the USPTO to process) an application. Confidentiality is governed by 35 U.S.C. 122 and 37 CFR 1.14. This collection is estimated to take 1.0 hour to complete, including gathering, preparing, and submitting the completed application form to the USPTO. Time will vary depending upon the individual case. Any comments on the amount of time you require to complete this form and/or suggestions for reducing this burden, should be sent to the Chief Information Officer, U.S. Patent and Trademark Office, U.S. Department of Commerce, P.O. Box 1450, Alexandria, VA 22313-1450. DO NOT SEND FEES OR COMPLETED FORMS TO THIS ADDRESS. **SEND TO: Attention Certificate of Corrections Branch, Commissioner for Patents, P.O. Box 1450, Alexandria, VA 22313-1450.**

*If you need assistance in completing the form, call 1-800-PTO-9199 and select option 2.*

PTO/SB/44 (04-05)
Approved for use through 04/30/2007. OMB 0651-0033
U.S. Patent and Trademark Office; U.S. DEPARTMENT OF COMMERCE
Under the Paperwork Reduction Act of 1995, no persons are required to respond to a collection of information unless it displays a valid OMB control number.
(Also Form PTO-1050)

# UNITED STATES PATENT AND TRADEMARK OFFICE
## CERTIFICATE OF CORRECTION



PATENT NO. : 7,264,613

APPLICATION NO.: 10/445,166

ISSUE DATE : September 4, 2007

INVENTOR(S) : Kevin Woehr, et al.

It is certified that an error appears or errors appear in the above-identified patent and that said Letters Patent is hereby corrected as shown below:

| | |
|---|---|
| Column 9, line 29 | Delete "11 comprises",<br>Insert --11A and 11B comprises-- |
| Column 9, line 35 | Delete "FIG. 11",<br>Insert --FIGS. 11A and 11B-- |
| Column 9, line 47 | Delete "t"<br>Insert --at-- |
| Column 10, line 5 | Delete "108"<br>Insert --10B-- |
| Column 10, line 10 | Delete "rip"<br>Insert --tip-- |
| Column 10, line 32 | Delete "t"<br>Insert --at-- |
| Column 14, line 65 | Delete "assemble"<br>Insert --assembly-- |

MAILING ADDRESS OF SENDER (Please do not use customer number below):

CHRISTIE, PARKER & HALE, LLP.
P.O. Box 7068
Pasadena, California 91109-7068

This collection of information is required by 37 CFR 1.322, 1.323, and 1.324. The information is required to obtain or retain a benefit by the public which is to file (and by the USPTO to process) an application. Confidentiality is governed by 35 U.S.C. 122 and 37 CFR 1.14. This collection is estimated to take 1.0 hour to complete, including gathering, preparing, and submitting the completed application form to the USPTO. Time will vary depending upon the individual case. Any comments on the amount of time you require to complete this form and/or suggestions for reducing this burden, should be sent to the Chief Information Officer, U.S. Patent and Trademark Office, U.S. Department of Commerce, P.O. Box 1450, Alexandria, VA 22313-1450. DO NOT SEND FEES OR COMPLETED FORMS TO THIS ADDRESS. **SEND TO: Attention Certificate of Corrections Branch, Commissioner for Patents, P.O. Box 1450, Alexandria, VA 22313-1450.**

*If you need assistance in completing the form, call 1-800-PTO-9199 and select option 2.*

PTO/SB/44 (04-05)
Approved for use through 04/30/2007. OMB 0651-0033
U.S. Patent and Trademark Office; U.S. DEPARTMENT OF COMMERCE
Under the Paperwork Reduction Act of 1995, no persons are required to respond to a collection of information unless it displays a valid OMB control number.
(Also Form PTO-1050)

# UNITED STATES PATENT AND TRADEMARK OFFICE
## CERTIFICATE OF CORRECTION



PATENT NO. : 7,264,613

APPLICATION NO.: 10/445,166

ISSUE DATE : September 4, 2007

INVENTOR(S) : Kevin Woehr, et al.

It is certified that an error appears or errors appear in the above-identified patent and that said Letters Patent is hereby corrected as shown below:

**In the Drawings**

| | |
|---|---|
| FIGS. 3A and 3B, Sheet 4 of 17 | Delete Drawing Sheet 4 and Substitute therefore the Drawing Sheet consisting of FIGS. 3A and 3B, as shown on the attached page |
| FIGS. 5A and 5B, Sheet 6 of 17 | Delete Drawing Sheet 6 and Substitute therefore the Drawing Sheet consisting of FIGS. 5A and 5B, as shown on the attached page |
| FIGS. 7A and 7B, Sheet 8 of 17 | Delete Drawing Sheet 8 and Substitute therefore the Drawing Sheet consisting of FIGS. 7A and 7B, as shown on the attached page |
| FIGS. 7D and 7E, Sheet 9 of 17 | Delete Drawing Sheet 9 and Substitute therefore the Drawing Sheet consisting of FIGS. 7D and 7E, as shown on the attached page |
| FIGS. 7C, 8 and 9, Sheet 10 of 17 | Delete Drawing Sheet 10 and Substitute therefore the Drawing Sheet consisting of FIGS. 7C, 8 and 9, as shown on the attached page |

MAILING ADDRESS OF SENDER (Please do not use customer number below):

CHRISTIE, PARKER & HALE, LLP.
P.O. Box 7068
Pasadena, California 91109-7068

This collection of information is required by 37 CFR 1.322, 1.323, and 1.324. The information is required to obtain or retain a benefit by the public which is to file (and by the USPTO to process) an application. Confidentiality is governed by 35 U.S.C. 122 and 37 CFR 1.14. This collection is estimated to take 1.0 hour to complete, including gathering, preparing, and submitting the completed application form to the USPTO. Time will vary depending upon the individual case. Any comments on the amount of time you require to complete this form and/or suggestions for reducing this burden, should be sent to the Chief Information Officer, U.S. Patent and Trademark Office, U.S. Department of Commerce, P.O. Box 1450, Alexandria, VA 22313-1450. DO NOT SEND FEES OR COMPLETED FORMS TO THIS ADDRESS. **SEND TO: Attention Certificate of Corrections Branch, Commissioner for Patents, P.O. Box 1450, Alexandria, VA 22313-1450.**

*If you need assistance in completing the form, call 1-800-PTO-9199 and select option 2.*

Receipt date: 03/24/2008

OIPE IAP92
MAR 24 2008
PATENT & TRADEMARK OFFICE

Docket No.: 50413/K163
Inventor(s): Kevin Woehr et al.
Patent No. 7,264,613
Issue Date: September 4, 2007
**Replacement**
**Sheet 4 of 17**

10445166 - GAU: 3767

OK TO ENTER: /AG/

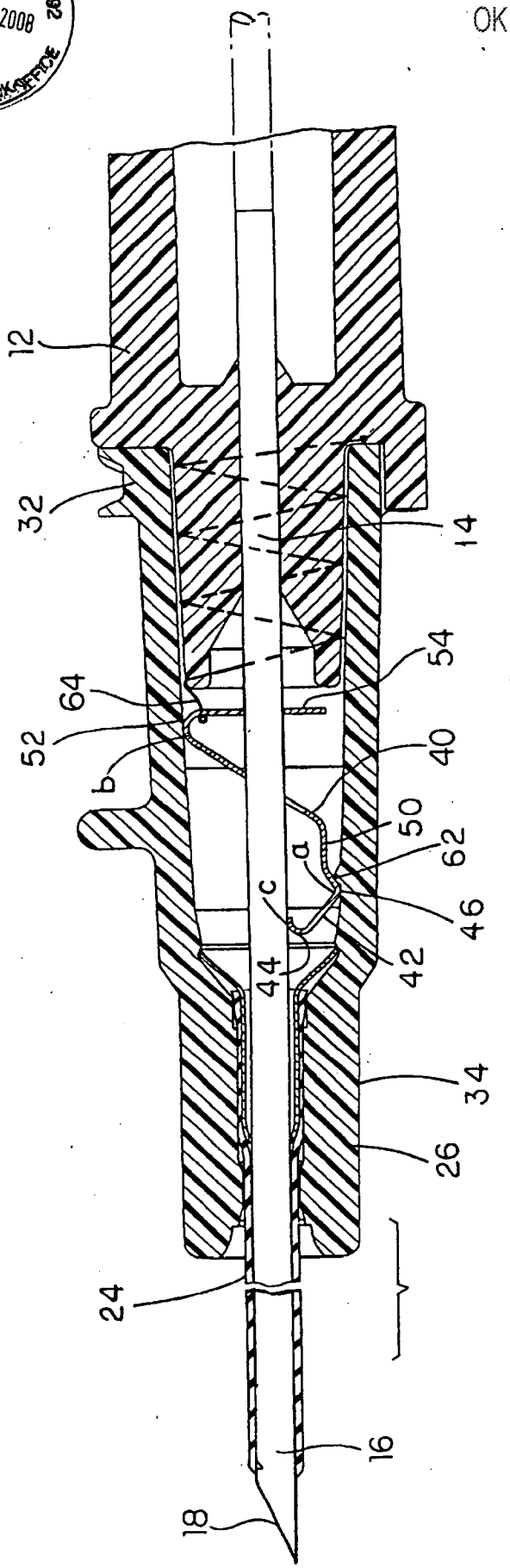


FIG. 3A

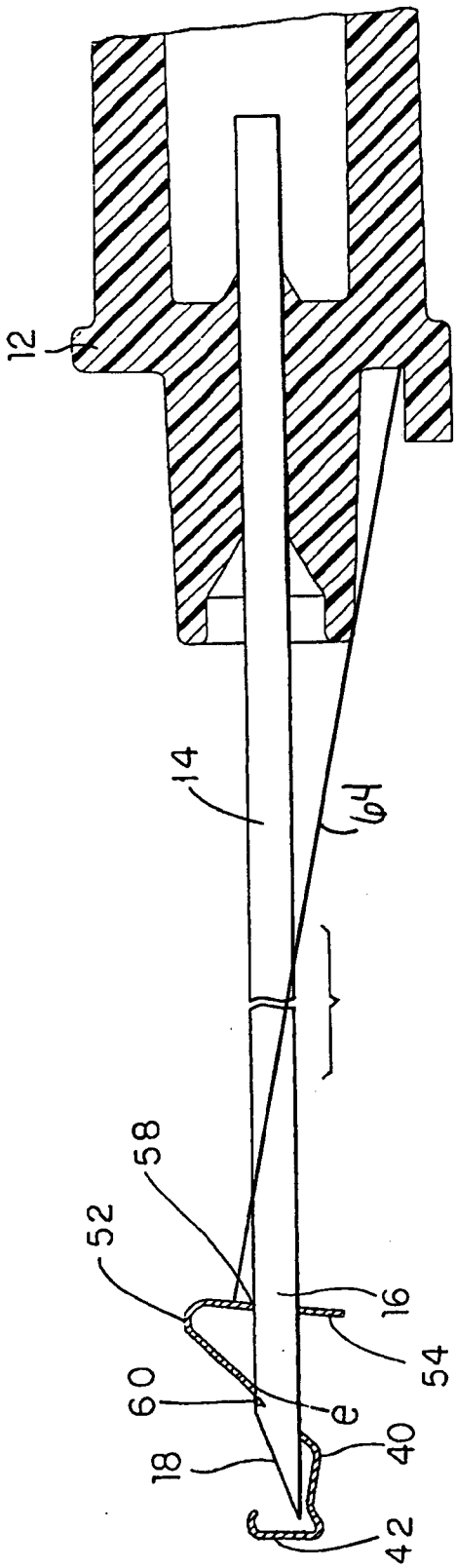


FIG. 3B

06/09/2011 /Andrew Gilbert/

OK TO ENTER: /AG/

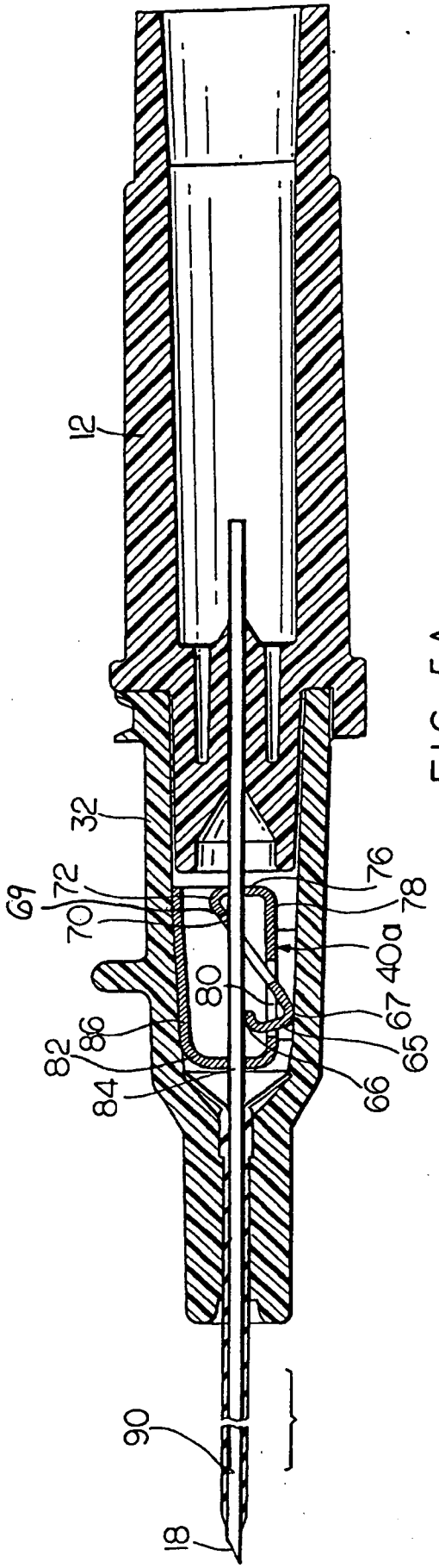


FIG. 5A

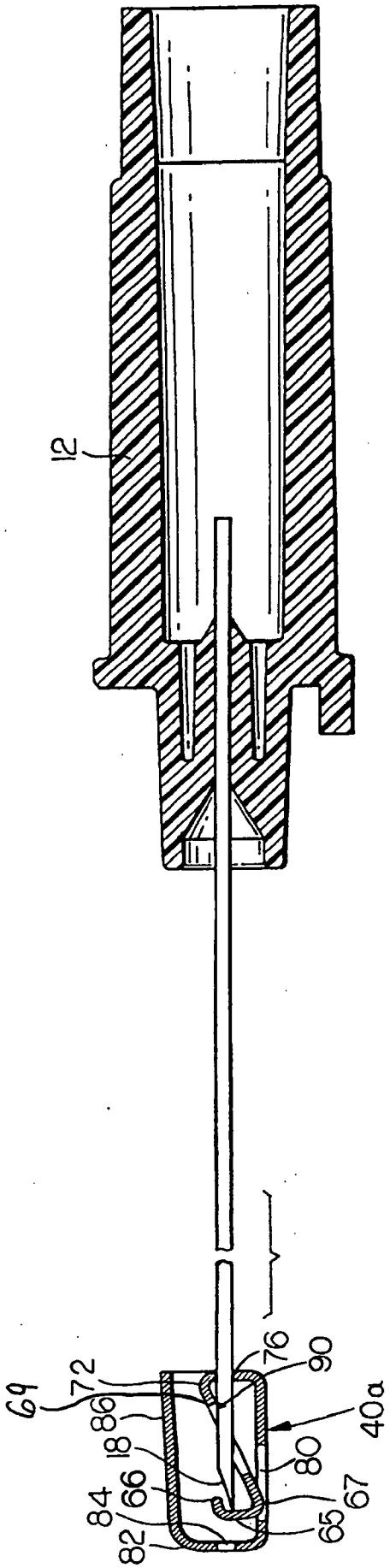


FIG. 5B

06/09/2011

/Andrew Gilber

OK TO ENTER: /AG/

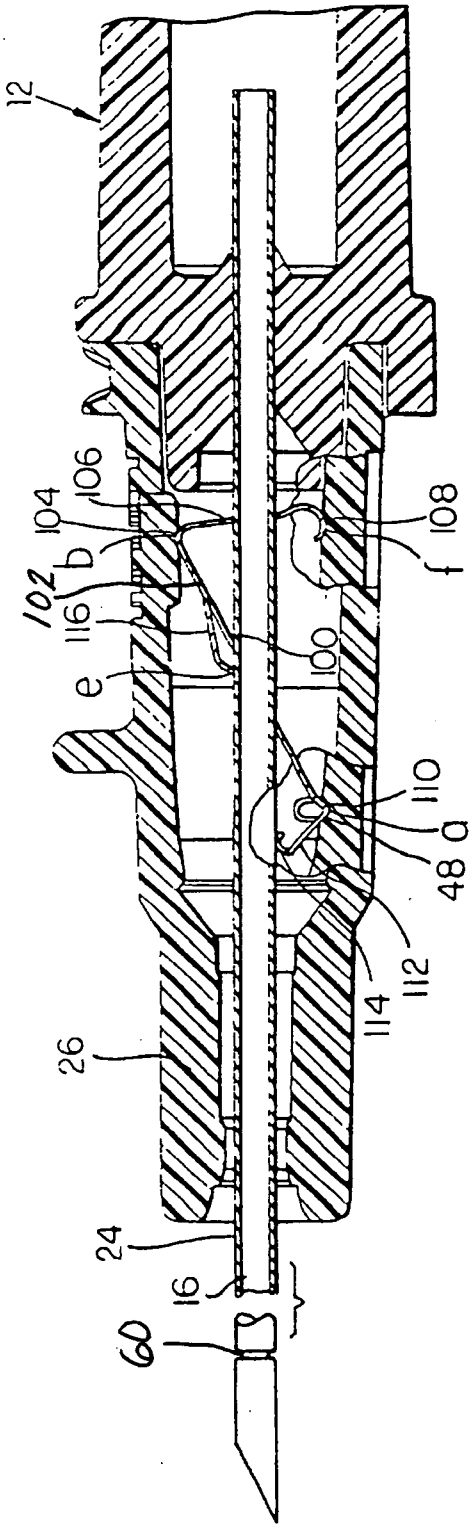


FIG. 7A

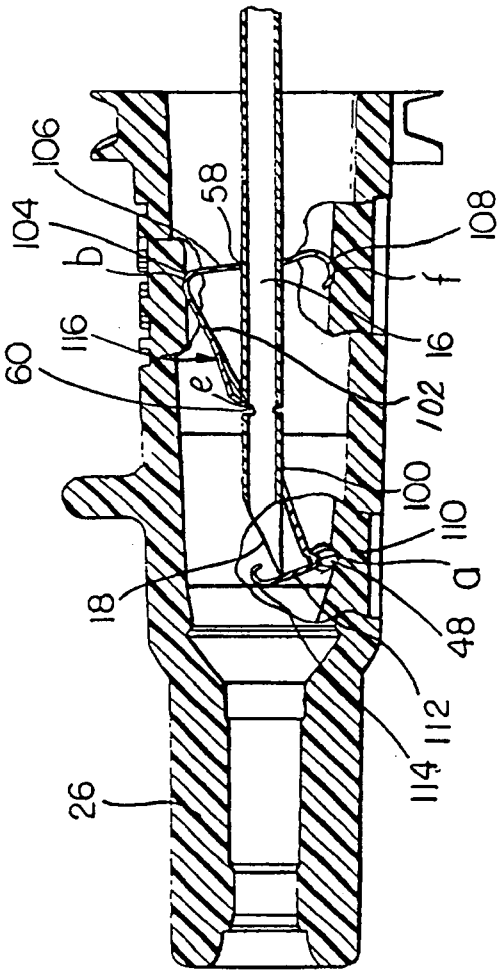


FIG. 7B

OK TO ENTER: /AG/

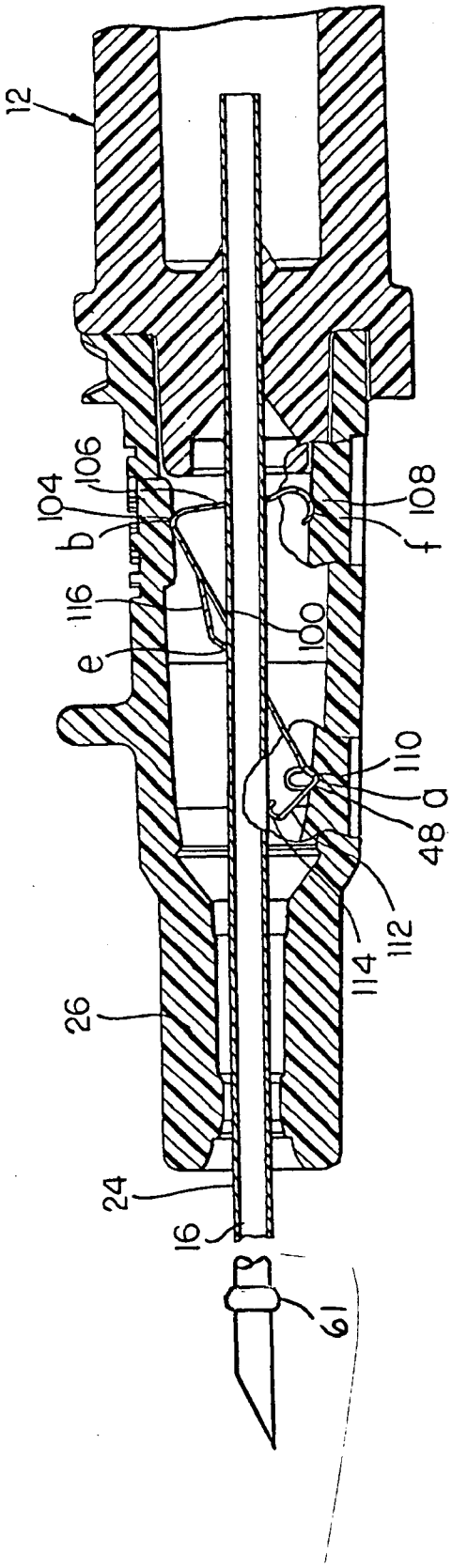


FIG. 7D

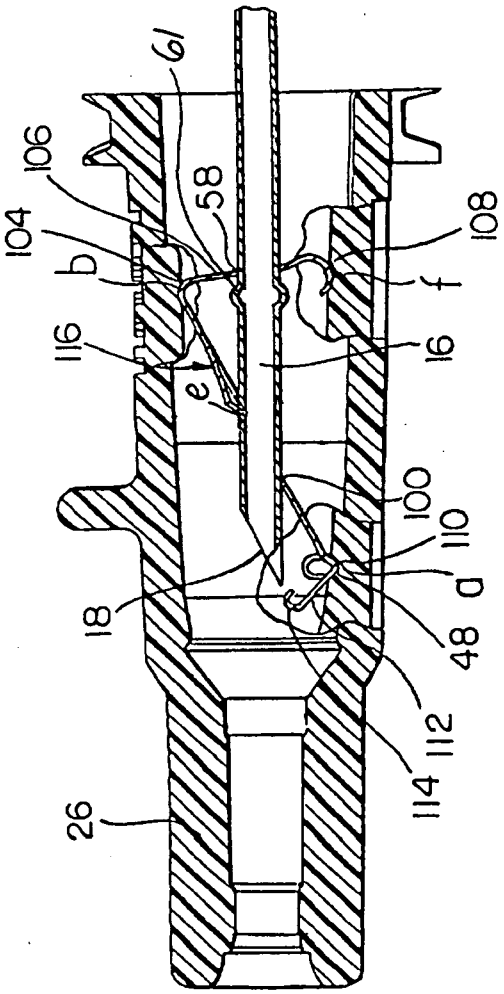


FIG. 7E

OK TO ENTER: /AG/

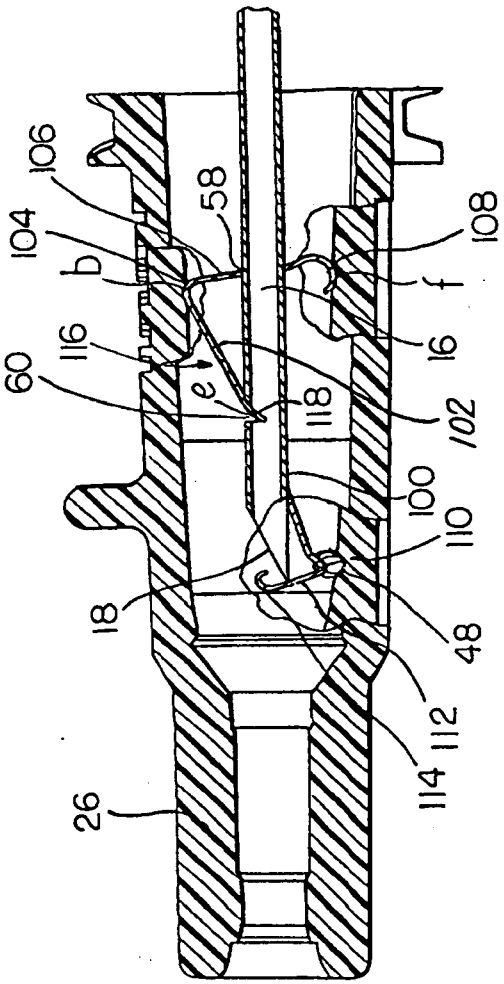


FIG. 7C

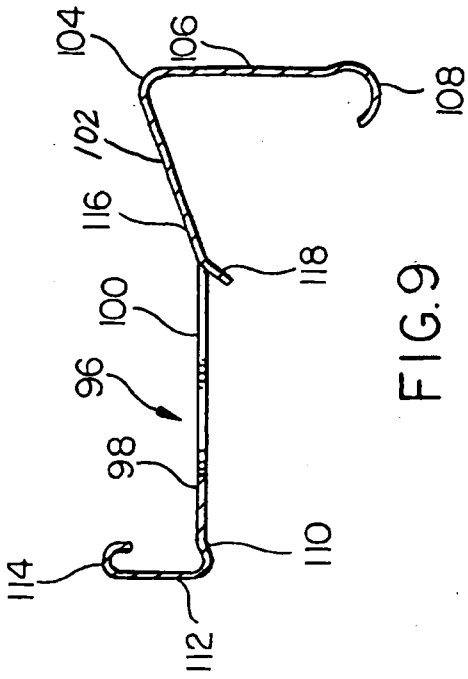


FIG. 9

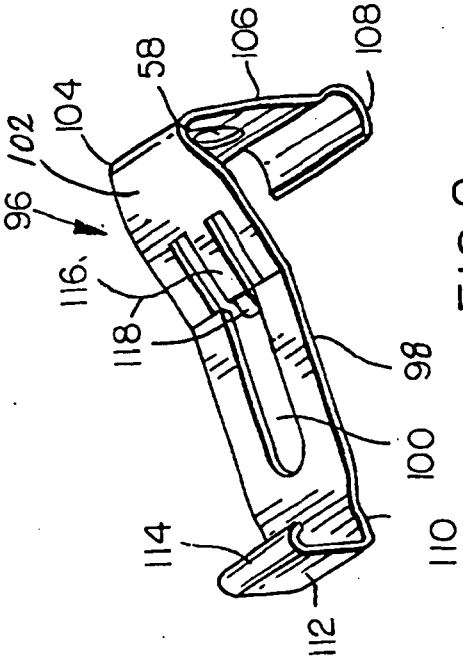


FIG. 8

## SPE RESPONSE FOR CERTIFICATE OF CORRECTION

**Paper No.:** _____

**DATE** : May 29, 2008

**TO SPE OF** : ART UNIT 3767

**SUBJECT** : Request for Certificate of Correction for Appl. No 10/445166 patent no7264613

Please respond to this request for a certificate of correction within 7 days.

Please review the requested changes/corrections as shown in the **COCIN** document(s) in the IFW application image. No new matter should be introduced, nor should the scope or meaning of the claims be changed.

Please complete the response (see below) and forward the completed response to scanning using document code **COCX**

**Magdalene Talley**

**Certificates of Correction Branch**

**703-308-9390 ext. 116**

**Thank You For Your Assistance**

**The request for issuing the above-identified correction(s) is hereby:**

Note your decision on the appropriate box.

- ☐ **Approved** — **All** changes apply.
- ☒ **Approved in Part** — Specify below which changes **do not** apply.
- ☐ **Denied** — State the reasons for denial below.

**Comments:** See annotations on Request of Correction. "Column 3, ln 35 Delete "te" Insert --the--" has been denied because the Specification already reads "the". Additionally "Column 14, ln 65 Delete "assemble" Insert --assembly--" occurs on column 14, ln 64 - not ln 65.

/Andrew M. Gilbert/

/THEODORE STIGELL/
ACTING SPE 3767

**SPE**

3767

**Art Unit**

Paper No.: _____

DATE : 12/28/2010

TO SPE OF : ART UNIT 3644

SUBJECT : Request for Certificate of Correction for Appl. No.: 10/445,584 Patent No. 7,832,140

CofC mailroom date: 12/6/10

Please respond to this request for a certificate of correction within 7 days.

**FOR IFW FILES:**

Please review the requested changes/corrections as shown in the **COCIN** document(s) in the IFW application image. No new matter should be introduced, nor should the scope or meaning of the claims be changed.

Please complete the response (see below) and forward the completed response to scanning using document code **COCX**.

**FOR PAPER FILES:**

Please review the requested changes/corrections as shown in the attached certificate of correction. Please complete this form (see below) and forward it with the file to:

**Certificates of Correction Branch (CofC)**
**Randolph Square – 9D10-A**
**Palm Location 7580**

*Ernest C. White, LIE*

**Certificates of Correction Branch**
**703-756-1814**

**Thank You For Your Assistance**

---

**The request for issuing the above-identified correction(s) is hereby:**

Note your decision on the appropriate box.

| | | |
|---|---|---|
| X | **Approved** | **All** changes apply. |
| ❑ | **Approved in Part** | Specify below which changes **do not** apply. |
| ❑ | **Denied** | State the reasons for denial below. |

**Comments:**

/Timothy D. Collins/ 3644
SPE Art Unit

UNITED STATES PATENT AND TRADEMARK OFFICE

Commissioner for Patents
United States Patent and Trademark Office
P.O. Box 1450
Alexandria, VA 22313-1450
www.uspto.gov

**YOUNG & THOMPSON**
**209 MADISON STREET**
**SUITE 500**
**ALEXANDRIA, VA 22314**

**MAILED**

NOV 15 2010

**OFFICE OF PETITIONS**

In re Application of :
Beilfuss et al. :
Application No. 10/445,715 : ON PETITION
Filed: May 27, 2003 :
Attorney Docket No. 0503-1119 :

This is a decision on the petition under the unintentional provisions of 37 CFR 1.137(b), filed July 1, 2010, to revive the above-identified application.

The petition is **GRANTED**.

The application became abandoned for failure to timely file a reply within the meaning of 37 CFR 1.113 to the final Office action of November 6, 2008. The proposed reply required for consideration of a petition to revive must be a Notice of Appeal (and appeal fee required by 37 CFR 41.20(b)(2), an amendment that *prima facie* places the application in condition for allowance, a Request for Continued Examination and submission (37 CFR 1.114), or the filing of a continuing application under 37 CFR 1.53(b). See MPEP 711.03(c)(II)(A)(2). No extensions of time pursuant to the provisions of 37 CFR 1.136(a) were timely obtained. Accordingly, the date of abandonment of this application is February 7, 2009. A Notice of Abandonment was mailed June 23, 2009.

The petition satisfies the requirements of 37 CFR 1.137(b) in that petitioner has supplied (1) the reply in the form of a continuing application, (2) the petition fee of $1,620 , and (3) a proper statement of unintentional delay.

This application is being revived solely for purposes of continuity. As continuity has been established by this decision, the application is again abandoned in favor of continuing application number 12/828,713.

Telephone inquiries concerning this decision should be directed to the undersigned at (571) 272-6059.

A. Kelley

Alicia Kelley
Petitions Examiner
Office of Petitions

UNITED STATES PATENT AND TRADEMARK OFFICE

Commissioner for Patents
United States Patent and Trademark Office
P.O. Box 1450
Alexandria, VA 22313-1450
www.uspto.gov

Duane Nowack D.D.S.
1721 Main St #108
Ramona CA 92065

MAILED
MAR 01 2011
OFFICE OF PETITIONS

In re Application of :
Duane Nowack :
Application No. 10/445,755 : ON PETITION
Filed: 05/27/2003 :
Title: DENTURE ATTACHMENT SYSTEM :
AND METHOD :

This is a decision on the petition under 37 CFR 1.137(b) filed November 23, 2010, to revive the above-identified application.

The petition under 37 CFR 1.137(b) is **GRANTED**.

On June 20, 2007, the Office mailed a Notice of Noncompliant Amendment, which set a one month or thirty day period, whichever was longer, for reply to avoid abandonment. The above-identified application became abandoned by operation of law on July 21, 2007. On October 31, 2007, the Office mailed a Notice of Abandonment.

The present petition satisfies the requirements of 37 CFR 1.137(b) in that petitioner has supplied (1) the required reply, (2) the petition fee, and (3) an acceptable statement of unintentional delay. 37 CFR 1.137(b)(3) requires a statement that "the entire delay in filing the required reply from the due date for the reply until the filing of a grantable petition pursuant to this paragraph was unintentional" be submitted. However, the statement presented will be accepted and construed as the statement required by 37 CFR 1.137(b)(3). Petitioner must notify the Office if this is not a correct interpretation of the statement contained in the present petition.

This application is being referred to Technology Center AU 3732 for appropriate action.

Inquiries concerning this decision should be directed to the undersigned at (571) 272-3211.

Christina Tartera Donnell

Christina Tartera Donnell
Senior Petitions Attorney
Office of Petitions

UNITED STATES PATENT AND TRADEMARK OFFICE

Commissioner for Patents
United States Patent and Trademark Office
P.O. Box 1450
Alexandria, VA 22313-1450
www.uspto.gov

**AKA CHAN LLP / ORACLE**
**900 LAFAYETTE STREET**
**SUITE 710**
**SANTA CLARA CA 95050**

**MAILED**

JAN 12 2011

**OFFICE OF PETITIONS**

In re Application of
MARWAH, Vineet
Application No. 10/445,793
Filed: May 27, 2003
Attorney Docket No. **ORACP005**

DECISION ON PETITION
TO WITHDRAW
FROM RECORD

This is a decision on the Request to Withdraw as attorney or agent of record under 37 C.F.R. § 1.36(b), filed December 24, 2010.

The request is **NOT APPROVED**.

The Office has revised its change in procedure for request to withdraw from representation applies to requests filed on or after May 12, 2008.

The Office will no longer accept address changes to a new practitioner or law firm filed with a Request, absent the filing of a power of attorney to the new representative. The Office will either change the correspondence address of record to the most current address information provided for the assignee of the entire interest who properly became of record under 37 CFR 3.71 or, if no assignee of the entire interest has properly been made of record under 37 CFR 3.71, the most current address information provided for the first named inventor.

Accordingly, the request to withdraw from record cannot be approved because the request to change the correspondence address is not that of: (1) the first named inventor; or (2) an assignee of the entire interest under 37 C.F.R 3.71 who has properly intervened.

If an assignee has intervened in this application, then a Statement under 37 CFR 3.73(b) or a copy of the actual assignment must be submitted with a renewed request.

All future communications from the Office will continue to be directed to the above-listed address until otherwise notified by applicant.

Telephone inquiries concerning this decision should be directed to Tredelle Jackson at 571-272-2783.

/Tredelle D. Jackson/
Paralegal Specialist
Office of Petitions

cc: **SILICON VALLEY PATENT GROUP LLP**
**ATTN: OMKAR - ORACLE**
**18805 COX AVENUE**
**SUITE 220**
**SARATOGA, CA 95070**

PTO/SB/66 (03-09)
Approved for use through 03/31/2012. OMB 0651-0016
U.S. Patent and Trademark Office: U.S. DEPARTMENT OF COMMERCE
Under the Paperwork Reduction Act of 1995, no persons are required to respond to a collection of information unless it displays valid OMB control number.

# PETITION TO ACCEPT UNINTENTIONALLY DELAYED PAYMENT OF MAINTENANCE FEE IN AN EXPIRED PATENT (37 CFR 1.378(c))

| Patent Number | Issue Date (YYYY-MM-DD) | Application Number | Filing Date (YYYY-MM-DD) | Docket Number (if applicable) |
|---|---|---|---|---|
| 7277744 | 2007-10-02 | 10445997 | 2003-05-27 | 658-002 and 36-01B |

CAUTION: Maintenance fee (and surcharge, if any) payment must correctly identify: (1) the patent number and (2) the application number of the actual U.S. application leading to issuance of that patent to ensure the fee(s) is/are associated with the correct patent. 37 CFR 1.366(c) and (d).

SMALL ENTITY
☒ Patentee claims, or has previously claimed, small entity status. See 37 CFR 1.27.

LOSS OF ENTITLEMENT TO SMALL ENTITY STATUS
☐ Patentee is no longer entitled to small entity status. See 37 CFR 1.27(g)

| NOT Small Entity | | Small Entity | |
|---|---|---|---|
| Fee | Code | Fee | Code |
| ○ 3 ½ year | (1551) | ● 3 ½ year | (2551) |
| ○ 7 ½ year | (1552) | ○ 7 ½ year | (2552) |
| ○ 11 ½ year | (1553) | ○ 11 ½ year | (2553) |

SURCHARGE
The surcharge required by 37 CFR 1.20(i)(2) (Fee Code 1558) must be paid as a condition of accepting unintentionally delayed payment of the maintenance fee.

MAINTENANCE FEE (37 CFR 1.20(e)-(g))
The appropriate maintenance fee must be submitted with this petition.

STATEMENT
THE UNDERSIGNED CERTIFIES THAT THE DELAY IN PAYMENT OF THE MAINTENANCE FEE TO THIS PATENT WAS UNINTENTIONAL

PETITIONER(S) REQUEST THAT THE DELAYED PAYMENT OF THE MAINTENANCE FEE BE ACCEPTED AND THE PATENT REINSTATED

THIS PORTION MUST BE COMPLETED BY THE SIGNATORY OR SIGNATORIES

37 CFR 1.378(d) states: "Any petition under this section must be signed by an attorney or agent registered to practice before the Patent and Trademark Office, or by the patentee, the assignee, or other party in interest."

I certify, in accordance with 37 CFR 1.4(d)(4) that I am

- ● An attorney or agent registered to practice before the Patent and Trademark Office
- ○ A sole patentee
- ○ A joint patentee; I certify that I am authorized to sign this submission on behalf of all the other patentees.
- ○ A joint patentee; all of whom are signing this e-petition
- ○ The assignee of record of the entire interest

Under the Paperwork Reduction Act of 1995, no persons are required to respond to a collection of information unless it displays valid OMB control number.

| Patent Practitioner | | | |
|---|---|---|---|
| A signature of the applicant or representative is required in accordance with 37 CFR 1.33 and 10.18. Please see 37 CFR 1.4(d) for the form of the signature | | | |
| Signature | /sjpennerReg54371/ | Date (YYYY-MM-DD) | 2012-01-05 |
| Name | Steven J. Penner | Registration Number | 54371 |

This collection of information is required by 37 CFR 1.378(c). The information is required to obtain or retain a benefit by the public which is to file (and by the USPTO to process) an application. Confidentiality is governed by 35 U.S.C. 122 and 37 CFR 1.11 and 1.14. This collection is estimated to take 1 hour to complete, including gathering, preparing, and submitting the completed application form to the USPTO. Time will vary depending upon the individual case. Any comments on the amount of time you require to complete this form and/ or suggestions for reducing this burden, should be sent to the Chief Information Officer, U.S. Patent and Trademark Office, U.S. Department of Commerce, P.O. Box 1450, Alexandria, VA 22313-1450. DO NOT SEND FEES OR COMPLETED FORMS TO THIS ADDRESS. **This form can only be used when in conjunction with EFS-Web. If this form is mailed to the USPTO, it may cause delays in reinstating the patent.**

# Privacy Act Statement

The Privacy Act of 1974 (P.L. 93-579) requires that you be given certain information in connection with your submission of the attached form related to a patent application or patent. Accordingly, pursuant to the requirements of the Act, please be advised that: (1) the general authority for the collection of this information is 35 U.S.C. 2(b)(2); (2) furnishing of the information solicited is voluntary; and (3) the principal purpose for which the information is used by the U.S. Patent and Trademark Office is to process and/or examine your submission related to a patent application or patent. If you do not furnish the requested information, the U.S. Patent and Trademark Office may not be able to process and/or examine your submission, which may result in termination of proceedings or abandonment of the application or expiration of the patent.

The information provided by you in this form will be subject to the following routine uses:

1. The information on this form will be treated confidentially to the extent allowed under the Freedom of Information Act (5 U.S.C. 552) and the Privacy Act (5 U.S.C. 552a). Records from this system of records may be disclosed to the Department of Justice to determine whether the Freedom of Information Act requires disclosure of these records.

2. A record from this system of records may be disclosed, as a routine use, in the course of presenting evidence to a court, magistrate, or administrative tribunal, including disclosures to opposing counsel in the course of settlement negotiations.

3. A record in this system of records may be disclosed, as a routine use, to a Member of Congress submitting a request involving an individual, to whom the record pertains, when the individual has requested assistance from the Member with respect to the subject matter of the record.

4. A record in this system of records may be disclosed, as a routine use, to a contractor of the Agency having need for the information in order to perform a contract. Recipients of information shall be required to comply with the requirements of the Privacy Act of 1974, as amended, pursuant to 5 U.S.C. 552a(m).

5. A record related to an International Application filed under the Patent Cooperation Treaty in this system of records may be disclosed, as a routine use, to the International Bureau of the World Intellectual Property Organization, pursuant to the Patent Cooperation Treaty.

6. A record in this system of records may be disclosed, as a routine use, to another federal agency for purposes of National Security review (35 U.S.C. 181) and for review pursuant to the Atomic Energy Act (42 U.S.C. 218(c)).

7. A record from this system of records may be disclosed, as a routine use, to the Administrator, General Services, or his/her designee, during an inspection of records conducted by GSA as part of that agency's responsibility to recommend improvements in records management practices and programs, under authority of 44 U.S.C. 2904 and 2906. Such disclosure shall be made in accordance with the GSA regulations governing inspection of records for this purpose, and any other relevant (i.e., GSA or Commerce) directive. Such disclosure shall not be used to make determinations about individuals.

8. A record from this system of records may be disclosed, as a routine use, to the public after either publication of the application pursuant to 35 U.S.C. 122(b) or issuance of a patent pursuant to 35 U.S.C. 151. Further, a record may be disclosed, subject to the limitations of 37 CFR 1.14, as a routine use, to the public if the record was filed in an application which became abandoned or in which the proceedings were terminated and which application is referenced by either a published application, an application open to public inspections or an issued patent.

9. A record from this system of records may be disclosed, as a routine use, to a Federal, State, or local law enforcement agency, if the USPTO becomes aware of a violation or potential violation of law or regulation.

UNITED STATES PATENT AND TRADEMARK OFFICE

Commissioner for Patents
United States Patent and Trademark Office
P.O. Box 1450
Alexandria, VA 22313-1450
www.uspto.gov

In re Patent No. 7277744
Issue Date: October 2,2007
Application No. 10445997
Filed: May 27,2003
Attorney Docket No. 36-01B

:
:DECISION GRANTING PETITION
:UNDER 37 CFR 1.378(c)
:

This is a decision on the electronic petition, filed January 5,2012 ,under 37 CFR 1.378(c) to accept the unintentionally delayed payment of the 3.5 year maintenance fee for the above-identified patent.

The petition is **GRANTED**.

The maintenance fee is accepted, and the above-identified patent reinstated as of January 5,2012 . This decision also constitutes notice that the fee has been accepted. An electronic copy of the petition and this decision has been created as an entry in the Image File Wrapper. Nevertheless, petitioner should print and retain an independent copy.

Telephone inquiries related to this electronic decision should be directed to the Electronic Business Center at 1-866-217-9197.

UNITED STATES PATENT AND TRADEMARK OFFICE

Commissioner for Patents
United States Patent and Trademark Office
P.O. Box 1450
Alexandria, VA 22313-1450
www.uspto.gov

**WONG, CABELLO, LUTSCH, RUTHERFORD & BRUCCULERI, L.L.P.**
**20333 SH 249 6th Floor**
**HOUSTON TX 77070**

MAILED
MAY 3 1 2011
OFFICE OF PETITIONS

| | | |
|---|---|---|
| In re Application of | : | |
| Christopher Y. Blaicher et al. | : | |
| Application No. 10/446,276 | : | DECISION ON PETITION |
| Filed: May 23, 2003 | : | TO WITHDRAW |
| Attorney Docket No. 149-0106US | : | FROM RECORD |

This is a decision on the Request to Withdraw as attorney or agent of record under 37 C.F.R. § 1.36(b), filed May 16, 2011.

The request is **NOT APPROVED.**

The Office will no longer accept address changes to a new practitioner or law firm filed with a Request, absent the filing of a power of attorney to the new representative. The Office will either change the correspondence address of record to the most current address information provided for the assignee of the entire interest who properly became of record under 37 CFR 3.71 or, if no assignee of the entire interest has properly been made of record under 37 CFR 3.71, the most current address information provided for the first named inventor.

Accordingly, the request to withdraw from record cannot be approved because a proper forwarding address was not provided. The request to change the correspondence address should be that of the: (1) the first named inventor; or (2) an assignee of the entire interest under 37 C.F.R 3.71. If an assignee has intervened in this application then a Statement under 37 CFR 3.73(b), or a copy of the actual assignment must be submitted with a renewed request.

All future communications from the Office will continue to be directed to the above-identified address until otherwise properly notified.

Telephone inquiries concerning this decision should be directed to the undersigned at 571-272- 4618.

/Kimberly Inabinet/

Kimberly Inabinet
Petitions Examiner
Office of Petitions

UNITED STATES PATENT AND TRADEMARK OFFICE

Commissioner for Patents
United States Patent and Trademark Office
P.O. Box 1450
Alexandria, VA 22313-1450
www.uspto.gov

**WONG, CABELLO, LUTSCH, RUTHERFORD & BRUCCULERI, L.L.P.**
**20333 SH 249 6th Floor**
**HOUSTON TX 77070**

MAILED

JUN 22 2011

OFFICE OF PETITIONS

| | | |
|---|---|---|
| In re Application of | : | |
| Christopher Y. Blaicher et al. | : | |
| Application No. 10/446,276 | : | DECISION ON PETITION |
| Filed: May 23, 2003 | : | TO WITHDRAW |
| Attorney Docket No. 149-0106US | : | FROM RECORD |
| | : | |

This is a decision on the renewed Request to Withdraw as attorney or agent of record under 37 C.F.R. § 1.36(b), filed June 15, 2011.

The request is **NOT APPROVED.**

The Office will no longer accept address changes to a new practitioner or law firm filed with a Request, absent the filing of a power of attorney to the new representative. The Office will either change the correspondence address of record to the most current address information provided for the assignee of the entire interest who properly became of record under 37 CFR 3.71 or, if no assignee of the entire interest has properly been made of record under 37 CFR 3.71, the most current address information provided for the first named inventor.

Accordingly, the request to withdraw from record cannot be approved because a proper forwarding address was not provided. The request to change the correspondence address should be that of the: (1) the first named inventor; or (2) an assignee of the entire interest under 37 C.F.R 3.71. If an assignee has intervened in this application then a Statement under 37 CFR 3.73(b), or a copy of the actual assignment must be submitted with a renewed request.

All future communications from the Office will continue to be directed to the above-identified address until otherwise properly notified.

Telephone inquiries concerning this decision should be directed to the undersigned at 571-272- 4618.

/Kimberly Inabinet/

Kimberly Inabinet
Petitions Examiner
Office of Petitions

UNITED STATES PATENT AND TRADEMARK OFFICE

Commissioner for Patents
United States Patent and Trademark Office
P.O. Box 1450
Alexandria, VA 22313-1450
www.uspto.gov

GEOFFREY E. DOBBIN, PATENT ATTORNEY
4278 SOUTH 6220 WEST
WEST VALLEY CITY UT 84128-6501

MAILED

JUL 12 2011

OFFICE OF PETITIONS

| | | |
|---|---|---|
| In re Patent No. 6,874,267 | : | |
| Issue Date: April 5, 2005 | : | |
| Application No. 10/446,383 | : | ON PETITION |
| Filed: May 27, 2003 | : | |
| Attorney Docket No. **GDRMF01M** | : | |

This is a decision on the petition under 37 CFR 1.378(c), filed June 17, 2011, to accept the delayed payment of a maintenance fee for the above-identified patent.

The petition is hereby **DISMISSED**.

**A petition under 37 CFR 1.378(c) must be filed within twenty-four months after the six month grace period specified in 35 USC 41(b).** Petitioner has filed a petition to reinstate for the 3 ½ year payment. However, the patent issued on April 5, 2004 and the 3 ½ year payment was due on April 5, 2009. Therefore, the set forth period in 35 USC 41(b) for paying the 3 ½ year maintenance fee expired at midnight on April 5, 2009. Accordingly, an unintentional petition to reinstate the instant patent must have been submitted no later than April 5, 2011. As the instant petition was filed on June 17, 2011, it was not timely filed and the instant patent will not be reinstated under the unintentional provisions of 37 CFR 1.378(c).

35 U.S.C. § 41(c)(1) authorizes the Commissioner to accept a delayed maintenance fee payment within twenty-four (24) months after the expiration of the six-month grace period specified in 35 U.S.C. § 41(b) if the delay is shown to have been unintentional, and authorizes the Commissioner to accept a delayed maintenance fee payment at any time if the delay is shown to have been unavoidable. Thus, 35 U.S.C. § 41(c)(1) does not authorize the Commissioner to accept a delayed maintenance fee payment later than twenty-four (24) months after the expiration of the six-month grace period specified in 35 U.S.C. § 41(b) unless the delay is shown to have been unavoidable. Since

the instant petition was not filed within twenty-four (24) months after the expiration of the six-month grace period specified in 35 U.S.C. § 41(b), the Commissioner cannot accept a delayed maintenance fee payment for the above-identified patent under 37 CFR 1.378(c).

Maintenance fees are required to be paid to maintain a patent in force beyond 4, 8 and 12 years after the date of grant.

> The periods specified [above] with respect to a reissue application, including a continuing reissue application thereof, are counted from the date of grant of the original non-reissue application on which the reissued patent is based. ***See MPEP 2504 and 37 CFR 1.362(h)***.

Petitioner may wish to pursue reinstatement of the patent under the unavoidable provisions of 37 CFR 1.378(b). A petition to accept the delayed payment of a maintenance fee under 35 USC 41(c) and 37 CFR 1.378(b) must be accompanied by (1) an adequate, verified showing that the delay was unavoidable, since reasonable care was taken to insure that the maintenance fee would be paid timely and that the petition was filed promptly after the patentee was notified of, or otherwise became aware of, the expiration of the patent, (2) payment of the appropriate maintenance fee, unless previously submitted, and (3) payment of the surcharge set forth in 37 CFR 1.20(i)(1).

Further correspondence with respect to this matter should be addressed as follows:

By Mail: Mail Stop PETITION
Commissioner for Patents
Post Office Box 1450
Alexandria, VA 22313-1450

By hand: U. S. Patent and Trademark Office
Customer Service Window, Mail Stop Petitions
Randolph Building
401 Dulany Street
Alexandria, VA 22314

The centralized facsimile number is (571) 273-8300.

Telephone inquiries should be directed to the undersigned at (571) 272-4584.

JoAnne Burke
Petitions Examiner
Office of Petitions

UNITED STATES PATENT AND TRADEMARK OFFICE

UNITED STATES DEPARTMENT OF COMMERCE
United States Patent and Trademark Office
Address: COMMISSIONER FOR PATENTS
P.O. Box 1450
Alexandria, Virginia 22313-1450
www.uspto.gov

WILSON & HAM
1811 Santa Rita Road
Suite 130
Pleasanton, CA 94566

Mail Date: 08/02/2010

| | | |
|---|---|---|
| **Applicant** | : Sanjay Jain | : DECISION ON REQUEST FOR |
| **Patent Number** | : 7652988 | : RECALCULATION of PATENT |
| **Issue Date** | : 01/26/2010 | : TERM ADJUSTMENT IN VIEW |
| **Application No** | : 10/446,419 | : OF WYETH AND NOTICE OF INTENT TO |
| **Filed** | : 05/28/2003 | : ISSUE CERTIFICATE OF CORRECTION |
| | | : |

The Request for Recalculation is **GRANTED** to the extent indicated.

The patent term adjustment has been determined to be **1779** days. The USPTO will *sua sponte* issue a certificate of correction reflecting the amount of PTA days determined by the recalculation.

Prior to the issuance of the certificate of correction, the USPTO will afford patentee an opportunity to be heard and request reconsideration. Accordingly, patentee has **one month or thirty (30) days**, whichever is longer, to file a request for reconsideration of this patent term adjustment calculation. See 35 U.S.C. 154(b)(3)(B)(ii) and 37 CFR 1.322(a)(4). No extensions of time will be granted under 37 CFR 1.136.

Patentee should use document code PET.OP if electronically filing a request for reconsideration of this patent term adjustment calculation. The patentee must also include the information required by 37 CFR 1.705(b)(2) and the fee required by 37 CFR 1.18(e). If patentee does not file a timely request for reconsideration of this patent term adjustment calculation including the information required by 37 CFR 1.705(b)(2) and the fee required by 37 CFR 1.18(e), the USPTO will issue a certificate of correction reflecting the PTA determination noted above.

Patentee should be aware that in order to preserve the right to review in the United States District Court for the District of Columbia of the USPTO patent term adjustment determination, patentee must ensure that he or she also take the steps required under 35 U.S.C. 154(b)(4)(A) in a timely manner. Nothing in the request for recalculation should be construed as providing an alternative time frame for commencing a civil action under 35 U.S.C. 154(b)(4)(A).

Any questions concerning this decision should be directed to the Office of Patent Legal Administration at 571-272-7702.

UNITED STATES PATENT AND TRADEMARK OFFICE

UNITED STATES DEPARTMENT OF COMMERCE
United States Patent and Trademark Office
Address: COMMISSIONER FOR PATENTS
P.O. Box 1450
Alexandria, Virginia 22313-1450
www.uspto.gov

| APPLICATION NO. | FILING DATE | FIRST NAMED INVENTOR | ATTORNEY DOCKET NO. | CONFIRMATION NO. |
|---|---|---|---|---|
| 10/446,572 | 05/27/2003 | Lee Amaitis | 02-1076 | 1958 |

63710 7590 03/04/2011
INNOVATION DIVISION
CANTOR FITZGERALD, L.P.
110 EAST 59TH STREET (6TH FLOOR)
NEW YORK, NY 10022

| EXAMINER |
|---|
| ZECHER, MICHAEL R |

| ART UNIT | PAPER NUMBER |
|---|---|
| 3691 | |

| MAIL DATE | DELIVERY MODE |
|---|---|
| 03/04/2011 | PAPER |

**Please find below and/or attached an Office communication concerning this application or proceeding.**

The time period for reply, if any, is set in the attached communication.

UNITED STATES PATENT AND TRADEMARK OFFICE

Commissioner for Patents
United States Patent and Trademark Office
P.O. Box 1450
Alexandria, VA 22313-1450
www.uspto.gov

MAR 0 4 2011

INNOVATION DIVISION
CANTOR FITZGERALD, L.P.
110 EAST 59TH STREET (6TH FLOOR)
NEW YORK NY 10022

| | | |
|---|---|---|
| In re Application of: Lee AMAITIS et al. | : | **DECISION ON PETITION** |
| Application No. 10/446,572 | : | **TO WITHDRAW** |
| Filed: May 27, 2003 | : | **THE HOLDING OF** |
| For: INTERACTIVE TRADING APPLICATION | : | **ABANDONMENT** |

This is a decision on the petition filed on January 13, 2009 to vacate the Office actions mailed on November 13, 2008, March 18, 2008 and September 30, 2008. This petition is treated as a petition under 37 CFR 1.181 requesting that the Director invoke supervisory review to withdraw the holding of abandonment.

The petition is **DENIED**.

A review of the record shows that on March 18, 2008, a Requirement for Restriction was mailed. On August 18, 2008, applicants filed an Election to the Restriction Requirement. On September 30, 2008, a notice of Non-Responsive Election was mailed. On November 13, 200, since no reply to the Non-Responsive notice was received within the time period set forth in the August 13, 2008 communication, a Notice of Abandonment was mailed. On November 20, 2009, applicants filed the instant petition.

> 35 U.S.C. 133 provides that:
> Upon failure of the applicant to prosecute the application within six months after any action therein, of which notice has been given or mailed to the applicant, or within such shorter time, not less than thirty days, as fixed by the Director in such action, the application shall be regarded as abandoned by the parties thereto, unless it be shown to the satisfaction of the Director that such delay was unavoidable.
>
> 37 CFR § 1.135 provides that:
> (a) If an applicant of a patent application fails to reply within the time period provided under § 1.134 and § 1.136, the application will become abandoned unless an Office action indicates otherwise.
> (b) Prosecution of an application to save it from abandonment pursuant to paragraph (a) of this section must include such complete and proper reply as the condition of the application may require. The admission of, or refusal to admit, any amendment after final rejection or any amendment not responsive to the last action, or any related proceedings,

will not operate to save the application from abandonment.
(c) When reply by the applicant is a bona fide attempt to advance the application to final action, and is substantially a complete reply to the non-'final Office action, but consideration of some matter or compliance with some requirement has been inadvertently omitted, applicant may be given a new time period for reply under § 1.134 to supply the omission.

37 CFR § 1.181 provides, in part, that:
(f) The mere filing of a petition will not stay any period for reply that may be running against the application, nor act as a stay of other proceedings. Any petition under this part not filed within two months of the mailing date of the action or notice from which relief is requested may be dismissed as untimely, except as otherwise provided. This two-month period is not extendable.

MPEP § 711.02 provides that:
37 CFR 1.135(a) specifies that an application becomes abandoned if applicant "fails to reply" to an office action within the fixed statutory period. This failure may result either from (A) failure to reply within the statutory period, or (B) insufficiency of reply, i.e., failure to file a "complete and proper reply, as the condition of the case may require" within the statutory period (37 CFR 1.135(b)).

In the notice of non-responsive election dated August 13, 2008, the notice states that "Applicant is given 1 month to respond" to the communication. Although not indicated in the notice, applicants' period for response was extendible under 37 CFR § 1.136(a). Since applicants failed to reply within the time period provided under 37 CFR § 1.134 and § 1.136 as provided for under 37 CFR § 1.135 and MPEP § 711.02, the application was properly held to be abandoned. Finally, it should be noted that all issues raised by applicants have been considered. Issues not specifically addressed in the instant decision, while considered, neither address the merits nor change the decision.

For the above stated reasons, the petition under 37 CFR § 1.181, requesting withdrawal of abandonment of the application is DENIED.

Any inquiries regarding this decision should be directed to Quality Assurance Specialist Lanna Mai at (571) 272-6867

Wynn Coggins, Director
Technology Center 3600
(571) 272-5350

LM: 3/2/2011
LM

UNITED STATES PATENT AND TRADEMARK OFFICE

Commissioner for Patents
United States Patent and Trademark Office
P.O. Box 1450
Alexandria, VA 22313-1450
www.uspto.gov

INNOVATION DIVISION
CANTOR FITZGERALD, L.P.
110 EAST 59TH STREET (6TH FLOOR)
NEW YORK NY 10022

MAILED
FEB 27 2012
OFFICE OF PETITIONS

In re Application of
Lee Amaitis, et al.
Application No. 10/446,572
Filed: May 27, 2003
Attorney Docket No. 02-1076

ON PETITION

This is a decision on the petition filed May 4, 2011, captioned "PETITION FROM DECISION OF TECHNOLOGY CENTER DIRECTOR." This petition is being treated under 37 CFR 1.181 requesting that the Director exercise his supervisory authority to review the decision of the Director, Technology Center 3600 (TC Director), dated March 4, 2011.

The petition under 37 CFR 1.181 is **DENIED**[1].

## BACKGROUND

1. The instant application was filed on May 27, 2003.

2. A requirement for restriction was mailed March 18, 2008. The restriction identified three distinct inventions and identified the claims drawn to each invention.

3. A response to the restriction requirement was filed on August 18, 2008.

4. A Notice of Non-Responsive Amendment (Notice) was mailed September 30, 2008. This Notice indicated that applicant had failed to properly elect an invention in the response. filed August 18, 2008. The Notice gave the applicant "a TIME PERIOD OF ONE (1) MONTH OR 30 DAYS from the mailing date of this notice, whichever is longer, to elect an invention detailed in the March 18, 2008, restriction requirement (with or without traverse) in order to avoid ABANDOMENT. Pursuant to 37 CFR 1.136(a)(1), (a)(1)(i), and M.P.E.P. 714.03, NO EXTENSIONS OF TIME MAY BE GIVEN. No further non-responsive amendment notices will be given."

5. A Notice of Abandonment was mailed November 13, 2008.

[1] This decision is a final agency action within the meaning of 5 U.S.C. § 704 for purposes of seeking judicial review. See MPEP 1002.02

6. A petition captioned "PETITION TO VACATE EXAMINER'S PAPERS OF MARCH, SEPTEMBER AND NOVEMBER 2008" was filed January 13, 2009.

7. A petition decision by the TC Director was mailed March 4, 2011 which denied the petition filed January 13, 2009.

8. The instant petition seeking a review of the TC Director's decision was filed May 4, 2011.

## STATUTE AND REGULATIONS

35 U.S.C. § 121 states that:

> If two or more independent and distinct inventions are claimed in one application, the Director may require the application to be restricted to one of the inventions. If the other invention is made the subject of a divisional application which complies with the requirements of section 120 of this title it shall be entitled to the benefit of the filing date of the original application. A patent issuing on an application with respect to which a requirement for restriction under this section has been made, or on an application filed as a result of such a requirement, shall not be used as a reference either in the Patent and Trademark Office or in the courts against a divisional application or against the original application or any patent issued on either of them, if the divisional application is filed before the issuance of the patent on the other application. If a divisional application is directed solely to subject matter described and claimed in the original application as filed, the Director may dispense with signing and execution by the inventor. The validity of a patent shall not be questioned for failure of the Director to require the application to be restricted to one invention.

37 CFR 1.142 states in part that:

> (a) If two or more independent and distinct inventions are claimed in a single application, the examiner in an Office action will require the applicant in the reply to that action to elect an invention to which the claims will be restricted, this official action being called a requirement for restriction (also known as a requirement for division). Such requirement will normally be made before any action on the merits; however, it may be made at any time before final action.

37 CFR 1.143 states that:

> If the applicant disagrees with the requirement for restriction, he may request reconsideration and withdrawal or modification of the requirement, giving the reasons therefor. (See § 1.111). In requesting reconsideration the applicant must indicate a provisional election of one invention for prosecution, which invention

shall be the one elected in the event the requirement becomes final. The requirement for restriction will be reconsidered on such a request. If the requirement is repeated and made final, the examiner will at the same time act on the claims to the invention elected.

37 CFR 1.181 states in part:

(a) Petition may be taken to the Director:

(1) From any action or requirement of any examiner in the ex parte prosecution of an application, or in ex parte or inter partes prosecution of a reexamination proceeding which is not subject to appeal to the Board of Patent Appeals and Interferences or to the court;

(2) In cases in which a statute or the rules specify that the matter is to be determined directly by or reviewed by the Director; and

(3) To invoke the supervisory authority of the Director in appropriate circumstances. For petitions involving action of the Board of Patent Appeals and Interferences, see § 41.3 of this title.

(f) The mere filing of a petition will not stay any period for reply that may be running against the application, nor act as a stay of other proceedings. Any petition under this part not filed within two months of the mailing date of the action or notice from which relief is requested may be dismissed as untimely, except as otherwise provided. This two-month period is not extendable.

(g) The Director may delegate to appropriate Patent and Trademark Office officials the determination of petitions.

5 U.S.C. § 555 states in part that:

(b) A person compelled to appear in person before an agency or representative thereof is entitled to be accompanied, represented, and advised by counsel or, if permitted by the agency, by other qualified representative. A party is entitled to appear in person or by or with counsel or other duly qualified representative in an agency proceeding. So far as the orderly conduct of public business permits, an interested person may appear before an agency or its responsible employees for the presentation, adjustment, or determination of an issue, request, or controversy in a proceeding, whether interlocutory, summary, or otherwise, or in connection with an agency function. With due regard for the convenience and necessity of the parties or their representatives and within a reasonable time, each agency shall proceed to conclude a matter presented to it. This subsection does not grant or deny a person who is not a lawyer the right to appear for or represent others before an agency or in an agency proceeding.

* * * * *

(e) Prompt notice shall be given of the denial in whole or in part of a written application, petition, or other request of an interested person made in connection with any agency proceeding.

**Manual of Patent Examining Procedure (MPEP) - §803(I)**

CRITERIA FOR RESTRICTION BETWEEN PATENTABLY DISTINCT INVENTIONS

There are two criteria for a proper requirement for restriction between patentably distinct inventions:

(A) The inventions must be independent (see MPEP §802.01, §806.06, §808.01) or distinct as claimed (see MPEP §806.05 - §806.05(j)); and

(B) There would be a serious burden on the examiner if restriction is not required (see MPEP §803.02, §808, and §808.02).

## OPINION

As an initial matter, petitioner's request on "the personal attention of Director Kappos himself" in considering the instant petition, or otherwise intervene herein, is **denied**. The Director of USPTO, pursuant to 37 CFR 1.181(g), may delegate the determination of petitions. Decisions on petitions submitted under 37 CFR 1.181, to review any ex parte action or requirement by the examiner that is not subject to appeal have, in the first instance, been delegated to the Group Director, see MPEP 1002.02(c) – 1002.02 (c)(3). Petitions, as herein, which seek to invoke the supervisory authority of the Director of USPTO and review a decision of a Group Director, have been delegated to the Office of Petitions in the Office of the Associate Commissioner for Patent Examination Policy. See MPEP 1002.02(b).

A party to a proceeding in the Patent and Trademark Office has a right to petition, and may expect to receive a decision by either the Office official delegated authority to render the decision, or the delegating official. See In re Arnott, 19 USPQ2d 1049, 1052 (Comm'r Pat. 1991). While a higher level official, at the request of the party, may further review a decision rendered pursuant to delegated authority, such review is a matter which lies within the sound discretion of that higher level official, and is not a matter of right. Id.

Rather, a decision rendered pursuant to delegated authority will not be reviewed by a higher level official except in unusual or exceptional circumstances. See In re Staeger, 189 USPQ 284 (Comm'r Pat. 1984). That petitioner does not agree with the decision of the Group Director does not adequately demonstrate that such unusual or exceptional circumstances are present herein. Id. at 285.

On March 18, 2008, the examiner issued a restriction requirement under 37 CFR 1.142, indicating three inventions, and advising the applicant that for the reply to the requirement to be

deemed complete, it must include "(i) an election of a invention to be examined even though the requirement may be traversed (37 CFR 1.143) and (ii) identification of the claims encompassing the elected invention." Applicant filed a reply to the restriction requirement on August 18, 2008 along with a request for four (4) months of extension of time. This reply to the restriction requirement did not provide a proper election. Accordingly, the examiner mailed a Notice on September 30, 2008 indicating to applicant that the election was not proper and gave applicant one month to properly respond to the restriction requirement. Applicant failed to respond to the Notice in a timely manner and the application went abandoned on October 31, 2008 for failure to respond to the Notice. A Notice of Abandonment was mailed November 13, 2008.

37 CFR 1.143 provides that *"[i]f applicant disagrees with a requirement for restriction, he may request reconsideration and withdrawal or modification of the requirement, giving the reasons therefor"* and applicant "***must*** *provisionally elect one of the inventions for prosecution in the request for reconsideration.*" Emphasis added.

Applicant's response to the restriction requirement filed August 18, 2008 argued that "[t]he Office Action is too procedurally flawed to raise any requirement, and omits so many essential showings that Applicant is unable to make an informed or binding election." Petitioner further states "[a]pplicant concedes that groups I and II are distinct (criterion (1) of MPEP § 803), but traverses under criterion (2)." In the citation from the MPEP pertaining to "criterion (2)", petitioner has changed the wording in the MPEP. Under the criterion 803(I)(B) of the MPEP ("Criterion (2)" as referred to by the petitioner), for the requirement of restriction to be proper, there **would** be a serious burden on the examiner if restriction was not required. In responding to that argument, as stated by the examiner in the Notice, with respect to the three distinct inventions that were identified in the Notice, "that creating an index, head-to-head trading, and adjusting criterion for success of an option trade all require different search queries even though the three are classified together. Therefore, a serious search burden on the examiner exist[s] if restriction is not required." Applicant did not respond to the Notice and the application was properly abandoned.

In requesting a "reversal" of TC Director's decision, petitioner is seeking "vacatur (not withdrawal, ***vacatur*** under MPEP § 711.03(c)) of the Examiner's papers of March 18, 2008, September 2008, and November 2008, because these papers were issued outside the authority of the Office or the Examiner, and statute provides that Applicant' s response was fully adequate."

The TC Director's decision of March 4, 2011 in regard to the abandonment of this application has been reviewed and no error discovered in this decision.

Petitioner disagrees with the TC Director's decision because the decision did not vacate the April 25, 2007 memorandum. 37 CFR 1.181 provides for review of actions or requirements of an examiner in the *ex parte* prosecution of an application, and is not a forum for general complaints about USPTO practices or procedures. The April 25, 2007 memorandum is not an action or requirement made in the instant application. The withdrawal of the restriction requirement

(rather than vacatur) is likewise not an action or requirement made in the instant application.[2] In any event, petitioner's request that the examiner's restriction requirement be vacated is not granted because 37 CFR 1.143 only provides that applicant may request for reconsideration and withdrawal or modification of a restriction requirement. Accordingly, the TC Director's decision addressed all the relevant issues related to actions taken or requirements made in the instant application that were presented in the petition under 37 CFR 1.181 filed on January 13, 2009, and is thus in compliance with 5 U.S.C. § 555(b) and (e).

Petitioner indicates the TC Director's decision referenced "withdrawal" of abandonment whereas petitioner requested the abandonment be "vacated". As review of the Technology Center Director's decision shows that the abandonment of the instant application was proper, neither the restriction requirement nor notice of abandonment will be withdrawn or vacated.

Petitioner should note that any review of issues raised in the petition filed in the application serial number 10/147,218 will be addressed in a decision on the petition filed therein. For the sake of completeness and to the extent necessary, the decision on the similar petition filed in application serial number 10/147,218 is incorporated herein by reference.

Petitioner's arguments in relation to the non-extendable time period of 1 month or 30 days set for reply in the examiner's action of September 30, 2008 have been considered. In section 714.03 of the MPEP, it is stated that the practice set forth in 37 CFR 1.135(c) does not apply to a situation "where there has been a deliberate omission of some necessary part of a complete reply; rather, 37 CFR 1.135(c) is applicable only when the missing matter or lack of compliance is considered by the examiner as being "inadvertently omitted." For example, if an election of species has been required and applicant does not make an election because he or she believes the requirement to be improper, the amendment on its face is not a "bona fide attempt to advance the application to final action" (37 CFR 1.135(c)), and the examiner is without authority to postpone decision as to abandonment." In this instance, the extendable time period for responding to the Restriction requirement would have expired on September 18, 2008. As the reply filed August 18, 2008 was not a bona fide attempt to advance the application to a final Office action, examiner was not bound by 37 CFR 1.135 in providing a further extendable period of reply.

Petitioner also raises issues under the Paperwork Reduction Act of 1995, 44 U.S.C. § 3501 et seq. (Paperwork Reduction Act). The collection of information pertaining to the filing of applications has been reviewed and approved by OMB under control number 0651-0032 and the collection of information pertaining to replies to Office action up to allowance of an application has been reviewed and approved by OMB under control number 0651-0031. The collection of information at issue (the election by an applicant in reply to a requirement for restriction by the examiner) has been reviewed and approved by OMB under control number 0651-0031. The public protection provision of the Paperwork Reduction Act provides in part that: "no person shall be subject to any penalty for failing to comply with a collection of information that is

[2] Any patent term adjustment under 35 U.S.C. § 154(b) will be indicated on the notice of allowance if the Office subsequently allows the instant application after an examination on the merits. See 37 CFR 1.705. Any complaint about the patent term adjustment indicated on any notice of allowance that issues in the instant application must be presented in compliance with 37 CFR 1.705(b) after the Office issues a notice of allowance in this application.

subject to this subchapter if- (1) the collection of information does not display a valid control number assigned by the Director in accordance with this subchapter; or (2) the agency fails to inform the person who is to respond to the collection of information that such person is not required to respond to the collection of information unless it displays a valid control number." *See* 44 U.S.C. § 3512(a). Thus, the Paperwork Reduction Act does not create private right of action, but is only defense to enforcement actions. See Ass'n of Am. Physicians & Surgs. v. United States HHS, 224 F. Supp. 2d 1115, 1128 (S.D.Tex. 2002). The information required by the public protection provision of the Paperwork Reduction Act is provided on the transmittal form the USPTO provides (form PTO/SB/21) for any reply to an Office action.

Petitioner argues that the TC Director's decision did not rule on petitioner's request that the PTO comply with the OMB's Good Guidance Practices directive. Section 11 of Executive order 12866 expressly indicates that: "[t]his Executive order is intended only to improve the internal management of the Federal Government and does not create any right or benefit, substantive or procedural, enforceable at law or equity, against the United States, its agencies or instrumentalities, its officers or employees, or any other person." See Executive Order 12866 of September 30, 1993; Regulatory Planning and Review, 58 Fed. Reg. 51735 (Oct. 4, 1993). The Bulletin on Good Guidance Practice is a bulletin issued by OMB in a Federal Register notice entitled Final Bulletin for Agency Good Guidance Practices, published at 72 Fed. Reg. 3432 (Jan. 25, 2007). Similar to Executive order 12866, the Final Bulletin for Agency Good Guidance Practices expressly indicates that: "[t]his Bulletin is intended to improve the internal management of the Executive Branch and is not intended to, and does not, create any right or benefit, substantive or procedural, enforceable at law or equity, against the United States, its agencies, or other entities, its officers or employees, or any other person." See Final Bulletin for Agency Good Guidance Practices, 72 Fed. Reg. at 3440. Any person may bring issues of alleged non-compliance on the part of the USPTO with Executive order 12866 or the Final Bulletin for Agency Good Guidance Practices to the attention of the Department of Commerce or the Office of Management and Budget; however, petitioners' issues concerning compliance or non-compliance with Executive order 12866 or the Final Bulletin for Agency Good Guidance Practices do not provide a basis for setting aside or otherwise disturbing the Technology Center Director's decision in the above-identified application. See, e.g., Teledyne, Inc. v. United States, 50 Fed. Cir. 155, 190 (Fed. Cir. 2001) (plaintiff cannot rely upon an Executive order that, by its plain terms, precludes judicial review of an agency's compliance with its directive as a basis for challenging agency action).

Finally, the rules of practice (37 CFR 1.181(e)) provide that an oral hearing will not be granted except when considered necessary by the Director. The USPTO has a well established policy of deciding petitions solely on the basis of the written record. See In re application of Koppolu, 2002 Comm'r Pat. LEXIS 4, at *12-13 (Comm'r Pat. 2002). Since there is nothing that can be brought to the attention of the USPTO during an interview or hearing that is not more properly brought to the attention of the USPTO in writing in this situation, pursuant to 37 CFR 1.2, the circumstances at issue do not present a circumstance necessitating an interview. Indeed, a review of the instant petition indicates that there is nothing so unusual or extraordinary in this case warranting an interview.

## CONCLUSION

The petition is granted to the extent that the decision of the TC Director of March 4, 2011 has been reviewed; however, the petition is **denied** with respect to making any changes to or otherwise disturbing the TC Director's decision of March 4, 2011.

The address listed on the petition differs from the correspondence address of record. While a courtesy copy of this decision is being mailed to the person signing the petition at the address listed on the petition, all future correspondence will be directed to the address currently of record until appropriate instructions are received.

Andrew H. Hirshfeld
Associate Commissioner for
Patent Examination Policy

cc: David E. Boundy
BGC Partners, Inc.
110 East 59th St.
New York, NY 10022

PTO/SB/131 (01-10)
Approved for use through 02/28/2011. OMB 0651-0020
U.S. Patent and Trademark Office; U. S. DEPARTMENT OF COMMERCE
Under the Paperwork Reduction Act of 1995, no persons are required to respond to a collection of information unless it displays a valid OMB control number.

# REQUEST FOR RECALCULATION OF PATENT TERM ADJUSTMENT IN VIEW OF *WYETH**

| | |
|---|---|
| Attorney Docket Number: 042390.P11527C2 | Patent Number: 7,668,147 |
| Filing Date (or 371(b) or (f) Date): 05-27-2003 | Issue Date: 02-23-2010 |
| First Named Inventor: Charles L. Lindsay | |
| Title: COMMUNICATION SYSTEM WITH FAST CONTROL TRAFFIC | |

PATENTEE HEREBY REQUESTS RECALCULATION OF THE PATENT TERM ADJUSTMENT (PTA) UNDER 35 USC 154(b) INDICATED ON THE ABOVE-IDENTIFIED PATENT. THE PATENTEE'S SOLE BASIS FOR REQUESTING THE RECALCULATION IS THE USPTO'S PRE-*WYETH* INTERPRETATION OF 35 U.S.C. 154(b)(2)(A).

Note: This form is only for requesting a recalculation of PTA for patents issued before March 2, 2010, if the sole basis for requesting the recalculation is the USPTO's pre-*Wyeth* interpretation of 35 U.S.C. 154(b)(2)(A). See Instruction Sheet on page 2 for more information.

Patentees are reminded that to preserve the right to review in the United States District Court for the District of Columbia of the USPTO's patent term adjustment determination, a patentee must ensure that he or she also takes the steps required under 35 U.S.C. 154(b)(3) and (b)(4) and 37 CFR 1.705 in a timely manner.

**Wyeth v. Kappos*, No. 2009-1120 (Fed. Cir., Jan. 7, 2010).

| | |
|---|---|
| Signature /Stuart A. Whittington/ | Date July 9, 2010 |
| Name (Print/Typed) Stuart A. Whittington | Registration Number 45,215 |

***Note**: Signatures of all the inventors or assignees of record of the entire interest or their representative(s) are required in accordance with 37 CFR 1.33 and 11.18. Please see 37 CFR 1.4(d) for the form of the signature. If necessary, submit multiple forms for more than one signature, see below**.*

☐ *Total of _____ forms are submitted.

The information is required to obtain or retain a benefit by the public which is to file (and by the USPTO to process) an application. Confidentiality is governed by 35 U.S.C. 122 and 37 CFR 1.11 and 1.14. This collection is estimated to take 12 hours to complete, including gathering, preparing, and submitting the completed application form to the USPTO. Time will vary depending upon the individual case. Any comments on the amount of time you require to complete this form and/or suggestions for reducing this burden, should be sent to the Chief Information Officer, U.S. Patent and Trademark Office, U.S. Department of Commerce, P.O. Box 1450, Alexandria, VA 22313-1450. DO NOT SEND FEES OR COMPLETED FORMS TO THIS ADDRESS. **SEND TO: Commissioner for Patents, P.O. Box 1450, Alexandria, VA 22313-1450.**

*If you need assistance in completing the form, call 1-800-PTO-9199 and select option 2.*

PTO/SB/131 (01-10)
Approved for use through 02/28/2011. OMB 0651-0020
U.S. Patent and Trademark Office; U. S. DEPARTMENT OF COMMERCE
Under the Paperwork Reduction Act of 1995, no persons are required to respond to a collection of information unless it displays a valid OMB control number.

# Instruction Sheet for: REQUEST FOR RECALCULATION OF PATENT TERM ADJUSTMENT IN VIEW OF *WYETH**

(Not to be Submitted to the USPTO)

**This form is only for requesting a recalculation of PTA for patents issued before March 2, 2010, if the sole basis for requesting the recalculation is the USPTO's pre-*Wyeth* interpretation of 35 U.S.C. 154(b)(2)(A).**

**This form must be filed within 180 days of the day the patent was granted,** with the following exception:

> Patentees who received a decision from the USPTO under the USPTO's pre-Wyeth interpretation of 35 U.S.C. 154(b)(2)(A) may file a request for reconsideration of that decision if such a request for reconsideration is filed within **two months** of the date of the decision (37 CFR 1.181(f)). If the patentee's sole basis for requesting reconsideration of the decision is the USPTO's pre-Wyeth interpretation of 35 U.S.C. 154(b)(2)(A), the request for reconsideration need only state that reconsideration is being requested in view of Wyeth (this form may be used for this purpose if it is filed within **two months** of the date of the decision from the USPTO).

**Do not use this form if the application has been allowed, but not yet issued as a patent.**

1. **For patents issued before March 2, 2010:** A request for reconsideration under 37 CFR 1.705(d) and the fee set forth in 37 CFR 1.18(e) are not required, provided that the patentee's sole basis for requesting recalculation of the PTA in the patent is the USPTO's pre-*Wyeth* interpretation of 35 U.S.C. 154(b)(2)(A) and this form is filed within 180 days of the day the patent was granted.

2. **For patents issued on or after March 2, 2010 (do not use this form):** Patentees seeking a revised PTA in a patent issued on or after March 2, 2010, must file a request for reconsideration under 37 CFR 1.705(d) that complies with the requirements of 37 CFR 1.705(b)(1) and (b)(2) within two months of the day the patent issued.

For more information, see "Notice Concerning Calculation of the Patent Term Adjustment With Respect to the Overlapping Delay Provision of 35 U.S.C. 154(b)(2)(A)" available on the USPTO Web site at http://www.uspto.gov/patents/law/notices/2010.jsp.

**Wyeth v. Kappos*, No. 2009-1120 (Fed. Cir., Jan. 7, 2010).

# Privacy Act Statement

The **Privacy Act of 1974 (P.L. 93-579)** requires that you be given certain information in connection with your submission of the attached form related to a patent application or patent. Accordingly, pursuant to the requirements of the Act, please be advised that: (1) the general authority for the collection of this information is 35 U.S.C. 2(b)(2); (2) furnishing of the information solicited is voluntary; and (3) the principal purpose for which the information is used by the U.S. Patent and Trademark Office is to process and/or examine your submission related to a patent application or patent. If you do not furnish the requested information, the U.S. Patent and Trademark Office may not be able to process and/or examine your submission, which may result in termination of proceedings or abandonment of the application or expiration of the patent.

The information provided by you in this form will be subject to the following routine uses:

1. The information on this form will be treated confidentially to the extent allowed under the Freedom of Information Act (5 U.S.C. 552) and the Privacy Act (5 U.S.C 552a). Records from this system of records may be disclosed to the Department of Justice to determine whether disclosure of these records is required by the Freedom of Information Act.
2. A record from this system of records may be disclosed, as a routine use, in the course of presenting evidence to a court, magistrate, or administrative tribunal, including disclosures to opposing counsel in the course of settlement negotiations.
3. A record in this system of records may be disclosed, as a routine use, to a Member of Congress submitting a request involving an individual, to whom the record pertains, when the individual has requested assistance from the Member with respect to the subject matter of the record.
4. A record in this system of records may be disclosed, as a routine use, to a contractor of the Agency having need for the information in order to perform a contract. Recipients of information shall be required to comply with the requirements of the Privacy Act of 1974, as amended, pursuant to 5 U.S.C. 552a(m).
5. A record related to an International Application filed under the Patent Cooperation Treaty in this system of records may be disclosed, as a routine use, to the International Bureau of the World Intellectual Property Organization, pursuant to the Patent Cooperation Treaty.
6. A record in this system of records may be disclosed, as a routine use, to another federal agency for purposes of National Security review (35 U.S.C. 181) and for review pursuant to the Atomic Energy Act (42 U.S.C. 218(c)).
7. A record from this system of records may be disclosed, as a routine use, to the Administrator, General Services, or his/her designee, during an inspection of records conducted by GSA as part of that agency's responsibility to recommend improvements in records management practices and programs, under authority of 44 U.S.C. 2904 and 2906. Such disclosure shall be made in accordance with the GSA regulations governing inspection of records for this purpose, and any other relevant (*i.e.*, GSA or Commerce) directive. Such disclosure shall not be used to make determinations about individuals.
8. A record from this system of records may be disclosed, as a routine use, to the public after either publication of the application pursuant to 35 U.S.C. 122(b) or issuance of a patent pursuant to 35 U.S.C. 151. Further, a record may be disclosed, subject to the limitations of 37 CFR 1.14, as a routine use, to the public if the record was filed in an application which became abandoned or in which the proceedings were terminated and which application is referenced by either a published application, an application open to public inspection or an issued patent.
9. A record from this system of records may be disclosed, as a routine use, to a Federal, State, or local law enforcement agency, if the USPTO becomes aware of a violation or potential violation of law or regulation.

UNITED STATES PATENT AND TRADEMARK OFFICE

UNITED STATES DEPARTMENT OF COMMERCE
United States Patent and Trademark Office
Address: COMMISSIONER FOR PATENTS
P.O. Box 1450
Alexandria, Virginia 22313-1450
www.uspto.gov

INTEL/BSTZ
BLAKELY SOKOLOFF TAYLOR & ZAFMAN LLP
1279 OAKMEAD PARKWAY
SUNNYVALE, CA 94085-4040

Mail Date: 09/13/2010

| | | |
|---|---|---|
| **Applicant** | : Charles L. Lindsay | : DECISION ON REQUEST FOR |
| **Patent Number** | : 7668147 | : RECALCULATION of PATENT |
| **Issue Date** | : 02/23/2010 | : TERM ADJUSTMENT IN VIEW |
| **Application No** | : 10/446,609 | : OF WYETH AND NOTICE OF INTENT TO |
| **Filed** | : 05/27/2003 | : ISSUE CERTIFICATE OF CORRECTION |
| | | : |

The Request for Recalculation is **GRANTED** to the extent indicated.

The patent term adjustment has been determined to be **1910** days. The USPTO will *sua sponte* issue a certificate of correction reflecting the amount of PTA days determined by the recalculation.

Prior to the issuance of the certificate of correction, the USPTO will afford patentee an opportunity to be heard and request reconsideration. Accordingly, patentee has **one month or thirty (30) days**, whichever is longer, to file a request for reconsideration of this patent term adjustment calculation. See 35 U.S.C. 154(b)(3)(B)(ii) and 37 CFR 1.322(a)(4). No extensions of time will be granted under 37 CFR 1.136.

Patentee should use document code PET.OP if electronically filing a request for reconsideration of this patent term adjustment calculation. The patentee must also include the information required by 37 CFR 1.705(b)(2) and the fee required by 37 CFR 1.18(e). If patentee does not file a timely request for reconsideration of this patent term adjustment calculation including the information required by 37 CFR 1.705(b)(2) and the fee required by 37 CFR 1.18(e), the USPTO will issue a certificate of correction reflecting the PTA determination noted above.

Patentee should be aware that in order to preserve the right to review in the United States District Court for the District of Columbia of the USPTO patent term adjustment determination, patentee must ensure that he or she also take the steps required under 35 U.S.C. 154(b)(4)(A) in a timely manner. Nothing in the request for recalculation should be construed as providing an alternative time frame for commencing a civil action under 35 U.S.C. 154(b)(4)(A).

Any questions concerning this decision should be directed to the Office of Patent Legal Administration at 571-272-7702.

UNITED STATES PATENT AND TRADEMARK OFFICE

Commissioner for Patents
United States Patent and Trademark Office
P.O. Box 1450
Alexandria, VA 22313-1450
www.uspto.gov

FAY, KAPLIN & MARCIN, LLP
150 BROADWAY
SUITE 750
NEW YORK, NY 10038

MAILED
AUG 10 2010
OFFICE OF PETITIONS

In re Application of
James T. Barry, et al.
Application No. 10/446,614
Filed: May 28, 2003
Attorney Docket No. 40125/00401

ON PETITION

This is a decision on the petition under the unintentional provisions of 37 CFR 1.137(b), filed March 20, 2007, to revive the above-identified application.

The petition is **DISMISSED**.

The application became abandoned for failure to reply in a timely manner to the non-final Office action mailed, November 16, 2005, which set a shortened statutory period for reply of three (3) months. No extensions of time under the provisions of 37 CFR 1.136(a) were obtained. Accordingly, the application became abandoned on February 17, 2006.

A grantable petition under 37 CFR 1.137(b) must be accompanied by: (1) the required reply, unless previously filed; (2) the petition fee as set forth in 37 CFR 1.17(m); (3) a statement that the entire delay in filing the required reply from the due date for the reply until the filing of a grantable petition pursuant to 37 CFR 1.137(b) was unintentional; and (4) any terminal disclaimer (and fee as set forth in 37 CFR 1.20(d)) required by 37 CFR 1.137(d). Where there is a question as to whether either the abandonment or the delay in filing a petition under 37 CFR 1.137 was unintentional, the Director may require additional information. See MPEP 711.03(c)(III)(C) and (D). The instant petition lacks item(s) (4).

Petition does not state "since this utility/plant application was filed on or after June 8, 1995, no terminal disclaimer is required". A blank copy of the Petition for Revival of an Application for Patent Abandoned Unintentionally under 37 CFR 1.137(b) is attached.

Any request for reconsideration of this decision must be submitted within **TWO (2) MONTHS** from the mail date of this decision. Extensions of time under 37 CFR 1.136(a) are permitted.

The reconsideration request should include a cover letter entitled "Renewed Petition under 37 CFR 1.137(b)." This is **not** a final agency action within the meaning of 5 U.S.C. § 704.

Further correspondence with respect to this matter should be addressed as follows:

By Mail: Mail Stop PETITION
Commissioner for Patents
P. O. Box 1450
Alexandria, VA 22313-1450

By hand: U. S. Patent and Trademark Office
Customer Service Window, Mail Stop Petitions
Randolph Building
401 Dulany Street
Alexandria, VA 22314

The centralized facsimile number is **(571) 273-8300.**

Telephone inquiries concerning this decision should be directed to the undersigned at (571) 272-1642.

April M. Wise
Petitions Examiner
Office of Petitions

Attachment: A blank copy of the Petition for Revival of an Application for Patent Abandoned Unintentionally under 37 CFR 1.137(b).

UNITED STATES PATENT AND TRADEMARK OFFICE

Commissioner for Patents
United States Patent and Trademark Office
P.O. Box 1450
Alexandria, VA 22313-1450
www.uspto.gov

FAY, KAPLIN & MARCIN, LLP
150 BROADWAY
SUITE 750
NEW YORK, NY 10038

MAILED

SEP 2 8 2010

OFFICE OF PETITIONS

In re Application of
James T. Barry, et al.
Application No. 10/446,614
Filed: May 28, 2003
Attorney Docket No. 40125/00401

DECISION ON PETITION

This is a decision on the renewed petition under the unintentional provisions of 37 CFR 1.137(b), filed August 27, 2010, to revive the above-identified application.

The application became abandoned for failure to reply in a timely manner to the non-final Office action mailed, November 16, 2005, which set a shortened statutory period for reply of three (3) months. No extensions of time under the provisions of 37 CFR 1.136(a) were obtained. Accordingly, the application became abandoned on February 17, 2006.

The petition satisfies the requirements of 37 CFR 1.137(b) in that petitioner has supplied (1) the reply in the form of an amendment, (2) the petition fee of $750, and (3) a proper statement of unintentional delay.

In view of the above, the petition is **GRANTED**.

Telephone inquiries concerning this decision should be directed to undersigned at (571) 272-1642. All other inquiries concerning the examination or status of this application should be directed to the Technology Center.

This application is being referred to Technology Center AU 3661 for appropriate action by the Examiner in the normal course of business on the reply received August 27, 2010.

April M. Wise
Petitions Examiner
Office of Petitions

UNITED STATES PATENT AND TRADEMARK OFFICE

Commissioner for Patents
United States Patent and Trademark Office
P.O. Box 1450
Alexandria, VA 22313-1450
www.uspto.gov

Decision Date : May 9,2011

In re Application of :

Richard Fitzpatrick

Application No : 10447038

Filed : 27-May-2003

Attorney Docket No : GDRMF01L

DECISION ON PETITION

UNDER CFR 1.137(b)

This is an electronic decision on the petition under 37 CFR 1.137(b), filed May 9,2011 , to revive the above-identified application.

The petition is **GRANTED.**

The above-identified application became abandoned for failure to reply in a timely manner to the Notice of Allowance and Issue Fee(s) Due. The date of abandonment is the day after the expiration date of the period set for reply in the Notice.

The electronic petition satisfies the conditions for revival pursuant to the provisions of 37 CFR 1.137(b) in that (1) the reply in the form of payment of the Issue Fee and the Publication Fee (if necessary); (2) the petition fee as set forth in 37 CFR 1.17 (m); (3) the drawing correction and/or other deficiencies (if necessary); and (4) the required statement of unintentional delay have been received. Accordingly, the Issue Fee payment is accepted as having been unintentionally delayed.

Telephone inquiries concerning this decision should be directed to the Patent Electronic Business Center (EBC) at 866-217-9197.

This application file is being directed to the Office of Patent Publication.

Office of Petitions

| Doc Code: PET.AUTO<br>Document Description: Petition automatically granted by EFS-Web | PTO/SB/64<br>U.S. Patent and Trademark Office<br>Department of Commerce |
|---|---|

| | |
|---|---|
| Electronic Petition Request | PETITION FOR REVIVAL OF AN APPLICATION FOR PATENT ABANDONED UNINTENTIONALLY UNDER 37 CFR 1.137(b) |
| Application Number | 10447038 |
| Filing Date | 27-May-2003 |
| First Named Inventor | Richard Fitzpatrick |
| Art Unit | 3641 |
| Examiner Name | JOHN RICHARDSON |
| Attorney Docket Number | GDRMF01L |
| Title | MODULAR GUNSTOCK |

The above-identified application became abandoned for failure to file a timely and proper reply to a notice or action by the United States Patent and Trademark Office. The date of abandonment is the day after the expiration date of the period set for reply in the office notice or action plus any extensions of time actually obtained.

APPLICANT HEREBY PETITIONS FOR REVIVAL OF THIS APPLICATION

NOTE: A grantable petition requires the following items:
(1) Petition fee;
(2) Reply and/or issue fee;
(3) Terminal disclaimer with disclaimer fee – required for all utility and plant applications filed before June 8, 1995; and for all design applications;
(4) Statement that the entire delay was unintentional.

Petition fee
The petition fee under 37CFR 1.17(m) is attached.

☐ Applicant claims SMALL ENTITY status. See 37 CFR 1.27.

☐ Applicant is no longer claiming SMALL ENTITY status. See 37 CFR 1.27(g)(2).

☒ Applicant(s) status remains as SMALL ENTITY.

☐ Applicant(s) status remains as other than SMALL ENTITY.

**Issue Fee and Publication Fee :**

Issue Fee and Publication Fee must accompany ePetition.

☒ Issue Fee Transmittal is attached

**Drawing corrections and/ or other deficiencies.**

- (●) Drawing corrections and/ or other deficiencies are not required
- ( ) I certify, in accordance with 37 CFR 1.4.(D)(4), that drawing corrections and/ or other deficiencies have previously been filed on
- ( ) Drawing corrections and/ or other deficiencies are attached.
- [x] STATEMENT: The entire delay in filing the required reply from the due date for the required reply until the filing of a grantable petition under 37 CFR 1.137(b) was unintentional.

THIS PORTION MUST BE COMPLETED BY THE SIGNATORY OR SIGNATORIES

I certify, in accordance with 37 CFR 1.4(d)(4) that I am:

- (●) An attorney or agent registered to practice before the Patent and Trademark Office who has been given power of attorney in this application.
- ( ) An attorney or agent registered to practice before the Patent and Trademark Office, acting in a representative capacity.
- ( ) A sole inventor
- ( ) A joint inventor; I certify that I am authorized to sign this submission on behalf of all of the inventors.
- ( ) A joint inventor; all of whom are signing this e-petition.
- ( ) The assignee of record of the entire interest that has properly made itself of record pursuant to 37 CFR 3.71.

| | |
|---|---|
| Signature | /GEDobbinEsq/ |
| Name | Geoffrey E. Dobbin |
| Registration Number | 42490 |

UNITED STATES PATENT AND TRADEMARK OFFICE

Commissioner for Patents
United States Patent and Trademark Office
P.O. Box 1450
Alexandria, VA 22313-1450
www.uspto.gov

In re Patent No. 7297553
Issue Date: November 20,2007
Application No. 10447073
Filed: May 28,2003
Attorney Docket No. 02-334-A

:
:DECISION GRANTING PETITION
:UNDER 37 CFR 1.378(c)
:

This is a decision on the electronic petition, filed January 10,2012 ,under 37 CFR 1.378(c) to accept the unintentionally delayed payment of the 3.5 year maintenance fee for the above-identified patent.

The petition is **GRANTED**.

The maintenance fee is accepted, and the above-identified patent reinstated as of January 10,2012 .
This decision also constitutes notice that the fee has been accepted. An electronic copy of the petition and this decision has been created as an entry in the Image File Wrapper. Nevertheless, petitioner should print and retain an independent copy.

Telephone inquiries related to this electronic decision should be directed to the Electronic Business Center at 1-866-217-9197.

PTO/SB/66 (03-09)
Approved for use through 03/31/2012. OMB 0651-0016
U.S. Patent and Trademark Office: U.S. DEPARTMENT OF COMMERCE
Under the Paperwork Reduction Act of 1995, no persons are required to respond to a collection of information unless it displays valid OMB control number.

# PETITION TO ACCEPT UNINTENTIONALLY DELAYED PAYMENT OF MAINTENANCE FEE IN AN EXPIRED PATENT (37 CFR 1.378(c))

| Patent Number | Issue Date (YYYY-MM-DD) | Application Number | Filing Date (YYYY-MM-DD) | Docket Number (if applicable) |
|---|---|---|---|---|
| 7297553 | 2007-11-20 | 10/447,073 | 2003-05-28 | 02-334-A |

CAUTION: Maintenance fee (and surcharge, if any) payment must correctly identify: (1) the patent number and (2) the application number of the actual U.S. application leading to issuance of that patent to ensure the fee(s) is/are associated with the correct patent. 37 CFR 1.366(c) and (d).

SMALL ENTITY
☒ Patentee claims, or has previously claimed, small entity status. See 37 CFR 1.27.

LOSS OF ENTITLEMENT TO SMALL ENTITY STATUS
☐ Patentee is no longer entitled to small entity status. See 37 CFR 1.27(g)

| NOT Small Entity | | Small Entity | |
|---|---|---|---|
| Fee | Code | Fee | Code |
| ○ 3 ½ year | (1551) | ● 3 ½ year | (2551) |
| ○ 7 ½ year | (1552) | ○ 7 ½ year | (2552) |
| ○ 11 ½ year | (1553) | ○ 11 ½ year | (2553) |

SURCHARGE
The surcharge required by 37 CFR 1.20(i)(2) (Fee Code 1558) must be paid as a condition of accepting unintentionally delayed payment of the maintenance fee.

MAINTENANCE FEE (37 CFR 1.20(e)-(g))
The appropriate maintenance fee must be submitted with this petition.

STATEMENT
THE UNDERSIGNED CERTIFIES THAT THE DELAY IN PAYMENT OF THE MAINTENANCE FEE TO THIS PATENT WAS UNINTENTIONAL

PETITIONER(S) REQUEST THAT THE DELAYED PAYMENT OF THE MAINTENANCE FEE BE ACCEPTED AND THE PATENT REINSTATED

THIS PORTION MUST BE COMPLETED BY THE SIGNATORY OR SIGNATORIES

37 CFR 1.378(d) states: "Any petition under this section must be signed by an attorney or agent registered to practice before the Patent and Trademark Office, or by the patentee, the assignee, or other party in interest."

I certify, in accordance with 37 CFR 1.4(d)(4) that I am

- ● An attorney or agent registered to practice before the Patent and Trademark Office
- ○ A sole patentee
- ○ A joint patentee; I certify that I am authorized to sign this submission on behalf of all the other patentees.
- ○ A joint patentee; all of whom are signing this e-petition
- ○ The assignee of record of the entire interest

Under the Paperwork Reduction Act of 1995, no persons are required to respond to a collection of information unless it displays valid OMB control number.

| Patent Practitioner | | | |
|---|---|---|---|
| A signature of the applicant or representative is required in accordance with 37 CFR 1.33 and 10.18. Please see 37 CFR 1.4(d) for the form of the signature | | | |
| Signature | /Gregory Pletta/ | Date (YYYY-MM-DD) | 2012-01-10 |
| Name | Gregory Pletta | Registration Number | 47864 |

This collection of information is required by 37 CFR 1.378(c). The information is required to obtain or retain a benefit by the public which is to file (and by the USPTO to process) an application. Confidentiality is governed by 35 U.S.C. 122 and 37 CFR 1.11 and 1.14. This collection is estimated to take 1 hour to complete, including gathering, preparing, and submitting the completed application form to the USPTO. Time will vary depending upon the individual case. Any comments on the amount of time you require to complete this form and/ or suggestions for reducing this burden, should be sent to the Chief Information Officer, U.S. Patent and Trademark Office, U.S. Department of Commerce, P.O. Box 1450, Alexandria, VA 22313-1450. DO NOT SEND FEES OR COMPLETED FORMS TO THIS ADDRESS. **This form can only be used when in conjunction with EFS-Web. If this form is mailed to the USPTO, it may cause delays in reinstating the patent.**

# Privacy Act Statement

The Privacy Act of 1974 (P.L. 93-579) requires that you be given certain information in connection with your submission of the attached form related to a patent application or patent. Accordingly, pursuant to the requirements of the Act, please be advised that: (1) the general authority for the collection of this information is 35 U.S.C. 2(b)(2); (2) furnishing of the information solicited is voluntary; and (3) the principal purpose for which the information is used by the U.S. Patent and Trademark Office is to process and/or examine your submission related to a patent application or patent. If you do not furnish the requested information, the U.S. Patent and Trademark Office may not be able to process and/or examine your submission, which may result in termination of proceedings or abandonment of the application or expiration of the patent.

The information provided by you in this form will be subject to the following routine uses:

1. The information on this form will be treated confidentially to the extent allowed under the Freedom of Information Act (5 U.S.C. 552) and the Privacy Act (5 U.S.C. 552a). Records from this system of records may be disclosed to the Department of Justice to determine whether the Freedom of Information Act requires disclosure of these records.

2. A record from this system of records may be disclosed, as a routine use, in the course of presenting evidence to a court, magistrate, or administrative tribunal, including disclosures to opposing counsel in the course of settlement negotiations.

3. A record in this system of records may be disclosed, as a routine use, to a Member of Congress submitting a request involving an individual, to whom the record pertains, when the individual has requested assistance from the Member with respect to the subject matter of the record.

4. A record in this system of records may be disclosed, as a routine use, to a contractor of the Agency having need for the information in order to perform a contract. Recipients of information shall be required to comply with the requirements of the Privacy Act of 1974, as amended, pursuant to 5 U.S.C. 552a(m).

5. A record related to an International Application filed under the Patent Cooperation Treaty in this system of records may be disclosed, as a routine use, to the International Bureau of the World Intellectual Property Organization, pursuant to the Patent Cooperation Treaty.

6. A record in this system of records may be disclosed, as a routine use, to another federal agency for purposes of National Security review (35 U.S.C. 181) and for review pursuant to the Atomic Energy Act (42 U.S.C. 218(c)).

7. A record from this system of records may be disclosed, as a routine use, to the Administrator, General Services, or his/her designee, during an inspection of records conducted by GSA as part of that agency's responsibility to recommend improvements in records management practices and programs, under authority of 44 U.S.C. 2904 and 2906. Such disclosure shall be made in accordance with the GSA regulations governing inspection of records for this purpose, and any other relevant (i.e., GSA or Commerce) directive. Such disclosure shall not be used to make determinations about individuals.

8. A record from this system of records may be disclosed, as a routine use, to the public after either publication of the application pursuant to 35 U.S.C. 122(b) or issuance of a patent pursuant to 35 U.S.C. 151. Further, a record may be disclosed, subject to the limitations of 37 CFR 1.14, as a routine use, to the public if the record was filed in an application which became abandoned or in which the proceedings were terminated and which application is referenced by either a published application, an application open to public inspections or an issued patent.

9. A record from this system of records may be disclosed, as a routine use, to a Federal, State, or local law enforcement agency, if the USPTO becomes aware of a violation or potential violation of law or regulation.

UNITED STATES PATENT AND TRADEMARK OFFICE

Commissioner for Patents
United States Patent and Trademark Office
P.O. Box 1450
Alexandria, VA 22313-1450
www.uspto.gov

TEXAS INSTRUMENTS INCORPORATED
P O BOX 655474, M/S 3999
DALLAS TX 75265

**MAILED**

NOV 18 2010

**OFFICE OF PETITIONS**

| | | |
|---|---|---|
| In re Application of | : | |
| SHEN et al. | : | |
| Application No. 10/447,505 | : | DECISION ON PETITION |
| Filed: 05/29/2003 | : | |
| Attorney Docket No. TI-34756 | : | |

This is a decision on the petition under the unintentional provisions of 37 CFR 1.137(b), filed April 23, 2010, to revive the above-identified application.

The petition is **GRANTED**.

The application became abandoned for failure to reply in a timely manner to the final Office action mailed August 26, 2009, which set a shortened statutory period for reply of three (3) months. No extensions of time under the provisions of 37 CFR 1.136(a) were obtained. Accordingly, the application became abandoned on November 27, 2009. A Notice of Abandonment was mailed on March 31, 2010.

Petitioner has met the requirements to revive the above-identified application pursuant to 37 CFR 1.137(b). Petitioner submitted the required reply, paid the requisite fees, and made the proper statement of unintentional delay.

This matter is being referred to Technology Center Art Unit 2618.

Telephone inquiries related to this decision should be directed to the undersigned at (571) 272-3211.

C. T. Donnell

Christina Tartera Donnell
Senior Petitions Attorney
Office of Petitions

UNITED STATES PATENT AND TRADEMARK OFFICE

Commissioner for Patents
United States Patent and Trademark Office
P.O. Box 1450
Alexandria, VA 22313-1450
www.uspto.gov

Paper No.

FISH & RICHARDSON P.C.
P.O. Box 1022
MINNEAPOLIS MN 55440-1022

MAILED
MAY 16 2011
OFFICE OF PETITIONS

| | | |
|---|---|---|
| In re Patent No. 7,895,513 | : | |
| Puri et al. | : | DECISION ON |
| Issue Date: February 22, 2011 | : | REQUEST FOR |
| Application No. 10/447,718 | : | RECONSIDERATION OF |
| Filed: May 28, 2003 | : | PATENT TERM ADJUSTMENT |
| Attorney Docket No. 07844-585001/ | : | |
| P539 | : | |

This is a decision on the "APPLICATION FOR PATENT TERM ADJUSTMENT UNDER 37 CFR § 1.705(d)," filed April 21, 2011, requesting that the patent term adjustment determination for the above-identified patent be changed from one thousand and six (1006) days to one thousand, one hundred and thirty-four (1134) days.

The request for reconsideration of patent term adjustment is **DISMISSED**.

On February 22, 2011, the above-identified application matured into US Patent No. 7,895,513 with a patent term adjustment of 1006 days. This request for reconsideration of patent term adjustment was timely filed within two months of the issue date of the patent. See 37 C.F.R. § 1.705(d).

The Office acknowledges submission of the $200.00 fee set forth in 37 CFR 1.18(e). No additional fees are required.

Patentee maintains entitlement to a period of adjustment due to the Three Year Delay by the Office, pursuant to 37 CFR § 1.703(b), of 503 days.

The period of adjustment of 783 days of examination delay is not in dispute.

The period of reduction of 50 days of Applicant delay is not in dispute.

The 102-day period of overlap between the examination delay and the B-delay is not in dispute.

The sole item that is in dispute is the effect of the RCE-cutoff on B-delay. **The Office maintains that the entire period from the filing date of the request for continued examination (RCE) to the issue date of the patent is not included in the "B" delay period**, and the over three-year period begins on May 29, 2006 and ends on June 7, 2007, the day before the first RCE was filed, which amounts to 375 (not 503) days. See U.S.C. 154(b)(1)(B)(i). As such, the patent term adjustment is 1006, not 1134 days.

Patentee argues that the 128-day period between the mailing of the notice of allowance on October 18, 2010 and the issuance of the patent on February 22, 2011 should be included in the period of B-delay, as this time "was not 'consumed by continued examination of the application." As such, Patentee argues that the over three period begins on May 29, 2006 (the day after the three-year anniversary of the filing of the application), pauses on June 7, 2007 (the day before the filing of the first RCE), restarts on June 7, 2010 with the mailing of the notice of allowance, and ends on February 22, 2011 with the issuance of the patent.

**The Office holds that the entire period between the filing of the first RCE on June 8, 2007 and the issuance of the patent on February 22, 2011 is not included in the over three-year period.**

37 C.F.R. § 1.703(b)(1) sets forth, in toto:

> (b) The period of adjustment under § 1.702(b) is the number of days, if any, in the period beginning on the day after the date that is three years after the date on which the application was filed under 35 U.S.C. 111(a) or the national stage commenced under 35 U.S.C. 371(b) or (f) in an international application and ending on the date a patent was issued, but not including the sum of the following periods:
> (1) The number of days, if any, in the period beginning on the date on which a request for continued examination of the application under 35 U.S.C. 132(b) was filed and ending on the date the patent was issued (emphasis added);

It follows that the proper manner of calculating the RCE-cutoff is to terminate the over three-year period on the day before the RCE was filed, since the entire period between the filing of the RCE and the date on which the patent issued is not included in the B-delay, pursuant to 37 C.F.R. § 1.703(b)(1), reproduced above. Put another way, the over three-year period, once cut off by the filing of an RCE, does not restart upon the mailing of a notice of allowance.

Accordingly, at issuance, the Office properly entered 375 additional days of patent term adjustment for the Office taking in excess of 3 years to issue the patent. It follows that Patentee is entitled to a patent term adjustment of 1006 days:

| | |
|---|---|
| | 783 days of examination delay |
| + | 375 days attributable to the Office taking in excess of 3 years to issue the patent |
| – | 102 days of overlap |
| – | 50 days of Applicant delay. |

In view thereof, no adjustment to the patent term will be made. It follows that a certificate of correction is not required.

Patentee is given **one (1) month or thirty (30) days**, whichever is longer, from the mail date of this decision to respond. No extensions of time will be granted under 37 C.F.R. § 1.136.

Any response to this decision should indicate in a prominent manner that the attorney handling this matter is Paul Shanoski, and may be submitted by mail,[1] hand-delivery,[2] or facsimile.[3] Registered users of EFS-Web may alternatively submit a response to this decision via EFS-Web.[4]

---

[1] Mail Stop Petition, Commissioner for Patents, United States Patent and Trademark Office, P.O. Box 1450, Alexandria, VA, 22313-1450.
[2] Customer Window, Randolph Building, 401 Dulaney Street, Alexandria, VA, 22314.
[3] (571) 273-8300: please note this is a central facsimile number.
[4] https://sportal.uspto.gov/authenticate/authenticateuserlocalepf.html

Telephone inquiries regarding this decision may be directed to the undersigned at (571) 272-3225.[5]

/Paul Shanoski/
Paul Shanoski
Senior Attorney
Office of Petitions

[5] Petitioner will note that all practice before the Office should be in writing, and the action of the Office will be based exclusively on the written record in the Office. See 37 C.F.R. § 1.2. As such, Petitioner is reminded that no telephone discussion may be controlling or considered authority for any further action(s) of Petitioner.

UNITED STATES PATENT AND TRADEMARK OFFICE

Commissioner for Patents
United States Patent and Trademark Office
P.O. Box 1450
Alexandria, VA 22313-1450
www.uspto.gov

MAILED

SEP 27 2011

OFFICE OF PETITIONS

**PERKINS COIE LLP**
**P.O. BOX 1208**
**SEATTLE WA 98111-1208**

| | | |
|---|---|---|
| In re Patent No. 7,327,346 | : | |
| Issue Date: February 5, 2008 | : | |
| Application No. 10/447,719 | : | NOTICE |
| Filed: May 28, 2003 | : | |
| Attorney Docket No. 76614.8048.US01 | : | |

This is a notice regarding your request for acceptance of a fee deficiency submission under 37 CFR 1.28. On September 1, 1998, the Court of Appeals for the Federal Circuit held that 37 CFR 1.28(c) is the sole provision governing the time for correction of the erroneous payment of the issue fee as a small entity. **See DH Technology v. Synergystex International, Inc. 154 F.3d 1333, 47 USPQ2d 1865 (Fed. Cir. Sept. 1, 1998).**

The Office no longer investigates or rejects original or reissue applications under 37 CFR 1.56. **1098 Off. Gaz. Pat. Office 502 (January 3, 1989)**. Therefore, nothing in this Notice is intended to imply that an investigation was done.

Your fee deficiency submission under 37 CFR 1.28 is hereby **ACCEPTED**.

This application is no longer entitled to small entity status. Accordingly, all future fees paid in this application must be paid at the large entity rate.

Inquiries related to this communication should be directed to Diane Goodwyn at (571) 272-6735.

Thurman K. Page
Petitions Examiner
Office of Petitions

UNITED STATES PATENT AND TRADEMARK OFFICE

Commissioner for Patents
United States Patent and Trademark Office
P.O. Box 1450
Alexandria, VA 22313-1450
www.uspto.gov

ARGILENT TECHNOLOGIES, INC.
LEGAL DEPARTMENT, DL429
INTELLECTUAL PROPERTY ADMINISTRATION
PO BOX 7599
LOVELAND, CO 80537-0599

**MAILED**

FEB 14 2011

**OFFICE OF PETITIONS**

In re Application of
Charles D. Hoke
Application No. 10/447,831
Filed: June 12, 2006
Attorney Docket No. 10003348-1

DECISION ON PETITION

This is a decision on the petition, filed June 12, 2006, which is being treated as a petition under 37 CFR 1.181 (no fee) requesting withdrawal of the holding of abandonment in the above-identified application.

The petition is **DISMISSED**.

This application was held abandoned for failure to reply to the Notice of Allowability (Notice) mailed October 31, 2005 which set a three (3) month statutory period for reply. A Notice of Abandonment was mailed on April 6, 2006.

A review of the record discloses that the petitioner timely filed the issue and publication fees to the Notice of Allowance and Fee(s) due, however, the petitioner failed to file a reply to the Notice of Allowability mailed October 31, 2005. The Notice of Allowability required applicant to file corrected drawings. Petitioner states that a telephone conversation with the Examiner on May 22, 2006, states that the Examiner would send a PTO-90C confirming that the originally-filed drawings were and are still acceptable. The Office action was never mailed and the Interview summary was not mailed until June 5, 2006 which is after the application was already abandoned. Since the petitioner neglected to file some type of response to the Notice prior to the abandonment of the application, the application is considered properly abandoned.

In view of the above, the petition under 37 CFR 1.181 (no fee) requesting withdrawal of the holding of abandonment cannot be granted at the present time.

**ALTERNATIVE VENUE**

Petitioner is strongly encouraged to consider filing a petition under 37 CFR 1.137(b) to revive an unintentionally abandoned application instead of filing a renewed petition under 37 CFR 1.181 or a petition under 37 CFR 1.137(a).

A grantable petition pursuant to 37 CFR 1.137(b) must be accompanied by:

(1) The reply required to the outstanding Office action or notice, unless previously filed. In non-provisional utility application abandoned for failure to respond to a non-final Office action, the required reply may be met by filing either (A) an argument or amendment under 37 CFR 1.111 or (B) a continuing application under 37 CFR 1.53(b).

(2) The petition fee as set forth in 37 CFR 1.17(m), **$1620.00 for a large entity**;

(3) A statement that the entire delay in filing the required reply from the due date for the reply until the filing of a grantable petition was unintentional. The Director may require additional information where there is a question whether the delay was unintentional.

A form for filing a petition to revive an unintentionally abandoned application accompanies this decision for petitioner's convenience. If petitioner desires to file a petition under 37 CFR 1.137(b) instead of filing a request for reconsideration, petitioner must complete the enclosed petition form (PTO/SB/64) and pay the $1620.00 petition fee.

Any request for reconsideration of this decision should be filed within **TWO (2) MONTHS** from the mail date of this decision. *Note* 37 CFR 1.181(f). The request for reconsideration should include a cover letter and be entitled as a "Renewed Petition under 37 CFR 1.181 to Withdraw the Holding of Abandonment."

Further correspondence with respect to this matter should be addressed as follows:

By Mail: Mail Stop PETITION
Commissioner for Patents
P. O. Box 1450
Alexandria, VA 22313-1450

By hand: U. S. Patent and Trademark Office
Customer Service Window, Mail Stop Petitions
Randolph Building
401 Dulany Street
Alexandria, VA 22314

By facsimile: **(571) 273-8300**
Attn: Office of Petitions

Telephone inquiries concerning this decision should be directed to April M. Wise at (571) 272-1642. All other inquiries concerning this application should be directed to the Office Data Management at their hotline 571-272-4200.

/Carl Friedman/
Carl Friedman
Petitions Examiner
Office of Petitions

Enclosures: Petition For Revival Of An Application For Patent Abandoned Unintentionally Under 37 CFR 1.137(b); Form PTO/SB/64, Privacy Act Statement;

UNITED STATES PATENT AND TRADEMARK OFFICE

Commissioner for Patents
United States Patent and Trademark Office
P.O. Box 1450
Alexandria, VA 22313-1450
www.uspto.gov

ARGILENT TECHNOLOGIES, INC.
LEGAL DEPARTMENT, DL429
INTELLECTUAL PROPERTY ADMINISTRATION
PO BOX 7599
LOVELAND, CO 80537-0599

MAILED
MAY 17 2011
OFFICE OF PETITIONS

| | | |
|---|---|---|
| In re Application of | : | |
| Charles D. Hoke | : | |
| Application No. 10/447,831 | : | DECISION ON PETITION |
| Filed: June 12, 2006 | : | |
| Attorney Docket No. 10003348-1 | : | |

This is a decision on the petition under the unintentional provisions of 37 CFR 1.137(b), filed April 8, 2011, to revive the above-identified application.

There is no indication that the person signing the instant petition was ever given a power of attorney or authorization of agent to prosecute the above-identified application. In accordance with 37 CFR 1.34(a), the signature appearing on the petition shall constitute a representation to the United States Patent and Trademark Office that he/she is authorized to represent the particular party in whose behalf he/she acts. However, if petitioner desires to receive future correspondence regarding this application, the appropriate power of attorney or authorization of agent must be submitted. All future correspondence regarding this application file will be directed solely to the address of record until otherwise instructed.

It is not apparent whether the statement of unintentional delay was signed by a person who would have been in a position of knowing that the entire delay in filing the required reply from the due date for the reply until the filing of a grantable petition pursuant to 37 CFR 1.137(b) was unintentional. Nevertheless, in accordance with 37 CFR 10.18, the statement is accepted as constituting a certification of unintentional delay. However, in the event that petitioner has no knowledge that the delay was unintentional, petitioner must make such an inquiry to ascertain that, in fact, the delay was unintentional. If petitioner discovers that the delay was intentional, petitioner must so notify the Office.

This application became abandoned for failure to timely submit corrected formal drawings on or before January 31, 2011, as required by the Notice of Allowance and Fee(s) Due and the Notice

of Allowability, mailed October 31, 2010. Accordingly, the date of abandonment of this application is February 1, 2011.

The petition satisfies the requirements of 37 CFR 1.137(b) in that petitioner has supplied (1) the reply in the form of corrected formal drawings , (2) the petition fee of $1620; and (3) a proper statement of unintentional delay.

In view of the above, the petition is **GRANTED**.

The drawings have been approved by the USPTO draftsperson.

The application file does not indicate a change of address has been filed in this case, although the address given on the petition differs from the address of record. A change of address should be filed in this case in accordance with MPEP 601.03. A courtesy copy of this decision is being mailed to the address noted on the petition. However, until otherwise instructed, all future correspondence regarding this application will be mailed solely to the address of record.

Telephone inquiries concerning this decision should be directed to undersigned at (571) 272-1642. All other inquiries concerning this application should be directed to the Office of Data Management at their hotline 571-272-4200.

This application is being referred to the Office of Data Management for processing into a patent.

April M. Wise
Petitions Examiner
Office of Petitions

cc: WILLIAM S. FRANCOS
ONE FREEDOM SQUARE
11951 FREEDOM DRIVE
SUITE 1260
RESTON, VA 20190

UNITED STATES PATENT AND TRADEMARK OFFICE

Commissioner for Patents
United States Patent and Trademark Office
P.O. Box 1450
Alexandria, VA 22313-1450
www.uspto.gov

**JOHNSON & STAINBROOK, LLP**
**412 AVIATION BOULEVARD**
**SUITE H**
**SANTA ROSA CA 95403**

**MAILED**
SEP 06 2011
**OFFICE OF PETITIONS**

| | | |
|---|---|---|
| In re Patent No. 6,698,766 | : | |
| Issue Date: March 2, 2004 | : | |
| Application No. 10/448,802 | : | NOTICE |
| Filed: May 30, 2003 | : | |
| Attorney Docket No. 00434.P5US | : | |

This is a notice regarding your request, August 22, 2011, for acceptance of a fee deficiency submission under 37 CFR 1.28.

On September 1, 1998, the Court of Appeals for the Federal Circuit held that 37 CFR 1.28(c) is the sole provision governing the time for correction of the erroneous payment of the issue fee as a small entity. **See DH Technology v. Synergystex International, Inc. 154 F.3d 1333, 47 USPQ2d 1865 (Fed. Cir. Sept. 1, 1998).**

The Office no longer investigates or rejects original or reissue applications under 37 CFR 1.56. **1098 Off. Gaz. Pat. Office 502 (January 3, 1989)**. Therefore, nothing in this Notice is intended to imply that an investigation was done.

Your fee deficiency submission under 37 CFR 1.28 is hereby **ACCEPTED**.

This patent is no longer entitled to small entity status. Accordingly, all future fees paid in this patent must be paid at the large entity rate.

*/Liana Walsh/*
Liana Walsh
Petitions Examiner
Office of Petitions

cc: PAUL AND PAUL
2000 MARKET STREET
SUITE 2900
PHILADELPHIA, PA 19103

UNITED STATES PATENT AND TRADEMARK OFFICE

Commissioner for Patents
United States Patent and Trademark Office
P.O. Box 1450
Alexandria, VA 22313-1450
www.uspto.gov

MAILED
FEB 06 2012
OFFICE OF PETITIONS

CROWELL & MORING LLP
INTELLECTUAL PROPERTY GROUP
P.O. BOX 14300
WASHINGTON DC 20044-4300

| | | |
|---|---|---|
| In re Patent No. 7,537,416 | : | |
| Issued: May 26, 2009 | : | |
| Application No. 10/448,812 | : | ON PETITION |
| Filed: May 30, 2003 | : | |
| Attorney Docket No. B500930 | : | |

This is a decision on the petition, filed January 18, 2012, which is being treated as a request under 37 CFR 3.81(b)[1] to correct the assignee's name on the Fee(s) Transmittal form PTOL-85(b) so that the Letters Patent will issue to the assignee.

The request is **DISMISSED**.

Petitioner states that the correct assignee's name is Union Oil Company of California DBA Unocal and that an incorrect assignee's name was included on the Part B - Fee(s) Transmittal form at the time of payment of the issue fee. Accordingly, petitioner requests issuance of a certificate of correction in the instant patent.

37 CFR 3.81(b), effective June 25, 2004, reads:

> *After payment of the issue fee:* Any request for issuance of an application in the name of the assignee submitted after the date of payment of the issue fee, and any request for a patent to be corrected to state the name of the assignee, must state that the assignment was submitted for recordation as set forth in § 3.11 before issuance of the patent, and must include a request for a certificate of correction under § 1.323 of this chapter (accompanied by the fee set forth in § 1.20(a)) and the processing fee set forth in § 1.17(i) of this chapter.

[1] See, MPEP 1309, subsection II and Official Gazette of June 22, 2004

The request under 37 CFR 3.81(b) was not accompanied by a request for a certificate of correction as required by 3.81(b). See, MPEP 1481.01. As petitioner has failed to comply with the provisions of 37 CFR 3.81(b), the request cannot be granted at this time.

A review of Office database assignment records reflects that an assignment to Union Oil Company of California DBA Unocal has been recorded. Therefore, upon submission of the required certificate of correction, it would be appropriate for the Office to issue a certificate of correction to correct the front page of the Letters Patent to reflect that Union Oil Company of California DBA as Unocal was the assignee of record at the time of issuance of the application into a patent. See, 35 U.S.C. § 152.

Any request for reconsideration must include the required certificate of correction. See, enclosed.

There is no indication that the petition is signed by a registered patent attorney or patent agent of record. However, in accordance with 37 CFR 1.34, practitioner's signature appearing on the correspondence shall constitute a representation to the United States Patent and Trademark Office that he is authorized to represent the particular party in whose behalf he acts. If practitioner desires to receive correspondence regarding this file, the appropriate power of attorney documents must be submitted. A courtesy copy of this decision is being mailed to practitioner, the petitioner herein. However, until otherwise instructed, all future correspondence regarding this application file will be directed solely to the above-noted correspondence address of record.

Inquiries concerning this decision should be directed to the undersigned at (571) 272-3205.

*/ALESIA M. BROWN/*

Alesia M. Brown
Attorney Advisor
Office of Petitions

CC: MELISSA HAYWORTH
Merchant & Gould P.C.
P.O. BOX 2903
Minneapolis, Minnesota 55402-0903

PTO/SB/44 (09-07)
Approved for use through 08/31/2013. OMB 0651-0033
U.S. Patent and Trademark Office; U.S. DEPARTMENT OF COMMERCE
Under the Paperwork Reduction Act of 1995, no persons are required to respond to a collection of information unless it displays a valid OMB control number.
(Also Form PTO-1050)

# UNITED STATES PATENT AND TRADEMARK OFFICE
## CERTIFICATE OF CORRECTION

Page _____ of _____

PATENT NO. :

APPLICATION NO.:

ISSUE DATE :

INVENTOR(S) :

It is certified that an error appears or errors appear in the above-identified patent and that said Letters Patent is hereby corrected as shown below:

MAILING ADDRESS OF SENDER (Please do not use customer number below):

This collection of information is required by 37 CFR 1.322, 1.323, and 1.324. The information is required to obtain or retain a benefit by the public which is to file (and by the USPTO to process) an application. Confidentiality is governed by 35 U.S.C. 122 and 37 CFR 1.14. This collection is estimated to take 1.0 hour to complete, including gathering, preparing, and submitting the completed application form to the USPTO. Time will vary depending upon the individual case. Any comments on the amount of time you require to complete this form and/or suggestions for reducing this burden, should be sent to the Chief Information Officer, U.S. Patent and Trademark Office, U.S. Department of Commerce, P.O. Box 1450, Alexandria, VA 22313-1450. DO NOT SEND FEES OR COMPLETED FORMS TO THIS ADDRESS. **SEND TO: Attention Certificate of Corrections Branch, Commissioner for Patents, P.O. Box 1450, Alexandria, VA 22313-1450.**

*If you need assistance in completing the form, call 1-800-PTO-9199 and select option 2.*

# Privacy Act Statement

The **Privacy Act of 1974 (P.L. 93-579)** requires that you be given certain information in connection with your submission of the attached form related to a patent application or patent. Accordingly, pursuant to the requirements of the Act, please be advised that: (1) the general authority for the collection of this information is 35 U.S.C. 2(b)(2); (2) furnishing of the information solicited is voluntary; and (3) the principal purpose for which the information is used by the U.S. Patent and Trademark Office is to process and/or examine your submission related to a patent application or patent. If you do not furnish the requested information, the U.S. Patent and Trademark Office may not be able to process and/or examine your submission, which may result in termination of proceedings or abandonment of the application or expiration of the patent.

The information provided by you in this form will be subject to the following routine uses:

1. The information on this form will be treated confidentially to the extent allowed under the Freedom of Information Act (5 U.S.C. 552) and the Privacy Act (5 U.S.C 552a). Records from this system of records may be disclosed to the Department of Justice to determine whether disclosure of these records is required by the Freedom of Information Act.
2. A record from this system of records may be disclosed, as a routine use, in the course of presenting evidence to a court, magistrate, or administrative tribunal, including disclosures to opposing counsel in the course of settlement negotiations.
3. A record in this system of records may be disclosed, as a routine use, to a Member of Congress submitting a request involving an individual, to whom the record pertains, when the individual has requested assistance from the Member with respect to the subject matter of the record.
4. A record in this system of records may be disclosed, as a routine use, to a contractor of the Agency having need for the information in order to perform a contract. Recipients of information shall be required to comply with the requirements of the Privacy Act of 1974, as amended, pursuant to 5 U.S.C. 552a(m).
5. A record related to an International Application filed under the Patent Cooperation Treaty in this system of records may be disclosed, as a routine use, to the International Bureau of the World Intellectual Property Organization, pursuant to the Patent Cooperation Treaty.
6. A record in this system of records may be disclosed, as a routine use, to another federal agency for purposes of National Security review (35 U.S.C. 181) and for review pursuant to the Atomic Energy Act (42 U.S.C. 218(c)).
7. A record from this system of records may be disclosed, as a routine use, to the Administrator, General Services, or his/her designee, during an inspection of records conducted by GSA as part of that agency's responsibility to recommend improvements in records management practices and programs, under authority of 44 U.S.C. 2904 and 2906. Such disclosure shall be made in accordance with the GSA regulations governing inspection of records for this purpose, and any other relevant (*i.e.*, GSA or Commerce) directive. Such disclosure shall not be used to make determinations about individuals.
8. A record from this system of records may be disclosed, as a routine use, to the public after either publication of the application pursuant to 35 U.S.C. 122(b) or issuance of a patent pursuant to 35 U.S.C. 151. Further, a record may be disclosed, subject to the limitations of 37 CFR 1.14, as a routine use, to the public if the record was filed in an application which became abandoned or in which the proceedings were terminated and which application is referenced by either a published application, an application open to public inspection or an issued patent.
9. A record from this system of records may be disclosed, as a routine use, to a Federal, State, or local law enforcement agency, if the USPTO becomes aware of a violation or potential violation of law or regulation.

## SPE RESPONSE FOR CERTIFICATE OF CORRECTION

Paper No.: _____

DATE : 10/14/10

TO SPE OF : ART UNIT 2161

SUBJECT : Request for Certificate of Correction for Appl. No.: 10/448,899

Patent No.: 7,739,313

Please respond to this request for a certificate of correction within 7 days.

**FOR IFW FILES:** Should Cofc be approved

Please review the requested changes/corrections as shown in the **COCIN** document(s) in the IFW application image. No new matter should be introduced, nor should the scope or meaning of the claims be changed.

Please complete the response (see below) and forward the completed response to scanning using document code **COCX**.

**FOR PAPER FILES:**

Please review the requested changes/corrections as shown in the attached certificate of correction. Please complete this form (see below) and forward it with the file to:

**Certificates of Correction Branch (CofC)**
**Randolph Square – 9D10-A**
**Palm Location 7580**

**Thank You For Your Assistance**

**The request for issuing the above-identified correction(s) is hereby:**

Note your decision on the appropriate box.

- [x] **Approved** — **All** changes apply.
- [ ] **Approved in Part** — Specify below which changes **do not** apply.
- [ ] **Denied** — State the reasons for denial below.

_____

_____

_____

SPE _____ ART UNIT 2161

| Post-allowance Communication<br>**Notice of Allowability** | **Application No.**<br>10/449,010 | **Applicant(s)**<br>KAWASHIMA ET AL. |
|---|---|---|
| | **Examiner**<br>FRANK LU | **Art Unit**<br>1634 |

***-- The MAILING DATE of this communication appears on the cover sheet with the correspondence address--***

All claims being allowable, PROSECUTION ON THE MERITS IS (OR REMAINS) CLOSED in this application. If not included herewith (or previously mailed), a Notice of Allowance (PTOL-85) or other appropriate communication will be mailed in due course. **THIS NOTICE OF ALLOWABILITY IS NOT A GRANT OF PATENT RIGHTS.** This application is subject to withdrawal from issue at the initiative of the Office or upon petition by the applicant. See 37 CFR 1.313 and MPEP 1308.

1. ☐ This communication is responsive to _____.

2. ☒ The allowed claim(s) is/are *1,3,4,7,11,15 and 19*.

3. ☐ Acknowledgment is made of a claim for foreign priority under 35 U.S.C. § 119(a)-(d) or (f).
   a) ☐ All b) ☐ Some* c) ☐ None of the:
      1. ☐ Certified copies of the priority documents have been received.
      2. ☐ Certified copies of the priority documents have been received in Application No. _____ .
      3. ☐ Copies of the certified copies of the priority documents have been received in this national stage application from the International Bureau (PCT Rule 17.2(a)).

   * Certified copies not received: _____.

Applicant has THREE MONTHS FROM THE "MAILING DATE" of this communication to file a reply complying with the requirements noted below. Failure to timely comply will result in ABANDONMENT of this application.
**THIS THREE-MONTH PERIOD IS NOT EXTENDABLE.**

4. ☐ A SUBSTITUTE OATH OR DECLARATION must be submitted. Note the attached EXAMINER'S AMENDMENT or NOTICE OF INFORMAL PATENT APPLICATION (PTO-152) which gives reason(s) why the oath or declaration is deficient.

5. ☐ CORRECTED DRAWINGS ( as "replacement sheets") must be submitted.
   (a) ☐ including changes required by the Notice of Draftsperson's Patent Drawing Review ( PTO-948) attached
      1) ☐ hereto or 2) ☐ to Paper No./Mail Date _____.
   (b) ☐ including changes required by the attached Examiner's Amendment / Comment or in the Office action of Paper No./Mail Date _____.

   **Identifying indicia such as the application number (see 37 CFR 1.84(c)) should be written on the drawings in the front (not the back) of each sheet. Replacement sheet(s) should be labeled as such in the header according to 37 CFR 1.121(d).**

6. ☐ DEPOSIT OF and/or INFORMATION about the deposit of BIOLOGICAL MATERIAL must be submitted. Note the attached Examiner's comment regarding REQUIREMENT FOR THE DEPOSIT OF BIOLOGICAL MATERIAL.

**Attachment(s)**

1. ☐ Notice of References Cited (PTO-892)
2. ☐ Notice of Draftperson's Patent Drawing Review (PTO-948)
3. ☐ Information Disclosure Statements (PTO/SB/08), Paper No./Mail Date _____
4. ☐ Examiner's Comment Regarding Requirement for Deposit of Biological Material
5. ☐ Notice of Informal Patent Application
6. ☐ Interview Summary (PTO-413), Paper No./Mail Date _____ .
7. ☒ Examiner's Amendment/Comment
8. ☒ Examiner's Statement of Reasons for Allowance
9. ☐ Other _____.

| /Frank W Lu /<br>Primary Examiner, Art Unit 1634 | April 12, 2011 |
|---|---|

**SPE RESPONSE FOR CERTIFICATE OF CORRECTION**

**Paper No.**:10/2011

**DATE** : February 3, 2012

**TO SPE OF** : ART UNIT 1634

**SUBJECT** : Request for Certificate of Correction on Patent No.: 7,985,565

A response is requested with respect to the accompanying request for a certificate of correction.

Please complete this form and return with file, within **7** days to:
**Certificates of Correction Branch - PK 3-910**
Palm location **7590** - Tel. No. 305-8201

With respect to the change(s) requested, correcting Office and/or Applicant's errors, should the patent read as shown in the certificate of correction? No new matter should be introduced, nor should the scope or meaning of the claims be changed.

**Thank You For Your Assistance** **Certificates of Correction Branch**

**The request for issuing the above-identified correction(s) is hereby:**
Note your decision on the appropriate box.

☒ **Approved** **All** changes apply.

☐ **Approved in Part** Specify below which changes **do not** apply.

☐ **Denied** State the reasons for denial below.

**Comments:**

**SPE:** /Dave Nguyen/ **Art Unit** 1634

## SPE RESPONSE FOR CERTIFICATE OF CORRECTION

**Paper No.**:10/2011

**DATE** : January 30, 2012

**TO SPE OF** : ART UNIT 1634

**SUBJECT** : Request for Certificate of Correction on Patent No.: 7,985,565

A response is requested with respect to the accompanying request for a certificate of correction.

Please complete this form and return with file, within **7** days to:
**Certificates of Correction Branch - PK 3-910**
Palm location **7590** - Tel. No. 305-8201

With respect to the change(s) requested, correcting Office and/or Applicant's errors, should the patent read as shown in the certificate of correction? No new matter should be introduced, nor should the scope or meaning of the claims be changed.

**Thank You For Your Assistance** **Certificates of Correction Branch**

**The request for issuing the above-identified correction(s) is hereby:**
Note your decision on the appropriate box.

☒ **Approved** **All** changes apply.

☐ **Approved in Part** Specify below which changes **do not** apply.

☐ **Denied** State the reasons for denial below.

**Comments:**

**SPE:** /Dave Nguyen/ **Art Unit** 1634

UNITED STATES PATENT AND TRADEMARK OFFICE

UNITED STATES DEPARTMENT OF COMMERCE
United States Patent and Trademark Office
Address: COMMISSIONER FOR PATENTS
P.O. Box 1450
Alexandria, Virginia 22313-1450
www.uspto.gov

| APPLICATION NO. | FILING DATE | FIRST NAMED INVENTOR | ATTORNEY DOCKET NO. | CONFIRMATION NO. |
|---|---|---|---|---|
| 10/449,159 | 05/30/2003 | Daniel L. Harple JR. | O-205 | 4735 |

51444 7590 01/30/2012
KRAGULJAC LAW GROUP, LLC / ORACLE
4700 Rockside Road
Summit One, Suite 510
Independence, OH 44131

| EXAMINER |
|---|
| LE, MICHAEL |

| ART UNIT | PAPER NUMBER |
|---|---|
| 2163 | |

| NOTIFICATION DATE | DELIVERY MODE |
|---|---|
| 01/30/2012 | ELECTRONIC |

**Please find below and/or attached an Office communication concerning this application or proceeding.**

The time period for reply, if any, is set in the attached communication.

Notice of the Office communication was sent electronically on above-indicated "Notification Date" to the following e-mail address(es):

MU@KRAGLAW.COM
DD@KRAGLAW.COM

UNITED STATES PATENT AND TRADEMARK OFFICE

Commissioner for Patents
United States Patent and Trademark Office
P.O. Box 1450
Alexandria, VA 22313-1450
www.uspto.gov

Pamela L. Granger
Kraguljac Law Group, LLC/Oracle
4700 Rockside Road
Summit One, Suite 510
Independence, OH 44131

| | | |
|---|---|---|
| In re Application of: | ) | |
| Daniel L. HARPLE, Jr. | ) | |
| Application No. 10/449,159 | ) | **DECISION ON PETITION** |
| Filed: May 30, 2003 | ) | **UNDER 37 CFR § 1.181** |
| For: METHOD AND SYSTEM FOR CATALOGING | ) | |
| AND MANAGING THE DISTRIBUTION OF | ) | |
| DISTRIBUTED DIGITAL ASSETS | ) | |

This is a decision on the Petition, filed on 13 December 2011, to Withdraw Finality of Office Action under 37 C.F.R. § 1.181.

The petition is **GRANTED**.

## BACKGROUND

On 01 April 2011, a non-final Office Action was mailed -- claims 24, 26, 30, 32, 33, 38, 40, 43, 45, 46, 51-55, 57, 61, and 63 were rejected under 35 USC § 102(b) as being anticipated by Syeda-Mahmood; claims 27, 58, 59, 60, 64, 65, and 68 were rejected under 35 USC § 103(a) as being unpatentable over Syeda-Mahmood in view of Hsiao et al; claims 28, 29, 34, 35, 41, 42, 47, and 48 were rejected under 35 USC § 103(a) as being unpatentable over Syeda-Mahmood in view of Hitson et al; claims 36, 37, 49 and 50 were rejected under 35 USC § 103(a) as being unpatentable over Syeda-Mahmood in view of Hitson and further in view of Headings et al; and claims 66 and 67 were rejected under 35 USC § 103(a) as being unpatentable over Syeda-Mahmood in view of Hitson and Headings and further in view of Hsiao et al.

On 29 June 2011, an amendment was filed; in the amendment, claims 24, 26-30, 32-38, 40-43, 45-55, 58-61, 63-68 have been amended.

On 28 October 2011, a Final Office Action was mailed – claims 24, 26-30, 32-38, 40-43, 44-55, 58-61, 63-65 were rejected under 35 USC § 102(e) as being anticipated by Lennon et al; claims 29, 34, 35, 42, 47, and 48 were rejected under 35 USC § 103(a) as being unpatentable over Lennon in view of Hitson et al; claims 36, 37, 49, 50, 66 and 67 were rejected under 35 USC §

103(a) as being unpatentable over Lennon in view of Hitson and further in view of Headings et al.

On 13 December 2011, the instant petition was filed seeking relief from Technology Center Director to hold the Final Office Action of 28 October 2011 as premature Final.

## RULES AND PROCEDURES

MPEP § 706.07(a) states in part that:

> ... A second or any subsequent action on the merits in any application or patent involved in reexamination proceedings should not be made final if it includes a rejection, on prior art not of record, of any claim amended to include limitations which should reasonably have been expected to be claimed...

## DECISION

A review of claim 24 indicates that applicant amended the limitation "receiving metadata ~~associated with~~ multiple digital content files stored in remote disparate content repositories over a first network" to – receiving metadata that defines characteristics of multiple digital content files stored in remote disparate content repositories over a first network --. A look-up of the term "metadata" indicates that metadata provides information about a certain item's content (i.e., defines characteristics of digital content files as claimed). Thus, it is determined that the term "metadata associated with" and "metadata that defines characteristics" are substantially the same meaning.

For the above stated reasons, the petition is **GRANTED.** The Office Action mailed on 28 October 2011 is been considered as a non-final Office Action.

It is noticed that amendment in responsive to the Office Action mailed on 28 October 2011 has been filed on 21 December 2011, and this amendment has been entered as a response to a non-final Office Action. Thus, the application has been forwarded to the examiner of record to examine the amendment of 21 December 2011 and to issue an appropriate Office communication.

Any inquiry concerning this decision should be directed to the undersigned whose telephone number is (571) 272-3613.

*/Vincent N. Trans/*
On behalf of TC Director Jack Harvey
Technology Center 2100
Computer Architecture and Software

UNITED STATES PATENT AND TRADEMARK OFFICE

Commissioner for Patents
United States Patent and Trademark Office
P.O. Box 1450
Alexandria, VA 22313-1450
www.uspto.gov

Ms. Diane Meyers
PPG, Inc.
39th Floor
One PPG Place
Pittsburgh PA 15272

**MAILED**

SEP 15 2011

**OFFICE OF PETITIONS**

In re Application of :
Tapesh Yadav et al. :
Application No. 10/449,282 : NOTICE
Filed: May 30, 2003 :
Attorney Docket No. **037768-0182** :

This is a notice regarding your request filed August 26, 2011, for acceptance of a fee deficiency submission under 37 CFR 1.28.

The Office no longer investigates or rejects original or reissue applications under 37 CFR 1.56. **1098 Off. Gaz. Pat. Office 502 (January 3, 1989)**. Therefore, nothing in this Notice is intended to imply that an investigation was done.

Your fee deficiency submission under 37 CFR 1.28 is hereby **ACCEPTED**.

There is no indication that the petition is signed by a registered patent attorney or patent agent of record. However, in accordance with 37 CFR 1.34, the signature of William E. Kuss appearing on the correspondence shall constitute a representation to the United States Patent and Trademark Office that he is authorized to represent the particular party in whose behalf he acts. If, William E. Kuss desires to receive correspondence regarding this file, the appropriate power of attorney documents must be submitted. A courtesy copy of this decision is being mailed to William E. Kuss, the petitioner herein. However, until otherwise instructed, all future correspondence regarding this application file will be directed solely to the above-noted correspondence address of record.

This patent application is no longer entitled to small entity status. Accordingly, all future fees paid in this application must be paid at the large entity rate.

Inquiries related to this communication should be directed to the undersigned at (571) 272-4584.

JoAnne Burke
Petitions Examiner
Office of Petitions

cc: William E. Kuss
K & L Gates Center
210 Sixth Avenue
Pittsburgh, PA 15222-2613

# UNITED STATES PATENT AND TRADEMARK OFFICE

UNITED STATES DEPARTMENT OF COMMERCE
United States Patent and Trademark Office
Address: COMMISSIONER FOR PATENTS
P.O. Box 1450
Alexandria, Virginia 22313-1450
www.uspto.gov

| APPLICATION NO. | FILING DATE | FIRST NAMED INVENTOR | ATTORNEY DOCKET NO. | CONFIRMATION NO. |
|---|---|---|---|---|
| 10/449,502 | 06/02/2003 | Dermot Christopher John Barrow | BARROW1.1 | 8723 |

1444 7590 02/07/2011
Browdy and Neimark, PLLC
1625 K Street, N.W.
Suite 1100
Washington, DC 20006

| EXAMINER |
|---|
| REICHLE, KARIN M |

| ART UNIT | PAPER NUMBER |
|---|---|
| 3992 | |

| MAIL DATE | DELIVERY MODE |
|---|---|
| 02/07/2011 | PAPER |

**Please find below and/or attached an Office communication concerning this application or proceeding.**

The time period for reply, if any, is set in the attached communication.

UNITED STATES PATENT AND TRADEMARK OFFICE

---

BEFORE THE
BOARD OF PATENT APPEALS AND INTERFERENCES

---

*Ex parte* DERMOT CHRISTOPHER JOHN BARROW

Application 10/449,502
Technology Center 3700

---

DECISION ON PETITION

This is a decision on the "Petition to Revive Patent Application Under 37 C.F.R. §1.137(b)," filed January 25, 2010 ("Petition to Revive").

*See* 75 Fed. Reg. 15,689-90 (Mar. 30, 2010) for authority of the Chief Administrative Patent Judge.

FINDINGS

1. On October 30, 2009, Appellant filed an Appeal Brief.

2. On December 18, 2009, the Primary Examiner issued a Communication Re: Appeal dismissing the appeal.

3. On the same day, December 18, 2009, the Primary Examiner issued a Notice of Abandonment stating the reasons in support of the dismissal.

4. On January 25, 2010, Appellant filed the present Petition and an Appeal Brief.

5. In respect to revival of an unintentionally abandoned application, 37 C.F.R. § 1.137(b) provides that:

(b) *Unintentional.* If the delay in reply by applicant or patent owner was unintentional, a petition may be filed pursuant to this paragraph to revive an abandoned application, a reexamination prosecution terminated under §§ 1.550(d) or 1.957(b) or limited under § 1.957(c), or a lapsed patent. A grantable petition pursuant to this paragraph must be accompanied by:

(1) The reply required to the outstanding Office action or notice, unless previously filed;

(2) The petition fee as set forth in § 1.17(m);

(3) A statement that the entire delay in filing the required reply from the due date for the reply until the filing of a grantable petition pursuant to this paragraph was unintentional. The Director may require additional information where there is a question whether the delay was unintentional; and

(4) Any terminal disclaimer (and fee as set forth in § 1.20(d)) required pursuant to paragraph (d) of this section.

6. The Petition to Revive was accompanied by:

(a) an Appeal Brief;

(b) the Petition fee; and

(c) A statement that "Applicant, through undersigned counsel, hereby states that the entire delay in filing the required reply from the due date for the required reply until the filing of a grantable petition pursuant 37 C.F.R. § 1.137(b) was unintentional."

7. There are no facts known by the Office that would cause the Office to question whether either the abandonment or delay in filing the Petition to Revive was unintentional.

8. Since the application was filed after June 8, 1995, on June 2, 2003, no terminal disclaimer is required.

9. A review of the Supplemental Appeal Brief filed on January 25, 2010 indicates that it is compliance with 37 C.F.R. § 41.37.

## DISCUSSION

As indicated above, Appellant has complied with all of the requirements of a petition under 37 C.F.R. § 1.137(b) for revival of an unintentionally abandoned application.

## DECISION

In view of the foregoing, the Petition to Revive is GRANTED and the Appeal Brief of January 25, 2010 will be returned to the Examiner for preparation of an Examiner's Answer.

James T. Moore
Acting Chief Administrative Patent Judge

Browdy and Neimark, PLLC
1625 K Street, N.W.
Suite 1100
Washington DC 20006

UNITED STATES PATENT AND TRADEMARK OFFICE

Commissioner for Patents
United States Patent and Trademark Office
P.O. Box 1450
Alexandria, VA 22313-1450
www.uspto.gov

**NEXSEN PRUET, LLC**
**PO DRAWER 2426**
**COLUMBIA SC 29202-2426**

**MAILED**

JAN 19 2011

**OFFICE OF PETITIONS**

| | | |
|---|---|---|
| In re Patent No. 6,963,275 | : | |
| Issue Date: November 08, 2005 | : | |
| Application No. 10/449,579 | : | DECISION ON PETITION |
| Filed: May 30, 2003 | : | |
| Attorney Docket No. **30865-01** | : | |

This is a decision on the petition under 37 CFR 1.378(c), filed August 10, 2010, to accept the unintentionally delayed payment of a maintenance fee for the above-identified patent.

The petition is **GRANTED**.

This patent expired at midnight on November 08, 2009 for failure to pay the three and one half year maintenance fee. Since this petition was submitted within twenty-four months after the six-month grace period provided in 37 CFR 1.362(e), the petition was timely filed under the provisions of 37 CFR 1.378(c).

The maintenance fee is hereby accepted and the above-identified patent is reinstated as of the mail date of this decision.

The file does not indicate a change of address has been submitted, although the address given on the petition differs from the address of record. If appropriate, a change of fee address (form PTO/SB/47) and a request for customer number (form PTO/SB/125) should be filed in accordance with Manual of Patent Examining Procedure, section 2540. A courtesy copy of this decision is being mailed to the address on the petition. However, the Office will mail all future correspondence solely to the address of record.

Telephone inquiries concerning this decision should be directed to Tredelle Jackson at (571) 272-2783.

Ramesh Krishnamurthy
Petitions Examiner
Office of Petitions

cc: **BRYAN H SMALLS**
**5868 SEABURY ST.**
**COLUMBIA SC 29203**

UNITED STATES PATENT AND TRADEMARK OFFICE

Commissioner for Patents
United States Patent and Trademark Office
P.O. Box 1450
Alexandria, VA 22313-1450
www.uspto.gov

**NORTH AMERICA INTELLECTUAL PROPERTY CORPORATION**
**P.O. BOX 506**
**MERRIFIELD VA 22116**

MAILED
APR 26 2011
OFFICE OF PETITIONS

| | | |
|---|---|---|
| In re Patent No. 6,980,269 | : | |
| Issue Date: September 2, 2003 | : | |
| Application No. 10/449,936 | : | NOTICE |
| Filed: May 30, 2003 | : | |
| Attorney Docket No. WISP0543USA | : | |

This is a notice regarding your request for acceptance of a fee deficiency submission under 37 CFR 1.28 filed March 25, 2011. On September 1, 1998, the Court of Appeals for the Federal Circuit held that 37 CFR 1.28(c) is the sole provision governing the time for correction of the erroneous payment of the issue fee as a small entity. **See DH Technology v. Synergystex International, Inc. 154 F.3d 1333, 47 USPQ2d 1865 (Fed. Cir. Sept. 1, 1998).**

The Office no longer investigates or rejects original or reissue applications under 37 CFR 1.56. **1098 Off. Gaz. Pat. Office 502 (January 3, 1989)**. Therefore, nothing in this Notice is intended to imply that an investigation was done.

Your fee deficiency submission under 37 CFR 1.28 is hereby accepted. The petition is **GRANTED**.

This application is no longer entitled to small entity status. Accordingly, all future fees paid in this application must be paid at the large entity rate.

This file is being forwarded to Files Repository.

Telephone inquiries related to this decision should be directed to the Kimberly Inabinet at (571) 272-4618.

/Kimberly Inabinet/
Kimberly Inabinet
Petitions Examiner
Office of Petitions

UNITED STATES PATENT AND TRADEMARK OFFICE

Commissioner for Patents
United States Patent and Trademark Office
P.O. Box 1450
Alexandria, VA 22313-1450
www.uspto.gov
DIW Jan-12

BLAKELY SOKOLOFF TAYLOR & ZAFMAN LLP
1279 OAKMEAD PARKWAY
SUNNYVALE CA 94085-4040

**MAILED**

JAN 24 2012

**OFFICE OF PETITIONS**

| | | |
|---|---|---|
| In re Patent No. 7,188,795 | : | |
| Issue Date: 03/13/2007 | : | |
| Application Number: 10/450,018 | : | ON PETITION |
| Filing Date: 11/18/2003 | : | |
| Attorney Docket Number: | : | |
| 8705.P061 | : | |

This is a decision on the petition under 37 CFR 1.378(c), filed on December 22, 2011, to accept the unintentionally delayed payment of a maintenance fee for the above-identified patent.

The petition is **GRANTED**.

This patent expired on March 13, 2011, for failure to timely pay the first maintenance fee. Since this petition was submitted within twenty-four months after the six-month grace period provided in 37 CFR 1.362(e), the petition was timely filed under the provisions of 37 CFR 1.378(c).

The maintenance fee is hereby accepted and the above-identified patent is reinstated as of the mail date of this decision.

The statement of unintentional delay was not signed by a person who would have been in a position of knowing that the delay in paying the maintenance fee was unintentional. Nevertheless, in accordance with 37 CFR 10.18, the statement is accepted as constituting a certification of unintentional delay. However, in the event that petitioner has no knowledge that the delay was in fact unintentional, petitioner should make a reasonable inquiry to ascertain that, in fact, the delay was unintentional. If petitioner discovers that the delay was intentional, petitioner must so notify the Office.

Receipt of the revocation and new power of attorney and change of correspondence address filed on December 22, 2011 is acknowledged. A Notice of Acceptance of Power of Attorney is being mailed under separate cover.

The address in the petition is different than the correspondence address. A courtesy copy of this decision is being mailed to the address in the petition. All future correspondence, however, will be mailed solely to the address of record.

Telephone inquiries related to this decision should be directed to the undersigned at (571) 272-3231.

Douglas I. Wood
Senior Petitions Attorney
Office of Petitions

Cc:

JONATHAN S. MILLER
BLAKELY, SOKOLOFF, TAYLOR & ZAFMAN
12400 WILSHRE BLVD., STE. 700
LOS ANGELES CA 90025

UNITED STATES PATENT AND TRADEMARK OFFICE

Commissioner for Patents
United States Patent and Trademark Office
P.O. Box 1450
Alexandria, VA 22313-1450
www.uspto.gov

**LADAS & PARRY LLP**
**26 WEST 61ST STREET**
**NEW YORK NY 10023**

MAILED
JAN 11 2011
OFFICE OF PETITIONS

| | | |
|---|---|---|
| Patent No. 7,846,656 | : | |
| Issue Date: December 7, 2010 | : | |
| Application No. 10/450,641 | : | ON PETITION |
| Filed: October 28, 2003 | : | |
| Attorney Docket No. U014640-8 | : | |

This is a decision on the petition filed December 14, 2010, under 37 CFR 3.81(b) to correct the name of the assignee on the front page of the above-identified patent by way of a Certificate of Correction.

The petition is **GRANTED**.

The patent file is being forwarded to the Certificates of Correction Branch for issuance of the requested Certificate of Correction.

Telephone inquiries concerning this decision may be directed to the Kimberly Inabinet at (571) 272-4618. Inquiries regarding the issuance of a certificate of correction should be directed to the Certificate of Correction Branch at (703) 305-8309.

/Carl Friedman/
Carl Friedman
Petitions Examiner
Office of Petitions

SPE RESPONSE FOR CERTIFICATE OF CORRECTION

DATE : 7-24-09

Paper No.: _____

TO SPE OF : ART UNIT 3677

SUBJECT : Request for Certificate of Correction for Appl. No. 10/450748 Patent No.: 7552953

Please respond to this request for a certificate of correction within 7 days.

**FOR IFW FILES:** Check Drawings

Please review the requested changes/corrections as shown in the **COCIN** document(s) in the IFW application image. No new matter should be introduced, nor should the scope or meaning of the claims be changed.

Please complete the response (see below) and forward the completed response to scanning using document code **COCX**.

**FOR PAPER FILES:**

Please review the requested changes/corrections as shown in the attached certificate of correction. Please complete this form (see below) and forward it with the file to:

**Certificates of Correction Branch (C of C)**
**Randolph Square 9C62-D**
**Palm Location 7580**

Ennis Young
**Certificates of Correction Branch**
**703-756-1542**

**Thank You For Your Assistance**

**The request for issuing the above-identified correction(s) is hereby:**
Note your decision on the appropriate box.

- [X] **Approved** — **All** changes apply.
- [ ] **Approved in Part** — Specify below which changes **do not** apply.
- [ ] **Denied** — State the reasons for denial below.

**Comments:** _____

/Victor Batson/
SPE

3677
Art Unit

**Doc Code: PET.PTA.RCAL**
**Document Description: Request for Recalculation in view of Wyeth**

PTO/SB/131 (01-10)
Approved for use through 02/28/2011. OMB 0651-0020
U.S. Patent and Trademark Office; U. S. DEPARTMENT OF COMMERCE
Under the Paperwork Reduction Act of 1995, no persons are required to respond to a collection of information unless it displays a valid OMB control number.

# REQUEST FOR RECALCULATION OF PATENT TERM ADJUSTMENT IN VIEW OF *WYETH**

| | |
|---|---|
| Attorney Docket Number: N9450.0074/P074 | Patent Number: 7,659,508 |
| Filing Date (or 371(b) or (f) Date): 06-18-2003 | Issue Date: 02-09-2010 |
| First Named Inventor: Osamu Nasu | |
| Title: METHOD FOR MEASURING DIMENSIONS OF SAMPLE AND SCANNING ELECTRON MICROSCOPE | |

PATENTEE HEREBY REQUESTS RECALCULATION OF THE PATENT TERM ADJUSTMENT (PTA) UNDER 35 USC 154(b) INDICATED ON THE ABOVE-IDENTIFIED PATENT. THE PATENTEE'S SOLE BASIS FOR REQUESTING THE RECALCULATION IS THE USPTO'S PRE-*WYETH* INTERPRETATION OF 35 U.S.C. 154(b)(2)(A).

Note: This form is only for requesting a recalculation of PTA for patents issued before March 2, 2010, if the sole basis for requesting the recalculation is the USPTO's pre-*Wyeth* interpretation of 35 U.S.C. 154(b)(2)(A). See Instruction Sheet on page 2 for more information.

Patentees are reminded that to preserve the right to review in the United States District Court for the District of Columbia of the USPTO's patent term adjustment determination, a patentee must ensure that he or she also takes the steps required under 35 U.S.C. 154(b)(3) and (b)(4) and 37 CFR 1.705 in a timely manner.

**Wyeth v. Kappos*, No. 2009-1120 (Fed. Cir., Jan. 7, 2010).

| | |
|---|---|
| Signature Jennifer M. McCue | Date August 6, 2010 |
| Name (Print/Typed) Jennifer M. McCue | Registration Number 55,440 |

***Note:*** *Signatures of all the inventors or assignees of record of the entire interest or their representative(s) are required in accordance with 37 CFR 1.33 and 11.18. Please see 37 CFR 1.4(d) for the form of the signature. If necessary, submit multiple forms for more than one signature, see below**.*

☑ *Total of 1 forms are submitted.

The information is required to obtain or retain a benefit by the public which is to file (and by the USPTO to process) an application. Confidentiality is governed by 35 U.S.C. 122 and 37 CFR 1.11 and 1.14. This collection is estimated to take 12 hours to complete, including gathering, preparing, and submitting the completed application form to the USPTO. Time will vary depending upon the individual case. Any comments on the amount of time you require to complete this form and/or suggestions for reducing this burden, should be sent to the Chief Information Officer, U.S. Patent and Trademark Office, U.S. Department of Commerce, P.O. Box 1450, Alexandria, VA 22313-1450. DO NOT SEND FEES OR COMPLETED FORMS TO THIS ADDRESS. **SEND TO: Commissioner for Patents, P.O. Box 1450, Alexandria, VA 22313-1450.**

*If you need assistance in completing the form, call 1-800-PTO-9199 and select option 2.*

UNITED STATES PATENT AND TRADEMARK OFFICE

UNITED STATES DEPARTMENT OF COMMERCE
United States Patent and Trademark Office
Address: COMMISSIONER FOR PATENTS
P.O. Box 1450
Alexandria, Virginia 22313-1450
www.uspto.gov

DICKSTEIN SHAPIRO LLP
1825 EYE STREET NW
Washington, DC 20006-5403

Mail Date: 08/13/2010

| | | |
|---|---|---|
| **Applicant** | : Osamu Nasu | : DECISION ON REQUEST FOR |
| **Patent Number** | : 7659508 | : RECALCULATION of PATENT |
| **Issue Date** | : 02/09/2010 | : TERM ADJUSTMENT IN VIEW |
| **Application No** | : 10/450,852 | : OF WYETH AND NOTICE OF INTENT TO |
| **Filed** | : 06/18/2003 | : ISSUE CERTIFICATE OF CORRECTION |
| | | : |

The Request for Recalculation is **GRANTED** to the extent indicated.

The patent term adjustment has been determined to be **0** days. The USPTO will *sua sponte* issue a certificate of correction reflecting the amount of PTA days determined by the recalculation.

Prior to the issuance of the certificate of correction, the USPTO will afford patentee an opportunity to be heard and request reconsideration. Accordingly, patentee has **one month or thirty (30) days**, whichever is longer, to file a request for reconsideration of this patent term adjustment calculation. See 35 U.S.C. 154(b)(3)(B)(ii) and 37 CFR 1.322(a)(4). No extensions of time will be granted under 37 CFR 1.136.

Patentee should use document code PET.OP if electronically filing a request for reconsideration of this patent term adjustment calculation. The patentee must also include the information required by 37 CFR 1.705(b)(2) and the fee required by 37 CFR 1.18(e). If patentee does not file a timely request for reconsideration of this patent term adjustment calculation including the information required by 37 CFR 1.705(b)(2) and the fee required by 37 CFR 1.18(e), the USPTO will issue a certificate of correction reflecting the PTA determination noted above.

Patentee should be aware that in order to preserve the right to review in the United States District Court for the District of Columbia of the USPTO patent term adjustment determination, patentee must ensure that he or she also take the steps required under 35 U.S.C. 154(b)(4)(A) in a timely manner. Nothing in the request for recalculation should be construed as providing an alternative time frame for commencing a civil action under 35 U.S.C. 154(b)(4)(A).

Any questions concerning this decision should be directed to the Office of Patent Legal Administration at 571-272-7702.

## SPE RESPONSE FOR CERTIFICATE OF CORRECTION

Paper No.: _____

DATE : March 18 2009

TO SPE OF : ART UNIT 1656

SUBJECT : Request for Certificate of Correction for Appl. No.: 10/450976 / 7445775

Please respond to this request for a certificate of correction within 7 days.

**FOR IFW FILES:**

Please review the requested changes/corrections as shown in the **COCIN** document(s) in the IFW application image. No new matter should be introduced, nor should the scope or meaning of the claims be changed.

Please complete the response (see below) and forward the completed response to scanning using document code **COCX**.

**FOR PAPER FILES:**

Please review the requested changes/corrections as shown in the attached certificate of correction. Please complete this form (see below) and forward it with the file to:

**Certificates of Correction Branch (CofC)**
**South Tower - 9A22**
**Palm Location 7580**

Magdalene Talley
**Certificates of Correction Branch**

**703-308-9390 ext. 120**

**Thank You For Your Assistance**

**The request for issuing the above-identified correction(s) is hereby:**
Note your decision on the appropriate box.

- ☑ **Approved** — **All** changes apply.
- ☐ **Approved in Part** — Specify below which changes **do not** apply.
- ☐ **Denied** — State the reasons for denial below.

**Comments:** _____

Manjunath
**SPE**

1656
**Art Unit**

UNITED STATES PATENT AND TRADEMARK OFFICE

Commissioner for Patents
United States Patent and Trademark Office
P.O. Box 1450
Alexandria, VA 22313-1450
www.uspto.gov

JEFFREY J. HOHENSHELL
710 MEDTRONIC PARKWAY
MINNEAPOLIS MN 55432

MAILED
FEB 14 2011
OFFICE OF PETITIONS

| | | |
|---|---|---|
| In re Application of | : | |
| Crews, et al. | : | |
| Application No. 10/450,989 | : | DECISION ON PETITION |
| Filed: May 24, 2004 | : | |
| Attorney Docket No. 023 // P0022497.00 | : | |

This is a decision on the petition under the unintentional provisions of 37 CFR 1.137(b), filed December 14, 2010, to revive the above-identified application.

The petition is **GRANTED**.

The application became abandoned for failure to submit corrected drawings in a timely manner in reply to the Notice of Allowability, mailed July 14, 2010, which set a period for reply of three (3) months. Accordingly, this application became abandoned on October 15, 2010. A Notice of Abandonment was mailed on October 27, 2010.

The petition satisfies the requirements of 37 CFR 1.137(b) in that petitioner has supplied (1) the reply in the form of corrected drawings, (2) the petition fee of $1,620.00, and (3) a proper statement of unintentional delay.

Telephone inquiries concerning this decision should be directed to the undersigned at (571) 272-3230.

This application is being referred to the Office of Data Management for processing into a patent.

Shirene Willis Brantley

Shirene Willis Brantley
Senior Petitions Attorney
Office of Petitions

UNITED STATES PATENT AND TRADEMARK OFFICE

Commissioner for Patents
United States Patent and Trademark Office
P.O. Box 1450
Alexandria, VA 22313-1450
www.uspto.gov

MERCHANT & GOULD PC
P.O. BOX 2903
MINNEAPOLIS MN 55402-0903

MAILED

JUL 14 2011

OFFICE OF PETITIONS

| | | |
|---|---|---|
| In re Application of | : | |
| Peter Rowan KELLOCK, et al. | : | |
| Application No. 10/451,041 | : | DECISION ON PETITION |
| Filed: June 18, 2003 | : | UNDER 37 CFR 1.183 |
| Attorney Docket No. 13267.3USWO | : | |

This is a decision on the petition under 37 CFR 1.182, filed May 6, 2011, which is properly treated as a petition under 37 CFR 1.183 to waive the requirements of 37 CFR 1.97(d).

The petition is **DISMISSED.**

Petitioner requests waiver of the rules as petitioner desires to have the references purportedly submitted September 7, 2004 considered by the examiner in this application.

37 CFR 1.8(c) provides that:

> The Office may require additional evidence to determine if the correspondence was timely filed.

37 CFR 1.97 provides that:

> (d) An information disclosure statement shall be considered by the Office if filed by the applicant after the period specified in paragraph (c) of this section, provided that the information disclosure statement is filed on or before payment of the issue fee and is accompanied by:
> (1) The statement specified in paragraph (e) of this section; and
> (2) The fee set forth in § 1.17(p).
> (e) A statement under this section must state either:
> (1) That each item of information contained in the information disclosure statement was first cited in any communication from a foreign patent office in a counterpart foreign application not more than three months prior to the filing of the information disclosure statement; or
> (2) That no item of information contained in the information disclosure statement was cited in a communication from a foreign patent office in a counterpart foreign application, and, to the knowledge of the person signing the certification after making

> reasonable inquiry, no item of information contained in the information disclosure statement was known to any individual designated in § 1.56(c) more than three months prior to the filing of the information disclosure statement.

37 CFR 1.181(f) states:

> The mere filing of a petition will not stay any period for reply that may be running against the application, nor act as a stay of other proceedings. Any petition under this part not filed within two months of the mailing date of the action or notice from which relief is requested may be dismissed as untimely, except as otherwise provided. This two-month period is not extendable.

37 CFR 1.183 states:

> In an extraordinary situation, when justice requires, any requirement of the regulations in this part which is not a requirement of the statutes may be suspended or waived by the Director or the Director's designee, *sua sponte*, or on petition of the interested party, subject to such other requirements as may be imposed. Any petition under this section must be accompanied by the petition fee set forth in § 1.17(h).

Initially it is noted that 37 CFR 1.181(f) permits the dismissal of a petition not filed within two months of the mailing date of the action or notice from which relief is requested. The instant petition appears to complain about the Office letter mailed June 29, 2010. As over 9 months has passed between that action and the instant petition, the instant petition is dismissed as untimely. As noted in Korsinsky v. Godici, 2005 U.S. Dist. LEXIS 20850, (S.D.N.Y. 2005), by operation of regulation, the Commissioner was entitled to dismiss Korsinsky's petition as untimely.

As consideration of the documents submitted May 6, 2011 would require a waive of 37 CFR 1.97(d) this petition is properly treated under 37 CFR 1.183.

Petitioner argues that the requirements of 37 CFR 1.97(d) be waived because petitioner believes that the references were timely filed on September 7, 2007. Petitioner includes as evidence of such submission a copy of a transmittal letter which states they are transmitting herewith the attached:

> Transmittal Sheet in duplicate containing Certificate of Mailing
> Supplemental Information Disclosure Statement, Form 1449, 34 Reference(s)
> Return postcard.

While a copy of the return postcard would provide evidence of the submission of the references, no copy of the return postcard has been provided. See MPEP 503. See also 37 CFR 1.8(c).

Petitioner further contends that petitioner failed to notice that the examiner stated in the June 29, 2010 Office action that the documents listed in the information disclosure statement were not considered because the information disclosure statement failed to comply with 37 CFR 1.98(a)(2).

In order to grant any petition under 37 CFR 1.183, petitioner must show (1) that this is an extraordinary situation where (2) justice requires waiver of the rule. In re Sivertz, 227 U.S.P.Q. 255, 256 (Comm'r Pat. 1985). Petitioner has not shown that either condition exists in this case.

The circumstances of this case do not demonstrate an extraordinary situation, much less one where justice requires waiver of the rules. Petitioner's contends that 37 CFR 1.97(d) be waived because petitioner failed to notice that the examiner did not consider documents listed in the information disclosure statement filed September 7, 2004 because the information disclosure statement failed to comply with 37 CFR 1.98(a)(2). However, the failure to timely submit a proper information disclosure statement was a circumstance entirely within petitioner's control, and could have been avoided by the exercise of reasonable care and diligence. Equitable powers should not be invoked to excuse the performance of a condition by a party that has not acted with reasonable, due care and diligence. U.S. v. Lockheed Petroleum Services, 709 F.2d 1472, 1475 (Fed. Cir. 1983). Furthermore, since the USPTO did not cause or contribute to petitioner's filing delay, this case is even further removed from consideration as one where "justice requires" equitable relief. See Helfgott & Karras, P.C. v. Dickinson, 209 F.3d 1328, 54 USPQ2d 1425 (Fed. Cir. 2000).

Circumstances resulting from petitioners', or petitioners' counsel's, failure to exercise due care, or lack of knowledge of, or failure to properly apply, the patent statutes or rules of practice are not, in any event, extraordinary circumstances where the interests of justice require the granting of relief. See, In re Tetrafluor, Inc., 17 USPQ2d 1160, 1162 (Comm'r Pats. 1990); In re Bird & Son, Inc. 195 USPQ 586, 588 (Comm'r Pats. 1977).

However, failure to know and properly apply the rules of practice before the USPTO is not a basis for seeking waiver of the rules under 1.183. Furthermore, extraordinary relief will not be considered where the rules of practice already provide an avenue for relief. It is brought to petitioner's attention that the USPTO will not normally consider an extraordinary remedy, when the rules already provide an avenue for obtaining the relief sought. See Cantello v. Rasmussen, 220 USPQ 664, 664 (Comm'r Pat. 1982). Here, petitioner may file the information disclosure statement in a continuing application by way of 37 CFR 1.53(b). Further in this regard, a standard principle of statutory construction is: expressio unius est exclusion alterius (the mention of one thing implies exclusion of another thing), namely absent legislative intent to the contrary, when a statute expressly provides a specific remedy for a specific situation, the statute is deemed to exclude other remedies for such situation. See National R.R. Passenger Corp. v. National Ass'n Of R.R. Passengers, 414 U.S. 453, 458 (1974); see also Botany Worsted Mills v. United States, 278 U.S. 282, 289 (1929)("when a statute limits a thing to be done in a particular mode, it includes the negative of any other mode"). That is, the patent statute at 35 U.S.C. 120 (and its promulgating regulation 37 CFR 1.53(b)) provides a specific mechanism whereby an applicant may file a continuing application. Since there is a specific mechanism in place to remedy the requested relief then it is inappropriate for the USPTO to contemplate circumventing that mechanism by creating another remedy.

Further correspondence with respect to this matter should be addressed as follows:

| | |
|---|---|
| By mail: | Mail Stop PETITIONS<br>Commissioner for Patents<br>Post Office Box 1450<br>Alexandria, VA 22313-1450 |
| By hand: | Customer Service Window<br>Mail Stop Petitions<br>Randolph Building<br>401 Dulany Street<br>Alexandria, VA 22314 |
| By fax: | (571) 273-8300<br>ATTN: Office of Petitions |

Telephone inquiries concerning this decision should be directed to the undersigned at (571) 272-7099. All other inquiries concerning the examination or status of this application should be directed to the Technology Center.

David Bucci
Petitions Examiner
Office of Petitions

UNITED STATES PATENT AND TRADEMARK OFFICE

Commissioner for Patents
United States Patent and Trademark Office
P.O. Box 1450
Alexandria, VA 22313-1450
www.uspto.gov

OBLON, SPIVAK, MCCLELLAND
MAIER & NEUSTADT, L.L.P.
1940 DUKE STREET
ALEXANDRIA VA 223

MAILED
AUG 26 2011
OFFICE OF PETITIONS

| | |
|---|---|
| In re Patent No. 7,157,487 | : ON PETITION |
| Nakayama et al. | : UNDER 37 CFR 1.183 |
| Issue Date: 07/24/2007 | : and |
| Application No. 10/451159 | : ON REQUEST FOR |
| Filing or 371(c) Date: 06/30/2003 | : RECONSIDERATION OF |
| Attorney Docket No. 238524US0PCT | : PATENT TERM ADJUSTMENT |

This is a decision on the "Petition Under 37 C.F.R. § 1.183 and on Petition Under 37 C.F.R. § 1.705(d) and Request for Reconsideration of Patent Term Adjustment," filed February 2, 2009, requesting suspension of the time limit for consideration of an application for patent term adjustment ("PTA"). The response is properly treated as a petition under 37 CFR 1.183.

This petition is hereby **dismissed**.

Your petition for recalculation/reconsideration of the USPTO's PTA determination for U.S. Patent No. 7,157,487 is dismissed as untimely. On February 1, 2010, the USPTO published a Federal Register notice that, *inter alia*, announced a limited waiver of the two-month deadline for filing a petition for reconsideration of a PTA determination under 37 CFR sec. 1.705(d). *See Interim Procedure for Patentees to Request a Recalculation of the Patent Term Adjustment to Comply with the Federal Circuit Decision in Wyeth v. Kappos Regarding Overlapping Delay Provisions of 35 U.S.C. sec. 154(b)(2)(A)*, 75 *Fed. Reg.* 5043 (Feb. 1, 2010) (notice).

Specifically, patent owners were permitted to request recalculation of a patent's PTA in view of the Federal Circuit decision *Wyeth v. Kappos*, 591 F.3d 1364 (Fed. Cir. 2010) up to 180 days after the grant of the patent. The USPTO determined not to accept any requests for PTA recalculation initially filed more than 180 days after patent grant, however, in view of the statutory judicial-review provisions of 35 U.S.C. sec. 154(b)(4), which require that any civil action to challenge the USPTO's PTA determination be brought within 180 days of patent grant. The USPTO believes that the statutory 180-day period for seeking court review of the USPTO's PTA determinations, particularly in view of the six-year statute of limitations that otherwise is applicable for actions under the Administrative Procedure Act, indicates a congressional intent

that PTA issues be resolved shortly after a patent issues. The USPTO does not consider it likely that Congress created a scheme under which the time period to seek initial USPTO review of a PTA determination extends beyond the time period provided for a dissatisfied patentee to seek judicial review of the USPTO's PTA determination. Thus, the USPTO believes that the 180-day period in 35 U.S.C. sec. 154(b)(4) represents the outer limit on the USPTO's ability to consider a patentee's initial request for PTA determination {to conclude its PTA determination}."

The present petition under 37 CFR 1.183 is requesting suspension of the time limit for consideration of an application for patent term adjustment under 37 CFR 1.183 is **dismissed**.

The balance of the fee for the petition under 37 CFR 1.183, $270.00, has been charged to petitioner's deposit account as authorized in the petition.

This patent file is being referred to the Files Repository.

Telephone inquiries specific to this matter should be directed to the undersigned at (571) 272-3232.

/DLW/

Derek L. Woods
Attorney
Office of Petitions

UNITED STATES PATENT AND TRADEMARK OFFICE

Commissioner for Patents
United States Patent and Trademark Office
P.O. Box 1450
Alexandria, VA 22313-1450
www.uspto.gov

January 23, 2012

Lawrence S. Perry
Fitzpatrick, Cella, Harper & Scinto
1290 Avenue of the Americas
New York, NY 10104-3800

Patent No. : 7,541,175 B1
Appl. No. : 10/451,308
Inventor(s) : Jeff Tolan, et al.
Issued : June 2, 2009
Title : **ALKALINE EXTRACTION STAGES COMPRISING XYLANASE**
Docket No. : 01039.014800.

Re: Request for Certificate of Correction

Consideration has been given your request for the issuance of a certificate of correction for the above-identified patent under the provisions of Rule 1.323.

Assignees' names and addresses (assignment data) printed in a patent, are based *solely* on information supplied in the appropriate space for identifying the assignment data, i.e., item 3 of the Issue Fee Transmittal Form PTOL-85B. Granting of a request under 37 CFR 3.81(b) is required to correct applicant's error providing ***incorrect or erroneous*** assignment data, *before* issuance of a Certificate of Correction, under 37 CFR 1.323 *(see Manual of Patent Examining Procedures (M.P.E.P) Chp.1400, sect. 1481).* This procedure is required *at any time after the issue fee is paid*, including after issuance of the patent.

In view of the foregoing, your request, in this matter, is hereby denied.

A petition to correct the Assignee under 37 CFR 3.81(b) should include:

A. **the processing fee set forth in 37 CFR 1.117(h) (currently $130);**
B. a statement that the failure to include the correct assignee name on the PTOL-85B was inadvertent; and
C. a copy of the Notice of Recordation of Assignment Document, reflecting the reel and frame number where the assignment(s) is recorded and/or reflecting proof of *the date* the assignment was submitted for recordation.

*In the Request*, Applicant(s) may request that the file be forwarded to Certificates of Correction Branch, for issuance of a Certificate of Correction, if the Request is granted.

Any request under 37 CFR 3.81(b) should be directed to the following address or facsimile number:

| | |
|---|---|
| By mail: | Mail Stop PETITIONS<br>Commissioner for Patents<br>Post Office Box 1450<br>Alexandria, VA 22313-1450 |
| By hand: | Customer Service Window<br>Mail Stop Petitions<br>Randolph Building<br>401 Dulany Street<br>Alexandria, VA 22314 |
| By fax: | (571) 273-8300<br>ATTN: Office of Petitions |

If a fee (currently $100) was previously submitted for consideration of a Request for Certificate of Correction, under CFR 1.323, to correct assignment data, no additional fee is required.

/Virginia Tolbert/
Virginia Tolbert
For Mary F. Diggs
Decisions & Certificates
of Correction Branch
(571) 272-0460

vt

UNITED STATES PATENT AND TRADEMARK OFFICE

Commissioner for Patents
United States Patent and Trademark Office
P.O. Box 1450
Alexandria, VA 22313-1450
www.uspto.gov

**MAILED**

MAR 20 2012

**OFFICE OF PETITIONS**

FITZPATRICK CELLA HARPER & SCINTO
1290 Avenue of the Americas
NEW YORK NY 10104-3800

In re Patent No. 7,541,745 :
Issue Date: June 2, 2009 :
Application No. 10/451,308 : ON PETITION
Filed: November 6, 2003 :
Attorney Docket No **01039.014800.** :

This is a decision on the petition filed March 6, 2012, which is being treated as a request under 37 CFR 3.81(b)[1] to correct the name of the assignee on the front page of the above-identified patent by way of a Certificate of Correction.

The request is **GRANTED**.

Petitioner states that the correct assignee's name is "Iogen Bio-Products Corportion" and that the incorrect assignee's name was included on the Fee(s) Transmittal form PTOL-85(b) at the time of payment of the issue fee. Accordingly, petitioner requests that a certificate of correction be issued to reflect the correct assignee on the front page of the Letters Patent in the patent to be issued from the application.

Telephone inquiries concerning this decision may be directed to the JoAnne Burke at (571) 272-4584. Inquiries regarding the issuance of a certificate of correction should be directed to the Certificate of Correction Branch at (571) 272-4200.

The Certificates of Correction Branch will be notified of this decision granting the petition under 37 CFR 3.81(b) and directing issuance of the requested Certificate of Correction.

/JoAnne Burke/
JoAnne Burke
Petitions Examiner
Office of Petitions

---

[1] *See* MPEP 1309, subsection II; and Official Gazette of June 22, 2004.

UNITED STATES PATENT AND TRADEMARK OFFICE

Commissioner for Patents
United States Patent and Trademark Office
P.O. Box 1450
Alexandria, VA 22313-1450
www.uspto.gov

MAILED

SEP 30 2010

OFFICE OF PETITIONS

**SCHIFF HARDIN, LLP**
**PATENT DEPARTMENT**
**233 S. WACKER DRIVE-SUITE 6600**
**CHICAGO, IL 60606-6473**

| | | |
|---|---|---|
| In re Application of | : | |
| Angel Castillo SENAL | : | |
| Application No. 10/451,312 | : | DECISION ON PETITION |
| Filed: November 12, 2003 | : | |
| Attorney Docket No. P03,0234 | : | |

This is a decision on the renewed petition, filed April 20, 2010 which is being treated as a petition under 37 CFR 1.181 (no fee) requesting withdrawal of the holding of abandonment in the above-identified application.

The petition is **GRANTED**.

This application was held abandoned for failure to reply to the non-compliant notice mailed April 05, 2007, which set a one (1) month shortened statutory period for reply. The application became abandoned on May 06, 2007.

Petitioner asserts that the SPE for the application informed him via telephone on April 25, 2007, the Notice of Non-Compliant Amendment will be vacated and that an office action on merits will follow. Petitioner, also states that the notice of abandonment was not received by mail.

A review of the Office records indicates that the Notices of Non-Compliant Amendment were issued in error.

In view of the above, the Notice of Abandonment is hereby vacated and the holding of abandonment withdrawn.

Telephone inquiries concerning this decision should be directed to Michelle R. Eason at (571) 272-4231.

This application is being referred to Technology Center AU 3635 for appropriate action in the normal course of business on the reply previously received.

Thurman K. Page
Petitions Examiner
Office of Petitions

United States Patent and Trademark Office

Commissioner for Patents
United States Patent and Trademark Office
P.O. Box 1450
Alexandria, VA 22313-1450
www.uspto.gov

NOVARTIS
CORPORATE INTELLECTUAL PROPERTY
ONE HEALTH PLAZA 101/2
EAST HANOVER NJ 07936-1080

**MAILED**

MAR 18 2011

PCT LEGAL ADMINISTRATION

In re Application of :
Bhatia et al. :
Application No.: 10/451,316 :
PCT No.: PCT/EP2001/014928 :
Int. Filing Date: 18 December 2001 : DECISION
Priority Date: 20 December 2000 :
Attorney Docket No.: 4-31686A :
For: Histone Deacetylase-Related Gene And Protein :

This is with regard to the petitions under 37 CFR 1.181 to withdraw the holding of abandonment, and the petition under 37 CFR 1.137(b), filed on 22 December 2006.

## BACKGROUND

This international application was filed on 18 December 2001, designated the United States, and claimed an earliest priority date of 20 December 2000. The International Bureau transmitted a copy of the published international application to the USPTO on 27 June 2002. Accordingly, the 30 month time period for paying the basic national fee in the United States expired at midnight on 20 June 2003. Applicants timely filed *inter alia* the basic national fee on 19 June 2003.

On 10 July 2003, applicants filed a declaration and the surcharge under 37 CFR 1.492(e) then in effect.

On 28 October 2003, a Notification Of Missing Requirements (Form PCT/DO/EO/905) was mailed to counsel, requiring the submission of an oath or declaration compliant with 37 CFR 1.497(a) and (b) and referring to the surcharge under 37 CFR 1.492(e).

On 04 November 2003, applicants filed a response, including a declaration.

On 02 December 2003, a Notice of Acceptance (Form PCT/DO/EO/903) was mailed.

On 19 June 2006, a Notification of Defective Response (Form PCT/DO/EO/916) was mailed, requiring submission of certain requirements related to the sequence listing. In addition, the Notice of Acceptance mailed on 02 December 2003 was withdrawn.

On 22 November 2006, a Notification of Abandonment (Form PCT/DO/EO/909) was mailed to counsel, indicating that this international application had become abandoned with respect to the national stage in the United States for failure to timely reply to the "Notification of Missing Requirements (Form PCT/DO/EO/922) mailed on 10/28/2003."

## DISCUSSION

*Petition Under 37 CFR 1.181*

Petitioner requests withdrawal of the holding of abandonment, on the basis that applicants timely replied to the Notification of Missing Requirements, and that the Notification of Defective Response mailed on 19 June 2006 was improper.

Review of the record reveals that the declaration filed on 10 July 2003 satisfied the requirements of 37 CFR 1.497(a) and (b), and that it was accompanied by the surcharge under 37 CFR 1.492(e) then in effect. Accordingly, the Notification of Missing Requirements mailed on 28 October 2003 was issued in error, and it is hereby **VACATED**.

The Notification of Defective Response mailed on 19 June 2006 referred to requirements (related to the sequence listing) which were not required previously. Accordingly, it was issued in error, and it is hereby **VACATED**. Accordingly, the Notification of Abandonment mailed on 22 November 2006 was also issued in error, and it is hereby **VACATED**. The holding of abandonment is **WITHDRAWN**.

*Petition Under 37 CFR 1.137(b)*

The petition under 37 CFR 1.137(b) was unnecessary in view of the foregoing discussion. The $1500.00 petition fee will be refunded to applicants.

## DECISION

The petition under 37 CFR 1.181 is **GRANTED**.

The petition under 37 CFR 1.137(b) is **DISMISSED AS MOOT**, without prejudice.

This application is being returned to the Office of Patent Application Processing. The electronic records of the USPTO (PALM) will be corrected to show the application status to be pending, not abandoned. Its date under 35 U.S.C. 371(c)(1), (2) and (4) is **10 July 2003**.

/George Dombroske/
George Dombroske
PCT Legal Examiner
Office of PCT Legal Administration
Tel: (571) 272-3283

UNITED STATES PATENT AND TRADEMARK OFFICE

Commissioner for Patents
United States Patent and Trademark Office
P.O. Box 1450
Alexandria, VA 22313-1450
www.uspto.gov

DLA PIPER LLP (US)
4365 EXECUTIVE DRIVE
SUITE 1100
SAN DIEGO CA 92121-2133

**MAILED**

NOV 17 2010

OFFICE OF PETITIONS

| | | |
|---|---|---|
| In re Patent No. 7,754,876 | : | |
| Issue Date: July 13, 2010 | : | |
| Application No. 10/451,347 | : | DECISION ON PETITION |
| Filed: February 6, 2004 | : | |
| Attorney Docket No. BALD1120 | : | |

This is a decision on the Request For Certificate Of Correction Under 37 C.F.R. §1.323, filed September 20, 2010, which is being treated as a Petition Under 37 CFR 3.81(b) to add – Commonwealth Scientific and Industrial Research Organisation and University; and University of Western Sydney-- as the additional assignees to the Title Page of the Patent via a Certificate of Correction.

The petition under 37 CFR §3.81(b) is **DISMISSED**.

Petitioner requests that the present Petition was submitted to add the omitted --Commonwealth Scientific and Industrial Research Organisation, Campbell (AU); and University of Western Sydney, Richmond (AU)-- on the previously submitted PTOL-85B.

37 CFR 3.81(b), effective June 25, 2004, reads:

> *After payment of the issue fee:* Any request for issuance of an application in the name of the assignee submitted after the date of payment of the issue fee, and any request for a patent to be corrected to state the name of the assignee, must state that the assignment was submitted for recordation as set forth in § 3.11 before issuance of the patent, and must include a request for a certificate of correction under § 1.323 of this chapter (accompanied by the fee set forth in § 1.20(a) and the processing fee set forth in § 1.17(i) of this chapter.

U.S. Patent and Trademark Office assignments records disclose that a corrective assignment *Commonwealth Scientific and Industrial Research Organisation; University of Western Sydney and Dairy Australia Limited.* was submitted for recordation on September 2, 2010. Therefore, the corrective recorded assignment was **after the date of issuance of this patent**. Accordingly, since the corrective assignment was not submitted for recordation until after issuance of this patent, issuance of a certification of correction would not be proper.

Inquiries related this communication should be directed to the undersigned at (571)272-3213.

Cheryl Gibson-Baylor
Petitions Examiner
Office of Petitions

UNITED STATES PATENT AND TRADEMARK OFFICE

Commissioner for Patents
United States Patent and Trademark Office
P.O. Box 1450
Alexandria, VA 22313-1450
www.uspto.gov

DLA PIPER LLP (US)
4365 EXECUTIVE DRIVE
SUITE 1100
SAN DIEGO CA 92121-2133

**MAILED**

MAR 21 2011

**OFFICE OF PETITIONS**

In re Patent No. 7,754,876 :
Issue Date: July 13, 2010 :
Application No. 10/451,347 : DECISION ON PETITION
Filed: February 6, 2004 :
Attorney Docket No. BALD1120 :

This is a decision on the Renewed Petition For Request For Certificate Of Correction Under 37 C.F.R. §3.81(b), filed December 29, 2010 to add --Commonwealth Scientific and Industrial Research Organisation and University; and University of Western Sydney-- as the additional assignee to the Title Page of the Patent via a Certificate of Correction.

The renewed petition under 37 CFR §3.81(b) is **DISMISSED**.

Petitioner urges "that the assignment submitted for corrective recordation on September 2, 2010 is the same assignment submitted for recordation on August 13, 2009, prior to the date of issuance". Contrary to requestor's statement, U.S. Patent and Trademark Office (USPTO) records shows that the corrective assignment on September 2, 2010, included a different cover sheet and two(2) additional pages of assignment documents. As such, these documents were not identical to the assignment documents recorded on August 13, 2009.

Despite the content of the actual assignment documents being recorded, the USPTO will not determine the validity thereof prior to recording. It is the information listed on the recordation Cover Sheet that must be complete because it is the Cover Sheet information that is recorded as it exactly appears on the Cover Sheet. The Office does not compare the Cover Sheet with the assignment document (or other document affecting title). Accordingly, the renewed petition can not be granted as requested.

Inquiries related this communication should be directed to the undersigned at (571)272-3213.

Cheryl Gibson-Baylor
Petitions Examiner
Office of Petitions

UNITED STATES PATENT AND TRADEMARK OFFICE

Commissioner for Patents
United States Patent and Trademark Office
P.O. Box 1450
Alexandria, VA 22313-1450
www.uspto.gov

Date :June 24, 2011

Patent No. :7862803
Inventor(s) :Sylvain Kravtchenko et al.
Issued :January 4, 2011
Title :OXIDIZING COMPOSITION FOR TEATING KERATINOUS MATERIALS BASED :ON AMPHPHILIC POLYMERS OF AT LEAST AN ETHYLENICALLY :UNSATURATED MONOMER WITH SULPHONIC GROUP AND COMPRISING A :HYDROPHOBIC PART

Consideration has been given your request for the issuance of a certificate of correction for the above identified patent.

Accordingly, applicants' proposed request filed June 16, 2011 has been reviewed and considered unwarranted. The change as presented in the Letters Patent was the result of an Examiners Amendment made in accordance with permissible amendments as defined in MPEP 1302.04.

Accordingly, with respect to the above itt has been determined that the Letters Patent with regard to applicants request is printed in accordance with the records within the Patent and Trademark and is therefore not warranted correction under 37 CFR 1.322.

In view of the forgoing your request in this matter is hereby denied.

Further correspondence should be directed to Decisions and Certificate of Correction Branch. Any telephone inquiries concerning this communication should be directed to Ms. A. Green at (571) 272-9005.

Mary Diggs, Supervisor
Decisions & Certificates
of Correction Branch
(703) 756-1580 or (571) 272-9005

Oblon, Spivak, McClelland, Maier
& Neustadt, L.L.P.
Richard L. Treanor
1940 Duke Street
Alexandriak, VA 22314

/arg

## SPE RESPONSE FOR CERTIFICATE OF CORRECTION

DATE : 08-09-11

TO SPE OF : ART UNIT 1619

SUBJECT : Request for Certificate of Correction for Appl. No.: 10/451409 Patent No.: 7862803

CofC mailroom date: 7-27-11

Please respond to this request for a certificate of correction within 7 days.

**FOR IFW FILES:**

Please review the requested changes/corrections as shown in the **COCIN** document(s) in the IFW application image. No new matter should be introduced, nor should the scope or meaning of the claims be changed.

Please complete the response (see below) and forward the completed response to scanning using document code **COCX**.

**FOR PAPER FILES:**

Please review the requested changes/corrections as shown in the attached certificate of correction. Please complete this form (see below) and forward it with the file to:

Certificates of Correction Branch (CofC)
Randolph Square – 9D10-A
Palm Location 7580

Note: _____

Angela Green 571.272.9005
CofC Branch 703-756-1814

Thank You For Your Assistance

**The request for issuing the above-identified correction(s) is hereby:**
Note your decision on the appropriate box.

- [X] **Approved** — All changes apply.
- [ ] **Approved in Part** — Specify below which changes **do not** apply.
- [ ] **Denied** — State the reasons for denial below.

Comments: _____

SPE /David J. Blanchard/ Art Unit 1619

UNITED STATES PATENT AND TRADEMARK OFFICE

Commissioner for Patents
United States Patent and Trademark Office
P.O. Box 1450
Alexandria, VA 22313-1450
www.uspto.gov

CPA Global
c/o Compute Patent Annuities North America
225 Reinekers Lane
Suite 400
Alexandria, VA 22314

MAILED
AUG 03 2010
OFFICE OF PETITIONS

In re Patent No. 7,037,353 :
Issued: May 2, 2006 :
Application No.: 10/451,424 : ON PETITION
Filed: December 10, 2003 :
Attorney Docket No: **Q75701** :

This is a regarding the communication filed December 14, 2009.

The request is acknowledged and dismissed as moot.

A review of the file history reveals that the 3.5-year maintenance was paid on November2, 2009, at the large entity rate of $980.00. On November 4, 2009, a "Notice of Special Acceptance of Patent Maintenance Fee" was mailed indicating that USPTO records noted the inventive entity as having large entity status, but the payment submitted was at the small entity rate. The notice indicated that the 3.5-year maintenance fee would be charged at the large entity rate, but that patentee could later request a refund of the overpaid amounts if patentee was, in fact, a small entity.

On December 14, 2009, patentee filed the instant communication indicating that patentee was unsure whether or not it is a small entity and authorized the 3.5 year maintenance fee to be charged at the large entity rate.

A review of Office finance records reveals that the amount of $980.00 was charged to a deposit account for the 3.5-year maintenance fee at the large entity rate. There does not appear to be any further remedy that can provided. The request is dismissed as moot, accordingly.

Any further questions regarding the 3.5-year maintenance fee payment should be directed to the Maintenance Fee Department or the Office of Finance.

Telephone inquiries regarding this decision should be directed to the undersigned at (571) 272-3222.

/Kenya A. McLaughlin/

Kenya A. McLaughlin
Petitions Attorney
Office of Petitions

UNITED STATES PATENT AND TRADEMARK OFFICE

Commissioner for Patents
United States Patent and Trademark Office
P.O. Box 1450
Alexandria, VA 22313-1450
www.uspto.gov

Law Offices of Karl Hormann
P O Box 381516
Cambridge MA 02238-1516

RECEIVED
ODM
JAN 24 2011

In re Application of
TAN, TJHING-LOK et al.
Application No.: 10/451,518
Filing or 371(c) Date: June 20, 2003
Attorney Docket Number: 020548-US

DECISION ON PETITION

This is a decision on the Petition to Withdraw Holding of Abandonment received in the United States Patent and Trademark Office (USPTO) on July 6 and July 9, 2007.

This petition is **GRANTED**.

The application was held abandoned for failure to timely submit the Issue Fee and Publication fee as required by the Notice of Allowance, mailed March 1, 2007 which set forth a three (3) month statutory period of reply. The Notice of Abandonment was mailed on June 25, 2007.

Petitioner states that the issue fee transmittal and payment were timely filed via the USPTO. Petitioner submitted a copy of the original submission which included a properly completed Certificate of Mailing/Transmission.

In view of the foregoing, the holding of abandonment for failure to timely pay the issue fee is hereby withdrawn and the application restored to pending status.

Telephone inquiries concerning this matter should be directed to the undersigned at (703) 756-1547.

Kay D. Pinkney
Application Assistance Unit
Office of Data Management

UNITED STATES PATENT AND TRADEMARK OFFICE

Commissioner for Patents
United States Patent and Trademark Office
P.O. Box 1450
Alexandria, VA 22313-1450
www.uspto.gov

Ipan Intellectual Property Associates Ne
Munchener Strasse 14
D-85540 Munich
**GERMANY**

**MAILED**

MAR 07 2012

**OFFICE OF PETITIONS**

| | | |
|---|---|---|
| In re Patent of Manfred Vogel | : | |
| Patent No. 7,325,305 | : | |
| Issue Date: February 5, 2008 | : | Letter |
| Application No. 10/451,798 | : | |
| Int'l Filing Date: January 14, 2002 | : | |
| Attorney Docket No. P69027US0 | : | |

This is a letter responding to a communication filed January 12, 2012, which is being treated as a request for the acceptance of a fee deficiency submission under 37 CFR 1.28(c).

The deficiency payment of $640 is hereby accepted.

The change of status to large entity has been entered and made of record.

Telephone inquiries regarding this communication should be directed to Petitions Attorney Steven Brantley at (571) 272-3203.

Charles Steven Brantley
Senior Petitions Attorney
Office of Petitions

UNITED STATES PATENT AND TRADEMARK OFFICE

Commissioner for Patents
United States Patent and Trademark Office
P.O. Box 1450
Alexandria, VA 22313-1450
www.uspto.gov

Browdy and Neimark PLLC
624 Ninth Street, NW
Suite 300
Washington DC 20001-5303

MAILED
SEP 29 2010
OFFICE OF PETITIONS

| | |
|---|---|
| In re Patent No. 7,445,802<br>Rabinkov<br>Issue Date: October 4, 2008<br>Application No. 10/451,849<br>Filed: December 31, 2003<br>Attorney Docket No. Rabinkov1A<br>Title: Site-specific in Situ Generation of Allicin Using a Target Allinase Delivery System for the Treatment of Cancers, Tumors, Infectious Disease and other Allicin-Sensitive Diseases | DECISION UPON REMAND AND RECONSIDERATION OF PATENT TERM ADJUSTMENT AND NOTICE OF INTENT TO ISSUE CERTIFICATE OF CORRECTION |

This is a decision following remand from the District Court for the District of Columbia regarding the patent term adjustment indicated on the above-identified patent. The Court remanded this matter to the U.S. Patent and Trademark Office for recalculation of the patent term adjustment in accordance with the decision in Wyeth & Elan Pharma Int'l Ltd. v. Kappos, 591 F.3d 1364 (Fed. Cir. 2010).

The Office notes that patentee's calculation did not rely on the date of commencement to calculate the "B" delay. The Office calculated the "B" delay to be 862 days rather than applicant calculated delay of "674" days cited in the complaint. Accordingly, the patent term adjustment is the following: 431 "A" delay + 862 days of "B" delay + 0 days of "C" delay- 1 day of overlap -80 days of applicant delay= 1212 days

The patent term adjustment indicated on the above-identified patent has been recalculated as directed by the Court. The term of the above-identified patent is extended or adjusted by twelve hundred and twelve (1212) days.

The application is being forwarded to the Certificates Branch for issuance of a certificate of correction indicating that the term of the above-identified patent is extended or adjusted by twelve hundred and twelve (1212) days.

Telephone inquiries specific to this matter should be directed to Senior Legal Advisor Kery A. Fries at (571) 272-7757.

/Kery A. Fries/

Kery Fries
Senior Legal Advisor Attorney
Office of Patent Legal Administration
Office of Associate Commissioner
For Patent Examination Policy

Enclosure: Copy of DRAFT Certificate of Correction

UNITED STATES PATENT AND TRADEMARK OFFICE

# CERTIFICATE OF CORRECTION

PATENT : 7,445,802

DATED : **November 04, 2008** **DRAFT**

INVENTOR(S) : Rabinkov et al

It is certified that error appears in the above-identified patent and that said Letters Patent is hereby corrected as shown below:

On the cover page,

[*] Notice: Subject to any disclaimer, the term of this patent is extended or adjusted under 35 USC 154(b) by 594 days

Delete the phrase "by 594" and insert – by 1212 days--

Day : Wednesday

PALM INTRANET

Date: 9/29/2010
Time: 12:20:11

| PTA Calculations for Application: 10/451849 | | | |
|---|---|---|---|
| Application Filing Date: | 12/31/2003 | PTO Delay (PTO): | 674 |
| Issue Date of Patent: | 11/04/2008 | Three Years: | 0 |
| Pre-Issue Petitions: | 0 | Applicant Delay (APPL): | 80 |
| Post-Issue Petitions: | 0 | Total PTA (days): | 1212 |
| PTO Delay Adjustment: | 618 | | |

**File Contents History**

| Number | Date | Contents Description | PTO | APPL | START |
|---|---|---|---|---|---|
| 72 | 09/29/2010 | ADJUSTMENT OF PTA CALCULATION BY PTO | 618 | | |
| 65.5 | 10/15/2008 | PTA 36 MONTHS | 243 | | |
| 65 | 11/04/2008 | PATENT ISSUE DATE USED IN PTA CALCULATION | 1 | | 54 |
| 64 | 10/10/2008 | EXPORT TO FINAL DATA CAPTURE | | | |
| 63 | 10/09/2008 | FINISHED INITIAL DATA CAPTURE | | | |
| 62 | 10/09/2008 | DISPATCH TO FDC | | | |
| 61 | 09/26/2008 | APPLICATION IS CONSIDERED READY FOR ISSUE | | | |
| 60 | 09/26/2008 | WORKFLOW - QUERY REQUEST - FINISH | | | |
| 59 | 09/22/2008 | TC RETURN TO PUBS | | | |
| 58 | 09/22/2008 | MAIL EXAMINER'S AMENDMENT | | | |
| 57 | 09/18/2008 | EXAMINER'S AMENDMENT COMMUNICATION | | | |
| 56 | 07/31/2008 | MAIL PUB ACKNOWLEDGEMENT OF FOREIGN PRIORITY PAPERS | | | |
| 55 | 07/31/2008 | PUB ACKNOWLEDGEMENT OF FOREIGN PRIORITY PAPERS | | | |
| 54 | 07/03/2008 | ISSUE FEE PAYMENT VERIFIED | | | |
| 53 | 07/03/2008 | ISSUE FEE PAYMENT RECEIVED | | | |
| 52 | 04/24/2008 | PUBS CASE REMAND TO TC | | | |
| 51 | 04/29/2008 | WORKFLOW - QUERY REQUEST - BEGIN | | | |
| 50 | 04/07/2008 | EXPORT TO INITIAL DATA CAPTURE | | | |
| 48 | 04/03/2008 | MAIL NOTICE OF ALLOWANCE | | | |
| 47 | 04/01/2008 | ISSUE REVISION COMPLETED | | | |
| 46 | 04/01/2008 | NOTICE OF ALLOWANCE DATA VERIFICATION COMPLETED | | | |
| 45 | 04/01/2008 | CASE DOCKETED TO EXAMINER IN GAU | | | |

| | | | | | |
|---|---|---|---|---|---|
| 44 | 03/31/2008 | DOCUMENT VERIFICATION | | | |
| 43 | 03/31/2008 | EXAMINER'S AMENDMENT COMMUNICATION | | | |
| 42 | 03/31/2008 | NOTICE OF ALLOWABILITY | | | |
| 39 | 03/01/2008 | DATE FORWARDED TO EXAMINER | | | |
| 38 | 02/20/2008 | AMENDMENT AFTER FINAL REJECTION | | 19 | 36 |
| 37 | 02/20/2008 | REQUEST FOR EXTENSION OF TIME - GRANTED | | | |
| 36 | 11/01/2007 | MAIL FINAL REJECTION (PTOL - 326) | | | |
| 35 | 10/29/2007 | FINAL REJECTION | | | |
| 34 | 08/20/2007 | DATE FORWARDED TO EXAMINER | | | |
| 33 | 08/13/2007 | RESPONSE AFTER NON-FINAL ACTION | | 61 | 29 |
| 32 | 08/13/2007 | REQUEST FOR EXTENSION OF TIME - GRANTED | | | |
| 31 | 12/31/2003 | INFORMATION DISCLOSURE STATEMENT CONSIDERED | | | |
| 30 | 12/31/2003 | INFORMATION DISCLOSURE STATEMENT (IDS) FILED | | | |
| 29 | 03/13/2007 | MAIL NON-FINAL REJECTION | | | |
| 28 | 03/05/2007 | NON-FINAL REJECTION | | | |
| 27 | 12/08/2006 | MISCELLANEOUS INCOMING LETTER | | | |
| 26 | 12/20/2006 | DATE FORWARDED TO EXAMINER | | | |
| 25 | 12/08/2006 | RESPONSE AFTER NON-FINAL ACTION | | | |
| 24 | 09/08/2006 | MAIL NON-FINAL REJECTION | | | |
| 23 | 09/05/2006 | NON-FINAL REJECTION | | | |
| 22 | 07/10/2006 | DATE FORWARDED TO EXAMINER | | | |
| 21 | 07/05/2006 | RESPONSE TO ELECTION / RESTRICTION FILED | | | |
| 20 | 07/05/2006 | REQUEST FOR EXTENSION OF TIME - GRANTED | | | |
| 19 | 05/04/2006 | MAIL RESTRICTION REQUIREMENT | 430 | | -1 |
| 18 | 05/01/2006 | REQUIREMENT FOR RESTRICTION / ELECTION | | | |
| 17 | 04/18/2006 | CASE DOCKETED TO EXAMINER IN GAU | | | |
| 16 | 12/27/2004 | MISCELLANEOUS INCOMING LETTER | | | |
| 15 | 02/24/2004 | REFERENCE CAPTURE ON IDS | | | |
| 14.7 | 02/24/2004 | INFORMATION DISCLOSURE STATEMENT (IDS) FILED | | | |
| 14 | 02/24/2004 | INFORMATION DISCLOSURE STATEMENT (IDS) FILED | | | |
| 13 | 03/12/2004 | CASE DOCKETED TO EXAMINER IN GAU | | | |
| 12 | 03/10/2004 | IFW AMENDED CASE PROCESSING COMPLETE | | | |
| 11 | 01/21/2004 | PRELIMINARY AMENDMENT | | | |
| 10 | 03/04/2004 | CLEARED BY OIPE CSR | | | |
| | | | | | |

| | | | | | |
|---|---|---|---|---|---|
| 9 | 12/31/2003 | 371 COMPLETION DATE | | | |
| 8 | 01/12/2004 | APPLICATION DISPATCHED FROM OIPE | | | |
| 7 | 01/12/2004 | NOTICE OF DO/EO ACCEPTANCE MAILED | | | |
| 6 | 12/31/2003 | ADDITIONAL APPLICATION FILING FEES | | | |
| 5 | 12/31/2003 | INFORMATION DISCLOSURE STATEMENTS | | | |
| 4 | 12/31/2003 | PRELIMINARY AMENDMENTS | | | |
| 3 | 12/31/2003 | A STATEMENT BY ONE OR MORE INVENTORS SATISFYING THE REQUIREMENT UNDER 35 USC 115, OATH OF THE APPLIC | | | |

**Search Another: Application#** Search

**EXPLANATION OF PTA CALCULATION**

**EXPLANATION OF PTE CALCULATION**

To go back, right click here and select Back. To go forward, right click here and select Forward. To refresh, right click here and select Refresh.

Back to OASIS | Home page

UNITED STATES PATENT AND TRADEMARK OFFICE

Commissioner for Patents
United States Patent and Trademark Office
P.O. Box 1450
Alexandria, VA 22313-1450
www.uspto.gov

CROWELL & MORING, LLP
INTELLECTUAL PROPERTY GROUP
PO BOX 14300
WASHINGTON, DC 20044-4300

MAILED
OCT 01 2010
OFFICE OF PETITIONS

In re Patent No. 7,439,121 :
Issue Date: October 21, 2008 :
Application No. 10/451,925 : ON PETITION
Filed: June 27, 2003 :
Attorney Docket No. 010986.52550US :

This is a decision on the petition filed August 27, 2010, which is being treated as a request under 37 CFR 3.81(b)[1] to correct the name of the assignee on the front page of the above-identified patent by way of a Certificate of Correction.

The request is **GRANTED**.

Telephone inquiries concerning this decision may be directed to the April M. Wise at (571) 272-1642. Inquiries regarding the issuance of a certificate of correction should be directed to the Certificate of Correction Branch at (571) 272-4200.

The Certificates of Correction Branch will be notified of this decision granting the petition under 37 CFR 3.81(b) and directing issuance of the requested Certificate of Correction.

/Carl Friedman/
Carl Friedman
Petitions Examiner
Office of Petitions

[1] *See* MPEP 1309, subsection II; and Official Gazette of June 22, 2004.

UNITED STATES PATENT AND TRADEMARK OFFICE

Commissioner for Patents
United States Patent and Trademark Office
P.O. Box 1450
Alexandria, VA 22313-1450
www.uspto.gov

MAILED

AUG 03 2010

OFFICE OF PETITIONS

MBHB/TRADING TECHNOLOGIES
300 SOUTH WACKER DRIVE
SUITE 3200
CHICAGO IL 60606

| | | |
|---|---|---|
| In re Application of | : | |
| Jens-Uwe Schluetter | : | |
| Application No. 10/452,032 | : | ON APPLICATION FOR |
| Filed: May 30, 2003 | : | PATENT TERM ADJUSTMENT |
| Atty Docket No.02-1242-B | : | |

This is in response to the "REQUEST TO CORRECT THE PATENT TERM ADJUSTMENT CALCULATION" filed April 1, 2010. The petition is properly treated under 37 CFR 1.705(b). Applicant submits that the patent term adjustment to be indicated on the patent is one thousand five hundred and seventy-seven (1,577) days, not nine hundred and sixty (960) days as calculated by the Office as of the mailing of the initial determination of patent term adjustment. Applicants request this correction, in part, on the basis that the Office will take in excess of three years to issue this patent.

As the instant application for patent term adjustment requests reconsideration of the patent term adjustment as it relates to the Office's failure to issue the patent within 3 years of the filing date, the application for patent term adjustment under 37 CFR 1.705(b) is **DISMISSED as PREMATURE**.

Knowledge of the actual date the patent issues is required to calculate the amount, if any, of additional patent term patentee is entitled to for Office failure to issue the patent within 3 years. See § 1.702(b). (This is true even where a request for continued examination (RCE) was filed). The computer will not undertake the § 1.702(b) calculation until the actual date of issuance of the patent has been determined. Likewise, the computer will not calculate any further Office delay under § 1.702(a)(4) or applicant delay under § 1.704(c)(10) until the actual date of issuance of the patent has been determined. As such, the Office can not make a determination on the correctness of the patent term adjustment until the patent has issued.

Requesting reconsideration of the patent term adjustment to be indicated on the patent under 37 CFR 1.705(b) based on the initial determination of patent term adjustment and a projected issuance date of the patent (or even the filing date of the request for continued examination) is premature. Accordingly, it is appropriate to dismiss as premature such a request.

Rather than file an application for patent term adjustment under 37 CFR 1.705(b) contesting the 37 CFR 1.702(b) calculation at the time of the mailing of the notice of allowance, applicants are advised that they may wait until the time of the issuance of the patent and file a request for reconsideration of the patent term adjustment pursuant to 37 CFR 1.705(d). As the USPTO does not calculate the amount of time earned pursuant to 37 CFR 1.702(b) until the time of the issuance of the patent, the Office will consider any request for reconsideration of the patent term adjustment due to an error in the calculation of 37 CFR 1.702(b) to be timely if the request for reconsideration is filed within two months of the issuance of the patent. However, as to all other bases for contesting the initial determination of patent term adjustment received with the notice of allowance, applicants must timely file an application for patent term adjustment prior to the payment of the issue fee[1].

It is noted that any period of adjustment will be entered in light of 35 U.S.C. 154(B) GUARANTEE OF NO MORE THAN 3-YEAR APPLICATION PENDENCY, which provides that:

> Subject to the limitations under paragraph (2), if the issue of an original patent is delayed due to the failure of the United States Patent and Trademark Office to issue a patent within 3 years after the actual filing date of the application in the United States, not including –

---

[1] For example, if applicant disputes both the calculation of patent term adjustment under 37 CFR 1.702(a)(1) for Office failure to mail a first Office action or notice of allowance not later than fourteen months after the date on which the application was filed and under 37 CFR 1.702(b) for Office failure to issue a patent within three years of the actual filing date of the application, then applicant must still timely file an application for patent term adjustment prior to the payment of the issue fee to contest the calculation of Office delay in issuing a first Office action or notice of allowance. See 37 CFR 1.705(b) and 35 U.S.C. 154(b)(3)(B). A dispute as to the calculation of the §1.702(a)(1) period raised on request for reconsideration of patent term adjustment under 37 CFR 1.705(d) will be dismissed as untimely filed.

(i) any time consumed by continued examination of the application requested by the applicant under section 132(b);

It is further noted that a Request for Continued Examination (RCE) was filed in this application on June 29, 2009.

To the extent that applicants otherwise requests reconsideration of the patent term adjustment at the time of the mailing of the notice of allowance, the application for patent term adjustment is **granted to the extent indicated herein**.

The Office has updated the PALM and PAIR screens to reflect that the Patent Term Adjustment (PTA) determination at the time of mailing of the Notice of Allowance is nine hundred and sixty-two (962) days. A copy of the updated PALM screen, showing the corrected determination, is enclosed.

On January 6, 2010, the Office mailed the Determination of Patent Term Adjustment under 35 U.S.C. 154(b) in the above-identified application. The Notice stated that the patent term adjustment to date is 960 days. Applicants timely filed the instant application for patent term adjustment[2].

Applicant disputes the reduction to the patent term adjustment of 2 days entered pursuant to 37 CFR 1.704(c)(8) for the filing of a terminal disclaimer on September 16, 2009. Applicant states that the terminal disclaimer was filed on September 16, 2008, with a response to a non-final Office action filed in that same date. Applicant further asserts that Office records indicate the terminal disclaimer was filed on September 18, 2009, when, in fact, the terminal disclaimer was filed on September 16, 2009. Accordingly, the entry of 2 days of reduction to the patent term adjustment under 37 CFR 1.704(c)(8) was unwarranted.

Applicant's argument has been considered and is well taken. A review of the record reveals that a response to the non-final Office action mailed September 15, 2009, was filed September 16, 2009, and that the response was accompanied by the terminal

[2] The issue fee was paid on April 1, 2010. Accordingly, applicant timely filed the instant request for reconsideration of the patent term adjustment pursuant to 37 CFR 1.705(b).

disclaimer. Further, it is noted that Office PALM records incorrectly cite the date the terminal disclaimer was filed as September 18, 2009, although the Image File Wrapper for the application indicates that terminal disclaimer was of record on September 16, 2009. The evidence is convincing that the terminal disclaimer was received on September 16, 2009, and, as such, does not warrant a reduction to the patent term adjustment of 2 days pursuant to 37 CFR 1.704(c)(8). Accordingly, the period of reduction of 2 days is being removed.

Deposit account 13-2490 will be charged $200.00 for the fee set forth in 37 CFR 1.18(e) for consideration of the application for patent term adjustment under 37 CFR 1.705(b).

Applicants are reminded that any delays by the Office pursuant to 37 CFR 1.702(a)(4) and 1.702(b) and any applicant delays under 37 CFR 1.704(c)(10) will be calculated at the time of the issuance of the patent and applicants will be notified in the Issue Notification letter that is mailed to applicants approximately three weeks prior to issuance.

Any request for reconsideration of the patent term adjustment indicated on the patent must be timely filed within 2 months after issuance pursuant to 37 CFR 1.705(d) and must include payment of the required fee under 37 CFR 1.18(e).

Telephone inquiries specific to this decision should be directed to Kenya A. McLaughlin, Petitions Attorney, at (571) 272-3222.

Anthony Knight
Director
Office of Petitions

Enclosure: Copy of REVISED PAIR Screen

Day : Thursday
Date: 7/29/2010

# PALM INTRANET

Time: 13:58:54

| PTA Calculations for Application: 10/452032 | | | |
|---|---|---|---|
| Application Filing Date: | 05/30/2003 | PTO Delay (PTO): | 1180 |
| Issue Date of Patent: | | Three Years: | 0 |
| Pre-Issue Petitions: | 0 | Applicant Delay (APPL): | 220 |
| Post-Issue Petitions: | 0 | Total PTA (days): | 962 |
| PTO Delay Adjustment: | 2 | | |

**File Contents History**

| Number | Date | Contents Description | PTO | APPL | START |
|---|---|---|---|---|---|
| 92 | 07/29/2010 | ADJUSTMENT OF PTA CALCULATION BY PTO | 2 | | |
| 70 | 01/06/2010 | MAIL NOTICE OF ALLOWANCE | | | |
| 69 | 12/07/2009 | ISSUE REVISION COMPLETED | | | |
| 68 | 12/07/2009 | DOCUMENT VERIFICATION | | | |
| 67 | 12/07/2009 | NOTICE OF ALLOWANCE DATA VERIFICATION COMPLETED | | | |
| 66 | 12/07/2009 | CASE DOCKETED TO EXAMINER IN GAU | | | |
| 65 | 11/23/2009 | EXAMINER INTERVIEW SUMMARY RECORD (PTOL - 413) | | | |
| 64 | 12/07/2009 | EXAMINER'S AMENDMENT COMMUNICATION | | | |
| 63 | 12/07/2009 | NOTICE OF ALLOWABILITY | | | |
| 62 | 09/30/2009 | DATE FORWARDED TO EXAMINER | | | |
| 61 | 09/16/2009 | RESPONSE AFTER NON-FINAL ACTION | | | |
| 60 | 09/24/2009 | PARALEGAL TD ACCEPTED | | | |
| 59 | 09/18/2009 | TERMINAL DISCLAIMER FILED | | 2 | 61 |
| 58 | 09/15/2009 | ELECTRONIC REVIEW | | | |
| 57 | 09/15/2009 | EMAIL NOTIFICATION | | | |
| 56 | 09/15/2009 | MAIL NON-FINAL REJECTION | | | |
| 55 | 09/10/2009 | NON-FINAL REJECTION | | | |
| 54 | 06/29/2009 | INFORMATION DISCLOSURE STATEMENT CONSIDERED | | | |
| 53 | 06/29/2009 | REFERENCE CAPTURE ON IDS | | | |
| 52 | 06/29/2009 | INFORMATION DISCLOSURE STATEMENT (IDS) FILED | | 0 | 50 |
| 51 | 07/14/2009 | DATE FORWARDED TO EXAMINER | | | |
| 50 | 06/29/2009 | REQUEST FOR CONTINUED EXAMINATION (RCE) | | 33 | 41 |

| | | | | | |
|---|---|---|---|---|---|
| 49 | 07/14/2009 | DISPOSAL FOR A RCE / CPA / R129 | | | |
| 48 | 06/29/2009 | REQUEST FOR EXTENSION OF TIME - GRANTED | | | |
| 47 | 06/29/2009 | INFORMATION DISCLOSURE STATEMENT (IDS) FILED | | | |
| 46 | 06/29/2009 | WORKFLOW - REQUEST FOR RCE - BEGIN | | | |
| 45 | 05/04/2009 | MAIL ADVISORY ACTION (PTOL - 303) | | | |
| 44 | 05/02/2009 | ADVISORY ACTION (PTOL-303) | | | |
| 43 | 04/21/2009 | DATE FORWARDED TO EXAMINER | | | |
| 42 | 04/16/2009 | AMENDMENT AFTER FINAL REJECTION | | | |
| 41 | 02/27/2009 | MAIL FINAL REJECTION (PTOL - 326) | | | |
| 40 | 02/27/2009 | FINAL REJECTION | | | |
| 39 | 12/21/2008 | DATE FORWARDED TO EXAMINER | | | |
| 38 | 12/11/2008 | RESPONSE TO ELECTION / RESTRICTION FILED | | | |
| 37 | 11/26/2008 | MAIL RESTRICTION REQUIREMENT | 1 | | 33 |
| 36 | 11/24/2008 | REQUIREMENT FOR RESTRICTION / ELECTION | | | |
| 35 | 06/03/2008 | INFORMATION DISCLOSURE STATEMENT CONSIDERED | | | |
| 34 | 09/21/2008 | DATE FORWARDED TO EXAMINER | | | |
| 33 | 07/25/2008 | RESPONSE AFTER NON-FINAL ACTION | | 154 | 28 |
| 32 | 06/03/2008 | ELECTRONIC INFORMATION DISCLOSURE STATEMENT | | | |
| 31 | 06/25/2008 | MAIL NOTICE OF INFORMAL OR NON-RESPONSIVE AMENDMENT | | | |
| 30 | 06/03/2008 | INFORMATION DISCLOSURE STATEMENT (IDS) FILED | | | |
| 29 | 04/09/2008 | DATE FORWARDED TO EXAMINER | | | |
| 28.1 | 02/22/2008 | INFORMAL OR NON-RESPONSIVE AMENDMENT AFTER EXAMINER ACTION | | | |
| 28 | 02/22/2008 | RESPONSE AFTER NON-FINAL ACTION | | 31 | 25 |
| 27 | 02/22/2008 | REQUEST FOR EXTENSION OF TIME - GRANTED | | | |
| 26 | 01/29/2008 | CASE DOCKETED TO EXAMINER IN GAU | | | |
| 25 | 10/22/2007 | MAIL NON-FINAL REJECTION | 1179 | | -1 |
| 24 | 10/18/2007 | NON-FINAL REJECTION | | | |
| 23 | 10/15/2007 | CASE DOCKETED TO EXAMINER IN GAU | | | |
| 20 | 06/20/2007 | INFORMATION DISCLOSURE STATEMENT CONSIDERED | | | |
| 19 | 08/21/2007 | CASE DOCKETED TO EXAMINER IN GAU | | | |

| | | | | | |
|---|---|---|---|---|---|
| 18 | 07/06/2007 | CASE DOCKETED TO EXAMINER IN GAU | | | |
| 17 | 06/20/2007 | INFORMATION DISCLOSURE STATEMENT (IDS) FILED | | | |
| 16 | 06/30/2006 | CASE DOCKETED TO EXAMINER IN GAU | | | |
| 15 | 09/02/2005 | CASE DOCKETED TO EXAMINER IN GAU | | | |
| 14 | 06/22/2005 | CASE DOCKETED TO EXAMINER IN GAU | | | |
| 13 | 05/19/2004 | IFW TSS PROCESSING BY TECH CENTER COMPLETE | | | |
| 12 | 12/17/2003 | CORRESPONDENCE ADDRESS CHANGE | | | |
| 11 | 11/05/2003 | CASE DOCKETED TO EXAMINER IN GAU | | | |
| 10 | 08/06/2003 | APPLICATION RETURN FROM OIPE | | | |
| 9 | 08/06/2003 | APPLICATION IS NOW COMPLETE | | | |
| 8 | 08/06/2003 | APPLICATION RETURN TO OIPE | | | |
| 7 | 08/06/2003 | APPLICATION RETURN FROM OIPE | | | |
| 6 | 08/06/2003 | APPLICATION IS NOW COMPLETE | | | |
| 5 | 08/06/2003 | APPLICATION RETURN TO OIPE | | | |
| 4 | 08/06/2003 | APPLICATION DISPATCHED FROM OIPE | | | |
| 3 | 08/06/2003 | APPLICATION IS NOW COMPLETE | | | |
| 2 | 06/14/2003 | CLEARED BY OIPE CSR | | | |
| 1 | 05/30/2003 | INITIAL EXAM TEAM NN | | | |

**Search Another: Application#** [ ] Search

**EXPLANATION OF PTA CALCULATION**

**EXPLANATION OF PTE CALCULATION**

To go back, right click here and select Back. To go forward, right click here and select Forward. To refresh, right click here and select Refresh.

Back to OASIS | Home page

UNITED STATES PATENT AND TRADEMARK OFFICE

Commissioner for Patents
United States Patent and Trademark Office
P.O. Box 1450
Alexandria, VA 22313-1450
www.uspto.gov

DAVIS WRIGHT TREMAINE LLP - San Francisco
505 MONTGOMERY STREET
SUITE 800
SAN FRANCISCO CA 94111

MAILED
JUL 06 2011
OFFICE OF PETITIONS

In re Patent No. 7,151,964
Issue Date: 12/19/2006
Application No. 10/452,550
Filed: 05/30/2003
Attorney Docket No. 0084495-004US7

: DECISION DISMISSING PETITION
: UNDER 37 CFR 1.78(a)(3) AND
: REQUEST FOR CERTIFICATE OF
: CORRECTION
:

This is a decision on the petition under 37 CFR 1.78(a)(3), filed June 17, 2011, to add a claim under 35 U.S.C. 120 for the benefit of the prior filed nonprovisional applications by way of a certificate of correction.

The petition is **DISMISSED**.

A review of the file record fails to disclose that a claim for the benefit of the prior-filed nonprovisional applications was made within the time period set forth in 37 CFR 1.78(a)(2)(ii) and further failed to include a proper reference to the prior-filed applications as required by 37 CFR 1.78(a)(2)(i) and 1.78(a)(2)(iii).

This application was filed May 30, 2003, and issued as Patent No. 7,151,964 on December 19, 2006. As this application was filed after November 29, 2000, a petition under 37 CFR 1.78(a)(3), accompanied by certificate of correction, is the appropriate avenue of relief to accept a late claim for the benefit of a prior-filed nonprovisional application after issuance of the application into a patent. *See* MPEP 1481.

A petition for acceptance of a claim for late priority under 37 CFR 1.78(a)(3) must be accompanied by:

**(1)** the reference required by 35 U.S.C. 120 and 37 CFR 1.78(a)(2)(i) of the prior-filed application, unless previously submitted;

**(2)** the surcharge set forth in § 1.17(t); and

**(3)** a statement that the entire delay between the date the claim was due under 37 CFR 1.78(a)(2)(ii) and the date the claim was filed was unintentional. The Director may require additional information where there is a question whether the delay was unintentional.

The petition must be dismissed because the reference required by 35 U.S.C. 120 and 37 CFR 1.78(a)(2)(i) has not be properly supplied. In this instance, petitioners submitted a request for a certificate of correction to correct the patent to add the benefit claim to the prior-filed applications. However, petitioners did not also submit an ADS or amendment adding the specific reference to the prior-filed applications to the first sentence of the specification. Pursuant to 37 CFR 1.78(a)(2)(iii), the reference to the prior-filed nonprovisional applications must be included in an application data sheet (§ 1.76), or the specification must contain or be amended to contain such reference in the first sentence(s) following the title.

Moreover, the amendment submitted concurrently with the petition as drafted is unacceptable, and therefore, is not considered a proper reference under 37 CFR 1.78(a)(2)(i). In this regard, the amendment is physically part of the petition and, as such, does not comply with 37 CFR 1.121, 1.52, or 1.4(c). 37 CFR 1.121(a) states that amendments in applications are made by filing a paper, in compliance with § 1.52, directing that specified amendments be made. The pertinent section of 37 CFR 1.52 states that the claim (in this case, the benefit claim), must commence on a separate physical sheet. 37 CFR 1.4(c) states that each distinct subject must be contained in a separate paper because different matters may be considered by different branches of the United States Patent and Trademark Office.

Lastly, petitioners submitted a completed a certificate of correction form to correct the patent to add the benefit claim of the prior-filed applications only on the front page of the Letters Patent. Petitioners should also include the amendment to the specification on the Certificate of Correction to correct the patent to add the benefit claim of the prior-filed nonprovisional applications to column one, first paragraph of the specification.

Accordingly, before the petition under 37 CFR 1.78(a)(3) can be granted, petitioners must file a renewed petition under 37 CFR 1.78(a)(3), accompanied by either a signed ADS or a signed amendment in compliance with 37 CFR 1.121, 37 CFR 1.76 and 37 CFR 1.33(b),[1] and a completed certificate of correction form correcting the patent to add the benefit claim of the prior-filed nonprovisional applications on both the front page and the first paragraph of the

[1] The Office notes that 37 CFR 1.33(b) requires that amendments and other papers, except for written assertions pursuant to 37 CFR 1.27(c)(2)(ii), filed in an application must be signed by an appropriate party. Therefore, an ADS, supplemental ADS, or an amendment submitted after the filing of an application must be signed in accordance with 37 CFR 1.33(b).

specification of the Letters Patent. No additional petition fee is required for filing a renewed petition.

Further correspondence with respect to this matter should be addressed as follows:

By mail: Mail Stop PETITIONS
Commissioner for Patents
Post Office Box 1450
Alexandria, VA 22313-1450

By hand: Customer Service Window
Mail Stop Petitions
Randolph Building
401 Dulany Street
Alexandria, VA 22314

By fax: (571) 273-8300
ATTN: Office of Petitions

Correspondence may also be submitted via the Electronic Filing System of the USPTO.

Any questions concerning this matter may be directed to the undersigned at (571) 272-3211.

C. T. Donnell

Christina Tartera Donnell
Senior Petitions Attorney
Office of Petitions

UNITED STATES PATENT AND TRADEMARK OFFICE

Commissioner for Patents
United States Patent and Trademark Office
P.O. Box 1450
Alexandria, VA 22313-1450
www.uspto.gov

DAVIS WRIGHT TREMAINE LLP - San Francisco
505 MONTGOMERY STREET
SUITE 800
SAN FRANCISCO CA 94111

**MAILED**

JUL 20 2011

**OFFICE OF PETITIONS**

| | |
|---|---|
| In re Patent No. 7,151,964 | : DECISION GRANTING PETITION |
| Issue Date: 12/19/2006 | : UNDER 37 CFR 1.78(a)(3) AND |
| Application No. 10/452,550 | : REQUEST FOR CERTIFICATE OF |
| Filed: 05/30/2003 | : CORRECTION |
| Attorney Docket No. 0084495-004US7 | : |

This is a decision on the renewed petition under 37 CFR 1.78(a)(3), filed July 15, 2011, to accept the unintentionally delayed claim under 35 U.S.C. 120 for the benefit of the prior filed nonprovisional applications by way of a certificate of correction.

The petition is **GRANTED**.

A review of the file record fails to disclose that a claim for the benefit of the prior-filed nonprovisional applications was made within the time period set forth in 37 CFR 1.78(a)(2)(ii) and further failed to include a proper reference to the prior-filed applications as required by 37 CFR 1.78(a)(2)(i) and 1.78(a)(2)(iii).

This application was filed May 30, 2003, and issued as Patent No. 7,151,964 on December 19, 2006. As this application was filed after November 29, 2000, a petition under 37 CFR 1.78(a)(3), accompanied by certificate of correction, is the appropriate avenue of relief to accept a late claim for the benefit of a prior-filed nonprovisional application after issuance of the application into a patent. *See* MPEP 1481.

A petition under 37 CFR 1.78(a)(3) to accept an unintentionally delayed claim under 35 U.S.C. 120 for the benefit of a prior-filed application must be accompanied by:

**(1)** the reference required by 35 U.S.C. 120 and 37 CFR 1.78(a)(2)(i) of the prior-filed application, unless previously submitted;

**(2)** the surcharge set forth in § 1.17(t); and

**(3)** a statement that the entire delay between the date the claim was due under 37 CFR 1.78(a)(2)(ii) and the date the claim was filed was unintentional. The Director may require additional information where there is a question whether the delay was unintentional.

As the petition for acceptance of an unintentionally delayed claim under 35 U.S.C. 120 for the benefit of the prior-filed nonprovisional applications satisfies the conditions of 37 CFR 1.78(a)(3), the petition is granted.

A corrected Filing Receipt, which includes the benefit claim to the prior-filed nonprovisional application, accompanies this decision on petition.

Petitioner is advised that the granting of this petition and the mailing of a corrected Filing Receipt should not be viewed as an indication that a determination has been made that this application is entitled to claim benefit of the prior-filed applications. A determination that applicant is entitled to claim benefit of the prior-filed applications will be made by the Examiner prior to the mailing of a certificate of correction.

Any inquiries concerning this decision may be directed to the undersigned at (571) 272-3211.

This application is being referred to the Certificates of Correction Branch for processing the request for a certificate of correction in accordance with this decision on the petition under 37 CFR 1.78(a)(3).

C. T. Donnell

Christina Tartera Donnell
Senior Petitions Attorney
Office of Petitions

ATTACHMENT: Corrected Filing Receipt

UNITED STATES PATENT AND TRADEMARK OFFICE

UNITED STATES DEPARTMENT OF COMMERCE
United States Patent and Trademark Office
Address: COMMISSIONER FOR PATENTS
P.O. Box 1450
Alexandria, Virginia 22313-1450
www.uspto.gov

| APPLICATION NUMBER | FILING or 371(c) DATE | GRP ART UNIT | FIL FEE REC'D | ATTY.DOCKET.NO | TOT CLAIMS | IND CLAIMS |
|---|---|---|---|---|---|---|
| 10/452,550 | 05/30/2003 | 3766 | 675 | 0084495-004US7 | 14 | 2 |

**CONFIRMATION NO. 3080**

**CORRECTED FILING RECEIPT**

36257
DAVIS WRIGHT TREMAINE LLP - San Francisco
505 MONTGOMERY STREET
SUITE 800
SAN FRANCISCO, CA 94111

*OC000000048861460*

Date Mailed: 07/20/2011

Receipt is acknowledged of this non-provisional patent application. The application will be taken up for examination in due course. Applicant will be notified as to the results of the examination. Any correspondence concerning the application must include the following identification information: the U.S. APPLICATION NUMBER, FILING DATE, NAME OF APPLICANT, and TITLE OF INVENTION. Fees transmitted by check or draft are subject to collection. Please verify the accuracy of the data presented on this receipt. **If an error is noted on this Filing Receipt, please submit a written request for a Filing Receipt Correction. Please provide a copy of this Filing Receipt with the changes noted thereon. If you received a "Notice to File Missing Parts" for this application, please submit any corrections to this Filing Receipt with your reply to the Notice. When the USPTO processes the reply to the Notice, the USPTO will generate another Filing Receipt incorporating the requested corrections**

**Applicant(s)**

Jawahar M. Desai, Roseville, CA;
Htay L. Nyo, San Jose, CA;

**Power of Attorney:**
Philip Yau--32892

**Domestic Priority data as claimed by applicant**

This application is a CON of 09/922,128 08/03/2001 ABN
which is a CON of 09/405,733 09/24/1999 ABN
which is a CON of 09/213,508 03/30/1998 ABN
which is a CON of 08/833,673 04/08/1997 ABN
which is a CON of 08/482,936 06/07/1995 PAT 5,620,481
which is a CIP of 08/318,427 10/05/1994 PAT 5,693,078
which is a CON of 07/726,035 07/05/1991 PAT 5,383,917

**Foreign Applications** (You may be eligible to benefit from the **Patent Prosecution Highway** program at the USPTO. Please see http://www.uspto.gov for more information.)

**If Required, Foreign Filing License Granted:** 07/10/2003
The country code and number of your priority application, to be used for filing abroad under the Paris Convention, is **US 10/452,550**
**Projected Publication Date:** Not Applicable
**Non-Publication Request:** No
**Early Publication Request:** No
**** SMALL ENTITY ****

**Title**

DEVICE AND METHOD FOR MULTI-PHASE RADIO-FREQUENCY ABLATION

**Preliminary Class**

606

## PROTECTING YOUR INVENTION OUTSIDE THE UNITED STATES

Since the rights granted by a U.S. patent extend only throughout the territory of the United States and have no effect in a foreign country, an inventor who wishes patent protection in another country must apply for a patent in a specific country or in regional patent offices. Applicants may wish to consider the filing of an international application under the Patent Cooperation Treaty (PCT). An international (PCT) application generally has the same effect as a regular national patent application in each PCT-member country. The PCT process **simplifies** the filing of patent applications on the same invention in member countries, but **does not result** in a grant of "an international patent" and does not eliminate the need of applicants to file additional documents and fees in countries where patent protection is desired.

Almost every country has its own patent law, and a person desiring a patent in a particular country must make an application for patent in that country in accordance with its particular laws. Since the laws of many countries differ in various respects from the patent law of the United States, applicants are advised to seek guidance from specific foreign countries to ensure that patent rights are not lost prematurely.

Applicants also are advised that in the case of inventions made in the United States, the Director of the USPTO must issue a license before applicants can apply for a patent in a foreign country. The filing of a U.S. patent application serves as a request for a foreign filing license. The application's filing receipt contains further information and guidance as to the status of applicant's license for foreign filing.

Applicants may wish to consult the USPTO booklet, "General Information Concerning Patents" (specifically, the section entitled "Treaties and Foreign Patents") for more information on timeframes and deadlines for filing foreign patent applications. The guide is available either by contacting the USPTO Contact Center at 800-786-9199, or it can be viewed on the USPTO website at http://www.uspto.gov/web/offices/pac/doc/general/index.html.

For information on preventing theft of your intellectual property (patents, trademarks and copyrights), you may wish to consult the U.S. Government website, http://www.stopfakes.gov. Part of a Department of Commerce initiative, this website includes self-help "toolkits" giving innovators guidance on how to protect intellectual property in specific countries such as China, Korea and Mexico. For questions regarding patent enforcement issues, applicants may call the U.S. Government hotline at 1-866-999-HALT (1-866-999-4158).

## LICENSE FOR FOREIGN FILING UNDER

## Title 35, United States Code, Section 184

## Title 37, Code of Federal Regulations, 5.11 & 5.15

**GRANTED**

The applicant has been granted a license under 35 U.S.C. 184, if the phrase "IF REQUIRED, FOREIGN FILING LICENSE GRANTED" followed by a date appears on this form. Such licenses are issued in all applications where the conditions for issuance of a license have been met, regardless of whether or not a license may be required as

set forth in 37 CFR 5.15. The scope and limitations of this license are set forth in 37 CFR 5.15(a) unless an earlier license has been issued under 37 CFR 5.15(b). The license is subject to revocation upon written notification. The date indicated is the effective date of the license, unless an earlier license of similar scope has been granted under 37 CFR 5.13 or 5.14.

This license is to be retained by the licensee and may be used at any time on or after the effective date thereof unless it is revoked. This license is automatically transferred to any related applications(s) filed under 37 CFR 1.53(d). This license is not retroactive.

The grant of a license does not in any way lessen the responsibility of a licensee for the security of the subject matter as imposed by any Government contract or the provisions of existing laws relating to espionage and the national security or the export of technical data. Licensees should apprise themselves of current regulations especially with respect to certain countries, of other agencies, particularly the Office of Defense Trade Controls, Department of State (with respect to Arms, Munitions and Implements of War (22 CFR 121-128)); the Bureau of Industry and Security, Department of Commerce (15 CFR parts 730-774); the Office of Foreign AssetsControl, Department of Treasury (31 CFR Parts 500+) and the Department of Energy.

**NOT GRANTED**

No license under 35 U.S.C. 184 has been granted at this time, if the phrase "IF REQUIRED, FOREIGN FILING LICENSE GRANTED" DOES NOT appear on this form. Applicant may still petition for a license under 37 CFR 5.12, if a license is desired before the expiration of 6 months from the filing date of the application. If 6 months has lapsed from the filing date of this application and the licensee has not received any indication of a secrecy order under 35 U.S.C. 181, the licensee may foreign file the application pursuant to 37 CFR 5.15(b).

UNITED STATES PATENT AND TRADEMARK OFFICE

Commissioner for Patents
United States Patent and Trademark Office
P.O. Box 1450
Alexandria, VA 22313-1450
www.uspto.gov

MAILED
AUG 22 2011
OFFICE OF PETITIONS

STRAUB & POKOTYLO
788 SHREWSBURY AVENUE
TINTON FALLS NJ 07724

| | | |
|---|---|---|
| In re Application of | : | |
| Bharat, et al. | : | DECISION ON PETITION |
| Application No. 10/452,791 | : | |
| Filed: June 2, 2003 | : | |
| Attorney Docket No. Google-37-1 | : | |

This is a decision on the "PETITION TO REVIVE AN UNINTENTIONALLY ABANDONED APPLICATION UNDER 37 C.F.R. 1.137(b) AND STATEMENT WHICH INCORPORATES BY REFERENCE THE ARGUMENTS IN A PREVIOUSLY FILED APPEAL BRIEF AS REQUIRED REPLY", filed August 5, 2011.

The petition is **DISMISSED.**

Any request for reconsideration of this decision must be submitted within **TWO (2) MONTHS** from the mail date of this decision. Extensions of time under 37 CFR 1.136(a) are permitted. The reconsideration request should include a cover letter entitled, "Renewed Petition under 37 CFR 1.137(b)". No further petition fee is required for a renewed petition.

The above-identified application became abandoned for failure to timely respond to the Notice of Non-Compliant Appeal Brief, mailed August 1, 2007. This Notice set an extendable period for reply of one (1) month for Applicants to respond. No reply with an extension of time having been received, the application became abandoned by operation of law on September 2, 2007. Applicants filed a Request for Continued Examination (RCE) on May 27, 2009, after the application was abandoned.

Contained in the body of the petition to revive, petitioner has included a statement requesting that the previously filed RCE incorporate by reference the arguments of the previously filed Appeal Brief.

37 CFR 1.4(c) states:

> Since different matters may be considered by different branches or sections of the United States Patent and Trademark Office, each distinct subject, inquiry or order must be contained in a separate paper to avoid confusion and delay in answering papers dealing with different subjects.

Accordingly, on renewed petition, petitioner is requested to supply his statement in a separate paper from the petition to revive.

Further correspondence with respect to this matter should be addressed as follows:

By mail: Mail Stop Petitions
Commissioner for Patents
PO Box 1450
Alexandria VA 22313-1450

By FAX: 571-273-8300
Attn: Office of Petitions

Telephone inquiries regarding this decision should be directed to the undersigned at (571)272-3207.

Cliff Congo
Petitions Attorney
Office of Petitions

UNITED STATES PATENT AND TRADEMARK OFFICE

Commissioner for Patents
United States Patent and Trademark Office
P.O. Box 1450
Alexandria, VA 22313-1450
www.uspto.gov

STRAUB & POKOTYLO
788 SHREWSBURY AVENUE
TINTON FALLS NJ 07724

MAILED
OCT 14 2011
OFFICE OF PETITIONS

| | | |
|---|---|---|
| In re Application of | : | |
| Bharat, et al. | : | DECISION ON PETITION |
| Application No. 10/452,791 | : | |
| Filed: June 2, 2003 | : | |
| Attorney Docket No. Google-37-1 | : | |

This is a decision on the renewed petition under 37 CFR 1.137(b), filed October 6, 2011.

The petition is **GRANTED**.

The above-identified application became abandoned for failure to timely respond to the Notice of Non-Compliant Appeal Brief, mailed August 1, 2007. This Notice set an extendable period for reply of one (1) month for Applicants to respond. No reply with an extension of time having been received, the application became abandoned by operation of law on September 2, 2007. Applicants filed a Request for Continued Examination (RCE) on May 27, 2009, after the application was abandoned. Applicants filed a petition to revive under 37 CFR 1.137(b) on August 5, 2011. However, the petition was dismissed in a decision mailed on August 22, 2011. The petition was dismissed because the required reply (a statement requesting that the previously filed RCE incorporate by reference the arguments of the previously filed Appeal Brief) was not filed in a separate paper per 37 CFR 1.4(c), but rather was contained in the body of the petition itself.

With the instant renewed petition, petitioner has submitted the required reply in a separate paper.

The application is being forwarded to Group Art Unit 2155 for consideration of the RCE filed May 27, 2009, and the subsequent statement filed October 6, 2011.

Telephone inquiries regarding this decision should be directed to the undersigned at (571)272-3207.

Cliff

Cliff Congo
Petitions Attorney
Office of Petitions

Atty. Docket No. GGT-002

IN THE UNITED STATES PATENT & TRADEMARK OFFICE

| | | |
|---|---|---|
| IN RE APPLICATION OF: | § | Please Enter /TD/ 06/21/2011 |
| | § | |
| **MIKHAIL MAKAROV et al.** | § | |
| | § | |
| APPLICATION NO: **10/452,811** | § | |
| | § | |
| FILED: **May 30, 2003** | § | PATENT NO.: **7,178,124** |
| | § | |
| FOR: **METHOD, ALGORITHMS, SOFTWARE, ARCHITECTURES, AND SYSTEM FOR PLACING CLOCKED COMPONENTS AND ROUTING TIMING SIGNALS INA CIRCUIT AND/OR LAYOUT** | § | ISSUED: **February 13, 2007** |

I hereby certify that this document is being transmitted to the USPTO or deposited with the United States Postal Service as first class mail in an envelope addressed to Commissioner for Patents, P.O. Box 1450, Alexandria, VA 22313-1450, on May 20, 2011.

By: /Judy Ryan/
Judy Ryan

REQUEST FOR CERTIFICATE OF CORRECTION UNDER 37 C.F.R. 1.323

ATTENTION: Certificate of Correction Branch
COMMISSIONER FOR PATENTS
OFFICE OF PATENT PUBLICATION
P.O. BOX 1450
ALEXANDRIA, VA 22313-1450

SIR:

Patentees respectfully request a Certificate of Correction in the above-referenced patent. The fee of $100.00 under 37 C.F.R. 1.20(a) is authorized to be paid by credit card.

The facts are as follows:

A number of errors appear in the above referenced patent as a result of an Examiner's Amendment (see, e.g., page 2, paragraph 5 and the paragraph bridging pages 2-3 of the Notice of Allowability dated October 10, 2006). Patentees' representatives inadvertently failed to correct the errors during the pendency of the above-identified application. Patentees respectfully request a Certificate of Correction to correct the errors. No new matter or new issues requiring further examination are introduced by the requested corrections.

The Examiner's Amendment inadvertently introduced a number of errors in Claim 24. For example, the Examiner's Amendment replaced the last two words "said components" in pending Claim 45 (Claim 45 of the application corresponds to Claim 24 of the issued patent) with --independently routing a plurality of combinational paths from at least first and second of said components at least third and fourth of said components-- from cancelled Claim 51 (see, e.g., page 2, paragraph 5 of the Notice of Allowability dated October 10, 2006). Thus, instead of simply adding the subject matter of Claim 51 to Claim 45, the Examiner's Amendment appears to have replaced part of the subject matter of Claim 45 with the subject matter of Claim 51.

As a result, Claim 24 now recites the phrase "routing said clock signal to independently routing a plurality of combinational paths" (column 25, line 46-47). This phrase contains an error, in that "routing a plurality of combinational paths" and "routing said clock signal" are intended to be separate from each other. Patentees request that the phrase be corrected to delete "routing said clock signal to" from column 25, line 46 of the issued patent, and to add that subject matter to the end of Claim 24.

Consistent with the above change, the phrase "axis; and" in Claim 24 of the issued patent (column 25, line 45) should be corrected to state "axis;" (line 45). Patentees also request that the period in column 25, line 49 be changed to a semicolon (;), the word "and" be added after the semicolon (;), and a new line "c) routing said clock signal to said components" be added after the word "and" to effect the full and complete correction.

Furthermore, the Examiner's Amendment inadvertently introduced an error in Claim 46, which replaced "a combination of at least two wires and at least one combinational element between two of said components" in pending Claim 95 of the application with --independently routing a plurality of combinational paths from at least first and second of said components at least third and fourth of said components-- (see, e.g., the paragraph bridging pages 2-3 of the Notice of Allowability dated October 10, 2006; Claim 95 of the application corresponds to Claim 46 of the issued patent). Thus, instead of adding subject matter similar to that of Claim 51 to Claim 95, the Examiner's Amendment replaced some subject matter in Claim 95 with subject matter similar to that of Claim 51, and duplicated other subject matter in Claim 95. As a result, Claim 46 (column 28, lines 8-12) of the issued patent recites "routing a plurality of combinational paths, each path comprising independently routing a plurality of combinational paths from at least first and second of said components to at least third and fourth of said components." This language includes at least one readily apparent error.

Grammatically, a "path" (a noun) cannot comprise "routing" (a verb). Patentees request that Claim 46 be amended to replace the text in column 28, lines 8-12 with "independently routing a plurality of combinational paths from at least first and second of said components to at least third and fourth of said components, each combinational path comprising a combination of at least two wires and at least one element between two of said components."

Claim 46 (column 28, line 6) of the issued patent also recites the phrase "along said first axis". Patentees request that the phrase "said first axis" in Claim 46 be changed to "a first axis" to correct a possible antecedent basis issue.

**The corrections requested are as follows:**

Claim 24, col. 25, line 45: change "axis; and" to --axis;--.

Claim 24, col. 25, line 46: change "routing said clock signal to independently routing a plurality of combinational paths" to --independently routing a plurality of combinational paths--.

Claim 24, col. 25, line 49: change "components" to --components; and--.

Claim 24, col. 25, after line 49, add a new line --c) routing said clock signal to said components.--.

Claim 46, col. 28, line 6: change "said first axis" to --a first axis--.

Claim 46, col. 28, lines 8-12: change "routing a plurality of combinational paths, each path comprising independently routing a plurality of combinational paths from at least first and second of said components to at least third and fourth of said components." to --independently routing a plurality of combinational paths from at least first and second of said components to at least third and fourth of said components, each combinational path comprising a combination of at least two wires and at least one element between two of said components.--

Any additional information and/or assistance with this Request may be obtained from the undersigned practitioner.

Respectfully submitted,

/Theresa J. Mahan/

Theresa J. Mahan
Reg. No. 65,086

Andrew D. Fortney, Ph.D.
Reg. No. 34,600

THE LAW OFFICES OF ANDREW D. FORTNEY, PH.D., P.C.
215 W. Fallbrook Avenue, Suite 203
Fresno, California 93711
(559) 432-6847

ADF:ssb:tjm

## SPE RESPONSE FOR CERTIFICATE OF CORRECTION

**Paper No.**:20110621

**DATE** : June 21, 2011

**TO SPE OF** : ART UNIT 2825

**SUBJECT** : Request for Certificate of Correction on Patent No.: 7003742

A response is requested with respect to the accompanying request for a certificate of correction.

Please complete this form and return with file, within **7** days to:
**Certificates of Correction Branch - ST (South Tower) 9A22**
Palm location **7590** - Tel. No. (703) 305-8309

With respect to the change(s) requested, correcting Office and/or Applicant's errors, should the patent read as shown in the certificate of correction? No new matter should be introduced, nor should the scope or meaning of the claims be changed.

**Thank You For Your Assistance** **Certificates of Correction Branch**

**The request for issuing the above-identified correction(s) is hereby:**

Note your decision on the appropriated box.

☒ **Approved** All changes apply.

☐ **Approved in Part** Specify below which changes **do not** apply.

☐ **Denied** State the reasons for denial below.

**Comments:**

OK to enter the Request for Certification of Correction filed 5/20/2011
/Thuan Do/
Primary Examiner
AU-2825
06/21/2011

/JACK CHIANG/
Supervisory Patent Examiner.Art Unit 2825

PTO/SB/44 (09-07)
Approved for use through 08/31/2013. OMB 0651-0033
U.S. Patent and Trademark Office; U.S. DEPARTMENT OF COMMERCE
Under the Paperwork Reduction Act of 1995, no persons are required to respond to a collection of information unless it displays a valid OMB control number.
(Also Form PTO-1050)

# UNITED STATES PATENT AND TRADEMARK OFFICE
## CERTIFICATE OF CORRECTION



PATENT NO. : 7,178,124

APPLICATION NO.: 10/452,811

ISSUE DATE : February 13, 2007

INVENTOR(S) : Mikhail MAKAROV et al.

Please enter.
/TD/
06/21/2011

It is certified that an error appears or errors appear in the above-identified patent and that said Letters Patent is hereby corrected as shown below:

IN THE CLAIMS

Claim 24, col. 25, line 45: change "axis; and" to --axis;--.

Claim 24, col. 25, line 46: change "routing said clock signal to independently routing a plurality of combinational paths" to --independently routing a plurality of combinational paths--.

Claim 24, col. 25, line 49: change "components." to --components; and--.

Claim 24, col. 25, after line 49, add a new line --c) routing said clock signal to said components.--.

Claim 46, col. 28, line 6: change "said first axis" to --a first axis--.

Claim 46, col. 28, lines 8-12: change "routing a plurality of combinational paths, each path comprising independently routing a plurality of combinational paths from at least first and second of said components to at least third and fourth of said components." to --independently routing a plurality of combinational paths from at least first and second of said components to at least third and fourth of said components, each combinational path comprising a combination of at least two wires and at least one element between two of said components.--

MAILING ADDRESS OF SENDER (Please do not use customer number below):

The Law Offices of Andrew D. Fortney, Ph.D., P.C.
215 W. Fallbrook Avenue, Suite 203
Fresno, California 93711

This collection of information is required by 37 CFR 1.322, 1.323, and 1.324. The information is required to obtain or retain a benefit by the public which is to file (and by the USPTO to process) an application. Confidentiality is governed by 35 U.S.C. 122 and 37 CFR 1.14. This collection is estimated to take 1.0 hour to complete, including gathering, preparing, and submitting the completed application form to the USPTO. Time will vary depending upon the individual case. Any comments on the amount of time you require to complete this form and/or suggestions for reducing this burden, should be sent to the Chief Information Officer, U.S. Patent and Trademark Office, U.S. Department of Commerce, P.O. Box 1450, Alexandria, VA 22313-1450. DO NOT SEND FEES OR COMPLETED FORMS TO THIS ADDRESS. **SEND TO: Attention Certificate of Corrections Branch, Commissioner for Patents, P.O. Box 1450, Alexandria, VA 22313-1450.**

*If you need assistance in completing the form, call 1-800-PTO-9199 and select option 2.*

UNITED STATES PATENT AND TRADEMARK OFFICE

Commissioner for Patents
United States Patent and Trademark Office
P.O. Box 1450
Alexandria, VA 22313-1450
www.uspto.gov

Straub & Pokotylo
788 Shrewsbury Avenue
Tinton Falls NJ 07724

MAILED
SEP 21 2011
OFFICE OF PETITIONS

In re Application of

Dean, et al.

Application No. 10/452,830

Filed: June 2, 2003

Attorney Docket No. Google-31/CON3 (GP-064-04

DECISION ON PETITION

This is a decision on the petition under 37 CFR 1.181(a) to withdraw the holding of abandonment, filed August 5, 2011.

The petition under 37 CFR 1.181(a) to withdraw the holding of abandonment is **granted**.

This application was held abandoned on May 1, 2011, after it was believed that a proper response was received to the non-final Office action mailed February 1, 2011, which set a statutory period for reply of three months from its mailing date. A Notice of Abandonment had not been mailed as of the mailing date of this decision.

Petitioner maintains that a proper and timely response to the non-final Office action was transmitted via facsimile to a USPTO facsimile on August 1, 2011. Petitioner states that the response was not sent to the USPTO central fax line, i.e., 571-273-8300, but was mistakenly sent to the Assignment Division of the USPTO. As evidence of the same, petitioner provides a copy of the response containing a certificate of transmission dated August 1, 2011, and a copy of the petitioner's "Fax Journal Report" indicating that 29 pages were transmitted to the USPTO Assignment Recordation Services Office on August 1, 2011.

Petitioner's argument has been considered and is persuasive. Section 711.03(c) of the MPEP provides, in pertinent part, that:

> Where a certificate of mailing under 37 CFR 1.8, but not a postcard receipt, is relied upon in a petition to withdraw the holding of abandonment, see 37 CFR 1.8(b) and MPEP § 512. As stated in 37 CFR 1.8(b)(3) the statement that attests to the previous timely mailing or transmission of the correspondence must be on a personal knowledge basis, or to the satisfaction of the Director of the USPTO. If the statement attesting to the previous timely mailing is not made by the person who signed the Certificate of Mailing (i.e., there is no personal knowledge basis), then the statement attesting to the previous timely mailing should include evidence that supports the conclusion that the correspondence was actually mailed (e.g., copies of a mailing log establishing that correspondence was mailed for that application). When the correspondence is shown to have been timely filed based on a certificate of mailing, the correspondence is entered into

PALM with the actual date of receipt (i.e., the date that the duplicate copy of the papers was filed with the statement under 37 CFR 1.8).

A review of the copy of the response to the non-final Office action reveals that it contains a certificate of transmission dated August 1, 2011, that is signed by John C. Pokotylo, who also signed the instant petition. The certificate of transmission indicating that reply was transmitted on August 1, 2011, is corroborated by the "Fax Journal Report" indicating that 29 pages were transmitted to the USPTO on August 1, 2011. Petitioner properly used the protections offered by 37 CFR 1.8 and is, therefore, entitled to assert that the response to the non-final Office action transmitted August 1, 2011, is timely and complete by virtue of the certificate of transmission dated August 1, 2011, contained thereon. The petition is granted, accordingly.

Deposit account 50-1049 will be charged $1, 110.00 for the extension of time within the third month necessary to make the response filed August 1, 2011, timely.

Further inquires regarding this decision may be directed to the undersigned at (571) 272-3222.

The application file is being forwarded to Technology Center GAU 3622 further processing including consideration of the amendment filed August 1, 2011, a copy of which was filed August 5, 2011.

/Kenya A. McLaughlin/

Kenya A. McLaughlin
Petitions Attorney
Office of Petitions

## SPE RESPONSE FOR CERTIFICATE OF CORRECTION

Paper No.: _____

DATE :January 2, 2008

TO SPE OF : ART UNIT 1734

SUBJECT : Request for Certificate of Correction for Appl. No.10/452893patent no.7041190

Please respond to this request for a certificate of correction within 7 days.

Please review the requested changes/corrections as shown in the **COCIN** document(s) in the IFW application image. No new matter should be introduced, nor should the scope or meaning of the claims be changed.

Please complete the response (see below) and forward the completed response to scanning using document code **COCX**.

**Magdalene Talley**

**Certificates of Correction Branch**

**703-308-9390 ext. 116**

**Thank You For Your Assistance**

**The request for issuing the above-identified correction(s) is hereby:**

Note your decision on the appropriate box.

- ☐ **Approved** — **All** changes apply.
- ☒ **Approved in Part** — Specify below which changes **do not** apply.
- ☐ **Denied** — State the reasons for denial below.

**Comments:** THE CHANGES AT COLUMN 11-12, LINE 1, COLUMN 8, ROW 3 in TABLE 4 and AT COLUMN 11-12, LINE 1, COLUMN 9, ROW 3 in TABLE 4 SHOULD NOT BE MADE, SINCE THEY ARE NOT NECESSARY. THIS WAS AGREED TO BY THE ATTORNEY OF RECORD

PHILIP TUCKER _____ 1745

SPE Art Unit

UNITED STATES PATENT AND TRADEMARK OFFICE

Commissioner for Patents
United States Patent and Trademark Office
P.O. Box 1450
Alexandria, VA 22313-1450
www.uspto.gov

**Nixon Peabody, LLP**
**401 Ninth Street, NW**
**Suite 900**
**Washington, DC 20004**

**MAILED**

NOV 05 2010

**OFFICE OF PETITIONS**

In re Application of
Charles P. Gilliam et al.
Application No. 10/452,920
Filed: June 3, 2003
Attorney Docket No. 111325-160700

DECISION ON PETITION
TO WITHDRAW
FROM RECORD

This is a decision on the Request to Withdraw as attorney or agent of record under 37 C.F.R. § 1.36(b), filed September 10, 2010.

The request is **moot because a revocation of power of attorney has been filed.**

A review of the file record indicates that the power of attorney to Jeffrey L. Costellia and all attorneys/agents of record has been revoked by the assignee of the patent application on September 16, 2010. Accordingly, the request to withdraw under 37 C.F.R. § 1.36(b) is moot.

All future communications from the Office will continue to be directed to the below-listed address until otherwise notified by applicant.

Telephone inquires concerning this decision should be directed to Kimberly Inabinet at 571-272-4618.

/Kimberly Inabinet/

Kimberly Inabinet
Petitions Examiner
Office of Petitions

cc: Reed Smith, LLP
P.O. Box 488
Pittsburgh, PA 15230

UNITED STATES PATENT AND TRADEMARK OFFICE

Commissioner for Patents
United States Patent and Trademark Office
P.O. Box 1450
Alexandria, VA 22313-1450
www.uspto.gov

Motorola, Inc.
Law Department
1303 East Algonquin Road
3rd Floor
Schaumburg IL 60196

MAILED
AUG 17 2010
OFFICE OF PETITIONS

In re Application of
Ajay Luthra
Application No. 10/453,211
Filed: June 3, 2003
Attorney Docket No. BCS03169

DECISION ON PETITION

This is a decision on the petition under the unintentional provisions of 37 CFR 1.137(b), filed July 8, 2010, to revive the above-identified application.

The petition is **GRANTED**.

The application became abandoned for failure to timely file a reply within the meaning of 37 CFR 1.113 to the final Office action of February 8, 2008. The proposed reply required for consideration of a petition to revive must be a Notice of Appeal (and appeal fee required by 37 CFR 41.20(b)(2), an amendment that *prima facie* places the application in condition for allowance, a Request for Continued Examination and submission (37 CFR 1.114), or the filing of a continuing application under 37 CFR 1.53(b). See MPEP 711.03(c)(III)(A)(2). No extensions of time pursuant to the provisions of 37 CFR 1.136(a) were obtained. Accordingly, the date of abandonment of this application was midnight May 8, 2008.

The petition satisfies the requirements of 37 CFR 1.137(b) in that petitioner has supplied (1) the reply in the form of a Request for Continued Examination (RCE) and fee of $810.00, and the submission required by 37 CFR 1.114; (2) the petition fee of $1,620.00; and (3) a proper statement of unintentional delay.

The file does not indicate a change of address has been submitted, although the address given on the petition differs from the address of record. If appropriate, a change of address should be filed in accordance with MPEP 601.03. A courtesy copy of this decision is being mailed to the address given on the petition; however, the Office will mail all future correspondence solely to the address of record.

Telephone inquiries concerning this decision should be directed to the undersigned at (571) 272-3213.

This application is being referred to Technology Center AU 2621for processing of the RCE and for appropriate action by the Examiner in the normal course of business on the amendment submitted in accordance with 37 CFR 1.114.

Cheryl Gibson Baylor

Cheryl Gibson-Baylor
Petitions Examiner
Office of Petitions

cc: Larry T. Cullen
101 Tournament Drive
Horsham, PA 19044

UNITED STATES PATENT AND TRADEMARK OFFICE

Commissioner for Patents
United States Patent and Trademark Office
P.O. Box 1450
Alexandria, VA 22313-1450
www.uspto.gov

KEVIN E. MCVEIGH
RHODIA INC.
CN 7500
8 CEDAR BROOK DRIVE
CRANBURY NJ 08512

MAILED
DEC 20 2010
OFFICE OF PETITIONS

In re Patent No. 7,030,275 :
Issue Date: April 18, 2006 :
Application No. 10/453,240 : ON PETITION
Filed: June 3, 2003 :
Attorney Docket No: **RD 02029** :

This is a decision on the petition filed October 20, 2010 under 37 CFR 1.378(c)[1], to accept the delayed payment of the maintenance fee for the above-identified patent and to change the entity status.

The petition under 37 CFR 1.378 (c) is **GRANTED**.

The patent issued on April 18, 2006. The first maintenance fee due could have been paid during the period from April 18, 2009 to October 19, 2009 or, with a surcharge during the period from October 20, 2009 to April 18, 2010. Accordingly, this patent expired on April 18, 2010 for failure to timely remit the first maintenance fee.

Accordingly, the maintenance fee in this case is hereby accepted and the above-identified patent is hereby reinstated as of the mail date of this decision. Fees in the amount of $980.00 for the first maintenance fee and $1,640.00 for the surcharge have been charged to Deposit Account No. 18-1169.

Telephone inquiries concerning this matter may be directed to the undersigned Petitions Attorney at (571) 272-3212.

Patricia Faison-Ball

Patricia Faison-Ball
Senior Petitions Attorney
Office of Petitions

[1] 37 CFR 1.378( c) provides that a petition to accept an unintentionally delayed payment of a maintenance fee must be filed within twenty-four months of the six-month grace period provided in § 1.362(e) and must include:
(1) The required maintenance fee set forth in § 1.20(e) through (g);
(2) The surcharge set forth in § 1.20(l)(2); and
(3) A statement that the delay in payment of the maintenance fee was unintentional.

UNITED STATES PATENT AND TRADEMARK OFFICE

Commissioner for Patents
United States Patent and Trademark Office
P.O. Box 1450
Alexandria, VA 22313-1450
www.uspto.gov

**MICHAEL E. ZALL**
**TWO YORKSHIRE DRIVE**
**SUFFERN NY 10901**

**MAILED**

**DEC 14 2010**

**OFFICE OF PETITIONS**

| | | |
|---|---|---|
| In re Application of | : | |
| Hecht et al. | : | |
| Application No. 10/453,335 | : | DECISION ON PETITION |
| Filed: June 3, 2003 | : | |
| Attorney Docket No. HECHT 3.0-001 | : | |

This is a decision on the petition under the unintentional provisions of 37 CFR 1.137(b), filed November 29, 2010 and March 9, 2010, to revive the above-identified application.

The petition is **GRANTED**.

The above-identified application became abandoned for failure to reply in a timely manner to the Notice to File Corrected Application Papers (Notice) mailed July 29, 2003, which set a shortened statutory period for reply of two (2) months. No extensions of time under the provisions of 37 CFR 1.136(a) were timely obtained. Accordingly, the above-identified application became abandoned on September 30, 2003. A Notice of Abandonment was mailed on September 9, 2004.

The petition satisfies the requirements of 37 CFR 1.137(b) in that petitioner has supplied (1) a Substitute Specification (previously submitted March 9, 2010), (2) the petition fee of $810.00 (previously submitted March 9, 2010), and (3) a proper statement of unintentional delay.

Further, it is not apparent whether the statement of unintentional delay was signed by a person who would have been in a position of knowing that the **entire** delay in filing the required reply from the due date for the reply until the filing of a grantable petition pursuant to 37 CFR 1.137(b) was unintentional. Nevertheless, in accordance with 37 CFR 10.18, the statement is accepted as constituting a certification of unintentional delay. However, in the event that petitioner has no knowledge that the delay was unintentional, petitioner must make such an inquiry to ascertain that, in fact, the delay was unintentional. If petitioner discovers that the delay was intentional, petitioner must notify the Office.

Telephone inquiries concerning this decision should be directed to the undersigned at (571) 272-7751.

This application is being referred to the Office of Patent Application Processing for further processing in accordance with this decision on petition.

Joan Olszewski

Joan Olszewski
Petitions Examiner
Office of Petitions

PTO/SB/66 (03-09)
Approved for use through 03/31/2012. OMB 0651-0016
U.S. Patent and Trademark Office: U.S. DEPARTMENT OF COMMERCE
Under the Paperwork Reduction Act of 1995, no persons are required to respond to a collection of information unless it displays valid OMB control number.

# PETITION TO ACCEPT UNINTENTIONALLY DELAYED PAYMENT OF MAINTENANCE FEE IN AN EXPIRED PATENT (37 CFR 1.378(c))

| Patent Number | Issue Date (YYYY-MM-DD) | Application Number | Filing Date (YYYY-MM-DD) | Docket Number (if applicable) |
|---|---|---|---|---|
| 7,111,540 | 2006-09-26 | 10/453,355 | 2003-06-03 | 34120-46 |

CAUTION: Maintenance fee (and surcharge, if any) payment must correctly identify: (1) the patent number and (2) the application number of the actual U.S. application leading to issuance of that patent to ensure the fee(s) is/are associated with the correct patent. 37 CFR 1.366(c) and (d).

SMALL ENTITY
☐ Patentee claims, or has previously claimed, small entity status. See 37 CFR 1.27.

LOSS OF ENTITLEMENT TO SMALL ENTITY STATUS
☐ Patentee is no longer entitled to small entity status. See 37 CFR 1.27(g)

| NOT Small Entity | | Small Entity | |
|---|---|---|---|
| Fee | Code | Fee | Code |
| ◉ 3 ½ year | (1551) | ◯ 3 ½ year | (2551) |
| ◯ 7 ½ year | (1552) | ◯ 7 ½ year | (2552) |
| ◯ 11 ½ year | (1553) | ◯ 11 ½ year | (2553) |

SURCHARGE
The surcharge required by 37 CFR 1.20(i)(2) (Fee Code 1558) must be paid as a condition of accepting unintentionally delayed payment of the maintenance fee.

MAINTENANCE FEE (37 CFR 1.20(e)-(g))
The appropriate maintenance fee must be submitted with this petition.

STATEMENT
THE UNDERSIGNED CERTIFIES THAT THE DELAY IN PAYMENT OF THE MAINTENANCE FEE TO THIS PATENT WAS UNINTENTIONAL

PETITIONER(S) REQUEST THAT THE DELAYED PAYMENT OF THE MAINTENANCE FEE BE ACCEPTED AND THE PATENT REINSTATED

THIS PORTION MUST BE COMPLETED BY THE SIGNATORY OR SIGNATORIES

37 CFR 1.378(d) states: "Any petition under this section must be signed by an attorney or agent registered to practice before the Patent and Trademark Office, or by the patentee, the assignee, or other party in interest."

I certify, in accordance with 37 CFR 1.4(d)(4) that I am

◉ An attorney or agent registered to practice before the Patent and Trademark Office

◯ A sole patentee

◯ A joint patentee; I certify that I am authorized to sign this submission on behalf of all the other patentees.

◯ A joint patentee; all of whom are signing this e-petition

◯ The assignee of record of the entire interest

Under the Paperwork Reduction Act of 1995, no persons are required to respond to a collection of information unless it displays valid OMB control number.

| Patent Practitioner | | | |
|---|---|---|---|
| A signature of the applicant or representative is required in accordance with 37 CFR 1.33 and 10.18. Please see 37 CFR 1.4(d) for the form of the signature | | | |
| Signature | /Charles J. Meyer/ | Date (YYYY-MM-DD) | 2011-01-05 |
| Name | Charles J. Meyer | Registration Number | 41996 |

This collection of information is required by 37 CFR 1.378(c). The information is required to obtain or retain a benefit by the public which is to file (and by the USPTO to process) an application. Confidentiality is governed by 35 U.S.C. 122 and 37 CFR 1.11 and 1.14. This collection is estimated to take 1 hour to complete, including gathering, preparing, and submitting the completed application form to the USPTO. Time will vary depending upon the individual case. Any comments on the amount of time you require to complete this form and/ or suggestions for reducing this burden, should be sent to the Chief Information Officer, U.S. Patent and Trademark Office, U.S. Department of Commerce, P.O. Box 1450, Alexandria, VA 22313-1450. DO NOT SEND FEES OR COMPLETED FORMS TO THIS ADDRESS. **This form can only be used when in conjunction with EFS-Web. If this form is mailed to the USPTO, it may cause delays in reinstating the patent.**

# Privacy Act Statement

The Privacy Act of 1974 (P.L. 93-579) requires that you be given certain information in connection with your submission of the attached form related to a patent application or patent. Accordingly, pursuant to the requirements of the Act, please be advised that: (1) the general authority for the collection of this information is 35 U.S.C. 2(b)(2); (2) furnishing of the information solicited is voluntary; and (3) the principal purpose for which the information is used by the U.S. Patent and Trademark Office is to process and/or examine your submission related to a patent application or patent. If you do not furnish the requested information, the U.S. Patent and Trademark Office may not be able to process and/or examine your submission, which may result in termination of proceedings or abandonment of the application or expiration of the patent.

The information provided by you in this form will be subject to the following routine uses:

1. The information on this form will be treated confidentially to the extent allowed under the Freedom of Information Act (5 U.S.C. 552) and the Privacy Act (5 U.S.C. 552a). Records from this system of records may be disclosed to the Department of Justice to determine whether the Freedom of Information Act requires disclosure of these records.

2. A record from this system of records may be disclosed, as a routine use, in the course of presenting evidence to a court, magistrate, or administrative tribunal, including disclosures to opposing counsel in the course of settlement negotiations.

3. A record in this system of records may be disclosed, as a routine use, to a Member of Congress submitting a request involving an individual, to whom the record pertains, when the individual has requested assistance from the Member with respect to the subject matter of the record.

4. A record in this system of records may be disclosed, as a routine use, to a contractor of the Agency having need for the information in order to perform a contract. Recipients of information shall be required to comply with the requirements of the Privacy Act of 1974, as amended, pursuant to 5 U.S.C. 552a(m).

5. A record related to an International Application filed under the Patent Cooperation Treaty in this system of records may be disclosed, as a routine use, to the International Bureau of the World Intellectual Property Organization, pursuant to the Patent Cooperation Treaty.

6. A record in this system of records may be disclosed, as a routine use, to another federal agency for purposes of National Security review (35 U.S.C. 181) and for review pursuant to the Atomic Energy Act (42 U.S.C. 218(c)).

7. A record from this system of records may be disclosed, as a routine use, to the Administrator, General Services, or his/her designee, during an inspection of records conducted by GSA as part of that agency's responsibility to recommend improvements in records management practices and programs, under authority of 44 U.S.C. 2904 and 2906. Such disclosure shall be made in accordance with the GSA regulations governing inspection of records for this purpose, and any other relevant (i.e., GSA or Commerce) directive. Such disclosure shall not be used to make determinations about individuals.

8. A record from this system of records may be disclosed, as a routine use, to the public after either publication of the application pursuant to 35 U.S.C. 122(b) or issuance of a patent pursuant to 35 U.S.C. 151. Further, a record may be disclosed, subject to the limitations of 37 CFR 1.14, as a routine use, to the public if the record was filed in an application which became abandoned or in which the proceedings were terminated and which application is referenced by either a published application, an application open to public inspections or an issued patent.

9. A record from this system of records may be disclosed, as a routine use, to a Federal, State, or local law enforcement agency, if the USPTO becomes aware of a violation or potential violation of law or regulation.

UNITED STATES PATENT AND TRADEMARK OFFICE

Commissioner for Patents
United States Patent and Trademark Office
P.O. Box 1450
Alexandria, VA 22313-1450
www.uspto.gov

In re Patent No. 7111540
Issue Date: September 26,2006
Application No. 10453355
Filed: June 3,2003
Attorney Docket No. HRODRIGUEZ

:
:DECISION GRANTING PETITION
:UNDER 37 CFR 1.378(c)
:

This is a decision on the electronic petition, filed January 5,2011 ,under 37 CFR 1.378(c) to accept the unintentionally delayed payment of the 3.5 year maintenance fee for the above-identified patent.

The petition is **GRANTED**.

The maintenance fee is accepted, and the above-identified patent reinstated as of January 5,2011 . This decision also constitutes notice that the fee has been accepted. An electronic copy of the petition and this decision has been created as an entry in the Image File Wrapper. Nevertheless, petitioner should print and retain an independent copy.

Telephone inquiries related to this electronic decision should be directed to the Electronic Business Center at 1-866-217-9197.

UNITED STATES PATENT AND TRADEMARK OFFICE

Commissioner for Patents
United States Patent and Trademark Office
P.O. Box 1450
Alexandria, VA 22313-1450
www.uspto.gov

MAILED

DEC 13 2010

OFFICE OF PETITIONS

Workman Nydegger
1000 Eagle Gate Tower
60 East South Temple
Salt Lake City UT 84111

In re Patent No. 7,793,656
Issue Date: September 14, 2010
Application No. 10/453,462
Filed: June 3, 2003
Attorney Docket No. 16413.1

DECISION ON PETITION

This is a decision on the Request For A Certificate Of Correction Under 37 C.F.R. §1.323, filed October 1, 2010, requesting correction on the Title Page of the subject patent, via issuance of a Certificate of Correction under 37 CFR 1.323, to remove assignee's name. The Request is being treated as a Petition Under 37 CFR §3.81(b). A completed Certificate of Correction Form (PTO/SB/44) was submitted with the petition.

The petition under 37 CFR §3.81(b) is **GRANTED**.

Petitioner requests that the present Petition was submitted to remove assignee's name on the previously submitted PTOL-85B and that the listing was a mistake. Accordingly, petitioner requests that a Certificate of Correction (PTO/SB/44) be issued to remove assignee's name to the Title Page of the Letters Patent.

37 CFR 3.81(b), effective June 25, 2004, reads:

> *After payment of the issue fee:* Any request for issuance of an application in the name of the assignee submitted after the date of payment of the issue fee, and any request for a patent to be corrected to state the name of the assignee, must state that the assignment was submitted for recordation as set forth in § 3.11 before issuance of the patent, and must include a request for a certificate of correction under § 1.323 of this chapter (accompanied by the fee set forth in § 1.20(a) and the processing fee set forth in § 1.17(i) of this chapter.

The requisite $100.00 fee (Fee Code 1811) as set forth under 37 CFR 1.20(a) have been submitted. However, the requisite $130.00 processing fee (Fee Code 1464), as set forth under 37 CFR 1.17(i), was accompanied deposit account authorization to charge any required fees. Further, Office assignment records are consistent with the requested correction. Accordingly, since the Petition complies with the provisions of 37 CFR 3.81(b), it is appropriate for the Office to issue a Certificate of Correction in accordance with the content at Item (73) on the Form PTO/SB/44 submitted with the Petition.

However, petitioner requests several corrections to be made in Items (56) and (57), also in The Columns. Therefore, these corrections will be handled directly in the Certificate of Correction Branch.

Inquiries related this communication should be directed to the undersigned at (571)272-3213.

Any questions concerning the issuance of a Certificate of Correction should be directed to the Certificates of Correction Branch at (571) 272-4200.

This matter is being referred to the Certificates of Correction Branch for processing of a Certificate of Correction in U.S. Patent No. 7,793,656.

Cheryl Gibson-Baylor

Cheryl Gibson-Baylor
Petitions Examiner
Office of Petitions

UNITED STATES PATENT AND TRADEMARK OFFICE

Commissioner for Patents
United States Patent and Trademark Office
P.O. Box 1450
Alexandria, VA 22313-1450
www.uspto.gov

**SALTAMAR INNOVATIONS**
**1 MATHEWSON ROAD**
**BARRINGTON RI 02806**

**MAILED**
JUN 30 2011
**OFFICE OF PETITIONS**

| | | |
|---|---|---|
| In re Patent No. 7,511,736 | : | |
| Issue Date: March 31, 2009 | : | |
| Application No. 10/453,767 | : | NOTICE |
| Filed: June 3, 2003 | : | |
| Attorney Docket No. 0315US-TSI | : | |

This is a notice regarding your request, April 27, 2011, for acceptance of a fee deficiency submission under 37 CFR 1.28.

On September 1, 1998, the Court of Appeals for the Federal Circuit held that 37 CFR 1.28(c) is the sole provision governing the time for correction of the erroneous payment of the issue fee as a small entity. **See DH Technology v. Synergystex International, Inc. 154 F.3d 1333, 47 USPQ2d 1865 (Fed. Cir. Sept. 1, 1998).**

The Office no longer investigates or rejects original or reissue applications under 37 CFR 1.56. **1098 Off. Gaz. Pat. Office 502 (January 3, 1989)**. Therefore, nothing in this Notice is intended to imply that an investigation was done.

Your fee deficiency submission under 37 CFR 1.28 is hereby **ACCEPTED**.

This patent is no longer entitled to small entity status. Accordingly, all future fees paid in this patent must be paid at the large entity rate.

*/Liana Walsh/*
Liana Walsh
Petitions Examiner
Office of Petitions

UNITED STATES PATENT AND TRADEMARK OFFICE

Commissioner for Patents
United States Patent and Trademark Office
P.O. Box 1450
Alexandria, VA 22313-1450
www.uspto.gov

**LAW OFFICES OF BRIAN S STEINBERGER**
**101 BREVARD AVENUE**
**COCOA FL 32922**

MAILED
FEB 28 2011
OFFICE OF PETITIONS

| | | |
|---|---|---|
| Patent No. RE41109 | : | |
| Issue Date: February 9, 2010 | : | |
| Application No. 10/453,805 | : | ON PETITION |
| Filed: June 3, 2003 | : | |
| Attorney Docket No. PC-1461RI | : | |

This is a decision on the petition filed October 28, 2010, under 37 CFR 3.81(b) to correct the front page of the above-identified patent by way of a Certificate of Correction.

The petition is **GRANTED**.

The applicant is requesting that the assignee name be deleted from the front page of the patent.

A petition under 37 CFR 3.81(b) requires a fee of $130. As authorized this fee will be charged to petitioner's deposit account.

The patent file is being forwarded to the Certificates of Correction Branch for issuance of the requested Certificate of Correction.

Telephone inquiries concerning this decision may be directed to the Kimberly Inabinet at (571) 272-4618. Inquiries regarding the issuance of a certificate of correction should be directed to the Certificate of Correction Branch at (703) 756-1814.

/Carl Friedman/
Carl Friedman
Petitions Examiner
Office of Petitions

UNITED STATES DEPARTMENT OF COMMERCE
**Patent and Trademark Office**
ASSISTANT SECRETARY OF COMMERCE AND
COMMISSIONER OF PATENTS AND TRADEMARKS
P.O. BOX 1450
Alexandria, Va 22313- 1450
www.uspto.gov.

10/453824

DATE: June 10, 2011
Patent No: 7917647 B2
Applicant: Cooper et al.
Issued: March 29, 2011

Request for consideration of Certificate of Correction:

Consideration has been given for your request for the certificate of correction for the above-identified patent under the provisions of Rules 1.322/1.323.

Respecting the alleged errors in column(s) 126 line 19 and 129 line 15 are printed in accordance with the record. Therefore, no correction(s) are in order here under United States Codes (U.S.C.) 254 Code of Federal Regulation (C.F.R.) 1.322/1.323.

In view of the foregoing, in this matter your request is hereby denied. A certificate of correction will be issued to correct the remaining errors noted in your request.

RoChaun Johnson for
Mary Diggs, Supervisor
Decisions and Certificates of Correction
(571) 272-0470

THOMAS F. BRENNAN
SCHWEGMAN, LUNDBERG, & WOESSNER, P.A.
P.O. BOX 2938
MINNEAPOLIS, MN 55402

## SPE RESPONSE FOR CERTIFICATE OF CORRECTION

**Paper No.:** _____

**DATE** : 05/24/11

**TO SPE OF** : ART UNIT 2455

**SUBJECT** : Request for Certificate of Correction for Appl. No.: 10/453,824 Patent No.: 7917647

**CofC mailroom date:** 05/20/11

Please respond to this request for a certificate of correction within 7 days.

**FOR IFW FILES:**

Please review the requested changes/corrections as shown in the **COCIN** document(s) in the IFW application image. No new matter should be introduced, nor should the scope or meaning of the claims be changed.

Please complete the response (see below) and forward the completed response to scanning using document code **COCX**.

**FOR PAPER FILES:**

Please review the requested changes/corrections as shown in the attached certificate of correction. Please complete this form (see below) and forward it with the file to:

**Certificates of Correction Branch (CofC)**
**Randolph Square – 9D10-A**
**Palm Location 7580**

**RoChaun Johnson**
**Certificates of Correction Branch**
**703-756-1580**

**Thank You For Your Assistance**

**The request for issuing the above-identified correction(s) is hereby:**
Note your decision on the appropriate box.

| | |
|---|---|
| ☐ **Approved** | **All** changes apply. |
| X **Approved in Part** | Specify below which changes **do not** apply. |
| ☐ **Denied** | State the reasons for denial below. |

**Comments:**
Corrections for the following are not approved, since the corrections change the scope of the claims:
* In column 126, line 19, in Claim 13 delete "produced." and insert- - produced; and if said output buffer's working section is full, and said reserved section is in use, processing said new connection but discarding all DME data from said event. - -, therefor.
* In column 129, line 15, in Claim 28 delete "produced." and insert- - produced; and if said output buffer's working section is full, and said reserved section is in use, processing said new connection but discarding all DME data from said event. - -, therefor.

/Emmanuel L Moise/**SPE** **Art Unit : 2455**

UNITED STATES PATENT AND TRADEMARK OFFICE

Commissioner for Patents
United States Patent and Trademark Office
P.O. Box 1450
Alexandria, VA 22313-1450
www.uspto.gov

Paper No.

Justin Santa Barbara
14 Ashley Gardens
Amrosden Ave
London SW1P -1QD
UNITED KINGDOM

MAILED

SEP 20 2010

OFFICE OF PETITIONS

| | | |
|---|---|---|
| In re Application of | : | |
| Justin Santa Barbara | : | |
| Application No. 10/454,367 | : | DECISION ON |
| Filed: June 4, 2003 | : | PETITION |
| Atty Docket No. 3578.1000-000 | : | |

This is a decision on the PETITION FOR REVIVAL OF AN APPLICATION FOR PATENT ABANDONED UNAVOIDABLY UNDER 37 CFR 1.137(a) filed February 10, 2010, which is properly treated as a (no-fee) PETITION TO WITHDRAW HOLDING OF ABANDONMENT.

The above-identified application became abandoned for failure to pay the Issue Fee within three months of the mailing date, May 18, 2009, of the Notice of Allowance and Fee(s) Due. This Office action set a three-month nonextendable statutory period for reply. No reply having been received, the above-identified application became abandoned on August 19, 2009. A courtesy Notice of Abandonment was mailed on September 11, 2009[1].

Applicant asserts non-receipt of the Notice of Allowance due to the Office mailing the Notice to an incorrect address. Applicant's argument has been considered, and found persuasive. A review of the record establishes that on June 21, 2006, applicant filed a properly completed revocation of power of attorney and change of correspondence address. However, when changing the address in the records of the Office, the Office entered applicant's telephone number as applicant's zip code. Despite this error some subsequent mailings reached the

[1] To an incorrect address as discussed in this decision for the mailing of the notice of allowance.

applicant while other mailings were returned as undeliverable. On November 30, 2009, the Office corrected this error.

Under the circumstances, withdrawal of the holding of abandonment is appropriate. The petition includes payment of the Issue Fee; and the Issue Fee transmittal.

Since consideration of the petition under 37 CFR 1.137(a) is unnecessary, the fee for such consideration is being refunded.

The holding of abandonment is hereby **WITHDRAWN**.

The petition under § 1.181 is **GRANTED**.

No fee is required on petition under § 1.181.

The application is being forwarded to the Office of Patent Publication for withdrawal of the holding of abandonment and processing of the application into a patent.

Telephone inquiries related to this decision should be directed to the undersigned at (571) 272-3219.

Nancy Johnson
Senior Petitions Attorney
Office of Petitions

UNITED STATES PATENT AND TRADEMARK OFFICE

Commissioner for Patents
United States Patent and Trademark Office
P.O. Box 1450
Alexandria, VA 22313-1450
www.uspto.gov

MAILED
JUL 18 2011
OFFICE OF PETITIONS

**WILEY REIN LLP**
**1776 K. STREET N.W.**
**WASHINGTON DC 20006**

| | | |
|---|---|---|
| In re Application of | : | |
| Jan Henrik JEBSEN et al. | : | |
| Application No. 10/454,778 | : | DECISION ON PETITION |
| Filed: June 05, 2003 | : | |
| Attorney Docket No. 81005-0006 | : | |

This is a decision on the petition, filed May 13, 2011, which is being treated as a petition under 37 CFR 1.181 (no fee) requesting withdrawal of the holding of abandonment in the above-identified application.

The petition is **GRANTED**.

This application became abandoned as a result of petitioner's failure to file an appeal brief (and fee required by 37 CFR 41.20(b)(2)) within the time period provided in 37 CFR 41.37(a)(1). As an appeal brief (and appeal brief fee) was not filed within two (2) months of the Notice of Appeal filed October 13, 2010, and no extensions of time under the provisions of 37 CFR 1.136(a) were obtained, the appeal was dismissed and the proceedings as to the rejected claims were terminated. See 37 CFR 1.197(b). As no claim was allowed, the application became abandoned on December 14, 2010. *See* MPEP 1215.04.

Petitioner request that the Notice of Abandonment mailed on April 25, 2011, be withdrawn. Petitioner asserts that an Appeal Brief was not due to be filed until May 13, 2011 along with a five (5) month extension of time as permitted under 37 CFR 1.136.

A review of the file indicates that an Appeal Brief along with a five (5) month extension of time was not due until May 13, 2011, which would have rendered the reply timely if received.

Here, the mailing of the Notice of Abandonment by the Primary Examiner in charge of the application is on its face erroneous as to the substance and form. The Office regrets the error. The present application is not in fact abandoned. Patent rules clearly provide for extension of times under 37 CFR 1.136b to file to an Appeal Brief. Petitioner has timely filed a five (5) month extension of time and an Appeal Brief. Accordingly, the Notice of Abandonment is withdrawn and the application is restored to pending status.

Telephone inquiries concerning this decision should be directed to the Michelle R. Eason at (571) 272-4231.

This application is being referred to Technology Center AU 3641 for appropriate action in the normal course of business on the Appeal Brief filed with the petition on May 13, 2011.

Thurman K. Page
Petitions Examiner
Office of Petitions

UNITED STATES PATENT AND TRADEMARK OFFICE

Commissioner for Patents
United States Patent and Trademark Office
P.O. Box 1450
Alexandria, VA 22313-1450
www.uspto.gov

MAILED
AUG 15 2011
OFFICE OF PETITIONS

**WILEY REIN LLP**
**1776 K STREET N.W.**
**WASHINGTON DC 20006**

| | | |
|---|---|---|
| In re Application of | : | |
| Jan Henrik Jebsen et al | : | |
| Application No. 10/454,778 | : | DECISION ON REQUEST FOR REFUND |
| Filed: June 5, 2003 | : | |
| Attorney Docket No. 81005-0006 | : | |

This is a decision on the Request For Refund filed August 8, 2011.

The request is **GRANTED**.

Applicant files the above request for refund and states that, "As noted in the Decision on Petition granting the request to withdraw abandonment, dated July 18, 2011, the Notice of Abandonment was "on its fact erroneous as to substance and form." The Decision on Petition also indicates that the request was being "treated as a petition under 37 CFR 1.181 (no fee)." Accordingly, no fee was required and Applicants respectfully request a refund of the petition fee paid.

In view of the above, the request for refund is granted. As authorized, the $130.00 petition fee submitted on May 13, 2011, is being credited to applicant's credit card account as it is the method in which the fee was paid.

Any questions concerning this matter may be directed to the undersigned at (571) 272-3208.

/KOC/
Karen Creasy
Petitions Examiner
Office of Petitions

UNITED STATES PATENT AND TRADEMARK OFFICE

COMMISSIONER FOR PATENTS
UNITED STATES PATENT AND TRADEMARK OFFICE
P.O. BOX 1450
ALEXANDRIA, VA 22313-1450
www.uspto.gov

MAILED
NOV 23 2010
OFFICE OF PETITIONS

WHITHAM, CURTIS & CHRISTOFFERSON & COOK, P.C.
11491 SUNSET HILLS ROAD
SUITE 340
RESTON VA 20190

| | | |
|---|---|---|
| In re Patent No. 6,859,372 | : | |
| Issued: 02/22/2005 | : | |
| Application No. 10/454,779 | : | NOTICE |
| Filed: 06/05/2003 | : | |
| Attorney Docket No. 01640409AA | : | |

This is a notice regarding your request for acceptance of a fee deficiency submission under 37 CFR 1.28 filed October 15, 2010.

The Office no longer investigates or rejects original or reissue patent under 37 CFR 1.56. **1098 Off. Gaz. Pat. Office 502 (January 3, 1989)**. Therefore, nothing in this Notice is intended to imply that an investigation was done.

Your fee deficiency submission under 37 CFR 1.28 is hereby **ACCEPTED**.

This patent is no longer entitled to small entity status. Accordingly, all future fees paid in this patent must be paid at the large entity rate.

Inquiries related to this communication should be directed to the undersigned at (571) 272-3211.

Christina Tartera Donnell

Christina Tartera Donnell
Senior Petitions Attorney
Office of Petitions

UNITED STATES PATENT AND TRADEMARK OFFICE

COMMISSIONER FOR PATENTS
UNITED STATES PATENT AND TRADEMARK OFFICE
P.O. BOX 1450
ALEXANDRIA, VA 22313-1450
www.uspto.gov

**MAILED**

SEP 08 2010

**OFFICE OF PETITIONS**

SPRINT
6391 SPRINT PARKWAY
KSOPHT0101-Z2100
OVERLAND PARK KS 66251-2100

In re Patent No. 7,689,223
Issued: March 30, 2010
Application No. 10/454,858
Filed: June 5, 2003
Dkt. No.: 2154

: DECISION ON APPLICATION FOR
: PATENT TERM ADJUSTMENT and
: NOTICE OF INTENT TO ISSUE
: CERTIFICATE OF CORRECTION
:

This is a decision on the application for patent term adjustment timely filed on May 28, 2010. The application for patent term adjustment asserts that the patent is entitled to a patent term adjustment of 1,357 days (763 days under 37 CFR 1.702(a) + 849 days under 37 CFR 1.702(b) – 224 overlapping days - 31 days of applicant delay under 37 CFR 1.704).

The request for reconsideration of the correct the patent term adjustment indicated on the above-identified patent is **GRANTED to the extent indicated herein**.

The patent is entitled to an overall adjustment of 1,279 days.

The patent is entitled to an overall adjustment under 37 CFR 1.703(a) of 763 days. (539 days under 37 CFR 1.703(a)(1) + 30 days under 37 CFR 1.703(a)(2) + 194 days under 37 CFR 1.703(a)(4)).

The patent accrued 1,228 days of adjustment pursuant to 37 CFR 1.703(b), from June 6, 2006 to October 15, 2009, the day before the date that the request for continued examination (RCE) was filed. As the period from the filing date of the request for continued examination (RCE) to the issue date of the patent is not included in the "B" delay period, the over three year period begins on June 6, 2006 and ends on October 15, 2009, the day before the RCE was filed, and not October 16, 2009, the day of filing of the RCE, as perhaps calculated by patentees. See, 35 U.S.C. 154(b)(1)(B)(i).

However, the period of adjustment under 37 CFR 1.702(b) and 1.703(b) does not include the number of days, if any, in the period beginning on the date on which a notice of appeal to the Board of Patent Appeals and Interferences was filed under 35 U.S.C. 134 and § 41.31 of this title and ending on the date of the last decision by the Board of Patent Appeals and Interferences or by a Federal court in an appeal under 35 U.S.C. 141 or a civil action under 35 U.S.C. 145, or on

the date of mailing of either an action under 35 U.S.C. 132, or a notice of allowance under 35 U.S.C. 151, whichever occurs first, if the appeal did not result in a decision by the Board of Patent Appeals and Interferences. See, 37 CFR 1.702(b)(4) and 1.703(b)(4).

Thus, the period of adjustment under 37 CFR 1.703(b) does not include a total of 487 days, as supported by 37 CFR 1.703(b)(4). The first period under 37 CFR 1.703(b)(4) commenced August 6, 2006, the date that the first Notice of Appeal was filed, and ended November 20, 2006, the date that the non-final Office action was mailed in response thereto. The second period under 37 CFR 1.703(b)(4) commenced February 18, 2008, the date that the second Notice of Appeal was filed, and ended March 3, 2009, the date that non-final Office action was mailed in response thereto. Accordingly, as of the time of issuance, the period of adjustment under 37 CFR 1.702(b) and 1.703(b) totals 741 days (1,228 days – 487 days)

However, the period of adjustment granted under 37 CFR 1.703 shall not exceed the actual number of days the issuance of the patent was delayed. The period of adjustment of 194 days under 37 CFR 1.703(a)(4) overlaps with the period of adjustment of 741 days under 37 CFR 1.703(b), the period of 194 days of adjustment is not included in the overall patent term adjustment accorded the patent. See, 37 CFR 1.703(f).

The patent term adjustment is properly reduced 31 days pursuant to 37 CFR 1.704(b).

In view thereof, the patent is entitled to an overall adjustment of 1,279 days (763 days under § 1.702(a) + 1,228 days under § 1.702(b) - 487 under § 1.703(b)(4) – 194 overlapping days pursuant § 1.703(f) – 31 days of applicant delay under § 1.704)).

The Office will *sua sponte* issue a certificate of correction. Pursuant to 37 CFR 1.322, the Office will not issue a certificate of correction without first providing assignee or patentee an opportunity to be heard. Accordingly, patentees are given **one (1) month or thirty (30) days**, whichever is longer, from the mail date of this decision to respond. No extensions of time will be granted under § 1.136. See 37 CFR 1.323(a)(4).

The Office acknowledges the submission of the $200.00 fee set forth in 37 CFR 1.18(e). No additional fees are required.

Nothing in this decision shall be construed as a waiver of the requirement of 35 U.S.C. 154(b)(4) that any civil action by an applicant dissatisfied with a determination made by the Director under 35 U.S.C. 154(b)(3) be filed in the United States District Court for the District of Columbia within 180 days after the grant of the patent.

The file does not indicate a change of address has been submitted, although the address given on the petition differs from the address of record. If appropriate, a change of address should be filed in accordance with MPEP 601.03. A courtesy copy of this decision is being mailed to the address given on the petition; however, the Office will mail all future correspondence solely to the address of record.

The application is being forwarded to the Certificates of Corrections Branch for issuance of a certificate of correction. The Office will issue a certificate of correction indicating that the term of the above-identified patent is extended or adjusted by 1,279 days.

Telephone inquiries specific to this matter should be directed to the undersigned at (571) 272-3205.

*/ALESIA M. BROWN/*

Alesia M. Brown
Senior Petitions Attorney
Office of Petitions

Enclosure: Copy of DRAFT Certificate of Correction

CC: Lawrence H. Aaronson
300 South Wacker Drive
Chicago, IL 60606

UNITED STATES PATENT AND TRADEMARK OFFICE

# CERTIFICATE OF CORRECTION

PATENT : 7,689,223

DATED : **March 30, 2010** **DRAFT**

INVENTOR(S) : Lewis

It is certified that error appears in the above-identified patent and that said Letters Patent is hereby corrected as shown below:

On the cover page,

[*] Notice: Subject to any disclaimer, the term of this patent is extended or adjusted under 35 USC 154(b) by 1,281 days

Delete the phrase "by 1,281 days" and insert – by 1,279 days--

UNITED STATES PATENT AND TRADEMARK OFFICE

Commissioner for Patents
United States Patent and Trademark Office
P.O. Box 1450
Alexandria, VA 22313-1450
www.uspto.gov

HONEYWELL/FOX ROTHSCHILD
Patent Services
101 Columbia Road
Morristown NJ 07962

MAILED
MAR 06 2012
OFFICE OF PETITIONS

| | | |
|---|---|---|
| In re Application of | : | |
| Dodd et al. | : | |
| Application No. 10/455,067 | : | DECISION ON PETITION |
| Filed: June 5, 2003 | : | |
| Attorney Docket No. RDH28628 USA CIP - 4732 | : | |

This is a decision on the petition under the unintentional provisions of 37 CFR 1.137(b), filed January 25, 2012, to revive the above-identified application.

The petition is **GRANTED**.

The application became abandoned for failure to submit a substitute oath/declaration in a timely manner in reply to the corrected notice of allowability, mailed September 20, 2011, which set a period for reply of three (3) months. Accordingly, this application became abandoned on December 21, 2011. A Notice of Abandonment was mailed on January 9, 2012.

The petition satisfies the requirements of 37 CFR 1.137(b) in that petitioners have supplied (1) the reply in the form of a substitute declaration, (2) the petition fee of $1,860.00, and (3) a proper statement of unintentional delay.

The file does not indicate a change of address has been submitted, although the address given on the petition differs from the address of record. If appropriate, a change of address should be filed in accordance with MPEP 601.03. A courtesy copy of this decision is being mailed to the address given on the petition; however, the Office will mail all future correspondence solely to the address of record.

This application is being referred to the Office of Data Management for processing into a patent.

Telephone inquiries concerning this decision should be directed to the undersigned at (571)272-3230.

Shirene Willis Brantley

Shirene Willis Brantley
Senior Petitions Attorney
Office of Petitions

CC: J. ERIC SUMNER
EAGLEVIEW CORPORATE CENTER
747 CONSTITUTION DRIVE, SUITE 100
EXTON PA 19341

UNITED STATES PATENT AND TRADEMARK OFFICE

Commissioner for Patents
United States Patent and Trademark Office
P.O. Box 1450
Alexandria, VA 22313-1450
www.uspto.gov

VIDAS, ARRETT & STEINKRAUS, P.A.
SUITE 400, 6640 SHADY OAK ROAD
EDEN PRAIRIE MN 55344

**MAILED**

SEP 08 2010

**OFFICE OF PETITIONS**

| | | |
|---|---|---|
| In re Application of | : | |
| PALASIS et al. | : | |
| Application No. 10/455,298 | : | ON APPLICATION FOR |
| Filed: 06/06/2003 | : | PATENT TERM ADJUSTMENT |
| Docket No. S63.2-13992-US01 | : | |

This is in response to the "Request for Reconsideration of Patent Term Adjustment, 37 C.F.R. § 1.705" filed March 22, 2010, which is being treated as a petition under 37 CFR 1.705(b). Applicants submit that the correct patent term adjustment to be indicated on the patent is 993 days, not 699 days as calculated by the Office as of the mailing of the initial determination of patent term adjustment. Applicants seek this correction solely on the basis that the Office will take in excess of three years to issue this patent.

As the instant application for patent term adjustment requests reconsideration of the patent term adjustment as it relates to the Office's failure to issue the patent within three years of the filing date, the application for patent term adjustment under 37 CFR 1.705(b) is **DISMISSED as PREMATURE**.

Knowledge of the actual date the patent issues is required to calculate the amount, if any, of additional patent term patentees are entitled to for Office failure to issue the patent within three years. See 37 CFR 1.702(b). (This is true even where a request for continued examination (RCE) was filed). The computer will not undertake the § 1.702(b) calculation until the actual date of issuance of the patent has been determined. Likewise, the computer will not calculate any further Office delay under 37 CFR 1.702(a)(4) or applicant delay under 37 CFR

1.704(c)(10) until the actual date of issuance of the patent has been determined. As such, the Office cannot make a determination on the correctness of the patent term adjustment until the patent has issued.

Requesting reconsideration of the patent term adjustment to be indicated on the patent under 37 CFR 1.705(b) based on the initial determination of patent term adjustment and a projected issuance date of the patent (or even the filing date of the request for continued examination) is premature. Accordingly, it is appropriate to dismiss such a request as premature.

Rather than file an application for patent term adjustment under 37 CFR 1.705(b) contesting the 37 CFR 1.702(b) calculation at the time of the mailing of the notice of allowance, applicants are advised that they may wait until the time of the issuance of the patent and file a request for reconsideration of the patent term adjustment pursuant to 37 CFR 1.705(d). As the USPTO does not calculate the amount of time earned pursuant to 37 CFR 1.702(b) until the time of the issuance of the patent, the Office will consider any request for reconsideration of the patent term adjustment due to an error in the calculation of 37 CFR 1.702(b) to be timely if the request for reconsideration is filed within two months of the issuance of the patent. However, as to all other bases for contesting the initial determination of patent term adjustment received with the notice of allowance, applicants must timely file an application for patent term adjustment prior to the payment of the issue fee.[1]

The Office acknowledges submission of the $200.00 fee set forth in 37 CFR 1.18(e) for consideration of the application for patent term adjustment under 37 CFR 1.705(b).

---

[1] For example, if applicants dispute both the calculation of patent term adjustment under 37 CFR 1.702(a)(1) for Office failure to mail a first Office action or notice of allowance not later than fourteen months after the date on which the application was filed, and under 37 CFR 1.702(b) for Office failure to issue a patent within three years of the actual filing date of the application, then applicants must still timely file an application for patent term adjustment prior to the payment of the issue fee to contest the calculation of Office delay in issuing a first Office action or notice of allowance. See 37 CFR 1.705(b) and 35 U.S.C. 154(b)(3)(B). A dispute as to the calculation of the § 1.702(a)(1) period raised on request for reconsideration of patent term adjustment under 37 CFR 1.705(d) will be dismissed as untimely filed.

Any request for reconsideration of the patent term adjustment indicated on the patent must be timely filed within two months after issuance pursuant to 37 CFR 1.705(d) and must include payment of the required fee under 37 CFR 1.18(e).

Telephone inquiries specific to this decision should be directed to the undersigned at (571) 272-3211.

C. T. Donnell

Christina Tartera Donnell
Senior Petitions Attorney
Office of Petitions

UNITED STATES PATENT AND TRADEMARK OFFICE

UNITED STATES DEPARTMENT OF COMMERCE
United States Patent and Trademark Office
Address: COMMISSIONER FOR PATENTS
P.O. Box 1450
Alexandria, Virginia 22313-1450
www.uspto.gov

| APPLICATION NO. | FILING DATE | FIRST NAMED INVENTOR | ATTORNEY DOCKET NO. | CONFIRMATION NO. |
|---|---|---|---|---|
| 10/455,398 | 06/06/2003 | Josef Schiefer | YOR920030147US1 | 4663 |

21254 7590 11/03/2010
MCGINN INTELLECTUAL PROPERTY LAW GROUP, PLLC
8321 OLD COURTHOUSE ROAD
SUITE 200
VIENNA, VA 22182-3817

| EXAMINER |
|---|
| FISHER, PAUL R |

| ART UNIT | PAPER NUMBER |
|---|---|
| 3689 | |

| MAIL DATE | DELIVERY MODE |
|---|---|
| 11/03/2010 | PAPER |

**Please find below and/or attached an Office communication concerning this application or proceeding.**

The time period for reply, if any, is set in the attached communication.

UNITED STATES PATENT AND TRADEMARK OFFICE

Commissioner for Patents
United States Patent and Trademark Office
P.O. Box 1450
Alexandria, VA 22313-1450
www.uspto.gov

NOV - 3 2010

MCGINN INTELLECTUAL PROPERTY LAW GROUP, PLLC.
8321 OLD COURTHOUSE ROAD
SUITE 200
VIENNA, VIRGINIA 22182-3817

| | | |
|---|---|---|
| In re Application of | : | |
| Josef Schiefer et.al. | : | DECISION ON PETITION |
| Application No. 10/455,398 | : | UNDER 37 CFR §1.181 |
| Filed: June 6, 2003 | : | |
| Attorney Docket No.: YORK920031047US1 | : | |

For: METHOD AND STRUCTURE FOR NEAR REAL-TIME DYNAMIC ETL (EXTRACTION, TRANSFORMATION, LOADING) PROCESSING

This is a decision on applicants' petition under 37 CFR 1.181 filed August 6, 2010 to have a 37 CFR 1.132 declaration entered on the record and considered after a Final rejection.

The petition is **GRANTED to the extent indicated below.**

The record reflects that on March 31, 2010 a Final Office action was mailed to applicant. Applicant filed an After Final Amendment on June 1, 2010 requesting reconsideration of the Final rejection and stating that applicant would also shortly file a Rule 132 Declaration in preparation for Appeal. An Advisory Action was mailed to applicant on June 22, 1010 stating that the arguments in the request for reconsideration were not persuasive and thus the rejections in the Final Office action were being maintained. On June 29, 2010 applicant filed a Rule 132 Declaration. Applicant filed a Notice of Appeal and a Pre-Appeal Brief Request For Review on June 30, 2010. An Advisory Action was mailed on July 19, 2010 incorrectly stating that the affidavit or other evidence filed after the date of filing a Notice of Appeal, but prior to the date of filing a brief will not be entered. A Notice of Panel Decision from Pre-Appeal Brief Review was mailed on July 22, 2010 stating that the applicant should proceed to the Board of Patent Appeals and Interferences. On August 6, 2010 applicant filed this Petition for Review. On August 28, 2010 applicant filed an Appeal Brief.

A review of the record shows that the Rule 132 Declaration was filed on June 29, 2010 while the Notice of Appeal and a Pre-Appeal Request were filed on June 30, 2010. Therefore, the Advisory Action mailed on July 19, 2010 incorrectly stating that the

affidavit or other evidence was filed after the date of filing of a Notice of Appeal was in error. The Advisory Action of June 30, 2010 is therefore in error and is hereby **VACATED.**

The application is being forwarded to the Examiner of record for proper consideration of the Rule 132 Declaration filed on June 29, 2010.

Wynn Coggins, Director
Patent Technology Center 3600
(571) 272-5350

Jm/snm: 10/29/10

SM

UNITED STATES PATENT AND TRADEMARK OFFICE

Commissioner for Patents
United States Patent and Trademark Office
P.O. Box 1450
Alexandria, VA 22313-1450
www.uspto.gov

MAILED
DEC 02 2011
OFFICE OF PETITIONS

Paper No.

COLOPLAST A/S
Attention: Corporate Patents
Holtedam 1
DK-3050 Humlebaek
DENMARK

| | |
|---|---|
| In re Application of<br>Suslian et al.<br>Application No. 10/455,465<br>Filed: June 4, 2003<br>Attorney Docket No. 09736-132002<br>Title: METHOD FOR TREATING URINARY INCONTINENCE IN WOMEN AND IMPLANTABLE DEVICE INTENDED TO CORRECT URINARY INCONTINENCE | DECISION ON PETITION UNDER 37 C.F.R. § 1.137(B) |

This is a decision on the petition pursuant to 37 C.F.R. § 1.137(b), filed November 7, 2011, to revive the above-identified application.

The petition pursuant to 37 C.F.R. § 1.137(b) is **DISMISSED**.

The above-identified application became abandoned for failure to reply in a timely manner to the notice of December 30, 2004, which set a period for reply of one month. No response was received, and no extensions of time under the provisions of 37 C.F.R. § 1.136(a) were requested. Accordingly, the above-identified application became abandoned on March 31, 2005. A notice of abandonment was mailed on June 3, 2005.

With this petition, Petitioner has submitted the petition fee, the required statement of unintentional delay, and an amendment. The first and second requirements of Rule 1.137(b) have been met. The fourth requirement of Rule 1.137(b) is not applicable, as a terminal disclaimer is not required.[1]

1 See Rule 1.137(d).

Regarding the third requirement, Applicant has not established that the entire period of delay was unintentional. It is noted that the present petition was not filed until more than six years and five months had passed since the mailing of the notice of abandonment. It is not clear why the Applicant chose to take no course of action for such a long period of time. It does not appear that any action was taken to further the prosecution of this application, subsequent to the mailing of the notice of abandonment on June 3, 2005, for more than six years and five months.

As such, it appears that the Applicant intentionally allowed this application to go abandoned. The extended inaction of the Applicant appears to be intentional.

A discussion follows.

In order for a petition under 37 C.F.R. § 1.137(b) to be granted, the holder of the rights to the application must have unintentionally allowed the application to go abandoned, and a delay resulting from a deliberately chosen course of action on the part of the applicant is not an "unintentional" delay within the meaning of 37 C.F.R. § 1.137(b).

The periods of delay:

There are three periods to be considered during the evaluation of a petition under 37 C.F.R. § 1.137(b):

(1) the delay in reply that originally resulted in the abandonment;
(2) the delay in filing an initial petition pursuant to 37 C.F.R. § 1.137(b) to revive the application; and
(3) the delay in filing a grantable petition pursuant to 37 C.F.R. § 1.137(b) to revive the application.

Currently, the delay has not been shown to the satisfaction of the Director to be unintentional for periods (1) or (2).

As to Period (1), the patent statute at 35 U.S.C. § 41(a)(7) authorizes the Director to revive an "unintentionally abandoned application." The legislative history of Public Law 97-247 reveals that the purpose of 35 U.S.C. § 41(a)(7) is to permit the Office to have more discretion than in 35 U.S.C. §§ 133 or 151 to revive abandoned applications in appropriate circumstances, but places a limit on this discretion, stating that "[u]nder this section a petition accompanied by either a

fee of $500 or a fee of $50 **would not be granted where the abandonment** or the failure to pay the fee for issuing the patent **was intentional** as opposed to being unintentional or unavoidable." [emphasis added]. See H.R. Rep. No. 542, 97th Cong., 2d Sess. 6-7 (1982), *reprinted in* 1982 U.S.C.C.A.N. 770-71. The revival of an intentionally abandoned application is antithetical to the meaning and intent of the statute and regulation.

35 U.S.C. § 41(a)(7) authorizes the Commissioner to accept a petition "for the revival of an unintentionally abandoned application for a patent." As amended December 1, 1997, 37 C.F.R. § 1.137(b)(3) provides that a petition under 37 C.F.R. § 1.137(b) must be accompanied by a statement that the delay was unintentional, but provides that "[t]he Commissioner may require additional information where there is a question whether the delay was unintentional." Where, as here there is a question whether the initial delay was unintentional, the Applicant must meet the burden of establishing that the delay was unintentional within the meaning of 35 U.S.C. § 41(a)(7) and 37 C.F.R. § 1.137(b). See In re Application of G, 11 USPQ2d 1378, 1380 (Comm'r Pats. 1989); 37 CFR 1.137(b). Here, in view of the inordinate delay of more than six years and five months in resuming prosecution, there is a question whether the entire delay was unintentional. Applicant should note that the issue is not whether some of the delay was unintentional by any party; rather, the issue is whether the entire delay has been shown to the satisfaction of the Director to be unintentional.

The question under 37 C.F.R. § 1.137(b) for period (1) is whether the delay on the part of the party having the right or authority to reply to avoid abandonment (or not reply) was unintentional. Accordingly, any renewed petition must clearly identify the party having the right to reply to avoid abandonment (the Applicant). That party, in turn must explain what effort(s) was made to reply to the notice of December 30, 2004, which explicitly indicated that a previously-made amendment was non-responsive. If no effort was made to continue prosecution, then that party must explain why the delay in this application does not result from a deliberate course of action (or inaction). It is noted that Petitioner is listed as an attorney of record due to the submission of a Power of Attorney concurrently with this petition. Therefore, it does not appear that Petitioner, Nick Baumann, Reg. No. 56,161, has firsthand knowledge of the facts and circumstances regarding the abandonment of this application. As such, both **the Applicant and the former attorney of record should explain why this**

**application became abandoned subsequent to the mailing of the notice of December 30, 2004. Statements from each of these individuals must be provided. It must be explained why no response was submitted to the notice of December 30, 2004 for such an extended period of time.**

As the courts have made clear, it is pointless for the USPTO to revive a long abandoned application without an adequate showing that the delay did not result from a deliberate course of action. See Lawman Armor v. Simon, 2005 U.S. Dist. LEXIS 10843, 74 USPQ2d 1633 (DC EMich 2005); Field Hybrids, LLC v. Toyota Motor Corp., 2005 U.S. Dist. LEXIS 1159 (D. Minn Jan. 27, 2005); Lumenyte Int'l Corp. v. Cable Lite Corp., Nos. 96-1011, 96-1077, 1996 U.S. App. LEXIS 16400, 1996 WL 383927 (Fed. Cir. July 9, 1996)(unpublished) (patents held unenforceable due to a finding of inequitable conduct in submitting an inappropriate statement that the abandonment was unintentional).

**As to Period (2), where the applicant deliberately chose not to seek or persist in seeking the revival of an abandoned application, or where the applicant deliberately chooses to delay seeking the revival of an abandoned application, the resulting delay in seeking revival of the abandoned application cannot be considered as "unintentional" within the meaning of 37 C.F.R. § 1.137(b).**[2]

The language of both 35 U.S.C. § 41(a)(7) and 37 C.F.R. § 1.137(b) are clear and unambiguous, and furthermore, without qualification. That is, the delay in filing the reply during prosecution, as well as in filing the petition seeking revival, must have been, without qualification, "unintentional" for the reply to now be accepted on petition. The Office requires that the entire delay be at least unintentional as a prerequisite to revival of an abandoned application to prevent abuse and injury to the public. See H.R. Rep. No. 542, 97th Cong., 2d Sess. 7 (1982), reprinted in 1982 U.S.C.C.A.N. 771 ("[i]n order to prevent abuse and injury to the public the Commissioner . . . could require applicants to act promptly after becoming aware of the abandonment"). The December 1997 change to 37 C.F.R. § 1.137 did not create any new right to overcome an intentional delay in seeking revival, or in renewing an attempt at seeking revival, of an abandoned application. See Changes to Patent Practice and Procedure; Final Rule Notice, 62 Fed. Reg. 53131, 53160 (October 10, 1997), 1203 Off. Gaz. Pat. Office 63, 87 (October 21, 1997), which clearly stated clear that any

2 See MPEP § 711.03(c).

protracted delay (here, more than six years and five months) could trigger, as here, a request for additional information. As the courts have since made clear, a protracted delay in seeking revival, as here, requires a petitioner's detailed explanation seeking to excuse the delay as opposed to USPTO acceptance of a general allegation of unintentional delay. See Lawman Armor v. Simon, 2005 U.S. Dist. LEXIS 10843, 74 USPQ2d 1633, at 1637-8 (DC EMich 2005); Field Hybrids, LLC v. Toyota Motor Corp., 2005 U.S. Dist. LEXIS 1159 (D. Minn Jan. 27, 2005) at *21-*23. **A statement is required from both the Applicant and the present attorney of record, explaining why this petition was not filed sooner.**

**Moreover, Applicant and the present attorney of record must each explain what prompted the decision to advance the prosecution of this application after the passage of so much time. A statement from each is required.**

Punctuality and Due Diligence:

For more than a century, punctuality and due diligence, equally with good faith, have been deemed essential requisites to the success of those who seek to obtain the special privileges of the patent law, and they are demanded in the interest of the public and for the protection of rival inventors. See: Porter v. Louden, 7 App.D.C. 64 (C.A.D.C. 1895), citing Wollensak v. Sargent, 151 U.S. 221, 228, 38 L. Ed. 137, 14 S. Ct. 291 (1894).

Similarly, an invention benefits no one unless it is made public, and the rule of diligence should be so applied as to encourage reasonable promptness in conferring this benefit upon the public. Automatic Electric Co. v. Dyson, 52 App. D.C. 82; 281 F. 586 (C.A.D.C. 1922). Generally, 35 U.S.C. §6; 37 C.F.R.§§1.181, 182, 183.

The lengthy period of inaction does not appear to be consistent with the requirements of punctuality, due diligence, good faith, and the encouragement of reasonable promptness.

**On renewed petition, each of these issues will need to be addressed, and statements from the Applicant, the former attorney of record, and the present attorney of record must be included, if it is to be established that the entire period of delay was unintentional.**

Petitioner is reminded that any statement of facts should be made by one having firsthand knowledge of the facts set forth therein.

Any reply must be submitted within **TWO MONTHS** from the mail date of this decision. Extensions of time under 37 C.F.R. § 1.136(a) are permitted. The reply should include a cover letter entitled "Renewed Petition pursuant to 37 C.F.R. § 1.137(b)". This is not a final agency action within the meaning of 5 U.S.C § 704.

**Thereafter, there will be no further reconsideration of this matter.**[3]

The renewed petition should indicate in a prominent manner that the attorney handling this matter is Paul Shanoski, and may be submitted by mail,[4] hand-delivery,[5] or facsimile.[6] Registered users of EFS-Web may alternatively submit a response to this decision via EFS-Web.[7]

If responding by mail, Applicant is advised not to place the undersigned's name on the envelope. Only the information that appears in the footnote should be included - adding anything else to the address will delay the delivery of the response to the undersigned.

Telephone inquiries regarding *this decision* should be directed to the undersigned at (571) 272-3225.[8] All other inquiries concerning examination procedures should be directed to the Technology Center.

Paul Shanoski

Paul Shanoski
Senior Attorney
Office of Petitions

---

3 If, on request for reconsideration, Applicant fails to satisfy the showings burden required: (a) the resulting decision may be one viewed as final agency action; and (b) provisions for reconsideration, such as those at 37 C.F.R. § 1.137(e), will **not** apply to that decision.
4 Mail Stop Petition, Commissioner for Patents, United States Patent and Trademark Office, P.O. Box 1450, Alexandria, VA, 22313-1450.
5 Customer Window, Randolph Building, 401 Dulaney Street, Alexandria, VA, 22314.
6 (571) 273-8300; please note this is a central facsimile number.
7 https://sportal.uspto.gov/authenticate/authenticateuserlocalepf.html
8 Applicant will note that all practice before the Office should be in writing, and the action of the Office will be based exclusively on the written record in the Office. See 37 C.F.R. § 1.2. As such, Applicant is reminded that no telephone discussion may be controlling or considered authority for Applicant's further action(s).

UNITED STATES PATENT AND TRADEMARK OFFICE

Commissioner for Patents
United States Patent and Trademark Office
P.O. Box 1450
Alexandria, VA 22313-1450
www.uspto.gov

**GREGORY V. MADDEN**
**136 S. WISCONSIN ST.**
**PORT WASHNGTON WI 53074**

MAILED

AUG 1 2 2010

OFFICE OF PETITIONS

| | | |
|---|---|---|
| In re Application of | : | |
| Justin L. VODEN | : | |
| Application No. 10/455,666 | : | DECISION ON PETITION |
| Filed: June 5, 2003 | : | TO WITHDRAW |
| Attorney Docket No. JLV74620.094 | : | FROM RECORD |

This is a decision on the Request to Withdraw as attorney or agent of record under 37 C.F.R. § 1.36(b), filed July 20, 2010.

The request is **NOT APPROVED because it is moot.**

A review of the file record indicates that the power of attorney to Gregory V. Madden and the attorneys of record associated with Customer No. 26629, has been revoked by the applicant of the patent application on July 30, 2010. Accordingly, the request to withdraw under 37 C.F.R. § 1.36(b) is moot.

Telephone inquires concerning this decision should be directed to undersigned at (571) 272- 6735.

/dcg/
Diane C. Goodwyn
Petitions Examiner
Office of Petitions

cc: JUSTIN L. VODEN
S70 W35543 ROAD X
EAGLE WI 53119

cc: MICHAEL BEST & FRIEDRICH LLP
100 E WISCONSINE
SUITE 3300
MILWAUKEE WI 53202

UNITED STATES PATENT AND TRADEMARK OFFICE

UNITED STATES DEPARTMENT OF COMMERCE
United States Patent and Trademark Office
Address: COMMISSIONER FOR PATENTS
P.O. Box 1450
Alexandria, Virginia 22313-1450
www.uspto.gov

| APPLICATION NUMBER | FILING OR 371(C) DATE | FIRST NAMED APPLICANT | ATTY. DOCKET NO./TITLE |
|---|---|---|---|
| 10/455,666 | 06/05/2003 | Justin L. Voden | 028657-9002-US01 |

**CONFIRMATION NO. 5901**

**POA ACCEPTANCE LETTER**

23409
MICHAEL BEST & FRIEDRICH LLP
100 E WISCONSIN AVENUE
Suite 3300
MILWAUKEE, WI 53202

*OC000000042948574*

Date Mailed: 08/11/2010

## NOTICE OF ACCEPTANCE OF POWER OF ATTORNEY

This is in response to the Power of Attorney filed 07/30/2010.

The Power of Attorney in this application is accepted. Correspondence in this application will be mailed to the above address as provided by 37 CFR 1.33.

/snguyen/

Office of Data Management, Application Assistance Unit (571) 272-4000, or (571) 272-4200, or 1-888-786-0101

UNITED STATES PATENT AND TRADEMARK OFFICE

UNITED STATES DEPARTMENT OF COMMERCE
United States Patent and Trademark Office
Address: COMMISSIONER FOR PATENTS
P.O. Box 1450
Alexandria, Virginia 22313-1450
www.uspto.gov

| APPLICATION NUMBER | FILING OR 371(C) DATE | FIRST NAMED APPLICANT | ATTY. DOCKET NO./TITLE |
|---|---|---|---|
| 10/455,666 | 06/05/2003 | Justin L. Voden | JLV74620.094 |

**CONFIRMATION NO. 5901**

**POWER OF ATTORNEY NOTICE**

26629
ZIOLKOWSKI PATENT SOLUTIONS GROUP, SC (ZPS)
136 S WISCONSIN ST
PORT WASHINGTON, WI 53074

*OC000000042948480*

Date Mailed: 08/11/2010

## NOTICE REGARDING CHANGE OF POWER OF ATTORNEY

This is in response to the Power of Attorney filed 07/30/2010.

- The Power of Attorney to you in this application has been revoked by the applicant. Future correspondence will be mailed to the new address of record(37 CFR 1.33).

/snguyen/

Office of Data Management, Application Assistance Unit (571) 272-4000, or (571) 272-4200, or 1-888-786-0101

UNITED STATES PATENT AND TRADEMARK OFFICE

Commissioner for Patents
United States Patent and Trademark Office
P.O. Box 1450
Alexandria, VA 22313-1450
www.uspto.gov

**SCHMEISER OLSEN & WATTS**
**18 E UNIVERSITY DRIVE**
**SUITE # 101**
**MESA AZ 85201**

MAILED
NOV 30 2011
OFFICE OF PETITIONS

| | | |
|---|---|---|
| In re Patent No. 6,707,350 | : | |
| Issue Date: March 16, 2004 | : | |
| Application No. 10/456,317 | : | NOTICE |
| Filed: June 6, 2003 | : | |
| Attorney Docket No. SPEC-0905 | : | |

This is a notice regarding your request, October 31, 2011, for acceptance of a fee deficiency submission under 37 CFR 1.28.

On September 1, 1998, the Court of Appeals for the Federal Circuit held that 37 CFR 1.28(c) is the sole provision governing the time for correction of the erroneous payment of the issue fee as a small entity. **See DH Technology v. Synergystex International, Inc. 154 F.3d 1333, 47 USPQ2d 1865 (Fed. Cir. Sept. 1, 1998).**

The Office no longer investigates or rejects original or reissue applications under 37 CFR 1.56. **1098 Off. Gaz. Pat. Office 502 (January 3, 1989).** Therefore, nothing in this Notice is intended to imply that an investigation was done.

Your fee deficiency submission under 37 CFR 1.28 is hereby **ACCEPTED**.

This patent is no longer entitled to small entity status. Accordingly, all future fees paid in this patent must be paid at the large entity rate.

A courtesy copy of this decision is being mailed to the address listed on the request; however, all future correspondence will be mailed solely to the address of record.

*/Liana Walsh/*
Liana Walsh
Petitions Examiner
Office of Petition

cc: ROPES & GRAY LLP
PRUDENTIAL TOWER
800 BOYLSTON STREET
BOSTON, MA 02199

UNITED STATES PATENT AND TRADEMARK OFFICE

---

BEFORE THE
BOARD OF PATENT APPEALS AND INTERFERENCES

---

*Ex parte* VADYM BUYALSKY

Application 10/456,427
Technology Center 3700

---

DECISION ON PETITION

This is a decision on the Petition filed January 26, 2009 "under 37CFR § 1.135(b), 37 CFR § 1.181-I and MPEP § 1201 *to withdraw [the] holding of abandonment of application No.:10/456,427.*" Petition, p. 1. (emphasis in original).

*See* 75 Fed. Reg. 15,689-90 (Mar. 30, 2010) for authority of the Chief Administrative Patent Judge.

FINDINGS

1. On April 3, 2009, Appellant filed an Appeal Brief.

2. On May 11, 2009, the Examiner entered a first Notification of Non-Compliant Appeal Brief.

3. On May 27, 2009, Appellant filed a response to the first Notification of Non-Compliant Appeal Brief.

4. On September 4, 2009, the Examiner entered a second Notification of Non-Compliant Appeal Brief.

5. On September 23, 2009, Appellant filed a response to the second Notification of Non-Compliant Appeal Brief.

6. On December 8, 2009, the Examiner entered a Notice of Abandonment noting that "[t]he applicant failed to timely file a compliant appeal brief per MPEP 1205.02, as per the Non-Compliant Notice mailed on 9/4/09 ...."

7. On December 14, 2009, the Examiner entered a Communication Re: Appeal reiterating the defects in the Appeal Brief and the holding of abandonment.

8. On January 11, 2010, Appellant filed a response to the Notice of Abandonment and the Communication Re: Appeal.

9. On January 26, 2010, Appellant filed the present Petition.

10. On October 4, 2010, Appellant filed a paper inquiring about the status of the Petition.

## DISCUSSION

As is apparent from the foregoing, Appellant was given at least two opportunities to correct the Appeal Brief before the Examiner held the application to be abandoned. A review of the relevant papers uncovered no error by the Examiner. Significantly, the papers filed by Appellant pro se suggest that the principal difficulty here is a language problem. In this situation, should Appellant wish to continue to seek a patent from the present application, Appellant is advised to seek representation by a registered agent or attorney and to seek revival of the application under 37 C.F.R. § 1.137(b) – unintentional abandonment.

DECISION

In view of the foregoing, the Petition is DENIED without prejudice to Appellant filing a petition under 37 C.F.R. § 1.137(b) within one month from the mailing date hereof.

James T. Moore
Acting Chief Administrative Patent Judge

Robert H. Roche
CTRL Systems, Inc.
1004 Littlestown Pike, Suite H
Westminster, MD 21157-3026

UNITED STATES PATENT AND TRADEMARK OFFICE

UNITED STATES DEPARTMENT OF COMMERCE
United States Patent and Trademark Office
Address: COMMISSIONER FOR PATENTS
P.O. Box 1450
Alexandria, Virginia 22313-1450
www.uspto.gov

| APPLICATION NO. | FILING DATE | FIRST NAMED INVENTOR | ATTORNEY DOCKET NO. | CONFIRMATION NO. |
|---|---|---|---|---|
| 10/456,427 | 06/06/2003 | Vadym Buyalsky | | 8205 |

7590 02/25/2011

Robert H. Roche
CTRL Systems, inc.
1004 Littlestown Pike, Suite H
Westminster, MD 21157-3026

| EXAMINER |
|---|
| SCHNEIDER, CRAIG M |

| ART UNIT | PAPER NUMBER |
|---|---|
| 3753 | |

| MAIL DATE | DELIVERY MODE |
|---|---|
| 02/25/2011 | PAPER |

**Please find below and/or attached an Office communication concerning this application or proceeding.**

The time period for reply, if any, is set in the attached communication.

UNITED STATES PATENT AND TRADEMARK OFFICE

---

BEFORE THE
BOARD OF PATENT APPEALS AND INTERFERENCES

---

*Ex parte* VADYM BUYALSKY

---

Application 10/456,427
Technology Center 3700

---

DECISION ON PETITION

This is a decision on the "Petition to Revive Unintentionally Abandoned Application Under Rule 1.137(b)", filed October 25, 2010 ("Petition to Revive"). *See* 75 Fed. Reg. 15,690 (Mar. 30, 2010) for authority of the Chief Administrative Patent Judge.

FINDINGS

1. On April 3, 2009, Appellant filed an Appeal Brief.

2. On May 11, 2009, the Examiner entered a Notification of Non-Compliant Appeal Brief.

3. On May 27, 2009, Appellant filed a response to the first Notification of Non-Compliant Appeal Brief.

4. On September 4, 2009, the Examiner entered a second Notification of Non-Compliant Appeal Brief.

5. On September 23, 2009, Appellant filed a response to the second Notification of Non-Compliant Appeal Brief.

6. On December 8, 2009, the Examiner entered a Notice of Abandonment, noting that "[t]he applicant failed to timely file a compliant appeal brief per MPEP 1205.02, as per the Non-Compliant Notice mailed on 9/4/09."

7. On December 14, 2009, the Examiner entered a Communication Re: Appeal reiterating the defects in the Appeal Brief and the holding of abandonment.

8. On January 11, 2010, Appellant filed a response to the Notice of Abandonment and the Communication Re: Appeal.

9. On January 26, 2010, Appellant filed a Petition "under 37 CFR § 1.135(b), 37 CFR § 1.181-I and MPEP § 1201 *to withdraw [the] holding of abandonment of application No.: 10/456,427."* Petition, p. 1 (Emphasis in original)."

10. On October 4, 2010, Appellant filed a Status Request.

11. On October 29, 2010, the Acting Chief Administrative Patent Judge denied Appellant's petition, and advised that Appellant seek revival of the application under 37 CFR § 1.137(b) – unintentional abandonment.

12. On November 29, 2010, Appellant filed the current petition, "Petition for Revival of an Application for Patent Abandoned Unintentionally Under 37 CFR 1.137(b)" (Petition to Revive)

10. The Petition to Revive was accompanied by:

    (a) The Petition Fee; and

    (b) A statement that "applicant hereby states that the required reply from the due date for the reply until the filing of a grantable petition pursuant to paragraph (b) of Rule 1.137 was unintentional."

11. The Appellant did not file a response with the Petition to Revive

12. There are no facts know by the Office that would cause the Office to question whether either the abandonment or delay in filing the Petition to Revive was unintentional.

13. Since the application was filed after June 8, 1995, on June 7, 2007, no terminal disclaimer is required.

## DISCUSSION

As indicated above, Appellant did not comply with all of the requirements of a petition under 37 CFR § 1.137(b) for revival of an unintentionally abandoned application

## DECISION

In view of the foregoing, the Petition to Revive is DENIED.

James T. Moore
Acting Chief Administrative Patent Judge

Robert H. Roche
CTRL Systems Inc.
1004 Littlestown Pike, Suite H
Westminster, MD 21157-3026

UNITED STATES PATENT AND TRADEMARK OFFICE

Commissioner for Patents
United States Patent and Trademark Office
P.O. Box 1450
Alexandria, VA 22313-1450
www.uspto.gov

ACCENTURE CHICAGO 28164
BRINKS HOFER GILSON & LIONE
P O BOX 10395
CHICAGO IL 60610

MAILED

AUG 2 0 2010

OFFICE OF PETITIONS

| | | |
|---|---|---|
| In re Application of | : | |
| Martin Illsley | : | |
| Patent Number: 7,697,787 | : | DECISION ON REQUEST |
| Issue Date: 09/29/2009 | : | FOR RECONSIDERATION OF |
| Application No. 10/456765 | : | PATENT TERM ADJUSTMENT |
| Filing or 371(c) Date: 06/06/2003 | : | and |
| Attorney Docket No. | : | NOTICE OF INTENT TO ISSUE |
| 04/13/2010 | : | CERTIFICATE OF CORRECTION |

This is a decision on the petition filed on May 6, 2010, which is being treated as a petition under 37 CFR 1.705(d), requesting that the patent term adjustment indicated on the above-identified patent be corrected to indicate that the term of the above-identified patent is extended or adjusted by one thousand five hundred seventy-nine (1579) days.

The petition to correct the patent term adjustment indicated on the above-identified patent to indicate that the term of the above-identified patent is extended or adjusted by one thousand five hundred seventy-nine (1579) days is **GRANTED to the extent indicated herein.**

A review of the record reveals that the Office errantly assess a reduction of 71 days pursuant to 37 CFR 1.704(c)(10) in connection with the Amendment under 37 CFR 1.312, filed February 2, 2010. The reduction commenced February 2, 2010, the date that Amendment was filed, and ended March 2, 2010, the mailing date of the Office action in response to the Amendment, and is 29 days (not 71 days).

As to the "B" delay, the period of adjustment is 1064 days; however, to the extent that periods of delay attributable to the grounds specified in § 1.702 overlap, the period of adjustment granted under this section shall not exceed the actual number of days the issuance of the patent was delayed. 35 U.S.C. 154(b)(2)(A), 37 CFR 1.702(f). In this instance, the period of adjustment of 669 days pursuant to 37 CFR 1.702(a)(1) overlaps with the period of adjustment pursuant to 37 CFR 1.702(b) by 497 days. Thus the "B" period of adjustment is 567 days (1064 – 497 days).

The Office will *sua sponte* issue a certificate of correction. Pursuant to 37 CFR 1.322, the Office will not issue a certificate of correction without first providing assignee or patentee an opportunity to be heard. Accordingly, patentees are given **one (1) month or thirty (30) days**, whichever is longer, from the mail date of this decision to respond. No extensions of time will be granted under § 1.136.

Nothing in this decision shall be construed as a waiver of the requirement of 35 U.S.C. 154(b)(4) that any civil action by an applicant dissatisfied with a determination made by the Director under 35 U.S.C. 154(b)(3) be filed in the United States District Court for the District of Columbia within 180 days after the grant of the patent.

The Office acknowledges submission of the $200.00 fee set forth in 37 CFR 1.18(e). No additional fees are required.

The application is being forwarded to the Certificates of Branch for issuance of a certificate of correction. The Office will issue a certificate of correction indicating that the term of the above-identified patent is extended or adjusted by one thousand eighty-two **(1082)** days.

Telephone inquiries specific to this matter should be directed to the undersigned at (571) 272-3232.

/DW/

Derek Woods
Attorney
Office of Petitions

Enclosure: Copy of DRAFT Certificate of Correction

UNITED STATES PATENT AND TRADEMARK OFFICE

# CERTIFICATE OF CORRECTION

PATENT : 7,697,787 B2

DATED : **April 13, 2010**

INVENTOR(S) : Illsley

It is certified that error appears in the above-identified patent and that said Letters Patent is hereby corrected as shown below:

On the cover page,

[*] Notice: Subject to any disclaimer, the term of this patent is extended or adjusted under 35 USC 154(b) by 1537 days.

Delete the phrase "by 1537 days" and insert – by 1082 days--

UNITED STATES PATENT AND TRADEMARK OFFICE

Commissioner for Patents
United States Patent and Trademark Office
P.O. Box 1450
Alexandria, VA 22313-1450
www.uspto.gov

ACCENTURE CHICAGO 28164
BRINKS HOFER GILSON & LIONE
P O BOX 10395
CHICAGO IL 60610

MAILED
SEP 13 2010
OFFICE OF PETITIONS

| | | |
|---|---|---|
| In re Application of | : | |
| Martin Illsley | : | CORRECTED |
| Patent Number: 7,697,787 | : | DECISION ON REQUEST |
| Issue Date: 09/29/2009 | : | FOR RECONSIDERATION OF |
| Application No. 10/456765 | : | PATENT TERM ADJUSTMENT |
| Filing or 371(c) Date: 06/06/2003 | : | and |
| Attorney Docket No. | : | NOTICE OF INTENT TO ISSUE |
| 04/13/2010 | : | CERTIFICATE OF CORRECTION |

This is a corrected decision on the petition filed on May 6, 2010, which is being treated as a petition under 37 CFR 1.705(d), requesting that the patent term adjustment indicated on the above-identified patent be corrected to indicate that the term of the above-identified patent is extended or adjusted by one thousand five hundred seventy-nine (1579) days.

The petition to correct the patent term adjustment indicated on the above-identified patent to indicate that the term of the above-identified patent is extended or adjusted by one thousand five hundred seventy-nine (1579) days is **GRANTED**.

The Office acknowledges submission of the $200.00 fee set forth in 37 CFR 1.18(e). No additional fees are required.

On August 20, 2010 the Office mailed a "DECISION ON APPLICATION FOR PATENT TERM ADJUSTMENT and NOTICE OF INTENT TO ISSUE CERTIFICATE OF CORRECTION" indicating that the patent term adjustment had been determined to be 1082 days.

The Office notes that the decision of August 20, 2010, was issued in error as it accorded patentee 497 less days of patent term adjustment than were warranted. Accordingly, the decision of August 20, 2010, is vacated. The present decision supersedes the decision mailed on August 20, 2010, and corrects the record to reflect the correct patent term adjustment is 1579 days.

The application is being forwarded to the Certificates of Branch for issuance of a certificate of correction. The Office will issue a certificate of correction indicating that the term of the above-identified patent is extended or adjusted by **one thousand five hundred seventy-nine (1579)** days.

Telephone inquiries specific to this matter should be directed to the undersigned at (571) 272-3232.

/DW/

Derek Woods
Attorney
Office of Petitions

Enclosure: Copy of DRAFT Certificate of Correction

UNITED STATES PATENT AND TRADEMARK OFFICE

# CERTIFICATE OF CORRECTION

PATENT : 7,697,787 B2

DATED : **April 13, 2010**

INVENTOR(S) : Illsley

It is certified that error appears in the above-identified patent and that said Letters Patent is hereby corrected as shown below:

On the cover page,

[*] Notice: Subject to any disclaimer, the term of this patent is extended or adjusted under 35 USC 154(b) by 1082 days.

Delete the phrase "by 1082 days" and insert – by 1579 days--

UNITED STATES PATENT AND TRADEMARK OFFICE

Commissioner for Patents
United States Patent and Trademark Office
P.O. Box 1450
Alexandria, VA 22313-1450
www.uspto.gov

In re Patent No. 6992661
Issue Date: January 31,2006
Application No. 10456785
Filed: June 9,2003
Attorney Docket No. 04329.3069

:
:DECISION GRANTING PETITION
:UNDER 37 CFR 1.378(c)
:

This is a decision on the electronic petition, filed July 25,2011 ,under 37 CFR 1.378(c) to accept the unintentionally delayed payment of the 3.5 year maintenance fee for the above-identified patent.

The petition is **GRANTED**.

The maintenance fee is accepted, and the above-identified patent reinstated as of July 25,2011 .
This decision also constitutes notice that the fee has been accepted. An electronic copy of the petition and this decision has been created as an entry in the Image File Wrapper. Nevertheless, petitioner should print and retain an independent copy.

Telephone inquiries related to this electronic decision should be directed to the Electronic Business Center at 1-866-217-9197.

PTO/SB/66 (03-09)
Approved for use through 03/31/2012. OMB 0651-0016
U.S. Patent and Trademark Office: U.S. DEPARTMENT OF COMMERCE
Under the Paperwork Reduction Act of 1995, no persons are required to respond to a collection of information unless it displays valid OMB control number.

# PETITION TO ACCEPT UNINTENTIONALLY DELAYED PAYMENT OF MAINTENANCE FEE IN AN EXPIRED PATENT (37 CFR 1.378(c))

| Patent Number | Issue Date (YYYY-MM-DD) | Application Number | Filing Date (YYYY-MM-DD) | Docket Number (if applicable) |
|---|---|---|---|---|
| 6,992,661 | 2006-01-31 | 10/456,785 | 2003-06-09 | 04329.3069-00000 |

CAUTION: Maintenance fee (and surcharge, if any) payment must correctly identify: (1) the patent number and (2) the application number of the actual U.S. application leading to issuance of that patent to ensure the fee(s) is/are associated with the correct patent. 37 CFR 1.366(c) and (d).

SMALL ENTITY
☐ Patentee claims, or has previously claimed, small entity status. See 37 CFR 1.27.

LOSS OF ENTITLEMENT TO SMALL ENTITY STATUS
☐ Patentee is no longer entitled to small entity status. See 37 CFR 1.27(g)

| NOT Small Entity | | | Small Entity | | |
|---|---|---|---|---|---|
| | Fee | Code | | Fee | Code |
| ◉ | 3 ½ year | (1551) | ○ | 3 ½ year | (2551) |
| ○ | 7 ½ year | (1552) | ○ | 7 ½ year | (2552) |
| ○ | 11 ½ year | (1553) | ○ | 11 ½ year | (2553) |

SURCHARGE
The surcharge required by 37 CFR 1.20(i)(2) (Fee Code 1558) must be paid as a condition of accepting unintentionally delayed payment of the maintenance fee.

MAINTENANCE FEE (37 CFR 1.20(e)-(g))
The appropriate maintenance fee must be submitted with this petition.

STATEMENT
THE UNDERSIGNED CERTIFIES THAT THE DELAY IN PAYMENT OF THE MAINTENANCE FEE TO THIS PATENT WAS UNINTENTIONAL

PETITIONER(S) REQUEST THAT THE DELAYED PAYMENT OF THE MAINTENANCE FEE BE ACCEPTED AND THE PATENT REINSTATED

THIS PORTION MUST BE COMPLETED BY THE SIGNATORY OR SIGNATORIES

37 CFR 1.378(d) states: "Any petition under this section must be signed by an attorney or agent registered to practice before the Patent and Trademark Office, or by the patentee, the assignee, or other party in interest."

I certify, in accordance with 37 CFR 1.4(d)(4) that I am

◉ An attorney or agent registered to practice before the Patent and Trademark Office

○ A sole patentee

○ A joint patentee; I certify that I am authorized to sign this submission on behalf of all the other patentees.

○ A joint patentee; all of whom are signing this e-petition

○ The assignee of record of the entire interest

Under the Paperwork Reduction Act of 1995, no persons are required to respond to a collection of information unless it displays valid OMB control number.

| Patent Practitioner | | | |
|---|---|---|---|
| A signature of the applicant or representative is required in accordance with 37 CFR 1.33 and 10.18. Please see 37 CFR 1.4(d) for the form of the signature | | | |
| Signature | /Richard V. Burgujian/ | Date (YYYY-MM-DD) | 2011-07-25 |
| Name | Richard V. Burgujian | Registration Number | 31744 |

This collection of information is required by 37 CFR 1.378(c). The information is required to obtain or retain a benefit by the public which is to file (and by the USPTO to process) an application. Confidentiality is governed by 35 U.S.C. 122 and 37 CFR 1.11 and 1.14. This collection is estimated to take 1 hour to complete, including gathering, preparing, and submitting the completed application form to the USPTO. Time will vary depending upon the individual case. Any comments on the amount of time you require to complete this form and/ or suggestions for reducing this burden, should be sent to the Chief Information Officer, U.S. Patent and Trademark Office, U.S. Department of Commerce, P.O. Box 1450, Alexandria, VA 22313-1450. DO NOT SEND FEES OR COMPLETED FORMS TO THIS ADDRESS. **This form can only be used when in conjunction with EFS-Web. If this form is mailed to the USPTO, it may cause delays in reinstating the patent.**

# Privacy Act Statement

The Privacy Act of 1974 (P.L. 93-579) requires that you be given certain information in connection with your submission of the attached form related to a patent application or patent. Accordingly, pursuant to the requirements of the Act, please be advised that: (1) the general authority for the collection of this information is 35 U.S.C. 2(b)(2); (2) furnishing of the information solicited is voluntary; and (3) the principal purpose for which the information is used by the U.S. Patent and Trademark Office is to process and/or examine your submission related to a patent application or patent. If you do not furnish the requested information, the U.S. Patent and Trademark Office may not be able to process and/or examine your submission, which may result in termination of proceedings or abandonment of the application or expiration of the patent.

The information provided by you in this form will be subject to the following routine uses:

1. The information on this form will be treated confidentially to the extent allowed under the Freedom of Information Act (5 U.S.C. 552) and the Privacy Act (5 U.S.C. 552a). Records from this system of records may be disclosed to the Department of Justice to determine whether the Freedom of Information Act requires disclosure of these records.

2. A record from this system of records may be disclosed, as a routine use, in the course of presenting evidence to a court, magistrate, or administrative tribunal, including disclosures to opposing counsel in the course of settlement negotiations.

3. A record in this system of records may be disclosed, as a routine use, to a Member of Congress submitting a request involving an individual, to whom the record pertains, when the individual has requested assistance from the Member with respect to the subject matter of the record.

4. A record in this system of records may be disclosed, as a routine use, to a contractor of the Agency having need for the information in order to perform a contract. Recipients of information shall be required to comply with the requirements of the Privacy Act of 1974, as amended, pursuant to 5 U.S.C. 552a(m).

5. A record related to an International Application filed under the Patent Cooperation Treaty in this system of records may be disclosed, as a routine use, to the International Bureau of the World Intellectual Property Organization, pursuant to the Patent Cooperation Treaty.

6. A record in this system of records may be disclosed, as a routine use, to another federal agency for purposes of National Security review (35 U.S.C. 181) and for review pursuant to the Atomic Energy Act (42 U.S.C. 218(c)).

7. A record from this system of records may be disclosed, as a routine use, to the Administrator, General Services, or his/her designee, during an inspection of records conducted by GSA as part of that agency's responsibility to recommend improvements in records management practices and programs, under authority of 44 U.S.C. 2904 and 2906. Such disclosure shall be made in accordance with the GSA regulations governing inspection of records for this purpose, and any other relevant (i.e., GSA or Commerce) directive. Such disclosure shall not be used to make determinations about individuals.

8. A record from this system of records may be disclosed, as a routine use, to the public after either publication of the application pursuant to 35 U.S.C. 122(b) or issuance of a patent pursuant to 35 U.S.C. 151. Further, a record may be disclosed, subject to the limitations of 37 CFR 1.14, as a routine use, to the public if the record was filed in an application which became abandoned or in which the proceedings were terminated and which application is referenced by either a published application, an application open to public inspections or an issued patent.

9. A record from this system of records may be disclosed, as a routine use, to a Federal, State, or local law enforcement agency, if the USPTO becomes aware of a violation or potential violation of law or regulation.

UNITED STATES PATENT AND TRADEMARK OFFICE

Commissioner for Patents
United States Patent and Trademark Office
P.O. Box 1450
Alexandria, VA 22313-1450
www.uspto.gov

KLARQUIST SPARKMAN, LLP
121 S.W. SALMON STREET
SUITE #1600
PORTLAND OR 97204-2988

MAILED
AUG 03 2010
OFFICE OF PETITIONS

| | |
|---|---|
| In re Patent No. 7,598,077 | : DECISION ON REQUEST |
| Horikawa, et al. | : FOR |
| Issue Date: October 6, 2009 | : RECONSIDERATION OF |
| Application No. 10/456,830 | : PATENT TERM ADJUSTMENT |
| Filed: June 5, 2003 | : and |
| Atty Docket No. 4239-63008-01 | : NOTICE OF INTENT TO ISSUE |
| | : CERTIFICATE OF CORRECTION |

This is a decision on the petition filed on May 20, 2010, which is being treated as a petition under 37 CFR 1.705(d) requesting that the patent term adjustment indicated on the above-identified patent be corrected to indicate that the term of the above-identified patent is extended or adjusted by one thousand, eight hundred and eleven (1,811) days.

The petition to correct the patent term adjustment indicated on the above-identified patent to indicate that the term of the above-identified patent is extended or adjusted by one thousand, eight hundred and eleven (1,811) days is **GRANTED**.[1]

The application is being forwarded to the Certificates of Corrections Branch for issuance of a certificate of correction. The Office will issue a certificate of correction indicating that the term of the above-identified patent is extended or adjusted by **one thousand, eight hundred and eleven (1,811) days.**

[1] It is noted that the "Decision on Request for Recalculation of Patent Term Adjustment in View of Wyeth and Notice of Intent to Issue Certificate of Correction" mailed April 20, 2010, added 595 days of additional patent term adjustment. A review of the file history reveals that the April 20, 2010, decision was issued in response to a "Request for Recalculation of Patent Term Adjustment in View of Wyeth" filed January 29, 2007. The 595 days of patent term adjustment is being removed as it was entered in error as a result of duplicitous efforts by the Office to address the request filed January 20, 2010, and the petition under 37 CFR 1.705(d) filed December 3, 2009.

Telephone inquiries specific to this matter should be directed to the undersigned, at (571) 272-3222.

/Kenya A. McLaughlin/

Kenya A. McLaughlin
Petitions Attorney
Office of Petitions

Enclosure: Copy of DRAFT Certificate of Correction

**DRAFT COPY**

UNITED STATES PATENT AND TRADEMARK OFFICE

# CERTIFICATE OF CORRECTION

PATENT : 7,598,077 B2

DATED : Oct. 6, 2009

INVENTOR(S) : Horikawa et al.

It is certified that error appears in the above-identified patent and that said Letters Patent is hereby corrected as shown below:

On the cover page,

[*] Notice: Subject to any disclaimer, the term of this patent is extended or adjusted under 35 USC 154(b) by (1216) days

Delete the phrase "by 1216 days" and insert – by 1811 days--

UNITED STATES PATENT AND TRADEMARK OFFICE

Commissioner for Patents
United States Patent and Trademark Office
P.O. Box 1450
Alexandria, VA 22313-1450
www.uspto.gov

MARTIN & FERRARO, LLP
1557 LAKE O'PINES STREET, NE
HARTVILLE OH 44632

MAILED

SEP 13 2010

OFFICE OF PETITIONS

In re Application of :
Michelson :
Application No. 10/457,117 : DECISION ON PETITION
Filed: 9 June, 2003 :
Attorney Docket No. 101.0048-03000 :

This is a decision on the petition filed on 18 August, 2010, pursuant to 37 C.F.R §1.182 requesting authorization to withdraw the terminal disclaimer filed 31 March, 2003.

**NOTE:**

Petitions seeking to reopen the question of the propriety of the double patenting rejection that prompted the filing of [a] terminal disclaimer have not been favorably considered. (*See*: MPEP §1490.)

As of this writing, there has been no response from the Patent Legal Research Center in this matter.

Any substantive questions Petitioner may have **must** be directed to the Examiner

The petition pursuant to 37 C.F.R §1.182 is **DISMISSED**.

The guidance in the Commentary at MPEP §1490 provides in pertinent part:

***

**VII.WITHDRAWING A RECORDED TERMINAL DISCLAIMER**

If timely requested, a recorded terminal disclaimer may be withdrawn before the application in which it is filed issues as a patent, or in a reexamination proceeding, before the reexamination certificate issues. After a patent or reexamination certificate issues, it is unlikely that a recorded terminal disclaimer will be nullified.

> ***A. Before Issuance Of Patent***
>
> While the filing and recordation of an unnecessary terminal disclaimer has been characterized as an "unhappy circumstance" in *In re Jentoft*, 392 F.2d 633, 157 USPQ 363 (CCPA 1968), there is no statutory prohibition against nullifying or otherwise canceling the effect of a recorded terminal disclaimer which was erroneously filed before the patent issues. *>Because< the terminal disclaimer would not take effect until the patent is granted, and the public has not had the opportunity to rely on the terminal disclaimer, relief from this unhappy circumstance may be available by way of petition or by refiling the application (other than by refiling it as a CPA).
>
> Under appropriate circumstances, consistent with the orderly administration of the examination process, the nullification of a recorded terminal disclaimer may be addressed by filing a petition under 37 CFR §1.182 requesting withdrawal of the recorded terminal disclaimer. Petitions seeking to reopen the question of the propriety of the double patenting rejection that prompted the filing of the terminal disclaimer have not been favorably considered. The filing of a continuing application other than a CPA, while abandoning the application in which the terminal disclaimer has been filed, will typically nullify the effect of a terminal disclaimer. The filing of a Request for Continued Examination (RCE) of an application under 37 CFR §1.114 will not nullify the effect of a terminal disclaimer, *>because< a new application has not been filed, but rather prosecution has been continued in the existing application. (Emphasis supplied.)
>
> ***

At the request of the Office of Petitions, the Examiner is reviewing Petitioner's request.

At the request of the Office of Petitions, the Patent Legal Research Center is reviewing Petitioner's request (as to the substitution TD).

Accordingly, the petition is **dismissed without prejudice**.

This application is released to the Technology Center/AU 3733 for further processing in due course.

While telephone inquiries regarding this decision may be directed to the undersigned at (571) 272-3214, it is noted that all practice before the Office is in writing (see: 37 C.F.R. §1.2[1]) and the proper authority for action on any matter in this regard are the statutes (35 U.S.C.), regulations (37 C.F.R.) and the commentary on policy (MPEP). Therefore, no telephone discussion may be controlling or considered authority for Petitioner's/Caller's action(s).

/John J. Gillon, Jr./
John J. Gillon, Jr.
Senior Attorney
Office of Petitions

[1] The regulations at 37 C.F.R. §1.2 provide:
**§1.2 Business to be transacted in writing.**
All business with the Patent and Trademark Office should be transacted in writing.The personal attendance of applicants or their attorneys or agents at the Patent and Trademark Office is unnecessary. The action of the Patent and Trademark Office will be based exclusively on the written record in the Office. No attention will be paid to any alleged oral promise, stipulation,or understanding in relation to which there is disagreement or doubt.

UNITED STATES PATENT AND TRADEMARK OFFICE

Commissioner for Patents
United States Patent and Trademark Office
P.O. Box 1450
Alexandria, VA 22313-1450
www.uspto.gov

MARTIN & FERRARO, LLP
1557 LAKE O'PINES STREET, NE
HARTVILLE OH 44632

MAILED
JAN 18 2011
OFFICE OF PETITIONS

In re Application of :
Michelson :
Application No. 10/457,117 : DECISION ON PETITION
Filed: 9 June, 2003 :
Attorney Docket No. 101.0048-03000 :

This is a decision on the petition filed on 22 October, 2010, pursuant to 37 C.F.R §1.182 requesting authorization to withdraw the terminal disclaimer filed 31 March, 2003.

The petition pursuant to 37 C.F.R §1.182 is **GRANTED**.

Petitioner avers that:

- the terminal disclaimer (TD) of 31 March, 2003, is no longer applicable because amendments to the claims have deleted reference(s) to Patent No. 6,142,997;
- a substitute terminal disclaimer has been submitted to and accepted by the Office as to other patent references; and
- the Examiner, by Interview Summary of 8 October, 2010, has no objection to the withdrawal of the TD of 31 March, 2003.

Petitioner's averments are consistent with the record.

The guidance in the Commentary at MPEP §1490 provides in pertinent part:

***

**VII. WITHDRAWING A RECORDED TERMINAL DISCLAIMER**

If timely requested, a recorded terminal disclaimer may be withdrawn before the application in which it is filed issues as a patent, or in a reexamination proceeding, before the reexamination certificate issues. After a patent or reexamination certificate issues, it is unlikely that a recorded terminal disclaimer will be nullified.

> ***A. Before Issuance Of Patent***
>
> While the filing and recordation of an unnecessary terminal disclaimer has been characterized as an "unhappy circumstance" in *In re Jentoft*, 392 F.2d 633, 157 USPQ 363 (CCPA 1968), there is no statutory prohibition against nullifying or otherwise canceling the effect of a recorded terminal disclaimer which was erroneously filed before the patent issues. *>Because< the terminal disclaimer would not take effect until the patent is granted, and the public has not had the opportunity to rely on the terminal disclaimer, relief from this unhappy circumstance may be available by way of petition or by refiling the application (other than by refiling it as a CPA).
>
> Under appropriate circumstances, consistent with the orderly administration of the examination process, the nullification of a recorded terminal disclaimer may be addressed by filing a petition under 37 CFR §1.182 requesting withdrawal of the recorded terminal disclaimer. Petitions seeking to reopen the question of the propriety of the double patenting rejection that prompted the filing of the terminal disclaimer have not been favorably considered. The filing of a continuing application other than a CPA, while abandoning the application in which the terminal disclaimer has been filed, will typically nullify the effect of a terminal disclaimer. The filing of a Request for Continued Examination (RCE) of an application under 37 CFR §1.114 will not nullify the effect of a terminal disclaimer, *>because< a new application has not been filed, but rather prosecution has been continued in the existing application. (Emphasis supplied.)
>
> ***

It appears as of this writing that the barriers to withdrawal of the 23 February, 2010, TD have been removed.

Accordingly, the petition is **granted**.

This application is released to the Technology Center/AU 3731 for further processing in due course.

While telephone inquiries regarding this decision may be directed to the undersigned at (571) 272-3214, it is noted that all practice before the Office is in writing (see: 37 C.F.R. §1.2[1]) and the proper authority for action on any matter in this regard are the statutes (35 U.S.C.), regulations (37 C.F.R.) and the commentary on policy (MPEP). Therefore, no telephone discussion may be controlling or considered authority for Petitioner's/Caller's action(s).

/John J. Gillon, Jr./
John J. Gillon, Jr.
Senior Attorney
Office of Petitions

[1] The regulations at 37 C.F.R. §1.2 provide:
**§1.2 Business to be transacted in writing.**
All business with the Patent and Trademark Office should be transacted in writing.The personal attendance of applicants or their attorneys or agents at the Patent and Trademark Office is unnecessary. The action of the Patent and Trademark Office will be based exclusively on the written record in the Office. No attention will be paid to any alleged oral promise, stipulation,or understanding in relation to which there is disagreement or doubt.

UNITED STATES PATENT AND TRADEMARK OFFICE

Commissioner for Patents
United States Patent and Trademark Office
P.O. Box 1450
Alexandria, VA 22313-1450
www.uspto.gov

MARTIN & FERRARO, LLP
1557 LAKE O'PINES STREET, NE
HARTVILLE OH 44632

MAILED
FEB 22 2011
OFFICE OF PETITIONS

In re Application of
Michelson
Application No. 10/457,117
Filed: 9 June, 2003
Attorney Docket No. 101.0048-03000

DECISION ON PETITION

This is a decision on the petition filed on 27 January, 2011, pursuant to 37 C.F.R §1.182 requesting clarification of the authorization to withdraw the terminal disclaimer filed 20 November, 2006.

The petition pursuant to 37 C.F.R §1.182 is **GRANTED**.

Petitioner avers that:

- the terminal disclaimer (TD) of 20 November, 2006, is no longer applicable because amendments to the claims have deleted reference(s) to Patent No. 6,142,997;
- a substitute terminal disclaimer has been submitted to and accepted by the Office as to other patent references; and
- the Examiner, by Interview Summary of 8 October, 2010, has no objection to the withdrawal of the TD of 20 November.

Petitioner's averments are consistent with the record and with the guidance in the Commentary at MPEP §1490.[1]

[1] The guidance in the Commentary at MPEP §1490 provides in pertinent part:

***

**VII.WITHDRAWING A RECORDED TERMINAL DISCLAIMER**

If timely requested, a recorded terminal disclaimer may be withdrawn before the application in which it is filed issues as a patent, or in a reexamination proceeding, before the reexamination certificate issues. After a patent or reexamination certificate issues, it is unlikely that a recorded terminal disclaimer will be nullified.

***A. Before Issuance Of Patent***

It appears as of this writing that the barriers to withdrawal of the 20 November, 2006, TD have been removed.

Accordingly, the petition is **granted**.

This application is released to the Technology Center/AU 3731 for further processing in due course.

While telephone inquiries regarding this decision may be directed to the undersigned at (571) 272-3214, it is noted that all practice before the Office is in writing (see: 37 C.F.R. §1.2[2]) and the proper authority for action on any matter in this regard are the statutes (35 U.S.C.), regulations (37 C.F.R.) and the commentary on policy (MPEP). Therefore, no telephone discussion may be controlling or considered authority for Petitioner's/Caller's action(s).

/John J. Gillon, Jr./
John J. Gillon, Jr.
Senior Attorney
Office of Petitions

---

While the filing and recordation of an unnecessary terminal disclaimer has been characterized as an "unhappy circumstance" in *In re Jentoft*, 392 F.2d 633, 157 USPQ 363 (CCPA 1968), there is no statutory prohibition against nullifying or otherwise canceling the effect of a recorded terminal disclaimer which was erroneously filed before the patent issues. *>Because< the terminal disclaimer would not take effect until the patent is granted, and the public has not had the opportunity to rely on the terminal disclaimer, relief from this unhappy circumstance may be available by way of petition or by refiling the application (other than by refiling it as a CPA).

Under appropriate circumstances, consistent with the orderly administration of the examination process, the nullification of a recorded terminal disclaimer may be addressed by filing a petition under 37 CFR §1.182 requesting withdrawal of the recorded terminal disclaimer. Petitions seeking to reopen the question of the propriety of the double patenting rejection that prompted the filing of the terminal disclaimer have not been favorably considered. The filing of a continuing application other than a CPA, while abandoning the application in which the terminal disclaimer has been filed, will typically nullify the effect of a terminal disclaimer. The filing of a Request for Continued Examination (RCE) of an application under 37 CFR §1.114 will not nullify the effect of a terminal disclaimer, *>because< a new application has not been filed, but rather prosecution has been continued in the existing application. (Emphasis supplied.)

***

[2] The regulations at 37 C.F.R. §1.2 provide:

**§1.2 Business to be transacted in writing.**

All business with the Patent and Trademark Office should be transacted in writing.The personal attendance of applicants or their attorneys or agents at the Patent and Trademark Office is unnecessary. The action of the Patent and Trademark Office will be based exclusively on the written record in the Office. No attention will be paid to any alleged oral promise, stipulation,or understanding in relation to which there is disagreement or doubt.

## SPE RESPONSE FOR CERTIFICATE OF CORRECTION

**Paper No.:** _____

**DATE** : 09/02/10

**TO SPE OF** : ART UNIT 1645

**SUBJECT** : Request for Certificate of Correction for Appl. No.: 10457157 Patent No.: RE41028

Please respond to this request for a certificate of correction within 7 days.

**FOR IFW FILES:**

Please review the requested changes/corrections as shown in the **COCIN** document(s) in the IFW application image. No new matter should be introduced, nor should the scope or meaning of the claims be changed.

Please complete the response (see below) and forward the completed response to scanning using document code **COCX**.

**FOR PAPER FILES:**

Please review the requested changes/corrections as shown in the attached certificate of correction. Please complete this form (see below) and forward it with the file to:

**Certificates of Correction Branch (C of C)**
**Randolph Square 9D40-D**
**Palm Location 7580**
**You can fax the Directors/SPE response to 571-270-9990**

Lamonte Newsome
**Certificates of Correction Branch**
**703-756-1574**

**Thank You For Your Assistance**

---

**The request for issuing the above-identified correction(s) is hereby:**
Note your decision on the appropriate box.

- ☐ **Approved** — **All** changes apply.
- ☒ **Approved in Part** — Specify below which changes **do not** apply.
- ☐ **Denied** — State the reasons for denial below.

**Comments:** correction to column 5 lines 9-10 to replace "GCC" the "GCG" can not be done because the language is not present at that point the language is on lines 19-20 of column 5

LARRY R. HELMS, PH.D.
SUPERVISORY PATENT EXAMINER
**SPE**

1645
**Art Unit**

## SPE RESPONSE FOR CERTIFICATE OF CORRECTION

Paper No.: _____

DATE : 09/02/10

TO SPE OF : ART UNIT 1645

SUBJECT : Request for Certificate of Correction for Appl. No.: 10457157 Patent No.: RE41028

Please respond to this request for a certificate of correction within 7 days.

**FOR IFW FILES:**

Please review the requested changes/corrections as shown in the **COCIN** document(s) in the IFW application image. No new matter should be introduced, nor should the scope or meaning of the claims be changed.

Please complete the response (see below) and forward the completed response to scanning using document code **COCX**.

**FOR PAPER FILES:**

Please review the requested changes/corrections as shown in the attached certificate of correction. Please complete this form (see below) and forward it with the file to:

**Certificates of Correction Branch (C of C)**
**Randolph Square 9D40-D**
**Palm Location 7580**

You can fax the Directors/SPE response to 571-270-9990

Lamonte Newsome
**Certificates of Correction Branch**
**703-756-1574**

**Thank You For Your Assistance**

---

**The request for issuing the above-identified correction(s) is hereby:**
Note your decision on the appropriate box.

- ☐ **Approved** — **All** changes apply.
- ☒ **Approved in Part** — Specify below which changes **do not** apply.
- ☐ **Denied** — State the reasons for denial below.

**Comments:** correction to column 5 lines 9-10 to replace "GCC" the "GCG" can not be done because the language is not present at that point the language is on lines 19-20 of column 5

LARRY R. HELMS, PH.D.
SUPERVISORY PATENT EXAMINER
**SPE**

1645
**Art Unit**

## SPE RESPONSE FOR CERTIFICATE OF CORRECTION

**Paper No.:** _____

**DATE** : 01-01-10

**TO SPE OF** : ART UNIT 1625

**SUBJECT** : Request for Certificate of Correction for Appl. No.: 10/457256 Patent No.: 6894065
Please respond to this request for a certificate of correction within 7 days.

**FOR IFW FILES:**

Please review the requested changes/corrections as shown in the **COCIN** document(s) in the IFW application image. No new matter should be introduced, nor should the scope or meaning of the claims be changed.

Please complete the response (see below) and forward the completed response to scanning using document code **COCX**.

**FOR PAPER FILES:**

Please review the requested changes/corrections as shown in the attached certificate of correction. Please complete this form (see below) and forward it with the file to:

**Certificates of Correction Branch (CofC)**
**Randolph Square – 9D10-A**
**Palm Location 7580**

**Angela Green 703-756-1541**
**Certificates of Correction Branch**
**703-756-1814**

**Thank You For Your Assistance**

**The request for issuing the above-identified correction(s) is hereby:**
Note your decision on the appropriate box.

- ☐ **Approved** — **All** changes apply.
- ☐ **Approved in Part** — Specify below which changes **do not** apply.
- ☒ **Denied** — State the reasons for denial below.

**Comments:** Applicant has not indicated the line(s) of the claim in which the error appears and the examiner is not able to determine what corrections are requested.

/Janet L. Andres/ — **SPE**

1625 — **Art Unit**

UNITED STATES PATENT AND TRADEMARK OFFICE

Commissioner for Patents
United States Patent and Trademark Office
P.O. Box 1450
Alexandria, VA 22313-1450
www.uspto.gov

Date April 25, 2011

Patent No. :6894065
Inventor :Javier Zabata
Patent Issued :August 17, 2010
Title :HAIR DRYER DIFFUSER

Re: Request for Certificate of Correction

Consideration has been given your request for the issuance of a certificate of correction for the above-identified patent.

Accordingly, applicants' proposed request to make changes to the claims is not warranted entry. Review of the application claims for which applicant attempts to change failed to reveal documents in support of applicants request. Accordingly, the claims as presented are considered to be in accordance with the record of the Patent and Trademark Office as passed to issue by the examiner.

For further consideration, applicant should submit a request for reconsideration with the inclusion of documentation to support changes as requested by applicant as well as specific locations of errors as they appear in the printed patent using column and line reference.

In view of the forgoing, applicants' request in this matter is hereby denied. Further correspondence concerning this matter should be directed to Certificate of Corrections Branch. Any telephone inquiries concerning this communication should be directed to Ms. A. Green at (571) 272-9005.

For more detailed instructions concerning formatting and procedures for requesting corrections under 37 CFR 1.322/1.323 see MPEP 1485.

A. Green

Mary Diggs, Supervisor
Decisions & Certificates
of Correction Branch
(703) 756-1580 or (571) 272-

Heidi M. Struse,
Merck
P.O. Box 2000
Rahway, NJ 07065-0907

/arg

UNITED STATES PATENT AND TRADEMARK OFFICE

Commissioner for Patents
United States Patent and Trademark Office
P.O. Box 1450
Alexandria, VA 22313-1450
www.uspto.gov

In re Patent No. 6885154
Issue Date: April 26,2005
Application No. 10457519
Filed: June 10,2003
Attorney Docket No. P07964US00/RFH

:
:DECISION GRANTING PETITION
:UNDER 37 CFR 1.378(c)
:

This is a decision on the electronic petition, filed February 3,2011 ,under 37 CFR 1.378(c) to accept the unintentionally delayed payment of the 3.5 year maintenance fee for the above-identified patent.

The petition is **GRANTED**.

The maintenance fee is accepted, and the above-identified patent reinstated as of February 3,2011 . This decision also constitutes notice that the fee has been accepted. An electronic copy of the petition and this decision has been created as an entry in the Image File Wrapper. Nevertheless, petitioner should print and retain an independent copy.

Telephone inquiries related to this electronic decision should be directed to the Electronic Business Center at 1-866-217-9197.

PTO/SB/66 (03-09)
Approved for use through 03/31/2012. OMB 0651-0016
U.S. Patent and Trademark Office: U.S. DEPARTMENT OF COMMERCE
Under the Paperwork Reduction Act of 1995, no persons are required to respond to a collection of information unless it displays valid OMB control number.

# PETITION TO ACCEPT UNINTENTIONALLY DELAYED PAYMENT OF MAINTENANCE FEE IN AN EXPIRED PATENT (37 CFR 1.378(c))

| Patent Number | Issue Date (YYYY-MM-DD) | Application Number | Filing Date (YYYY-MM-DD) | Docket Number (if applicable) |
|---|---|---|---|---|
| 6,885,154 | 2005-04-26 | 10/457,519 | 2003-06-10 | P07964US00 |

CAUTION: Maintenance fee (and surcharge, if any) payment must correctly identify: (1) the patent number and (2) the application number of the actual U.S. application leading to issuance of that patent to ensure the fee(s) is/are associated with the correct patent. 37 CFR 1.366(c) and (d).

SMALL ENTITY
☐ Patentee claims, or has previously claimed, small entity status. See 37 CFR 1.27.

LOSS OF ENTITLEMENT TO SMALL ENTITY STATUS
☐ Patentee is no longer entitled to small entity status. See 37 CFR 1.27(g)

| NOT Small Entity | | | Small Entity | | |
|---|---|---|---|---|---|
| | Fee | Code | | Fee | Code |
| ◉ | 3 ½ year | (1551) | ◯ | 3 ½ year | (2551) |
| ◯ | 7 ½ year | (1552) | ◯ | 7 ½ year | (2552) |
| ◯ | 11 ½ year | (1553) | ◯ | 11 ½ year | (2553) |

SURCHARGE
The surcharge required by 37 CFR 1.20(i)(2) (Fee Code 1558) must be paid as a condition of accepting unintentionally delayed payment of the maintenance fee.

MAINTENANCE FEE (37 CFR 1.20(e)-(g))
The appropriate maintenance fee must be submitted with this petition.

STATEMENT
THE UNDERSIGNED CERTIFIES THAT THE DELAY IN PAYMENT OF THE MAINTENANCE FEE TO THIS PATENT WAS UNINTENTIONAL

PETITIONER(S) REQUEST THAT THE DELAYED PAYMENT OF THE MAINTENANCE FEE BE ACCEPTED AND THE PATENT REINSTATED

THIS PORTION MUST BE COMPLETED BY THE SIGNATORY OR SIGNATORIES

37 CFR 1.378(d) states: "Any petition under this section must be signed by an attorney or agent registered to practice before the Patent and Trademark Office, or by the patentee, the assignee, or other party in interest."

I certify, in accordance with 37 CFR 1.4(d)(4) that I am

◉ An attorney or agent registered to practice before the Patent and Trademark Office

◯ A sole patentee

◯ A joint patentee; I certify that I am authorized to sign this submission on behalf of all the other patentees.

◯ A joint patentee; all of whom are signing this e-petition

◯ The assignee of record of the entire interest

Under the Paperwork Reduction Act of 1995, no persons are required to respond to a collection of information unless it displays valid OMB control number.

| Patent Practitioner | | | |
|---|---|---|---|
| A signature of the applicant or representative is required in accordance with 37 CFR 1.33 and 10.18. Please see 37 CFR 1.4(d) for the form of the signature | | | |
| Signature | /Douglas E. Jackson/ | Date (YYYY-MM-DD) | 2011-02-03 |
| Name | Douglas E. Jackson | Registration Number | 28518 |

This collection of information is required by 37 CFR 1.378(c). The information is required to obtain or retain a benefit by the public which is to file (and by the USPTO to process) an application. Confidentiality is governed by 35 U.S.C. 122 and 37 CFR 1.11 and 1.14. This collection is estimated to take 1 hour to complete, including gathering, preparing, and submitting the completed application form to the USPTO. Time will vary depending upon the individual case. Any comments on the amount of time you require to complete this form and/ or suggestions for reducing this burden, should be sent to the Chief Information Officer, U.S. Patent and Trademark Office, U.S. Department of Commerce, P.O. Box 1450, Alexandria, VA 22313-1450. DO NOT SEND FEES OR COMPLETED FORMS TO THIS ADDRESS. **This form can only be used when in conjunction with EFS-Web. If this form is mailed to the USPTO, it may cause delays in reinstating the patent.**

# Privacy Act Statement

The Privacy Act of 1974 (P.L. 93-579) requires that you be given certain information in connection with your submission of the attached form related to a patent application or patent. Accordingly, pursuant to the requirements of the Act, please be advised that: (1) the general authority for the collection of this information is 35 U.S.C. 2(b)(2); (2) furnishing of the information solicited is voluntary; and (3) the principal purpose for which the information is used by the U.S. Patent and Trademark Office is to process and/or examine your submission related to a patent application or patent. If you do not furnish the requested information, the U.S. Patent and Trademark Office may not be able to process and/or examine your submission, which may result in termination of proceedings or abandonment of the application or expiration of the patent.

The information provided by you in this form will be subject to the following routine uses:

1. The information on this form will be treated confidentially to the extent allowed under the Freedom of Information Act (5 U.S.C. 552) and the Privacy Act (5 U.S.C. 552a). Records from this system of records may be disclosed to the Department of Justice to determine whether the Freedom of Information Act requires disclosure of these records.

2. A record from this system of records may be disclosed, as a routine use, in the course of presenting evidence to a court, magistrate, or administrative tribunal, including disclosures to opposing counsel in the course of settlement negotiations.

3. A record in this system of records may be disclosed, as a routine use, to a Member of Congress submitting a request involving an individual, to whom the record pertains, when the individual has requested assistance from the Member with respect to the subject matter of the record.

4. A record in this system of records may be disclosed, as a routine use, to a contractor of the Agency having need for the information in order to perform a contract. Recipients of information shall be required to comply with the requirements of the Privacy Act of 1974, as amended, pursuant to 5 U.S.C. 552a(m).

5. A record related to an International Application filed under the Patent Cooperation Treaty in this system of records may be disclosed, as a routine use, to the International Bureau of the World Intellectual Property Organization, pursuant to the Patent Cooperation Treaty.

6. A record in this system of records may be disclosed, as a routine use, to another federal agency for purposes of National Security review (35 U.S.C. 181) and for review pursuant to the Atomic Energy Act (42 U.S.C. 218(c)).

7. A record from this system of records may be disclosed, as a routine use, to the Administrator, General Services, or his/her designee, during an inspection of records conducted by GSA as part of that agency's responsibility to recommend improvements in records management practices and programs, under authority of 44 U.S.C. 2904 and 2906. Such disclosure shall be made in accordance with the GSA regulations governing inspection of records for this purpose, and any other relevant (i.e., GSA or Commerce) directive. Such disclosure shall not be used to make determinations about individuals.

8. A record from this system of records may be disclosed, as a routine use, to the public after either publication of the application pursuant to 35 U.S.C. 122(b) or issuance of a patent pursuant to 35 U.S.C. 151. Further, a record may be disclosed, subject to the limitations of 37 CFR 1.14, as a routine use, to the public if the record was filed in an application which became abandoned or in which the proceedings were terminated and which application is referenced by either a published application, an application open to public inspections or an issued patent.

9. A record from this system of records may be disclosed, as a routine use, to a Federal, State, or local law enforcement agency, if the USPTO becomes aware of a violation or potential violation of law or regulation.

UNITED STATES PATENT AND TRADEMARK OFFICE

Commissioner for Patents
United States Patent and Trademark Office
P.O. Box 1450
Alexandria, VA 22313-1450
www.uspto.gov

Virtual Law Partners LLP
555 Bryant Street
Suite 820
Palo Alto CA 94301

MAILED
MAY 05 2011
OFFICE OF PETITIONS

In re Application of :
Baker et al. :
Application No. 10/457,562 : ON PETITION
Filed: June 10, 2003 :
Attorney Docket No. 901-001-032. :
For: TRANSDERMAL DELIVERY DEVICE
DISPOSAL SYSTEM

This is a decision on the petition, filed April 12, 2011, under 37 CFR 1.137(b) to revive the above-identified application.

The petition is **GRANTED**.

The above-identified application became abandoned for failure to timely submit a proper reply within three (3) months of the mailing of the May 20, 2010 non-final Office action. No proper extensions of time being obtained under the provisions of 37 CFR 1.136(a) and no proper reply being filed, this application became abandoned on August 21, 2010. A Notice of Abandonment was mailed on March 24, 2008.

Applicants have submitted an amendment in reply to the May 20, 2010 non-final Office action, an acceptable statement of the unintentional nature of the delay in responding to the May 20, 2010 non-final Office action, and the $1,620.00 petition fee. All of the requirements under 37 CFR 1.137(b) being met, the petition is granted.

An extension of time under 37 CFR 1.136 must be filed prior to the expiration of the maximum extendable period for reply. *See* In re Application of S., 8 USPQ2d 1630, 1631 (Comm'r Pats. 1988). The $1,110.00 three month extension of time fee submitted on November 23, 2010 was submitted subsequent to the expiration of the maximum extendable period for reply. Therefore, the fee will be credited to petitioners' credit card.

After the mailing of this decision, the application will be returned to Technology Center G.A.U. 1616 for consideration of the amendment filed on April 12, 2011.

Telephone inquiries should be directed to the undersigned at (571) 272-3230.

Shirene Willis Brantley

Shirene Willis Brantley
Senior Petitions Attorney
Office of Petitions

UNITED STATES PATENT AND TRADEMARK OFFICE

COMMISSIONER FOR PATENTS
UNITED STATES PATENT AND TRADEMARK OFFICE
P.O. BOX 1450
ALEXANDRIA, VA 22313-1450
www.uspto.gov

WHITHAM, CURTIS & CHRISTOFFERSON & COOK, P.C.
11491 SUNSET HILLS ROAD
SUITE 340
RESTON VA 20190

MAILED
NOV 23 2010
OFFICE OF PETITIONS

| | | |
|---|---|---|
| In re Patent No. 6,944,033 | : | |
| Issued: 09/13/2005 | : | |
| Application No. 10/457,907 | : | NOTICE |
| Filed: 06/10/2003 | : | |
| Attorney Docket No. 1640611AA | : | |

This is a notice regarding your request for acceptance of a fee deficiency submission under 37 CFR 1.28 filed October 15, 2010.

The Office no longer investigates or rejects original or reissue patent under 37 CFR 1.56. **1098 Off. Gaz. Pat. Office 502 (January 3, 1989)**. Therefore, nothing in this Notice is intended to imply that an investigation was done.

Your fee deficiency submission under 37 CFR 1.28 is hereby **ACCEPTED**.

This patent is no longer entitled to small entity status. Accordingly, all future fees paid in this patent must be paid at the large entity rate.

Inquiries related to this communication should be directed to the undersigned at (571) 272-3211.

C. T. Donnell

Christina Tartera Donnell
Senior Petitions Attorney
Office of Petitions

UNITED STATES PATENT AND TRADEMARK OFFICE

Commissioner for Patents
United States Patent and Trademark Office
P.O. Box 1450
Alexandria, VA 22313-1450
www.uspto.gov

In re Patent No. 7055610
Issue Date: June 6,2006
Application No. 10457973
Filed: June 9,2003
Attorney Docket No. 284BOT/US92

:
:DECISION GRANTING PETITION
:UNDER 37 CFR 1.378(c)
:

This is a decision on the electronic petition, filed August 24,2010 ,under 37 CFR 1.378(c) to accept the unintentionally delayed payment of the 3.5 year maintenance fee for the above-identified patent.

The petition is **GRANTED**.

The maintenance fee is accepted, and the above-identified patent reinstated as of August 24,2010 . This decision also constitutes notice that the fee has been accepted. An electronic copy of the petition and this decision has been created as an entry in the Image File Wrapper. Nevertheless, petitioner should print and retain an independent copy.

Telephone inquiries related to this electronic decision should be directed to the Electronic Business Center at 1-866-217-9197.

PTO/SB/66 (03-09)
Approved for use through 03/31/2012. OMB 0651-0016
U.S. Patent and Trademark Office: U.S. DEPARTMENT OF COMMERCE
Under the Paperwork Reduction Act of 1995, no persons are required to respond to a collection of information unless it displays valid OMB control number.

# PETITION TO ACCEPT UNINTENTIONALLY DELAYED PAYMENT OF MAINTENANCE FEE IN AN EXPIRED PATENT (37 CFR 1.378(c))

| Patent Number | Issue Date (YYYY-MM-DD) | Application Number | Filing Date (YYYY-MM-DD) | Docket Number (if applicable) |
|---|---|---|---|---|
| 7055610 | 2006-06-06 | 10457973 | 2003-06-09 | WBI4-28402-US (BAO0690US) |

CAUTION: Maintenance fee (and surcharge, if any) payment must correctly identify: (1) the patent number and (2) the application number of the actual U.S. application leading to issuance of that patent to ensure the fee(s) is/are associated with the correct patent. 37 CFR 1.366(c) and (d).

SMALL ENTITY
☐ Patentee claims, or has previously claimed, small entity status. See 37 CFR 1.27.

LOSS OF ENTITLEMENT TO SMALL ENTITY STATUS
☐ Patentee is no longer entitled to small entity status. See 37 CFR 1.27(g)

| NOT Small Entity | | | Small Entity | | |
|---|---|---|---|---|---|
| | Fee | Code | | Fee | Code |
| ◉ | 3 ½ year | (1551) | ◯ | 3 ½ year | (2551) |
| ◯ | 7 ½ year | (1552) | ◯ | 7 ½ year | (2552) |
| ◯ | 11 ½ year | (1553) | ◯ | 11 ½ year | (2553) |

SURCHARGE
The surcharge required by 37 CFR 1.20(i)(2) (Fee Code 1558) must be paid as a condition of accepting unintentionally delayed payment of the maintenance fee.

MAINTENANCE FEE (37 CFR 1.20(e)-(g))
The appropriate maintenance fee must be submitted with this petition.

STATEMENT
THE UNDERSIGNED CERTIFIES THAT THE DELAY IN PAYMENT OF THE MAINTENANCE FEE TO THIS PATENT WAS UNINTENTIONAL

PETITIONER(S) REQUEST THAT THE DELAYED PAYMENT OF THE MAINTENANCE FEE BE ACCEPTED AND THE PATENT REINSTATED

THIS PORTION MUST BE COMPLETED BY THE SIGNATORY OR SIGNATORIES

37 CFR 1.378(d) states: "Any petition under this section must be signed by an attorney or agent registered to practice before the Patent and Trademark Office, or by the patentee, the assignee, or other party in interest."

I certify, in accordance with 37 CFR 1.4(d)(4) that I am

◉ An attorney or agent registered to practice before the Patent and Trademark Office

◯ A sole patentee

◯ A joint patentee; I certify that I am authorized to sign this submission on behalf of all the other patentees.

◯ A joint patentee; all of whom are signing this e-petition

◯ The assignee of record of the entire interest

Under the Paperwork Reduction Act of 1995, no persons are required to respond to a collection of information unless it displays valid OMB control number.

| Patent Practitioner | | | |
|---|---|---|---|
| A signature of the applicant or representative is required in accordance with 37 CFR 1.33 and 10.18. Please see 37 CFR 1.4(d) for the form of the signature | | | |
| Signature | /Keith J. Murphy/ | Date (YYYY-MM-DD) | 2010-08-24 |
| Name | Keith J. Murphy | Registration Number | 33979 |

This collection of information is required by 37 CFR 1.378(c). The information is required to obtain or retain a benefit by the public which is to file (and by the USPTO to process) an application. Confidentiality is governed by 35 U.S.C. 122 and 37 CFR 1.11 and 1.14. This collection is estimated to take 1 hour to complete, including gathering, preparing, and submitting the completed application form to the USPTO. Time will vary depending upon the individual case. Any comments on the amount of time you require to complete this form and/ or suggestions for reducing this burden, should be sent to the Chief Information Officer, U.S. Patent and Trademark Office, U.S. Department of Commerce, P.O. Box 1450, Alexandria, VA 22313-1450. DO NOT SEND FEES OR COMPLETED FORMS TO THIS ADDRESS. **This form can only be used when in conjunction with EFS-Web. If this form is mailed to the USPTO, it may cause delays in reinstating the patent.**

# Privacy Act Statement

The Privacy Act of 1974 (P.L. 93-579) requires that you be given certain information in connection with your submission of the attached form related to a patent application or patent. Accordingly, pursuant to the requirements of the Act, please be advised that: (1) the general authority for the collection of this information is 35 U.S.C. 2(b)(2); (2) furnishing of the information solicited is voluntary; and (3) the principal purpose for which the information is used by the U.S. Patent and Trademark Office is to process and/or examine your submission related to a patent application or patent. If you do not furnish the requested information, the U.S. Patent and Trademark Office may not be able to process and/or examine your submission, which may result in termination of proceedings or abandonment of the application or expiration of the patent.

The information provided by you in this form will be subject to the following routine uses:

1. The information on this form will be treated confidentially to the extent allowed under the Freedom of Information Act (5 U.S.C. 552) and the Privacy Act (5 U.S.C. 552a). Records from this system of records may be disclosed to the Department of Justice to determine whether the Freedom of Information Act requires disclosure of these records.

2. A record from this system of records may be disclosed, as a routine use, in the course of presenting evidence to a court, magistrate, or administrative tribunal, including disclosures to opposing counsel in the course of settlement negotiations.

3. A record in this system of records may be disclosed, as a routine use, to a Member of Congress submitting a request involving an individual, to whom the record pertains, when the individual has requested assistance from the Member with respect to the subject matter of the record.

4. A record in this system of records may be disclosed, as a routine use, to a contractor of the Agency having need for the information in order to perform a contract. Recipients of information shall be required to comply with the requirements of the Privacy Act of 1974, as amended, pursuant to 5 U.S.C. 552a(m).

5. A record related to an International Application filed under the Patent Cooperation Treaty in this system of records may be disclosed, as a routine use, to the International Bureau of the World Intellectual Property Organization, pursuant to the Patent Cooperation Treaty.

6. A record in this system of records may be disclosed, as a routine use, to another federal agency for purposes of National Security review (35 U.S.C. 181) and for review pursuant to the Atomic Energy Act (42 U.S.C. 218(c)).

7. A record from this system of records may be disclosed, as a routine use, to the Administrator, General Services, or his/her designee, during an inspection of records conducted by GSA as part of that agency's responsibility to recommend improvements in records management practices and programs, under authority of 44 U.S.C. 2904 and 2906. Such disclosure shall be made in accordance with the GSA regulations governing inspection of records for this purpose, and any other relevant (i.e., GSA or Commerce) directive. Such disclosure shall not be used to make determinations about individuals.

8. A record from this system of records may be disclosed, as a routine use, to the public after either publication of the application pursuant to 35 U.S.C. 122(b) or issuance of a patent pursuant to 35 U.S.C. 151. Further, a record may be disclosed, subject to the limitations of 37 CFR 1.14, as a routine use, to the public if the record was filed in an application which became abandoned or in which the proceedings were terminated and which application is referenced by either a published application, an application open to public inspections or an issued patent.

9. A record from this system of records may be disclosed, as a routine use, to a Federal, State, or local law enforcement agency, if the USPTO becomes aware of a violation or potential violation of law or regulation.

UNITED STATES PATENT AND TRADEMARK OFFICE

Commissioner for Patents
United States Patent and Trademark Office
P.O. Box 1450
Alexandria, VA 22313-1450
www.uspto.gov

In re Patent No. 6956710
Issue Date: October 18,2005
Application No. 10458666
Filed: June 9,2003
Attorney Docket No. 155634-0138

:
:DECISION GRANTING PETITION
:UNDER 37 CFR 1.378(c)
:

This is a decision on the electronic petition, filed September 30,2010 ,under 37 CFR 1.378(c) to accept the unintentionally delayed payment of the 3.5 year maintenance fee for the above-identified patent.

The petition is **GRANTED**.

The maintenance fee is accepted, and the above-identified patent reinstated as of September 30,2010 . This decision also constitutes notice that the fee has been accepted. An electronic copy of the petition and this decision has been created as an entry in the Image File Wrapper. Nevertheless, petitioner should print and retain an independent copy.

Telephone inquiries related to this electronic decision should be directed to the Electronic Business Center at 1-866-217-9197.

PTO/SB/66 (03-09)
Approved for use through 03/31/2012. OMB 0651-0016
U.S. Patent and Trademark Office: U.S. DEPARTMENT OF COMMERCE
Under the Paperwork Reduction Act of 1995, no persons are required to respond to a collection of information unless it displays valid OMB control number.

# PETITION TO ACCEPT UNINTENTIONALLY DELAYED PAYMENT OF MAINTENANCE FEE IN AN EXPIRED PATENT (37 CFR 1.378(c))

| Patent Number | Issue Date (YYYY-MM-DD) | Application Number | Filing Date (YYYY-MM-DD) | Docket Number (if applicable) |
|---|---|---|---|---|
| 6956710 | 2005-10-18 | 10458666 | 2003-06-09 | 0655-Misc |

CAUTION: Maintenance fee (and surcharge, if any) payment must correctly identify: (1) the patent number and (2) the application number of the actual U.S. application leading to issuance of that patent to ensure the fee(s) is/are associated with the correct patent. 37 CFR 1.366(c) and (d).

SMALL ENTITY
☐ Patentee claims, or has previously claimed, small entity status. See 37 CFR 1.27.

LOSS OF ENTITLEMENT TO SMALL ENTITY STATUS
☐ Patentee is no longer entitled to small entity status. See 37 CFR 1.27(g)

| NOT Small Entity | | Small Entity | |
|---|---|---|---|
| Fee | Code | Fee | Code |
| ◉ 3 ½ year | (1551) | ◯ 3 ½ year | (2551) |
| ◯ 7 ½ year | (1552) | ◯ 7 ½ year | (2552) |
| ◯ 11 ½ year | (1553) | ◯ 11 ½ year | (2553) |

SURCHARGE
The surcharge required by 37 CFR 1.20(i)(2) (Fee Code 1558) must be paid as a condition of accepting unintentionally delayed payment of the maintenance fee.

MAINTENANCE FEE (37 CFR 1.20(e)-(g))
The appropriate maintenance fee must be submitted with this petition.

STATEMENT
THE UNDERSIGNED CERTIFIES THAT THE DELAY IN PAYMENT OF THE MAINTENANCE FEE TO THIS PATENT WAS UNINTENTIONAL

PETITIONER(S) REQUEST THAT THE DELAYED PAYMENT OF THE MAINTENANCE FEE BE ACCEPTED AND THE PATENT REINSTATED

THIS PORTION MUST BE COMPLETED BY THE SIGNATORY OR SIGNATORIES

37 CFR 1.378(d) states: "Any petition under this section must be signed by an attorney or agent registered to practice before the Patent and Trademark Office, or by the patentee, the assignee, or other party in interest."

I certify, in accordance with 37 CFR 1.4(d)(4) that I am

◉ An attorney or agent registered to practice before the Patent and Trademark Office

◯ A sole patentee

◯ A joint patentee; I certify that I am authorized to sign this submission on behalf of all the other patentees.

◯ A joint patentee; all of whom are signing this e-petition

◯ The assignee of record of the entire interest

Under the Paperwork Reduction Act of 1995, no persons are required to respond to a collection of information unless it displays valid OMB control number.

| Patent Practitioner | | | |
|---|---|---|---|
| A signature of the applicant or representative is required in accordance with 37 CFR 1.33 and 10.18. Please see 37 CFR 1.4(d) for the form of the signature | | | |
| Signature | /Benoit Castel/ | Date (YYYY-MM-DD) | 2010-09-30 |
| Name | Benoit Castel | Registration Number | 35041 |

This collection of information is required by 37 CFR 1.378(c). The information is required to obtain or retain a benefit by the public which is to file (and by the USPTO to process) an application. Confidentiality is governed by 35 U.S.C. 122 and 37 CFR 1.11 and 1.14. This collection is estimated to take 1 hour to complete, including gathering, preparing, and submitting the completed application form to the USPTO. Time will vary depending upon the individual case. Any comments on the amount of time you require to complete this form and/ or suggestions for reducing this burden, should be sent to the Chief Information Officer, U.S. Patent and Trademark Office, U.S. Department of Commerce, P.O. Box 1450, Alexandria, VA 22313-1450. DO NOT SEND FEES OR COMPLETED FORMS TO THIS ADDRESS. **This form can only be used when in conjunction with EFS-Web. If this form is mailed to the USPTO, it may cause delays in reinstating the patent.**

# Privacy Act Statement

The Privacy Act of 1974 (P.L. 93-579) requires that you be given certain information in connection with your submission of the attached form related to a patent application or patent. Accordingly, pursuant to the requirements of the Act, please be advised that: (1) the general authority for the collection of this information is 35 U.S.C. 2(b)(2); (2) furnishing of the information solicited is voluntary; and (3) the principal purpose for which the information is used by the U.S. Patent and Trademark Office is to process and/or examine your submission related to a patent application or patent. If you do not furnish the requested information, the U.S. Patent and Trademark Office may not be able to process and/or examine your submission, which may result in termination of proceedings or abandonment of the application or expiration of the patent.

The information provided by you in this form will be subject to the following routine uses:

1. The information on this form will be treated confidentially to the extent allowed under the Freedom of Information Act (5 U.S.C. 552) and the Privacy Act (5 U.S.C. 552a). Records from this system of records may be disclosed to the Department of Justice to determine whether the Freedom of Information Act requires disclosure of these records.

2. A record from this system of records may be disclosed, as a routine use, in the course of presenting evidence to a court, magistrate, or administrative tribunal, including disclosures to opposing counsel in the course of settlement negotiations.

3. A record in this system of records may be disclosed, as a routine use, to a Member of Congress submitting a request involving an individual, to whom the record pertains, when the individual has requested assistance from the Member with respect to the subject matter of the record.

4. A record in this system of records may be disclosed, as a routine use, to a contractor of the Agency having need for the information in order to perform a contract. Recipients of information shall be required to comply with the requirements of the Privacy Act of 1974, as amended, pursuant to 5 U.S.C. 552a(m).

5. A record related to an International Application filed under the Patent Cooperation Treaty in this system of records may be disclosed, as a routine use, to the International Bureau of the World Intellectual Property Organization, pursuant to the Patent Cooperation Treaty.

6. A record in this system of records may be disclosed, as a routine use, to another federal agency for purposes of National Security review (35 U.S.C. 181) and for review pursuant to the Atomic Energy Act (42 U.S.C. 218(c)).

7. A record from this system of records may be disclosed, as a routine use, to the Administrator, General Services, or his/her designee, during an inspection of records conducted by GSA as part of that agency's responsibility to recommend improvements in records management practices and programs, under authority of 44 U.S.C. 2904 and 2906. Such disclosure shall be made in accordance with the GSA regulations governing inspection of records for this purpose, and any other relevant (i.e., GSA or Commerce) directive. Such disclosure shall not be used to make determinations about individuals.

8. A record from this system of records may be disclosed, as a routine use, to the public after either publication of the application pursuant to 35 U.S.C. 122(b) or issuance of a patent pursuant to 35 U.S.C. 151. Further, a record may be disclosed, subject to the limitations of 37 CFR 1.14, as a routine use, to the public if the record was filed in an application which became abandoned or in which the proceedings were terminated and which application is referenced by either a published application, an application open to public inspections or an issued patent.

9. A record from this system of records may be disclosed, as a routine use, to a Federal, State, or local law enforcement agency, if the USPTO becomes aware of a violation or potential violation of law or regulation.

UNITED STATES PATENT AND TRADEMARK OFFICE

Commissioner for Patents
United States Patent and Trademark Office
P.O. Box 1450

MAILED

APR 05 2011

OFFICE OF PETITIONS

**Elizabeth L. Bartlett**
**36 Belted Kingfisher Lane**
**Richmond Hill, Georgia 31324**

| | | |
|---|---|---|
| In re Patent No.: 6,926,145 | : | |
| Issue Date: August 9, 2005 | : | ON PETITION |
| Application No. 10/458,710 | : | |
| Filed: June 10, 2003 | : | |

This is in response to the petition under 37 CFR 1.137(b), filed March 24, 2010, which is being treated as a petition under 37 CFR 1.378(c) to accept the unintentionally delayed payment of a maintenance fee for the above-identified patent.

The petition is **DISMISSED.**

Any request for reconsideration of this decision should be filed within two (2) months from the mail date of this decision. The request for reconsideration should include a cover letter and be entitled as a "Renewed Petition under 37 CFR 1.378(c) to Accept Unintentionally Delayed Payment of a Maintenance Fee."

The patent expired on August 10, 2009 for failure to pay the 3 1/2 –year maintenance fee. Since this petition was submitted within twenty-four months after the six month grace period provided in 37 CFR 1.362(e), the petition was timely filed under the provisions of 37 CFR 1.378(c).

A grantable petition under 37 CFR 1.378(c) requires: (1) the required maintenance fee, (2) the surcharge, and (3) a statement that the delay in payment of the maintenance fee was unintentional. The present petition lacks item (3).

Regarding item (3), 37 CFR 1.378(c) requires a statement that the delay in payment of the maintenance fee to the patent was unintentional. Whereas the present petition possesses a statement of unintentional delay, it fails to specify the delay for payment of the maintenance fee was unintentionally delayed.

A form for filing a petition to accept unintentionally delayed payment of maintenance fee in an expired patent (37 CFR 1.378(c)) accompanies this decision for petitioner's convenience.

Petitioner may wish to consider hiring a registered patent attorney or agent to assist in the prosecution of this application. Additionally, petitioner is encouraged to contact the Inventors Assistance Center (IAC) by telephone at 800-786-9199 or 571-272-1000, Monday through Friday from 8:30AM to 5:30PM (EST). The IAC provides patent information and services to the public and is staffed by former Supervisory Patent Examiners and experience Primary Examiners who answer general questions concerning patent examining policy and procedure.

Further correspondence with respect to this matter should be addressed as follows:

By Mail: Mail Stop Petition
Commissioner for Patents
P.O. Box 1450
Alexandria, Virginia 22313-1450

By FAX: (571) 273-8300
Attn: Office of Petitions

By hand: Customer Service Window
Randolph Building
401 Dulany Street
Alexandria, Virginia 22314

Telephone inquiries related to this decision may be directed to Robert DeWitty at (571) 272-8427.

David Bucci
Petitions Examiner
Office of Petitions

UNITED STATES PATENT AND TRADEMARK OFFICE

Commissioner for Patents
United States Patent and Trademark Office
P.O. Box 1450

MAILED
JUL 21 2011
OFFICE OF PETITIONS

**Elizabeth L. Bartlett**
**36 Belted Kingfisher Lane**
**Richmond Hill, Georgia 31324**

In re Patent No.: 6,926,145 :
Issue Date: August 9, 2005 : ON PETITION
Application No. 10/458,710 :
Filed: June 10, 2003 :
Patentee: Elizabeth L. Bartlett

**REQUIREMENT FOR ADDITIONAL INFORMATION AND/OR FEE(S) DUE**

A renewed petition under 37 CFR 1.378(c) was filed on April 19, 2011, to accept the delayed payment of a maintenance fee for the above-identified patent. The petition was not accompanied with the $400.00 petition fee required in accordance with 37 CFR 1.17(f). Accordingly, no consideration on the merits can be given that petition until the required fee is received.

A decision on this petition will be held in abeyance for a period of TWO MONTHS from the date of this communication to permit petitioner to submit the $400.00 petition fee. No extension of this two-month time limit can be granted under 37 CFR 1.136(a) or (b).

**The response should include a cover letter entitled "Response to Requirement for Additional Information and/or Fee(S) Due."**

At the end of the two-month period specified above, a decision will be rendered on the renewed petition under 37 CFR 1.378, including any supplemental information submitted in response to this Requirement for Additional Information. **Thereafter, no further reconsideration or review of this matter will be undertaken.**

Further correspondence with respect to this matter should be addressed as follows:

By Mail: Mail Stop PETITION
Commissioner for Patents
P. O. Box 1450
Alexandria, VA 22313-1450

By hand: U. S. Patent and Trademark Office

Customer Service Window, Mail Stop Petitions
Randolph Building
401 Dulany Street
Alexandria, VA 22314

The centralized facsimile number is **(571) 273-8300.**

Telephone inquiries relating to this decision should be directed to Robert DeWitty (571-272-8427).

Ramesh Krishnamurthy

for Anthony Knight
Director
Office of Petitions

UNITED STATES PATENT AND TRADEMARK OFFICE

Commissioner for Patents
United States Patent and Trademark Office
P.O. Box 1450
Alexandria, VA 22313-1450
www.uspto.gov

Benita J. Rohm
ROHM & MONSANTO, P.L.C.
660 Woodward Ave., Suite 1525
Detroit MI 48228

MAILED

FEB 01 2011

OFFICE OF PETITIONS

In re Application of :
Gibbs :
Application No. 10/459,122 : DECISION ON PETITION
Filed: June 10, 2003 :
Attorney Docket No. RM.WS7A :

This is a decision on the petition, filed June 14, 2005, which is being treated as a petition under 37 CFR 1.181 (no fee) requesting withdrawal of the holding of abandonment in the above-identified application.

The petition is **GRANTED**.

This application was held abandoned for failure to reply to the restriction requirement, mailed July 19, 2004, which set a one month/ 30 day period for reply. A Notice of Abandonment was mailed on April 5, 2005.

Petitioner asserts that the Office action dated July 19, 2004 was not received.

A review of the written record indicates no irregularity in the mailing of the Office action, and, in the absence of any irregularity, there is a strong presumption that the Office action was properly mailed to the practitioner at the address of record. This presumption may be overcome by a showing that the Office action was not in fact received.

The showing required to establish non-receipt of an Office communication must include:

(1) a statement from the practitioner describing the system used for recording an Office action received at the correspondence address of record with the USPTO. The statement should establish that the docketing system is sufficiently reliable. It is expected that the record would include, but not be limited to, the application number, attorney docket number, the mail date of the Office action and the due date for the response.

(2) Practitioner must state that the Office action was not received at the correspondence address of record, and that a search of the practitioner's record(s), including any file jacket or the equivalent, and the application contents, indicates that the Office action was not received.

(3) A copy of the record(s) used by the practitioner where the non-received Office action would have been entered had it been received is required. A copy of the practitioner's record(s) required to show non-receipt of the Office action should include the master docket for the firm. That is, if a three month period for reply was set in the non-received Office action, a copy of the master docket report showing all replies docketed for a date three months from the mail date of the non-received Office action must be submitted as documentary proof of non-receipt of the Office action. If no such master docket exists, the practitioner should so state and provide other evidence such as, but not limited to, the following: the application file jacket; incoming mail log; calendar; reminder system; or the individual docket record for the application in question. See MPEP §711.03(c)(I)(A).

The petition satisfies the above-stated requirements. Accordingly, the application was not abandoned in fact.

In view of the above, the Notice of Abandonment is hereby vacated and the holding of abandonment withdrawn.

The file does not indicate a change of address has been submitted, although the address given on the petition differs from the address of record. If appropriate, a change of address should be filed in accordance with MPEP 601.03. A courtesy copy of this decision is being mailed to the address given on the petition; however, the Office will mail all future correspondence solely to the address of record.

This application is being referred to the Technology Center technical support staff of Art Unit 1626 for re-mailing the Office action of July 19, 2004. The period for reply will run from the mailing date of the Office action.

Telephone inquiries pertaining to this patent may be directed to the undersigned at (571) 272-3230.

Shirene Willis Brantley

Shirene Willis Brantley
Senior Petitions Attorney
Office of Petitions

CC: BENITA J. ROHM
ROHM & MONSANTO, PLC
12 RATHBONE PLACE
GROSSE POINTE, MI 48230

UNITED STATES PATENT AND TRADEMARK OFFICE

UNITED STATES DEPARTMENT OF COMMERCE
United States Patent and Trademark Office
Address: COMMISSIONER FOR PATENTS
P.O. Box 1450
Alexandria, Virginia 22313-1450
www.uspto.gov

YOUNG & THOMPSON
209 Madison Street
Suite 500
Alexandria, VA 22314

Mail Date: 08/03/2010

| | | |
|---|---|---|
| **Applicant** | : Akio Tanaka | : DECISION ON REQUEST FOR |
| **Patent Number** | : 7642620 | : RECALCULATION of PATENT |
| **Issue Date** | : 01/05/2010 | : TERM ADJUSTMENT IN VIEW |
| **Application No** | : 10/459,524 | : OF WYETH AND NOTICE OF INTENT TO |
| **Filed** | : 06/12/2003 | : ISSUE CERTIFICATE OF CORRECTION |
| | | : |

The Request for Recalculation is **GRANTED** to the extent indicated.

The patent term adjustment has been determined to be **1972** days. The USPTO will *sua sponte* issue a certificate of correction reflecting the amount of PTA days determined by the recalculation.

Prior to the issuance of the certificate of correction, the USPTO will afford patentee an opportunity to be heard and request reconsideration. Accordingly, patentee has **one month or thirty (30) days**, whichever is longer, to file a request for reconsideration of this patent term adjustment calculation. See 35 U.S.C. 154(b)(3)(B)(ii) and 37 CFR 1.322(a)(4). No extensions of time will be granted under 37 CFR 1.136.

Patentee should use document code PET.OP if electronically filing a request for reconsideration of this patent term adjustment calculation. The patentee must also include the information required by 37 CFR 1.705(b)(2) and the fee required by 37 CFR 1.18(e). If patentee does not file a timely request for reconsideration of this patent term adjustment calculation including the information required by 37 CFR 1.705(b)(2) and the fee required by 37 CFR 1.18(e), the USPTO will issue a certificate of correction reflecting the PTA determination noted above.

Patentee should be aware that in order to preserve the right to review in the United States District Court for the District of Columbia of the USPTO patent term adjustment determination, patentee must ensure that he or she also take the steps required under 35 U.S.C. 154(b)(4)(A) in a timely manner. Nothing in the request for recalculation should be construed as providing an alternative time frame for commencing a civil action under 35 U.S.C. 154(b)(4)(A).

Any questions concerning this decision should be directed to the Office of Patent Legal Administration at 571-272-7702.

## SPE RESPONSE FOR CERTIFICATE OF CORRECTION

**Paper No.:** _____

**DATE** : 09/02/10

**TO SPE OF** : ART UNIT 1623

**SUBJECT** : Request for Certificate of Correction for Appl. No.: 10459539 Patent No.: 7763587

Please respond to this request for a certificate of correction within 7 days.

**FOR IFW FILES:**

Please review the requested changes/corrections as shown in the **COCIN** document(s) in the IFW application image. No new matter should be introduced, nor should the scope or meaning of the claims be changed.

Please complete the response (see below) and forward the completed response to scanning using document code **COCX**.

**FOR PAPER FILES:**

Please review the requested changes/corrections as shown in the attached certificate of correction. Please complete this form (see below) and forward it with the file to:

**Certificates of Correction Branch (C of C)**
**Randolph Square 9D40-D**
**Palm Location 7580**

**You can fax the Directors/SPE response to 571-270-9990**

Lamonte Newsome
**Certificates of Correction Branch**
**703-756-1574**

**Thank You For Your Assistance**

---

**The request for issuing the above-identified correction(s) is hereby:**
Note your decision on the appropriate box.

xx☒ **Approved** — All changes apply.

☐ **Approved in Part** — Specify below which changes **do not** apply.

☐ **Denied** — State the reasons for denial below.

**Comments:** The C of C has been approved.

S. A. Jiang — **SPE**

1623 — **Art Unit**

## SPE RESPONSE FOR CERTIFICATE OF CORRECTION

**Paper No.:** _____

**DATE** : 09/02/10

**TO SPE OF** : ART UNIT 1623

**SUBJECT** : Request for Certificate of Correction for Appl. No.: 10459539 Patent No.: 7763587

Please respond to this request for a certificate of correction within 7 days.

**FOR IFW FILES:**

Please review the requested changes/corrections as shown in the **COCIN** document(s) in the IFW application image. No new matter should be introduced, nor should the scope or meaning of the claims be changed.

Please complete the response (see below) and forward the completed response to scanning using document code **COCX**.

**FOR PAPER FILES:**

Please review the requested changes/corrections as shown in the attached certificate of correction. Please complete this form (see below) and forward it with the file to:

**Certificates of Correction Branch (C of C)**
**Randolph Square 9D40-D**
**Palm Location 7580**

**You can fax the Directors/SPE response to 571-270-9990**

*Lamonte Newsome*
**Certificates of Correction Branch**
**703-756-1574**

**Thank You For Your Assistance**

---

**The request for issuing the above-identified correction(s) is hereby:**
Note your decision on the appropriate box.

XX☒ **Approved** — **All** changes apply.

☐ **Approved in Part** — Specify below which changes **do not** apply.

☐ **Denied** — State the reasons for denial below.

**Comments:** The C of C has been approved.

S. A. Jiang — **SPE**

1623 — **Art Unit**

## SPE RESPONSE FOR CERTIFICATE OF CORRECTION

UNITED STATES PATENT AND TRADEMARK OFFICE

COMMISSIONER FOR PATENTS
UNITED STATES PATENT AND TRADEMARK OFFICE
P.O. BOX 1450
ALEXANDRIA, VA 22313-1450
www.uspto.gov

Paper No.

FITCH EVEN TABIN & FLANNERY
120 SOUTH LASALLE STREET
SUITE 1600
CHICAGO IL 60603-3406

MAILED
APR 25 2011
OFFICE OF PETITIONS

| | | |
|---|---|---|
| In re Application of | : | |
| Gatto | : | DECISION ON REQUEST |
| Application No. 10/459,540 | : | FOR RECONSIDERATION OF |
| Patent No. 7,665,656 | : | PATENT TERM ADJUSTMENT |
| Filed: June 12, 2003 | : | and |
| Issued: February 23, 2010 | : | NOTICE OF INTENT TO ISSUE |
| Atty Docket No.: 94514 | : | CERTIFICATE OF CORRECTION |
| Title: ELECTRONIC FUND | : | |
| TRANSFER OR TRANSACTION | : | |
| SYSTEM | : | |

This is a decision on the "REQUEST FOR RECONSIDERATION OF PATENT TERM ADJUSTMENT," filed June 16, 2010. This submission is being treated as a petition pursuant to 37 C.F.R. § 1.705(d). Patentee requests that the patent term adjustment be increased from eight hundred and fifty-two (852) days to one thousand, three hundred and sixty-three (1363) days.

The petition to correct the patent term adjustment indicated on the above-identified patent to indicate that the term of the above-identified patent is extended or adjusted by one thousand, three hundred and sixty-three (1363) days is **GRANTED.**

Application No. 10/459,540 matured into U.S. patent No. 7,665,656 on February 23, 2010, with a patent term adjustment of 1706 days. On February 24, 2010, Patentee filed a Request for Recalculation of Patent Term Adjustment in view of Wyeth. On April 21, 2010, the Office mailed a "DECISION ON REQUEST FOR RECALCULATION of PATENT TERM ADJUSTMENT IN VIEW OF WYETH AND NOTICE OF INTENT TO ISSUE CERTIFICATE OF CORRECTION," indicating that the patent term adjustment had been determined to be 818 days. On May 18, 2010, the Office mailed a "NOTICE CONCERNING IMPROPER CALCULATION OF PATENT TERM ADJUSTMENT BASED UPON USPTO IMPROPERLY MEASURING REDUCTION PERIOD UNDER 37 CFR

1.704(c)(10)," indicating that the patent term adjustment had been determined to be 852 days.

Patentee has indicated that this patent is subject to a terminal disclaimer.[1]

The calculations of record have been reviewed and it has been determined that the correct patent term adjustment is one thousand, three hundred and sixty-three (1363) days. As discussed below, the patent term adjustment includes 512 days of "C delay," 850 days of "A delay," and 168 days of "B delay," considering 672 days of overlap (minus 167 days of undisputed applicant delay).

**C Delay (37 C.F.R. § 1.703(c)(1))**

The "C Delay" is 512 days. An interference was declared on March 30, 2006[2] and re-declared on February 9, 2007. The interference proceedings were terminated via the mailing of a decision of the Board of Patent Appeals and Interferences on August 23, 2007. The period from the date of declaration until the date on which the interference proceedings were terminated consists of 512 days.[3]

**A Delay (37 C.F.R. § 1.703(a)(2))**

The "A Delay" is 850 days. Applicant filed a response to a non-final Office action on August 16, 2005. The Office did not take action in response until the mailing of a Notice of Allowance on September 8, 2009, four months and 1,362 days later. See 37 C.F.R. § 1.703(a)(2). However, this period overlaps with the entire aforementioned period of "C Delay." As such, this period

---

[1] Petition, page 5.

[2] The PALM calculations of record (and of this decision) are based on the interference being declared on March 30, 2006. The declaration of interference is not present in the electronic record. However, the undersigned having telephonically discussed this issue with the attorney of record notes that the attorney does not dispute that the interference was declared on March 30, 2006.

[3] It is noted that Office calculations show this period as 511, not 512 days. This is erroneous, as the Office failed to take into account the fact that the date on which the interference was declared is included in the calculation.

of adjustment due to examination delay equals 1362 minus 512, or 850[4] days.

**B Delay (37 C.F.R. 1.703(b))**

The "B Delay" is 168 days. This application matured into a patent on February 23, 2010, three years and 1352 days after June 12, 2003, the actual filing date under 35 U.S.C. 111(a). Pursuant to 37 C.F.R. § 1.703(b)(2)(i), the 512 days consumed by interference proceedings is excluded from the "B" delay. Further, the Office has determined that 673 days otherwise overlap and thus, are not included in the "B" delay.

It follows that the over-three year period is 168 days (1352 - 512 - 672), not 841 days as indicated in the Office calculations.

**Conclusion**

In view thereof, the correct patent term adjustment is 1,363 days (512 + 850 + 168 days - 167 days of undisputed applicant delay)[5].

The Office will *sua sponte* issue a certificate of correction. Pursuant to 37 CFR 1.322, the Office will not issue a certificate of correction without first providing assignee or Patentee an opportunity to be heard. Accordingly, Patentee is given **one (1) month or thirty (30) days**, whichever is longer, from the mail date of this decision to respond. No extensions of time will be granted under § 1.136.

This patent is being forwarded to the Certificates of Correction Branch for issuance of a certificate of correction. The Office will issue a certificate of correction indicating that the term of the above-identified patent is extended or adjusted by **one thousand three hundred and sixty-three (1,363) days.**

---

[4] It is noted that Office calculations show this period as 851, not 850 days. This is erroneous, and is a mathematical error which carries over from the above footnote (1362 - 511 = 851, whereas 1362 - 512 = 850).

[5] It is further noted that, in this particular instance, the calculation of patent term adjustment would be the same using either the March 30, 2006 date of declaration or the February 9, 2007 re-declared date. Using the February 9th date, the C Delay = 196 days, A = 1166 days, and B = 168 days - 167 days of applicant delay.

The $200.00 fee set forth in 37 C.F.R. § 1.18(e) will be charged to Deposit Account No. 06-1135 in due course. No additional fees are required.

Telephone inquiries specific to this matter should be directed to the undersigned at (571) 272-3225.

/Paul Shanoski/
Paul Shanoski
Senior Attorney
Office of Petitions

Enclosure: Copy of DRAFT Certificate of Correction

UNITED STATES PATENT AND TRADEMARK OFFICE

# CERTIFICATE OF CORRECTION

PATENT : 7,665,656 B2

DATED : **February 23, 2010** **DRAFT**

INVENTOR(S) : Gatto et al.

It is certified that error appears in the above-identified patent and that said Letters Patent is hereby corrected as shown below:

On the cover page,

[*] Notice: Subject to any disclaimer, the term of this patent is extended or adjusted under 35 USC 154(b) by 852 days

Delete the phrase "by 852 days" and insert – by 1,363 days--

UNITED STATES PATENT AND TRADEMARK OFFICE

Commissioner for Patents
United States Patent and Trademark Office
P.O. Box 1450
Alexandria, VA 22313-1450
www.uspto.gov

CUMMINS-ALLISON CORP.
C/O NIXON PEABODY LLP
300 S. RIVERSIDE PLAZA
16TH FLOOR
CHICAGO IL 60606

**MAILED**

SEP 29 2010

OFFICE OF PETITIONS

In re Patent No. 7,600,626
Issued: October 13, 2009
Application No. 10/460,071
Filed: June 12, 2003
Attorney Docket No.
247171-000345USPT

: DECISION ON REQUEST
: FOR RECONSIDERATION
: OF PATENT TERM ADJUSTMENT
: AND
: NOTICE OF INTENT TO ISSUE
: CERTIFICATE OF CORRECTION

This is a decision on the "SECOND REQUEST FOR RECONSIDERATION OF PATENT TERM ADJUSTMENT" filed May 6, 2010, requesting that the patent term adjustment determination for the above-identified patent be changed from 1117 days to 1453 days.

The petition to correct the patent term adjustment indicated on the above-identified patent to indicate that the term of the above-identified patent is extended or adjusted by one thousand two hundred seventy-two (1272) days is **GRANTED to the extent indicated herein**.

Patentee has miscalculated the total patent term adjustment as patentee's calculation fails to take into account that a Notice of Appeal was filed February 6, 2007. The period consumed by appellate review, whether successful or not, is excluded from the calculation of B delay. See 35 U.S.C. 154(b)(1)(B)(ii). In this instance, the period is 743 days, beginning on February 6, 2007 and ending on February 17, 2009. The Office has also determined that the period of overlap is 238 days. Thus, B delay is 238 days. The 180 days accorded at issuance was for B delay. The 180 days is being removed and corrected to 238 days.

Additionally, the Office erred in according both 743 days of adjustment for Office delay in issuing a Board decision, pursuant to 37 CFR 1.703(e) and 112 days of adjustment for Office delay in issuing an Examiner's answer, pursuant to 37 CFR 1.703(a)(3). 37 CFR 1.702 provides for a day-to-day adjustment of patent term adjustment for Office delay to the extent that the delays do not overlap. In this instance, the 112 day period of Office delay, begins on August 9, 2007 and ends on November 29, 2007 This period

totally overlaps with the Office delay in issuing the Board decision, which begins on February 6, 2007 and ends on February 17, 2009. Accordingly, only a period of adjustment of 743 days should have been entered. The period of adjustment of 112 days is being removed.

As such, the patent term adjustment is 1272 (1136 "A delay" days, plus 238 "B delay" days, minus 102 applicant delay days) not 1453.

The Office acknowledges the authorization to charge the $200.00 fee set forth in 37 CFR 1.18(e) to the credit card provided.

The Office will *sua sponte* issue a certificate of correction. Pursuant to 37 CFR 1.322, the Office will not issue a certificate of correction without first providing assignee or patentee an opportunity to be heard. Accordingly, patentees are given **one (1) month or thirty (30) days**, whichever is longer, from the mail date of this decision to respond. No extensions of time will be granted under § 1.136.

The application is being forwarded to the Certificates of Branch for issuance of a certificate of correction. The Office will issue a certificate of correction indicating that the term of the above-identified patent is extended or adjusted by **one thousand two hundred seventy-two (1272)** days.

Telephone inquiries specific to this decision should be directed to the undersigned Petitions Attorney at (571) 272-3212.

Patricia Faison-Ball

Patricia Faison-Ball
Senior Petitions Attorney
Office of Petitions

Enclosure: Copy of DRAFT Certificate of Correction

DRAFT

UNITED STATES PATENT AND TRADEMARK OFFICE

# CERTIFICATE OF CORRECTION

PATENT : 7,600,626 B2

DATED : October 13, 2009

INVENTOR(S) : Curtis W. Hallowell

It is certified that error appears in the above-identified patent and that said Letters Patent is hereby corrected as shown below:

On the cover page,

[*] Notice: Subject to any disclaimer, the term of this patent is extended or adjusted under 35 USC 154(b) by (1117) days

Delete the phrase "by 1117 days" and insert – by 1272 days--

UNITED STATES PATENT AND TRADEMARK OFFICE

Commissioner for Patents
United States Patent and Trademark Office
P.O. Box 1450
Alexandria, VA 22313-1450
www.uspto.gov

CUMMINS-ALLISON CORP.
C/O NIXON PEABODY LLP
300 S. RIVERSIDE PLAZA
16TH FLOOR
CHICAGO IL 60606

**MAILED**

JUN 16 2011

OFFICE OF PETITIONS

| | |
|---|---|
| In re Patent No. 7,600,626 | : DECISION ON REQUEST |
| Issued: October 13, 2009 | : FOR RECONSIDERATION |
| Application No. 10/460,071 | : OF PATENT TERM ADJUSTMENT |
| Filed: June 12, 2003 | : AND |
| Attorney Docket No. | : NOTICE OF INTENT TO ISSUE |
| 247171-000345USPT | : CERTIFICATE OF CORRECTION |

This is a decision on the "THIRD REQUEST FOR RECONSIDERATION OF PATENT TERM ADJUSTMENT" filed October 19, 2010, requesting that the patent term adjustment determination for the above-identified patent be corrected to 1453 days.

The petition to correct the patent term adjustment indicated on the above-identified patent to indicate that the term of the above-identified patent is extended or adjusted by one thousand four hundred fifty-three (1453) days is **GRANTED**.

Accordingly, the decision of September 29, 2010 is withdrawn. The present decision **supersedes** the decision mailed on September 29, 2010.

The Office acknowledges the previous submission on December 11, 2009 of the $200.00 fee set forth in 37 CFR 1.18(e). No additional fees are required.

The Office will *sua sponte* issue a certificate of correction. Pursuant to 37 CFR 1.322, the Office will not issue a certificate of correction without first providing assignee or patentee an opportunity to be heard. Accordingly, patentees are given **one (1) month or thirty (30) days**, whichever is longer, from the mail date of this decision to respond. No extensions of time will be granted under § 1.136.

The application is being forwarded to the Certificates of Branch for issuance of a certificate of correction. The Office will issue a certificate of correction indicating that the term of the above-identified patent is extended or adjusted by **one thousand four hundred fifty-three (1453) days.**

Telephone inquiries specific to this decision should be directed to the undersigned Petitions Attorney at (571) 272-3212.

Patricia Faison-Ball

Patricia Faison-Ball
Senior Petitions Attorney
Office of Petitions

Enclosure: Copy of DRAFT Certificate of Correction

DRAFT

UNITED STATES PATENT AND TRADEMARK OFFICE

# CERTIFICATE OF CORRECTION

PATENT : 7,600,626 B2

DATED : October 13, 2009

INVENTOR(S) : Curtis W. Hallowell

It is certified that error appears in the above-identified patent and that said Letters Patent is hereby corrected as shown below:

On the cover page,

[*] Notice: Subject to any disclaimer, the term of this patent is extended or adjusted under 35 USC 154(b) by (1117) days

Delete the phrase "by 1117 days" and insert – by 1453 days--

## SPE RESPONSE FOR CERTIFICATE OF CORRECTION

**DATE** : 01/06/11

**TO SPE OF** : ART UNIT 2624

**SUBJECT** : Request for Certificate of Correction for Appl. No.: 10460274 Patent No.: 6959100

**CofC mailroom date:** 12/27/11

Please respond to this request for a certificate of correction within 7 days.

**FOR IFW FILES:**

Please review the requested changes/corrections as shown in the **COCIN** document(s) in the IFW application image. No new matter should be introduced, nor should the scope or meaning of the claims be changed.

Please complete the response (see below) and forward the completed response to scanning using document code **COCX**.

**FOR PAPER FILES:**

Please review the requested changes/corrections as shown in the attached certificate of correction. Please complete this form (see below) and forward it with the file to:

**Certificates of Correction Branch (CofC)**
**Randolph Square – 9D10-A**
**Palm Location 7580**
*You can fax the Directors/SPE response to 571-273-3421*

**Note:** Should the changes to Related U.S. Application Data be approved?

*Lamonte Newsome*

**Certificates of Correction Branch**

**571-272-3421**

**Thank You For Your Assistance**

**The request for issuing the above-identified correction(s) is hereby:**
Note your decision on the appropriate box.

## SPE RESPONSE FOR CERTIFICATE OF CORRECTION

☒ **Approved** — **All** changes apply.

☐ **Approved in Part** — Specify below which changes **do not** apply.

☐ **Denied** — State the reasons for denial below.

**Comments:** _____

/Bhavesh Mehta/
SPE, TC 2600

**SPE**

2624

**Art Unit**

UNITED STATES PATENT AND TRADEMARK OFFICE

UNITED STATES DEPARTMENT OF COMMERCE
United States Patent and Trademark Office
Address: COMMISSIONER FOR PATENTS
P.O. Box 1450
Alexandria, Virginia 22313-1450
www.uspto.gov

| APPLICATION NO. | FILING DATE | FIRST NAMED INVENTOR | ATTORNEY DOCKET NO. | CONFIRMATION NO. |
|---|---|---|---|---|
| 10/460,355 | 06/13/2003 | Barton A. Pasternak | 35783-181722 (179US) | 3527 |

7590 08/05/2011

Alfred W. Zaher
BLANK ROME LLP
One Logan Square
130 North 18th Street
Philadelphia, PA 19103

| EXAMINER |
|---|
| GANDHI, JAYPRAKASH N |

| ART UNIT | PAPER NUMBER |
|---|---|
| 2125 | |

| MAIL DATE | DELIVERY MODE |
|---|---|
| 08/05/2011 | PAPER |

**Please find below and/or attached an Office communication concerning this application or proceeding.**

The time period for reply, if any, is set in the attached communication.

UNITED STATES PATENT AND TRADEMARK OFFICE

COMMISSIONER FOR PATENTS
UNITED STATES PATENT AND TRADEMARK OFFICE
P.O. BOX 1450
ALEXANDRIA, VA 22313-1450
www.uspto.gov

| | | |
|---|---|---|
| *In re* Patent No. 6990394 | : | |
| Issue Date: January 24, 2006 | : | **DECISION GRANTING** |
| Appl No.: 10/460,355 | : | **PETITION** |
| Filed: June 13, 2003 | : | *37 CFR 1.324* |
| For: LIGHTING CONTROL SYSTEM AND METHOD | : | |
| | : | |
| | : | |
| | : | |

This is a decision on the petition filed February 04, 2011 to correct inventorship under 37 CFR 1.324.

The petition is granted.

The patented file is being forwarded to Certificate of Corrections Branch for issuance of a certificate naming only the actual inventor or inventors.

JNGandhi

Jayprakash N. Gandhi
Supervisory Patent Examiner
Art Unit 2835
Technology Center 2800

Alfred W. Zaher
BLANK ROME LLP
One Logan Square
130 North 18th Street
Philadelphia, PA 19103

UNITED STATES PATENT AND TRADEMARK OFFICE

Commissioner for Patents
United States Patent and Trademark Office
P.O. Box 1450
Alexandria, VA 22313-1450
www.uspto.gov

**ANDREWS KURTH LLP**
**1350 I STREET, N.W.**
**SUITE 1100**
**WASHINGTON DC 20005**

MAILED

JAN 24 2011

OFFICE OF PETITIONS

In re Application of :
Mark ROSENBERG :
Application No. 10/460,487 :
Filed: June 13, 2003 :
Attorney Docket No. 5547C1.00 :

ON PETITION

This is a decision on the petition under the unintentional provisions of 37 CFR 1.137(b), filed December 6, 2010.

The petition is **not approved because it is MOOT**.

The record shows that a final Office action was mailed on April 6, 2010, which set a three (3) month shortened statutory period for reply. Accordingly, a reply was due on or before July 6, 2010. The reply and a three (3) month extension of time was filed October 6, 2010, which extended the reply period from July 6, 2010 to October 6, 2010. In this regard, the application was not yet abandoned, the filing of a petition to revive was premature because the reply, with a proper extension of time, was timely filed. For the reason stated above, the petition filed December 6, 2010 is moot.

In view of the above, the $810 fee submitted with the petition dated December 6, 2010, will be credited to Deposit Account No. 50-2849 in due course.

Inquiries concerning this decision may be directed to the undersigned at (571) 272-6735.

This matter is being referred to Technology Center AU 3693 for further action as appropriate.

/Diane C. Goodwyn/
Diane C. Goodwyn
Petitions Examiner
Office of Petitions