UNITED STATES PATENT AND TRADEMARK OFFICE

Commissioner for Patents
United States Patent and Trademark Office
P.O. Box 1450
Alexandria, VA 22313-1450
www.uspto.gov

STERNE, KESSLER, GOLDSTEIN & FOX P.L.L.C.
1100 NEW YORK AVENUE, N.W.
WASHINGTON DC 20005

MAILED

DEC 29 2011

OFFICE OF PETITIONS

In re Application of
Alexa L. Martinez et al.
Application No. 10/669,597
Filed: February 19, 2008
Attorney Docket No.
2057.0040002/ELE/HCC

: DECISION ON APPLICATION
:FOR PATENT TERM ADJUSTMENT

This is a decision on the "Request for Reconsideration of Patent Term Adjustment Determination Under 37 C.F.R. § 1.705(b)", filed December 20, 2011. Applicants request that the patent term adjustment at the time of the mailing of the Notice of Allowance be corrected from 427 days to 508 days.

The application for patent term adjustment is **GRANTED**.

The Office has updated the PAIR screen to reflect that the correct Patent Term Adjustment (PTA) determination at the time of the mailing of the Notice of Allowance is FIVE HUNDRED EIGHT (508) days. A copy of the updated PAIR screen, showing the correct determination, is enclosed.

On September 20, 2011, the Office mailed the Determination of Patent Term Adjustment under 35 U.S.C. 154(b) in the above-identified application. The Notice stated that the patent term adjustment (PTA) to date is 427 days. The instant application for patent term adjustment was timely filed[1]. Applicants dispute the reduction of 81 days of PTA for applicant delay in filing an Information Disclosure Statement (IDS) on May 24, 2011 after the filing of a response to a non-Final Office Action on March 4, 2011.

Applicants specifically state that the patent issuing from the application is not subject to a terminal disclaimer.

A review of the record reveals that on March 4, 2011 applicants filed a response to the non-Final Office action mailed October 4, 2010. Then on May 24, 2011, applicants filed the Information Disclosure Statement (IDS). Pursuant to 37 CFR § 1.704(c)(8), the submission of a supplemental reply or other paper, other than a supplemental reply or other paper expressly requested by the examiner, after a reply has been filed, is a failure to engage in reasonable efforts to conclude prosecution. The record does not support a conclusion that the IDS was expressly requested by the examiner. Accordingly, filing of the IDS may be considered a failure to engage and a proper basis for reduction.

---

[1] PALM records indicate that the Issue Fee was also received on December 20, 2011.

However, the record supports a conclusion that the IDS was received May 24, 2011 with a 37 CFR 1.704(d) statement.

> 37 CFR 1.704(d) provides that a paper containing only an information disclosure statement in compliance with 37 CFR 1.97 and 1.98 will not be considered (result in a reduction) under 37 CFR 1.704(c)(6), 1.704(c)(8), 1.704(c)(9), or 1.704(c)(10) if it is accompanied by a statement that each item of information contained in the information disclosure statement was first cited in any communication from a foreign patent office in a counterpart application and that this communication was not received by any individual designated in 37 CFR 1.56(c) more than thirty days prior to the filing of the information disclosure statement. This provision will permit applicants to submit information first cited in a communication from a foreign patent office in a counterpart application to the Office without a reduction in patent term adjustment if an information disclosure statement is promptly (within thirty days of receipt of the first communication) submitted to the Office. Compliance with the statement requirement of 37 CFR 1.704(d) does not substitute for compliance with any relevant requirement of 37 CFR 1.97 or 1.98. 37 CFR 1.704(d) also provides that this thirty-day period is not extendableeply was expressly requested by the examiner, within the meaning of § 1.704(c)(8). Accordingly, no reduction is warranted.

In view thereof, no reduction should have been taken for the filing of the IDS after the mailing of the response to the non-Final Office Action on May 24, 2011.

Receipt of the $200.00 fee set forth in 37 CFR 1.18(e) is acknowledged. No additional fees are required.

The application is being forwarded to the Office of Data Management for issuance of the patent. The patent term adjustment indicated on the patent (as shown on the Issue Notification mailed about three weeks prior to patent issuance) will include any additional adjustment accrued both for Office delay in issuing the patent more than four months after payment of the issue fee and satisfaction of all outstanding requirements, and for the Office taking in excess of three years to issue the patent (to the extent that the three-year period does not overlap with periods already accorded).

Telephone inquiries specific to this decision should be directed to the undersigned at (571) 272-3212.

Patricia Faison-Ball

Patricia Faison-Ball
Senior Petitions Attorney
Office of Petitions

Enclosure: Copy of Revised PALM Screen

Patent Term Adjustments

PTA/PTE Information | Patent Term Adjustment | Patent Term Extension

Application Number*: 10669597 Search | Explanation of PTA Calculation | Explanation of PTE Calculation

PTA Calculations for Application: 10669597

Application Filing Date	09/25/2003	OverLapping Days Between (A and B) or (A and C)	0
Issue Date of Patent		Non-Overlapping USPTO Delays:	1100
A Delays	1100	PTO Manual Adjustment	81
B Delays	0	Applicant Delay (APPL)	673
C Delays	0	Total PTA (days)	508

* - Sorted Column

File Contents History

Action Number	Action Recorded Date	Action Due Date	Action Code	Action Description	Duration PTO	Duration APPL	Parent Action Number
130	12/28/2011		P028	Adjustment of PTA Calculation by PTO	81	0	
124	09/20/2011		MN/=.	Mail Notice of Allowance		0	
123	09/19/2011		OAR	Office Action Review		0	
122	09/19/2011		OAR	Office Action Review		0	
121	09/19/2011		IREV	Issue Revision Completed		0	
120	09/19/2011		DVER	Document Verification		0	
119	09/19/2011		N/=.	Notice of Allowance Data Verification Completed		0	
118	09/19/2011		DOCK	Case Docketed to Examiner in GAU		0	
117	09/16/2011		EX.A	Examiner's Amendment Communication		0	
116	09/16/2011		CNTA	Allowability Notice		0	
113	07/29/2011		FWDX	Date Forwarded to Examiner		0	
112	07/27/2011		A.NE	Amendment after Final Rejection		0	
110	05/27/2011		AF/D	Affidavit(s) (Rule 131 or 132) or Exhibit(s) Received		0	
108	05/27/2011		MCTFR	Mail Final Rejection (PTOL - 326)		0	
107	05/25/2011		OAR	Office Action Review		0	
115	05/24/2011		IDSC	Information Disclosure Statement considered		0	
114	05/24/2011		IDSC	Information Disclosure Statement considered		0	
111	05/24/2011	03/04/2011	M844	Information Disclosure Statement (IDS) Filed		81	99
109	05/24/2011		M844	Information Disclosure Statement (IDS) Filed		0	
106	05/24/2011		WIDS	Information Disclosure Statement (IDS) Filed		0	
105	05/24/2011		WIDS	Information Disclosure Statement (IDS) Filed		0	
104	05/23/2011		CTFR	Final Rejection		0	
100	03/08/2011		FWDX	Date Forwarded to Examiner		0	
103	03/04/2011		IDSC	Information Disclosure Statement considered		0	
102	03/04/2011		EIDS.	Electronic Information Disclosure Statement		0	
101	03/04/2011		AF/D	Affidavit(s) (Rule 131 or 132) or Exhibit(s) Received		0	
99	03/04/2011	01/04/2011	A...	Response after Non-Final Action		59	94
98	03/04/2011		XT/G	Request for Extension of Time - Granted		0	
97	03/04/2011		WIDS	Information Disclosure Statement (IDS) Filed		0	
96	10/20/2010		MEXIN	Mail Examiner Interview Summary (PTOL - 413)		0	
95	10/20/2010		EXIN	Examiner Interview Summary Record (PTOL - 413)		0	
94	10/04/2010		MCTNF	Mail Non-Final Rejection		0	
93	10/01/2010		CTNF	Non-Final Rejection		0	
92	04/15/2010		IDSC	Information Disclosure Statement considered		0	
90	04/15/2010		M844	Information Disclosure Statement (IDS) Filed		0	
89	04/15/2010		RCAP	Reference capture on IDS		0	
88	04/15/2010		M844	Information Disclosure Statement (IDS) Filed		0	
87	04/15/2010		WIDS	Information Disclosure Statement (IDS) Filed		0	
86	12/08/2009		FWDX	Date Forwarded to Examiner		0	
85	12/08/2009		W/N=	Withdrawal of Notice of Allowance		0	
84	10/28/2009		FIDC	Finished Initial Data Capture		0	
91	10/01/2009		IDSC	Information Disclosure Statement considered		0	
83	10/01/2009		RCAP	Reference capture on IDS		0	
82	10/01/2009		M844	Information Disclosure Statement (IDS) Filed		0	
81	10/01/2009		WIDS	Information Disclosure Statement (IDS) Filed		0	
80	09/14/2009		EIDC	Export to Initial Data Capture		0	
79	09/09/2009		MEX.A	Mail Examiner's Amendment		0	
78	09/09/2009		MN/=.	Mail Notice of Allowance		0	
77	09/09/2009		IREV	Issue Revision Completed		0	
76	09/09/2009		DVER	Document Verification		0	
75	09/09/2009		N/=.	Notice of Allowance Data Verification Completed		0	
74	09/09/2009		DOCK	Case Docketed to Examiner in GAU		0	
73	08/31/2009		EX.A	Examiner's Amendment Communication		0	
72	08/31/2009		CNTA	Allowability Notice		0	
70	05/26/2009		FWDX	Date Forwarded to Examiner		0	

69	05/22/2009		A.NE	Amendment after Final Rejection			0
68	05/22/2009		C602	Oath or Declaration Filed (Including Supplemental)			0
71	04/22/2009		EXIN	Examiner Interview Summary Record (PTOL - 413)			0
66	03/25/2009	03/20/2008	MCTFR	Mail Final Rejection (PTOL - 326)	370		38
67	03/23/2009		LET.	Miscellaneous Incoming Letter			0
65	01/12/2009		IDSC	Information Disclosure Statement considered			0
60	01/12/2009		RCAP	Reference capture on IDS			0
59	01/12/2009	11/20/2007	M844	Information Disclosure Statement (IDS) Filed		419	38
58	01/12/2009		WIDS	Information Disclosure Statement (IDS) Filed			0
64	08/19/2008		IDSC	Information Disclosure Statement considered			0
57	08/19/2008		M844	Information Disclosure Statement (IDS) Filed			0
55	08/19/2008		WIDS	Information Disclosure Statement (IDS) Filed			0
63	07/07/2008		IDSC	Information Disclosure Statement considered			0
56	07/07/2008		M844	Information Disclosure Statement (IDS) Filed			0
54	07/07/2008		WIDS	Information Disclosure Statement (IDS) Filed			0
62	04/15/2008		IDSC	Information Disclosure Statement considered			0
52	04/15/2008		M844	Information Disclosure Statement (IDS) Filed			0
49	04/15/2008		WIDS	Information Disclosure Statement (IDS) Filed			0
61	02/11/2008		IDSC	Information Disclosure Statement considered			0
51	02/11/2008		M844	Information Disclosure Statement (IDS) Filed			0
47	02/11/2008		WIDS	Information Disclosure Statement (IDS) Filed			0
46	02/04/2008		CTFR	Final Rejection			0
45	12/05/2007		IDSC	Information Disclosure Statement considered			0
43	12/05/2007		RCAP	Reference capture on IDS			0
42	12/05/2007		EIDS.	Electronic Information Disclosure Statement			0
40	12/05/2007		WIDS	Information Disclosure Statement (IDS) Filed			0
39	12/02/2007		FWDX	Date Forwarded to Examiner			0
38	11/20/2007		A...	Response after Non-Final Action			0
37	08/22/2007	07/07/2007	MCTNF	Mail Non-Final Rejection	46		24
44	06/18/2007		IDSC	Information Disclosure Statement considered			0
36	06/18/2007		M844	Information Disclosure Statement (IDS) Filed			0
35	06/18/2007		WIDS	Information Disclosure Statement (IDS) Filed			0
34	04/02/2007		CTNF	Non-Final Rejection			0
25	03/15/2007		FWDX	Date Forwarded to Examiner			0
29	03/07/2007		IDSC	Information Disclosure Statement considered			0
28	03/07/2007		RCAP	Reference capture on IDS			0
27.7	03/07/2007		M844	Information Disclosure Statement (IDS) Filed			0
27	03/07/2007		WIDS	Information Disclosure Statement (IDS) Filed			0
26	03/07/2007		C614	New or Additional Drawing Filed			0
24	03/07/2007	11/13/2006	ELC.	Response to Election / Restriction Filed		114	21
23	02/07/2007		NINA	Mail Notice of Informal or Non-Responsive Amendment			0
22	11/21/2006		FWDX	Date Forwarded to Examiner			0
21.1	11/13/2006		A.I.	Informal or Non-Responsive Amendment after Examiner Action			0
21	11/13/2006		ELC.	Response to Election / Restriction Filed			0
20	10/10/2006	11/25/2004	MCTRS	Mail Restriction Requirement	684		0.5
19	10/02/2006		CTRS	Restriction/Election Requirement			0
18	11/22/2005		TSSCOMP	IFW TSS Processing by Tech Center Complete			0
30	10/14/2005		IDSC	Information Disclosure Statement considered			0
17.7	10/14/2005		M844	Information Disclosure Statement (IDS) Filed			0
17	10/14/2005		WIDS	Information Disclosure Statement (IDS) Filed			0
31	08/19/2005		IDSC	Information Disclosure Statement considered			0
16.7	08/19/2005		M844	Information Disclosure Statement (IDS) Filed			0
16	08/19/2005		WIDS	Information Disclosure Statement (IDS) Filed			0
32	04/08/2005		IDSC	Information Disclosure Statement considered			0
15	04/08/2005		RCAP	Reference capture on IDS			0
14.7	04/08/2005		M844	Information Disclosure Statement (IDS) Filed			0
14	04/08/2005		WIDS	Information Disclosure Statement (IDS) Filed			0
13	01/03/2005		LET.	Miscellaneous Incoming Letter			0
33	06/02/2004		IDSC	Information Disclosure Statement considered			0
12	06/02/2004		RCAP	Reference capture on IDS			0
11.7	06/02/2004		M844	Information Disclosure Statement (IDS) Filed			0
11	06/02/2004		WIDS	Information Disclosure Statement (IDS) Filed			0
10	02/06/2004		DOCK	Case Docketed to Examiner in GAU			0
9	12/18/2003		WROIPE	Application Return from OIPE			0
8	12/18/2003		COMP	Application Is Now Complete			0
7	12/18/2003		ROIPE	Application Return TO OIPE			0
6	12/18/2003		OIPE	Application Dispatched from OIPE			0
5	12/18/2003		COMP	Application Is Now Complete			0
4	12/08/2003		CLSS	CASE CLASSIFIED BY OIPE			0
3	12/08/2003		L194	Cleared by OIPE CSR			0
2	10/31/2003		SCAN	IFW Scan & PACR Auto Security Review			0
1	09/25/2003		IEXX	Initial Exam Team nn			0
0.5	09/25/2003		EFILE	Filing date			0

Export to: Excel

UNITED STATES PATENT AND TRADEMARK OFFICE

Commissioner for Patents
United States Patent and Trademark Office
P.O. Box 1450
Alexandria, VA 22313-1450
www.uspto.gov

MAILED

SEP 2 0 2010

OFFICE OF PETITIONS

Henri Duong
316 1/2 E Glendon Way
Alhambra CA 91801

In re Application of :
Henry Duong :
Application No. 10/669,668 : ON PETITION
Filed: September 23, 2003 :
Attorney Docket No.

This is a decision on the second renewed petition under 37 CFR 1.181 to withdraw the holding of abandonment, filed April 13, 2009.

The renewed petition is **DISMISSED**.

The application became abandoned on November 17, 2007, after a proper response was not received to the Notice of Non-Compliant Appeal Brief mailed October 16, 2007, which set a shortened period for reply of one-months from its mailing date. A Notice of Abandonment was mailed April 30, 2008.

The petition filed April 13, 2009, does not make clear its purpose. Petitioner states:

> I request that Mr. Director and Kenya A. McLaughlin of the U.S. Patent Office accept to waive the dismissal so as to regulate the application for no fee or you are requested to refund the unused fees for my application as follows...

Excerpt taken from "Request for withdrawing the holding of abandonment for no fee on application no. 10/669,668 filing date 09/23,2003 Art Unit 3628", filed April 13, 2009, p. 1.

Without more, the undersigned is unable to determine the remedy that petitioner is seeking.

Notwithstanding, a review of the application file reveals that a Notice of Non-Complaint Appeal Brief was mailed on October 16, 2007. Communications were filed on January 25, 2008, February 19, 2008, and February 22, 2008, none of which were proper responses to the Notice of Non-Compliant Appeal Brief. On May 1, 2008, applicant filed an Appeal Brief and a Notice of Appeal that were not accompanied by the request for extension of time within the fifth month that would have been necessary to make the response timely. The application was properly held abandoned on November 17, 2007, because a proper and timely response to the Notice of Non-Compliant Appeal Brief was not filed within the allowable period. The petition filed March 5, 2009, did not present any additional facts or circumstances that would allow the undersigned to reach a different conclusion. The petition was dismissed by a decision mailed April 10, 2009. Likewise, the instant renewed petition, does not present any additional facts or circumstances that would allow the undersigned to reach a conclusion that holding of abandonment was improperly imposed. The petition is dismissed, accordingly.

Alternatively, petitioner may revive the application based on unintentional abandonment under 37 CFR 1.137(b). A grantable petition pursuant to 37 CFR 1.137(b) must be accompanied by the required reply, the required petition fee ($1,620.00 for a large entity or $810.00 for a verified small entity), and a statement that the **entire** delay in filing the required reply from the due date for the reply until the filing of a grantable petition pursuant to 37 CFR 1.137(b) was unintentional.

Further correspondence with respect to this matter should be addressed as follows:

By mail: Commissioner for Patents
United States Patent and Trademark Office
Box 1450
Alexandria, VA 22313-1450

By facsimile: (571) 273-8300
Attn: Office of Petitions

Inquiries regarding the sufficiency of the reply to the Notice of Non-Compliant Appeal Brief should be directed to the Technology Center. Inquires regarding any request for refund of fees paid should be directed to the Office of Finance, Office of Refund. Telephone inquiries concerning this decision should be directed to the undersigned (571) 272-3222.

/Kenya A. McLaughlin/

Kenya A. McLaughlin
Petitions Attorney
Office of Petitions

UNITED STATES PATENT AND TRADEMARK OFFICE

Commissioner for Patents
United States Patent and Trademark Office
P.O. Box 1450
Alexandria, VA 22313-1450
www.uspto.gov

CUMMINS-ALLISON CORP.
C/O NIXON PEABODY LLP
300 S. Riverside Plaza
16th Floor
CHICAGO IL 60606

MAILED
DEC 02 2010
OFFICE OF PETITIONS

In re Application of	:	
Jones et al.	:	
Application No. 10/669787	:	ON APPLICATION FOR
Filing or 371(c) Date: 09/24/2003	:	PATENT TERM ADJUSTMENT
Atty Docket No.:	:	
247171-000381USPT	:	

This is in response to the APPLICATION FOR PATENT TERM ADJUSTMENT, filed September 16, 2010. Applicant requests that the Patent Term Adjustment be corrected to 1305 days, not 901 days as calculated by the Office as of the mailing of the initial determination of patent term adjustment. Applicant requests this correction solely on the basis that the Office will take in excess of three years to issue this patent. The application for patent term adjustment is properly treated under 37 C.F.R. § 1.705(b).

As the instant application for patent term adjustment requests reconsideration of the patent term adjustment as it relates to the Office's failure to issue the patent within 3 years of the filing date, the application for patent term adjustment under 37 CFR 1.705(b) is **DISMISSED as PREMATURE**.

Knowledge of the actual date the patent issues is required to calculate the amount, if any, of additional patent term patentee is entitled to for Office failure to issue the patent within 3 years. See § 1.702(b). (This is true even where a request for continued examination (RCE) was filed). The computer will not undertake the § 1.702(b) calculation until the actual date of issuance of the patent has been determined. Likewise, the computer will not calculate any further Office delay under § 1.702(a)(4) or applicant delay under § 1.704(c)(10) until the actual date of issuance of the patent has been determined. As such, the Office can not make a determination on the correctness of the patent term adjustment until the patent has issued.

Requesting reconsideration of the patent term adjustment to be indicated on the patent under 37 CFR 1.705(b) based on the initial determination of patent term adjustment and a projected issuance date of the patent (or even the filing date of the request for continued examination) is premature. Accordingly, it is appropriate to dismiss as premature such a request.

Rather than file an application for patent term adjustment under 37 CFR 1.705(b) contesting the 37 CFR 1.702(b) calculation at the time of the mailing of the notice of allowance, applicant is advised that they may wait until the time of the issuance of the patent and file a request for reconsideration of the patent term adjustment pursuant to 37 CFR 1.705(d). As the USPTO does not calculate the amount of time earned pursuant to 37 CFR 1.702(b) until the time of the issuance of the patent, the Office will consider any request for reconsideration of the patent term adjustment due to an error in the calculation of 37 CFR 1.702(b) to be timely if the request for reconsideration is filed within two months of the issuance of the patent. However, as to all other bases for contesting the initial determination of patent term adjustment received with the notice of allowance, applicant must timely file an application for patent term adjustment prior to the payment of the issue fee[1].

The Office acknowledges submission of the $200.00 fee set forth in 37 CFR 1.18(e) for consideration of the application for patent term adjustment under 37 CFR 1.705(b).

Any request for reconsideration of the patent term adjustment indicated on the patent must be timely filed within 2 months after issuance pursuant to 37 CFR 1.705(d) and ***must*** include payment of the required fee under 37 CFR 1.18(e).

The Office of Data Management has been advised of this decision. This application is being referred to the Office of Data Management for issuance of the patent.

Telephone inquiries specific to this decision should be directed to the undersigned at (571) 272-3232.

/DLW/

Derek L. Woods
Attorney
Office of Petitions

[1] For example, if applicant disputes both the calculation of patent term adjustment under 37 CFR 1.702(a)(1) for Office failure to mail a first Office action or notice of allowance not later than fourteen months after the date on which the application was filed and under 37 CFR 1.702(b) for Office failure to issue a patent within three years of the actual filing date of the application, then applicant must still timely file an application for patent term adjustment prior to the payment of the issue fee to contest the calculation of Office delay in issuing a first Office action or notice of allowance. See 37 CFR 1.705(b) and 35 U.S.C. 154(b)(3)(B). A dispute as to the calculation of the §1.702(a)(1) period raised on request for reconsideration of patent term adjustment under 37 CFR 1.705(d) will be dismissed as untimely filed.

PTO/SB/66 (03-09)
Approved for use through 03/31/2012. OMB 0651-0016
U.S. Patent and Trademark Office: U.S. DEPARTMENT OF COMMERCE
Under the Paperwork Reduction Act of 1995, no persons are required to respond to a collection of information unless it displays valid OMB control number.

PETITION TO ACCEPT UNINTENTIONALLY DELAYED PAYMENT OF MAINTENANCE FEE IN AN EXPIRED PATENT (37 CFR 1.378(c))

Patent Number	Issue Date (YYYY-MM-DD)	Application Number	Filing Date (YYYY-MM-DD)	Docket Number (if applicable)
7,111,762	2006-09-26	10/669,788	2003-09-24	NSEE-200004US01

CAUTION: Maintenance fee (and surcharge, if any) payment must correctly identify: (1) the patent number and (2) the application number of the actual U.S. application leading to issuance of that patent to ensure the fee(s) is/are associated with the correct patent. 37 CFR 1.366(c) and (d).

SMALL ENTITY
☒ Patentee claims, or has previously claimed, small entity status. See 37 CFR 1.27.

LOSS OF ENTITLEMENT TO SMALL ENTITY STATUS
☐ Patentee is no longer entitled to small entity status. See 37 CFR 1.27(g)

NOT Small Entity		Small Entity	
Fee	Code	Fee	Code
○ 3 ½ year	(1551)	◉ 3 ½ year	(2551)
○ 7 ½ year	(1552)	○ 7 ½ year	(2552)
○ 11 ½ year	(1553)	○ 11 ½ year	(2553)

SURCHARGE
The surcharge required by 37 CFR 1.20(i)(2) (Fee Code 1558) must be paid as a condition of accepting unintentionally delayed payment of the maintenance fee.

MAINTENANCE FEE (37 CFR 1.20(e)-(g))
The appropriate maintenance fee must be submitted with this petition.

STATEMENT
THE UNDERSIGNED CERTIFIES THAT THE DELAY IN PAYMENT OF THE MAINTENANCE FEE TO THIS PATENT WAS UNINTENTIONAL

PETITIONER(S) REQUEST THAT THE DELAYED PAYMENT OF THE MAINTENANCE FEE BE ACCEPTED AND THE PATENT REINSTATED

THIS PORTION MUST BE COMPLETED BY THE SIGNATORY OR SIGNATORIES

37 CFR 1.378(d) states: "Any petition under this section must be signed by an attorney or agent registered to practice before the Patent and Trademark Office, or by the patentee, the assignee, or other party in interest."

I certify, in accordance with 37 CFR 1.4(d)(4) that I am

◉ An attorney or agent registered to practice before the Patent and Trademark Office

○ A sole patentee

○ A joint patentee; I certify that I am authorized to sign this submission on behalf of all the other patentees.

○ A joint patentee; all of whom are signing this e-petition

○ The assignee of record of the entire interest

Under the Paperwork Reduction Act of 1995, no persons are required to respond to a collection of information unless it displays valid OMB control number.

Patent Practitioner			
A signature of the applicant or representative is required in accordance with 37 CFR 1.33 and 10.18. Please see 37 CFR 1.4(d) for the form of the signature			
Signature	/Thomas E. Young/	Date (YYYY-MM-DD)	2010-11-18
Name	Thomas E. Young	Registration Number	28924

This collection of information is required by 37 CFR 1.378(c). The information is required to obtain or retain a benefit by the public which is to file (and by the USPTO to process) an application. Confidentiality is governed by 35 U.S.C. 122 and 37 CFR 1.11 and 1.14. This collection is estimated to take 1 hour to complete, including gathering, preparing, and submitting the completed application form to the USPTO. Time will vary depending upon the individual case. Any comments on the amount of time you require to complete this form and/ or suggestions for reducing this burden, should be sent to the Chief Information Officer, U.S. Patent and Trademark Office, U.S. Department of Commerce, P.O. Box 1450, Alexandria, VA 22313-1450. DO NOT SEND FEES OR COMPLETED FORMS TO THIS ADDRESS. **This form can only be used when in conjunction with EFS-Web. If this form is mailed to the USPTO, it may cause delays in reinstating the patent.**

Privacy Act Statement

The Privacy Act of 1974 (P.L. 93-579) requires that you be given certain information in connection with your submission of the attached form related to a patent application or patent. Accordingly, pursuant to the requirements of the Act, please be advised that: (1) the general authority for the collection of this information is 35 U.S.C. 2(b)(2); (2) furnishing of the information solicited is voluntary; and (3) the principal purpose for which the information is used by the U.S. Patent and Trademark Office is to process and/or examine your submission related to a patent application or patent. If you do not furnish the requested information, the U.S. Patent and Trademark Office may not be able to process and/or examine your submission, which may result in termination of proceedings or abandonment of the application or expiration of the patent.

The information provided by you in this form will be subject to the following routine uses:

1. The information on this form will be treated confidentially to the extent allowed under the Freedom of Information Act (5 U.S.C. 552) and the Privacy Act (5 U.S.C. 552a). Records from this system of records may be disclosed to the Department of Justice to determine whether the Freedom of Information Act requires disclosure of these records.

2. A record from this system of records may be disclosed, as a routine use, in the course of presenting evidence to a court, magistrate, or administrative tribunal, including disclosures to opposing counsel in the course of settlement negotiations.

3. A record in this system of records may be disclosed, as a routine use, to a Member of Congress submitting a request involving an individual, to whom the record pertains, when the individual has requested assistance from the Member with respect to the subject matter of the record.

4. A record in this system of records may be disclosed, as a routine use, to a contractor of the Agency having need for the information in order to perform a contract. Recipients of information shall be required to comply with the requirements of the Privacy Act of 1974, as amended, pursuant to 5 U.S.C. 552a(m).

5. A record related to an International Application filed under the Patent Cooperation Treaty in this system of records may be disclosed, as a routine use, to the International Bureau of the World Intellectual Property Organization, pursuant to the Patent Cooperation Treaty.

6. A record in this system of records may be disclosed, as a routine use, to another federal agency for purposes of National Security review (35 U.S.C. 181) and for review pursuant to the Atomic Energy Act (42 U.S.C. 218(c)).

7. A record from this system of records may be disclosed, as a routine use, to the Administrator, General Services, or his/her designee, during an inspection of records conducted by GSA as part of that agency's responsibility to recommend improvements in records management practices and programs, under authority of 44 U.S.C. 2904 and 2906. Such disclosure shall be made in accordance with the GSA regulations governing inspection of records for this purpose, and any other relevant (i.e., GSA or Commerce) directive. Such disclosure shall not be used to make determinations about individuals.

8. A record from this system of records may be disclosed, as a routine use, to the public after either publication of the application pursuant to 35 U.S.C. 122(b) or issuance of a patent pursuant to 35 U.S.C. 151. Further, a record may be disclosed, subject to the limitations of 37 CFR 1.14, as a routine use, to the public if the record was filed in an application which became abandoned or in which the proceedings were terminated and which application is referenced by either a published application, an application open to public inspections or an issued patent.

9. A record from this system of records may be disclosed, as a routine use, to a Federal, State, or local law enforcement agency, if the USPTO becomes aware of a violation or potential violation of law or regulation.

UNITED STATES PATENT AND TRADEMARK OFFICE

Commissioner for Patents
United States Patent and Trademark Office
P.O. Box 1450
Alexandria, VA 22313-1450
www.uspto.gov

In re Patent No. 7111762
Issue Date: September 26,2006
Application No. 10669788
Filed: September 24,2003
Attorney Docket No. NSEE 2 00004

:
:DECISION GRANTING PETITION
:UNDER 37 CFR 1.378(c)
:

This is a decision on the electronic petition, filed November 18,2010 ,under 37 CFR 1.378(c) to accept the unintentionally delayed payment of the 3.5 year maintenance fee for the above-identified patent.

The petition is **GRANTED**.

The maintenance fee is accepted, and the above-identified patent reinstated as of November 18,2010 . This decision also constitutes notice that the fee has been accepted. An electronic copy of the petition and this decision has been created as an entry in the Image File Wrapper. Nevertheless, petitioner should print and retain an independent copy.

Telephone inquiries related to this electronic decision should be directed to the Electronic Business Center at 1-866-217-9197.

UNITED STATES PATENT AND TRADEMARK OFFICE

Commissioner for Patents
United States Patent and Trademark Office
P.O. Box 1450
Alexandria, VA 22313-1450
www.uspto.gov

Date : 3/10/11
Patent No. : 7,805,332 B2
Serial No. : 10/669,791
Inventor(s) : Wilson
Issued : September 28, 2010
Title : **SYSTEM AND METHOD FOR SEGMENTING AND TARGETING AUDIENCE MEMBERS**
Docket No. : **54820-00602**

Re: Request for Reconsideration

Consideration has been given your request for the issuance of a certificate of correction for the above-identified patent under the provisions of 37 CFR 1.322 and/or 1.323.

Assignees' names and addresses (assignment data) printed in a patent are based *solely* on information supplied in the appropriate space for identifying the assignment data, i.e., item 3 of the Fee(s) Transmittal Form PTOL-85B. After payment of the issue fee, correction of assignment data submitted on the PTOL-85B can only be done by Certificate of Correction under 37 CFR 1.323, with a request under 37 CFR 3.81(b).

A petition is required to correct the Assignee, under 37 CFR 1.183, and should include: (1) the petition fee set forth in 37 CFR 1.117(h) (currently $130); (2) the correct name and address of the assignee; (3) the reel and frame number where the assignment is recorded or proof of the date the assignment was submitted for recordation.

A request for a patent to be corrected to state the name of the assignee must:

A. state that the assignment was submitted for recordation as set forth in 37 CFR 3.11 before issuance of the patent;
B. include a request for a certificate of correction under 37 CFR 1.323 along with the fee set forth in 37 CFR 1.20(a); and
C. include the processing fee set forth in 37 CFR 1.17(i).

If the request is granted, Certificates of Correction Branch will be notified that a Certificate of Correction may be issued.
See Manual of Patent Examining Procedure, Section 1481.01 (Rev. 3) (Oct. 2005).

Applicant has not included items A and or C above, accordingly, the request for Certificate of

Correction to add or change the assignee data is dismissed.
Any request under 37 CFR 3.81(b) should be directed to the following address or facsimile number:

By mail:	Mail Stop PETITIONS Commissioner for Patents Post Office Box 1450 Alexandria, VA 22313-1450
By hand:	Customer Service Window Mail Stop Petitions Randolph Building 401 Dulany Street Alexandria, VA 22314
By fax:	571-273-8300 ATTN: Office of Petitions

If a fee (currently $100) was previously submitted for consideration of a Request for Certificate of Correction, under CFR 1.323, to correct assignment data, no additional fee is required.

Ernest C. White, *LIE*
ernest.white@uspto.gov
(571) 272-3385
For Mary F. Diggs (703) 756-1580
Decisions & Certificates
of Correction Branch

KELLEY DRYE & WARREN LLP
3050 K STREET, NW
SUITE 400
WASHINGTON DC 20007

ecw

UNITED STATES PATENT AND TRADEMARK OFFICE

UNITED STATES DEPARTMENT OF COMMERCE
United States Patent and Trademark Office
Address: COMMISSIONER FOR PATENTS
P.O. Box 1450
Alexandria, Virginia 22313-1450
www.uspto.gov

APPLICATION NO.	FILING DATE	FIRST NAMED INVENTOR	ATTORNEY DOCKET NO.	CONFIRMATION NO.
10/670,144	09/23/2003	Esko Alanen	881B.0006.U1(US)	1370

29683 7590 03/20/2012
HARRINGTON & SMITH
4 RESEARCH DRIVE, Suite 202
SHELTON, CT 06484-6212

EXAMINER
NGUYEN, HUONG Q

ART UNIT	PAPER NUMBER
3736	

MAIL DATE	DELIVERY MODE
03/20/2012	PAPER

Please find below and/or attached an Office communication concerning this application or proceeding.

The time period for reply, if any, is set in the attached communication.

UNITED STATES PATENT AND TRADEMARK OFFICE

Commissioner for Patents
United States Patent and Trademark Office
P.O. Box 1450
Alexandria, VA 22313-1450
www.uspto.gov

HARRINGTON & SMITH
4 RESEARCH DRIVE, Suite 202
SHELTON CT 06484-6212

In re Application of	:	
ALANEN, ESKO et al	:	
Serial No.: 10/670,144	:	
Filed: Sep. 23, 2003	:	ABANDONMENT RECISSION
Docket: 881B.0006.U1(US)	:	LETTER
Title: METHOD FOR MEASURING OF EDEMA	:	

LETTER RESCINDING NOTICE OF ABANDONMENT

This is a decision on petition to withdraw holding of abandonment filed on April 26, 2010. A review of the record shows that a notice of abandonment, Form PTO-1432, was mailed on March 29, 2010, in patent application serial number 10/670,144. The notice of abandonment alleged that applicant failed to file a response to the Office letter dated September 17, 2009. However, the record does show a complete response under Rule 111 was filed on March 22, 2010 with three months extension of time fee. The notice of abandonment of March 29, 2010 was sent in error. The Rule 111 amendment of March 29, 2010 is considered timely and accordingly, the notice of abandonment is, therefore, hereby rescinded.

The application is being returned to the examiner via the Supervisory Patent Examiner for consideration of Rule 111 Amendment filed on February 15, 2012. Any inconvenience occasioned by the delay in associating the response with the application file is regretted.

/Henry c. Yuen/

Henry c. Yuen
Supervisory patent examiner
TC 3700
571 - 272 - 4856

UNITED STATES PATENT AND TRADEMARK OFFICE

Commissioner for Patents
United States Patent and Trademark Office
P.O. Box 1450
Alexandria, VA 22313-1450
www.uspto.gov

FINNEGAN HENDERSON FARABOW GARRETT & DUNNER, LLP
901 NEW YORK AVENUE, NW
WASHINGTON, DC, 20001-4413

MAILED

SEP 20 2010

OFFICE OF PETITIONS

Patent No. 7,625,866	:	
Gerhardt KUMPE et al	:	
Application No. 10/670,563	:	DECISION ON PETITION
Filed: September 26, 2003	:	
Attorney Docket No. 06478.1494	:	

This is a decision on the petition filed May 6, 2010, under 37 CFR 1.181, which is being treated as a petition under 37 CFR 1.182, requesting issuance of a duplicate letters patent for the above-identified patent.

The petition is **GRANTED**.

A duplicate **ORIGINAL LETTERS PATENT** is enclosed with this decision.

Telephone inquiries related to this decision should be addressed to the undersigned at (571) – 272-0602

Thurman K. Page
Petitions Examiner
Office of Petitions

Enclosure: Original Letters Patent 7,625,866; Corrected Filing Receipt

UNITED STATES PATENT AND TRADEMARK OFFICE

UNITED STATES DEPARTMENT OF COMMERCE
United States Patent and Trademark Office
Address: COMMISSIONER FOR PATENTS
P.O. Box 1450
Alexandria, Virginia 22313-1450
www.uspto.gov

APPLICATION NUMBER	FILING or 371(c) DATE	GRP ART UNIT	FIL FEE REC'D	ATTY.DOCKET.NO	TOT CLAIMS	IND CLAIMS
10/670,563	09/26/2003	1656	1330	06478.1494	18	3

CONFIRMATION NO. 8137

CORRECTED FILING RECEIPT

22852
FINNEGAN, HENDERSON, FARABOW, GARRETT & DUNNER LLP
901 NEW YORK AVENUE, NW
WASHINGTON, DC 20001-4413

OC000000043605313

Date Mailed: 09/20/2010

Receipt is acknowledged of this non-provisional patent application. The application will be taken up for examination in due course. Applicant will be notified as to the results of the examination. Any correspondence concerning the application must include the following identification information: the U.S. APPLICATION NUMBER, FILING DATE, NAME OF APPLICANT, and TITLE OF INVENTION. Fees transmitted by check or draft are subject to collection. Please verify the accuracy of the data presented on this receipt. **If an error is noted on this Filing Receipt, please submit a written request for a Filing Receipt Correction. Please provide a copy of this Filing Receipt with the changes noted thereon. If you received a "Notice to File Missing Parts" for this application, please submit any corrections to this Filing Receipt with your reply to the Notice. When the USPTO processes the reply to the Notice, the USPTO will generate another Filing Receipt incorporating the requested corrections**

Applicant(s)

Gerhardt Kumpe, Wetter, GERMANY;
Manfred Juraschek, Weimar, GERMANY;
Natascha Mayer, Marburg, GERMANY;
Stefan Schulte, Marburg, GERMANY;
Wilfried Wormshabacher, Kirchhain, GERMANY;

Power of Attorney:

Clair Mullen Jr--20348
Kenneth Meyers--25146
Ernest Chapman--25961
Robert Converse Jr--27432
Ronald Bleker--27773
Roger Taylor--28992
Therese Hendricks--30389
John Paul--30413
Thomas Jenkins--30857
David Kelly--30953

Domestic Priority data as claimed by applicant

Foreign Applications

GERMANY 102 46 125.2 10/01/2002

If Required, Foreign Filing License Granted: 12/17/2003

The country code and number of your priority application, to be used for filing abroad under the Paris Convention, is **US 10/670,563**

Projected Publication Date: Not Applicable

Non-Publication Request: No

Early Publication Request: No

Title

CONCENTRATE OF A FACTOR VIII:C-CONTAINING VON WILLEBRAND FACTOR AND THE PROCESS RELATING THERETO

Preliminary Class

514

PROTECTING YOUR INVENTION OUTSIDE THE UNITED STATES

Since the rights granted by a U.S. patent extend only throughout the territory of the United States and have no effect in a foreign country, an inventor who wishes patent protection in another country must apply for a patent in a specific country or in regional patent offices. Applicants may wish to consider the filing of an international application under the Patent Cooperation Treaty (PCT). An international (PCT) application generally has the same effect as a regular national patent application in each PCT-member country. The PCT process **simplifies** the filing of patent applications on the same invention in member countries, but **does not result** in a grant of "an international patent" and does not eliminate the need of applicants to file additional documents and fees in countries where patent protection is desired.

Almost every country has its own patent law, and a person desiring a patent in a particular country must make an application for patent in that country in accordance with its particular laws. Since the laws of many countries differ in various respects from the patent law of the United States, applicants are advised to seek guidance from specific foreign countries to ensure that patent rights are not lost prematurely.

Applicants also are advised that in the case of inventions made in the United States, the Director of the USPTO must issue a license before applicants can apply for a patent in a foreign country. The filing of a U.S. patent application serves as a request for a foreign filing license. The application's filing receipt contains further information and guidance as to the status of applicant's license for foreign filing.

Applicants may wish to consult the USPTO booklet, "General Information Concerning Patents" (specifically, the section entitled "Treaties and Foreign Patents") for more information on timeframes and deadlines for filing foreign patent applications. The guide is available either by contacting the USPTO Contact Center at 800-786-9199, or it can be viewed on the USPTO website at http://www.uspto.gov/web/offices/pac/doc/general/index.html.

For information on preventing theft of your intellectual property (patents, trademarks and copyrights), you may wish to consult the U.S. Government website, http://www.stopfakes.gov. Part of a Department of Commerce initiative, this website includes self-help "toolkits" giving innovators guidance on how to protect intellectual property in specific countries such as China, Korea and Mexico. For questions regarding patent enforcement issues, applicants may call the U.S. Government hotline at 1-866-999-HALT (1-866-999-4158).

LICENSE FOR FOREIGN FILING UNDER

Title 35, United States Code, Section 184

Title 37, Code of Federal Regulations, 5.11 & 5.15

GRANTED

The applicant has been granted a license under 35 U.S.C. 184, if the phrase "IF REQUIRED, FOREIGN FILING LICENSE GRANTED" followed by a date appears on this form. Such licenses are issued in all applications where

the conditions for issuance of a license have been met, regardless of whether or not a license may be required as set forth in 37 CFR 5.15. The scope and limitations of this license are set forth in 37 CFR 5.15(a) unless an earlier license has been issued under 37 CFR 5.15(b). The license is subject to revocation upon written notification. The date indicated is the effective date of the license, unless an earlier license of similar scope has been granted under 37 CFR 5.13 or 5.14.

This license is to be retained by the licensee and may be used at any time on or after the effective date thereof unless it is revoked. This license is automatically transferred to any related applications(s) filed under 37 CFR 1.53(d). This license is not retroactive.

The grant of a license does not in any way lessen the responsibility of a licensee for the security of the subject matter as imposed by any Government contract or the provisions of existing laws relating to espionage and the national security or the export of technical data. Licensees should apprise themselves of current regulations especially with respect to certain countries, of other agencies, particularly the Office of Defense Trade Controls, Department of State (with respect to Arms, Munitions and Implements of War (22 CFR 121-128)); the Bureau of Industry and Security, Department of Commerce (15 CFR parts 730-774); the Office of Foreign AssetsControl, Department of Treasury (31 CFR Parts 500+) and the Department of Energy.

NOT GRANTED

No license under 35 U.S.C. 184 has been granted at this time, if the phrase "IF REQUIRED, FOREIGN FILING LICENSE GRANTED" DOES NOT appear on this form. Applicant may still petition for a license under 37 CFR 5.12, if a license is desired before the expiration of 6 months from the filing date of the application. If 6 months has lapsed from the filing date of this application and the licensee has not received any indication of a secrecy order under 35 U.S.C. 181, the licensee may foreign file the application pursuant to 37 CFR 5.15(b).

UNITED STATES PATENT AND TRADEMARK OFFICE

Commissioner for Patents
United States Patent and Trademark Office
P.O. Box 1450
Alexandria, VA 22313-1450
www.uspto.gov

BLANK ROME LLP
ONE LOGAN SQUARE
130 NORTH 18TH STREET
PHILADELPHIA PA 19103

MAILED
FEB 14 2011
OFFICE OF PETITIONS

In re Application of	:	
Donald A. Schon et al	:	
Application No. 10/670,861	:	DECISION GRANTING PETITION
Filed: September 24, 2003	:	UNDER 37 CFR 1.313(c)(2)
Attorney Docket No. 125708-00115	:	

This is a decision on the petition under 37 CFR 1.313(c)(2), filed February 11, 2011, to withdraw the above-identified application from issue after payment of the issue fee.

The petition is **GRANTED**.

The above-identified application is withdrawn from issue for consideration of a submission under 37 CFR 1.114 (request for continued examination). *See* 37 CFR 1.313(c)(2).

Petitioner is advised that the issue fee paid on January 25, 2011 cannot be refunded. If, however, this application is again allowed, petitioner may request that it be applied towards the issue fee required by the new Notice of Allowance.[1]

Telephone inquiries should be directed to the undersigned at (571) 272-3208.

This application is being referred to Technology Center AU 3761 for processing of the request for continued examination under 37 CFR 1.114 and for consideration of the concurrently filed IDS.

/Karen Creasy/
Karen Creasy
Petitions Examiner
Office of Petitions

---

[1] *The request to apply the issue fee to the new Notice may be satisfied by completing and returning the new Part B – Fee(s) Transmittal Form (along with any balance due at the time of submission). Petitioner is advised that the Issue Fee Transmittal Form* ***must*** *be completed and timely submitted to avoid abandonment of the application.*

UNITED STATES PATENT AND TRADEMARK OFFICE

Commissioner for Patents
United States Patent and Trademark Office
P.O. Box 1450
Alexandria, VA 22313-1450
www.uspto.gov

THEODORE J. CIAMILLO
561 STAGHORN TRAIL
NICHOLSON GA 30565

MAILED
FEB 23 2011
OFFICE OF PETITIONS

In re Patent No. 7,000,739	:	
Issued: February 21, 2006	:	
Application No. 10/670,895	:	DECISION ON PETITION
Filed: September 24, 2003	:	
Attorney Docket No. 141620.00002	:	

This is a decision on the petition under 37 CFR 1.378(c), filed January 12, 2011, to accept the delayed payment of a maintenance fee for the above-identified patent.

The petition is **GRANTED**.

This patent expired on February 22, 2010 for failure to pay the three and one-half year maintenance fee. Since this petition was submitted within twenty-four months after the six-month grace period provided in 37 CFR 1.362(e), the petition was timely filed under the provisions of 37 CFR 1.378(c).

The maintenance fee is hereby accepted and the above-identified patent is reinstated as of the mail date of this decision.

It is not apparent whether the statement of unintentional delay was signed by a person who would have been in a position of knowing that the delay in filing a timely response was unintentional. Nevertheless, in accordance with 37 CFR 10.18, the statement is accepted as constituting a certification of unintentional delay. However, in the event that petitioner has no knowledge that the delay in paying the maintenance fee was in fact unintentional, petitioner must make such an inquiry to ascertain that, in fact the delay was unintentional. If petitioner discovers that the delay in paying the maintenance fee was intentional, petitioner must so notify the Office.

Further, it is not apparent whether the person signing the instant petition was ever given a power of attorney or authorization of agent in the above-identified patent. In accordance with 37 CFR 1.34(a), the signature appearing on the petition shall constitute a representation to the United States Patent and Trademark Office that he/she is authorized to represent the particular party in whose behalf he/she acts.

Additionally, the file indicates a change of address has been submitted and accepted, although the address given on the petition differs from the address of record. Patentee should note that the change of correspondence address does not affect the fee address. Therefore, if patentee desires to receive future correspondence, which **may** be mailed regarding maintenance fees for the above-identified patent, the "fee address" and/or "customer number" forms should be submitted.

A courtesy copy of this decision is being mailed to the address given on the petition; however, the Office will mail all future correspondence solely to the address of record.

Telephone inquiries concerning this decision should be directed to the undersigned at (571) 272-7751.

Joan Olszewski

Joan Olszewski
Petitions Examiner
Office of Petitions

cc: Lisa Serdynski
1333 N Kingsbury Street
4th Floor
Chicago, IL 60642

PTO/SB/66 (03-09)
Approved for use through 03/31/2012. OMB 0651-0016
U.S. Patent and Trademark Office: U.S. DEPARTMENT OF COMMERCE
Under the Paperwork Reduction Act of 1995, no persons are required to respond to a collection of information unless it displays valid OMB control number.

PETITION TO ACCEPT UNINTENTIONALLY DELAYED PAYMENT OF MAINTENANCE FEE IN AN EXPIRED PATENT (37 CFR 1.378(c))

Patent Number	Issue Date (YYYY-MM-DD)	Application Number	Filing Date (YYYY-MM-DD)	Docket Number (if applicable)
6927328	2005-08-09	10670939	2003-09-25	22247.005

CAUTION: Maintenance fee (and surcharge, if any) payment must correctly identify: (1) the patent number and (2) the application number of the actual U.S. application leading to issuance of that patent to ensure the fee(s) is/are associated with the correct patent. 37 CFR 1.366(c) and (d).

SMALL ENTITY
☒ Patentee claims, or has previously claimed, small entity status. See 37 CFR 1.27.

LOSS OF ENTITLEMENT TO SMALL ENTITY STATUS
☐ Patentee is no longer entitled to small entity status. See 37 CFR 1.27(g)

NOT Small Entity		Small Entity	
Fee	Code	Fee	Code
○ 3 ½ year	(1551)	◉ 3 ½ year	(2551)
○ 7 ½ year	(1552)	○ 7 ½ year	(2552)
○ 11 ½ year	(1553)	○ 11 ½ year	(2553)

SURCHARGE
The surcharge required by 37 CFR 1.20(i)(2) (Fee Code 1558) must be paid as a condition of accepting unintentionally delayed payment of the maintenance fee.

MAINTENANCE FEE (37 CFR 1.20(e)-(g))
The appropriate maintenance fee must be submitted with this petition.

STATEMENT
THE UNDERSIGNED CERTIFIES THAT THE DELAY IN PAYMENT OF THE MAINTENANCE FEE TO THIS PATENT WAS UNINTENTIONAL

PETITIONER(S) REQUEST THAT THE DELAYED PAYMENT OF THE MAINTENANCE FEE BE ACCEPTED AND THE PATENT REINSTATED

THIS PORTION MUST BE COMPLETED BY THE SIGNATORY OR SIGNATORIES

37 CFR 1.378(d) states: "Any petition under this section must be signed by an attorney or agent registered to practice before the Patent and Trademark Office, or by the patentee, the assignee, or other party in interest."

I certify, in accordance with 37 CFR 1.4(d)(4) that I am

◉ An attorney or agent registered to practice before the Patent and Trademark Office

○ A sole patentee

○ A joint patentee; I certify that I am authorized to sign this submission on behalf of all the other patentees.

○ A joint patentee; all of whom are signing this e-petition

○ The assignee of record of the entire interest

Under the Paperwork Reduction Act of 1995, no persons are required to respond to a collection of information unless it displays valid OMB control number.

Patent Practitioner			
A signature of the applicant or representative is required in accordance with 37 CFR 1.33 and 10.18. Please see 37 CFR 1.4(d) for the form of the signature			
Signature	/Charles D. Gunter, Jr./	Date (YYYY-MM-DD)	2010-09-07
Name	Charles D. Gunter, JR.	Registration Number	29386

This collection of information is required by 37 CFR 1.378(c). The information is required to obtain or retain a benefit by the public which is to file (and by the USPTO to process) an application. Confidentiality is governed by 35 U.S.C. 122 and 37 CFR 1.11 and 1.14. This collection is estimated to take 1 hour to complete, including gathering, preparing, and submitting the completed application form to the USPTO. Time will vary depending upon the individual case. Any comments on the amount of time you require to complete this form and/ or suggestions for reducing this burden, should be sent to the Chief Information Officer, U.S. Patent and Trademark Office, U.S. Department of Commerce, P.O. Box 1450, Alexandria, VA 22313-1450. DO NOT SEND FEES OR COMPLETED FORMS TO THIS ADDRESS. **This form can only be used when in conjunction with EFS-Web. If this form is mailed to the USPTO, it may cause delays in reinstating the patent.**

Privacy Act Statement

The Privacy Act of 1974 (P.L. 93-579) requires that you be given certain information in connection with your submission of the attached form related to a patent application or patent. Accordingly, pursuant to the requirements of the Act, please be advised that: (1) the general authority for the collection of this information is 35 U.S.C. 2(b)(2); (2) furnishing of the information solicited is voluntary; and (3) the principal purpose for which the information is used by the U.S. Patent and Trademark Office is to process and/or examine your submission related to a patent application or patent. If you do not furnish the requested information, the U.S. Patent and Trademark Office may not be able to process and/or examine your submission, which may result in termination of proceedings or abandonment of the application or expiration of the patent.

The information provided by you in this form will be subject to the following routine uses:

1. The information on this form will be treated confidentially to the extent allowed under the Freedom of Information Act (5 U.S.C. 552) and the Privacy Act (5 U.S.C. 552a). Records from this system of records may be disclosed to the Department of Justice to determine whether the Freedom of Information Act requires disclosure of these records.

2. A record from this system of records may be disclosed, as a routine use, in the course of presenting evidence to a court, magistrate, or administrative tribunal, including disclosures to opposing counsel in the course of settlement negotiations.

3. A record in this system of records may be disclosed, as a routine use, to a Member of Congress submitting a request involving an individual, to whom the record pertains, when the individual has requested assistance from the Member with respect to the subject matter of the record.

4. A record in this system of records may be disclosed, as a routine use, to a contractor of the Agency having need for the information in order to perform a contract. Recipients of information shall be required to comply with the requirements of the Privacy Act of 1974, as amended, pursuant to 5 U.S.C. 552a(m).

5. A record related to an International Application filed under the Patent Cooperation Treaty in this system of records may be disclosed, as a routine use, to the International Bureau of the World Intellectual Property Organization, pursuant to the Patent Cooperation Treaty.

6. A record in this system of records may be disclosed, as a routine use, to another federal agency for purposes of National Security review (35 U.S.C. 181) and for review pursuant to the Atomic Energy Act (42 U.S.C. 218(c)).

7. A record from this system of records may be disclosed, as a routine use, to the Administrator, General Services, or his/her designee, during an inspection of records conducted by GSA as part of that agency's responsibility to recommend improvements in records management practices and programs, under authority of 44 U.S.C. 2904 and 2906. Such disclosure shall be made in accordance with the GSA regulations governing inspection of records for this purpose, and any other relevant (i.e., GSA or Commerce) directive. Such disclosure shall not be used to make determinations about individuals.

8. A record from this system of records may be disclosed, as a routine use, to the public after either publication of the application pursuant to 35 U.S.C. 122(b) or issuance of a patent pursuant to 35 U.S.C. 151. Further, a record may be disclosed, subject to the limitations of 37 CFR 1.14, as a routine use, to the public if the record was filed in an application which became abandoned or in which the proceedings were terminated and which application is referenced by either a published application, an application open to public inspections or an issued patent.

9. A record from this system of records may be disclosed, as a routine use, to a Federal, State, or local law enforcement agency, if the USPTO becomes aware of a violation or potential violation of law or regulation.

UNITED STATES PATENT AND TRADEMARK OFFICE

Commissioner for Patents
United States Patent and Trademark Office
P.O. Box 1450
Alexandria, VA 22313-1450
www.uspto.gov

In re Patent No. 6927328
Issue Date: August 9,2005
Application No. 10670939
Filed: September 25,2003
Attorney Docket No. ANDG 102

:
:DECISION GRANTING PETITION
:UNDER 37 CFR 1.378(c)
:

This is a decision on the electronic petition, filed September 7,2010 ,under 37 CFR 1.378(c) to accept the unintentionally delayed payment of the 3.5 year maintenance fee for the above-identified patent.

The petition is **GRANTED**.

The maintenance fee is accepted, and the above-identified patent reinstated as of September 7,2010 . This decision also constitutes notice that the fee has been accepted. An electronic copy of the petition and this decision has been created as an entry in the Image File Wrapper. Nevertheless, petitioner should print and retain an independent copy.

Telephone inquiries related to this electronic decision should be directed to the Electronic Business Center at 1-866-217-9197.

UNITED STATES PATENT AND TRADEMARK OFFICE

Commissioner for Patents
United States Patent and Trademark Office
P.O. Box 1450
Alexandria, VA 22313-1450
www.uspto.gov

JAY M. BROWN
6409 FAYETTEVILLE ROAD
SUITE 120-306
DURHAM, NC 27713

MAILED
APR 07 2011
OFFICE OF PETITIONS

In re Patent No. 7,122,828	:	
Issue Date: October 17, 2006	:	
Application No.10/671,303	:	DECISION ON PETITION
Filed: September 24, 2003	:	
Attorney Docket No. LU05018USU	:	

This is a decision on the petition under 37 CFR 1.378(c), originally filed November 19, 2010 and resubmitted February 15, 2011 , to accept the unintentionally delayed payment of a maintenance fee for the above-identified patent.

The petition is **GRANTED**.

This patent expired on October 17, 2010 for failure to pay the three and one-half year maintenance fee. Since this petition was submitted within twenty-four months after the six-month grace period provided in 37 CFR 1.362(e), the petition was timely filed under the provisions of 37 CFR 1.378(c).

The maintenance fee is hereby accepted and the above-identified patent is reinstated as of the mail date of this decision.

The power of attorney filed by the assignee with the petition on November 19, 2010 has been accepted and made of record.

Telephone inquiries concerning this decision should be directed to the undersigned at (571) 272-4231.

The patent file is being forwarded to Files Repository.

Michelle R. Eason
Paralegal Specialist
Office of Petitions

UNITED STATES PATENT AND TRADEMARK OFFICE

Commissioner for Patents
United States Patent and Trademark Office
P.O. Box 1450
Alexandria, VA 22313-1450
www.uspto.gov

Paper No.

FOLEY & LARDNER LLP
150 EAST GILMAN STREET
P.O. BOX 1497
MADISON WI 53701-1497

MAILED

JAN 11 2011

OFFICE OF PETITIONS

In re Application of	:	
Borran et al.	:	
Application No. 10/671,346	:	ON APPLICATION FOR
Filed: 09/24/2003	:	PATENT TERM ADJUSTMENT
Atty Docket No.	:	
088245-0108	:	

This is in response to the "REQUEST FOR RECONSIDERATION OF PATENT TERM ADJUSTMENT FOR PATENT APPLICATION UNDER 37 C.F.R. §1.705(b)," filed on November 3, 2010. Applicants assert that the correct patent term adjustment is 209 days rather than 0 days as indicated in the Determination of Patent Term Adjustment Under 35 U.S.C. § 154(b) mailed with the notice of allowance. Applicants assert entitlement to the additional patent term adjustment solely on the basis that the patent will issue more than 3 years after the filing date.

The instant application for patent term adjustment requests reconsideration of the patent term adjustment as it relates to the Office's failure to issue the patent within 3 years of the filing date, the application for patent term adjustment under 37 CFR 1.705(b) is **DISMISSED as PREMATURE**.

Knowledge of the actual date the patent issues is required to calculate the amount, if any, of additional patent term patentee is entitled to for Office failure to issue the patent within 3 years. See § 1.702(b). (This is true even where a request for continued examination (RCE) was filed). The computer will not undertake the § 1.702(b) calculation until the actual date of issuance of the patent has been determined. Likewise, the computer will not calculate any further Office delay under § 1.702(a)(4) or applicant delay under § 1.704(c)(10) until the actual date of issuance of the patent has been determined. As

such, the Office can not make a determination on the correctness of the patent term adjustment until the patent has issued. Requesting reconsideration of the patent term adjustment to be indicated on the patent under 37 CFR 1.705(b) based on the initial determination of patent term adjustment and a projected issuance date of the patent (or even the filing date of the request for continued examination) is premature. Accordingly, it is appropriate to dismiss as premature such a request.

Rather than file an application for patent term adjustment under 37 CFR 1.705(b) contesting the 37 CFR 1.702(b) calculation at the time of the mailing of the notice of allowance, applicants are advised that they may wait until the time of the issuance of the patent and file a request for reconsideration of the patent term adjustment pursuant to 37 CFR 1.705(d). As the USPTO does not calculate the amount of time earned pursuant to 37 CFR 1.702(b) until the time of the issuance of the patent, the Office will consider any request for reconsideration of the patent term adjustment due to an error in the calculation of 37 CFR 1.702(b) to be timely if the request for reconsideration is filed within two months of the issuance of the patent. However, as to all other bases for contesting the initial determination of patent term adjustment received with the notice of allowance, applicant must timely file an application for patent term adjustment prior to the payment of the issue fee[1].

The Office acknowledges submission of the $200.00 fee set forth in 37 CFR 1.18(e). No additional fees are required.

Any request for reconsideration of the patent term adjustment indicated on the patent must be timely filed within 2 months after issuance pursuant to 37 CFR 1.705(d) and must include payment of the required fee under 37 CFR 1.18(e).

---

[1] For example, if applicant disputes both the calculation of patent term adjustment under 37 CFR 1.702(a)(1) for Office failure to mail a first Office action or notice of allowance not later than fourteen months after the date on which the application was filed and under 37 CFR 1.702(b) for Office failure to issue a patent within three years of the actual filing date of the application, then applicant must still timely file an application for patent term adjustment prior to the payment of the issue fee to contest the calculation of Office delay in issuing a first Office action or notice of allowance. See 37 CFR 1.705(b) and 35 U.S.C. 154(b)(3)(B). A dispute as to the calculation of the §1.702(a)(1) period raised on request for reconsideration of patent term adjustment under 37 CFR 1.705(d) will be dismissed as untimely filed.

The Office of Data Management has been advised of this decision. This application is being referred to the Office of Data Management for issuance of the patent.

Telephone inquiries specific to this decision should be directed to the undersigned at (571) 272-3231.

D Wood

Douglas I. Wood
Senior Petitions Attorney
Office of Petitions

UNITED STATES PATENT AND TRADEMARK OFFICE

Commissioner for Patents
United States Patent and Trademark Office
P.O. Box 1450
Alexandria, VA 22313-1450
www.uspto.gov

MAILED

DEC 10 2010

OFFICE OF PETITIONS

DAVID ANDREW D'ZMURA
P.O. BOX 1845
BORREGO SPRINGS, CA 92004-1845

In re Patent of D'Zmura	:	
Patent No. 6,974,325	:	
Issue Date: December 13, 2005	:	Decision on Petition
Application No. 10/671,415	:	
Filing Date: September 25, 2003	:	
For: Astrological Charts and Plotting Devices	:	

This a decision in response to the petition filed June 25, 2010, which is being treated as a petition under 37 C.F.R. § 1.182 requesting issuance of duplicate letters patent. The petition is also being treated as a petition under 37 C.F.R. § 1.183.

The petition under 37 C.F.R. § 1.182 is **dismissed**.

The petition under 37 C.F.R. § 1.183 is **dismissed**.

Petitioner filed a single petition on June 25, 2010. The petition requests the Office:

1. Issue duplicate letters patent for all of Petitioner's patents,
2. Withdraw the holding of abandonment for all of Petitioner's abandoned divisional and provisional applications, and
3. "Advise the US Dept. Commerce, US Treasury and Executive Cabinet to License ... my Intangible Wealth."

When a party wishes to address an issue involving more than one application or patent, a separate petition must be filed in each of the applications or patents. As a courtesy, the Office has taken steps resulting in a copy of the petition being placed in each of the patent files. However, if Petitioner wishes to request reconsideration of more than one of the decisions, a separate request must be filed for each patent.

Duplicate Letters Patent

The Petition Under 37 C.F.R. § 1.182

Duplicate letters patent may be obtained by filing a petition under 37 C.F.R. § 1.182. Therefore, the Office has treated the petition as a petition under 37 C.F.R. § 1.182.

A petition under 37 C.F.R. § 1.182 for duplicate letters patent must:

(1) Establish the original letters patent was never received at the address of record, or
(2) Include a petition fee of $400.

The petition does not assert Petitioner never received the original letters patent and Petitioner has not supplied the $400 fee. Therefore, the petition under 37 C.F.R. § 1.182 is dismissed.

The Petition Under 37 C.F.R. § 1.183

Petitioner appears to be seeking waiver of the requirement to pay the $400 fee for the petition under 37 C.F.R. § 1.182. Therefore, the Office has treated the petition, in part, as a petition under 37 C.F.R. § 1.183 requesting waiver of the requirement in 37 C.F.R. § 1.182 for any petition under that section to be accompanied by the $400 fee set forth in 37 C.F.R. § 1.17(f).

37 C.F.R. § 1.183 states, with emphasis added,

> In an extraordinary situation, when justice requires, any requirement of the regulations in this part which is not a requirement of the statutes may be suspended or waived by the Director or the Director's designee.... Any petition under this section *must be* accompanied by the *petition fee set forth in § 1.17(f).*

A petition under 37 C.F.R. § 1.183 must be accompanied by payment of a $400 fee, which a party can argue should be waived and refunded in the petition. Petitioner has not submitted the $400 fee. Therefore, the petition under 37 C.F.R. § 1.183 is dismissed.

As a courtesy, the Office will briefly discuss the requirements of 37 C.F.R. § 1.183 and some of the facts in this case.

In order for a regulation to be waived, justice must require the waiver of the regulation. Justice does not require waiver of a regulation when enforcement of the regulation will not impair the legal rights of a party. Patents are intangible assets and patent rights exist independently of any letters patent. In other words, a copy of a patent grant only has symbolic value. Therefore, the loss of letters patent and the failure to receive duplicate letters patent does *not* impair the legal rights of any party.

Even if a party could be harmed by not possessing any copies of a patent, such harm could be remedied without a need for issuance of duplicate letters patent. For example, a party can obtain a certified copy of a patent for $25 and an uncertified copy of a patent for $3. Additional information concerning ordering certified or uncertified copies of a patent can be obtained by calling 1-800-972-6382. In addition to ordering copies of patents from the Office, one can find and print copies of patents from multiple sites on the internet.

The Abandoned Status of Multiple Applications

The petition requests the Office withdraw the holding of abandonment for all of Petitioner's abandoned divisional and provisional applications.

Based on Office records, Petitioner's divisional applications appear to consist of Application No. 10/509,085 and Application Nos. 10/681,356 to 10/681,367. Petitioner appears to have filed about 16 provisional applications.

The Office will not consider the request to withdraw the holding of abandonment in the divisional applications and the provisional applications, because petitions to withdraw the holding of abandonment do not appear to have been in any of the cases.

If petitioner wishes to argue the holding of abandonment should be withdrawn for a specific application, a petition to withdrawn the holding of abandonment must be filed in that specific application.

If Petitioner wishes to argue the holding of abandonment should be withdrawn for multiple applications, separate petitions must be filed in each application.

Request for the Office to Advise Agencies to License Patent

In general, each federal agency within the United States makes the agency's own decisions with respect to the purchase and/or licensing of patents and the United States Patent and Trademark Office does not have the authority to force other agencies to license a patent. Therefore, the Office is unable to advise the Department of Commerce or any other agency to license the patent.

Any request for reconsideration must be submitted within TWO (2) MONTHS from the mail date of this decision. Extensions of time under 37 CFR 1.136(a) are NOT permitted. The reconsideration request should include a cover letter entitled "Renewed Petition."

Further correspondence with respect to this matter may be submitted as follows:

By mail: Mail Stop Petition
Commissioner for Patents
P.O. Box 1450
Alexandria, VA 22313-1450

By facsimile: (571) 273-8300
Attn: Office of Petitions

Telephone inquiries regarding this communication should be directed to Petitions Attorney Steven Brantley at (571) 272-3203.

Charles Steven Brantley
Senior Petitions Attorney
Office of Petitions

UNITED STATES PATENT AND TRADEMARK OFFICE

Commissioner for Patents
United States Patent and Trademark Office
P.O. Box 1450
Alexandria, VA 22313-1450
www.uspto.gov

MAILED

MAR 24 2011

OFFICE OF PETITIONS

DAVID ANDREW D'ZMURA
P.O. BOX 1845
BORREGO SPRINGS, CA 92004-1845

In re Patent of D'Zmura	:	
Patent No. 6,974,325	:	
Issue Date: December 13, 2005	:	Decision on Petition
Application No. 10/671,415	:	
Filing Date: September 25, 2003	:	
For: Astrological Charts and Plotting Devices	:	

This a decision in response to the petition filed February 7, 2011, which is being treated as a petition under 37 C.F.R. § 1.181.

The petition is **dismissed**.

Background

A single petition was filed on June 25, 2010. The petition pertained to the following five patents:

1. Patent No. 7,083,415,
2. Patent No. 6,974,325,
3. Patent No. 7,236,952,
4. Patent No. 6,776,618, and
5. Patent No. 7,195,488.

As a courtesy, the Office placed a copy of the petition in the file for each of the five patents.

The first page of the June 25, 2010 petition included the language, "Petition to the Director, under 1.181(a) Due to No Fault of My Own."

The June 25, 2010 petition requested the Office:

1. Issue duplicate letters patent for all of Petitioner's patents,
2. Withdraw the holding of abandonment for all of Petitioner's abandoned divisional and provisional applications, and
3. "Advise the US Dept. Commerce, US Treasury and Executive Cabinet to License ... my Intangible Wealth."

The Office believed Petitioner's requests for issuance of duplicate letters patent without requiring payment of any fee fell within the scope of 37 C.F.R. §§ 1.182 and 1.183. As a result, the Office treated the petition as a petition under 37 C.F.R. § 1.182 and a petition under 37 C.F.R. § 1.183.

On December 10, 2010, the Office mailed decisions dismissing the petitions. A separate decision was mailed for each of the five patents.

Although portions of the instant petition are not legible, the petition appears to be requesting the Office consider Petitioner's request for duplicate letters patent under 37 C.F.R. § 1.181(a).

Discussion

Pursuant to 37 C.F.R. § 1.181(a)(3), a party may filed a petition "[t]o invoke the supervisory authority of the Director in appropriate circumstances." In essence, the petition allows one, in appropriate circumstances, to have the Office review the propriety of an action taken by an Office employee.

Petitioner is not seeking for the Office to review the propriety of an action taken by an Office employee. Instead, Petitioner is seeking to have the Office issue duplicate letters patent. Therefore, relief is not warranted under 37 C.F.R. § 1.181(a)(3).

The prior decision informed Petitioner a petition under 37 C.F.R. § 1.182 must be filed in order to obtain duplicate letters patent. The decision also stated such a petition must either establish the original letters patent were never received or include a $400 petition fee.

Petitioner has not asserted the original letters patent were never received or submitted the required $400 petition fee. Therefore, the request for issuance of duplicate letters patent is dismissed.

The prior decision indicated Petitioner should *not* file a single petition pertaining to multiple patents in the future. Specifically, the decision stated, with emphasis in the original,

> When a party wishes to address an issue involving more than one application or patent, a separate petition must be filed in each of the applications or patents. As a courtesy, the Office has taken steps resulting in a copy of the petition being placed in each of the patent files. However, if Petitioner wishes to request reconsideration of more than one of the decisions, a separate request must be filed for each patent.

Petitioner appears to have filed one copy of the instant petition even though it pertains to five patents. As a courtesy, the Office has placed copies of the petition into each of the five files. However, if Petitioner files a request for reconsideration of the instant decision, Petitioner must file a separate copy of the request for each of the patents.

As discussed in the prior decision, the requirement for separate petitions to be filed different cases also applies to petitions pertaining to applications which have not issued as a patent. For

example, if Petitioner wishes to argue the holding of abandonment should be withdrawn for more than one of Petitioner's applications, a separate petition to withdraw the holding of abandonment must be filed in each application.

The Office strongly recommends any documents Petitioner files with the Office in the future be accompanied by a cover letter clearly and prominently identifying, at a minimum, the application number, the application's filing date, and the title of the invention. Such a cover letter will help the Office ensure the documents are matched with the proper file. A copy of a form which may be used as the cover letter is enclosed.

Further correspondence with respect to this matter may be submitted as follows:

By mail: Mail Stop Petition
Commissioner for Patents
P.O. Box 1450
Alexandria, VA 22313-1450

By facsimile: (571) 273-8300
Attn: Office of Petitions

Telephone inquiries regarding this communication should be directed to Petitions Attorney Steven Brantley at (571) 272-3203.

Charles Steven Brantley
Senior Petitions Attorney
Office of Petitions

Enclosure: Form PTO/SB/21

SPE RESPONSE FOR CERTIFICATE OF CORRECTION

Paper No.:20101210

DATE : December 04, 2010

TO SPE OF : ART UNIT 3657

SUBJECT : Request for Certificate of Correction on Patent No.: 7552803

A response is requested with respect to the accompanying request for a certificate of correction.

Please complete this form and return with file, within **7** days to:
Certificates of Correction Branch - ST (South Tower) 9A22
Palm location **7590** - Tel. No. (703) 305-8309

With respect to the change(s) requested, correcting Office and/or Applicant's errors, should the patent read as shown in the certificate of correction? No new matter should be introduced, nor should the scope or meaning of the claims be changed.

Thank You For Your Assistance **Certificates of Correction Branch**

The request for issuing the above-identified correction(s) is hereby:

Note your decision on the appropriated box.

☒ **Approved** All changes apply.

☐ **Approved in Part** Specify below which changes **do not** apply.

☐ **Denied** State the reasons for denial below.

Comments:

/ROBERT A SICONOLFI/
Supervisory Patent Examiner.Art Unit 3657

UNITED STATES PATENT AND TRADEMARK OFFICE

Commissioner for Patents
United States Patent and Trademark Office
P.O. Box 1450
Alexandria, VA 22313-1450
www.uspto.gov

PHILIP S. JOHNSON
JOHNSON & JOHNSON
ONE JOHNSON & JOHNSON PLAZA
NEW BRUNSWICK NJ 08933-7003

MAILED

AUG 17 2010

OFFICE OF PETITIONS

In re Application
Michael C. Jones
Application No. 10/671,820
Filed: September 26, 2003
Attorney Docket No. 5086

: DECISION ON APPLICATION
: FOR PATENT TERM ADJUSTMENT

This is in response to the REQUEST FOR RECONSIDERATION OF PATENT TERM ADJUSTMENT UNDER 37 C.F.R. 1.705(b) WITHIN THREE MONTHS OF RECEIPT OF THE NOTICE OF ALLOWANCE filed February 10, 2010. Applicant requests that the determination of patent term adjustment be corrected from 472 to 594 days. Applicant requests this correction in part on the basis that the Office will take in excess of three years to issue this patent and in light of the recent court decision in Wyeth v. Dudas, No. 07-1492 (D.D.C. September 30, 2008).[1]

As the instant application for patent term adjustment requests reconsideration of the patent term adjustment as it relates to the Office's failure to issue the patent within three years of the filing date, the application for patent term adjustment under 37 CFR 1.705(b) is **DISMISSED as PREMATURE**.

Knowledge of the actual date the patent issues is required to calculate the amount, if any, of additional patent term patentees are entitled to for Office failure to issue the patent within three years. See 37 CFR 1.702(b). (This is true even where a request for continued examination (RCE) was filed). The computer will not undertake the § 1.702(b) calculation until the actual date of issuance of the patent has been determined. Likewise, the computer will not calculate any further Office delay under 37 CFR 1.702(a)(4) or applicant delay under 37 CFR 1.704(c)(10) until the actual date of issuance of the patent has been determined. As such, the Office cannot make a determination on the patent term adjustment relating to those provisions until the patent has issued.
Requesting reconsideration of the patent term adjustment to be indicated on the patent under 37 CFR 1.705(b) based on the initial determination of patent term adjustment and a projected issuance date of the patent (or even the filing date of the request for continued examination) is premature. Accordingly, it is appropriate to dismiss such a request as premature.

[1]Reconsidered in light of the Court of Appeals for the Federal Circuit's decision in *Wyeth v. Kappos*, 2009-1120 (Fed. Cir. 1-7-2010).

Rather than file an application for patent term adjustment under 37 CFR 1.705(b) contesting the 37 CFR 1.702(b) calculation at the time of the mailing of the notice of allowance, applicants are advised that they may wait until the time of the issuance of the patent and file a request for reconsideration of the patent term adjustment pursuant to 37 CFR 1.705(d). As the USPTO does not calculate the amount of time earned pursuant to 37 CFR 1.702(b) until the time of the issuance of the patent, the Office will consider any request for reconsideration of the patent term adjustment due to an error in the calculation of 37 CFR 1.702(b) to be timely if the request for reconsideration is filed within two months of the issuance of the patent. However, as to all other bases for contesting the initial determination of patent term adjustment received with the notice of allowance, applicants must timely file an application for patent term adjustment prior to the payment of the issue fee.[2]

To the extent that applicant otherwise requests reconsideration of the patent term adjustment at the time of the mailing of the notice of allowance, the application for patent term adjustment is **DISMISSED**.

Applicants argument fails to include 3 days of Office delay from November 10, 2008 to November 13, 2008 pursuant to 37 CFR 1.702(a)(2) and thus the total Office delay at the time the Notice of Allowance was mailed was 475 (453 + 3 +19) and the total patent term adjustment was 472 days (475 "A" delay minus 3 days Applicant delay).

Any request for reconsideration of the patent term adjustment indicated on the patent must be timely filed within two months after issuance pursuant to 37 CFR 1.705(d) and must include payment of the required fee under 37 CFR 1.18(e).

The Office of Data Management has been advised of this decision. This application is being referred to the Office of Data Management for issuance of the patent.

Telephone inquiries specific to this decision should be directed to Senior Petitions Attorney Patricia Faison-Ball at (571) 272-3212.

Anthony Knight
Director
Office of Petitions

---

[2] For example, if applicants dispute both the calculation of patent term adjustment under 37 CFR 1.702(a)(1) for Office failure to mail a first Office action or notice of allowance not later than fourteen months after the date on which the application was filed, and under 37 CFR 1.702(b) for Office failure to issue a patent within three years of the actual filing date of the application, then applicants must still timely file an application for patent term adjustment prior to the payment of the issue fee to contest the calculation of Office delay in issuing a first Office action or notice of allowance. See 37 CFR 1.705(b) and 35 U.S.C. 154(b)(3)(B). A dispute as to the calculation of the § 1.702(a)(1) period raised on request for reconsideration of patent term adjustment under 37 CFR 1.705(d) will be dismissed as untimely filed.

PTO/SB/66 (03-09)
Approved for use through 03/31/2012. OMB 0651-0016
U.S. Patent and Trademark Office: U.S. DEPARTMENT OF COMMERCE
Under the Paperwork Reduction Act of 1995, no persons are required to respond to a collection of information unless it displays valid OMB control number.

PETITION TO ACCEPT UNINTENTIONALLY DELAYED PAYMENT OF MAINTENANCE FEE IN AN EXPIRED PATENT (37 CFR 1.378(c))

Patent Number	Issue Date (YYYY-MM-DD)	Application Number	Filing Date (YYYY-MM-DD)	Docket Number (if applicable)
6,894,035	2005-05-17	10/672,072	2003-09-25	2035B(204245)

CAUTION: Maintenance fee (and surcharge, if any) payment must correctly identify: (1) the patent number and (2) the application number of the actual U.S. application leading to issuance of that patent to ensure the fee(s) is/are associated with the correct patent. 37 CFR 1.366(c) and (d).

SMALL ENTITY
☒ Patentee claims, or has previously claimed, small entity status. See 37 CFR 1.27.

LOSS OF ENTITLEMENT TO SMALL ENTITY STATUS
☐ Patentee is no longer entitled to small entity status. See 37 CFR 1.27(g)

NOT Small Entity		Small Entity	
Fee	Code	Fee	Code
○ 3 ½ year	(1551)	◉ 3 ½ year	(2551)
○ 7 ½ year	(1552)	○ 7 ½ year	(2552)
○ 11 ½ year	(1553)	○ 11 ½ year	(2553)

SURCHARGE
The surcharge required by 37 CFR 1.20(i)(2) (Fee Code 1558) must be paid as a condition of accepting unintentionally delayed payment of the maintenance fee.

MAINTENANCE FEE (37 CFR 1.20(e)-(g))
The appropriate maintenance fee must be submitted with this petition.

STATEMENT
THE UNDERSIGNED CERTIFIES THAT THE DELAY IN PAYMENT OF THE MAINTENANCE FEE TO THIS PATENT WAS UNINTENTIONAL

PETITIONER(S) REQUEST THAT THE DELAYED PAYMENT OF THE MAINTENANCE FEE BE ACCEPTED AND THE PATENT REINSTATED

THIS PORTION MUST BE COMPLETED BY THE SIGNATORY OR SIGNATORIES

37 CFR 1.378(d) states: "Any petition under this section must be signed by an attorney or agent registered to practice before the Patent and Trademark Office, or by the patentee, the assignee, or other party in interest."

I certify, in accordance with 37 CFR 1.4(d)(4) that I am

◉ An attorney or agent registered to practice before the Patent and Trademark Office

○ A sole patentee

○ A joint patentee; I certify that I am authorized to sign this submission on behalf of all the other patentees.

○ A joint patentee; all of whom are signing this e-petition

○ The assignee of record of the entire interest

Under the Paperwork Reduction Act of 1995, no persons are required to respond to a collection of information unless it displays valid OMB control number.

Patent Practitioner			
A signature of the applicant or representative is required in accordance with 37 CFR 1.33 and 10.18. Please see 37 CFR 1.4(d) for the form of the signature			
Signature	/Ralph Loren/	Date (YYYY-MM-DD)	2010-11-03
Name	Ralph Loren, Esq.	Registration Number	29325

This collection of information is required by 37 CFR 1.378(c). The information is required to obtain or retain a benefit by the public which is to file (and by the USPTO to process) an application. Confidentiality is governed by 35 U.S.C. 122 and 37 CFR 1.11 and 1.14. This collection is estimated to take 1 hour to complete, including gathering, preparing, and submitting the completed application form to the USPTO. Time will vary depending upon the individual case. Any comments on the amount of time you require to complete this form and/ or suggestions for reducing this burden, should be sent to the Chief Information Officer, U.S. Patent and Trademark Office, U.S. Department of Commerce, P.O. Box 1450, Alexandria, VA 22313-1450. DO NOT SEND FEES OR COMPLETED FORMS TO THIS ADDRESS. **This form can only be used when in conjunction with EFS-Web. If this form is mailed to the USPTO, it may cause delays in reinstating the patent.**

Privacy Act Statement

The Privacy Act of 1974 (P.L. 93-579) requires that you be given certain information in connection with your submission of the attached form related to a patent application or patent. Accordingly, pursuant to the requirements of the Act, please be advised that: (1) the general authority for the collection of this information is 35 U.S.C. 2(b)(2); (2) furnishing of the information solicited is voluntary; and (3) the principal purpose for which the information is used by the U.S. Patent and Trademark Office is to process and/or examine your submission related to a patent application or patent. If you do not furnish the requested information, the U.S. Patent and Trademark Office may not be able to process and/or examine your submission, which may result in termination of proceedings or abandonment of the application or expiration of the patent.

The information provided by you in this form will be subject to the following routine uses:

1. The information on this form will be treated confidentially to the extent allowed under the Freedom of Information Act (5 U.S.C. 552) and the Privacy Act (5 U.S.C. 552a). Records from this system of records may be disclosed to the Department of Justice to determine whether the Freedom of Information Act requires disclosure of these records.

2. A record from this system of records may be disclosed, as a routine use, in the course of presenting evidence to a court, magistrate, or administrative tribunal, including disclosures to opposing counsel in the course of settlement negotiations.

3. A record in this system of records may be disclosed, as a routine use, to a Member of Congress submitting a request involving an individual, to whom the record pertains, when the individual has requested assistance from the Member with respect to the subject matter of the record.

4. A record in this system of records may be disclosed, as a routine use, to a contractor of the Agency having need for the information in order to perform a contract. Recipients of information shall be required to comply with the requirements of the Privacy Act of 1974, as amended, pursuant to 5 U.S.C. 552a(m).

5. A record related to an International Application filed under the Patent Cooperation Treaty in this system of records may be disclosed, as a routine use, to the International Bureau of the World Intellectual Property Organization, pursuant to the Patent Cooperation Treaty.

6. A record in this system of records may be disclosed, as a routine use, to another federal agency for purposes of National Security review (35 U.S.C. 181) and for review pursuant to the Atomic Energy Act (42 U.S.C. 218(c)).

7. A record from this system of records may be disclosed, as a routine use, to the Administrator, General Services, or his/her designee, during an inspection of records conducted by GSA as part of that agency's responsibility to recommend improvements in records management practices and programs, under authority of 44 U.S.C. 2904 and 2906. Such disclosure shall be made in accordance with the GSA regulations governing inspection of records for this purpose, and any other relevant (i.e., GSA or Commerce) directive. Such disclosure shall not be used to make determinations about individuals.

8. A record from this system of records may be disclosed, as a routine use, to the public after either publication of the application pursuant to 35 U.S.C. 122(b) or issuance of a patent pursuant to 35 U.S.C. 151. Further, a record may be disclosed, subject to the limitations of 37 CFR 1.14, as a routine use, to the public if the record was filed in an application which became abandoned or in which the proceedings were terminated and which application is referenced by either a published application, an application open to public inspections or an issued patent.

9. A record from this system of records may be disclosed, as a routine use, to a Federal, State, or local law enforcement agency, if the USPTO becomes aware of a violation or potential violation of law or regulation.

UNITED STATES PATENT AND TRADEMARK OFFICE

Commissioner for Patents
United States Patent and Trademark Office
P.O. Box 1450
Alexandria, VA 22313-1450
www.uspto.gov

In re Patent No. 6894035
Issue Date: May 17,2005
Application No. 10672072
Filed: September 25,2003
Attorney Docket No. CGR-013CP3

:
:DECISION GRANTING PETITION
:UNDER 37 CFR 1.378(c)
:

This is a decision on the electronic petition, filed November 3,2010 ,under 37 CFR 1.378(c) to accept the unintentionally delayed payment of the 3.5 year maintenance fee for the above-identified patent.

The petition is **GRANTED**.

The maintenance fee is accepted, and the above-identified patent reinstated as of November 3,2010 . This decision also constitutes notice that the fee has been accepted. An electronic copy of the petition and this decision has been created as an entry in the Image File Wrapper. Nevertheless, petitioner should print and retain an independent copy.

Telephone inquiries related to this electronic decision should be directed to the Electronic Business Center at 1-866-217-9197.

SPE RESPONSE FOR CERTIFICATE OF CORRECTION

DATE : 10/21/11

TO SPE OF : ART UNIT 2611

SUBJECT : Request for Certificate of Correction for Appl. No.: 10672079 Patent No.: 7764752

CofC mailroom date: 10/05/11

Please respond to this request for a certificate of correction within 7 days.

FOR IFW FILES:

Please review the requested changes/corrections as shown in the **COCIN** document(s) in the IFW application image. No new matter should be introduced, nor should the scope or meaning of the claims be changed.

Please complete the response (see below) and forward the completed response to scanning using document code **COCX**.

FOR PAPER FILES:

Please review the requested changes/corrections as shown in the attached certificate of correction. Please complete this form (see below) and forward it with the file to:

Certificates of Correction Branch (CofC)
Randolph Square – 9D10-A
Palm Location 7580
You can fax the Directors/SPE response to 571-273-3421

Note: **Should the changes in the claims be approved?**

Lamonte Newsome

Certificates of Correction Branch

571-272-3421

Thank You For Your Assistance

The request for issuing the above-identified correction(s) is hereby:
Note your decision on the appropriate box.

SPE RESPONSE FOR CERTIFICATE OF CORRECTION

☒ **Approved** — **All** changes apply.

☐ **Approved in Part** — Specify below which changes **do not** apply.

☐ **Denied** — State the reasons for denial below.

Comments: _____

_____

_____

_____

_____

Chris [illegible] 2611

SPE **Art Unit**

UNITED STATES PATENT AND TRADEMARK OFFICE

Commissioner for Patents
United States Patent and Trademark Office
P.O. Box 1450
Alexandria, VA 22313-1450
www.uspto.gov

In re Patent No. 7240284
Issue Date: July 3,2007
Application No. 10672112
Filed: September 26,2003
Attorney Docket No. 4207/CIP/2

:
:DECISION GRANTING PETITION
:UNDER 37 CFR 1.378(c)
:

This is a decision on the electronic petition, filed September 13,2011 ,under 37 CFR 1.378(c) to accept the unintentionally delayed payment of the 3.5 year maintenance fee for the above-identified patent.

The petition is **GRANTED**.

The maintenance fee is accepted, and the above-identified patent reinstated as of September 13,2011 . This decision also constitutes notice that the fee has been accepted. An electronic copy of the petition and this decision has been created as an entry in the Image File Wrapper. Nevertheless, petitioner should print and retain an independent copy.

Telephone inquiries related to this electronic decision should be directed to the Electronic Business Center at 1-866-217-9197.

PTO/SB/66 (03-09)
Approved for use through 03/31/2012. OMB 0651-0016
U.S. Patent and Trademark Office: U.S. DEPARTMENT OF COMMERCE
Under the Paperwork Reduction Act of 1995, no persons are required to respond to a collection of information unless it displays valid OMB control number.

PETITION TO ACCEPT UNINTENTIONALLY DELAYED PAYMENT OF MAINTENANCE FEE IN AN EXPIRED PATENT (37 CFR 1.378(c))

Patent Number	Issue Date (YYYY-MM-DD)	Application Number	Filing Date (YYYY-MM-DD)	Docket Number (if applicable)
7240284	2007-07-03	10672112	2003-09-26	

CAUTION: Maintenance fee (and surcharge, if any) payment must correctly identify: (1) the patent number and (2) the application number of the actual U.S. application leading to issuance of that patent to ensure the fee(s) is/are associated with the correct patent. 37 CFR 1.366(c) and (d).

SMALL ENTITY
☒ Patentee claims, or has previously claimed, small entity status. See 37 CFR 1.27.

LOSS OF ENTITLEMENT TO SMALL ENTITY STATUS
☐ Patentee is no longer entitled to small entity status. See 37 CFR 1.27(g)

NOT Small Entity		Small Entity	
Fee	Code	Fee	Code
○ 3 ½ year	(1551)	● 3 ½ year	(2551)
○ 7 ½ year	(1552)	○ 7 ½ year	(2552)
○ 11 ½ year	(1553)	○ 11 ½ year	(2553)

SURCHARGE
The surcharge required by 37 CFR 1.20(i)(2) (Fee Code 1558) must be paid as a condition of accepting unintentionally delayed payment of the maintenance fee.

MAINTENANCE FEE (37 CFR 1.20(e)-(g))
The appropriate maintenance fee must be submitted with this petition.

STATEMENT
THE UNDERSIGNED CERTIFIES THAT THE DELAY IN PAYMENT OF THE MAINTENANCE FEE TO THIS PATENT WAS UNINTENTIONAL

PETITIONER(S) REQUEST THAT THE DELAYED PAYMENT OF THE MAINTENANCE FEE BE ACCEPTED AND THE PATENT REINSTATED

THIS PORTION MUST BE COMPLETED BY THE SIGNATORY OR SIGNATORIES

37 CFR 1.378(d) states: "Any petition under this section must be signed by an attorney or agent registered to practice before the Patent and Trademark Office, or by the patentee, the assignee, or other party in interest."

I certify, in accordance with 37 CFR 1.4(d)(4) that I am

- ● An attorney or agent registered to practice before the Patent and Trademark Office
- ○ A sole patentee
- ○ A joint patentee; I certify that I am authorized to sign this submission on behalf of all the other patentees.
- ○ A joint patentee; all of whom are signing this e-petition
- ○ The assignee of record of the entire interest

Under the Paperwork Reduction Act of 1995, no persons are required to respond to a collection of information unless it displays valid OMB control number.

Patent Practitioner			
A signature of the applicant or representative is required in accordance with 37 CFR 1.33 and 10.18. Please see 37 CFR 1.4(d) for the form of the signature			
Signature	/thomas h. ham/	Date (YYYY-MM-DD)	2011-09-13
Name	Thomas H. Ham	Registration Number	43654

This collection of information is required by 37 CFR 1.378(c). The information is required to obtain or retain a benefit by the public which is to file (and by the USPTO to process) an application. Confidentiality is governed by 35 U.S.C. 122 and 37 CFR 1.11 and 1.14. This collection is estimated to take 1 hour to complete, including gathering, preparing, and submitting the completed application form to the USPTO. Time will vary depending upon the individual case. Any comments on the amount of time you require to complete this form and/ or suggestions for reducing this burden, should be sent to the Chief Information Officer, U.S. Patent and Trademark Office, U.S. Department of Commerce, P.O. Box 1450, Alexandria, VA 22313-1450. DO NOT SEND FEES OR COMPLETED FORMS TO THIS ADDRESS. **This form can only be used when in conjunction with EFS-Web. If this form is mailed to the USPTO, it may cause delays in reinstating the patent.**

Privacy Act Statement

The Privacy Act of 1974 (P.L. 93-579) requires that you be given certain information in connection with your submission of the attached form related to a patent application or patent. Accordingly, pursuant to the requirements of the Act, please be advised that: (1) the general authority for the collection of this information is 35 U.S.C. 2(b)(2); (2) furnishing of the information solicited is voluntary; and (3) the principal purpose for which the information is used by the U.S. Patent and Trademark Office is to process and/or examine your submission related to a patent application or patent. If you do not furnish the requested information, the U.S. Patent and Trademark Office may not be able to process and/or examine your submission, which may result in termination of proceedings or abandonment of the application or expiration of the patent.

The information provided by you in this form will be subject to the following routine uses:

1. The information on this form will be treated confidentially to the extent allowed under the Freedom of Information Act (5 U.S.C. 552) and the Privacy Act (5 U.S.C. 552a). Records from this system of records may be disclosed to the Department of Justice to determine whether the Freedom of Information Act requires disclosure of these records.

2. A record from this system of records may be disclosed, as a routine use, in the course of presenting evidence to a court, magistrate, or administrative tribunal, including disclosures to opposing counsel in the course of settlement negotiations.

3. A record in this system of records may be disclosed, as a routine use, to a Member of Congress submitting a request involving an individual, to whom the record pertains, when the individual has requested assistance from the Member with respect to the subject matter of the record.

4. A record in this system of records may be disclosed, as a routine use, to a contractor of the Agency having need for the information in order to perform a contract. Recipients of information shall be required to comply with the requirements of the Privacy Act of 1974, as amended, pursuant to 5 U.S.C. 552a(m).

5. A record related to an International Application filed under the Patent Cooperation Treaty in this system of records may be disclosed, as a routine use, to the International Bureau of the World Intellectual Property Organization, pursuant to the Patent Cooperation Treaty.

6. A record in this system of records may be disclosed, as a routine use, to another federal agency for purposes of National Security review (35 U.S.C. 181) and for review pursuant to the Atomic Energy Act (42 U.S.C. 218(c)).

7. A record from this system of records may be disclosed, as a routine use, to the Administrator, General Services, or his/her designee, during an inspection of records conducted by GSA as part of that agency's responsibility to recommend improvements in records management practices and programs, under authority of 44 U.S.C. 2904 and 2906. Such disclosure shall be made in accordance with the GSA regulations governing inspection of records for this purpose, and any other relevant (i.e., GSA or Commerce) directive. Such disclosure shall not be used to make determinations about individuals.

8. A record from this system of records may be disclosed, as a routine use, to the public after either publication of the application pursuant to 35 U.S.C. 122(b) or issuance of a patent pursuant to 35 U.S.C. 151. Further, a record may be disclosed, subject to the limitations of 37 CFR 1.14, as a routine use, to the public if the record was filed in an application which became abandoned or in which the proceedings were terminated and which application is referenced by either a published application, an application open to public inspections or an issued patent.

9. A record from this system of records may be disclosed, as a routine use, to a Federal, State, or local law enforcement agency, if the USPTO becomes aware of a violation or potential violation of law or regulation.

UNITED STATES PATENT AND TRADEMARK OFFICE

Commissioner for Patents
United States Patent and Trademark Office
P.O. Box 1450
Alexandria, VA 22313-1450
www.uspto.gov

In re Patent No. 6916334
Issue Date: July 12,2005
Application No. 10672132
Filed: September 26,2003
Attorney Docket No. 20672-0002

:
:DECISION GRANTING PETITION
:UNDER 37 CFR 1.378(c)
:

This is a decision on the electronic petition, filed December 30,2010 ,under 37 CFR 1.378(c) to accept the unintentionally delayed payment of the 3.5 year maintenance fee for the above-identified patent.

The petition is **GRANTED**.

The maintenance fee is accepted, and the above-identified patent reinstated as of December 30,2010 . This decision also constitutes notice that the fee has been accepted. An electronic copy of the petition and this decision has been created as an entry in the Image File Wrapper. Nevertheless, petitioner should print and retain an independent copy.

Telephone inquiries related to this electronic decision should be directed to the Electronic Business Center at 1-866-217-9197.

PTO/SB/66 (03-09)
Approved for use through 03/31/2012. OMB 0651-0016
U.S. Patent and Trademark Office: U.S. DEPARTMENT OF COMMERCE
Under the Paperwork Reduction Act of 1995, no persons are required to respond to a collection of information unless it displays valid OMB control number.

PETITION TO ACCEPT UNINTENTIONALLY DELAYED PAYMENT OF MAINTENANCE FEE IN AN EXPIRED PATENT (37 CFR 1.378(c))

Patent Number	Issue Date (YYYY-MM-DD)	Application Number	Filing Date (YYYY-MM-DD)	Docket Number (if applicable)
6,916,334	2005-07-12	10/672,132	2003-09-26	7026.410

CAUTION: Maintenance fee (and surcharge, if any) payment must correctly identify: (1) the patent number and (2) the application number of the actual U.S. application leading to issuance of that patent to ensure the fee(s) is/are associated with the correct patent. 37 CFR 1.366(c) and (d).

SMALL ENTITY
☒ Patentee claims, or has previously claimed, small entity status. See 37 CFR 1.27.

LOSS OF ENTITLEMENT TO SMALL ENTITY STATUS
☐ Patentee is no longer entitled to small entity status. See 37 CFR 1.27(g)

NOT Small Entity		Small Entity	
Fee	Code	Fee	Code
○ 3 ½ year	(1551)	◉ 3 ½ year	(2551)
○ 7 ½ year	(1552)	○ 7 ½ year	(2552)
○ 11 ½ year	(1553)	○ 11 ½ year	(2553)

SURCHARGE
The surcharge required by 37 CFR 1.20(i)(2) (Fee Code 1558) must be paid as a condition of accepting unintentionally delayed payment of the maintenance fee.

MAINTENANCE FEE (37 CFR 1.20(e)-(g))
The appropriate maintenance fee must be submitted with this petition.

STATEMENT
THE UNDERSIGNED CERTIFIES THAT THE DELAY IN PAYMENT OF THE MAINTENANCE FEE TO THIS PATENT WAS UNINTENTIONAL

PETITIONER(S) REQUEST THAT THE DELAYED PAYMENT OF THE MAINTENANCE FEE BE ACCEPTED AND THE PATENT REINSTATED

THIS PORTION MUST BE COMPLETED BY THE SIGNATORY OR SIGNATORIES

37 CFR 1.378(d) states: "Any petition under this section must be signed by an attorney or agent registered to practice before the Patent and Trademark Office, or by the patentee, the assignee, or other party in interest."

I certify, in accordance with 37 CFR 1.4(d)(4) that I am

◉ An attorney or agent registered to practice before the Patent and Trademark Office

○ A sole patentee

○ A joint patentee; I certify that I am authorized to sign this submission on behalf of all the other patentees.

○ A joint patentee; all of whom are signing this e-petition

○ The assignee of record of the entire interest

Under the Paperwork Reduction Act of 1995, no persons are required to respond to a collection of information unless it displays valid OMB control number.

Patent Practitioner			
A signature of the applicant or representative is required in accordance with 37 CFR 1.33 and 10.18. Please see 37 CFR 1.4(d) for the form of the signature			
Signature	/Matthew A. Pequignot/	Date (YYYY-MM-DD)	2010-12-30
Name	Matthew A. Pequignot	Registration Number	43851

This collection of information is required by 37 CFR 1.378(c). The information is required to obtain or retain a benefit by the public which is to file (and by the USPTO to process) an application. Confidentiality is governed by 35 U.S.C. 122 and 37 CFR 1.11 and 1.14. This collection is estimated to take 1 hour to complete, including gathering, preparing, and submitting the completed application form to the USPTO. Time will vary depending upon the individual case. Any comments on the amount of time you require to complete this form and/ or suggestions for reducing this burden, should be sent to the Chief Information Officer, U.S. Patent and Trademark Office, U.S. Department of Commerce, P.O. Box 1450, Alexandria, VA 22313-1450. DO NOT SEND FEES OR COMPLETED FORMS TO THIS ADDRESS. **This form can only be used when in conjunction with EFS-Web. If this form is mailed to the USPTO, it may cause delays in reinstating the patent.**

Privacy Act Statement

The Privacy Act of 1974 (P.L. 93-579) requires that you be given certain information in connection with your submission of the attached form related to a patent application or patent. Accordingly, pursuant to the requirements of the Act, please be advised that: (1) the general authority for the collection of this information is 35 U.S.C. 2(b)(2); (2) furnishing of the information solicited is voluntary; and (3) the principal purpose for which the information is used by the U.S. Patent and Trademark Office is to process and/or examine your submission related to a patent application or patent. If you do not furnish the requested information, the U.S. Patent and Trademark Office may not be able to process and/or examine your submission, which may result in termination of proceedings or abandonment of the application or expiration of the patent.

The information provided by you in this form will be subject to the following routine uses:

1. The information on this form will be treated confidentially to the extent allowed under the Freedom of Information Act (5 U.S.C. 552) and the Privacy Act (5 U.S.C. 552a). Records from this system of records may be disclosed to the Department of Justice to determine whether the Freedom of Information Act requires disclosure of these records.

2. A record from this system of records may be disclosed, as a routine use, in the course of presenting evidence to a court, magistrate, or administrative tribunal, including disclosures to opposing counsel in the course of settlement negotiations.

3. A record in this system of records may be disclosed, as a routine use, to a Member of Congress submitting a request involving an individual, to whom the record pertains, when the individual has requested assistance from the Member with respect to the subject matter of the record.

4. A record in this system of records may be disclosed, as a routine use, to a contractor of the Agency having need for the information in order to perform a contract. Recipients of information shall be required to comply with the requirements of the Privacy Act of 1974, as amended, pursuant to 5 U.S.C. 552a(m).

5. A record related to an International Application filed under the Patent Cooperation Treaty in this system of records may be disclosed, as a routine use, to the International Bureau of the World Intellectual Property Organization, pursuant to the Patent Cooperation Treaty.

6. A record in this system of records may be disclosed, as a routine use, to another federal agency for purposes of National Security review (35 U.S.C. 181) and for review pursuant to the Atomic Energy Act (42 U.S.C. 218(c)).

7. A record from this system of records may be disclosed, as a routine use, to the Administrator, General Services, or his/her designee, during an inspection of records conducted by GSA as part of that agency's responsibility to recommend improvements in records management practices and programs, under authority of 44 U.S.C. 2904 and 2906. Such disclosure shall be made in accordance with the GSA regulations governing inspection of records for this purpose, and any other relevant (i.e., GSA or Commerce) directive. Such disclosure shall not be used to make determinations about individuals.

8. A record from this system of records may be disclosed, as a routine use, to the public after either publication of the application pursuant to 35 U.S.C. 122(b) or issuance of a patent pursuant to 35 U.S.C. 151. Further, a record may be disclosed, subject to the limitations of 37 CFR 1.14, as a routine use, to the public if the record was filed in an application which became abandoned or in which the proceedings were terminated and which application is referenced by either a published application, an application open to public inspections or an issued patent.

9. A record from this system of records may be disclosed, as a routine use, to a Federal, State, or local law enforcement agency, if the USPTO becomes aware of a violation or potential violation of law or regulation.

UNITED STATES PATENT AND TRADEMARK OFFICE

Commissioner for Patents
United States Patent and Trademark Office
P.O. Box 1450
Alexandria, VA 22313-1450
www.uspto.gov

Date Mailed : 05/09/11

Patent No. : 7339973 B2
Patent Issued : 03/04/08
Docket No. : **2003-0058-01**

Re: Request for Certificate of Correction

Consideration has been given your request for the issuance of a certificate of correction for the above-identified patent under the provisions of Rule(s) 1.322.

Respecting the alleged errors in the documents filed on 04/19/11; please see attachments. **"Therefore, no correction(s) is in order here under United States Codes (U.S.C.) 254 and the Code of Federal Regulation (C.F.R.) 1322."**

In view of the foregoing, your request in this matter is hereby denied.

Lamonte M. Newsome
For Mary Diggs, Supervisor
Decisions & Certificates
Of Correction Branch
(571) 272-3421 or (703) 305-8309

William Cray
C/o Cymer, Inc.
Legal Dept.
17075 Thornmint Court
San Diego CA 92127

LMN

SPE RESPONSE FOR CERTIFICATE OF CORRECTION

Paper No.: _____

DATE : 4/29/11

TO SPE OF : ART UNIT 2828

SUBJECT : Request for Certificate of Correction for Appl. No.: 10672182 Patent No.: 7339973

CofC mailroom date: 04/19/11

Please respond to this request for a certificate of correction within 7 days.

FOR IFW FILES:

Please review the requested changes/corrections as shown in the **COCIN** document(s) in the IFW application image. No new matter should be introduced, nor should the scope or meaning of the claims be changed.

Please complete the response (see below) and forward the completed response to scanning using document code **COCX**.

FOR PAPER FILES:

Please review the requested changes/corrections as shown in the attached certificate of correction. Please complete this form (see below) and forward it with the file to:

Certificates of Correction Branch (CofC)
Randolph Square – 9D10-A
Palm Location 7580

You can fax the Directors/SPE response to 571-270-9990

Lamonte Newsome

Certificates of Correction Branch

571-272-3421

Thank You For Your Assistance

The request for issuing the above-identified correction(s) is hereby:
Note your decision on the appropriate box.

- ❑ **Approved** — **All** changes apply.
- ❑ **Approved in Part** — Specify below which changes **do not** apply.
- **xDenied** — State the reasons for denial below.

Comments: The applicant has not previously claimed that the instant application is a CIP of 10/638,247 and 10/638,247 is not a continuation of 10/629,364, it is a divisional of 10/629,364.

SPE RESPONSE FOR CERTIFICATE OF CORRECTION

/Jessica Stultz/ Supervisory Patent Examiner

AU 2828

SPE Art Unit

SPE RESPONSE FOR CERTIFICATE OF CORRECTION

DATE : 6/10/11

TO SPE OF : ART UNIT 2828

SUBJECT : Request for Certificate of Correction for Appl. No.: 10672182 Patent No.: 7339973

CofC mailroom date: 5/25/11

Please respond to this request for a certificate of correction within 7 days.

FOR IFW FILES:

Please review the requested changes/corrections as shown in the **COCIN** document(s) in the IFW application image. No new matter should be introduced, nor should the scope or meaning of the claims be changed.

Please complete the response (see below) and forward the completed response to scanning using document code **COCX**.

FOR PAPER FILES:

Please review the requested changes/corrections as shown in the attached certificate of correction. Please complete this form (see below) and forward it with the file to:

Certificates of Correction Branch (CofC)
Randolph Square – 9D10-A
Palm Location 7580
[redacted]

Note: Title Page, item (60)

Lamonte Newsome

Certificates of Correction Branch

571-272-3421

Thank You For Your Assistance

The request for issuing the above-identified correction(s) is hereby:
Note your decision on the appropriate box.

xApproved	**All** changes apply.
☐ **Approved in Part**	Specify below which changes **do not** apply.
☐ **Denied**	State the reasons for denial below.

PAGE 2/3 * RCVD AT 6/13/2011 1:43:01 PM [Eastern Daylight Time] * SVR:W-PTOFAX-002/48 * DNIS:2709990 * CSID: * DURATION (mm-ss):00-00

SPE RESPONSE FOR CERTIFICATE OF CORRECTION

Comments: _____

/Jessica Stultz/ AU 2828

SPE **Art Unit**

PAGE 3/3 * RCVD AT 6/13/2011 1:43:01 PM [Eastern Daylight Time] * SVR:W-PTOFAX-002/48 * DNIS:2709990 * CSID: * DURATION (mm-ss):00-00

UNITED STATES PATENT AND TRADEMARK OFFICE

Commissioner for Patents
United States Patent and Trademark Office
P.O. Box 1450
Alexandria, VA 22313-1450
www.uspto.gov

MAILED

NOV 17 2010

OFFICE OF PETITIONS

COOPER & DUNHAM, LLP
30 ROCKEFELLER PLAZA
20TH FLOOR
NEW YORK, NY 10112

In re Application of :
Per Ehrenreich Nygaard, et al. :
Application No. 10/672,520 : ON PETITION
Filed: September 25, 2003 :
Attorney Docket No.: 1175/71019 :

This is a decision on the petition, filed September 22, 2010, to revive the above-identified application under 37 CFR 1.137(b).

The petition is GRANTED.

The two-month period for filing an appeal brief under 37 CFR 41.37 (accompanied by the fee required by 37 CFR 41.20(b)(2)), runs from the date of this decision.

This application became abandoned for failure to timely file a reply within the meaning of 37 CFR 1.113 to the final Office action of March 1, 2010. This decision precedes the mailing of a Notice of Abandonment. The proposed reply required for consideration of a petition to revive must be a Notice of Appeal (and appeal fee required by 37 CFR 41.20(b)(2)), an amendment that *prima facie* places the application in condition for allowance, a Request for Continued Examination (RCE) and submission (37 CFR 1.114), or the filing of a continuing application under 37 CFR 1.53(b). See MPEP 711.03(c)(II)(A)(2). On September 22, 2010 the present petition was filed.

The petition is not signed by a registered attorney or agent or record. However, in accordance with 37 CFR 1.34(a), the signature of Richard F. Jaworski appearing on the petition shall constitute a representation to the United States Patent and Trademark Office that he is authorized to represent the particular party on whose behalf he acts.

The petition satisfies the requirements of 37 CFR 1.137(b) in that petitioner has supplied (1) the reply in the form of a Notice of Appeal and appeal fee of $540; (2) the petition fee of $1,620; and (3) an adequate statement of unintentional delay[1].

[1] 37 CFR 1.137(b)(3) requires a statement that the entire delay in filing the required reply from the due date for the reply until the filing of a grantable petition pursuant to 37 CFR 1.137(b) was unintentional. While the statement is not made by an attorney of record, such statement is being treated as having been made as the result of a reasonable inquiry into the facts and circumstances of such delay. See 37 CFR 10.18(b) and Changes to Patent Practice and Procedure; Final Rule Notice, 62 Fed. Reg. 53131, 53178 (October 10, 1997), 1203 Off. Gaz. Pat. Office 63, 103 (October 21, 1997). In the event that such an inquiry has not been made, petitioner must make such an inquiry. If such inquiry results in the discovery that it is not correct that the entire delay in filing the required reply from the due date for the reply until the filing of a grantable petition pursuant to 37 CFR 1.137(b) was unintentional, petitioner must notify the Office.

This application is being referred to Technology Center AU 3767 to await the filing of an appeal brief or for such other appropriate reply as may be submitted to continue prosecution of the application.

Telephone inquiries concerning this decision should be directed to the undersigned at (571) 272-3204. Inquiries relating to further prosecution should be directed to the Technology Center.

Sherry D. Brinkley
Petitions Examiner
Office of Petitions

UNITED STATES PATENT AND TRADEMARK OFFICE

Commissioner for Patents
United States Patent and Trademark Office
P.O. Box 1450
Alexandria, VA 22313-1450
www.uspto.gov

Siemens Corporation
Intellectual Property Department
170 Wood Avenue South
Iselin NJ 08830

MAILED
DEC 15 2010
OFFICE OF PETITIONS

In re Application of :
Osman Ahmed :
Application No. 10/672,527 : DECISION ON PETITION
Filed: September 26, 2003 :
Attorney Docket No. 2003P14889US :

This is a decision on the petition under the unintentional provisions of 37 CFR 1.137(b), filed November 2, 2010, to revive the above-identified application.

The petition is **GRANTED**.

The application became abandoned for failure to reply in a timely manner to the final Office action mailed, April 11, 2008, which set a shortened statutory period for reply of three (3) months. No extensions of time under the provisions of 37 CFR 1.136(a) were obtained. Accordingly, the application became abandoned on July 12, 2008. A Notice of Abandonment was mailed on March 3, 2009.

The petition satisfies the requirements of 37 CFR 1.137(b) in that petitioner has supplied (1) the reply in the form of a Notice of Appeal, with the required fee of $540, and Appeal Brief, with the required fee of $540, (2) the petition fee of $1,620, and (3) a proper statement of unintentional delay. Accordingly the Notice of Appeal and Appeal Brief are accepted as being unintentionally delayed.

It is not apparent whether the person signing the statement of unintentional delay was in a position to have firsthand or direct knowledge of the facts and circumstances of the delay at issue. Nevertheless, such statement is being treated as having been made as the result of a reasonable inquiry into the facts and circumstances of such delay. See 37 CFR 10.18(b) and Changes to Patent Practice and Procedure; Final Rule Notice, 62 Fed. Reg. 53131, 53178 (October 10, 1997), 1203 Off. Gaz. Pat. Office 63, 103 (October 21, 1997). In the event that such an inquiry has not been made, petitioner must make such an inquiry. If such inquiry results in the discovery that it is not correct that the entire delay in filing the required reply from the due

date for the reply until the filing of a grantable petition pursuant to 37 CFR 1.137(b) was unintentional, petitioner must notify the Office.

The application file does not indicate a change of address has been filed in this case, although the address given on the petition differs from the address of record. A change of address should be filed in this case in accordance with MPEP 601.03. A courtesy copy of this decision is being mailed to the address noted on the petition. However, until otherwise instructed, all future correspondence regarding this application will be mailed solely to the address of record.

Telephone inquiries concerning this decision should be directed to Kimberly Inabinet at (571) 272-4618.

This application is being referred to the Board of Patent Appeals and Interferences for appropriate action in the normal course of business for processing of the reply received November 2, 2010.

/Kimberly Inabinet/

Kimberly Inabinet
Petitions Examiner
Office of Petitions

cc: David R. Moorman
Maginot, Moore & Beck
111 Monument Circle
Chase Tower 3250
Indianapolis, IN 46204

Doc Code: PET.PTA.RCAL
Document Description: Request for Recalculation in view of Wyeth

PTO/SB/131 (01-10)
Approved for use through 02/28/2011. OMB 0651-0020
U.S. Patent and Trademark Office; U. S. DEPARTMENT OF COMMERCE
Under the Paperwork Reduction Act of 1995, no persons are required to respond to a collection of information unless it displays a valid OMB control number.

REQUEST FOR RECALCULATION OF PATENT TERM ADJUSTMENT IN VIEW OF *WYETH**

Attorney Docket Number: TI-36552	Patent Number: 7,668,321
Filing Date (or 371(b) or (f) Date): 09-26-2003	Issue Date: 02/23/2010
First Named Inventor: Greg A. Hupp	
Title: AUTOMATIC POWER FOLDBACK FOR AUDIO APPLICATIONS	

PATENTEE HEREBY REQUESTS RECALCULATION OF THE PATENT TERM ADJUSTMENT (PTA) UNDER 35 USC 154(b) INDICATED ON THE ABOVE-IDENTIFIED PATENT. THE PATENTEE'S SOLE BASIS FOR REQUESTING THE RECALCULATION IS THE USPTO'S PRE-*WYETH* INTERPRETATION OF 35 U.S.C. 154(b)(2)(A).

Note: This form is only for requesting a recalculation of PTA for patents issued before March 2, 2010, if the sole basis for requesting the recalculation is the USPTO's pre-*Wyeth* interpretation of 35 U.S.C. 154(b)(2)(A). See Instruction Sheet on page 2 for more information.

Patentees are reminded that to preserve the right to review in the United States District Court for the District of Columbia of the USPTO's patent term adjustment determination, a patentee must ensure that he or she also takes the steps required under 35 U.S.C. 154(b)(3) and (b)(4) and 37 CFR 1.705 in a timely manner.

**Wyeth v. Kappos*, No. 2009-1120 (Fed. Cir., Jan. 7, 2010).

Signature / Wade J. Brady III /	Date August 12, 2010
Name (Print/Typed) Wade J. Brady III	Registration Number 32,080

***Note**: Signatures of all the inventors or assignees of record of the entire interest or their representative(s) are required in accordance with 37 CFR 1.33 and 11.18. Please see 37 CFR 1.4(d) for the form of the signature. If necessary, submit multiple forms for more than one signature, see below**.*

☑ *Total of 1 forms are submitted.

The information is required to obtain or retain a benefit by the public which is to file (and by the USPTO to process) an application. Confidentiality is governed by 35 U.S.C. 122 and 37 CFR 1.11 and 1.14. This collection is estimated to take 12 hours to complete, including gathering, preparing, and submitting the completed application form to the USPTO. Time will vary depending upon the individual case. Any comments on the amount of time you require to complete this form and/or suggestions for reducing this burden, should be sent to the Chief Information Officer, U.S. Patent and Trademark Office, U.S. Department of Commerce, P.O. Box 1450, Alexandria, VA 22313-1450. DO NOT SEND FEES OR COMPLETED FORMS TO THIS ADDRESS. **SEND TO: Commissioner for Patents, P.O. Box 1450, Alexandria, VA 22313-1450.**

If you need assistance in completing the form, call 1-800-PTO-9199 and select option 2.

UNITED STATES PATENT AND TRADEMARK OFFICE

UNITED STATES DEPARTMENT OF COMMERCE
United States Patent and Trademark Office
Address: COMMISSIONER FOR PATENTS
P.O. Box 1450
Alexandria, Virginia 22313-1450
www.uspto.gov

TEXAS INSTRUMENTS INCORPORATED
P O BOX 655474, M/S 3999
DALLAS, TX 75265

Mail Date: 08/17/2010

Applicant	: Greg A. Hupp	: DECISION ON REQUEST FOR
Patent Number	: 7668321	: RECALCULATION of PATENT
Issue Date	: 02/23/2010	: TERM ADJUSTMENT IN VIEW
Application No	: 10/672,534	: OF WYETH AND NOTICE OF INTENT TO
Filed	: 09/26/2003	: ISSUE CERTIFICATE OF CORRECTION
		:

The Request for Recalculation is **GRANTED** to the extent indicated.

The patent term adjustment has been determined to be **1135** days. The USPTO will *sua sponte* issue a certificate of correction reflecting the amount of PTA days determined by the recalculation.

Prior to the issuance of the certificate of correction, the USPTO will afford patentee an opportunity to be heard and request reconsideration. Accordingly, patentee has **one month or thirty (30) days**, whichever is longer, to file a request for reconsideration of this patent term adjustment calculation. See 35 U.S.C. 154(b)(3)(B)(ii) and 37 CFR 1.322(a)(4). No extensions of time will be granted under 37 CFR 1.136.

Patentee should use document code PET.OP if electronically filing a request for reconsideration of this patent term adjustment calculation. The patentee must also include the information required by 37 CFR 1.705(b)(2) and the fee required by 37 CFR 1.18(e). If patentee does not file a timely request for reconsideration of this patent term adjustment calculation including the information required by 37 CFR 1.705(b)(2) and the fee required by 37 CFR 1.18(e), the USPTO will issue a certificate of correction reflecting the PTA determination noted above.

Patentee should be aware that in order to preserve the right to review in the United States District Court for the District of Columbia of the USPTO patent term adjustment determination, patentee must ensure that he or she also take the steps required under 35 U.S.C. 154(b)(4)(A) in a timely manner. Nothing in the request for recalculation should be construed as providing an alternative time frame for commencing a civil action under 35 U.S.C. 154(b)(4)(A).

Any questions concerning this decision should be directed to the Office of Patent Legal Administration at 571-272-7702.

UNITED STATES PATENT AND TRADEMARK OFFICE

Commissioner for Patents
United States Patent and Trademark Office
P.O. Box 1450
Alexandria, VA 22313-1450
www.uspto.go

MICHAEL A. SHIPPEY, PH. D., J.D.
15902A HALIB URTON ROAD, NO. 116
HACIENDA HEIGHTS CA 91745

MAILED
OCT 04 2011
OFFICE OF PETITIONS

In re Patent No. 7,004,057 :
Issue Date: February 28, 2006 :
Application No. 10/672,594 : ON PETITION
Filed: September 27, 2003 :
For: AMMUNITION FEEDER :

This is a decision on the petition under 37 CFR 1.378(c), filed September 14, 2011, to accept the unintentionally delayed payment of a maintenance fee for the above-identified patent.

The petition is **GRANTED**.

This patent expired on March 1, 2010 for failure to pay the first maintenance fee. Since this petition was submitted within twenty-four months after the six-month grace period provided in 37 CFR 1.362(e), the petition was timely filed under the provisions of 37 CFR 1.378(c).

The maintenance fee is hereby accepted and the above-identified patent is reinstated as of the mail date of this decision.

It is not apparent whether the person signing the statement of unintentional delay was in a position to have firsthand or direct knowledge of the facts and circumstances of the delay at issue. Nevertheless, such statement is being treated as having been made as the result of a reasonable inquiry into the facts and circumstances of such delay. In the event that such an inquiry has not been made, petitioner must make such an inquiry. If such inquiry results in the discovery that the delay in paying the maintenance fee under 37 CFR 1.378(c) was intentional, petitioner must notify the Office.

Telephone inquiries concerning this decision should be directed to the undersigned at (571) 272-3208.

/KOC/
Karen Creasy
Petitions Examiner
Office of Petitions

Cc:

CHRIS A. CASEIRO
VERRILL DANA, LLP
ONE PORTLAND SQUARE
PORTLAND, ME 04112-0586

UNITED STATES PATENT AND TRADEMARK OFFICE

UNITED STATES DEPARTMENT OF COMMERCE
United States Patent and Trademark Office
Address: COMMISSIONER FOR PATENTS
P.O. Box 1450
Alexandria, Virginia 22313-1450
www.uspto.gov

APPLICATION NO.	FILING DATE	FIRST NAMED INVENTOR	ATTORNEY DOCKET NO.	CONFIRMATION NO.
10/672,777	09/26/2003	Bradford Austin Fisher	RSW920030123US1 (111)	9674

46320 7590 02/25/2011
CAREY, RODRIGUEZ, GREENBERG & PAUL, LLP
STEVEN M. GREENBERG
950 PENINSULA CORPORATE CIRCLE
SUITE 2022
BOCA RATON, FL 33487

EXAMINER
BELANI, KISHIN G

ART UNIT	PAPER NUMBER
2443	

MAIL DATE	DELIVERY MODE
02/25/2011	PAPER

Please find below and/or attached an Office communication concerning this application or proceeding.

The time period for reply, if any, is set in the attached communication.

UNITED STATES PATENT AND TRADEMARK OFFICE

BEFORE THE
BOARD OF PATENT APPEALS AND INTERFERENCES

Ex parte BRADFORD AUSTIN FISHER
and RANDY ALLAN RENDAHL

Appeal No. 2009-006321
Application 10/672,777
Technology Center 2400

DECISION ON PETITION

This is a decision on the "Petition Under 37 C.F.R. § 41.3", filed December 21, 2010 ("Petition"). The Petition requests that:

1) "that the Board's rejection of claims 1 and 11 be designated a new grounds of rejection pursuant to 37 C.F.R. § 41.50(b)", and
2) "that a Decision be issued in which 'the decision of the examiner[is] reversed in whole or in part on the grounds and on the claims specified by the examiner' pursuant to 37 C.F.R. § 41.50(a)(1)".

FINDINGS

1) On April 1, 2009 a Docketing Notice, giving the application an Appeal Number of 2009-006321 was mailed to appellants.
2) On September 22, 2010 the Board mailed a decision to Appellants, which affirmed all the rejections on appeal.

3) On November 22, 2010, appellants filed a Request for Rehearing. In their Request, Appellants argued:

1) "the Honorable Board either misapprehended and/or overlooked certain arguments presented by Appellants in the Appeal Brief of February 22, 2008 and in the Reply Brief of June 17, 2008" (Request for Rehearing p1) and;

b) Moreover in analyzing the current Decision, Appellants cannot rely upon the Honorable Board maintaining the same positions in a subsequent Decision as the Honorable Board presented in the current Decision because of these error. Thus although Appellants will point out certain errors in the Honorable Boards current analysis, Appellants recognize that any subsequent Decision by the Board will necessarily be different and Appellants should be given the opportunity to address the Honorable Board's analysis . (Request for Rehearing p.7)

4) On December 23, 2010, the Board mailed to Appellants a Decision on Rehearing, which denied Appellants' Request for Rehearing, and also denied Appellants' Request to designate a new ground of Rejection.

5) Appellants, on January 6, 2011, filed their "Petition Under 37 CFR §41.3", requesting that the Chief Administrative Patent Judge designate the new grounds of rejection, and that the decision of the examiner be reversed in whole or in part.

DISCUSSION

Appellants, in their petition, state that:

The issue of whether or not a decision by the Board constitutes a new grounds of rejection involves the question as to whether the Board followed the regulations of the Patent Office, and a review of this issue is a proper exercise of authority. *See In Re Oku*, 25 USPQ2d 1155 (Comm'r Pat. 1992)" (Petition p3)

The Commissioner (now Director) in *Oku* did not grant *Oku*'s request for a designation of a new grounds of direction. Instead, the Commissioner granted a request to reopen under 37 CFR §1.198, and denied the rest of the Petition (*In Re Oku*, 25 USPQ2d 1155, 1157 (Comm'r Pat. 1992)). It is also noted that *In re Weiss* 160 USPQ 423 (Comm'r Pat. 1967), held:

> The Board in its decision of February 8, 1967 held that it had not employed a new ground of rejection and pointed out its reasons for so holding. A careful review of the case fails to disclose any such clear error in the Board's action in that respect as would justify supervisory intervention. The Board's interpretation of the claims would appear to be a matter reviewable on appeal to the Courts rather than upon petition. *In re Weiss* 160 USPQ 423, 424 (Comm'r Pat. 1967).

The panel, in this appeal pointed out its reason for not holding the rejection of claims 1 and 11 as a new ground of rejection. Accordingly, this portion of the petition must be denied.

In addition, it is noted that Appellants also are requesting a new decision (Petition p 28). The Commissioner (now Director) in *Oku* states:

> "The Commissioner does not review the merits of final decision of the Board. *Cf. in re Dickerson, 299* F.2d 954, 958, 133 USPQ 39, 43 (CCPA 1962) ("[I]n performing his duties, the Commissioner cannot usurp the functions or impinge upon the jurisdiction of the Board... ".

Thus Appellants' request for "a Decision in which "the decision of the examiner [is] reversed in whole or in part on the ground and on the claims specified by the examiner is denied.

Appellants' time to file an appeal to the Courts continues to run two months from the date of the Decision on Request for Rehearing.

DECISION

In view of the foregoing, the Petition is DENIED.

James T. Moore
Acting Chief Administrative Patent Judge

Carey, Rodriguez, Greenberg & Paul, LLP
Steven M. Greenberg
950 Peninsula Corporate Circle
Suite 3020
Boca Raton, FL 33487

UNITED STATES PATENT AND TRADEMARK OFFICE

Commissioner for Patents
United States Patent and Trademark Office
P.O. Box 1450
Alexandria, VA 22313-1450
www.uspto.gov

CAREY, RODRIGUEZ, GREENBERG & PAUL, LLP
STEVEN M. GREENBERG
950 PENINSULA CORPORATE CIRCLE
SUITE 2022
BOCA RATON FL 33487

MAILED
MAY 3 1 2011
OFFICE OF PETITIONS

In re Application of	:	
Bradford Austin Fisher et al.	:	
Application No. 10/672,777	:	DECISION ON PETITION
Filed: August 27, 2004	:	
Attorney Docket No. RSW920030123US1 (111)	:	

This is a decision on the petition under the unintentional provisions of 37 CFR 1.137(b), filed May 2, 2011, to revive the above-identified application.

The petition is **GRANTED**.

This application became abandoned as a result of petitioner's failure to take appropriate action in a timely manner after the decision on request for rehearing of December 23, 2010 by the Board of Patent Appeals and Interferences. Therefore, the proceedings as to the rejected claims were terminated. *See* 37 CFR 1.197(b). As no claim was allowed, the application became abandoned on February 24, 2011. *See* MPEP 1214.06. A Notice of Abandonment was mailed on March 24, 2011.

The petition satisfies the requirements of 37 CFR 1.137(b) in that petitioner has supplied (1) the reply in the form of an RCE, with the required fee of $810, (2) the petition fee of $1,620, and (3) a proper statement of unintentional delay. Accordingly, the RCE is accepted as being unintentionally delayed.

Telephone inquiries concerning this decision should be directed to Kimberly Inabinet at (571) 272-4618.

This application is being referred to Technology Center AU 2443 for appropriate action by the Examiner in the normal course of business on the reply received May 2, 2011.

/Kimberly Inabinet/

Kimberly Inabinet
Petitions Examiner
Office of Petitions

UNITED STATES PATENT AND TRADEMARK OFFICE

Commissioner for Patents
United States Patent and Trademark Office
P.O. Box 1450
Alexandria, VA 22313-1450
www.uspto.gov

FACTOR & LAKE, LTD
1327 W. WASHINGTON BLVD.
SUITE 5G/H
CHICAGO IL 60607

MAILED
SEP 27 2010
OFFICE OF PETITIONS

In re Application of	:	
Guodon Wang	:	
Application No. 10/672,812	:	NOTICE
Patent No. 7,106,170	:	
Filed: September 26, 2003	:	
Attorney Docket No. UDL-071308		

This is a notice regarding your request for acceptance of a fee deficiency submission under 37 CFR 1.28.

The Office no longer investigates or rejects original or reissue patent under 37 CFR 1.56. **1098 Off. Gaz. Pat. Office 502 (January 3, 1989)**. Therefore, nothing in this Notice is intended to imply that an investigation was done.

Your fee deficiency submission under 37 CFR 1.28 is hereby **ACCEPTED**.

This patent is no longer entitled to small entity status. Accordingly, all future fees paid in this patent must be paid at the large entity rate.

Inquiries related to this communication should be directed to the undersigned at (571) 272-2991.

/Terri Johnson/
Terri Johnson
Petitions Examiner
Office of Petitions

UNITED STATES PATENT AND TRADEMARK OFFICE

Commissioner for Patents
United States Patent and Trademark Office
P.O. Box 1450
Alexandria, VA 22313-1450
www.uspto.gov

WOODCOCK WASHBURN LLP
CIRA CENTRE, 12TH FLOOR
2929 ARCH STREET
PHILADELPHIA PA 19104-2891

MAILED
MAY 27 2011
OFFICE OF PETITIONS

In re Application of	:	
RIEHL, Mark Edward	:	
Application No. 10/672,833	:	DECISION ON PETITION
Filed: September 26, 2003	:	UNDER 37 CFR 1.78(a)(3)
Attorney Docket No. NNI-0005	:	

This is a decision on the petition under 37 CFR 1.78(a)(3), filed April 29, 2011 to accept an unintentionally delayed claim under 35 U.S.C. § 120 for the benefit of priority to the prior-filed nonprovisional applications set forth in the Application Dada Sheet filed with the petition.

The petitions are **GRANTED**.

A petition for acceptance of a claim for late priority under 37 CFR 1.78(a)(3) is only applicable to those applications filed on or after November 29, 2000. Further, the petition is appropriate only after the expiration of the period specified in 37 CFR 1.78(a)(2)(ii). In addition, the petition under 37 CFR 1.78(a)(3) must be accompanied by:

(1) the reference required by 35 U.S.C. § 120 and 37 CFR 1.78(a)(2)(i) of the prior-filed application, unless previously submitted;
(2) the surcharge set forth in § 1.17(t); and
(3) a statement that the entire delay between the date the claim was due under 37 CFR 1.78(a)(2)(ii) and the date the claim was filed was unintentional. The Director may require additional information where there is a question whether the delay was unintentional.

All of the above requirements having been satisfied, the late claim for priority under 35 U.S.C. § 120 is accepted as being unintentionally delayed.

The rule at 37 CFR § 1.78(a)(3) requires a statement that the entire delay between the date the claim was due under 37 CFR § 1.78(a)(2)(ii) and the date the claim was filed was unintentional. Since the statement appearing in the petition varies from the required language, the statement is

being construed as the statement required by 37 CFR §1.78(a)(3). If this is not a correct reading of the statement appearing in the petition, petitioner should promptly notify the Office.

The granting of the petition to accept the delayed benefit claim to the prior-filed applications under 37 CFR 1.78(a)(3) should not be construed as meaning that this application is entitled to the benefit of the prior-filed applications. In order for this application to be entitled to the benefit of the prior-filed applications, all other requirements under 35 U.S.C. § 120 and 37

CFR 1.78(a)(1) and (a)(2) must be met. Similarly, the fact that the corrected Filing Receipt accompanying this decision on petition includes the prior-filed applications should not be construed as meaning that applicant is entitled to the claim for benefit of priority to the prior-filed applications noted thereon.

A corrected Filing Receipt, which includes the priority claim to the prior-filed nonprovisional applications, accompanies this decision on petition.

Any inquiries concerning this decision may be directed to Jose' G Dees at (571) 272-1569. All other inquiries concerning either the examination procedures or status of the application should be directed to the Technology Center.

This application is being forwarded to Technology Center Art Unit 3735 for consideration by the examiner of applicant's entitlement to claim benefit of priority under 35 U.S.C. § 120 to the prior-filed applications.

David Bucci
Petitions Examiner
Office of Petitions

ATTACHMENT: Corrected Filing Receipt

UNITED STATES PATENT AND TRADEMARK OFFICE

UNITED STATES DEPARTMENT OF COMMERCE
United States Patent and Trademark Office
Address: COMMISSIONER FOR PATENTS
P.O. Box 1450
Alexandria, Virginia 22313-1450
www.uspto.gov

APPLICATION NUMBER	FILING or 371(c) DATE	GRP ART UNIT	FIL FEE REC'D	ATTY.DOCKET.NO	TOT CLAIMS	IND CLAIMS
10/672,833	09/26/2003	3735	881	NNI-0005	69	3

CONFIRMATION NO. 1330

CORRECTED FILING RECEIPT

23377
WOODCOCK WASHBURN LLP
CIRA CENTRE, 12TH FLOOR
2929 ARCH STREET
PHILADELPHIA, PA 19104-2891

OC000000047914027

Date Mailed: 05/27/2011

Receipt is acknowledged of this non-provisional patent application. The application will be taken up for examination in due course. Applicant will be notified as to the results of the examination. Any correspondence concerning the application must include the following identification information: the U.S. APPLICATION NUMBER, FILING DATE, NAME OF APPLICANT, and TITLE OF INVENTION. Fees transmitted by check or draft are subject to collection. Please verify the accuracy of the data presented on this receipt. **If an error is noted on this Filing Receipt, please submit a written request for a Filing Receipt Correction. Please provide a copy of this Filing Receipt with the changes noted thereon. If you received a "Notice to File Missing Parts" for this application, please submit any corrections to this Filing Receipt with your reply to the Notice. When the USPTO processes the reply to the Notice, the USPTO will generate another Filing Receipt incorporating the requested corrections**

Applicant(s)

Mark Edward Riehl, Doylestown, PA;

Power of Attorney: The patent practitioners associated with Customer Number 23377

Domestic Priority data as claimed by applicant

This appln claims benefit of 60/452,477 03/07/2003
and is a CON of 10/657,296 09/08/2003 PAT 7,153,256
which claims benefit of 60/452,477 03/07/2003

Foreign Applications (You may be eligible to benefit from the **Patent Prosecution Highway** program at the USPTO. Please see http://www.uspto.gov for more information.)

If Required, Foreign Filing License Granted: 12/18/2003

The country code and number of your priority application, to be used for filing abroad under the Paris Convention, is **US 10/672,833**

Projected Publication Date: Not Applicable

Non-Publication Request: No

Early Publication Request: No
**** SMALL ENTITY ****

Title

Reducing discomfort caused by electrical stimulation

Preliminary Class

600

PROTECTING YOUR INVENTION OUTSIDE THE UNITED STATES

Since the rights granted by a U.S. patent extend only throughout the territory of the United States and have no effect in a foreign country, an inventor who wishes patent protection in another country must apply for a patent in a specific country or in regional patent offices. Applicants may wish to consider the filing of an international application under the Patent Cooperation Treaty (PCT). An international (PCT) application generally has the same effect as a regular national patent application in each PCT-member country. The PCT process **simplifies** the filing of patent applications on the same invention in member countries, but **does not result** in a grant of "an international patent" and does not eliminate the need of applicants to file additional documents and fees in countries where patent protection is desired.

Almost every country has its own patent law, and a person desiring a patent in a particular country must make an application for patent in that country in accordance with its particular laws. Since the laws of many countries differ in various respects from the patent law of the United States, applicants are advised to seek guidance from specific foreign countries to ensure that patent rights are not lost prematurely.

Applicants also are advised that in the case of inventions made in the United States, the Director of the USPTO must issue a license before applicants can apply for a patent in a foreign country. The filing of a U.S. patent application serves as a request for a foreign filing license. The application's filing receipt contains further information and guidance as to the status of applicant's license for foreign filing.

Applicants may wish to consult the USPTO booklet, "General Information Concerning Patents" (specifically, the section entitled "Treaties and Foreign Patents") for more information on timeframes and deadlines for filing foreign patent applications. The guide is available either by contacting the USPTO Contact Center at 800-786-9199, or it can be viewed on the USPTO website at http://www.uspto.gov/web/offices/pac/doc/general/index.html.

For information on preventing theft of your intellectual property (patents, trademarks and copyrights), you may wish to consult the U.S. Government website, http://www.stopfakes.gov. Part of a Department of Commerce initiative, this website includes self-help "toolkits" giving innovators guidance on how to protect intellectual property in specific countries such as China, Korea and Mexico. For questions regarding patent enforcement issues, applicants may call the U.S. Government hotline at 1-866-999-HALT (1-866-999-4158).

LICENSE FOR FOREIGN FILING UNDER

Title 35, United States Code, Section 184

Title 37, Code of Federal Regulations, 5.11 & 5.15

GRANTED

The applicant has been granted a license under 35 U.S.C. 184, if the phrase "IF REQUIRED, FOREIGN FILING LICENSE GRANTED" followed by a date appears on this form. Such licenses are issued in all applications where the conditions for issuance of a license have been met, regardless of whether or not a license may be required as

set forth in 37 CFR 5.15. The scope and limitations of this license are set forth in 37 CFR 5.15(a) unless an earlier license has been issued under 37 CFR 5.15(b). The license is subject to revocation upon written notification. The date indicated is the effective date of the license, unless an earlier license of similar scope has been granted under 37 CFR 5.13 or 5.14.

This license is to be retained by the licensee and may be used at any time on or after the effective date thereof unless it is revoked. This license is automatically transferred to any related applications(s) filed under 37 CFR 1.53(d). This license is not retroactive.

The grant of a license does not in any way lessen the responsibility of a licensee for the security of the subject matter as imposed by any Government contract or the provisions of existing laws relating to espionage and the national security or the export of technical data. Licensees should apprise themselves of current regulations especially with respect to certain countries, of other agencies, particularly the Office of Defense Trade Controls, Department of State (with respect to Arms, Munitions and Implements of War (22 CFR 121-128)); the Bureau of Industry and Security, Department of Commerce (15 CFR parts 730-774); the Office of Foreign AssetsControl, Department of Treasury (31 CFR Parts 500+) and the Department of Energy.

NOT GRANTED

No license under 35 U.S.C. 184 has been granted at this time, if the phrase "IF REQUIRED, FOREIGN FILING LICENSE GRANTED" DOES NOT appear on this form. Applicant may still petition for a license under 37 CFR 5.12, if a license is desired before the expiration of 6 months from the filing date of the application. If 6 months has lapsed from the filing date of this application and the licensee has not received any indication of a secrecy order under 35 U.S.C. 181, the licensee may foreign file the application pursuant to 37 CFR 5.15(b).

UNITED STATES PATENT AND TRADEMARK OFFICE

Commissioner for Patents
United States Patent and Trademark Office
P.O. Box 1450
Alexandria, VA 22313-1450
www.uspto.gov

In re Patent No. 7146996
Issue Date: December 12,2006
Application No. 10673285
Filed: September 30,2003
Attorney Docket No. TTT-001-A

:
:DECISION GRANTING PETITION
:UNDER 37 CFR 1.378(c)
:

This is a decision on the electronic petition, filed March 22,2011 ,under 37 CFR 1.378(c) to accept the unintentionally delayed payment of the 3.5 year maintenance fee for the above-identified patent.

The petition is **GRANTED**.

The maintenance fee is accepted, and the above-identified patent reinstated as of March 22,2011 .
This decision also constitutes notice that the fee has been accepted. An electronic copy of the petition and this decision has been created as an entry in the Image File Wrapper. Nevertheless, petitioner should print and retain an independent copy.

Telephone inquiries related to this electronic decision should be directed to the Electronic Business Center at 1-866-217-9197.

PTO/SB/66 (03-09)
Approved for use through 03/31/2012. OMB 0651-0016
U.S. Patent and Trademark Office: U.S. DEPARTMENT OF COMMERCE
Under the Paperwork Reduction Act of 1995, no persons are required to respond to a collection of information unless it displays valid OMB control number.

PETITION TO ACCEPT UNINTENTIONALLY DELAYED PAYMENT OF MAINTENANCE FEE IN AN EXPIRED PATENT (37 CFR 1.378(c))

Patent Number	Issue Date (YYYY-MM-DD)	Application Number	Filing Date (YYYY-MM-DD)	Docket Number (if applicable)
7146996	2006-12-12	10673285	2003-09-30	

CAUTION: Maintenance fee (and surcharge, if any) payment must correctly identify: (1) the patent number and (2) the application number of the actual U.S. application leading to issuance of that patent to ensure the fee(s) is/are associated with the correct patent. 37 CFR 1.366(c) and (d).

SMALL ENTITY
☒ Patentee claims, or has previously claimed, small entity status. See 37 CFR 1.27.

LOSS OF ENTITLEMENT TO SMALL ENTITY STATUS
☐ Patentee is no longer entitled to small entity status. See 37 CFR 1.27(g)

NOT Small Entity		Small Entity	
Fee	Code	Fee	Code
○ 3 ½ year	(1551)	◉ 3 ½ year	(2551)
○ 7 ½ year	(1552)	○ 7 ½ year	(2552)
○ 11 ½ year	(1553)	○ 11 ½ year	(2553)

SURCHARGE
The surcharge required by 37 CFR 1.20(i)(2) (Fee Code 1558) must be paid as a condition of accepting unintentionally delayed payment of the maintenance fee.

MAINTENANCE FEE (37 CFR 1.20(e)-(g))
The appropriate maintenance fee must be submitted with this petition.

STATEMENT
THE UNDERSIGNED CERTIFIES THAT THE DELAY IN PAYMENT OF THE MAINTENANCE FEE TO THIS PATENT WAS UNINTENTIONAL

PETITIONER(S) REQUEST THAT THE DELAYED PAYMENT OF THE MAINTENANCE FEE BE ACCEPTED AND THE PATENT REINSTATED

THIS PORTION MUST BE COMPLETED BY THE SIGNATORY OR SIGNATORIES

37 CFR 1.378(d) states: "Any petition under this section must be signed by an attorney or agent registered to practice before the Patent and Trademark Office, or by the patentee, the assignee, or other party in interest."

I certify, in accordance with 37 CFR 1.4(d)(4) that I am

◉ An attorney or agent registered to practice before the Patent and Trademark Office

○ A sole patentee

○ A joint patentee; I certify that I am authorized to sign this submission on behalf of all the other patentees.

○ A joint patentee; all of whom are signing this e-petition

○ The assignee of record of the entire interest

Under the Paperwork Reduction Act of 1995, no persons are required to respond to a collection of information unless it displays valid OMB control number.

Patent Practitioner			
A signature of the applicant or representative is required in accordance with 37 CFR 1.33 and 10.18. Please see 37 CFR 1.4(d) for the form of the signature			
Signature	/Jason J. Young/	Date (YYYY-MM-DD)	2011-03-22
Name	Jason J. Young	Registration Number	34048

This collection of information is required by 37 CFR 1.378(c). The information is required to obtain or retain a benefit by the public which is to file (and by the USPTO to process) an application. Confidentiality is governed by 35 U.S.C. 122 and 37 CFR 1.11 and 1.14. This collection is estimated to take 1 hour to complete, including gathering, preparing, and submitting the completed application form to the USPTO. Time will vary depending upon the individual case. Any comments on the amount of time you require to complete this form and/ or suggestions for reducing this burden, should be sent to the Chief Information Officer, U.S. Patent and Trademark Office, U.S. Department of Commerce, P.O. Box 1450, Alexandria, VA 22313-1450. DO NOT SEND FEES OR COMPLETED FORMS TO THIS ADDRESS. **This form can only be used when in conjunction with EFS-Web. If this form is mailed to the USPTO, it may cause delays in reinstating the patent.**

Privacy Act Statement

The Privacy Act of 1974 (P.L. 93-579) requires that you be given certain information in connection with your submission of the attached form related to a patent application or patent. Accordingly, pursuant to the requirements of the Act, please be advised that: (1) the general authority for the collection of this information is 35 U.S.C. 2(b)(2); (2) furnishing of the information solicited is voluntary; and (3) the principal purpose for which the information is used by the U.S. Patent and Trademark Office is to process and/or examine your submission related to a patent application or patent. If you do not furnish the requested information, the U.S. Patent and Trademark Office may not be able to process and/or examine your submission, which may result in termination of proceedings or abandonment of the application or expiration of the patent.

The information provided by you in this form will be subject to the following routine uses:

1. The information on this form will be treated confidentially to the extent allowed under the Freedom of Information Act (5 U.S.C. 552) and the Privacy Act (5 U.S.C. 552a). Records from this system of records may be disclosed to the Department of Justice to determine whether the Freedom of Information Act requires disclosure of these records.

2. A record from this system of records may be disclosed, as a routine use, in the course of presenting evidence to a court, magistrate, or administrative tribunal, including disclosures to opposing counsel in the course of settlement negotiations.

3. A record in this system of records may be disclosed, as a routine use, to a Member of Congress submitting a request involving an individual, to whom the record pertains, when the individual has requested assistance from the Member with respect to the subject matter of the record.

4. A record in this system of records may be disclosed, as a routine use, to a contractor of the Agency having need for the information in order to perform a contract. Recipients of information shall be required to comply with the requirements of the Privacy Act of 1974, as amended, pursuant to 5 U.S.C. 552a(m).

5. A record related to an International Application filed under the Patent Cooperation Treaty in this system of records may be disclosed, as a routine use, to the International Bureau of the World Intellectual Property Organization, pursuant to the Patent Cooperation Treaty.

6. A record in this system of records may be disclosed, as a routine use, to another federal agency for purposes of National Security review (35 U.S.C. 181) and for review pursuant to the Atomic Energy Act (42 U.S.C. 218(c)).

7. A record from this system of records may be disclosed, as a routine use, to the Administrator, General Services, or his/her designee, during an inspection of records conducted by GSA as part of that agency's responsibility to recommend improvements in records management practices and programs, under authority of 44 U.S.C. 2904 and 2906. Such disclosure shall be made in accordance with the GSA regulations governing inspection of records for this purpose, and any other relevant (i.e., GSA or Commerce) directive. Such disclosure shall not be used to make determinations about individuals.

8. A record from this system of records may be disclosed, as a routine use, to the public after either publication of the application pursuant to 35 U.S.C. 122(b) or issuance of a patent pursuant to 35 U.S.C. 151. Further, a record may be disclosed, subject to the limitations of 37 CFR 1.14, as a routine use, to the public if the record was filed in an application which became abandoned or in which the proceedings were terminated and which application is referenced by either a published application, an application open to public inspections or an issued patent.

9. A record from this system of records may be disclosed, as a routine use, to a Federal, State, or local law enforcement agency, if the USPTO becomes aware of a violation or potential violation of law or regulation.

UNITED STATES PATENT AND TRADEMARK OFFICE

Commissioner for Patents
United States Patent and Trademark Office
P.O. Box 1450
Alexandria, VA 22313-1450
www.uspto.gov

BORDEN LADNER GERVAIS LLP
Anne Kinsman
WORLD EXCHANGE PLAZA
100 QUEEN STREET SUITE 1100
OTTAWA ON K1P 1J9 CA CANADA

MAILED
NOV 19 2010
OFFICE OF PETITIONS

In re Application of :
Mo-Han Fong et al. :
Application No. 10/673,480 : ON PETITION
Filed: September 30, 2003 :
Attorney Docket No. 0583P57US01 :

This is in response to the Petition To The Director Under 37 CFR 1.182, filed June 24, 2010, which is being treated as a petition under 37 CFR 1.59 to expunge information from the above identified application.

The petition requests expungement of the examiner's prior art search strategy, the examiner's search notes, the Notice of References Cited and pages 2-5 of the Notice of Allowability all dated March 24, 2010.

The petition under 37 CFR 1.59 is **dismissed**.

The instant petition indicates that petitioner has or may suffer irreparable damage or prejudice due to the existence of the examiner's alleged improper search and reasons for allowance in the above noted papers.

37 CFR 1.59 provides for the applicant's request for expungement of information in a patent application, other than the original papers upon which the filing date was granted. However, under the terms of the rule, petitioner "must ...establish to the satisfaction of the Director that the expungement of the information is appropriate..." See 37 CFR 1.59(b). Under the circumstances of this case, petitioner has not met his burden of proof.

The requested expungement of the contested Office communication would have the effect of vacating that action. However, the USPTO has long declined to vacate an Office action except in an instance where the examiner clearly lacked jurisdiction of the case at the time that the contested Office communication was issued. See Ex Parte Brunner, 1872 Dec. Comm'r Pat. 62,

63 (Comm'r Pat. 1872) (Commissioner vacating examiner's Office action which reopened prosecution as the examiner then lacked jurisdiction of the case). Merely because an applicant contends that a given action contains an improper rejection or requirement per se is not an adequate reason for deleting that action in its entirety from the administrative record, which the USPTO has long striven to maintain as complete and accurate as possible.

Indeed, expungement of an Office communication would only be justified where that Office communication contained inappropriate statements that were not suitable for retention in the administrative record. Cf. 37 CFR 1.3, which requires that applicants must conduct their business with the USPTO with decorum and courtesy. Even where expungement is warranted for an Office communication, a redacted version is maintained in the file; only the offensive language is removed.

While petitioner may disagree with some of the contents of the contested Office communication, the USPTO has also long held that a mere difference in opinion does not warrant expungement of part or all of a contested communication from the file record. See e.g., Ex Parte Fox, 1910 Dec. Commissioner Pat. 123 (Comm'r Pat. 1910). The MPEP makes clear that the expungement of record information should occur in very limited situations. See MPEP § 724.05. That particular section of the MPEP and referenced-sections (e.g., MPEP § 724.02) address the following types of information as subject (or susceptible) to possible expungement:

1) trade secret information;
2) proprietary information;
3) protective order material;
4) unintentionally-submitted information; and
5) information submitted in a wrong application.

The above situations are the only known types of circumstances which have led to information expungement. Clearly none of the above apply here. Petitioner has not alleged that the contested Office communication includes any trade secret, is proprietary in nature, is subject to a protective order, or contains language that is inconsistent with the USPTO's own requirement for courtesy and decorum in the written record. It is also evident that the information was not wrongly submitted, and the examiner had jurisdiction of the case at the time the contested communication was issued.

Accordingly, no adequate basis is given or apparent for expunging the contested Office communication, and the USPTO sees no reason to exercise its discretion to deviate from, or expand upon, the above long-established reasons for expungement. See, e.g., Saxbe v. Bustos, 419 U.S. 65, 74 (1974) (acknowledging an agency's right to maintain a "longstanding administrative construction"). This is particularly so in this instance since as recognized by petitioner, consideration of issues pertaining to the merits of a given rejection will not be entertained on petition. See 37 CFR 1.181(a); see also Boundy v. U.S. Patent & Trademark

Office, 73 USPQ2d 1468 (DC Eva 2004),appeal dismissed, 2004 U.S. App. LEXIS 26384 (Fed. Cir. 2004).

DECISION

For the reasons given above, the petition under 37 CFR 1.59 to expunge the papers of March 24, 2010, is dismissed.

In the alternative, petitioner requests this petition be entered into the file wrapper as Comments on the Reasons for Allowance.

The application is being forwarded to the Office of Data Management. This petition will be treated as Comments on the Reasons for Allowance as set forth in MPEP 1302.14(V).

Petitioner filed this petition with a petition fee of $400, however a petition under 37 CFR 1.59 requires a fee of on $200. The excess fee of $200 has been refunded to petitioner's deposit account.

Telephone inquiries relative to this decision should be directed to Carl Friedman at (571) 272-6842.

Carl Friedman
Petitions Examiner
Office of Petitions

UNITED STATES PATENT AND TRADEMARK OFFICE

Commissioner for Patents
United States Patent and Trademark Office
P.O. Box 1450
Alexandria, VA 22313-1450
www.uspto.gov

MAILED
AUG 02 2011
OFFICE OF PETITIONS

PHILIP S. JOHNSON
JOHNSON & JOHNSON
ONE JOHNSON & JOHNSON PLAZA
NEW BRUNSWICK NJ 08933-7003

In re Application of	:	DECISION ON REQUEST
John Voellmicke	:	FOR RECONSIDERATION OF
Patent Number: 7,909,833	:	PATENT TERM ADJUSTMENT
Issue Date: 03/22/2011	:	and
Application No. 10/673826	:	NOTICE OF INTENT TO ISSUE
Filing or 371(c) Date: 09/29/2003	:	CERTIFICATE OF CORRECTION
Attorney Docket Number:	:	
DEP-5164	:	

This is a decision on the petition filed on filed May 20, 2011, which is being treated as a petition under 37 CFR 1.705(d), requesting that the patent term adjustment indicated on the above-identified patent be corrected to indicate that the term of the above-identified patent is extended or adjusted by sixty-five (65) days.

The petition to correct the patent term adjustment indicated on the above-identified patent to indicate that the term of the above-identified patent is extended or adjusted by sixty-five (65) days is **GRANTED to the extent indicated herein.**

Patentees provide that this Office errantly calculated a reduction of 120 days in connection with the filing of a "Disclosure letter," after the mailing of the Notice of Allowance, and with payment of the issue fee. Applicants note that the disclosure letter is not a basis for reduction.

A review of Office records confirms that applicants filed a "Disclosure Letter Patent Term Adjustment Determination 37 CFR 1.705," in compliance with applicant's duty of good faith and candor, on July 1, 2010, along with the payment of the issue fee. The file history confirms that the Disclosure Letter was filed in compliance with applicant's duty of good faith and candor. A review of the application history further confirms that the Disclosure Letter was not otherwise filed under circumstances that constitute a failure to engage in reasonable efforts to conclude prosecution. The period of reduction of 120 days entered for the filing of the Disclosure Letter is not warranted and is being removed.

Office records also confirm that the Office erred in calculating a reduction in connection with the filing of reply to a Restriction Requirement on April 8, 2005, after filing an Amendment on March 11, 2005. The Restriction Requirement was mailed on March 31, 2005, and the reply was

timely filed on April 8, 2005. Yhe reduction pursuant to 37 CFR 1.704(c)(7) is in eror and has been removed.

A further review of the application file history reveals that Office also erred in calculating the reduction in connection with the abandonment of the application. Office records confirm that a petition to revive the application was granted in a Decision on petition mailed September 25, 2009. Pursuant to 37 CFR 1.704(c)(3), the period of delay begins on the date of abandonment – the day after the date on which the reply to the Office action was due, i.e. January 7, 2008 – and ending on the earlier of (i) the date of mailing of the decision reviving the application (i.e. September 25, 2009) or (ii) the date that is four months after the date the grantable petition to revive the application was filed (i.e. January 10, 2010). The period of reduction pursuant to 37 CFR 1.704(c) beginning on the date of abandonment of the application, January 7, 2008, and ending on the date of mailing of the decision reviving the application, September 25, 2009, is 628 days. A reduction of 628 days pursuant to 37 CFR 1.704(c)(3), is properly assessed to Patentees.

The Office will *sua sponte* issue a certificate of correction. Pursuant to 37 CFR 1.322, the Office will not issue a certificate of correction without first providing assignee or patentee an opportunity to be heard. Accordingly, patentees are given **one (1) month or thirty (30) days**, whichever is longer, from the mail date of this decision to respond. No extensions of time will be granted under § 1.136.

Nothing in this decision shall be construed as a waiver of the requirement of 35 U.S.C. 154(b)(4) that any civil action by an applicant dissatisfied with a determination made by the Director under 35 U.S.C. 154(b)(3) be filed in the United States District Court for the District of Columbia within 180 days after the grant of the patent.

The Office acknowledges submission of the $200.00 fee set forth in 37 CFR 1.18(e). No additional fees are required.

The application is being forwarded to the Certificate of Corrections Branch for issuance of a certificate of correction. The Office will issue a certificate of correction indicating that the term of the above-identified patent is extended or adjusted by zero **(0)** days (adjustments of 479 days (141 days + 133 days + 122 days + 83 days) less reductions of 780 days (53 days + 99 days + 628 days)).

Telephone inquiries specific to this matter should be directed to Attorney Derek Woods, at (571) 272-3232.

/DLW/

Derek L. Woods
Attorney
Office of Petitions

Enclosure: Copy of DRAFT Certificate of Correction

UNITED STATES PATENT AND TRADEMARK OFFICE

CERTIFICATE OF CORRECTION

PATENT : 7,909,833 B2

DATED : **March 22, 2011**

INVENTOR(S) : Voellmicke

It is certified that error appears in the above-identified patent and that said Letters Patent is hereby corrected as shown below:

On the cover page,

[*] Notice: Subject to any disclaimer, the term of this patent is extended or adjusted under 35 USC 154(b) by 50 days.

Delete the phrase "by 50 days" and insert – by 0 days--

UNITED STATES PATENT AND TRADEMARK OFFICE

UNITED STATES DEPARTMENT OF COMMERCE
United States Patent and Trademark Office
Address: COMMISSIONER FOR PATENTS
P.O. Box 1450
Alexandria, Virginia 22313-1450
www.uspto.gov

Docket Administrator - Room 3D-201E
Alcatel-Lucent USA Inc.
600-700 Mountain Avenue
Murray Hill, NJ 07974

Mail Date: 08/04/2010

Applicant	: Mohammad Hossein Zarrabizadeh	: DECISION ON REQUEST FOR
Patent Number	: 7646881	: RECALCULATION of PATENT
Issue Date	: 01/12/2010	: TERM ADJUSTMENT IN VIEW
Application No	: 10/673,894	: OF WYETH AND NOTICE OF INTENT TO
Filed	: 09/29/2003	: ISSUE CERTIFICATE OF CORRECTION
		:

The Request for Recalculation is **GRANTED** to the extent indicated.

The patent term adjustment has been determined to be **1525** days. The USPTO will *sua sponte* issue a certificate of correction reflecting the amount of PTA days determined by the recalculation.

Prior to the issuance of the certificate of correction, the USPTO will afford patentee an opportunity to be heard and request reconsideration. Accordingly, patentee has **one month or thirty (30) days**, whichever is longer, to file a request for reconsideration of this patent term adjustment calculation. See 35 U.S.C. 154(b)(3)(B)(ii) and 37 CFR 1.322(a)(4). No extensions of time will be granted under 37 CFR 1.136.

Patentee should use document code PET.OP if electronically filing a request for reconsideration of this patent term adjustment calculation. The patentee must also include the information required by 37 CFR 1.705(b)(2) and the fee required by 37 CFR 1.18(e). If patentee does not file a timely request for reconsideration of this patent term adjustment calculation including the information required by 37 CFR 1.705(b)(2) and the fee required by 37 CFR 1.18(e), the USPTO will issue a certificate of correction reflecting the PTA determination noted above.

Patentee should be aware that in order to preserve the right to review in the United States District Court for the District of Columbia of the USPTO patent term adjustment determination, patentee must ensure that he or she also take the steps required under 35 U.S.C. 154(b)(4)(A) in a timely manner. Nothing in the request for recalculation should be construed as providing an alternative time frame for commencing a civil action under 35 U.S.C. 154(b)(4)(A).

Any questions concerning this decision should be directed to the Office of Patent Legal Administration at 571-272-7702.

UNITED STATES PATENT AND TRADEMARK OFFICE

Commissioner for Patents
United States Patent and Trademark Office
P.O. Box 1450

ROBERT W STROZIER, P.L.L.C
PO BOX 429
BELLAIRE TX 77402-0429

MAILED

APR 22 2011

OFFICE OF PETITIONS

In re Patent No. 7,065,967	:	
Issue Date: June 27, 2006	:	
Application No. 10/674,073	:	ON PETITION
Filed: September 29, 2003	:	
Attorney Docket No. 02019/07UTL	:	

This is a decision on the petition under 37 CFR 1.378(c), filed February 18, 2011, to accept the unintentionally delayed payment of a maintenance fee for the above-identified patent.

The petition is **GRANTED.**

The patent expired on June 28, 2010 for failure to pay the 3 ½ year maintenance fee. Since this petition was submitted within twenty-four months after the six-month grace period provided in 37 CFR 1.362(e), the petition is timely filed under the provisions of 37 CFR 1.378(c).

The maintenance fee is hereby accepted and the above-identified patent is reinstated as of the mail date of this decision.

Telephone inquiries relating to this decision should be directed to Robert DeWitty, Petitions Examiner, Office of Petitions (571-272-8427).

Ramesh Krishnamurthy

for David Bucci
Petitions Examiner
Office of Petitions

UNITED STATES PATENT AND TRADEMARK OFFICE

Commissioner for Patents
United States Patent and Trademark Office
P.O. Box 1450
Alexandria, VA 22313-1450
www.uspto.gov

Decision Date : April 26,2011

In re Application of :

Peter Danko

Application No : 10674417

Filed : 01-Oct-2003

Attorney Docket No : 046201-0109

DECISION ON PETITION

UNDER CFR 1.137(b)

This is an electronic decision on the petition under 37 CFR 1.137(b), filed April 26,2011 , to revive the above-identified application.

The petition is **GRANTED.**

The above-identified application became abandoned for failure to reply in a timely manner to the Notice of Allowance and Issue Fee(s) Due. The date of abandonment is the day after the expiration date of the period set for reply in the Notice.

The electronic petition satisfies the conditions for revival pursuant to the provisions of 37 CFR 1.137(b) in that (1) the reply in the form of payment of the Issue Fee and the Publication Fee (if necessary); (2) the petition fee as set forth in 37 CFR 1.17 (m); (3) the drawing correction and/or other deficiencies (if necessary); and (4) the required statement of unintentional delay have been received. Accordingly, the Issue Fee payment is accepted as having been unintentionally delayed.

It is not apparent whether the person signing the statement of unintentional delay was in a position to have firsthand or direct knowledge of the facts and circumstances of the delay at issue. Nevertheless, such statement is being treated as having been made as the result of a reasonable inquiry into the facts and circumstances of such delay. See 37 CFR 10.18(b) and Changes to Patent Practice and Procedure; Final Rule Notice, 62 Fed. Reg. 53131, 53178 (October 10, 1997), 1203 Off. Gaz. Pat. Office 63, 103 (October 21, 1997). In the event that such an inquiry has not been made, petitioner must make such an inquiry. If such inquiry results in the discovery that it is not correct that the entire delay in filing the required reply from the due date for the reply until the filing of a grantable petition pursuant to 37 CFR 1.137(b) was unintentional, petitioner must notify the Office.

Telephone inquiries concerning this decision should be directed to the Patent Electronic Business Center (EBC) at 866-217-9197.

This application file is being directed to the Office of Patent Publication.

Office of Petitions

Doc Code: PET.AUTO Document Description: Petition automatically granted by EFS-Web	PTO/SB/64 U.S. Patent and Trademark Office Department of Commerce

Electronic Petition Request	PETITION FOR REVIVAL OF AN APPLICATION FOR PATENT ABANDONED UNINTENTIONALLY UNDER 37 CFR 1.137(b)
Application Number	10674417
Filing Date	01-Oct-2003
First Named Inventor	Peter Danko
Art Unit	1791
Examiner Name	CHRISTOPHER SCHATZ
Attorney Docket Number	046201-0109
Title	METHOD AND APPARATUS FOR CLOSING AN OPEN END OF A PRODUCT, AND PRODUCT FORMED THEREBY

The above-identified application became abandoned for failure to file a timely and proper reply to a notice or action by the United States Patent and Trademark Office. The date of abandonment is the day after the expiration date of the period set for reply in the office notice or action plus any extensions of time actually obtained.

APPLICANT HEREBY PETITIONS FOR REVIVAL OF THIS APPLICATION

NOTE: A grantable petition requires the following items:
(1) Petition fee;
(2) Reply and/or issue fee;
(3) Terminal disclaimer with disclaimer fee – required for all utility and plant applications filed before June 8, 1995; and for all design applications;
(4) Statement that the entire delay was unintentional.

Petition fee
The petition fee under 37CFR 1.17(m) is attached.

☐ Applicant claims SMALL ENTITY status. See 37 CFR 1.27.

☐ Applicant is no longer claiming SMALL ENTITY status. See 37 CFR 1.27(g)(2).

☒ Applicant(s) status remains as SMALL ENTITY.

☐ Applicant(s) status remains as other than SMALL ENTITY.

Issue Fee and Publication Fee :

Issue Fee and Publication Fee must accompany ePetition.

☒ Issue Fee Transmittal is attached

Drawing corrections and/ or other deficiencies.

- (●) Drawing corrections and/ or other deficiencies are not required
- ( ) I certify, in accordance with 37 CFR 1.4.(D)(4), that drawing corrections and/ or other deficiencies have previously been filed on
- ( ) Drawing corrections and/ or other deficiencies are attached.
- [x] STATEMENT: The entire delay in filing the required reply from the due date for the required reply until the filing of a grantable petition under 37 CFR 1.137(b) was unintentional.

THIS PORTION MUST BE COMPLETED BY THE SIGNATORY OR SIGNATORIES

I certify, in accordance with 37 CFR 1.4(d)(4) that I am:

- ( ) An attorney or agent registered to practice before the Patent and Trademark Office who has been given power of attorney in this application.
- (●) An attorney or agent registered to practice before the Patent and Trademark Office, acting in a representative capacity.
- ( ) A sole inventor
- ( ) A joint inventor; I certify that I am authorized to sign this submission on behalf of all of the inventors.
- ( ) A joint inventor; all of whom are signing this e-petition.
- ( ) The assignee of record of the entire interest that has properly made itself of record pursuant to 37 CFR 3.71.

Signature	/Seth A. Watkins/
Name	Seth A. Watkins
Registration Number	47169

UNITED STATES PATENT AND TRADEMARK OFFICE

Commissioner for Patents
United States Patent and Trademark Office
P.O. Box 1450
Alexandria, VA 22313-1450
www.uspto.gov

PERKINS COIE LLP
P.O. BOX 1208
SEATTLE, WA 98111-1208

MAILED
MAY 09 2011
OFFICE OF PETITIONS

In re Patent No. 7,116,324	:	ON PETITION
Issue Date: October 3, 2006	:	
Application No. 10/674,688	:	
Filed: September 30, 2003	:	
Attorney Docket No. 76882-8006.US01	:	

This is a notice regarding your request for acceptance of a fee deficiency submission under 37 CFR 1.28, filed April 18, 2011.

The Office no longer investigates or rejects original or reissue patent under 37 CFR 1.56. **1098 Off. Gaz. Pat. Office 502 (January 3, 1989)**. Therefore, nothing in this Notice is intended to imply that an investigation was done.

Your fee deficiency submission under 37 CFR 1.28 is hereby **ACCEPTED**.

This patent is no longer entitled to small entity status. Accordingly, all future fees paid in this patent must be paid at the large entity rate.

Telephone inquiries concerning this decision should be directed to the undersigned at (571) 272-6059.

A. Kelley Collier

Alicia Kelley-Collier
Petitions Examiner
Office of Petitions

PTO/SB/66 (03-09)
Approved for use through 03/31/2012. OMB 0651-0016
U.S. Patent and Trademark Office: U.S. DEPARTMENT OF COMMERCE
Under the Paperwork Reduction Act of 1995, no persons are required to respond to a collection of information unless it displays valid OMB control number.

PETITION TO ACCEPT UNINTENTIONALLY DELAYED PAYMENT OF MAINTENANCE FEE IN AN EXPIRED PATENT (37 CFR 1.378(c))

Patent Number	Issue Date (YYYY-MM-DD)	Application Number	Filing Date (YYYY-MM-DD)	Docket Number (if applicable)
7,138,255	2006-11-21	10674750	2003-09-30	5171-00013

CAUTION: Maintenance fee (and surcharge, if any) payment must correctly identify: (1) the patent number and (2) the application number of the actual U.S. application leading to issuance of that patent to ensure the fee(s) is/are associated with the correct patent. 37 CFR 1.366(c) and (d).

SMALL ENTITY
☒ Patentee claims, or has previously claimed, small entity status. See 37 CFR 1.27.

LOSS OF ENTITLEMENT TO SMALL ENTITY STATUS
☐ Patentee is no longer entitled to small entity status. See 37 CFR 1.27(g)

NOT Small Entity		Small Entity	
Fee	Code	Fee	Code
○ 3 ½ year	(1551)	● 3 ½ year	(2551)
○ 7 ½ year	(1552)	○ 7 ½ year	(2552)
○ 11 ½ year	(1553)	○ 11 ½ year	(2553)

SURCHARGE
The surcharge required by 37 CFR 1.20(i)(2) (Fee Code 1558) must be paid as a condition of accepting unintentionally delayed payment of the maintenance fee.

MAINTENANCE FEE (37 CFR 1.20(e)-(g))
The appropriate maintenance fee must be submitted with this petition.

STATEMENT
THE UNDERSIGNED CERTIFIES THAT THE DELAY IN PAYMENT OF THE MAINTENANCE FEE TO THIS PATENT WAS UNINTENTIONAL

PETITIONER(S) REQUEST THAT THE DELAYED PAYMENT OF THE MAINTENANCE FEE BE ACCEPTED AND THE PATENT REINSTATED

THIS PORTION MUST BE COMPLETED BY THE SIGNATORY OR SIGNATORIES

37 CFR 1.378(d) states: "Any petition under this section must be signed by an attorney or agent registered to practice before the Patent and Trademark Office, or by the patentee, the assignee, or other party in interest."

I certify, in accordance with 37 CFR 1.4(d)(4) that I am

- ● An attorney or agent registered to practice before the Patent and Trademark Office
- ○ A sole patentee
- ○ A joint patentee; I certify that I am authorized to sign this submission on behalf of all the other patentees.
- ○ A joint patentee; all of whom are signing this e-petition
- ○ The assignee of record of the entire interest

Under the Paperwork Reduction Act of 1995, no persons are required to respond to a collection of information unless it displays valid OMB control number.

Patent Practitioner			
A signature of the applicant or representative is required in accordance with 37 CFR 1.33 and 10.18. Please see 37 CFR 1.4(d) for the form of the signature			
Signature	/Christopher M. Scherer/	Date (YYYY-MM-DD)	2011-04-26
Name	Christopher M. Scherer	Registration Number	50655

This collection of information is required by 37 CFR 1.378(c). The information is required to obtain or retain a benefit by the public which is to file (and by the USPTO to process) an application. Confidentiality is governed by 35 U.S.C. 122 and 37 CFR 1.11 and 1.14. This collection is estimated to take 1 hour to complete, including gathering, preparing, and submitting the completed application form to the USPTO. Time will vary depending upon the individual case. Any comments on the amount of time you require to complete this form and/ or suggestions for reducing this burden, should be sent to the Chief Information Officer, U.S. Patent and Trademark Office, U.S. Department of Commerce, P.O. Box 1450, Alexandria, VA 22313-1450. DO NOT SEND FEES OR COMPLETED FORMS TO THIS ADDRESS. **This form can only be used when in conjunction with EFS-Web. If this form is mailed to the USPTO, it may cause delays in reinstating the patent.**

Privacy Act Statement

The Privacy Act of 1974 (P.L. 93-579) requires that you be given certain information in connection with your submission of the attached form related to a patent application or patent. Accordingly, pursuant to the requirements of the Act, please be advised that: (1) the general authority for the collection of this information is 35 U.S.C. 2(b)(2); (2) furnishing of the information solicited is voluntary; and (3) the principal purpose for which the information is used by the U.S. Patent and Trademark Office is to process and/or examine your submission related to a patent application or patent. If you do not furnish the requested information, the U.S. Patent and Trademark Office may not be able to process and/or examine your submission, which may result in termination of proceedings or abandonment of the application or expiration of the patent.

The information provided by you in this form will be subject to the following routine uses:

1. The information on this form will be treated confidentially to the extent allowed under the Freedom of Information Act (5 U.S.C. 552) and the Privacy Act (5 U.S.C. 552a). Records from this system of records may be disclosed to the Department of Justice to determine whether the Freedom of Information Act requires disclosure of these records.

2. A record from this system of records may be disclosed, as a routine use, in the course of presenting evidence to a court, magistrate, or administrative tribunal, including disclosures to opposing counsel in the course of settlement negotiations.

3. A record in this system of records may be disclosed, as a routine use, to a Member of Congress submitting a request involving an individual, to whom the record pertains, when the individual has requested assistance from the Member with respect to the subject matter of the record.

4. A record in this system of records may be disclosed, as a routine use, to a contractor of the Agency having need for the information in order to perform a contract. Recipients of information shall be required to comply with the requirements of the Privacy Act of 1974, as amended, pursuant to 5 U.S.C. 552a(m).

5. A record related to an International Application filed under the Patent Cooperation Treaty in this system of records may be disclosed, as a routine use, to the International Bureau of the World Intellectual Property Organization, pursuant to the Patent Cooperation Treaty.

6. A record in this system of records may be disclosed, as a routine use, to another federal agency for purposes of National Security review (35 U.S.C. 181) and for review pursuant to the Atomic Energy Act (42 U.S.C. 218(c)).

7. A record from this system of records may be disclosed, as a routine use, to the Administrator, General Services, or his/her designee, during an inspection of records conducted by GSA as part of that agency's responsibility to recommend improvements in records management practices and programs, under authority of 44 U.S.C. 2904 and 2906. Such disclosure shall be made in accordance with the GSA regulations governing inspection of records for this purpose, and any other relevant (i.e., GSA or Commerce) directive. Such disclosure shall not be used to make determinations about individuals.

8. A record from this system of records may be disclosed, as a routine use, to the public after either publication of the application pursuant to 35 U.S.C. 122(b) or issuance of a patent pursuant to 35 U.S.C. 151. Further, a record may be disclosed, subject to the limitations of 37 CFR 1.14, as a routine use, to the public if the record was filed in an application which became abandoned or in which the proceedings were terminated and which application is referenced by either a published application, an application open to public inspections or an issued patent.

9. A record from this system of records may be disclosed, as a routine use, to a Federal, State, or local law enforcement agency, if the USPTO becomes aware of a violation or potential violation of law or regulation.

UNITED STATES PATENT AND TRADEMARK OFFICE

Commissioner for Patents
United States Patent and Trademark Office
P.O. Box 1450
Alexandria, VA 22313-1450
www.uspto.gov

In re Patent No. 7138255
Issue Date: November 21,2006
Application No. 10674750
Filed: September 30,2003
Attorney Docket No. 5171-00013

:
:DECISION GRANTING PETITION
:UNDER 37 CFR 1.378(c)
:

This is a decision on the electronic petition, filed April 26,2011 ,under 37 CFR 1.378(c) to accept the unintentionally delayed payment of the 3.5 year maintenance fee for the above-identified patent.

The petition is **GRANTED**.

The maintenance fee is accepted, and the above-identified patent reinstated as of April 26,2011 .
This decision also constitutes notice that the fee has been accepted. An electronic copy of the petition and this decision has been created as an entry in the Image File Wrapper. Nevertheless, petitioner should print and retain an independent copy.

Telephone inquiries related to this electronic decision should be directed to the Electronic Business Center at 1-866-217-9197.

UNITED STATES PATENT AND TRADEMARK OFFICE

Commissioner for Patents
United States Patent and Trademark Office
P.O. Box 1450
Alexandria, VA 22313-1450
www.uspto.gov

PATENTS ON DEMAND, P.A. IBM-RSW
4581 WESTON ROAD
SUITE 345
WESTON, FL 33331

MAILED

JUN 13 2011

OFFICE OF PETITIONS

In re Application of
Jerry Waikit Tsui, et al.
Application No. 10/674,778
Filed: September 30, 2003
Attorney Docket No. CA920020061US1

DECISION ON PETITION

This is a decision on the petition under the unintentional provisions of 37 CFR 1.137(b), filed May 10, 2011, to revive the above-identified application.

The application became abandoned for failure to reply in a timely manner to the Notice of Non-compliant Amendment mailed, November 2, 2010, which set a shortened statutory period for reply of one (1) month. No extensions of time under the provisions of 37 CFR 1.136(a) were obtained. Accordingly, the application became abandoned on December 3, 2010.

The petition satisfies the requirements of 37 CFR 1.137(b) in that petitioner has supplied (1) the reply in the form of a amendment, (2) the petition fee of 1620, and (3) a proper statement of unintentional delay.

In view of the above, the petition is **GRANTED**.

Telephone inquiries concerning this decision should be directed to undersigned at (571) 272-1642. All other inquiries concerning the examination or status of this application should be directed to the Technology Center.

This application is being referred to Technology Center AU 3694 for appropriate action by the Examiner in the normal course of business on the reply received May 10, 2011.

April M. Wise
Petitions Examiner
Office of Petitions

UNITED STATES PATENT AND TRADEMARK OFFICE

Commissioner for Patents
United States Patent and Trademark Office
P.O. Box 1450
Alexandria, VA 22313-1450
www.uspto.gov

SCHWEGMAN, LUNDBERG & WOESSNER, P.A.
P.O. BOX 2938
MINNEAPOLIS MN 55402

MAILED
MAR 28 2011
OFFICE OF PETITIONS

In re Patent of Starkston et al.	:	DECISION ON REQUEST
Patent No. 7,772,090	:	FOR RECONSIDERATION OF
Issue Date: August 10, 2010	:	PATENT TERM ADJUSTMEN
Application No. 10/674,960	:	and
Filed: September 30, 2003	:	NOTICE OF INTENT TO ISSUE
Attorney Docket No. 884.949US1	:	CERTIFICATE OF CORRECTION

This is a decision on the petition under 37 C.F.R. 1.705(d), filed October 12, 2010. Patentees request that the patent term adjustment indicated in the patent be corrected from one thousand two hundred seventy (1270) days to one thousand six hundred twenty-eight (1628) days.

The petition to correct the patent term adjustment indicated on the above-identified patent to indicate that the term of the above-identified patent is extended or adjusted to one thousand six hundred twenty-eight (1628) days is **granted to the extent indicated herein.**

On August 10, 2010, the above-identified application matured into U.S. Patent No. 7,772,090. The instant request for reconsideration filed October 12, 2010 was timely filed within 2 months of the date the patent issued. See § 1.705(d). October 11, 2010 was a federal holiday. The Patent issued with a revised Patent Term Adjustment of 1270 days.

Patentees assert the Office failed to enter two additional periods of adjustment that occurred during the appellate period. The total of these asserted adjustments (330 is the number of days that is asserted) does not equal the amount of time that patentees desire to be added to the existing patent term adjustment. (It is noted that the number of days between November 24, 2007 and March 7, 2008 is not 321, as asserted by patentees, but rather 105 days.) Patentees have not provided an explanation of how their proposed 1628 day patent term adjustment is derived.

Nevertheless, the Office will address the petition and explain the correct patent term adjustment.

Office delay under 35 U.S.C. § 154(b)(1)(A) ("A Delay")is 301 days, which includes a new adjustment under 37 CFR 1.702(a)(2). A 34 day period of adjustment should be entered pursuant to 37 CFR 703(a)(5) for the delay in mailing a Notice of Allowance on April 5, 2010. On September 9, 2009, the Office mailed a BPAI decision where at least one allowable claim remained in the application. On November 2, 2009, applicants filed an additional amendment/argument and requested the Office reopen prosecution. On April 5, 2010, the Office mailed a Notice of Allowance. Accordingly, pursuant to 37 CFR 1.703(a)(2), a period of adjustment of 34 days is being entered for the period beginning on March 3, 2010, the day after four months after a reply to the BPAI decision was mailed, and ending on April 5, 2010, the date the Notice of Allowance was mailed.

Patentees argue there are two additional adjustments that occurred during the appellate period. First, patentees argue the Office should be charged with a 9 day period of adjustment because the Office failed to respond within four months to an appeal brief that was filed on February 12, 2007. Second, patentees argue the Office should be charged with a 105 day period of adjustment because the Office took 4 months and 105 days to mail an examiner's answer in response to the appeal brief, filed July 23, 2007.

With respect to patentees' first argument, the phrase "the date on which an "appeal was taken" in 35 U.S.C. 154(b)(1)(A)(ii) means the date on which an appeal brief was filed. The phrase "appeal brief in compliance with 37 CFR 1.192) requires that" (1) the appeal brief fee be paid; and (2) the appeal brief complies with 37 CFR 1.192(c)(1) through (c)(9). In other words, the appeal brief must be in compliance in order for the Office's period to take action under 37 CFR 1.702(a)(2) to run. In this instance, the February 12, 2007 appeal brief was defective. A compliant appeal brief was not filed until November 23, 2007. Therefore, no adjustment is warranted. Patentees are informed that even if the Office's period for action had been running, that the reduction would have been subsumed within the 1092 day adjustment for successful appeal.

Patentees' second argument is not well taken, either because a 105 day adjustment, not a 330 day adjustment as patentees argue, under 37 CFR 1.702(a)(2) for the delay in mailing an examiner's

answer on March 7, 2008 to the compliant appeal brief, filed July 23, 2007, is subsumed within the 1092 day adjustment for successful appeal.

The total A Delay is 301 (267 + 34) days.

Office delay under 35 U.S.C. § 154(b)(1)(B) ("B Delay") is 284 days. The maximum B Delay period begins on October 1, 2006, which is one day after three years after the filing of the application on September 30, 2003, and ends on August 10, 2010, when the patent issued, and is 1410 days.

As stated in 35 U.S.C. 154(b)(1)(B)(ii), B delay does not include "any time consumed by appellate review by the Board of Patent Appeals and Interferences." The period of B delay does not include the 1092 day period beginning on September 14, 2006, the date the Notice of Appeal was filed, and ending on September 9, 2009, the date the Board of Patent Appeals and Interferences issued a decision reversing the examiner in part. Excluding the 1092 days consumed by appellate review, and the 34 days of overlap (see discussion above of new ground for adjustment above) results in a period of B delay of 284 days (1410 - 1092 - 34).

Although the 1092 days consumed by appellate review is not part of the period of B delay, the 1092 days does constitute delay under 35 U.S.C. 154(b)(1)(C) ("C delay"). In other words, the successful appellate period of 1092 days is counted against the Office as a separate adjustment pursuant to 37 CFR 1.702(e) as C delay.

The period of Applicant Delay is 89 days.

In light thereof, the correct patent term adjustment is one thousand five hundred eighty-eight (1588) days, which is 301 (267 + 34) days of delay under 35 U.S.C. 154(b)(1)(A) + 284 days of delay under 35 U.S.C. 154(b)(1)(B) + 1092 days successful appeal period under 37 CFR 1.702(e) minus 89 days of Applicant Delay.

The Office will *sua sponte* issue a certificate of correction. Pursuant to 37 CFR 1.322, the Office will not issue a certificate of correction without first providing assignee or patentee an opportunity to be heard. Accordingly, patentees are given **one (1) month or thirty (30) days**, whichever is longer, from the mail date of this decision to respond. No extensions of time will be granted under § 1.136.

Nothing in this decision shall be construed as a waiver of the requirement of 35 U.S.C. 154(b)(4) that any civil action by an applicant dissatisfied with a determination made by the Director under 35 U.S.C. 154(b)(3) be filed in the United States District Court for the District of Columbia within 180 days after the grant of the patent.

The Office acknowledges submission of the $200.00 fee set forth in 37 CFR 1.18(e). No additional fees are required.

The application is being forwarded to the Certificates of Branch for issuance of a certificate of correction. The Office will issue a certificate of correction indicating that the term of the above-identified patent is extended or adjusted by **one thousand five hundred eighty-eight (1588)** days.

Telephone inquiries specific to this matter should be directed to the undersigned at (571) 272-3230.

Shirene Willis Brantley

Shirene Willis Brantley
Senior Petitions Attorney
Office of Petitions

Enclosure: Copy of DRAFT Certificate of Correction

UNITED STATES PATENT AND TRADEMARK OFFICE

CERTIFICATE OF CORRECTION

PATENT : 7,772,090 B2

DATED : **August 10, 2010** **DRAFT**

INVENTOR(S) : Starkston et al.

It is certified that error appears in the above-identified patent and that said Letters Patent is hereby corrected as shown below:

On the cover page,

[*] Notice: Subject to any disclaimer, the term of this patent is extended or adjusted under 35 U.SC. 154(b) by 1270 days

Delete the phrase "by 1270 days" and insert – by 1588 days--

UNITED STATES PATENT AND TRADEMARK OFFICE

Commissioner for Patents
United States Patent and Trademark Office
P.O. Box 1450
Alexandria, VA 22313-1450
www.uspto.gov

MAILED
AUG 24 2011
OFFICE OF PETITIONS

SCHWEGMAN,LUNDBERG & WOESSNER,P.A.
P.O. BOX 2938
MINNEAPOLIS MN 55402

In re Patent of Starkston et al.	:	DECISION ON REQUEST
Patent No. 7,772,090	:	FOR RECONSIDERATION OF
Issue Date: August 10, 2010	:	PATENT TERM ADJUSTMEN
Application No. 10/674,960	:	and
Filed: September 30, 2003	:	NOTICE OF INTENT TO ISSUE
Attorney Docket No. 884.949US1	:	CERTIFICATE OF CORRECTION

This is a decision on the renewed petition under 37 C.F.R. 1.705(d), filed April 20, 2011. Patentees request that the patent term adjustment indicated in the patent be corrected to one thousand six hundred sixteen (1616) days.

The petition is **granted**.

On August 10, 2010, the above-identified application matured into U.S. Patent No. 7,772,090. A timely request for reconsideration of the PTA, filed October 12, 2010, was granted in part on March 28, 2011. Patentees were afforded a one month/30 day period from the mailing date of the decision to file a renewed petition. The present renewed petition was timely filed on April 20, 2011.

Patentees dispute the length of reduction assessed in connection with the filing of a Rule 312 amendment on June 21, 2010. It is undisputed that a Rule 312 amendment was filed after the mailing of the Notice of Allowance. This was properly a basis for reduction of PTA pursuant to § 1.704(c)(10).

37 CFR § 1.704(c)(10) provides that:

Submission of an amendment under § 1.312 or other paper after a notice of allowance has been given or mailed, in which case the period of adjustment set forth in § 1.703 shall be reduced by the lesser of:

(i) The number of days, if any, beginning on the date the amendment under § 1.312 or other paper was filed and ending

on the mailing date of the Office action or notice in response to the amendment under § 1.312 or such other paper;

or

(ii) Four months

Applicants filed a Rule 312 amendment on June 21, 2010. The Office mailed a Response to the Rule 312 Communication on July 13, 2010. Patentees are correct that the period of reduction of 51 days is not warranted. Under the circumstances, the period of reduction is properly calculated as twenty-three (23) days, counting the number of days in the period beginning on the date the Rule 312 amendment was filed, June 21, 2010, and ending on July 13, 2010, the date the Office mailed a Response to Rule 312 Communication. Accordingly, the 51 day reduction is being removed and a 23 day reduction is being entered in connection with the filing of the Rule 312 amendment on June 21, 2010.

In light thereof, the correct patent term adjustment is one thousand six hundred sixteen (1616) days, which is 301 (267 + 34) days of delay under 35 U.S.C. 154(b)(1)(A) + 284 days of delay under 35 U.S.C. 154(b)(1)(B) + 1092 days successful appeal period under 37 CFR 1.702(e) minus 61 days of Applicant Delay.

The Office acknowledges previous submission of the $200.00 fee set forth in 37 CFR 1.18(e) on October 12, 2010. No additional fees are required.

The application is being forwarded to the Certificates of Branch for issuance of a certificate of correction. The Office will issue a certificate of correction indicating that the term of the above-identified patent is extended or adjusted by **one thousand six hundred sixteen (1616)** days.

Telephone inquiries specific to this matter should be directed to the undersigned at (571) 272-3230.

Shirene Willis Brantley

Shirene Willis Brantley
Senior Petitions Attorney
Office of Petitions

Enclosure: Copy of DRAFT Certificate of Correction

UNITED STATES PATENT AND TRADEMARK OFFICE

CERTIFICATE OF CORRECTION

PATENT : 7,772,090 B2

DATED : **August 10, 2010** **DRAFT**

INVENTOR(S) : Starkston et al.

It is certified that error appears in the above-identified patent and that said Letters Patent is hereby corrected as shown below:

On the cover page,

[*] Notice: Subject to any disclaimer, the term of this patent is extended or adjusted under 35 U.S.C. 154(b) by 1588 days

Delete the phrase "by 1588 days" and insert – by 1616 days--

UNITED STATES PATENT AND TRADEMARK OFFICE

UNITED STATES DEPARTMENT OF COMMERCE
United States Patent and Trademark Office
Address: COMMISSIONER FOR PATENTS
P.O. Box 1450
Alexandria, Virginia 22313-1450
www.uspto.gov

DENIRO/RAMBUS
575 MARKET STREET
SUITE 2500
SAN FRANCISCO, CA 94105

Mail Date: 08/20/2010

Applicant	: Dennis Kim	: DECISION ON REQUEST FOR
Patent Number	: 7668271	: RECALCULATION of PATENT
Issue Date	: 02/23/2010	: TERM ADJUSTMENT IN VIEW
Application No	: 10/675,027	: OF WYETH AND NOTICE OF INTENT TO
Filed	: 09/30/2003	: ISSUE CERTIFICATE OF CORRECTION
		:

The Request for Recalculation is **GRANTED** to the extent indicated.

The patent term adjustment has been determined to be **772** days. The USPTO will *sua sponte* issue a certificate of correction reflecting the amount of PTA days determined by the recalculation.

Prior to the issuance of the certificate of correction, the USPTO will afford patentee an opportunity to be heard and request reconsideration. Accordingly, patentee has **one month or thirty (30) days**, whichever is longer, to file a request for reconsideration of this patent term adjustment calculation. See 35 U.S.C. 154(b)(3)(B)(ii) and 37 CFR 1.322(a)(4). No extensions of time will be granted under 37 CFR 1.136.

Patentee should use document code PET.OP if electronically filing a request for reconsideration of this patent term adjustment calculation. The patentee must also include the information required by 37 CFR 1.705(b)(2) and the fee required by 37 CFR 1.18(e). If patentee does not file a timely request for reconsideration of this patent term adjustment calculation including the information required by 37 CFR 1.705(b)(2) and the fee required by 37 CFR 1.18(e), the USPTO will issue a certificate of correction reflecting the PTA determination noted above.

Patentee should be aware that in order to preserve the right to review in the United States District Court for the District of Columbia of the USPTO patent term adjustment determination, patentee must ensure that he or she also take the steps required under 35 U.S.C. 154(b)(4)(A) in a timely manner. Nothing in the request for recalculation should be construed as providing an alternative time frame for commencing a civil action under 35 U.S.C. 154(b)(4)(A).

Any questions concerning this decision should be directed to the Office of Patent Legal Administration at 571-272-7702.

UNITED STATES PATENT AND TRADEMARK OFFICE

Commissioner for Patents
United States Patent and Trademark Office
P.O. Box 1450
Alexandria, VA 22313-1450
www.uspto.gov

In re Patent No. 7321609
Issue Date: January 22,2008
Application No. 10675185
Filed: September 30,2003
Attorney Docket No. 400.0005.U1(US)

:
:DECISION GRANTING PETITION
:UNDER 37 CFR 1.378(c)
:

This is a decision on the electronic petition, filed March 7,2012 ,under 37 CFR 1.378(c) to accept the unintentionally delayed payment of the 3.5 year maintenance fee for the above-identified patent.

The petition is **GRANTED**.

The maintenance fee is accepted, and the above-identified patent reinstated as of March 7,2012 .
This decision also constitutes notice that the fee has been accepted. An electronic copy of the petition and this decision has been created as an entry in the Image File Wrapper. Nevertheless, petitioner should print and retain an independent copy.

Telephone inquiries related to this electronic decision should be directed to the Electronic Business Center at 1-866-217-9197.

PTO/SB/66 (03-09)
Approved for use through 03/31/2012. OMB 0651-0016
U.S. Patent and Trademark Office: U.S. DEPARTMENT OF COMMERCE
Under the Paperwork Reduction Act of 1995, no persons are required to respond to a collection of information unless it displays valid OMB control number.

PETITION TO ACCEPT UNINTENTIONALLY DELAYED PAYMENT OF MAINTENANCE FEE IN AN EXPIRED PATENT (37 CFR 1.378(c))

Patent Number	Issue Date (YYYY-MM-DD)	Application Number	Filing Date (YYYY-MM-DD)	Docket Number (if applicable)
7321609	2008-01-22	10675185	2003-09-30	400.0005U1US

CAUTION: Maintenance fee (and surcharge, if any) payment must correctly identify: (1) the patent number and (2) the application number of the actual U.S. application leading to issuance of that patent to ensure the fee(s) is/are associated with the correct patent. 37 CFR 1.366(c) and (d).

SMALL ENTITY
☐ Patentee claims, or has previously claimed, small entity status. See 37 CFR 1.27.

LOSS OF ENTITLEMENT TO SMALL ENTITY STATUS
☐ Patentee is no longer entitled to small entity status. See 37 CFR 1.27(g)

NOT Small Entity			Small Entity		
	Fee	Code		Fee	Code
◉	3 ½ year	(1551)	○	3 ½ year	(2551)
○	7 ½ year	(1552)	○	7 ½ year	(2552)
○	11 ½ year	(1553)	○	11 ½ year	(2553)

SURCHARGE
The surcharge required by 37 CFR 1.20(i)(2) (Fee Code 1558) must be paid as a condition of accepting unintentionally delayed payment of the maintenance fee.

MAINTENANCE FEE (37 CFR 1.20(e)-(g))
The appropriate maintenance fee must be submitted with this petition.

STATEMENT
THE UNDERSIGNED CERTIFIES THAT THE DELAY IN PAYMENT OF THE MAINTENANCE FEE TO THIS PATENT WAS UNINTENTIONAL

PETITIONER(S) REQUEST THAT THE DELAYED PAYMENT OF THE MAINTENANCE FEE BE ACCEPTED AND THE PATENT REINSTATED

THIS PORTION MUST BE COMPLETED BY THE SIGNATORY OR SIGNATORIES

37 CFR 1.378(d) states: "Any petition under this section must be signed by an attorney or agent registered to practice before the Patent and Trademark Office, or by the patentee, the assignee, or other party in interest."

I certify, in accordance with 37 CFR 1.4(d)(4) that I am

◉ An attorney or agent registered to practice before the Patent and Trademark Office

○ A sole patentee

○ A joint patentee; I certify that I am authorized to sign this submission on behalf of all the other patentees.

○ A joint patentee; all of whom are signing this e-petition

○ The assignee of record of the entire interest

Under the Paperwork Reduction Act of 1995, no persons are required to respond to a collection of information unless it displays valid OMB control number.

Patent Practitioner			
A signature of the applicant or representative is required in accordance with 37 CFR 1.33 and 10.18. Please see 37 CFR 1.4(d) for the form of the signature			
Signature	/Kevin Correll/	Date (YYYY-MM-DD)	2012-03-07
Name	Kevin Correll	Registration Number	46641

This collection of information is required by 37 CFR 1.378(c). The information is required to obtain or retain a benefit by the public which is to file (and by the USPTO to process) an application. Confidentiality is governed by 35 U.S.C. 122 and 37 CFR 1.11 and 1.14. This collection is estimated to take 1 hour to complete, including gathering, preparing, and submitting the completed application form to the USPTO. Time will vary depending upon the individual case. Any comments on the amount of time you require to complete this form and/ or suggestions for reducing this burden, should be sent to the Chief Information Officer, U.S. Patent and Trademark Office, U.S. Department of Commerce, P.O. Box 1450, Alexandria, VA 22313-1450. DO NOT SEND FEES OR COMPLETED FORMS TO THIS ADDRESS. **This form can only be used when in conjunction with EFS-Web. If this form is mailed to the USPTO, it may cause delays in reinstating the patent.**

Privacy Act Statement

The Privacy Act of 1974 (P.L. 93-579) requires that you be given certain information in connection with your submission of the attached form related to a patent application or patent. Accordingly, pursuant to the requirements of the Act, please be advised that: (1) the general authority for the collection of this information is 35 U.S.C. 2(b)(2); (2) furnishing of the information solicited is voluntary; and (3) the principal purpose for which the information is used by the U.S. Patent and Trademark Office is to process and/or examine your submission related to a patent application or patent. If you do not furnish the requested information, the U.S. Patent and Trademark Office may not be able to process and/or examine your submission, which may result in termination of proceedings or abandonment of the application or expiration of the patent.

The information provided by you in this form will be subject to the following routine uses:

1. The information on this form will be treated confidentially to the extent allowed under the Freedom of Information Act (5 U.S.C. 552) and the Privacy Act (5 U.S.C. 552a). Records from this system of records may be disclosed to the Department of Justice to determine whether the Freedom of Information Act requires disclosure of these records.

2. A record from this system of records may be disclosed, as a routine use, in the course of presenting evidence to a court, magistrate, or administrative tribunal, including disclosures to opposing counsel in the course of settlement negotiations.

3. A record in this system of records may be disclosed, as a routine use, to a Member of Congress submitting a request involving an individual, to whom the record pertains, when the individual has requested assistance from the Member with respect to the subject matter of the record.

4. A record in this system of records may be disclosed, as a routine use, to a contractor of the Agency having need for the information in order to perform a contract. Recipients of information shall be required to comply with the requirements of the Privacy Act of 1974, as amended, pursuant to 5 U.S.C. 552a(m).

5. A record related to an International Application filed under the Patent Cooperation Treaty in this system of records may be disclosed, as a routine use, to the International Bureau of the World Intellectual Property Organization, pursuant to the Patent Cooperation Treaty.

6. A record in this system of records may be disclosed, as a routine use, to another federal agency for purposes of National Security review (35 U.S.C. 181) and for review pursuant to the Atomic Energy Act (42 U.S.C. 218(c)).

7. A record from this system of records may be disclosed, as a routine use, to the Administrator, General Services, or his/her designee, during an inspection of records conducted by GSA as part of that agency's responsibility to recommend improvements in records management practices and programs, under authority of 44 U.S.C. 2904 and 2906. Such disclosure shall be made in accordance with the GSA regulations governing inspection of records for this purpose, and any other relevant (i.e., GSA or Commerce) directive. Such disclosure shall not be used to make determinations about individuals.

8. A record from this system of records may be disclosed, as a routine use, to the public after either publication of the application pursuant to 35 U.S.C. 122(b) or issuance of a patent pursuant to 35 U.S.C. 151. Further, a record may be disclosed, subject to the limitations of 37 CFR 1.14, as a routine use, to the public if the record was filed in an application which became abandoned or in which the proceedings were terminated and which application is referenced by either a published application, an application open to public inspections or an issued patent.

9. A record from this system of records may be disclosed, as a routine use, to a Federal, State, or local law enforcement agency, if the USPTO becomes aware of a violation or potential violation of law or regulation.

UNITED STATES PATENT AND TRADEMARK OFFICE

Commissioner for Patents
United States Patent and Trademark Office
P.O. Box 1450
Alexandria, VA 22313-1450
www.uspto.gov

FISH & RICHARDSON PC
P.O. BOX 1022
MINNEAPOLIS MN 55440-1022

MAILED
DEC 09 2011
OFFICE OF PETITIONS

In re Application of	:	
William Whitted	:	
Patent Number: 8,011,742	:	DECISION ON
Issue Date: 09/06/2011	:	APPLICATION FOR
Application No. 10/675233	:	PATENT TERM ADJUSTMENT
Filing or 371(c) Date: 09/29/2003	:	
Attorney Docket Number:	:	
16113-1313001 / GP-144-05	:	

This is a decision on the petition filed on November 7, 2011, requesting that the patent term adjustment indicated on the above-identified patent be corrected to indicate that the term of the above-identified patent is extended or adjusted by one thousand two hundred fifty-three (1253) days. The petition is properly treated under 37 CFR 1.705(d).

The petition to correct the patent term adjustment indicated on the above-identified patent to indicate that the term of the above-identified patent is extended or adjusted by one thousand two hundred fifty-three (1253) days is **DISMISSED**.

Patentee avers that the Office erred in calculating a reduction of 67 days in connection with the filing of a reply to a non-final Office action, mailed December 12, 2005, three months and 67 days after the reply was due, on Thursday, May 18, 2006. Patentee asserts that because the due date for the reply, March 12, 2006, fell over a weekend, the three (3) month date for the reply should be calculated from Monday, March 13, 2006, and the period of reduction should be 66 days, and not 67 days, as intended by 35 U.S.C. 154(b)(2)(C)(ii). Applicant references 37 CFR 1.704(b).

Patentee also asserts that that the Office erred in calculating a reduction of 100 days in connection with the filing of a reply to a final Office action, mailed August 4, 2006, three months and 100 days after the reply was due, on Monday, February 12, 2007. Patentee asserts that because the due date for the reply, November 4, 2006, fell over a weekend, the three (3) month date for the reply should be calculated from Monday, November 6, 2006, and the period of reduction should be 98 days, and not 100 days, as intended by 35 U.S.C. 154(b)(2)(C)(ii). Applicant references 37 CFR 1.704(b).

Patentee also asserts that the Office erred in calculating a reduction of 90 days in connection with the filing of a reply to a final Office action, mailed November 23, 2007, three months and 90 days after the reply was due, on Friday, May 23, 2008. Patentee asserts that because the due date for the reply, February 23, 2008, fell over a weekend, the three (3) month date for the reply should be calculated from Monday, February 25, 2008, and the period of reduction should be 88 days, and not 90 days, as intended by 35 U.S.C. 154(b)(2)(C)(ii). Applicant references 37 CFR 1.704(b).

Finally, Patentee asserts that the Office erred in subtracting from the "B" Delay period time that was not consumed by continued examination. Patentees filed, inter alia, Requests for Continued Examination ("RCE"), on February 12, 2007. This Office mailed a Notice of Allowance and Issue Fee Due on July 13, 2011. Patentees request an additional fifty-six (56) days of patent term adjustment in the period beginning on the date that the Notice of Allowance and Issue Fee Due was mailed, and ending on the date the patent issued, September 6, 2011. Patentees aver that with the mailing of the Notice of Allowance on July 13, 2011, the Office closed examination on the present application on that date, and no continued examination took place in the 56-day period from the mailing date of the Notice of Allowance and Issue Fee Due, to the issuance of the patent. Accordingly, Patentees aver that 56 days of B Delay should have been included in the period of delay accorded by the Director, and that the "B Delay" for issuance of the patent beyond three years from filing is 191 days, instead of 135 days.

Patentee's arguments have been carefully considered. Regarding the reduction of 67 days in connection with the non-final Office action, mailed December 12, 2005, Office records confirm that the reply to the Office action was filed on Thursday, May 18, 2006. 35 U.S.C. 21(b) provides that "[w]hen the day, or the last day, for taking any action or paying any fee in the United States Patent and Trademark Office falls on Saturday, Sunday, or a Federal holiday within the District of Columbia, the action may be taken, or fee paid, on the next succeeding secular or business day. Here, the day or last day for filing a reply to the Office action (i.e. May 12, 2006), was neither a Saturday, Sunday, nor a Federal holiday within the District of Columbia. Further to this, as stated in ArQule, 35 U.S.C. § 21(b) applies to any action an applicant can take, including timeliness of an applicant's response to a PTO request. ArQule at p.10. (Emphasis added). Applicant filed a reply on Thursday, May 18, 2006, and Wednesday, May 17, 2006, was also not a Saturday, Sunday, or a Federal holiday within the District of Columbia. The Office properly calculated the period of reduction beginning on the day after the date that is three months after the date of mailing or transmission of the Office action, March 13, 2006, and ending on the date applicant filed the reply, May 18, 2006, and the period of reduction properly calculated at 67 days.

Regarding the reduction of 100 days in connection with the filing of a reply to a final Office action, mailed August 4, 2006, three months and 100 days after the reply was due, on Monday, February 12, 2007, 35 U.S.C. 21(b) provides that "[w]hen the day, or the last day, for taking any action or paying any fee in the United States Patent and Trademark Office falls on Saturday, Sunday, or a Federal holiday within the District of Columbia, the action may be taken, or fee paid, on the next succeeding secular or business day. Here, last day for filing the reply fell on

Monday, February 4, 2007, which was neither a "Saturday, Sunday, or a Federal holiday within the District of Columbia." As such, 35 U.S.C. 21(b) does not apply, and the period of reduction is properly calculated at 100 days.

Regarding the reduction of 90 days, Office records confirm that a final Office action was mailed November 23, 2007, and that the reply to the Office action was filed on Friday, May 23, 2008. Here, the day, or the last day, for filing the reply (i.e. May 23, 2008), was neither a weekend nor a Federal holiday within the District of Columbia. Further to this, as stated in ArQule, 35 U.S.C. § 21(b) applies to any action an applicant can take, including timeliness of an applicant's response to a PTO request. ArQule at p.10. (Emphasis added). Here, applicant filed a reply on Friday, May 23, 2008. The Office properly calculated the period of reduction beginning on the day after the date that is three months after the date of mailing or transmission of the Office action, November 24, 2007, and ending on the date applicant filed the reply, May 23, 2008, and the period of reduction properly calculated at 90 days.

Regarding the "B delay," counting the period of time excluded from the "B delay" for the filing of a request for continued examination under 35 U.S.C. 132(b), from the date on which the request for continued examination is filed to the date the patent is issued is proper. Patentee does not dispute that time consumed by continued examination of an application under 35 U.S.C. 132(b) is properly excluded and that the calculation of the excluded period begins on the date of filing of the request for continued examination. At issue is what further processing or examination beyond the date of filing of the request for continued examination is not any time consumed by continued examination of the application under 35 U.S.C. 132(b). The USPTO indicated in September of 2000 in the final rule to implement the patent term adjustment provisions of the AIPA that once a request for continued examination under 35 U.S.C. 132(b) and 37 CFR 1.114 is filed in an application, any further processing or examination of the application, including granting of a patent, is by virtue of the continued examination given to the application under 35 U.S.C. 132(b) and CFR 1.114. See Changes to Implement Patent Term Adjustment under Twenty-Year Patent Term, 65 Fed. Reg. 56366, 56376 (Sept. 18, 2000) (response to comment 8). Thus, the excluded period begins with the filing of the request for continued examination and ends with the issuance of the patent.

Patentee's argument that the period of time after the issuance of a notice of allowance on a request for continued examination is not "any time consumed by continued examination requested by the applicant under section 132(b)" within the meaning of 35 U.S.C. 154(b)(1)(B)(i) is not availing. This limitation is not supported by the statutory language. Garcia v. United States, 469 U.S. 70, 75 (1984) ("only the most extraordinary showing of contrary intentions from [legislative history] would justify a limitation on the 'plain meaning' of the statutory language"). BP Am. Prod. Co. v. Burton, 549 U.S. 84, 91 (2006) ("Unless otherwise defined, statutory terms are generally interpreted in accordance with their ordinary meaning"). The statute provides for a guarantee of no more than 3-year application pendency, by providing for an adjustment in the patent term:

First, "Subject to the limitations of paragraph (2)," means that the limitations of paragraph 2 apply to this paragraph's adjustment of patent term. That is, the day-to-day extension of patent term for pendency beyond the 3 year period is restricted as follows: 1) "B delay" cannot accrue for days of "A delay" that overlap, 2) the patent term cannot be extended beyond disclaimed term, and 3) the period of adjustment, including accrued "B delay," will be reduced for applicant delay.

Second, "if the issue of an original patent is delayed due to the failure of the United States Patent and Trademark Office to issue a patent within 3 years after the actual filing date of the application in the United States," meaning that the condition must first occur that the issuance of an original patent (35 U.S.C. 153), not merely the issuance of a notice of allowance, is delayed due to the Office's failure to issue a patent (sign and record a patent grant in the name of the United States), not merely mail a notice of allowance, within 3 years after the actual filing date of the application in the United States. This provision gives the Office a three-year period to issue a patent (sign and record a patent grant in the name of the United States) after the application filing date before an adjustment will accrue for "B delay."

Third, "not including- (i) any time consumed by continued examination of the application requested by the applicant under section 132(b); (ii) any time consumed by a proceeding under section 135(a), any time consumed by the imposition of an order under section 181, or any time consumed by appellate review by the Board of Patent Appeals and Interferences or by a Federal court; or (iii) any delay in the processing of the application by the United States Patent and Trademark Office requested by the applicant except as permitted by paragraph (3)(C), meaning that the three-year period does not include "any time consumed by" or "any delay in processing," as specified in clauses (i)-(iii). This language correlates to 35 U.S.C. 154(b)(1)(A) which likewise provides the basis for determining the period given the Office to take the specified actions before an adjustment will accrue for "A delay" (e.g., extended for 1 day after the day after the period specified in clauses (i)-(iv)).

Furthermore, these clauses are interpreted using their ordinary meanings. Nonetheless, the context of the legislation should be considered. As stated in Wyeth v. Dudas, 580 F. Supp. 2d 138, 88 U.S.P.Q. 2d 1538 (D.D.C. 2008), because the clock for calculating the 20-year patent term begins to run on the filing date, and not on the day the patent is actually granted, some of the effective term of a patent is consumed by the time it takes to prosecute the application. To mitigate this effect, the statute, *inter alia*, grants adjustments of patent term whenever the patent prosecution takes more than three years, regardless of the reason. The time consumed by prosecution of the application includes every day the application is pending before the Office from the actual filing date of the application in the United States until the date of issuance of the patent. The time it takes to prosecute the application ends not with the mailing of the notice of allowance, but with the issuance of the patent.

Thus, not including "any time consumed by" means not including any days used to prosecute the application as specified in clauses (i)-(ii)[1]. Clause (i) specifies "any time consumed by continued examination of the application requested by the applicant under section 132(b)." Clause (ii) specifies "any time consumed by a proceeding under section 135(a), any time consumed by the imposition of an order under section 181, or any time consumed by appellate review by the Board of Patent Appeals and Interferences or by a Federal court." "Time" in the context of this legislation throughout refers to days. "Consumed by" means used by or used in the course of. *Websters Collegiate Dictionary*, (11th ed.). The "any" signifies that the days consumed by are "any" of the days in the pendency of the application, and not just days that occur after the application has been pending for 3 years. As such, "any time consumed by" refers to any days used in the course of 1) continued examination of the application under section 132(b)(the filing of a request for continued examination), 2) interference proceedings, 3) secrecy orders, and 4) appellate review. Thus, that 3-year period given to the Office to issue a patent before an adjustment will accrue for "B delay" does not include any days used in the course of or any time consumed by clauses (i)-(ii), including any time consumed by the filing of a request for continued examination.

Fourth, "the term of the patent shall be extended 1 day for each day after the end of that 3-year period until the patent is issued" meaning that the consequence of this failure is that after "the end of that 3-year period" an additional 1 day of patent term will accrue for each day that the application is pending until the day the patent is issued.

The "time consumed by" or used in the course of the continued examination of the application requested by the applicant under section 132(b) does not end until issuance of the patent. 35 U.S.C. 132(b) was enacted under the same title, the "American Inventors Protection Act of 1999," as 35 U.S.C. 154(b). Section 4403 of the AIPA amended 35 U.S.C. § 132 to provide, at the request of the applicant, for continued examination of an application for a fee (request for continued examination or RCE practice), without requiring the applicant to file a continuing application under 37 CFR 1.53(b) or a continued prosecution application (CPA) under 37 CFR 1.53(d). Thus, clause (i) is different from clause (ii) in that clause (i) refers to an examination process whereas clause (ii) refers to time consumed by proceedings (interferences, secrecy orders and appeals) in an application.

By nature, the time used in the course of the examination process continues to issuance of the patent. The examination process involves examining the application to ascertain whether it appears that the applicant is entitled to a patent under the law. See 35 U.S.C. 131 ("[t]he Director shall cause an examination to be made of the application and the alleged new invention; and if on such examination it appears that the applicant is entitled to a patent under the law, the

---

[1] Clause (iii) provides for not including (iii) any delay in the processing of the application by the United States Patent and Trademark Office requested by the applicant except as permitted by paragraph (3)(C), the term of the patent shall be extended 1 day for each day after the end of that 3-year period until the patent is issued. It is noted that paragraph (3)(C) allows with an adequate showing by applicant for reinstatement of no more than 3 months of the patent term reduced for applicant delay in taking in excess of three months to respond.

Director shall issue a patent therefor"). If on examination it appears that the applicant is entitled to a patent, the USPTO issues a notice of allowance. See 35 U.S.C. 151 ("[i]f it appears that applicant is entitled to a patent under the law, a written notice of allowance of the application shall be given or mailed to the applicant"). If on examination it appears that the applicant is not entitled to a patent, the USPTO issues a notice (an Office action) stating the applicable rejection, objection, or other requirement, with the reasons therefor. See 35 U.S.C. 132 ("[w]henever, on examination, any claim for a patent is rejected, or any objection or requirement made, the Director shall notify the applicant thereof, stating the reasons for such rejection, or objection or requirement, together with such information and references as may be useful in judging of the propriety of continuing the prosecution of his application"). Neither the issuance of a notice of allowance nor the insurance of an Office action terminates the examination process. If after the issuance of an Office action under 35 U.S.C. 132 it subsequently appears that the applicant is entitled to a patent (e.g., in response to an argument or amendment by the applicant), the USPTO will issue a notice of allowance. Conversely, if after the issuance of a notice of allowance under 35 U.S.C. 151 it subsequently appears that the applicant is not entitled to a patent (e.g., in response to information provided by the applicant or uncovered by the USPTO), the USPTO will withdraw the application from issuance and issue an Office action under 35 U.S.C. 132 stating the applicable rejection, objection, or other requirement, with the reasons therefor.

As held in Blacklight Power, the USPTO's responsibility to issue a patent containing only patentable claims does not end with the issuance of a notice of allowance under 35 U.S.C. 151. See BlackLight Power, Inc. v. Rogan, 295 F.3d 1269, 1273 (Fed. Cir. 2002). Rather, if there is any substantial, reasonable ground within the knowledge or cognizance of the Director as to why an application should not issue, it is the USPTO's duty to refuse to issue the patent even if a notice of allowance has previously been issued for the application. See In re Drawbaugh, 9 App. D.C. 219, 240 (D.C. Cir 1896).

Moreover, the applicant continues to be engaged in the examination process after the mailing of the notice of allowance. 37 CFR 1.56 makes clear that the applicant has a duty to disclose information material to patentability as long as the application is pending before the USPTO (i.e., until a patent is granted or the application is abandoned). See 37 CFR 1.56(a) ("[t]he duty to disclose information exists with respect to each pending claim until the claim is cancelled or withdrawn from consideration, or the application becomes abandoned"). 37 CFR 1.97 and 1.98 provide for the consideration of information submitted by the applicant after a notice of allowance has been mailed. See 37 CFR 1.97(d). In addition, 37 CFR 1.312 provides for the amendment of an application after a notice of allowance has been mailed. In fact, the request for examination procedures[2] permit the filing of a request for continued examination under 37 CFR 1.114 even after the issuance of a notice of allowance under 35 U.S.C. 151. See 37 CFR 1.114(a)(1).

As the examination process does not terminate with the mailing of the notice of allowance, the time consumed by continued examination requested by the applicant under section 132(b) does

[2] Thus, on occasion, even where a request for continued examination has already been filed and a notice of allowance issued pursuant to that request, applicant may file a further request for continued examination.

not terminate with the mailing of the notice of allowance. All the time the application is pending from the date of filing of the request for continued examination to the mailing of the notice of allowance through issuance of the patent is a consequence of the filing of the request for continued examination. Further action by the Office is pursuant to that request. Applicant has gotten further prosecution of the application without having to file a continuing application under 37 CFR 1.53(b).

All of the continued examination pursuant to the filing of the request by the applicant is properly excluded from the delay attributed to the Office. 35 U.S.C. 154(b)(1)(B)'s guarantee of a total application pendency of no more than three years provides for adjustment of the patent term for delay due to the Office's failure to issue the patent within three years, but does not include "any time consumed by continued examination requested by the applicant under 35 U.S.C. 132(b)." It is not necessary to mitigate the effect on the 20-year term to the extent that applicant has requested that the Office continue to examine the application via a request for continued examination, in lieu of, the filing of a continuing application under 37 CFR 1.53(b).

As the period from the filing date of the request for continued examination (RCE) to the issue date of the patent is not included in the "B" delay period, the over three year period begins on September 30, 2006, and ends on February 11. 2007, the day before the RCE, filed February 12, 2007, was filed, and is 135 days. See, 35 U.S.C. 154(b)(1)(B)(i).

Nothing in this decision shall be construed as a waiver of the requirement of 35 U.S.C. 154(b)(4) that any civil action by an applicant dissatisfied with a determination made by the Director under 35 U.S.C. 154(b)(3) be filed in the United States District Court for the District of Columbia within 180 days after the grant of the patent.

The Office acknowledges submission of the $200.00 fee set forth in 37 CFR 1.18(e). No additional fees are required.

Telephone inquiries specific to this matter should be directed to the undersigned at (571) 272-3232.

/DLW/

Derek L. Woods
Attorney
Office of Petitions

UNITED STATES PATENT AND TRADEMARK OFFICE

Commissioner for Patents
United States Patent and Trademark Office
P.O. Box 1450
Alexandria, VA 22313-1450
www.uspto.gov

MCANDREWS HELD & MALLOY, LTD
500 WEST MADISON STREET
SUITE 3400
CHICAGO, IL 60661

MAILED
SEP 30 2011
OFFICE OF PETITIONS

In re Patent of Jeyhan Karaoguz et al.	:	DECISION ON REQUEST
Patent No. 7,958,525	:	FOR RECONSIDERATION OF
Issue Date: June 7, 2011	:	PATENT TERM ADJUSTMENT
Application No. 10/675,466	:	AND NOTICE OF INTENT TO
Filing Date: September 30, 2003	:	ISSUE CERTIFICATE OF
Attorney Docket No. 15038US02	:	CORRECTION

This is a decision on the petition filed August 8, 2011, which is being treated as a petition under 37 C.F.R. § 1.705(d) requesting the patent term adjustment indicated on the patent be corrected to indicate the term of the patent is extended or adjusted by one thousand three hundred twenty-one (1,321) days.

The first page of the petition asserts Patentees submitted "an earlier request for recalculation under 37 CFR § 1.705(b)." However, Office records fail to indicate the Office received such a request. The instant decision is based solely on the petition filed August 8, 2011.

The petition to correct the patent term adjustment indicated on the patent to indicate the term of the patent is extended or adjusted by one thousand three hundred twenty-one (1,321) days is **GRANTED to the extent indicated herein.**

The Office will *sua sponte* issue a certificate of correction. Pursuant to 37 C.F.R. § 1.322, the Office will not issue a certificate of correction without first providing assignee or patentee an opportunity to be heard. Accordingly, patentees are given **one (1) month or thirty (30) days,** whichever is longer, from the mail date of this decision to respond. No extensions of time will be granted under 37 C.F.R. § 1.136.

No portion of this decision should be construed as a waiver of the requirement, set forth in 35 U.S.C. § 154(b)(4), that any civil action by an applicant dissatisfied with a determination made by the Director under 35 U.S.C. § 154(b)(3) be filed in the United States District Court for the District of Columbia within 180 days after the grant of the patent.

The application matured into Patent No. 7,958,525 on June 7, 2011. The patent sets forth a patent term adjustment determination of 1,286 days. The instant petition and the required fee under 37 C.F.R. § 1.18(e) were timely filed August 8, 2011.

The petition argues the correct period of delay under 35 U.S.C. § 154(b)(1)(B) ("B Delay") is 636 days, not 635 days as calculated by the Office.

The petition argues the Office's entry of a 1-day reduction in patent term adjustment under 37 C.F.R. § 1.704(b) based on the submission of the issue fee on May 2, 2011, was improper.

The petition argues the correct period of delay under 37 C.F.R. § 1.704(c)(10) is 18 days, not 51 days.

The petition argues the correct patent term adjustment is 1,321 days, not 1,286 days.

Issue 1

The petition argues the correct period of B Delay is 636 days, not 635 days, based on an assertion the Office improperly excluded the date a request for continued examination ("RCE") was filed from the period of B Delay

Pursuant to 35 U.S.C. § 154(b)(1)(B), the period of B Delay does not include "any time consumed by continued examination of the application requested by the applicant."

37 C.F.R. § 1.703(b) states the period of B Delay does not include:

> The number of days, if any, in the period beginning on the date on which a request for continued examination of the application under 35 U.S.C. 132(b) was filed and ending on the date the patent was issued.

The petition fails to demonstrate 37 C.F.R. § 1.703(b) is inconsistent with the statute.

Pursuant to 37 C.F.R. § 1.703(b), the number of days excluded from the period of B Delay when a RCE is filed includes the date the RCE is filed. Therefore, the Office correctly excluded the date the RCE was filed from the period of B Delay.

The petition expresses a belief the Office does not count the date a Notice of Appeal is filed when determining the number of days to be excluded from B Delay as time consumed by appellate review. The petition asserts the manner in which the Office calculates the number of days consumed by appellate review supports a conclusion the number of days consumed by continued examination should not include the date a RCE is filed.

The Office currently counts the date a Notice of Appeal is filed as part of the number of days consumed by appellate review. Therefore, the manner in which the Office calculates the number of days consumed by appellate review is not inconsistent with the manner in which the Office calculates the time consumed by continued examination.

Issue 2

The issue fee was paid on May 2, 2011, which was three months and one day after the Office mailed the Notice of Allowance. As a result of the submission of the issue fee on May 2, 2011, the Office entered a 1-day reduction in patent term adjustment under 37 C.F.R. § 1.704(b). The petition argues the submission of the issue fee on May 2, 2011, should not have resulted in a reduction in patent term adjustment.

The date three months from the issue date of the Notice of Allowance was May 1, 2011, which was a Sunday. The issue fee was paid on Monday, April 25, 2011. As a result of 35 U.S.C. § 21(b), when the three-month deadline to reply to an Office action falls on a weekend or holiday, and a response is filed on the next business day, a reduction in patent term adjustment under 37 C.F.R. § 1.704(b) is inappropriate. Therefore, the Office's entry of a one-day reduction in patent term adjustment as a result of the submission of the issue fee on May 2, 2011, was improper.

Issue 3

The petition argues the correct total period of delay under 37 C.F.R. § 1.704(c)(10) is 18 days, not 51 days.

Relevant Facts for Issue 3

The Office mailed a Notice of Allowance on February 1, 2011.

An "Amendment Under 37 C.F.R. §1.312" ("Amendment 1") was filed April 18, 2011. The amendment made changes to claims 1 and 36.

An "Amendment After Allowance Under 37 C.F.R. § 1.312" ("Amendment 2") was filed April 29, 2011. The amendment changed drawing figures 3-11 to correct informalities. The amendment was accompanied by a copy of ten replacement sheets of drawings. The copy of the Electronic Filing Acknowledgment Receipt corresponding to Amendment 2 indicates the amendment was filed at 5:25 p.m.

The Office's PALM system includes the following entry dated April 29, 2011: "Workflow – Drawings Finished." The petition assumes the entry is an indication the Office finished all processing of the drawings on April 29, 2011, the same date the drawings were filed.

The Office's PALM system includes the following entry dated May 4, 2011: "Application is Considered Ready for Issue." The petition asserts the entry indicates "no further delay occurred after that date."

The Office mailed a "Response to Rule 312 Communication" responding to Amendment 1, but not Amendment 2, on May 6, 2011.

When calculating patent term adjustment, the Office entered a total reduction of 51 days in patent term adjustment under 37 C.F.R. § 1.704(c)(10).

Discussion of Issue 3

37 C.F.R. § 1.704(c)(10) states,

> [Upon] [s]ubmission of an amendment under § 1.312 or other paper after a notice of allowance has been given or mailed ... the period of adjustment set forth in § 1.703 shall be reduced by the lesser of:
>
> (i) The number of days, if any, beginning on the date the amendment under § 1.312 or other paper was filed and ending on the mailing date of the Office action or notice in response to the amendment under § 1.312 or such other paper; or
> (ii) Four months.

The number of days beginning April 18, 2011, the date Amendment 1 was filed, and ending May 6, 2011, the date the Office responded to Amendment 1, is 19 days. Therefore, the period of delay under 37 C.F.R. § 1.704(c)(10) based on the submission of Amendment 1 is 19 days.

The number of days beginning April 29, 2011, the date Amendment 2 was filed, and ending June 7, 2011, the date the patent issued, is 40 days. Therefore, the period of delay under 37 C.F.R. § 1.704(c)(10) based on the submission of Amendment 2 is 40 days.

The 19-day period of delay based on the submission of Amendment 1 and the 40-day period of delay based on the submission of Amendment 2, overlap by 8 days. Therefore, a total reduction in patent term adjustment of 51 (19 + 40 – 8) days is warranted under 37 C.F.R. § 1.704(c)(10).

The petition argues the correct period of delay under 37 C.F.R. § 1.704(c)(10) based on the submission of Amendment 1 is 18 days, not 19 days. Specifically, the petition asserts the method used to calculate the period of reduction set forth in 37 C.F.R. § 1.704(c)(10) is inconsistent with 35 U.S.C. § 154. Although the arguments in the petition have been considered, the arguments are insufficient to establish the method used to calculate the period of reduction set forth in 37 C.F.R. § 1.704(c)(10) is inconsistent with the provisions of 35 U.S.C. § 154.

The petition argues the submission of Amendment 2 should not have resulted in an additional reduction in patent term adjustment. Since the time period beginning April 29, 2011, the date Amendment 2 was filed, and ending May 6, 2011, the date the Office mailed a response to Amendment 2, overlaps with the previously discussed 19-day period of delay based on Amendment 1, the Office only needs to determine if the submission of Amendment 2 warrants entry of a reduction in patent term adjustment for any period of delay after May 6, 2011.

The petition argues a reduction in patent term adjustment based on the submission of Amendment 2 is unwarranted because the submission of the drawings did not result in any actual delay in the issuance of the patent. The petition also argues, even if Amendment 2 did result in

any actual delay, such actual delay did not include any of the time period after May 6, 2011. The provisions of 37 C.F.R. § 1.704(c)(10) do not limit any reduction in patent term adjustment to the actual delay resulting from the submission of a paper after allowance and the petition has not demonstrated the provisions of 37 C.F.R. § 1.704(c)(10) are inconsistent with the provisions of 35 U.S.C. § 1.154. Therefore, the Office is not persuaded the Office must base any reduction in patent term adjustment under 37 C.F.R. § 1.704(c)(10) on the actual delay resulting from the submission of a paper.

The petition argues a reduction in patent term adjustment based on the submission of Amendment 2 is unwarranted because the Office never mailed a response to Amendment 2. The petition states, "The USPTO never mailed a response to [Amendment 2] as the rule clearly contemplates must occur for it to determine the length of the alleged delay for that filing."

37 C.F.R. § 1.704(c)(10) states the period of reduction under the regulation is the lesser of four months or, with emphasis added,

> The number of days, *if any*, beginning on the date the amendment under § 1.312 or other paper was filed and ending on the mailing date of the Office action or notice in response to the amendment under § 1.312 or such other paper[.]

The language "if any" in the regulation can include a situation where an Office action or notice is never issued in response to a paper filed after allowance.

In this case, the period of delay under 37 C.F.R. § 1.704(c)(10) is four months unless the record demonstrates an "Office action or notice in response" to Amendment 2 was issued within four months of the date Amendment 2 was filed. The Office has determined the issuance of a patent constitutes "an Office action or response" to a paper, absent the issuance of an Office action or response, when applying 37 C.F.R. § 1.704(c)(10). The number of days beginning April 29, 2011, the date Amendment 2 was filed, and ending June 7, 2011, the date the patent issued, is 40 days. The period of time of 40 days is less than four months. Therefore, the period of delay under 37 C.F.R. § 1. 704(c)(10) based on the submission of Amendment 2 is 40 days.

In view of the prior discussion, the record fails to prove the Office's entry of a total reduction of 51 days in patent term adjustment under 37 C.F.R. § 1.704(c)(10) was improper.

Conclusion

The petition has not established the Office miscalculated the period of B Delay or the total period of delay under 37 C.F.R. § 1.704(c)(10). However, the petition has established the Office improperly entered a 1-day reduction in patent term adjustment under 37 C.F.R. § 1.704(b) based on the submission of the issue fee on May 2, 2011. Therefore, the correct patent term adjustment is 1,287 days, rather than 1,286 days as previously calculated by the Office.

The instant case is being forwarded to the Certificates of Correction Branch for issuance of a certificate of correction. The Office will issue a certificate of correction indicating that the term of the patent is extended or adjusted by **one thousand two hundred eight seven (1,287)** days.

Telephone inquiries specific to this decision should be directed to Senior Petitions Attorney Steven Brantley at (571) 272-3203.

Charles Steven Brantley
Senior Petitions Attorney
Office of Petitions

Enclosure: Copy of DRAFT Certificate of Correction

UNITED STATES PATENT AND TRADEMARK OFFICE

CERTIFICATE OF CORRECTION

PATENT NO.	:	7,958,525 B2
APPLICATION NO.	:	10/675,466
DATED	:	June 7, 2011
INVENTOR(S)	:	Jeyhan Karaoguz et al.

DRAFT

It is certified that error appears in the above-identified patent and that said Letters Patent is hereby corrected as shown below:

On the Title page,

[*] Notice: Subject to any disclaimer, the term of this patent is extended or adjusted under 35 U.S.C. 154(b) by 1286 days.

Delete the phrase "by 1286 days" and insert -- by 1287 days--

UNITED STATES PATENT AND TRADEMARK OFFICE

COMMISSIONER FOR PATENTS
UNITED STATES PATENT AND TRADEMARK OFFICE
P.O. BOX 1450
ALEXANDRIA, VA 22313-1450
www.uspto.gov

MCANDREWS HELD & MALLOY, LTD
500 WEST MADISON STREET
SUITE 3400
CHICAGO IL 60661

MAILED
NOV 04 2010
OFFICE OF PETITIONS

In re Patent of Karaoguz et al.	:	DECISION ON REQUEST
Patent No. 7,584,359	:	FOR RECONSIDERATION OF
Issue Date: September 1, 2009	:	PATENT TERM ADJUSTMENT
Application No. 10/675,652	:	and
Filed: September 30, 2003	:	NOTICE OF INTENT TO ISSUE
Atty. Docket No. 15046US01	:	CERTIFICATE OF CORRECTION

This is a decision on the petition filed on June 18, 2010, requesting that the patent term adjustment indicated on the above-identified patent be corrected to indicate that the term of the above-identified patent is extended or adjusted by one thousand two hundred fifty (1250) days. The petition was timely filed within one month of the mailing of a Notice Concerting Improper Calculation of Patent Term Adjustment Based Upon USPTO Improperly Measuring Reduction Period under 37 CFR 1.704(c)(10), mailed May 18, 2010. The Office acknowledges receipt of the required $200.00 fee under 37 CFR 1.18(e).

The petition to correct the patent term adjustment indicated on the above-identified patent to indicate that the term of the above-identified patent is extended or adjusted one thousand two hundred fifty (1250) days is **GRANTED TO THE EXTENT INDICATED HEREIN.**

Patentees argue that the Office miscalculated the period of delay under 35 U.S.C. § 154(b)(1)(B) ("B Delay"). Patentees indicate the period of B delay is 590 days, not 589 days, as the Office calculated.

Unless a Request for Continued Examination ("RCE") is filed, the period of B Delay ends of the date the patent issues. In this case, a RCE was filed May 12, 2008. Per 35 U.S.C. § 154(b)(1)(B)(i), B Delay does not include "any time consumed by continued examination of the application requested by the applicant under section 132(b)." The period of B Delay in this case is 589 days, which is the number of days beginning on

October 1, 2006, the day after the date three years after the application's filing date, and ending on May 11, 2008, the day before the date the RCE was filed.

Next, patentees argue that the Office miscalculated the period of reduction associated with the filing of a 312 amendment on July 6, 2009. Patentees argue the period of reduction is 9 days, not 10 days as the Office calculated.

37 CFR § 1.704(c)(10) provides that:

> Submission of an amendment under § 1.312 or other paper after a notice of allowance has been given or mailed, in which case the period of adjustment set forth in § 1.703 shall be reduced by the lesser of:
>
> (i) The number of days, if any, beginning on the date the amendment under § 1.312 or other paper was filed and ending on the mailing date of the Office action or notice in response to the amendment under § 1.312 or such other paper;
>
> or
>
> (ii) Four months;

The period of reduction is properly calculated as ten (10) days, counting the number of days in the period beginning on the date the 312 amendment was filed, July 6, 2009, and ending on July 15, 2009, the date the Office mailed a Response to Rule 312 Communication.

The correct patent term adjustment is 1248 days, which is the sum of 855 days of delay under 35 U.S.C. § 154(b)(1)(A) ("A Delay") and 589 of B Delay minus 186 days overlap (from October 1, 2006 to April 4, 2007) reduced by 10 days for Applicant delay.

The Office will *sua sponte* issue a certificate of correction. Pursuant to 37 CFR 1.322, the Office will not issue a certificate of correction without first providing assignee or patentee an opportunity to be heard. Accordingly, patentees are given **one (1) month or thirty (30) days**, whichever is longer, from the mail date of this decision to respond. No extensions of time will be granted under § 1.136.

The application is being forwarded to the Certificates of Branch for issuance of a certificate of correction. The Office will issue a certificate of correction indicating that the term of the above-identified patent is extended or adjusted by **one thousand two hundred forty-eight (1248)** days.

Telephone inquiries specific to this decision should be directed to the undersigned at (571) 272-3230.

Shirene Willis Brantley

Shirene Willis Brantley
Senior Petitions Attorney
Office of Petitions

Enclosure: Copy of DRAFT Certificate of Correction

UNITED STATES PATENT AND TRADEMARK OFFICE

CERTIFICATE OF CORRECTION

PATENT : 7,574,359 B2

DATED : **September 1, 2009** **DRAFT**

INVENTOR(S) : Karaoguz et al.

It is certified that error appears in the above-identified patent and that said Letters Patent is hereby corrected as shown below:

On the cover page,

[*] Notice: Subject to any disclaimer, the term of this patent is extended or adjusted under 35 U.S.C. 154(b) by 845 days

Delete the phrase "by 845 days" and insert – by 1248 days--

UNITED STATES PATENT AND TRADEMARK OFFICE

UNITED STATES DEPARTMENT OF COMMERCE
United States Patent and Trademark Office
Address: COMMISSIONER FOR PATENTS
P.O. Box 1450
Alexandria, Virginia 22313-1450
www.uspto.gov

TUCKER ELLIS & WEST LLP
1150 HUNTINGTON BUILDING
925 EUCLID AVENUE
CLEVELAND, OH 44115-1414

Mail Date: 08/04/2010

Applicant	: Min Kuo	: DECISION ON REQUEST FOR
Patent Number	: 7656547	: RECALCULATION of PATENT
Issue Date	: 02/02/2010	: TERM ADJUSTMENT IN VIEW
Application No	: 10/675,689	: OF WYETH AND NOTICE OF INTENT TO
Filed	: 09/30/2003	: ISSUE CERTIFICATE OF CORRECTION
		:

The Request for Recalculation is **GRANTED** to the extent indicated.

The patent term adjustment has been determined to be **1169** days. The USPTO will *sua sponte* issue a certificate of correction reflecting the amount of PTA days determined by the recalculation.

Prior to the issuance of the certificate of correction, the USPTO will afford patentee an opportunity to be heard and request reconsideration. Accordingly, patentee has **one month or thirty (30) days**, whichever is longer, to file a request for reconsideration of this patent term adjustment calculation. See 35 U.S.C. 154(b)(3)(B)(ii) and 37 CFR 1.322(a)(4). No extensions of time will be granted under 37 CFR 1.136.

Patentee should use document code PET.OP if electronically filing a request for reconsideration of this patent term adjustment calculation. The patentee must also include the information required by 37 CFR 1.705(b)(2) and the fee required by 37 CFR 1.18(e). If patentee does not file a timely request for reconsideration of this patent term adjustment calculation including the information required by 37 CFR 1.705(b)(2) and the fee required by 37 CFR 1.18(e), the USPTO will issue a certificate of correction reflecting the PTA determination noted above.

Patentee should be aware that in order to preserve the right to review in the United States District Court for the District of Columbia of the USPTO patent term adjustment determination, patentee must ensure that he or she also take the steps required under 35 U.S.C. 154(b)(4)(A) in a timely manner. Nothing in the request for recalculation should be construed as providing an alternative time frame for commencing a civil action under 35 U.S.C. 154(b)(4)(A).

Any questions concerning this decision should be directed to the Office of Patent Legal Administration at 571-272-7702.

UNITED STATES PATENT AND TRADEMARK OFFICE

UNITED STATES DEPARTMENT OF COMMERCE
United States Patent and Trademark Office
Address: COMMISSIONER FOR PATENTS
P.O. Box 1450
Alexandria, Virginia 22313-1450
www.uspto.gov

TUCKER ELLIS & WEST LLP
1150 HUNTINGTON BUILDING
925 EUCLID AVENUE
CLEVELAND, OH 44115-1414

Mail Date: 08/09/2010

Applicant	: Sanjay Wangoo	: DECISION ON REQUEST FOR
Patent Number	: 7657608	: RECALCULATION of PATENT
Issue Date	: 02/02/2010	: TERM ADJUSTMENT IN VIEW
Application No	: 10/675,737	: OF WYETH AND NOTICE OF INTENT TO
Filed	: 03/04/2004	: ISSUE CERTIFICATE OF CORRECTION
		:

The Request for Recalculation is **GRANTED** to the extent indicated.

The patent term adjustment has been determined to be **1083** days. The USPTO will *sua sponte* issue a certificate of correction reflecting the amount of PTA days determined by the recalculation.

Prior to the issuance of the certificate of correction, the USPTO will afford patentee an opportunity to be heard and request reconsideration. Accordingly, patentee has **one month or thirty (30) days**, whichever is longer, to file a request for reconsideration of this patent term adjustment calculation. See 35 U.S.C. 154(b)(3)(B)(ii) and 37 CFR 1.322(a)(4). No extensions of time will be granted under 37 CFR 1.136.

Patentee should use document code PET.OP if electronically filing a request for reconsideration of this patent term adjustment calculation. The patentee must also include the information required by 37 CFR 1.705(b)(2) and the fee required by 37 CFR 1.18(e). If patentee does not file a timely request for reconsideration of this patent term adjustment calculation including the information required by 37 CFR 1.705(b)(2) and the fee required by 37 CFR 1.18(e), the USPTO will issue a certificate of correction reflecting the PTA determination noted above.

Patentee should be aware that in order to preserve the right to review in the United States District Court for the District of Columbia of the USPTO patent term adjustment determination, patentee must ensure that he or she also take the steps required under 35 U.S.C. 154(b)(4)(A) in a timely manner. Nothing in the request for recalculation should be construed as providing an alternative time frame for commencing a civil action under 35 U.S.C. 154(b)(4)(A).

Any questions concerning this decision should be directed to the Office of Patent Legal Administration at 571-272-7702.

UNITED STATES PATENT AND TRADEMARK OFFICE

UNITED STATES DEPARTMENT OF COMMERCE
United States Patent and Trademark Office
Address: COMMISSIONER FOR PATENTS
P.O. Box 1450
Alexandria, Virginia 22313-1450
www.uspto.gov

TUCKER ELLIS & WEST LLP
1150 HUNTINGTON BUILDING
925 EUCLID AVENUE
CLEVELAND, OH 44115-1414

Mail Date: 08/11/2010

Applicant	: Sanjay Wangoo	: DECISION ON REQUEST FOR
Patent Number	: 7657608	: RECALCULATION of PATENT
Issue Date	: 02/02/2010	: TERM ADJUSTMENT IN VIEW
Application No	: 10/675,737	: OF WYETH AND NOTICE OF INTENT TO
Filed	: 03/04/2004	: ISSUE CERTIFICATE OF CORRECTION
		:

The Request for Recalculation is **GRANTED** to the extent indicated.

The patent term adjustment has been determined to be **1083** days. The USPTO will *sua sponte* issue a certificate of correction reflecting the amount of PTA days determined by the recalculation.

Prior to the issuance of the certificate of correction, the USPTO will afford patentee an opportunity to be heard and request reconsideration. Accordingly, patentee has **one month or thirty (30) days**, whichever is longer, to file a request for reconsideration of this patent term adjustment calculation. See 35 U.S.C. 154(b)(3)(B)(ii) and 37 CFR 1.322(a)(4). No extensions of time will be granted under 37 CFR 1.136.

Patentee should use document code PET.OP if electronically filing a request for reconsideration of this patent term adjustment calculation. The patentee must also include the information required by 37 CFR 1.705(b)(2) and the fee required by 37 CFR 1.18(e). If patentee does not file a timely request for reconsideration of this patent term adjustment calculation including the information required by 37 CFR 1.705(b)(2) and the fee required by 37 CFR 1.18(e), the USPTO will issue a certificate of correction reflecting the PTA determination noted above.

Patentee should be aware that in order to preserve the right to review in the United States District Court for the District of Columbia of the USPTO patent term adjustment determination, patentee must ensure that he or she also take the steps required under 35 U.S.C. 154(b)(4)(A) in a timely manner. Nothing in the request for recalculation should be construed as providing an alternative time frame for commencing a civil action under 35 U.S.C. 154(b)(4)(A).

Any questions concerning this decision should be directed to the Office of Patent Legal Administration at 571-272-7702.

UNITED STATES PATENT AND TRADEMARK OFFICE

Commissioner for Patents
United States Patent and Trademark Office
P.O. Box 1450
Alexandria, VA 22313-1450
www.uspto.gov

KENNETH L. TOLAR
2908 HESSMER AVENUE
METAIRIE, LA 70002

MAILED
JUL 05 2011
OFFICE OF PETITIONS

In re Application of	:	
HONG, et al	:	
Application No. 10/675,746	:	DECISION ON PETITION
Filed: September 30, 2003	:	TO WITHDRAW
Attorney Docket No. HNG0001-US	:	FROM RECORD
	:	

This is a decision on the Request to Withdraw as attorney or agent of record under 37 C.F.R. § 1.36(b), filed June 8, 2011.

The request is **NOT APPROVED because it is moot.**

A review of the file record indicates that the power of attorney to Kenneth L. Tolar, has been revoked by the applicants of the patent application on June 10, 2011. Accordingly, the request to withdraw under 37 C.F.R. § 1.36(b) is moot.

All future communications from the Office will continue to be directed to the address first copied below until otherwise properly notified.

Telephone inquires concerning this decision should be directed to undersigned at (571) 272-6735.

/Diane C. Goodwyn/
Diane C. Goodwyn
Petitions Examiner
Office of Petitions

cc: KASHA LAW LLC
14532 DUFIEF MILL ROAD
NORTH POTOMAC, MD 20878

cc: BRIAN HONG
806 S. RIMPAU
LOS ANGELES CA 90005

UNITED STATES PATENT AND TRADEMARK OFFICE

UNITED STATES DEPARTMENT OF COMMERCE
United States Patent and Trademark Office
Address: COMMISSIONER FOR PATENTS
P.O. Box 1450
Alexandria, Virginia 22313-1450
www.uspto.gov

TUCKER ELLIS & WEST LLP
1150 HUNTINGTON BUILDING
925 EUCLID AVENUE
CLEVELAND, OH 44115-1414

Mail Date: 08/05/2010

Applicant	: Fabio M. Gava	: DECISION ON REQUEST FOR
Patent Number	: 7672880	: RECALCULATION of PATENT
Issue Date	: 03/02/2010	: TERM ADJUSTMENT IN VIEW
Application No	: 10/675,773	: OF WYETH
Filed	: 09/30/2003	:
		:

The Patentee's Request for Recalculation is **DISMISSED.**

This Request is deemed ineligible for consideration for one or more of the following reasons:

(A). The patent for which PTA recalculation is requested is either a design or reissue application or is a reexamination proceeding;

(B). The patent for which PTA recalculation is requested resulted from a utility or plant application filed under 35 USC 111(a) before May 29, 2000 and no CPA filed in the application on/after May 29, 2000;

(C). The patent for which PTA recalculation is requested resulted from an international application in which the international filing date was before May 29, 2000 and no CPA filed in the application on/after May 29, 2000;

(D). The patent for which PTA recalculation is requested issued on/after March 2, 2010;

(E). The Request for Recalculation was filed more than 180 days after the grant date of the patent and the request was not filed within two months of a dismissal of a request for reconsideration of the of the patent term under 37 CFR 1.705(d);

(F). The Request for Recalculation is not solely limited to USPTO pre-Wyeth interpretation of 35 U.S.C. 154(b)(2)(A);

or

(G). A civil action was filed pursuant to 35 U.S.C. 154(b)(4)(A)concerning the same patent at issue in this request.

Patentee may file a reply to this decision dismissing the Request for Recalculation. Patentee must file such reply within one month or thirty days, whichever is longer, of the mail date of the decision dismissing the Request for Recalculation. No fee is required if patentee is asserting in the reply that the dismissal for ineligibility is improper.

Patentee should use document code PET.OP if electronically filing a reply to this dismissal. If the USPTO finds that the request was improperly deemed ineligible, the USPTO will mail applicant a recalculation determination.

Patentee should be aware that in order to preserve the right to review in the United States District Court for the District of Columbia of the USPTO patent term adjustment determination, patentee must ensure that he or she also take the steps required under 35 U.S.C. 154(b)(4)(A). Nothing in the request for recalculation should be construed as providing an alternative time frame for commencing a civil action under 35 U.S.C. 154 (b)(4)(A).

Any questions concerning this decision should be directed to the Office of Patent Legal Administration at 571-272-7702.

UNITED STATES PATENT AND TRADEMARK OFFICE

COMMISSIONER FOR PATENTS
UNITED STATES PATENT AND TRADEMARK OFFICE
P.O. BOX 1450
ALEXANDRIA, VA 22313-1450
www.uspto.gov

MCANDREWS HELD & MALLOY, LTD
500 WEST MADISON STREET
SUITE 3400
CHICAGO IL 60661

MAILED
OCT 12 2010
OFFICE OF PETITIONS

In re Application :
Karaoguz, et al. :
Application No. 10/675,774 : PATENT TERM ADJUSTMENT
Filing or 371(c) Date: September 30, 2003 :
Dkt. No.: 14826US02 :

This is in response to the application for patent term adjustment under 37 CFR 1.705(b), filed September 9, 2010.

Applicant submits that the correct patent term adjustment to be indicated on the patent is 1847 days, not 857 days as calculated by the Office as of the mailing of the initial determination of patent term adjustment. Applicant requests this correction on the basis that the Office will take in excess of three years to issue this patent.

Insofar as the instant application for patent term adjustment requests reconsideration of the patent term adjustment as it relates to the Office's failure to issue the patent within 3 years of the filing date, the application for patent term adjustment under 37 CFR 1.705(b) is DISMISSED as PREMATURE.

Knowledge of the actual date the patent issues is required to calculate the amount, if any, of additional patent term patentee is entitled to for Office failure to issue the patent within 3 years. See, § 1.702(b). (This is true even where a request for continued examination (RCE) was filed). The computer will not undertake the § 1.702(b) calculation until the actual date of issuance of the patent has been determined. Likewise, the computer will not calculate any further Office delay under § 1.702(a)(4) or applicant delay under § 1.704(c)(10) until the actual date of issuance of the patent has been determined. As such, the Office can not make a determination on the correctness of the patent term adjustment until the patent has issued.

Requesting reconsideration of the patent term adjustment to be indicated on the patent based on the initial determination of patent term adjustment and a projected issuance date of the patent (or even the filing date of the request for continued examination) is premature. Accordingly, it is appropriate to dismiss as premature such a request.

Applicant is advised that they may wait until the time of the issuance of the patent and file a request for reconsideration of the patent term adjustment pursuant to 37 CFR 1.705(d). As the USPTO does not calculate the amount of time earned pursuant to 37 CFR 1.702(b) until the time

of the issuance of the patent, the Office will consider any request for reconsideration of the patent term adjustment due to an error in the calculation of 37 CFR 1.702(b) to be timely if the request for reconsideration is filed within two months of the issuance of the patent. However, as to all other bases for contesting the initial determination of patent term adjustment received with the notice of allowance, applicant must timely file an application for patent term adjustment prior to the payment of the issue fee[1].

Receipt is hereby acknowledged of the required patent term adjustment application fee under 37 CFR 1.705(b) of $200.00. See, 37 CFR 1.18(e).

However, any request for reconsideration of the patent term adjustment indicated on the patent must be timely filed within 2 months after issuance pursuant to 37 CFR 1.705(d) and **must** include payment of the required fee under 37 CFR 1.18(e).

The application file is being forwarded to the Office of Data Management for issuance of the patent. The patent term adjustment indicated on the patent (as shown on the Issue Notification mailed about three weeks prior to patent issuance) will include any additional adjustment accrued both for Office delay in issuing the patent more than four months after payment of the issue fee and satisfaction of all outstanding requirements, and for the Office taking in excess of three years to issue the patent (to the extent that the three-year period does not overlap with periods already accorded).

Telephone inquiries specific to this decision should be directed to the undersigned at (571) 272-3205.

/ALESIA M. BROWN/

Alesia M. Brown
Petitions Attorney
Office of Petitions

---

[1] For example, if applicant disputes both the calculation of patent term adjustment under 37 CFR 1.702(a)(1) for Office failure to mail a first Office action or notice of allowance not later than fourteen months after the date on which the application was filed and under 37 CFR 1.702(b) for Office failure to issue a patent within three years of the actual filing date of the application, then applicant must still timely file an application for patent term adjustment prior to the payment of the issue fee to contest the calculation of Office delay in issuing a first Office action or notice of allowance. See 37 CFR 1.705(b) and 35 U.S.C. 154(b)(3)(B). A dispute as to the calculation of the §1.702(a)(1) period raised on request for reconsideration of patent term adjustment under 37 CFR 1.705(d) will be dismissed as untimely filed.

UNITED STATES PATENT AND TRADEMARK OFFICE

Commissioner for Patents
United States Patent and Trademark Office
P.O. Box 1450
Alexandria, VA 22313-1450
www.uspto.gov

28171
ENZO BIOCHEM, INC.
527 Madison Avenue (9th Floor)
New York, NY 10022

MAILED
APR 12 2011
PCT LEGAL ADMINISTRATION

In re Application of :
ILAN *et al* :
Application No.: 10/676,045 :
Filing Date: September 30, 2003 : **DECISION**
Attorney Docket No.: Enz-63(CIP) :
For: EDUCATED NKT CELLS AND THEIR :
USES IN THE TREATMENT OF :
IMMUNE-RELATED DISORDERS :

This is a decision on the "Petition to Accept Unintentionally Delayed Priority Claim Under 35 U.S.C. 120" filed October 27, 2010, which is treated as a petition under 37 CFR 1.78(a)(3), to accept an unintentionally delayed claim under 35 U.S.C. § 120 for the benefit of priority to the prior-filed nonprovisional application.

The petition is **GRANTED**.

The present nonprovisional application was filed after November 29, 2000, and the claim herein for the benefit of priority to the prior-filed nonprovisional application is submitted after expiration of the period specified in 37 CFR 1.78(a)(2)(ii). Therefore, this is a proper petition under 37 CFR 1.78(a)(3).

(1) the reference required by 35 U.S.C. § 120 and 37 CFR 1.78(a)(2)(i) of the prior-filed application, unless previously submitted;
(2) the surcharge set forth in § 1.17(t); and
(3) a statement that the entire delay between the date the claim was due under 37 CFR 1.78(a)(2)(ii) and the date the claim was filed was unintentional. The Director may require additional information where there is a question whether the delay was unintentional.

The petition complies with the requirements for a grantable petition under 37 CFR §§ 1.78(a)(3) in that (1) a reference to the prior-filed nonprovisional application was submitted in an amendment filed with the subject petition in accordance with 37 CFR 1.121 to the first sentence of the specification following the title, as provided by 37 CFR 1.78(a)(2)(iii); (2) the surcharge fee required by 37 CFR 1.17(t) was charged to Deposit Account No. 05-1135 as authorized; and (3) applicants' statement in the subject petition is construed as meaning that "the entire delay between the date the claim was due under 37 CFR 1.78(a)(2)(ii) and the date the claim was filed was unintentional."

If this is incorrect, applicants **MUST IMMEDIATELY** notify the Office of PCT Legal

Administration. As so construed, then item (3) is satisfied.

Accordingly, having found that the petition for acceptance of an unintentionally delayed claim for the benefit of priority under 35 U.S.C. § 120 to the prior-filed nonprovisional application satisfies the conditions of 37 CFR § 1.78(a)(3), the petition is granted.

The granting of the petition to accept the delayed benefit claim to the prior-filed application under 37 CFR § 1.78(a)(3) should not be construed as meaning that this application is entitled to the benefit of the filing date of the prior-filed application. In order for this application to be entitled to the benefit of the prior-filed application, all other requirements under 35 U.S.C. §§120 and 365(c) and 1.78(a)(1) and (a)(2) must be met. Similarly, the fact that the corrected Filing Receipt accompanying this decision on petition includes the prior-filed application should not be construed as meaning that applicant is entitled to the claim for benefit of priority to the prior-filed application noted thereon. Accordingly, the examiner will, in due course, consider this benefit claim and determine whether this application is entitled to the benefit of the earlier filing date.

A corrected Filing Receipt, which includes the priority claim to the prior-filed application accompanies this decision on petition.

Any questions concerning this decision may be directed to James Thomson at (571) 272-3302.

This matter is being referred to Technology Center Art Unit 1644 for appropriate action on the amendment filed October 27, 2010, including consideration by the examiner of applicants' entitlement to claim benefit of priority under 35 U.S.C. § 120 to the prior-filed nonprovisional application.

Boris Milef
Legal Examiner
PCT Legal Administration

UNITED STATES PATENT AND TRADEMARK OFFICE

Commissioner for Patents
United States Patent and Trademark Office
P.O. Box 1450
Alexandria, VA 22313-1450
www.uspto.gov

THE NATH LAW GROUP
112 South West Street
Alexandria VA 22314

MAILED
JAN 24 2011
OFFICE OF PETITIONS

In re Patent No. 7,220,124 :
Issue Date: May 22, 2007 :
Application No. 10/676,257 : NOTICE
Filed: October 2, 2003 :
Attorney Docket No. 25749 :

This is a notice regarding your request for acceptance of a fee deficiency submission under 37 CFR 1.28 filed December 8, 2010. On September 1, 1998, the Court of Appeals for the Federal Circuit held that 37 CFR 1.28(c) is the sole provision governing the time for correction of the erroneous payment of the issue fee as a small entity. **See DH Technology v. Synergystex International, Inc. 154 F.3d 1333, 47 USPQ2d 1865 (Fed. Cir. Sept. 1, 1998).**

The Office no longer investigates or rejects original or reissue applications under 37 CFR 1.56. **1098 Off. Gaz. Pat. Office 502 (January 3, 1989)**. Therefore, nothing in this Notice is intended to imply that an investigation was done.

Your fee deficiency submission under 37 CFR 1.28 is hereby accepted. The petition is **GRANTED**.

This application is no longer entitled to small entity status. Accordingly, all future fees paid in this application must be paid at the large entity rate.

This file is being forwarded to Files Repository.

Telephone inquiries related to this decision should be directed to the Kimberly Inabinet at (571) 272-4618.

/Carl Friedman/
Carl Friedman
Petitions Examiner
Office of Petitions

UNITED STATES PATENT AND TRADEMARK OFFICE

Commissioner for Patents
United States Patent and Trademark Office
P.O. Box 1450
Alexandria, VA 22313-1450
www.uspto.gov

SMYRSKI LAW GROUP, A PROFESSIONAL CORPORATION
3310 AIRPORT AVENUE, SW
SANTA MONICA CA 90405

MAILED
MAY 17 2011
OFFICE OF PETITIONS

In re Application of	:	
Andrew J. OGLE	:	
Application No. 10/676,483	:	NOTICE
Patent No. 7,210,010	:	
Filed: September 30, 2003	:	
Attorney Docket No. INSG0011		

This is a notice regarding your request for acceptance of a fee deficiency submission under 37 CFR 1.28 April 21, 2011.

The Office no longer investigates or rejects original or reissue applications under 37 CFR 1.56. **1098 Off. Gaz. Pat. Office 502 (January 3, 1989)**. Therefore, nothing in this Notice is intended to imply that an investigation was done.

Your fee deficiency submission under 37 CFR 1.28 is hereby **ACCEPTED**.

This application is no longer entitled to small entity status. Accordingly, all future fees paid in this application must be paid at the large entity rate.

Inquiries related to this communication should be directed to the undersigned at (571) 272-2783.

/Tredelle D. Jackson/
Paralegal Specialist
Office of Petitions

UNITED STATES PATENT AND TRADEMARK OFFICE

Commissioner for Patents
United States Patent and Trademark Office
P.O. Box 1450
Alexandria, VA 22313-1450
www.uspto.gov

NIELDS, LEMACK & FRAME, LLC
176 E. MAIN STREET
SUITE #5
WESTBOROUGH MA 01581

MAILED
OCT 12 2011
OFFICE OF PETITIONS

In re Patent No. 7,276,163	:	
Issued: October 2, 2007	:	
Application No. 10/676,671	:	ON PETITION
Filed: October 1, 2003	:	
Attorney Docket Number: 647P003	:	

This is a notice regarding your request for acceptance of a fee deficiency submission under 37 CFR 1.28 filed September 23, 2011.

On September 1, 1998, the Court of Appeals for the Federal Circuit held that 37 CFR 1.28(c) is the sole provision governing the time for correction of the erroneous payment of the issue fee as a small entity. **See DH Technology v. Synergystex International, Inc. 154 F.3d 1333, 47 USPQ2d 1865 (Fed. Cir. Sept. 1, 1998).**

The Office no longer investigates or rejects original or reissue applications under 37 CFR 1.56. **1098 Off. Gaz. Pat. Office 502 (January 3, 1989).** Therefore, nothing in this Notice is intended to imply that an investigation was done.

Your fee deficiency submission under 37 CFR 1.28 is hereby **ACCEPTED.**

This patent is no longer entitled to small entity status. Accordingly, all future fees paid in this patent must be paid at the large entity rate.

However, an itemization of the total deficiency payment is required by 37 CFR 1.28(c)(2)(ii). The itemization must include the following information:

(A) Each particular type of fee that was erroneously paid as a small entity, (e.g., basic statutory filing fee, two-month extension of time fee) along with the current fee amount for a non-small entity;
(B) The small entity fee actually paid, and when. This will permit the Office to differentiate, for example, between two one-month extension of time fees erroneously paid as a small entity but on different dates;
(C) The deficiency owed amount (for each fee erroneously paid); and

(D) The total deficiency payment owed, which is the sum or total of the individual deficiency owed amounts set forth in paragraph (c)(2)(ii)(C) of this section.

If the requirements of 37 CFR 1.28(c)(2) are not complied with (i.e. not itemizing the total deficiency ,etc.), such failure will either: be treated as an authorization for the Office to process the deficiency payment and charge the processing fee set forth in § 1.17(i), or result in a requirement for compliance within a one-month non-extendable time period under § 1.136(a) to avoid the return of the fee deficiency paper, at the option of the Office.

Petitioner has not provided a proper itemization of the total deficiency payment of $555.00 and therefore petitioner's deposit account has been charged the $130.00 processing fee as set forth in 37 CFR 1.17(i).

Further, it is not apparent whether the person signing the instant petition was ever given a power of attorney or authorization of agent regarding this patent. In accordance with 37 CFR 1.34(a), the signature appearing on the petition shall constitute a representation to the United States Patent and Trademark Office that he/she is authorized to represent the particular party in whose behalf he/she acts. While, a courtesy copy of this decision is being mailed to the address given on the petition, the Office will mail all future correspondence solely to the address of record.

Telephone inquiries concerning this decision should be directed to the undersigned at (571) 272-7751.

/Joan Olszewski/
Joan Olszewski
Petitions Examiner
Office of Petitions

cc: Larry L. Coats
1400 Crescent Green, Suite 300
Cary, NC 27518

UNITED STATES PATENT AND TRADEMARK OFFICE

Commissioner for Patents
United States Patent and Trademark Office
P.O. Box 1450
Alexandria, VA 22313-1450
www.uspto.gov

MERCHANT & GOULD
SCIENTIFIC ATLANTA, A CISCO COMPANY
P.O. BOX 2903
MINNEAPOLIS MN 55402-0903

MAILED

AUG 29 2011

OFFICE OF PETITIONS

In re Application of	:	
Paul J. Claussen, et al.	:	
Application No. 10/676,968	:	DECISION GRANTING PETITION
Filed: October 1, 2003	:	UNDER 37 CFR 1.313(c)(2)
Attorney Docket No. 60374.0093USI1/968533	:	

This is a decision on the petition under 37 CFR 1.313(c)(2), filed, August 29, 2011 to withdraw the above-identified application from issue after payment of the issue fee.

The petition is **GRANTED**.

The above-identified application is withdrawn from issue for consideration of a submission under 37 CFR 1.114 (request for continued examination). *See* 37 CFR 1.313(c)(2).

Petitioner is advised that the issue fee paid on July 18, 2011 cannot be refunded. If, however, this application is again allowed, petitioner may request that it be applied towards the issue fee required by the new Notice of Allowance.[1]

Telephone inquiries should be directed to Terri Johnson at (571) 272-2991.

This application is being referred to Technology Center AU 2423 for processing of the request for continued examination under 37 CFR 1.114 and for consideration of the concurrently filed information disclosure statement.

/Terri Johnson/
Terri Johnson
Petitions Examiner
Office of Petitions

---

[1] *The request to apply the issue fee to the new Notice may be satisfied by completing and returning the new Part B – Fee(s) Transmittal Form (along with any balance due at the time of submission). Petitioner is advised that the Issue Fee Transmittal Form* ***must*** *be completed and timely submitted to avoid abandonment of the application.*

UNITED STATES PATENT AND TRADEMARK OFFICE

Commissioner for Patents
United States Patent and Trademark Office
P.O. Box 1450
Alexandria, VA 22313-1450
www.uspto.gov

JOHN P. O'BANION
O'BANION & RITCHEY LLP
400 CAPITOL MALL SUITE 1550
SACRAMENTO CA 95814

MAILED
FEB 03 2011
OFFICE OF PETITIONS

In re Patent No. 7,078,705	:	
Issued: July 18, 2006	:	
Application No. 10/677,040	:	ON PETITION
Filed: September 30, 2003	:	
Attorney Docket No. LAD02-124-1	:	

This is a decision on the petition under 37 CFR 1.378(c), filed December 13, 2010, to accept the delayed payment of a maintenance fee for the above-identified patent.

The petition is **GRANTED**.

This patent expired on July 19, 2010 for failure to pay the three and one-half year maintenance fee. Since this petition was submitted within twenty-four months after the six-month grace period provided in 37 CFR 1.362(e), the petition was timely filed under the provisions of 37 CFR 1.378(c).

The maintenance fee is hereby accepted and the above-identified patent is reinstated as of the mail date of this decision.

It is not apparent whether the statement of unintentional delay was signed by a person who would have been in a position of knowing that the delay in filing a timely response was unintentional. Nevertheless, in accordance with 37 CFR 10.18, the statement is accepted as constituting a certification of unintentional delay. However, in the event that petitioner has no knowledge that the delay in paying the maintenance fee was in fact unintentional, petitioner must make such an inquiry to ascertain that, in fact the delay was unintentional. If petitioner discovers that the delay in paying the maintenance fee was intentional, petitioner must so notify the Office.

Further, it is not apparent whether the person signing the instant petition was ever given a power of attorney or authorization of agent in the above-identified patent. In accordance with 37 CFR 1.34(a), the signature appearing on the petition shall constitute a representation to the United States Patent and Trademark Office that he/she is authorized

to represent the particular party in whose behalf he/she acts. While, a courtesy copy of this decision is being mailed to the address given on the petition, the Office will mail all future correspondence solely to the address of record.

Telephone inquiries concerning this decision should be directed to the undersigned at (571) 272-7751.

Joan Olszewski
Petitions Examiner
Office of Petitions

cc: Bruce H. Cottrell
LC-IP, MS A187
Los Alamos National Security, LLC
Los Alamos, NM 87545

UNITED STATES PATENT AND TRADEMARK OFFICE

Commissioner for Patents
United States Patent and Trademark Office
P.O. Box 1450
Alexandria, VA 22313-1450
www.uspto.gov

In re Patent No. 7214356
Issue Date: May 8,2007
Application No. 10677052
Filed: October 1,2003
Attorney Docket No. BELCO 3.0-001

:
:DECISION GRANTING PETITION
:UNDER 37 CFR 1.378(c)
:

This is a decision on the electronic petition, filed November 3,2011 ,under 37 CFR 1.378(c) to accept the unintentionally delayed payment of the 3.5 year maintenance fee for the above-identified patent.

The petition is **GRANTED**.

The maintenance fee is accepted, and the above-identified patent reinstated as of November 3,2011 . This decision also constitutes notice that the fee has been accepted. An electronic copy of the petition and this decision has been created as an entry in the Image File Wrapper. Nevertheless, petitioner should print and retain an independent copy.

Telephone inquiries related to this electronic decision should be directed to the Electronic Business Center at 1-866-217-9197.

PTO/SB/66 (03-09)
Approved for use through 03/31/2012. OMB 0651-0016
U.S. Patent and Trademark Office: U.S. DEPARTMENT OF COMMERCE
Under the Paperwork Reduction Act of 1995, no persons are required to respond to a collection of information unless it displays valid OMB control number.

PETITION TO ACCEPT UNINTENTIONALLY DELAYED PAYMENT OF MAINTENANCE FEE IN AN EXPIRED PATENT (37 CFR 1.378(c))

Patent Number	Issue Date (YYYY-MM-DD)	Application Number	Filing Date (YYYY-MM-DD)	Docket Number (if applicable)
7214356	2007-05-08	10677052	2003-10-01	CH3150USNA

CAUTION: Maintenance fee (and surcharge, if any) payment must correctly identify: (1) the patent number and (2) the application number of the actual U.S. application leading to issuance of that patent to ensure the fee(s) is/are associated with the correct patent. 37 CFR 1.366(c) and (d).

SMALL ENTITY
☐ Patentee claims, or has previously claimed, small entity status. See 37 CFR 1.27.

LOSS OF ENTITLEMENT TO SMALL ENTITY STATUS
☐ Patentee is no longer entitled to small entity status. See 37 CFR 1.27(g)

NOT Small Entity			Small Entity		
	Fee	Code		Fee	Code
◉	3 ½ year	(1551)	○	3 ½ year	(2551)
○	7 ½ year	(1552)	○	7 ½ year	(2552)
○	11 ½ year	(1553)	○	11 ½ year	(2553)

SURCHARGE
The surcharge required by 37 CFR 1.20(i)(2) (Fee Code 1558) must be paid as a condition of accepting unintentionally delayed payment of the maintenance fee.

MAINTENANCE FEE (37 CFR 1.20(e)-(g))
The appropriate maintenance fee must be submitted with this petition.

STATEMENT
THE UNDERSIGNED CERTIFIES THAT THE DELAY IN PAYMENT OF THE MAINTENANCE FEE TO THIS PATENT WAS UNINTENTIONAL

PETITIONER(S) REQUEST THAT THE DELAYED PAYMENT OF THE MAINTENANCE FEE BE ACCEPTED AND THE PATENT REINSTATED

THIS PORTION MUST BE COMPLETED BY THE SIGNATORY OR SIGNATORIES

37 CFR 1.378(d) states: "Any petition under this section must be signed by an attorney or agent registered to practice before the Patent and Trademark Office, or by the patentee, the assignee, or other party in interest."

I certify, in accordance with 37 CFR 1.4(d)(4) that I am

◉ An attorney or agent registered to practice before the Patent and Trademark Office

○ A sole patentee

○ A joint patentee; I certify that I am authorized to sign this submission on behalf of all the other patentees.

○ A joint patentee; all of whom are signing this e-petition

○ The assignee of record of the entire interest

Under the Paperwork Reduction Act of 1995, no persons are required to respond to a collection of information unless it displays valid OMB control number.

Patent Practitioner			
A signature of the applicant or representative is required in accordance with 37 CFR 1.33 and 10.18. Please see 37 CFR 1.4(d) for the form of the signature			
Signature	/Kathryn M. Sanchez/	Date (YYYY-MM-DD)	2011-11-03
Name	Kathryn M. Sanchez	Registration Number	43081

This collection of information is required by 37 CFR 1.378(c). The information is required to obtain or retain a benefit by the public which is to file (and by the USPTO to process) an application. Confidentiality is governed by 35 U.S.C. 122 and 37 CFR 1.11 and 1.14. This collection is estimated to take 1 hour to complete, including gathering, preparing, and submitting the completed application form to the USPTO. Time will vary depending upon the individual case. Any comments on the amount of time you require to complete this form and/ or suggestions for reducing this burden, should be sent to the Chief Information Officer, U.S. Patent and Trademark Office, U.S. Department of Commerce, P.O. Box 1450, Alexandria, VA 22313-1450. DO NOT SEND FEES OR COMPLETED FORMS TO THIS ADDRESS. **This form can only be used when in conjunction with EFS-Web. If this form is mailed to the USPTO, it may cause delays in reinstating the patent.**

Privacy Act Statement

The Privacy Act of 1974 (P.L. 93-579) requires that you be given certain information in connection with your submission of the attached form related to a patent application or patent. Accordingly, pursuant to the requirements of the Act, please be advised that: (1) the general authority for the collection of this information is 35 U.S.C. 2(b)(2); (2) furnishing of the information solicited is voluntary; and (3) the principal purpose for which the information is used by the U.S. Patent and Trademark Office is to process and/or examine your submission related to a patent application or patent. If you do not furnish the requested information, the U.S. Patent and Trademark Office may not be able to process and/or examine your submission, which may result in termination of proceedings or abandonment of the application or expiration of the patent.

The information provided by you in this form will be subject to the following routine uses:

1. The information on this form will be treated confidentially to the extent allowed under the Freedom of Information Act (5 U.S.C. 552) and the Privacy Act (5 U.S.C. 552a). Records from this system of records may be disclosed to the Department of Justice to determine whether the Freedom of Information Act requires disclosure of these records.

2. A record from this system of records may be disclosed, as a routine use, in the course of presenting evidence to a court, magistrate, or administrative tribunal, including disclosures to opposing counsel in the course of settlement negotiations.

3. A record in this system of records may be disclosed, as a routine use, to a Member of Congress submitting a request involving an individual, to whom the record pertains, when the individual has requested assistance from the Member with respect to the subject matter of the record.

4. A record in this system of records may be disclosed, as a routine use, to a contractor of the Agency having need for the information in order to perform a contract. Recipients of information shall be required to comply with the requirements of the Privacy Act of 1974, as amended, pursuant to 5 U.S.C. 552a(m).

5. A record related to an International Application filed under the Patent Cooperation Treaty in this system of records may be disclosed, as a routine use, to the International Bureau of the World Intellectual Property Organization, pursuant to the Patent Cooperation Treaty.

6. A record in this system of records may be disclosed, as a routine use, to another federal agency for purposes of National Security review (35 U.S.C. 181) and for review pursuant to the Atomic Energy Act (42 U.S.C. 218(c)).

7. A record from this system of records may be disclosed, as a routine use, to the Administrator, General Services, or his/her designee, during an inspection of records conducted by GSA as part of that agency's responsibility to recommend improvements in records management practices and programs, under authority of 44 U.S.C. 2904 and 2906. Such disclosure shall be made in accordance with the GSA regulations governing inspection of records for this purpose, and any other relevant (i.e., GSA or Commerce) directive. Such disclosure shall not be used to make determinations about individuals.

8. A record from this system of records may be disclosed, as a routine use, to the public after either publication of the application pursuant to 35 U.S.C. 122(b) or issuance of a patent pursuant to 35 U.S.C. 151. Further, a record may be disclosed, subject to the limitations of 37 CFR 1.14, as a routine use, to the public if the record was filed in an application which became abandoned or in which the proceedings were terminated and which application is referenced by either a published application, an application open to public inspections or an issued patent.

9. A record from this system of records may be disclosed, as a routine use, to a Federal, State, or local law enforcement agency, if the USPTO becomes aware of a violation or potential violation of law or regulation.

SPE RESPONSE FOR CERTIFICATE OF CORRECTION

Paper No.: _____

DATE : 3/14/2011

TO SPE OF : ART UNIT 2195 An Meng Ai (Meng) T (Spe)

SUBJECT : Request for Certificate of Correction for Appl. No.: 10/677159 Patent No.: 7805723

CofC mailroom date: 3/3/2011

Please respond to this request for a certificate of correction within 7 days.

FOR IFW FILES:

Please review the requested changes/corrections as shown in the **COCIN** document(s) in the IFW application image. No new matter should be introduced, nor should the scope or meaning of the claims be changed.

Please complete the response (see below) and forward the completed response to scanning using document code **COCX**.

FOR PAPER FILES:

Please review the requested changes/corrections as shown in the attached certificate of correction. Please complete this form (see below) and forward it with the file to:

Certificates of Correction Branch (CofC)
Randolph Square – 9D10-A
Palm Location 7580

Certificates of Correction Branch
703-756-1571 _____

Thank You For Your Assistance

The request for issuing the above-identified correction(s) is hereby:
Note your decision on the appropriate box.

- ☒ **Approved** — All changes apply.
- ☐ **Approved in Part** — Specify below which changes **do not** apply.
- ☐ **Denied** — State the reasons for denial below.

Comments: _____

SPE

2195
Art Unit

UNITED STATES PATENT AND TRADEMARK OFFICE

Commissioner for Patents
United States Patent and Trademark Office
P.O. Box 1450
Alexandria, VA 22313-1450
www.uspto.gov

K&L GATES LLP
210 SIXTH AVENUE
PITTSBURGH PA 15222-2613

MAILED
DEC 22 2010
OFFICE OF PETITIONS

In re Application of
Savasoglu et al.
Application No. 10/677,172
Filed: October 2, 2003
Attorney Docket No. 030586

DECISION ON PETITION
TO WITHDRAW FROM RECORD

This is a decision on the Request to Withdraw as attorney or agent of record under 37 C.F.R. § 1.36(b), filed November 3, 2010.

The request is **APPROVED**.

A grantable request to withdraw as attorney/agent of record must be signed by every attorney/agent seeking to withdraw or contain a clear indication that one attorney is signing on behalf of another/others. The Office will require the practitioner(s) to certify that he, she or they have: (1) given reasonable notice to the client, prior to the expiration of the reply period, which the practitioner(s) intends to withdraw from employment; (2) delivered to the client or a duly authorized representative of the client all papers and property (including funds) to which the client is entitled; and (3) notified the client of any replies that may be due and the time frame within which the client must respond, pursuant to 37 CFR 10.40 (c).

The request was signed by Daniel R. Miller on behalf of himself. Accordingly, Daniel R. Miller associated with the above-identified application has been withdrawn as attorney of record in the above-identified application.

The correspondence address of record remains unchanged.

Currently, a Notice of Allowance was mailed October 22, 2010 in the above-identified application.

Telephone inquiries concerning this decision should be directed to the undersigned at (571) 272-7751. All other inquires concerning either the examination or status of the application should be directed to the Technology Center.

Joan Olszewski

Joan Olszewski
Petitions Examiner
Office of Petitions

PTO/SB/66 (03-09)
Approved for use through 03/31/2012. OMB 0651-0016
U.S. Patent and Trademark Office: U.S. DEPARTMENT OF COMMERCE
Under the Paperwork Reduction Act of 1995, no persons are required to respond to a collection of information unless it displays valid OMB control number.

PETITION TO ACCEPT UNINTENTIONALLY DELAYED PAYMENT OF MAINTENANCE FEE IN AN EXPIRED PATENT (37 CFR 1.378(c))

Patent Number	Issue Date (YYYY-MM-DD)	Application Number	Filing Date (YYYY-MM-DD)	Docket Number (if applicable)
7161485	2007-01-09	10677503	2003-10-02	225-001

CAUTION: Maintenance fee (and surcharge, if any) payment must correctly identify: (1) the patent number and (2) the application number of the actual U.S. application leading to issuance of that patent to ensure the fee(s) is/are associated with the correct patent. 37 CFR 1.366(c) and (d).

SMALL ENTITY
☒ Patentee claims, or has previously claimed, small entity status. See 37 CFR 1.27.

LOSS OF ENTITLEMENT TO SMALL ENTITY STATUS
☐ Patentee is no longer entitled to small entity status. See 37 CFR 1.27(g)

NOT Small Entity		Small Entity	
Fee	Code	Fee	Code
○ 3 ½ year	(1551)	◉ 3 ½ year	(2551)
○ 7 ½ year	(1552)	○ 7 ½ year	(2552)
○ 11 ½ year	(1553)	○ 11 ½ year	(2553)

SURCHARGE
The surcharge required by 37 CFR 1.20(i)(2) (Fee Code 1558) must be paid as a condition of accepting unintentionally delayed payment of the maintenance fee.

MAINTENANCE FEE (37 CFR 1.20(e)-(g))
The appropriate maintenance fee must be submitted with this petition.

STATEMENT
THE UNDERSIGNED CERTIFIES THAT THE DELAY IN PAYMENT OF THE MAINTENANCE FEE TO THIS PATENT WAS UNINTENTIONAL

PETITIONER(S) REQUEST THAT THE DELAYED PAYMENT OF THE MAINTENANCE FEE BE ACCEPTED AND THE PATENT REINSTATED

THIS PORTION MUST BE COMPLETED BY THE SIGNATORY OR SIGNATORIES

37 CFR 1.378(d) states: "Any petition under this section must be signed by an attorney or agent registered to practice before the Patent and Trademark Office, or by the patentee, the assignee, or other party in interest."

I certify, in accordance with 37 CFR 1.4(d)(4) that I am

◉ An attorney or agent registered to practice before the Patent and Trademark Office

○ A sole patentee

○ A joint patentee; I certify that I am authorized to sign this submission on behalf of all the other patentees.

○ A joint patentee; all of whom are signing this e-petition

○ The assignee of record of the entire interest

Under the Paperwork Reduction Act of 1995, no persons are required to respond to a collection of information unless it displays valid OMB control number.

Patent Practitioner			
A signature of the applicant or representative is required in accordance with 37 CFR 1.33 and 10.18. Please see 37 CFR 1.4(d) for the form of the signature			
Signature	/Jennifer Meredith/	Date (YYYY-MM-DD)	2011-05-24
Name	Jennifer Meredith	Registration Number	47790

This collection of information is required by 37 CFR 1.378(c). The information is required to obtain or retain a benefit by the public which is to file (and by the USPTO to process) an application. Confidentiality is governed by 35 U.S.C. 122 and 37 CFR 1.11 and 1.14. This collection is estimated to take 1 hour to complete, including gathering, preparing, and submitting the completed application form to the USPTO. Time will vary depending upon the individual case. Any comments on the amount of time you require to complete this form and/ or suggestions for reducing this burden, should be sent to the Chief Information Officer, U.S. Patent and Trademark Office, U.S. Department of Commerce, P.O. Box 1450, Alexandria, VA 22313-1450. DO NOT SEND FEES OR COMPLETED FORMS TO THIS ADDRESS. **This form can only be used when in conjunction with EFS-Web. If this form is mailed to the USPTO, it may cause delays in reinstating the patent.**

Privacy Act Statement

The Privacy Act of 1974 (P.L. 93-579) requires that you be given certain information in connection with your submission of the attached form related to a patent application or patent. Accordingly, pursuant to the requirements of the Act, please be advised that: (1) the general authority for the collection of this information is 35 U.S.C. 2(b)(2); (2) furnishing of the information solicited is voluntary; and (3) the principal purpose for which the information is used by the U.S. Patent and Trademark Office is to process and/or examine your submission related to a patent application or patent. If you do not furnish the requested information, the U.S. Patent and Trademark Office may not be able to process and/or examine your submission, which may result in termination of proceedings or abandonment of the application or expiration of the patent.

The information provided by you in this form will be subject to the following routine uses:

1. The information on this form will be treated confidentially to the extent allowed under the Freedom of Information Act (5 U.S.C. 552) and the Privacy Act (5 U.S.C. 552a). Records from this system of records may be disclosed to the Department of Justice to determine whether the Freedom of Information Act requires disclosure of these records.

2. A record from this system of records may be disclosed, as a routine use, in the course of presenting evidence to a court, magistrate, or administrative tribunal, including disclosures to opposing counsel in the course of settlement negotiations.

3. A record in this system of records may be disclosed, as a routine use, to a Member of Congress submitting a request involving an individual, to whom the record pertains, when the individual has requested assistance from the Member with respect to the subject matter of the record.

4. A record in this system of records may be disclosed, as a routine use, to a contractor of the Agency having need for the information in order to perform a contract. Recipients of information shall be required to comply with the requirements of the Privacy Act of 1974, as amended, pursuant to 5 U.S.C. 552a(m).

5. A record related to an International Application filed under the Patent Cooperation Treaty in this system of records may be disclosed, as a routine use, to the International Bureau of the World Intellectual Property Organization, pursuant to the Patent Cooperation Treaty.

6. A record in this system of records may be disclosed, as a routine use, to another federal agency for purposes of National Security review (35 U.S.C. 181) and for review pursuant to the Atomic Energy Act (42 U.S.C. 218(c)).

7. A record from this system of records may be disclosed, as a routine use, to the Administrator, General Services, or his/her designee, during an inspection of records conducted by GSA as part of that agency's responsibility to recommend improvements in records management practices and programs, under authority of 44 U.S.C. 2904 and 2906. Such disclosure shall be made in accordance with the GSA regulations governing inspection of records for this purpose, and any other relevant (i.e., GSA or Commerce) directive. Such disclosure shall not be used to make determinations about individuals.

8. A record from this system of records may be disclosed, as a routine use, to the public after either publication of the application pursuant to 35 U.S.C. 122(b) or issuance of a patent pursuant to 35 U.S.C. 151. Further, a record may be disclosed, subject to the limitations of 37 CFR 1.14, as a routine use, to the public if the record was filed in an application which became abandoned or in which the proceedings were terminated and which application is referenced by either a published application, an application open to public inspections or an issued patent.

9. A record from this system of records may be disclosed, as a routine use, to a Federal, State, or local law enforcement agency, if the USPTO becomes aware of a violation or potential violation of law or regulation.

UNITED STATES PATENT AND TRADEMARK OFFICE

Commissioner for Patents
United States Patent and Trademark Office
P.O. Box 1450
Alexandria, VA 22313-1450
www.uspto.gov

In re Patent No. 7161485
Issue Date: January 9,2007
Application No. 10677503
Filed: October 2,2003
Attorney Docket No. 225-001

:
:DECISION GRANTING PETITION
:UNDER 37 CFR 1.378(c)
:

This is a decision on the electronic petition, filed May 24,2011 ,under 37 CFR 1.378(c) to accept the unintentionally delayed payment of the 3.5 year maintenance fee for the above-identified patent.

The petition is **GRANTED**.

The maintenance fee is accepted, and the above-identified patent reinstated as of May 24,2011 .
This decision also constitutes notice that the fee has been accepted. An electronic copy of the petition and this decision has been created as an entry in the Image File Wrapper. Nevertheless, petitioner should print and retain an independent copy.

Telephone inquiries related to this electronic decision should be directed to the Electronic Business Center at 1-866-217-9197.

UNITED STATES PATENT AND TRADEMARK OFFICE

Commissioner for Patents
United States Patent and Trademark Office
P.O. Box 1450
Alexandria, VA 22313-1450
www.uspto.gov

MAILED

OCT 25 2010

OFFICE OF PETITIONS

MATTHEW R. JENKINS, ESQ.
2310 FAR HILLS BUILDING
DAYTON OH 45419

In re Patent No. 7,069,636	:	
Issue Date: July 4, 2006	:	
Application No. 10/677,577	:	DECISION ON PETITION
Filed: October 2, 2003	:	
Attorney Docket No. SHE 027 P2	:	

This is a decision on the Request For A Patent To Be Corrected To State Name Of Assignee Under 37 C.F.R. §3.81(b), filed September 17, 2010, requesting correction on the Title Page of the subject patent to identify the correct assignee's name. The Request is being treated as a Petition Under 37 CFR §3.81(b). A completed Certificate of Correction Form (PTO/SB/44) was submitted with Petition.

The petition under 37 CFR §3.81(b) is **GRANTED**.

Petitioner requests that the present Petition was submitted to correct the assignee's name on the previously submitted PTOL 85B. Accordingly, petitioner requests, in effect, that the Title Page of the above-identified patent be corrected, via issuance of Certificate of Correction, to correct the assignee's name identified thereon from:

"Euroflamm Select Inc."

to:

--Sulzer Euroflamm US Inc.--

37 CFR 3.81(b), effective June 25, 2004, reads:

> *After payment of the issue fee:* Any request for issuance of an application in the name of the assignee submitted after the date of payment of the issue fee, and any request for a patent to be corrected to state the name of the assignee, must state that the assignment was submitted for recordation as set forth in § 3.11 before issuance of the patent, and must include a request for a certificate of correction under § 1.323 of this chapter (accompanied by the fee set forth in § 1.20(a) and the processing fee set forth in § 1.17(i) of this chapter.

The requisite $130.00 processing fee (Fee Code 1464), as set forth under 37 CFR 1.17(i), and the requisite $100.00 fee (Fee Code 1811), as set forth under 37 CFR 1.20(a), have been submitted. Further, Office assignment records are consistent with the requested correction. Accordingly, since the Petition complies with the provisions of 37 CFR 3.81(b), it is appropriate for the Office to issue a Certificate of Correction in accordance with the content at Item (73) on the Form PTO/SB/44 submitted with the present petition.

However, petitioner requests several corrections to be made in Item (56) and in The Columns. Therefore, these corrections will be handled directly in the Certificate of Correction Branch.

Inquiries related this communication should be directed to the undersigned at (571)272-3213.

Any questions concerning the issuance of a Certificate of Correction should be directed to the Certificates of Correction Branch at (571) 272-4200.

This matter is being referred to the Certificates of Correction Branch for processing of a Certificate of Correction in U.S. Patent No. 7,069,636.

Cheryl Gibson-Baylor
Petitions Examiner
Office of Petitions

UNITED STATES PATENT AND TRADEMARK OFFICE

Commissioner for Patents
United States Patent and Trademark Office
P.O. Box 1450
Alexandria, VA 22313-1450
www.uspto.gov

JAMES MARC LEAS
LAW OFFICE OF JAMES MARC LEAS
37 BUTLER DRIVE
S. BURLINGTON, VT 05403

MAILED

SEP 2 0 2010

OFFICE OF PETITIONS

In re Application of	:	
David L. Churchill, et al.	:	
Application No.: 10/677,578	:	ON PETITION
Filed: October 2, 2003	:	
Attorney Docket No.: 115-007	:	

This is a decision on the petition, filed September 20, 2010, under 37 CFR 1.313(c)(2) to withdraw the above-identified application from issue after payment of the issue fee.

The petition is **GRANTED**.

The above-identified application is withdrawn from issue for consideration of a submission under 37 CFR 1.114 (request for continued examination). See 37 CFR 1.313(c)(2).

Petitioner is advised that the issue fee paid on August 19, 2010, cannot be refunded. If, however, this application is again allowed, petitioner may request that it be applied towards the issue fee required by the new Notice of Allowance.[1]

Telephone inquiries relating to this decision should be directed to the undersigned at (571) 272-3204.

The application is being referred to Technology Center AU 2858 for further processing of the request for continued examination under 37 CFR 1.114 and for consideration of the concurrently filed Information Disclosure Statement (IDS).

/SDB/

Sherry D. Brinkley
Petitions Examiner
Office of Petitions

[1] *The request to apply the issue fee to the new Notice may be satisfied by completing and returning the new Part B – Fee(s) Transmittal Form (along with any balance due at the time of submission). Petitioner is advised that the Issue Fee Transmittal Form must be completed and timely submitted to avoid abandonment of the application.*

UNITED STATES PATENT AND TRADEMARK OFFICE

Commissioner for Patents
United States Patent and Trademark Office
P.O. Box 1450
Alexandria, VA 22313-1450
www.uspto.gov

JAMES MARC LEAS
Law Office Of James Marc Leas
37 BUTLER DRIVE
S. BURLINGTON VT 05403

MAILED
APR 22 2011
OFFICE OF PETITIONS

In re Application of	:	
Churchill, et al.	:	DECISION ON APPLICATIONS
Application No. 10/677,578	:	FOR PATENT TERM ADJUSTMENT
Filed: October 2, 2003	:	& NOTICE OF ABANDONMENT
Attorney Docket No. 115-007	:	

This is a decision on the "Application for patent term adjustment under 37 CFR 1.705(b)" and the "Petition under 37 CFR 1.183," both filed September 17, 2010. In addition, this decision addresses the "Renewed application for patent term adjustment under 37 CFR 1.705(b)," filed October 29, 2010. Applicants request that the initial determination of patent term adjustment under 35 U.S.C. 154(b) be corrected from thirty-three (33) days to one thousand two hundred forty-one (1241) days.

The petition under 37 CFR 1.705(b), filed September 17, 2010, is **dismissed** as untimely filed.

The petition under 37 CFR 1.183 to waive 37 CFR 1.705(b), filed September 17, 2010, is **dismissed.**

The petition under 37 CFR 1.705(b), filed October 29, 2010, is **dismissed.**

35 U.S.C. 154(b) provides for patent term adjustment for examination delay. Pursuant to 35 U.S.C. 154(b)(3)(B) and implementing regulation 37 C.F.R. § 1.705, an applicant shall receive an initial determination of patent term adjustment with the mailing of the Notice of Allowance and shall be given one opportunity to request reconsideration of that determination by way of filing of an application for patent term adjustment prior to the payment of the issue fee.

On June 3, 2010, the Office mailed the Determination of Patent Term Adjustment under 35 U.S.C. 154(b) in the above-identified

application. The Notice stated that the patent term adjustment (PTA) to date is 33 days. This determination was based in part on the period of adjustment entered for Office delay in mailing an Office action in response to an amendment filed October 10, 2006. PALM records indicate that the issue fee payment was received in the Office on August 19, 2010. No filing of an application for patent term adjustment preceded the payment of the issue fee. The period for filing an application for patent term adjustment requesting reconsideration of the initial determination of patent term adjustment at the time of mailing of the notice of allowance ended August 19, 2010. Accordingly, it is appropriate to dismiss the petition under 37 CFR 1.705(b) as untimely filed.

Petitioners request waiver of 37 CFR 1.705(b) under 37 CFR 1.183.

37 C.F.R. § 1.183 states,

> In an extraordinary situation, when justice requires, any requirement of the regulations in this part which is not a requirement of the statutes may be suspended or waived by the Director or the Director's designee, *sua sponte*, or on petition of the interested party, subject to such other requirements as may be imposed. Any petition under this section must be accompanied by the petition fee set forth in § 1.17(f).

In determining when waiver is appropriate, the Office *may* consider the circumstances when courts have exercised their equitable powers to waive requirements of a statute or regulation on behalf of a party. Courts are permitted to waive certain statutory requirements such as time limits.[1] Courts, in determining when waiver is proper, have required due diligence and required more than a "garden variety claim of excusable neglect."[2] The Federal Circuit has stated, "Equitable powers . . . should not be invoked to excuse the performance of a condition

---

[1] See Wood-Ivey Sys. Corp. v United States, 4 F.3d 961, 964 (Fed. Cir. 1993) (Plager, J., concurring) ("Since Irwin [v. Department of Veterans Affairs, 498 U.S. 89, 112 L. Ed. 2d 435, 111 S. Ct. 453, (1990)], compliance with statutory time limits is no longer jurisdictional, in the old sense that when a Congressionally specified time limit had expired a court had no power to entertain the case. The presumption is now to the contrary. The court has jurisdiction to entertain the suit and to determine on the merits if equitable relief from the time bar is warranted.")

[2] See Wiggins v. State Farm Fire and Casualty Co., 153 F. Supp. 2d 16, 21 (D. D.C. 2001) ("A court can equitably toll the statute of limitations . . . plaintiff will not be allowed extra time to file unless he has exercised due diligence, and the plaintiff's excuse must be more than a 'garden variety claim of excusable neglect.'") (citations omitted).

by a party that has not acted with reasonable due care and diligence."[3]

Factors which may not justify tolling include: pro se status, illiteracy, deafness, lack of legal training, lack of knowledge of the law, lack of knowledge of a legal process, and lack of legal representation.[4]

An attorney's lack of knowledge, misinterpretation of a law, miscalculation of a time period, and failure to exercise due care and diligence will not justify waiver.[5]

An attorney failing to meet a clear deadline set in the rules of the Office is not an extraordinary situation and justice does not require waiver of the rules. The petition under 37 CFR 1.183 to waive 37 CFR 1.705(b) is **DISMISSED**.

---

[3] U.S. v. Lockheed Petroleum Services, 709 F.2d 1472, 1475 (Fed. Cir. 1983) (citations omitted) ("Lockheed had several means at its disposal which it could have employed to guarantee compliance with the regulation, yet it neglected to use any of them. Equitable powers . . . should not be invoked to excuse the performance of a condition by a party that has not acted with reasonable due care and diligence."); See also Grymes v. Sanders et al., 93 U.S. 55, 61; 23 L. Ed. 798, 801 (1876) ("Mistake, to be available in equity, must not have arisen from negligence. . . . The party complaining must have exercised at least the degree of diligence 'which may be fairly expected from a reasonable person.') (citing Kerr on Fraud and Mistake, 407); Garcia v. Office of Personnel Management, 2001 U.S. App. LEXIS 21616, 6 (Fed. Cir. 2001) ("Equity will not intervene, however, to protect a claimant from his or her own failure to exercise due diligence in preserving their legal rights.") (citing Irwin v. Department of Veterans Affairs, 498 U.S. 89, 95 (1990)); Goetz & Goetz v. Secretary of Health and Human Services, 2001 U.S. App. LEXIS 943, 5 (Fed. Cir. 2001) ("the special master's finding of a lack of due diligence was not arbitrary, capricious, or an abuse of discretion, and precludes the application of equitable tolling.") (citing Baldwin County Welcome Ctr. V. Brown, 466 U.S. 147, 151, 80 L. Ed. 2d 196, 104 S. Ct. 1723 (1984) which states, "One who fails to act diligently cannot invoke equitable principles to excuse their lack of diligence.")

[4] See Felder v. Johnson, 204 F.3d 168 171-172 (5th Cir. 2000) (Pro se status is not "rare and exceptional" circumstance, but is typical of those bringing a 28 U.S.C. § 2254 claim. "Mere ignorance of the law or lack of knowledge of filing deadlines does not justify equitable tolling or other exceptions to a law's requirements.") (citing United States v. Flores, 981 F.2d 231, 236 (5th Cir. 1993) as "holding pro se status, illiteracy, deafness, and lack of legal training are not external factors excusing abuse of the writ."); citing Barrow v. New Orleans S.S. Ass'n, 932 F.2d 473, 478 (5th Cir. 1991) as "holding equitable tolling . . . within the Age Discrimination in Employment Act not warranted by plaintiff's unfamiliarity with legal process, his lack of representation, or his ignorance of his legal rights." (other citations omitted)).

[5] See Harris v. Hutchinson, 209 F.3d 325, 330-331 (4th Cir. 2000) (Plaintiff argues that he relied on "negligent and erroneous advice" of his attorney. Attorney agrees his advice was erroneous. The court holds, "[A] mistake by a party's counsel in interpreting a statute of limitations does not present the extraordinary circumstance beyond the party's control where equity should step in to give the party the benefit of his erroneous understanding.") (citing Taliani v. Chrans, 189 F.3d 597, 598 (7th Cir. 1999) as "holding that a lawyer's miscalculation of a limitations period is not a valid basis for equitable tolling."; citing Sandvik v. United States, 177 F.3d 1269, 1272 (11th Cir. 1999) (per curiam) as "refusing to toll the limitations period where the prisoner's delay was assertedly the result of a lawyer's decision to mail the petition by ordinary mail rather than to use some form of expedited delivery."; citing Gilbert v. Secretary of Health and Human Services, 51 F.3d 254, 257 (Fed. Cir. 1995) as "holding that a lawyer's mistake is not a valid basis for equitable tolling."; other citations omitted.)

It is noted on September 20, 2010, applicants filed a petition to withdraw from issue along with a request for continued examination (RCE) and Information Disclosure Statement (IDS). By decision mailed September 20, 2010, the withdrawal from issue was granted. Prosecution was reopened.

A new Notice of Allowance was mailed on September 29, 2010 and applicants filed a second application for patent term adjustment under 37 CFR 1.705(b) on October 29, 2010.

Unfortunately, applicants did not timely respond to the September 29, 2010 Notice of Allowance and Fee(s) Due, which set a three month period for reply. This application became abandoned on December 30, 2010. No Notice of Abandonment has been mailed.

Applicants must file a petition under 37 CFR 1.137(b).

A grantable petition pursuant to 37 CFR 1.137(b) must be accompanied by:

(1) the required reply, unless previously filed;

(2) the petition fee as set forth in 37 CFR 1.17(m);

(3) a statement that the **entire** delay in filing the required reply from the due date for the reply until the filing of a grantable petition pursuant to 37 CFR 1.137(b) was unintentional. The Director may require additional information where there is a question whether the delay was unintentional; and

(4) any terminal disclaimer (and fee set forth in 37 CFR 1.20(d))required pursuant to 37 CFR 1.137(d).

Applicants must return a completed PTOL-85B or an equivalent, requesting reapplication of the previously paid issue fee as their reply. See Notice of Allowance and Fee(s) Due. How to Reply to This Notice: II. Part B - Fee(s) Transmittal.

In addition, the merits of the second petition under 37 CFR 1.705(b), filed October 29, 2010, will not be addressed until applicants pay the required $200.00 petition fee.

Further correspondence with respect to this matter should be delivered through one of the following mediums:

By mail: Mail Stop PETITIONS
Commissioner for Patents
Post Office Box 1450
Alexandria, VA 22313-1450

By hand: Customer Service Window
Mail Stop Petitions
Randolph Building
401 Dulany Street
Alexandria, VA 22314

By fax: (571) 273-8300
ATTN: Office of Petitions

By internet: EFS-Web
www.uspto.gov/ebc/efs_help.html
(for help using EFS-Web call the Patent Electronic Business Center at (866) 217-9197)

Any questions concerning this matter may be directed to the undersigned at (571) 272-3230.

Shirene Willis Brantley

Shirene Willis Brantley
Senior Petitions Attorney
Office of Petitions

Doc Code: PET.AUTO Document Description: Petition automatically granted by EFS-Web	PTO/SB/64 U.S. Patent and Trademark Office Department of Commerce

Electronic Petition Request	PETITION FOR REVIVAL OF AN APPLICATION FOR PATENT ABANDONED UNINTENTIONALLY UNDER 37 CFR 1.137(b)
Application Number	10677578
Filing Date	02-Oct-2003
First Named Inventor	David Churchill
Art Unit	2858
Examiner Name	KENNETH WHITTINGTON
Attorney Docket Number	115-007
Title	MICROMINIATURE GAUGING DISPLACEMENT SENSOR

The above-identified application became abandoned for failure to file a timely and proper reply to a notice or action by the United States Patent and Trademark Office. The date of abandonment is the day after the expiration date of the period set for reply in the office notice or action plus any extensions of time actually obtained.

APPLICANT HEREBY PETITIONS FOR REVIVAL OF THIS APPLICATION

NOTE: A grantable petition requires the following items:
(1) Petition fee;
(2) Reply and/or issue fee;
(3) Terminal disclaimer with disclaimer fee – required for all utility and plant applications filed before June 8, 1995; and for all design applications;
(4) Statement that the entire delay was unintentional.

Petition fee
The petition fee under 37CFR 1.17(m) is attached.

☐ Applicant claims SMALL ENTITY status. See 37 CFR 1.27.

☐ Applicant is no longer claiming SMALL ENTITY status. See 37 CFR 1.27(g)(2).

☒ Applicant(s) status remains as SMALL ENTITY.

☐ Applicant(s) status remains as other than SMALL ENTITY.

Issue Fee and Publication Fee :

Issue Fee and Publication Fee are not due.

☒ Issue Fee Transmittal is attached

Drawing corrections and/ or other deficiencies.

- (●) Drawing corrections and/ or other deficiencies are not required
- ( ) I certify, in accordance with 37 CFR 1.4.(D)(4), that drawing corrections and/ or other deficiencies have previously been filed on
- ( ) Drawing corrections and/ or other deficiencies are attached.
- [x] STATEMENT: The entire delay in filing the required reply from the due date for the required reply until the filing of a grantable petition under 37 CFR 1.137(b) was unintentional.

THIS PORTION MUST BE COMPLETED BY THE SIGNATORY OR SIGNATORIES

I certify, in accordance with 37 CFR 1.4(d)(4) that I am:

- (●) An attorney or agent registered to practice before the Patent and Trademark Office who has been given power of attorney in this application.
- ( ) An attorney or agent registered to practice before the Patent and Trademark Office, acting in a representative capacity.
- ( ) A sole inventor
- ( ) A joint inventor; I certify that I am authorized to sign this submission on behalf of all of the inventors.
- ( ) A joint inventor; all of whom are signing this e-petition.
- ( ) The assignee of record of the entire interest that has properly made itself of record pursuant to 37 CFR 3.71.

Signature	/James Marc Leas/
Name	James Marc Leas
Registration Number	34372

UNITED STATES PATENT AND TRADEMARK OFFICE

Commissioner for Patents
United States Patent and Trademark Office
P.O. Box 1450
Alexandria, VA 22313-1450
www.uspto.gov

Decision Date : May 12,2011

In re Application of :

David Churchill

Application No : 10677578

Filed : 02-Oct-2003

Attorney Docket No : 115-007

DECISION ON PETITION

UNDER CFR 1.137(b)

This is an electronic decision on the petition under 37 CFR 1.137(b), filed May 12,2011 , to revive the above-identified application.

The petition is **GRANTED.**

The above-identified application became abandoned for failure to reply in a timely manner to the Notice of Allowance and Issue Fee(s) Due. The date of abandonment is the day after the expiration date of the period set for reply in the Notice.

The electronic petition satisfies the conditions for revival pursuant to the provisions of 37 CFR 1.137(b) in that (1) the reply in the form of payment of the Issue Fee and the Publication Fee (if necessary); (2) the petition fee as set forth in 37 CFR 1.17 (m); (3) the drawing correction and/or other deficiencies (if necessary); and (4) the required statement of unintentional delay have been received. Accordingly, the Issue Fee payment is accepted as having been unintentionally delayed.

Telephone inquiries concerning this decision should be directed to the Patent Electronic Business Center (EBC) at 866-217-9197.

This application file is being directed to the Office of Patent Publication.

Office of Petitions

Doc Code: PET.AUTO Document Description: Petition automatically granted by EFS-Web	PTO/SB/64 U.S. Patent and Trademark Office Department of Commerce

Electronic Petition Request	PETITION FOR REVIVAL OF AN APPLICATION FOR PATENT ABANDONED UNINTENTIONALLY UNDER 37 CFR 1.137(b)
Application Number	10677578
Filing Date	02-Oct-2003
First Named Inventor	David Churchill
Art Unit	2858
Examiner Name	KENNETH WHITTINGTON
Attorney Docket Number	115-007
Title	MICROMINIATURE GAUGING DISPLACEMENT SENSOR

OPAP IAP5 MAY 1 2 2011 PATENT & TRADEMARK OFFICE

The above-identified application became abandoned for failure to file a timely and proper reply to a notice or action by the United States Patent and Trademark Office. The date of abandonment is the day after the expiration date of the period set for reply in the office notice or action plus any extensions of time actually obtained.

APPLICANT HEREBY PETITIONS FOR REVIVAL OF THIS APPLICATION

NOTE: A grantable petition requires the following items:
(1) Petition fee;
(2) Reply and/or issue fee;
(3) Terminal disclaimer with disclaimer fee – required for all utility and plant applications filed before June 8, 1995; and for all design applications;
(4) Statement that the entire delay was unintentional.

Petition fee
The petition fee under 37CFR 1.17(m) is attached.

☐ Applicant claims SMALL ENTITY status. See 37 CFR 1.27.

☐ Applicant is no longer claiming SMALL ENTITY status. See 37 CFR 1.27(g)(2).

☒ Applicant(s) status remains as SMALL ENTITY.

☐ Applicant(s) status remains as other than SMALL ENTITY.

Issue Fee and Publication Fee :

Issue Fee and Publication Fee are not due.

☒ Issue Fee Transmittal is attached

Drawing corrections and/ or other deficiencies.

◉ Drawing corrections and/ or other deficiencies are not required

○ I certify, in accordance with 37 CFR 1.4.(D)(4), that drawing corrections and/ or other deficiencies have previously been filed on

○ Drawing corrections and/ or other deficiencies are attached.

☒ STATEMENT: The entire delay in filing the required reply from the due date for the required reply until the filing of a grantable petition under 37 CFR 1.137(b) was unintentional.

THIS PORTION MUST BE COMPLETED BY THE SIGNATORY OR SIGNATORIES

I certify, in accordance with 37 CFR 1.4(d)(4) that I am:

◉ An attorney or agent registered to practice before the Patent and Trademark Office who has been given power of attorney in this application.

○ An attorney or agent registered to practice before the Patent and Trademark Office, acting in a representative capacity.

○ A sole inventor

○ A joint inventor; I certify that I am authorized to sign this submission on behalf of all of the inventors.

○ A joint inventor; all of whom are signing this e-petition.

○ The assignee of record of the entire interest that has properly made itself of record pursuant to 37 CFR 3.71.

Signature	/James Marc Leas/
Name	James Marc Leas
Registration Number	34372

UNITED STATES PATENT AND TRADEMARK OFFICE

COMMISSIONER FOR PATENTS
UNITED STATES PATENT AND TRADEMARK OFFICE
P.O. BOX 1450
ALEXANDRIA, VA 22313-1450
www.uspto.gov

JAMES MARC LEAS
Law Office Of James Marc Leas
37 BUTLER DRIVE
S. BURLINGTON VT 05403

MAILED

AUG 16 2011

OFFICE OF PETITIONS

In re Application of :
Churchill, et al. :
Application No. 10/677,578 : ON PETITION
Filed: October 2, 2003 :
Attorney Docket No. 115-007 :

This is a decision on the renewed application for patent term adjustment under 37 CFR 1.705(b), filed May 12, 2011. Applicants request that the initial determination of patent term adjustment under 35 U.S.C. 154(b) be corrected from thirty-three (33) days to one thousand two hundred forty-one (1241) days.

The renewed application for patent term adjustment under 37 CFR 1.705(b) is **GRANTED to the extent indicated herein**.

The Office has updated the PAIR screen to reflect that the correct Patent Term Adjustment (PTA) determination at the time of the mailing of the Notice of Allowance is one thousand twenty-eight (1028) days. A copy of the revised PAIR screen, showing the correct determination, is enclosed.

On September 29, 2010, the Office mailed the Determination of Patent Term Adjustment under 35 U.S.C. 154(b) in the above-identified application. The Notice stated that the patent term adjustment (PTA) to date is 33 days.

Applicants assert a 1208 day period of adjustment should be entered for Office delay in mailing an Office action in response to an amendment filed October 10, 2006. The Office concurs an adjustment is warranted, but differs in the length of the period. On April 10, 2006, the Office mailed a non-final Office action. The Office action was not received by applicants. The fact that applicants did not receive it is not shown to be due to Office error. On October 10, 2006, applicants filed a petition to have the period for response re-set via a petition

under 37 CFR 1.181 and an amendment in response to the April 10, 2006 non-final Office action. It is specifically noted that the petition under 37 CFR 1.181 was filed prior to the mailing of any notice of abandonment. Thus, there was no applicant delay within the meaning of 37 CFR 1.704(c)(4). This petition was dismissed on March 3, 2007. On April 16, 2007, applicants filed a renewed petition. On May 17, 2010, the Office mailed a decision signed by the T.C. Director, granting withdrawal of the holding of abandonment and stating that the October 10, 2006 amendment is considered timely filed. Therefore, there is no Applicant delay under 37 CFR 1.704(b).

As the response was received on October 10, 2006 and is an acceptable response to the non-final Office action, the Office delay pursuant to 37 CFR 1.702(a)(2) is from 4 months/120 days after October 10, 2006, February 7, 2007, to June 3, 2010, the date of mailing of the notice of allowance, and is 1213 days. A period of adjustment of 1213 days is being entered.

However, the reply filed on October 10, 2006 contained an omission. As stated in MPEP 2732:

> 37 CFR 1.704(c)(7) establishes submission of a reply having an omission (37 CFR 1.135(c)) as a circumstance that constitutes a failure of an applicant to engage in reasonable efforts to conclude processing or examination of an application. Submitting a reply having an omission requires the Office to issue an action under 37 CFR 1.135(c) and await and process the applicant's reply to the action under 37 CFR 1.135(c) before the initial reply (as corrected) can be treated on its merits. In addition, 37 CFR 1.704(c)(7) provides that in such a case the period of adjustment set forth in 37 CFR 1.703 shall be reduced by the number of days, if any, beginning on the day after the date the reply having an omission was filed and ending on the date that the reply or other paper correcting the omission was filed. The reference to 37 CFR 1.135(c) is parenthetical because 37 CFR 1.704(c)(7) is not limited to Office actions under 37 CFR 1.135(c) but applies when the Office issues any action or notice indicating that a reply has an omission which must be corrected: e.g., (1) a decision on a petition under 37 CFR 1.47 dismissing the petition as lacking an item necessary to grant the petition; or (2) a notice indicating that the computer readable format sequence listing filed in reply to a Notice to Comply with Requirements for Patent Applications Containing Nucleotide Sequence and/or Amino Acid Sequence

Disclosures (PTO-1661) does not comply with 37 CFR 1.821 et seq.

The petition under 37 CFR 1.181 was dismissed on March 3, 2007. On April 16, 2007, applicants filed a request for reconsideration of the March 3, 2007 petition and an affidavit. On May 17, 2010, the renewed petition was granted. The October 10, 2006 Rule 181 petition contained an omission. A grantable petition under Rule 181 was not filed until April 16, 2007. Pursuant to 37 CFR 1.704(c)(7), a 188 day period of reduction is being entered for the period beginning October 11, 2006, the day after the reply containing an omission was filed, and ending on April 16, 2007, the date a grantable Rule 181 petition was filed.

A review of PTA calculations for the application reveals other instances of Applicant delay.

On July 22, 2010, after the June 3, 2010 Notice of Allowance was mailed, applicants filed a Rule 312 amendment. Pursuant to 37 CFR 1.704(c)(10), a period of reduction of 7 days is being entered for the period beginning on July 22, 2010, the date the Rule 312 amendment was filed, and ending on July 28, 2010, the date the Office mailed a response to the Rule 312 amendment.

On August 19, 2010, applicants filed a Rule 312 amendment. Pursuant to 37 CFR 1.704(c)(10), a period of reduction of 7 days is being entered for the period beginning on August 19, 2010, the date the Rule 312 amendment was filed, and ending on August 31, 2010, the date the Office mailed a response to the Rule 312 amendment.

On September 20, 2010, applicants filed a petition to withdraw from issue, a RCE, and an IDS. Pursuant to 37 CFR 1.704(c)(10), a period of reduction of 10 days is being entered for the period beginning on August 20, 2010, the date the aforementioned correspondence was filed, and ending on September 29, 2010, the date the Office mailed a Notice of Allowance, which was last piece of Office correspondence addressing the September 20, 2010 filings.

In view thereof, the correct determination of patent term adjustment at the time of the mailing of the notice of allowance is one thousand twenty-eight (1028) days. The PTA calculation formula is 1266 (53 + 1213) days Office delay - 238 (20 + 188 + 7 + 13 + 10) days Applicant delay.

The Office acknowledges receipt of the $200.00 fee set forth in 37 CFR 1.18(e). No additional fees are required.

The application is being forwarded to the Office of Data Management so that a patent can be issued. The patent term adjustment indicated on the patent (as shown on the Issue Notification mailed about three weeks prior to patent issuance) will include any additional adjustment accrued both for Office delay in issuing the patent more than four months after payment of the issue fee and satisfaction of all outstanding requirements, and for the Office taking in excess of three years to issue the patent (to the extent that the three-year period does not overlap with periods already accorded).

Telephone inquiries specific to this matter should be directed to the undersigned at (571) 272-3230.

Shirene Willis Brantley

Shirene Willis Brantley
Senior Petitions Attorney
Office of Petitions

Enclosure: Copy of Revised PAIR Screen

Patent eBusiness

- Electronic Filing
- Patent Application Information (PAIR)
- Patent Ownership
- Fees
- Supplemental Resources & Support

Patent Information

Patent Guidance and General Info
- Codes, Rules & Manuals
- Employee & Office Directories
- Resources & Public Notices

Patent Searches

Patent Official Gazette
- Search Patents & Applications
- Search Biological Sequences
- Copies, Products & Services

Other

Copyrights
Trademarks
Policy & Law
Reports

Patent Application Information Retrieval

Order Certified Application As Filed Order Certified File Wrapper View Order List

10/677,578 MICROMINIATURE GAUGING DISPLACEMENT SENSOR 115-007

Select New Case | Application Data | Transaction History | Image File Wrapper | Patent Term Adjustments | Continuity Data | Published Documents | Address & Attorney/Agent | Display References

Patent Term Adjustment

Filing or 371(c) Date:	10-02-2003	Overlapping Days Between {A and B} or {A and C}:	0
Issue Date of Patent:	-	Non-Overlapping USPTO Delays:	53
A Delays:	53	PTO Manual Adjustments:	995
B Delays:	0	Applicant Delays:	20
C Delays:	0	Total PTA Adjustments:	1028

Patent Term Adjustment History **Explanation Of Calculations**

Number	Date	Contents Description	PTO (Days)	APPL (Days)	Start
128	08-14-2011	Adjustment of PTA Calculation by PTO	995		0
106	09-29-2010	Mail Notice of Allowance			0
105	09-27-2010	Allowed Case Returned to the Examiner for Clerical Processing			0
104	09-27-2010	Issue Revision Completed			0
103	09-27-2010	Document Verification			0
102	09-27-2010	Notice of Allowance Data Verification Completed			0
101	09-27-2010	Case Docketed to Examiner in GAU			0
100	09-24-2010	Allowability Notice			0
99	09-20-2010	Information Disclosure Statement considered			0
98	09-17-2010	Petition Entered			0
96	09-20-2010	Information Disclosure Statement (IDS) Filed			0
95	09-20-2010	Request for Continued Examination (RCE)			0
94	09-21-2010	Disposal for a RCE / CPA / R129			0
93	09-20-2010	Electronic Information Disclosure Statement			0
92	09-20-2010	Mail-Record Petition Decision of Granted to Withdraw from Issue - with assigned Patent NO.			0
91	09-20-2010	Record Petition Decision of Granted to Withdraw from Issue - with assigned Patent NO.			0
90	09-20-2010	Withdrawal Patent Case from Issue			0
89	09-20-2010	Withdrawal Patent Case from Issue			0
88	09-20-2010	Petition Entered			0
87	09-20-2010	Workflow - Request for RCE - Begin			0
86	09-15-2010	Issue Notification Mailed			0
84	09-02-2010	Export to Final Data Capture			0
	09-01-				

83	2010	Dispatch to FDC	0
82	08-31-2010	Mail Response to 312 Amendment (PTO-271)	0
81	08-30-2010	Response to Amendment under Rule 312	0
80	08-19-2010	Amendment after Notice of Allowance (Rule 312)	0
79	08-23-2010	Application Is Considered Ready for Issue	0
78	08-19-2010	Issue Fee Payment Verified	0
77	08-19-2010	Issue Fee Payment Received	0
76	07-27-2010	Finished Initial Data Capture	0
75	07-28-2010	Mail Response to 312 Amendment (PTO-271)	0
74	07-22-2010	Response to Amendment under Rule 312	0
73	07-22-2010	Amendment after Notice of Allowance (Rule 312)	0
72	07-14-2010	Mail PUB other miscellaneous communication to applicant	0
71	07-14-2010	PUB Other miscellaneous communication to applicant	0
70	06-07-2010	Export to Initial Data Capture	0
69	06-03-2010	Mail Notice of Allowance	0
68	06-02-2010	Issue Revision Completed	0
67	06-02-2010	Document Verification	0
66	06-02-2010	Notice of Allowance Data Verification Completed	0
65	05-28-2010	Allowability Notice	0
64	05-28-2010	Case Docketed to Examiner in GAU	0
63	05-17-2010	Mail-Petition to Revive Application - Granted	0
62	05-14-2010	Petition to Revive Application - Granted	0
61	04-16-2007	Petition Entered	0
60	04-16-2007	Affidavit(s) (Rule 131 or 132) or Exhibit(s) Received	0
59	04-16-2007	Miscellaneous Incoming Letter	0
58	04-13-2007	Mail Abandonment for Failure to Respond to Office Action	0
57	04-11-2007	Aband. for Failure to Respond to O. A.	0
56	03-30-2007	Mail-Petition Decision - Dismissed	0
55	10-10-2006	Petition Entered	0
53	04-10-2006	Mail Non-Final Rejection	0
52	04-06-2006	Non-Final Rejection	0
51	03-16-2006	Date Forwarded to Examiner	0
50	03-13-2006	Request for Continued Examination (RCE)	0
49	03-16-2006	Disposal for a RCE / CPA / R129	0

48	03-13-2006	Workflow - Request for RCE - Begin			0
47	03-01-2006	Mail Advisory Action (PTOL - 303)			0
46	02-24-2006	Advisory Action (PTOL-303)			0
45	02-16-2006	Date Forwarded to Examiner			0
44	02-13-2006	Amendment after Final Rejection			0
43	01-19-2006	Mail Final Rejection (PTOL - 326)			0
42	01-13-2006	Final Rejection			0
41	12-22-2005	Date Forwarded to Examiner			0
40	12-19-2005	Response after Non-Final Action			0
39	10-05-2005	Mail Non-Final Rejection			0
38	09-30-2005	Non-Final Rejection			0
37	09-27-2005	Date Forwarded to Examiner			0
36	09-20-2005	Amendment after Final Rejection			0
35	06-21-2005	Mail Final Rejection (PTOL - 326)			0
34	06-17-2005	Final Rejection			0
33	05-11-2005	Date Forwarded to Examiner			0
32	05-04-2005	Response after Non-Final Action		20	29
31	04-21-2005	Mail Notice of Informal or Non-Responsive Amendment			0
30	04-21-2005	Date Forwarded to Examiner			0
29.1	04-14-2005	Informal or Non-Responsive Amendment after Examiner Action			0
29	04-14-2005	Response after Non-Final Action			0
28	01-24-2005	Mail Non-Final Rejection	53		-1
27	01-19-2005	Non-Final Rejection			0
26	11-23-2004	IFW TSS Processing by Tech Center Complete			0
25	11-23-2004	Case Docketed to Examiner in GAU			0
24	11-09-2004	Transfer Inquiry to GAU			0
23	11-05-2004	Transfer Inquiry to GAU			0
22	03-31-2004	Application Return from OIPE			0
21	04-01-2004	Application Is Now Complete			0
20	01-06-2004	Corrected Paper			0
19	03-31-2004	Pre-Exam Office Action Withdrawn			0
18	03-31-2004	Application Return TO OIPE			0
17	03-31-2004	Application Return from OIPE			0
	03-31-				

16	2004	Application Return TO OIPE	0
15	03-30-2004	Application Return from OIPE	0
14	03-31-2004	Application Is Now Complete	0
13	01-08-2004	Pre-Exam Office Action Withdrawn	0
12	03-31-2004	Pre-Exam Office Action Withdrawn	0
11	03-30-2004	Application Return TO OIPE	0
10	03-30-2004	Application Dispatched from OIPE	0
9	03-31-2004	Application Is Now Complete	0
8	03-11-2004	Additional Application Filing Fees	0
7	03-11-2004	Applicant has submitted new drawings to correct Corrected Papers problems	0
6	01-08-2004	Corrected Paper	0
4	12-17-2003	CASE CLASSIFIED BY OIPE	0
3	12-17-2003	Cleared by OIPE CSR	0
2	11-16-2003	IFW Scan & PACR Auto Security Review	0
1	10-02-2003	Initial Exam Team nn	0

If you need help:

- *Call the Patent Electronic Business Center at (866) 217-9197 (toll free) or e-mail EBC@uspto.gov for specific questions about Patent Application Information Retrieval (PAIR).*
- *Send general questions about USPTO programs to the USPTO Contact Center (UCC).*
- *If you experience technical difficulties or problems with this application, please report them via e-mail to Electronic Business Support or call 1 800-786-9199.*

You can suggest USPTO webpages or material you would like featured on this section by E-mail to the webmaster@uspto.gov. While we cannot promise to accommodate all requests, your suggestions will be considered and may lead to other improvements on the website.

PTO/SB/66 (03-09)
Approved for use through 03/31/2012. OMB 0651-0016
U.S. Patent and Trademark Office: U.S. DEPARTMENT OF COMMERCE
Under the Paperwork Reduction Act of 1995, no persons are required to respond to a collection of information unless it displays valid OMB control number.

PETITION TO ACCEPT UNINTENTIONALLY DELAYED PAYMENT OF MAINTENANCE FEE IN AN EXPIRED PATENT (37 CFR 1.378(c))

Patent Number	Issue Date (YYYY-MM-DD)	Application Number	Filing Date (YYYY-MM-DD)	Docket Number (if applicable)
7,105,043	2006-09-12	10/677,741	2003-10-03	P08071US00

CAUTION: Maintenance fee (and surcharge, if any) payment must correctly identify: (1) the patent number and (2) the application number of the actual U.S. application leading to issuance of that patent to ensure the fee(s) is/are associated with the correct patent. 37 CFR 1.366(c) and (d).

SMALL ENTITY
☒ Patentee claims, or has previously claimed, small entity status. See 37 CFR 1.27.

LOSS OF ENTITLEMENT TO SMALL ENTITY STATUS
☐ Patentee is no longer entitled to small entity status. See 37 CFR 1.27(g)

NOT Small Entity		Small Entity	
Fee	Code	Fee	Code
○ 3 ½ year	(1551)	◉ 3 ½ year	(2551)
○ 7 ½ year	(1552)	○ 7 ½ year	(2552)
○ 11 ½ year	(1553)	○ 11 ½ year	(2553)

SURCHARGE
The surcharge required by 37 CFR 1.20(i)(2) (Fee Code 1558) must be paid as a condition of accepting unintentionally delayed payment of the maintenance fee.

MAINTENANCE FEE (37 CFR 1.20(e)-(g))
The appropriate maintenance fee must be submitted with this petition.

STATEMENT
THE UNDERSIGNED CERTIFIES THAT THE DELAY IN PAYMENT OF THE MAINTENANCE FEE TO THIS PATENT WAS UNINTENTIONAL

PETITIONER(S) REQUEST THAT THE DELAYED PAYMENT OF THE MAINTENANCE FEE BE ACCEPTED AND THE PATENT REINSTATED

THIS PORTION MUST BE COMPLETED BY THE SIGNATORY OR SIGNATORIES

37 CFR 1.378(d) states: "Any petition under this section must be signed by an attorney or agent registered to practice before the Patent and Trademark Office, or by the patentee, the assignee, or other party in interest."

I certify, in accordance with 37 CFR 1.4(d)(4) that I am

◉ An attorney or agent registered to practice before the Patent and Trademark Office

○ A sole patentee

○ A joint patentee; I certify that I am authorized to sign this submission on behalf of all the other patentees.

○ A joint patentee; all of whom are signing this e-petition

○ The assignee of record of the entire interest

Under the Paperwork Reduction Act of 1995, no persons are required to respond to a collection of information unless it displays valid OMB control number.

Patent Practitioner			
A signature of the applicant or representative is required in accordance with 37 CFR 1.33 and 10.18. Please see 37 CFR 1.4(d) for the form of the signature			
Signature	/Douglas E. Jackson/	Date (YYYY-MM-DD)	2011-02-24
Name	Douglas E. Jackson	Registration Number	28518

This collection of information is required by 37 CFR 1.378(c). The information is required to obtain or retain a benefit by the public which is to file (and by the USPTO to process) an application. Confidentiality is governed by 35 U.S.C. 122 and 37 CFR 1.11 and 1.14. This collection is estimated to take 1 hour to complete, including gathering, preparing, and submitting the completed application form to the USPTO. Time will vary depending upon the individual case. Any comments on the amount of time you require to complete this form and/ or suggestions for reducing this burden, should be sent to the Chief Information Officer, U.S. Patent and Trademark Office, U.S. Department of Commerce, P.O. Box 1450, Alexandria, VA 22313-1450. DO NOT SEND FEES OR COMPLETED FORMS TO THIS ADDRESS. **This form can only be used when in conjunction with EFS-Web. If this form is mailed to the USPTO, it may cause delays in reinstating the patent.**

Privacy Act Statement

The Privacy Act of 1974 (P.L. 93-579) requires that you be given certain information in connection with your submission of the attached form related to a patent application or patent. Accordingly, pursuant to the requirements of the Act, please be advised that: (1) the general authority for the collection of this information is 35 U.S.C. 2(b)(2); (2) furnishing of the information solicited is voluntary; and (3) the principal purpose for which the information is used by the U.S. Patent and Trademark Office is to process and/or examine your submission related to a patent application or patent. If you do not furnish the requested information, the U.S. Patent and Trademark Office may not be able to process and/or examine your submission, which may result in termination of proceedings or abandonment of the application or expiration of the patent.

The information provided by you in this form will be subject to the following routine uses:

1. The information on this form will be treated confidentially to the extent allowed under the Freedom of Information Act (5 U.S.C. 552) and the Privacy Act (5 U.S.C. 552a). Records from this system of records may be disclosed to the Department of Justice to determine whether the Freedom of Information Act requires disclosure of these records.

2. A record from this system of records may be disclosed, as a routine use, in the course of presenting evidence to a court, magistrate, or administrative tribunal, including disclosures to opposing counsel in the course of settlement negotiations.

3. A record in this system of records may be disclosed, as a routine use, to a Member of Congress submitting a request involving an individual, to whom the record pertains, when the individual has requested assistance from the Member with respect to the subject matter of the record.

4. A record in this system of records may be disclosed, as a routine use, to a contractor of the Agency having need for the information in order to perform a contract. Recipients of information shall be required to comply with the requirements of the Privacy Act of 1974, as amended, pursuant to 5 U.S.C. 552a(m).

5. A record related to an International Application filed under the Patent Cooperation Treaty in this system of records may be disclosed, as a routine use, to the International Bureau of the World Intellectual Property Organization, pursuant to the Patent Cooperation Treaty.

6. A record in this system of records may be disclosed, as a routine use, to another federal agency for purposes of National Security review (35 U.S.C. 181) and for review pursuant to the Atomic Energy Act (42 U.S.C. 218(c)).

7. A record from this system of records may be disclosed, as a routine use, to the Administrator, General Services, or his/her designee, during an inspection of records conducted by GSA as part of that agency's responsibility to recommend improvements in records management practices and programs, under authority of 44 U.S.C. 2904 and 2906. Such disclosure shall be made in accordance with the GSA regulations governing inspection of records for this purpose, and any other relevant (i.e., GSA or Commerce) directive. Such disclosure shall not be used to make determinations about individuals.

8. A record from this system of records may be disclosed, as a routine use, to the public after either publication of the application pursuant to 35 U.S.C. 122(b) or issuance of a patent pursuant to 35 U.S.C. 151. Further, a record may be disclosed, subject to the limitations of 37 CFR 1.14, as a routine use, to the public if the record was filed in an application which became abandoned or in which the proceedings were terminated and which application is referenced by either a published application, an application open to public inspections or an issued patent.

9. A record from this system of records may be disclosed, as a routine use, to a Federal, State, or local law enforcement agency, if the USPTO becomes aware of a violation or potential violation of law or regulation.

UNITED STATES PATENT AND TRADEMARK OFFICE

Commissioner for Patents
United States Patent and Trademark Office
P.O. Box 1450
Alexandria, VA 22313-1450
www.uspto.gov

In re Patent No. 7105043
Issue Date: September 12,2006
Application No. 10677741
Filed: October 3,2003
Attorney Docket No. P08071US00/RFH

:
:DECISION GRANTING PETITION
:UNDER 37 CFR 1.378(c)
:

This is a decision on the electronic petition, filed February 24,2011 ,under 37 CFR 1.378(c) to accept the unintentionally delayed payment of the 3.5 year maintenance fee for the above-identified patent.

The petition is **GRANTED**.

The maintenance fee is accepted, and the above-identified patent reinstated as of February 24,2011 . This decision also constitutes notice that the fee has been accepted. An electronic copy of the petition and this decision has been created as an entry in the Image File Wrapper. Nevertheless, petitioner should print and retain an independent copy.

Telephone inquiries related to this electronic decision should be directed to the Electronic Business Center at 1-866-217-9197.

UNITED STATES PATENT AND TRADEMARK OFFICE

Commissioner for Patents
United States Patent and Trademark Office
P.O. Box 1450
Alexandria, VA 22313-1450
www.uspto.gov

EDWARD P. DUTKIEWICZ, PA
EDWARD P. DUTKIEWICZ
PO BOX 937
DADE CITY, FL 33526

MAILED
OCT 24 2011
OFFICE OF PETITIONS

In re Patent No. 7,021,014 :
Issue Date: April 4, 2006 :
Application No. 10/677,773 : ON PETITION
Filed: October 2, 2003 :
Attorney Docket No. :

This is a decision on the petition under 37 CFR 1.378(c), filed August 29, 2011, to accept the unintentionally delayed payment of a maintenance fee for the above-identified patent.

The petition is **GRANTED**.

This patent expired on April 4, 2010 for failure to pay the 3 ½ year maintenance fee. Since this petition was submitted within twenty-four months after the six-month grace period provided in 37 CFR 1.362(e), the petition was timely filed under the provisions of 37 CFR 1.378(c).

The maintenance fee is hereby accepted and the above-identified patent is reinstated as of the mail date of this decision.

Petitioner will not receive future correspondence related to maintenance fees for the patent unless a "Fee Address" Indication Form (see PTO/SB/47) and Request for Customer Number (see PTO/SB/125) are submitted.

Telephone inquiries concerning this decision should be directed to undersigned at (571) 272-1642.

/AMW/
April M. Wise
Petitions Examiner
Office of Petitions

cc: MICHAEL J. COLTIZ, JR
640 DOUGLAS AVENUE
DUNEDIN, FL 34698

UNITED STATES PATENT AND TRADEMARK OFFICE

Commissioner for Patents
United States Patent and Trademark Office
P.O. Box 1450
Alexandria, VA 22313-1450
www.uspto.gov

BUCHANAN, INGERSOLL & ROONEY PC
POST OFFICE BOX 1404
ALEXANDRIA VA 22313-1404

MAILED
OCT 06 2010
OFFICE OF PETITIONS

In re Application of	:	
CRIERE et al.	:	
Application No. 10/677,861	:	DECISION ON PETITIONS
Filed: 10/03/2003	:	UNDER 37 CFR 1.78(a)(3)
Attorney Docket No. 1017751-000039	:	AND 37 CFR 1.55(c)

This is a decision on the renewed petitions under 37 CFR 1.78(a)(3) and 37 CFR 1.55(c), filed July 22, 2010, to accept an unintentionally delayed claim under 35 U.S.C. §§ 120 and 365(c) for the benefit of priority to prior-filed nonprovisional and PCT applications, and under 35 U.S.C. § 119(a)-(d) for the benefit of a prior-filed foreign application, as set forth in the concurrently filed Application Data Sheet.

As to the benefit claim under 37 CFR 1.78(a)(3):

A petition for acceptance of a claim for late priority under 37 CFR 1.78(a)(3) is only applicable to those applications filed on or after November 29, 2000 and after the expiration of the period specified in 37 CFR 1.78(a)(2)(ii). In addition, the petition under 37 CFR 1.78(a)(3) must be accompanied by:

(1) the reference required by 35 U.S.C. § 120 and 37 CFR 1.78(a)(2)(i) of the prior-filed application, unless previously submitted;
(2) the surcharge set forth in § 1.17(t); and
(3) a statement that the entire delay between the date the claim was due under 37 CFR 1.78(a)(2)(ii) and the date the claim was filed was unintentional. The Director may require additional information where there is a question whether the delay was unintentional.

All of the requirements being met, the petition to accept an unintentionally delayed claim for priority under 35 U.S.C. §§ 120 and 365(c) is **GRANTED.**

As to the benefit claim under 37 CFR 1.55(c):

A petition under 37 CFR 1.55(c) to accept an unintentionally delayed claim for priority requires:

(1) The nonprovisional application claiming the benefit of an earlier filing date must be filed on or after November 29, 2000;
(2) the claim submitted with the petition must identify the prior foreign application for which priority is claimed, as well as any foreign application for the same subject matter and having a filing date before that of the application for which priority is claimed, by the application number, country, and the filing date, and be included either in an oath or declaration (37 CFR 1.63(c)(2)) or in an Application Data Sheet (37 CFR 1.76(b)(6);
(3) the surcharge as set forth in 37 CFR 1.17(t);
(4) a statement that the entire delay between the date the claim was due under 37 CFR 1.55(a)(1) and the date the claim was filed was unintentional (the Director may require additional information where there is a question whether the delay was unintentional); and
(5) the nonprovisional application must be filed within 12 months of the filing date of the foreign application.

All of the requirements being met, the petition under 37 CFR 1.55(c) to accept an unintentionally delayed claim for benefit of priority under 35 U.S.C. § 119(a)-(d) to the prior-filed foreign application is **GRANTED**.

The granting of the petition to accept the delayed benefit claim to the prior-filed applications under 37 CFR 1.78(a)(3) and 37 CFR 1.55(c) should not be construed as meaning that this application is entitled to the benefit of the prior-filed applications. In order for this application to be entitled to the benefit of the prior-filed applications, all other requirements under 35 U.S.C. §§ 120 and 365(c) and 37 CFR 1.78(a)(1) and (a)(2) and 35 § U.S.C. 119(a)-(d) and 37 CFR 1.55(a)(1) must be met. Similarly, the fact that the corrected Filing Receipt accompanying this decision on petition includes the prior-filed applications should not be construed as meaning that applicant is entitled to the claim for benefit of priority to the prior-filed applications noted thereon. Accordingly, the examiner will, in due course, consider this benefit claim and determine whether this application is entitled to the benefit of the earlier filing date.

A corrected Filing Receipt, which includes the priority claim to the prior-filed applications, accompanies this decision on petition.

Any inquiries concerning this decision may be directed to the undersigned at (571) 272-3211. All other inquiries concerning either the examination procedures or status of the application should be directed to the Technology Center.

This application is being to referred Technology Center Art Unit 1628 for consideration by the examiner of applicant's entitlement to claim benefit of priority under 35 U.S.C. §§ 120, 365(c) and 35 U.S.C. § 119(a)-(d) to the prior-filed applications.

C. T. Donnell

Christina Tartera Donnell
Senior Petitions Attorney
Office of Petitions

ATTACHMENT: Corrected Filing Receipt

UNITED STATES PATENT AND TRADEMARK OFFICE

UNITED STATES DEPARTMENT OF COMMERCE
United States Patent and Trademark Office
Address: COMMISSIONER FOR PATENTS
P.O. Box 1450
Alexandria, Virginia 22313-1450
www.uspto.gov

APPLICATION NUMBER	FILING or 371(c) DATE	GRP ART UNIT	FIL FEE REC'D	ATTY.DOCKET.NO	TOT CLAIMS	IND CLAIMS
10/677,861	10/03/2003	1628	1350	1017751-000039	45	3

CONFIRMATION NO. 4606

CORRECTED FILING RECEIPT

21839
BUCHANAN, INGERSOLL & ROONEY PC
POST OFFICE BOX 1404
ALEXANDRIA, VA 22313-1404

OC000000043858049

Date Mailed: 10/06/2010

Receipt is acknowledged of this non-provisional patent application. The application will be taken up for examination in due course. Applicant will be notified as to the results of the examination. Any correspondence concerning the application must include the following identification information: the U.S. APPLICATION NUMBER, FILING DATE, NAME OF APPLICANT, and TITLE OF INVENTION. Fees transmitted by check or draft are subject to collection. Please verify the accuracy of the data presented on this receipt. **If an error is noted on this Filing Receipt, please submit a written request for a Filing Receipt Correction. Please provide a copy of this Filing Receipt with the changes noted thereon. If you received a "Notice to File Missing Parts" for this application, please submit any corrections to this Filing Receipt with your reply to the Notice. When the USPTO processes the reply to the Notice, the USPTO will generate another Filing Receipt incorporating the requested corrections**

Applicant(s)

Bruno Criere, Gravigny, FRANCE;
Pascal Suplie, Montaure, FRANCE;
Philippe Chenevier, Montreal, CANADA;
Pascal Oury, Le Chesnay, FRANCE;
Keith S. Rotenberg, Denville, NJ;
George Bobotas, Tarpon Springs, FL;

Power of Attorney: The patent practitioners associated with Customer Number 21839

Domestic Priority data as claimed by applicant

This application is a CIP of 10/030,262 04/17/2002 PAT 7,101,574
which is a 371 of PCT/FR00/01971 07/07/2000

Foreign Applications

FRANCE 99/08,923 07/09/1999

If Required, Foreign Filing License Granted: 12/12/2003

The country code and number of your priority application, to be used for filing abroad under the Paris Convention, is **US 10/677,861**

Projected Publication Date: Not Applicable

Non-Publication Request: No

Early Publication Request: No

Title

PHARMACEUTICAL COMPOSITION CONTAINING FENOFIBRATE AND METHOD FOR THE PREPARATION THEREOF

Preliminary Class

424

PROTECTING YOUR INVENTION OUTSIDE THE UNITED STATES

Since the rights granted by a U.S. patent extend only throughout the territory of the United States and have no effect in a foreign country, an inventor who wishes patent protection in another country must apply for a patent in a specific country or in regional patent offices. Applicants may wish to consider the filing of an international application under the Patent Cooperation Treaty (PCT). An international (PCT) application generally has the same effect as a regular national patent application in each PCT-member country. The PCT process **simplifies** the filing of patent applications on the same invention in member countries, but **does not result** in a grant of "an international patent" and does not eliminate the need of applicants to file additional documents and fees in countries where patent protection is desired.

Almost every country has its own patent law, and a person desiring a patent in a particular country must make an application for patent in that country in accordance with its particular laws. Since the laws of many countries differ in various respects from the patent law of the United States, applicants are advised to seek guidance from specific foreign countries to ensure that patent rights are not lost prematurely.

Applicants also are advised that in the case of inventions made in the United States, the Director of the USPTO must issue a license before applicants can apply for a patent in a foreign country. The filing of a U.S. patent application serves as a request for a foreign filing license. The application's filing receipt contains further information and guidance as to the status of applicant's license for foreign filing.

Applicants may wish to consult the USPTO booklet, "General Information Concerning Patents" (specifically, the section entitled "Treaties and Foreign Patents") for more information on timeframes and deadlines for filing foreign patent applications. The guide is available either by contacting the USPTO Contact Center at 800-786-9199, or it can be viewed on the USPTO website at http://www.uspto.gov/web/offices/pac/doc/general/index.html.

For information on preventing theft of your intellectual property (patents, trademarks and copyrights), you may wish to consult the U.S. Government website, http://www.stopfakes.gov. Part of a Department of Commerce initiative, this website includes self-help "toolkits" giving innovators guidance on how to protect intellectual property in specific countries such as China, Korea and Mexico. For questions regarding patent enforcement issues, applicants may call the U.S. Government hotline at 1-866-999-HALT (1-866-999-4158).

LICENSE FOR FOREIGN FILING UNDER

Title 35, United States Code, Section 184

Title 37, Code of Federal Regulations, 5.11 & 5.15

GRANTED

The applicant has been granted a license under 35 U.S.C. 184, if the phrase "IF REQUIRED, FOREIGN FILING LICENSE GRANTED" followed by a date appears on this form. Such licenses are issued in all applications where

the conditions for issuance of a license have been met, regardless of whether or not a license may be required as set forth in 37 CFR 5.15. The scope and limitations of this license are set forth in 37 CFR 5.15(a) unless an earlier license has been issued under 37 CFR 5.15(b). The license is subject to revocation upon written notification. The date indicated is the effective date of the license, unless an earlier license of similar scope has been granted under 37 CFR 5.13 or 5.14.

This license is to be retained by the licensee and may be used at any time on or after the effective date thereof unless it is revoked. This license is automatically transferred to any related applications(s) filed under 37 CFR 1.53(d). This license is not retroactive.

The grant of a license does not in any way lessen the responsibility of a licensee for the security of the subject matter as imposed by any Government contract or the provisions of existing laws relating to espionage and the national security or the export of technical data. Licensees should apprise themselves of current regulations especially with respect to certain countries, of other agencies, particularly the Office of Defense Trade Controls, Department of State (with respect to Arms, Munitions and Implements of War (22 CFR 121-128)); the Bureau of Industry and Security, Department of Commerce (15 CFR parts 730-774); the Office of Foreign AssetsControl, Department of Treasury (31 CFR Parts 500+) and the Department of Energy.

NOT GRANTED

No license under 35 U.S.C. 184 has been granted at this time, if the phrase "IF REQUIRED, FOREIGN FILING LICENSE GRANTED" DOES NOT appear on this form. Applicant may still petition for a license under 37 CFR 5.12, if a license is desired before the expiration of 6 months from the filing date of the application. If 6 months has lapsed from the filing date of this application and the licensee has not received any indication of a secrecy order under 35 U.S.C. 181, the licensee may foreign file the application pursuant to 37 CFR 5.15(b).

UNITED STATES PATENT AND TRADEMARK OFFICE

UNITED STATES DEPARTMENT OF COMMERCE
United States Patent and Trademark Office
Address: COMMISSIONER FOR PATENTS
P.O. Box 1450
Alexandria, Virginia 22313-1450
www.uspto.gov

APPLICATION NO.	FILING DATE	FIRST NAMED INVENTOR	ATTORNEY DOCKET NO.	CONFIRMATION NO.
10/677,977	10/02/2003	Jack Nguyen	3800003.00007 / 4905	9061

77202 7590 02/09/2011
K&L Gates LLP
3580 Carmel Mountain Road
Suite 200
San Diego, CA 92130

EXAMINER
WESSENDORF, TERESA D

ART UNIT	PAPER NUMBER
1639	

MAIL DATE	DELIVERY MODE
02/09/2011	PAPER

Please find below and/or attached an Office communication concerning this application or proceeding.

The time period for reply, if any, is set in the attached communication.

UNITED STATES PATENT AND TRADEMARK OFFICE

Commissioner for Patents
United States Patent and Trademark Office
P.O. Box 1450
Alexandria, VA 22313-1450
www.uspto.gov

FEB 0 9 2011

K&L Gates LLP
3580 Carmel Mountain Road
Suite 200
San Diego CA 92130

In re Application of:
Nguyen et al.
Serial No.: 10/677,977
Filed: October 2, 2003
Attorney Docket No: **3800003.00007 / 4905**

: PETITION DECISION

This is in response to the petition filed on January 13, 2011 under 3 7 CFR 1.181 to correct the misclassification of submitted Information Disclosure Statements. Specifically, applicants request correction of the classification in PAIR of the Information Disclosure Statements submitted on November 16, 2007; August 7, 2008; September 12, 2008; June 11, 2009; July 10, 2009; October 1, 2009; March 31, 2010; and July 20, 2010 in connection with the above-referenced application and consideration by the Examiner of the documents and information contained therein.

Applicants argue the "Information Disclosure Statements were submitted in connection with the above-captioned application on November 16, 2007; August 7, 2008; September 12, 2008; June 11, 2009; July 10, 2009; October 1, 2009; March 31, 2010; and July 20, 2010. Each Information Disclosure Statement was prepared in accordance with 37 C.F.R 1.97 and 1.98. As required under 37 C.F.R 1.98, each Information Disclosure Statement contained 1) a list of all patents, publications, applications, or other information submitted for consideration by the Office, including a column that provides a space next to each document to be considered, for the examiner's initials and a heading that clearly indicates that the list is an Information Disclosure Statement; and 2) legible copies of all items listed. The items either were in English or a translation was provided. A copy of the misclassified Information Disclosure Statements filed on November 16, 2007; August 7, 2008; September 12, 2008; June 11, 2009; July 10, 2009; October 1, 2009; March 31, 2010; and July 20, 2010 is attached.

The submitted Information Disclosure Statement included a tabular Form PTO-1449, which was classified as an "IDS," and a written disclosure of information. In each instance, the written disclosure of information was misclassified in PAIR as a "Transmittal Letter" (November 16, 2007, "Transmittal Letter" of 3 pages; August 7, 2008, "Transmittal Letter" of 4 pages; September 12, 2008, "Transmittal Letter" of 7 pages; June 11, 2009, "Transmittal Letter" of 3

pages; July 10, 2009, "Transmittal Letter" of 4 pages; October 1, 2009, "Transmittal Letter" of 5 pages; March 31, 2010, "Transmittal Letter" of 3 pages; and July 20, 2010, "Transmittal Letter" of 2 pages). Consequently the information contained therein may not be considered or reviewed by the Examiner."

Applicants' argument has been accorded careful consideration and is persuasive. PAIR will be corrected to reflect the misclassification of the submitted Information Disclosure Statements of November 16, 2007; August 7, 2008; September 12, 2008; June 11, 2009; July 10, 2009; October 1, 2009; March 31, 2010; and July 20, 2010.

DECISION

The petition is **GRANTED.**

Should there be any questions about this decision please contact Marianne C. Seidel, by letter addressed to Director, TC 1600, at the address listed above, or by telephone at 571-272-0584 or by facsimile sent to the general Office facsimile number, 571-273-8300.

/MC Seidel/
Marianne C. Seidel, Quality Assurance Specialist
Technology Center 1600

UNITED STATES PATENT AND TRADEMARK OFFICE

Commissioner for Patents
United States Patent and Trademark Office
P.O. Box 1450
Alexandria, VA 22313-1450
www.uspto.gov

WARD & OLIVO
Suite 300
382 Springfield Avenue
Summit, NJ 07901

MAILED

FEB 04 2011

OFFICE OF PETITIONS

In re Application of
Diane Nerby
Application No. 10/678,048
Filed: October 2, 2003
Attorney Docket No. 927-001

ON PETITION

This is a decision on the petition under 37 CFR 1.137(b), filed November 23, 2010, to revive the above-identified application.

The instant petition is not signed by an attorney of record. However, in accordance with 37 CFR 1.34(a), the signature of John W. Olivo, Jr. appearing on the petition shall constitute a representation to the United States Patent and Trademark Office that he is authorized to represent the particular party on whose behalf he acts.

The application became abandoned for failure to file a reply to the Notice of Non-Compliant Amendment (37 CFR 1.121) mailed on April 16, 2010. A Notice of Abandonment was mailed on November 9, 2010.

The petition satisfies the requirements of 37 CFR 1.137(b) in that petitioner has supplied (1) the reply in the form of an amendment; (2) the petition fee of $810; and (3) a proper statement of unintentional delay. Therefore, the petition is **GRANTED**.

This application file is being referred to Technology Center Art Unit 3624 for review of the amendment filed with the present petition.

Telephone inquiries concerning this decision should be directed to the undersigned at (571) 272-3226.

Andrea Smith
Petitions Examiner
Office of Petitions

UNITED STATES PATENT AND TRADEMARK OFFICE

UNITED STATES DEPARTMENT OF COMMERCE
United States Patent and Trademark Office
Address: COMMISSIONER FOR PATENTS
P.O. Box 1450
Alexandria, Virginia 22313-1450
www.uspto.gov

APPLICATION NO.	FILING DATE	FIRST NAMED INVENTOR	ATTORNEY DOCKET NO.	CONFIRMATION NO.
10/678,402	10/03/2003	Keith Alan Miesel	009.6001 (P-11290.00)	1006

29906 7590 08/02/2010
INGRASSIA FISHER & LORENZ, P.C.
7010 E. COCHISE ROAD
SCOTTSDALE, AZ 85253

EXAMINER
ALTER MORSCHAUSER, ALYSSA MARGO

ART UNIT	PAPER NUMBER
3762	

NOTIFICATION DATE	DELIVERY MODE
08/02/2010	ELECTRONIC

Please find below and/or attached an Office communication concerning this application or proceeding.

The time period for reply, if any, is set in the attached communication.

Notice of the Office communication was sent electronically on above-indicated "Notification Date" to the following e-mail address(es):

docketing@ifllaw.com

UNITED STATES PATENT AND TRADEMARK OFFICE

Commissioner for Patents
United States Patent and Trademark Office
P.O. Box 1450
Alexandria, VA 22313-1450
www.uspto.gov

INGRASSIA FISHER & LORENZ, P.C.
7010 E. COCHISE ROAD
SCOTTSDALE AZ 85253

In re Application of: MIESEL, KEITH ALAN et al	:
Appl. No.: 10/678402	: DECISION ON PETITION
Filed: October 3, 2003	: Under 37 CFR 1.59
For: SYSTEM, APPARATUS AND METHOD FOR INTERACTING WITH A TARGETED TISSUE OF A PATIENT	

This is a response to the petition under 37 CFR 1.59(b), filed on July 23, 2010 by which petitioners request to expunge information from the above identified application.

The decision on the petition is will be held in abeyance until prosecution on the merits is closed, at which time the petition will be decided.

Petitioner requests that the Information submitted consisting a sealed envelope containing proprietary information on July 23, 2010 should be expunged from the record. Petitioner states that either (A) that the information contains trade secret material, proprietary material and/or material that is subject to a protective order which has not been made public; or (B) that the information submitted was unintentionally submitted and the failure to obtain its return would cause irreparable harm to the party who submitted the information or to the party in interest on whose behalf the information was submitted, and the information has not otherwise been made public. The petition fee set forth in 37 CFR 1.17(g) has been paid.

The decision on the petition is held in abeyance because prosecution on the merits is not closed. Accordingly, it is not appropriate to make a final determination of whether or not the material requested to be expunged is "material", with "materiality" being defined as any information which the examiner considers as being important to a determination of patentability of the claims. Thus, the decision on the petition to expunge must be held in abeyance at this time.

During prosecution on the merits, the examiner will determine whether or not the identified document is considered to be "material". If the information is not considered by the examiner to be material, the information will be returned to the applicant. The document in question will not be available to the public during prosecution.

Donald T. Hajec, Director
Technology Center 3700

UNITED STATES PATENT AND TRADEMARK OFFICE

Commissioner for Patents
United States Patent and Trademark Office
P.O. Box 1450
Alexandria, VA 22313-1450
www.uspto.gov

MEDTRONIC, INC.
710 MEDTRONIC PARKWAY NE
MINNEAPOLIS MN 55432-9924

MAILED
JAN 04 2011
OFFICE OF PETITIONS

In re Application of

Miesel, et al.

Application No. 10/678,402

Filed: October 3, 2003

Attorney Docket No. **009.6001 (P-11290.00)**

DECISION ON PETITION

This is a decision on the petition to withdraw the holding of abandonment under 37 CFR 1.181(a), filed November 25, 2010.

The petition is **dismissed**.

This application was held abandoned January 31, 2010, after no reply was received to the non-final Office action mailed October 30, 2009. The notice set forth a shortened statutory period of reply of three months from its mailing date. No response was received within the allowable period and the application became abandoned on January 31, 2010. A Notice of Abandonment was mailed May 28, 2010. The instant petition was filed on November 25, 2010. Petitioner maintains that the notice of October 30, 2009, was never received.

When, as in this case petitioner is arguing that an Office communication was not received, petitioner must establish non-receipt of the Office communication in accordance with section 711.03(c) of the *Manual of Patent Examining Procedure* that requires the following:

> To minimize costs and burdens to practitioners and the Office, the Office has modified the showing required to establish nonreceipt of an Office action. The showing required to establish nonreceipt of an Office communication must include a statement from the practitioner describing the system used for recording an Office action received at the correspondence address of record with the USPTO. The statement should establish that the docketing system is sufficiently reliable. It is expected that the record would include, but not be limited to, the application number, attorney docket number, the mail date of the Office action and the due date for the response.
>
> Practitioner must state that the Office action was not received at the correspondence address of record, and that a search of the practitioner's record(s), including any file jacket or the equivalent, and the application contents, indicates that the Office action was not received. A copy of the record(s) used by the practitioner where the non-received Office action would have been entered had it been received is required.

> A copy of the practitioner's record(s) required to show non-receipt of the Office action should include the master docket for the firm. That is, if a three month period for reply was set in the nonreceived Office action, a copy of the master docket report showing all replies docketed for a date three months from the mail date of the nonreceived Office action must be submitted as documentary proof of nonreceipt of the Office action. If no such master docket exists, the practitioner should so state and provide other evidence such as, but not limited to, the following: the application file jacket; incoming mail log; calendar; reminder system; or the individual docket record for the application in question.

Petitioner has not made the evidentiary showing specified above. Although petitioner states otherwise, the record does not demonstrate that petitioner provided a copy of the master docket for the firm for a date three months from the mail date of the non-received Office action. If a master docket does not exists, petitioner is required to state this in the renewed petition and provide any other corroborative evidence that petitioner may have to substantiate the claim that the non-final Office was not received.

Alternatively, petitioner may revive the application based on unintentional abandonment under 37 CFR 1.137(b). A grantable petition pursuant to 37 CFR 1.137(b) must be accompanied by the required reply, the required petition fee ($1,620.00 for a large entity and $810.00 for a verified small entity), and a statement that the **entire** delay in filing the required reply from the due date for the reply until the filing of a grantable petition pursuant to 37 CFR 1.137(b) was unintentional.

Further correspondence with respect to this matter should be addressed as follows:

By mail: Commissioner for Patents
United States Patent and Trademark Office
Box 1450
Alexandria, VA 22313-1450

By facsimile: (571) 273-8300
Attn: Office of Petitions

Telephone inquiries concerning this decision should be directed to the undersigned (571) 272-3222.

/Kenya A. McLaughlin/

Kenya A. McLaughlin
Petitions Attorney
Office of Petitions

UNITED STATES PATENT AND TRADEMARK OFFICE

Commissioner for Patents
United States Patent and Trademark Office
P.O. Box 1450
Alexandria, VA 22313-1450
www.uspto.gov

MEDTRONIC, INC.
710 MEDTRONIC PARKWAY NE
MINNEAPOLIS MN 55432-9924

MAILED

FEB 15 2011

OFFICE OF PETITIONS

In re Application of

Miesel, et al.

Application No. 10/678,402

Filed: October 3, 2003

Attorney Docket No. **009.6001 (P-11290.00)**

DECISION ON PETITION

This is a decision on the petition to withdraw the holding of abandonment under 37 CFR 1.181(a), filed November 25, 2010.

The decision mailed January 4, 2011, is **vacated**[1].

The petition is **granted**.

This application was held abandoned January 31, 2010, after no reply was received to the non-final Office action mailed October 30, 2009. The notice set forth a shortened statutory period of reply of three months from its mailing date. No response was received within the allowable period and the application became abandoned on January 31, 2010. A Notice of Abandonment was mailed May 28, 2010. The instant petition was filed on November 25, 2010. Petitioner maintains that the notice of October 30, 2009, was never received.

When, as in this case petitioner is arguing that an Office communication was not received, petitioner must establish non-receipt of the Office communication in accordance with section 711.03(c) of the *Manual of Patent Examining Procedure* that requires the following:

> To minimize costs and burdens to practitioners and the Office, the Office has modified the showing required to establish nonreceipt of an Office action. The showing required to establish nonreceipt of an Office communication must include a statement from the practitioner describing the system used for recording an Office action received at the correspondence address of record with the USPTO. The statement should

[1] The undersigned was able to access the ARTIFACT document filed July 23, 2010. Consequently, the petition filed November 25, 2010, is grantable in view of the contents of the ARTIFACT.

establish that the docketing system is sufficiently reliable. It is expected that the record would include, but not be limited to, the application number, attorney docket number, the mail date of the Office action and the due date for the response.

Practitioner must state that the Office action was not received at the correspondence address of record, and that a search of the practitioner's record(s), including any file jacket or the equivalent, and the application contents, indicates that the Office action was not received. A copy of the record(s) used by the practitioner where the non-received Office action would have been entered had it been received is required. A copy of the practitioner's record(s) required to show non-receipt of the Office action should include the master docket for the firm. That is, if a three month period for reply was set in the nonreceived Office action, a copy of the master docket report showing all replies docketed for a date three months from the mail date of the nonreceived Office action must be submitted as documentary proof of nonreceipt of the Office action. If no such master docket exists, the practitioner should so state and provide other evidence such as, but not limited to, the following: the application file jacket; incoming mail log; calendar; reminder system; or the individual docket record for the application in question.

Petitioner has met the burden of proof as established by Section 711.03(c)(II) of the MPEP. The holding of abandonment is, therefore, withdrawn.

The application file is being forwarded to the Technology Center GAU 3762 for further processing that will include re-mailing the non-final Office action and resetting of the period for reply.

Questions concerning this decision should be directed to the undersigned at (571) 272-3222.

/Kenya A. McLaughlin/

Kenya A. McLaughlin
Petitions Attorney
Office of Petitions

UNITED STATES PATENT AND TRADEMARK OFFICE

Commissioner for Patents
United States Patent and Trademark Office
P.O. Box 1450
Alexandria, VA 22313-1450
www.uspto.gov

MAILED

AUG 0 4 2010

OFFICE OF PETITIONS

DIGIMARC CORPORATION
9405 SW GEMINI DRIVE
BEAVERTON OR 97008

In re Patent No. 7,656,565	: DECISION ON REQUEST FOR
Rhoads	: RECONSIDERATION OF
Issue Date: February 2, 2010	: PATENT TERM ADJUSTMENT
Application No. 10/678,584	: AND
Filed: October 3, 2003	: NOTICE OF INTENT TO ISSUE
Attorney Docket No. EWG-065-C2	: CERTIFICATE OF CORRECTION

This is a decision on the petition filed on January 20, 2010, which is being treated as a petition under 37 CFR 1.705(d) requesting that the patent term adjustment indicated on the above-identified patent be corrected to indicate that the term of the above-identified patent is extended or adjusted by one thousand seven hundred ninety-two (1792) days.

The petition to correct the patent term adjustment indicated on the above-identified patent to indicate that the term of the above-identified patent is extended or adjusted by one thousand seven hundred ninety-two (1792) days.

The Office acknowledges submission of the $200.00 fee set forth in 37 CFR 1.18(e). No additional fees are required.

The application is being forwarded to the Certificates of Correction Branch for issuance of a certificate of correction. The Office will issue a certificate of correction indicating that the term of the above-identified patent is extended or adjusted by **one thousand seven hundred ninety-two (1792) days.**

Telephone inquiries specific to this matter should be directed to the undersigned at (571) 272-3211.

Christina Tartera Donnell

Christina Tartera Donnell
Senior Petitions Attorney
Office of Petitions

Enclosure: Copy of DRAFT Certificate of Correction

UNITED STATES PATENT AND TRADEMARK OFFICE

CERTIFICATE OF CORRECTION

PATENT : 7,656,565 B2

DATED : Feb. 2, 2010 **DRAFT**

INVENTOR(S) : Rhoads

It is certified that error appears in the above-identified patent and that said Letters Patent is hereby corrected as shown below:

On the cover page,

[*] Notice: Subject to any disclaimer, the term of this patent is extended or adjusted under 35 USC 154(b) by 1139 days

Delete the phrase "by 1139 days" and insert – by 1792 days--

PALM INTRANET

Day : Tuesday
Date: 8/3/2010
Time: 13:26:16

PTA Calculations for Application: 10/678584			
Application Filing Date:	10/03/2003	PTO Delay (PTO):	1234
Issue Date of Patent:	02/02/2010	Three Years:	0
Pre-Issue Petitions:	0	Applicant Delay (APPL):	95
Post-Issue Petitions:	0	Total PTA (days):	1792
PTO Delay Adjustment:	653		

File Contents History

Number	Date	Contents Description	PTO	APPL	START
63	08/03/2010	ADJUSTMENT OF PTA CALCULATION BY PTO	653		
59.5	01/13/2010	PTA 36 MONTHS			
59	02/02/2010	PATENT ISSUE DATE USED IN PTA CALCULATION			
58	12/30/2009	EXPORT TO FINAL DATA CAPTURE			
57	12/29/2009	DISPATCH TO FDC			
56	12/16/2009	RESPONSE TO REASONS FOR ALLOWANCE			
55	12/22/2009	APPLICATION IS CONSIDERED READY FOR ISSUE			
54	12/16/2009	ISSUE FEE PAYMENT VERIFIED			
53	12/16/2009	ISSUE FEE PAYMENT RECEIVED			
52	10/20/2009	FINISHED INITIAL DATA CAPTURE			
51	09/25/2009	EXPORT TO INITIAL DATA CAPTURE			
50	09/23/2009	MAIL NOTICE OF ALLOWANCE	10		36
49	09/22/2009	ISSUE REVISION COMPLETED			
48	06/24/2009	NOTICE OF ALLOWANCE DATA VERIFICATION COMPLETED			
47	06/24/2009	ALLOWED CASE RETURNED TO THE EXAMINER FOR CLERICAL PROCESSING			
46	06/24/2009	DOCUMENT VERIFICATION			
45	06/22/2009	NOTICE OF ALLOWABILITY			
39	06/19/2009	PARALEGAL TD ACCEPTED			
38	05/13/2009	TERMINAL DISCLAIMER FILED		0	36
37	06/02/2009	DATE FORWARDED TO EXAMINER			
36	05/13/2009	RESPONSE AFTER NON-FINAL ACTION		50	34
35	05/13/2009	REQUEST FOR EXTENSION OF TIME - GRANTED			
34	12/24/2008	MAIL NON-FINAL REJECTION	6		26

33	12/22/2008	NON-FINAL REJECTION			
32	08/18/2008	INFORMATION DISCLOSURE STATEMENT CONSIDERED			
31	10/15/2008	PARALEGAL TD ACCEPTED			
30	08/18/2008	TERMINAL DISCLAIMER FILED		0	26
29	08/18/2008	REFERENCE CAPTURE ON IDS			
28	08/18/2008	INFORMATION DISCLOSURE STATEMENT (IDS) FILED			
27	10/10/2008	DATE FORWARDED TO EXAMINER			
26	08/18/2008	RESPONSE AFTER NON-FINAL ACTION		45	23
25	08/18/2008	REQUEST FOR EXTENSION OF TIME - GRANTED			
24	08/18/2008	INFORMATION DISCLOSURE STATEMENT (IDS) FILED			
23	04/04/2008	MAIL NON-FINAL REJECTION	1218		-1
22	03/31/2008	NON-FINAL REJECTION			
21	05/17/2004	INFORMATION DISCLOSURE STATEMENT CONSIDERED			
20	08/03/2006	IFW TSS PROCESSING BY TECH CENTER COMPLETE			
19	05/17/2004	REFERENCE CAPTURE ON IDS			
18.7	05/17/2004	INFORMATION DISCLOSURE STATEMENT (IDS) FILED			
18	05/17/2004	INFORMATION DISCLOSURE STATEMENT (IDS) FILED			
17	07/14/2006	CASE DOCKETED TO EXAMINER IN GAU			
16	03/31/2004	APPLICATION RETURN FROM OIPE			
15	03/31/2004	APPLICATION RETURN TO OIPE			
14	03/31/2004	APPLICATION RETURN FROM OIPE			
13	03/31/2004	APPLICATION IS NOW COMPLETE			
12	03/08/2004	ADDITIONAL APPLICATION FILING FEES			
11	03/08/2004	SMALL ENTITY STATEMENT (37 CFR 1.27)			
10	03/08/2004	A STATEMENT BY ONE OR MORE INVENTORS SATISFYING THE REQUIREMENT UNDER 35 USC 115, OATH OF THE APPLIC			
9	12/31/2003	NOTICE MAILED--APPLICATION INCOMPLETE--FILING DATE ASSIGNED			
8	12/31/2003	PRE-EXAM OFFICE ACTION WITHDRAWN			
7	12/30/2003	APPLICATION RETURN TO OIPE			
6	12/30/2003	APPLICATION DISPATCHED FROM OIPE			

5	12/30/2003	APPLICATION IS NOW COMPLETE			
4	12/17/2003	CASE CLASSIFIED BY OIPE			
3	12/17/2003	CLEARED BY OIPE CSR			
2	10/31/2003	IFW SCAN & PACR AUTO SECURITY REVIEW			
1	10/03/2003	INITIAL EXAM TEAM NN			

Search Another: Application# Search

EXPLANATION OF PTA CALCULATION

EXPLANATION OF PTE CALCULATION

To go back, right click here and select Back. To go forward, right click here and select Forward. To refresh, right click here and select Refresh.

Back to OASIS | Home page

UNITED STATES PATENT AND TRADEMARK OFFICE

Commissioner for Patents
United States Patent and Trademark Office
P.O. Box 1450
Alexandria, VA 22313-1450
www.uspto.gov

JONES DAY
222 EAST 41ST ST
NEW YORK NY 10017

MAILED
FEB 09 2011
OFFICE OF PETITIONS

In re Application of	:	
Freeman, et al.	:	
Application No. 10/678,651	:	ON PETITION
Filed: October 6, 2003	:	
Attorney Docket No. 8118.004.USDV	:	

This is in response to the renewed petition to revive an unintentionally abandoned application under 37 CFR 1.137(b), filed December 20, 2010.

The petition under 37 CFR 1.137(b) is **DISMISSED**.

Any request for reconsideration of this decision must be submitted within TWO (2) MONTHS from the mail date of this decision. Extensions of time under 37 CFR 1.136(a) are permitted. The reconsideration request should include a cover letter entitled "Renewed Petition Under 37 CFR 1.137(b)." This is **not** a final agency decision within the meaning of 5 USC 704.

The above-identified application became abandoned for failure to timely file a proper response to the final Office action, mailed July 5, 2007, which set a shortened statutory period for reply of three months. No reply having been received, the application became abandoned on October 6, 2007. The Office mailed a Notice of Abandonment on February 5, 2008. Applicants filed a petition to revive under 37 CFR 1.137(b) on April 19, 2010. However, the

petition was dismissed in a decision mailed on June 21, 2010. The decision pointed out that the application had been abandoned for an extended period of time, and requested applicants to account for the delay.

On renewed petition, petitioner has explained that applicants made "the difficult choice...to not respond to the July 5, 2007 Final Office Action because the company was in financial trouble and thus could not justify the expense of prosecuting the above-identified patent in view of the company's diminished funds."

Unfortunately, such a statement indicates that applicants intentionally abandoned the application. Accordingly, the above-identified application can not be revived pursuant to 37 CFR 1.137(b).

Further correspondence with respect to this matter should be addressed as follows:

By mail: Mail Stop Petitions
Commissioner for Patents
P.O. Box 1450
Alexandria VA 22313-1450

By FAX: (571)273-8300
Attn: Office of Petitions

Telephone inquiries concerning this decision may be directed to the undersigned at 571-272-3207.

Cliff Congo
Petitions Attorney
Office of Petitions

UNITED STATES PATENT AND TRADEMARK OFFICE

Commissioner for Patents
United States Patent and Trademark Office
P.O. Box 1450
Alexandria, VA 22313-1450
www.uspto.gov

In re Patent No. 7121134
Issue Date: October 17,2006
Application No. 10678692
Filed: October 3,2003
Attorney Docket No. 02-20

:
:DECISION GRANTING PETITION
:UNDER 37 CFR 1.378(c)
:

This is a decision on the electronic petition, filed December 1,2010 ,under 37 CFR 1.378(c) to accept the unintentionally delayed payment of the 3.5 year maintenance fee for the above-identified patent.

The petition is **GRANTED**.

The maintenance fee is accepted, and the above-identified patent reinstated as of December 1,2010 .
This decision also constitutes notice that the fee has been accepted. An electronic copy of the petition and this decision has been created as an entry in the Image File Wrapper. Nevertheless, petitioner should print and retain an independent copy.

Telephone inquiries related to this electronic decision should be directed to the Electronic Business Center at 1-866-217-9197.

PTO/SB/66 (03-09)
Approved for use through 03/31/2012. OMB 0651-0016
U.S. Patent and Trademark Office: U.S. DEPARTMENT OF COMMERCE
Under the Paperwork Reduction Act of 1995, no persons are required to respond to a collection of information unless it displays valid OMB control number.

PETITION TO ACCEPT UNINTENTIONALLY DELAYED PAYMENT OF MAINTENANCE FEE IN AN EXPIRED PATENT (37 CFR 1.378(c))

Patent Number	Issue Date (YYYY-MM-DD)	Application Number	Filing Date (YYYY-MM-DD)	Docket Number (if applicable)
7121134	2006-10-17	10678692	2003-10-03	011187US2

CAUTION: Maintenance fee (and surcharge, if any) payment must correctly identify: (1) the patent number and (2) the application number of the actual U.S. application leading to issuance of that patent to ensure the fee(s) is/are associated with the correct patent. 37 CFR 1.366(c) and (d).

SMALL ENTITY
☐ Patentee claims, or has previously claimed, small entity status. See 37 CFR 1.27.

LOSS OF ENTITLEMENT TO SMALL ENTITY STATUS
☐ Patentee is no longer entitled to small entity status. See 37 CFR 1.27(g)

NOT Small Entity			Small Entity		
	Fee	Code		Fee	Code
◉	3 ½ year	(1551)	◯	3 ½ year	(2551)
◯	7 ½ year	(1552)	◯	7 ½ year	(2552)
◯	11 ½ year	(1553)	◯	11 ½ year	(2553)

SURCHARGE
The surcharge required by 37 CFR 1.20(i)(2) (Fee Code 1558) must be paid as a condition of accepting unintentionally delayed payment of the maintenance fee.

MAINTENANCE FEE (37 CFR 1.20(e)-(g))
The appropriate maintenance fee must be submitted with this petition.

STATEMENT
THE UNDERSIGNED CERTIFIES THAT THE DELAY IN PAYMENT OF THE MAINTENANCE FEE TO THIS PATENT WAS UNINTENTIONAL

PETITIONER(S) REQUEST THAT THE DELAYED PAYMENT OF THE MAINTENANCE FEE BE ACCEPTED AND THE PATENT REINSTATED

THIS PORTION MUST BE COMPLETED BY THE SIGNATORY OR SIGNATORIES

37 CFR 1.378(d) states: "Any petition under this section must be signed by an attorney or agent registered to practice before the Patent and Trademark Office, or by the patentee, the assignee, or other party in interest."

I certify, in accordance with 37 CFR 1.4(d)(4) that I am

◉ An attorney or agent registered to practice before the Patent and Trademark Office

◯ A sole patentee

◯ A joint patentee; I certify that I am authorized to sign this submission on behalf of all the other patentees.

◯ A joint patentee; all of whom are signing this e-petition

◯ The assignee of record of the entire interest

Under the Paperwork Reduction Act of 1995, no persons are required to respond to a collection of information unless it displays valid OMB control number.

Patent Practitioner			
A signature of the applicant or representative is required in accordance with 37 CFR 1.33 and 10.18. Please see 37 CFR 1.4(d) for the form of the signature			
Signature	/MICHAEL E. MARION/	Date (YYYY-MM-DD)	2010-12-01
Name	Michael E. Marion	Registration Number	32266

This collection of information is required by 37 CFR 1.378(c). The information is required to obtain or retain a benefit by the public which is to file (and by the USPTO to process) an application. Confidentiality is governed by 35 U.S.C. 122 and 37 CFR 1.11 and 1.14. This collection is estimated to take 1 hour to complete, including gathering, preparing, and submitting the completed application form to the USPTO. Time will vary depending upon the individual case. Any comments on the amount of time you require to complete this form and/ or suggestions for reducing this burden, should be sent to the Chief Information Officer, U.S. Patent and Trademark Office, U.S. Department of Commerce, P.O. Box 1450, Alexandria, VA 22313-1450. DO NOT SEND FEES OR COMPLETED FORMS TO THIS ADDRESS. **This form can only be used when in conjunction with EFS-Web. If this form is mailed to the USPTO, it may cause delays in reinstating the patent.**

Privacy Act Statement

The Privacy Act of 1974 (P.L. 93-579) requires that you be given certain information in connection with your submission of the attached form related to a patent application or patent. Accordingly, pursuant to the requirements of the Act, please be advised that: (1) the general authority for the collection of this information is 35 U.S.C. 2(b)(2); (2) furnishing of the information solicited is voluntary; and (3) the principal purpose for which the information is used by the U.S. Patent and Trademark Office is to process and/or examine your submission related to a patent application or patent. If you do not furnish the requested information, the U.S. Patent and Trademark Office may not be able to process and/or examine your submission, which may result in termination of proceedings or abandonment of the application or expiration of the patent.

The information provided by you in this form will be subject to the following routine uses:

1. The information on this form will be treated confidentially to the extent allowed under the Freedom of Information Act (5 U.S.C. 552) and the Privacy Act (5 U.S.C. 552a). Records from this system of records may be disclosed to the Department of Justice to determine whether the Freedom of Information Act requires disclosure of these records.

2. A record from this system of records may be disclosed, as a routine use, in the course of presenting evidence to a court, magistrate, or administrative tribunal, including disclosures to opposing counsel in the course of settlement negotiations.

3. A record in this system of records may be disclosed, as a routine use, to a Member of Congress submitting a request involving an individual, to whom the record pertains, when the individual has requested assistance from the Member with respect to the subject matter of the record.

4. A record in this system of records may be disclosed, as a routine use, to a contractor of the Agency having need for the information in order to perform a contract. Recipients of information shall be required to comply with the requirements of the Privacy Act of 1974, as amended, pursuant to 5 U.S.C. 552a(m).

5. A record related to an International Application filed under the Patent Cooperation Treaty in this system of records may be disclosed, as a routine use, to the International Bureau of the World Intellectual Property Organization, pursuant to the Patent Cooperation Treaty.

6. A record in this system of records may be disclosed, as a routine use, to another federal agency for purposes of National Security review (35 U.S.C. 181) and for review pursuant to the Atomic Energy Act (42 U.S.C. 218(c)).

7. A record from this system of records may be disclosed, as a routine use, to the Administrator, General Services, or his/her designee, during an inspection of records conducted by GSA as part of that agency's responsibility to recommend improvements in records management practices and programs, under authority of 44 U.S.C. 2904 and 2906. Such disclosure shall be made in accordance with the GSA regulations governing inspection of records for this purpose, and any other relevant (i.e., GSA or Commerce) directive. Such disclosure shall not be used to make determinations about individuals.

8. A record from this system of records may be disclosed, as a routine use, to the public after either publication of the application pursuant to 35 U.S.C. 122(b) or issuance of a patent pursuant to 35 U.S.C. 151. Further, a record may be disclosed, subject to the limitations of 37 CFR 1.14, as a routine use, to the public if the record was filed in an application which became abandoned or in which the proceedings were terminated and which application is referenced by either a published application, an application open to public inspections or an issued patent.

9. A record from this system of records may be disclosed, as a routine use, to a Federal, State, or local law enforcement agency, if the USPTO becomes aware of a violation or potential violation of law or regulation.

UNITED STATES PATENT AND TRADEMARK OFFICE

Commissioner for Patents
United States Patent and Trademark Office
P.O. Box 1450
Alexandria, VA 22313-1450
www.uspto.gov

MAILED
NOV 07 2011
OFFICE OF PETITIONS

EDWARD J. MARSHAL
ATTORNEY AT LAW
8705 SHOAL CREEK BLVD.
SUITE 202
AUSTIN, TX 78757

In re Application of	:	
Jeffrey C. Herold	:	
Application No. 10/678,992	:	DECISION ON PETITION
Filed: October 2, 2003	:	TO WITHDRAW
Attorney Docket No. 000409.000007	:	FROM RECORD
	:	

This is a decision on the renewed Request to Withdraw as attorney or agent of record under 37 C.F.R. § 1.36(b), filed October 19, 2011.

The request is **APPROVED**.

A grantable request to withdraw as attorney/agent of record must be signed by every attorney/agent seeking to withdraw or contain a clear indication that one attorney is signing on behalf of another/others. A request to withdraw will not be approved unless at least 30 (thirty) days would remain between the date of approval and the later of the expiration date of a time to file a response or the expiration date of the maximum time period which can be extended under 37 C.F.R. § 1.136(a).

The request was signed by Edward J. Marshall on behalf of all attorneys of record. All attorneys/agents have been withdrawn. Applicant is reminded that there is no attorney of record at this time.

All future correspondence will be directed to the first named inventor Jeffrey C. Herold at the address indicated below.

Telephone inquiries concerning this decision should be directed to Terri Johnson at 571-272-2991.

/Terri Johnson/
Terri Johnson
Petitions Examiner
Office of Petitions

cc: **Jeffrey C. Herold**
West Coast Trends
17811 Jamestown Lane
Huntington Beach, CA 92647

UNITED STATES PATENT AND TRADEMARK OFFICE

UNITED STATES DEPARTMENT OF COMMERCE
United States Patent and Trademark Office
Address: COMMISSIONER FOR PATENTS
P.O. Box 1450
Alexandria, Virginia 22313-1450
www.uspto.gov

APPLICATION NUMBER	FILING OR 371(C) DATE	FIRST NAMED APPLICANT	ATTY. DOCKET NO./TITLE
10/678,992	10/02/2003	Jeffrey C. Herold	000409.000007

CONFIRMATION NO. 1547

POWER OF ATTORNEY NOTICE

87457
Edward J. Marshall, Attorney at Law
8705 Shoal Creek Blvd.
Suite 202
Austin, TX 78757

OC000000050841191

Date Mailed: 11/07/2011

NOTICE REGARDING CHANGE OF POWER OF ATTORNEY

This is in response to the Power of Attorney filed 10/19/2011.

- The withdrawal as attorney in this application has been accepted. Future correspondence will be mailed to the new address of record. 37 CFR 1.33.

/tsjohnson/

Office of Data Management, Application Assistance Unit (571) 272-4000, or (571) 272-4200, or 1-888-786-0101

UNITED STATES PATENT AND TRADEMARK OFFICE

Commissioner for Patents
United States Patent and Trademark Office
P.O. Box 1450
Alexandria, VA 22313-1450
www.uspto.gov

HAYES SOLOWAY P.C.
3450 E. SUNRISE DRIVE, SUITE 140
TUCSON AZ 85718

MAILED
OCT 07 2010
OFFICE OF PETITIONS

In re Application of	:	
Gordon Bowman, et al.	:	
Application No. 10/679,181	:	DECISION ON PETITION
Filed: October 3, 2003	:	TO WITHDRAW
Attorney Docket No. GLH 08-896329	:	FROM RECORD
	:	

This is a decision on the Request to Withdraw as attorney or agent of record under 37 C.F.R. § 1.36(b), filed September 15, 2010.

The request is **NOT APPROVED**.

A grantable request to withdraw as attorney/agent of record must be signed by every attorney/agent seeking to withdraw or contain a clear indication that one attorney is signing on behalf of another/others. A request to withdraw will not be approved unless at least 30 (thirty) days would remain between the date of approval and the later of the expiration date of a time to file a response or the expiration date of the maximum time period which can be extended under 37 C.F.R. § 1.136(a).

The request cannot be approved because none of the certifications were made on the PTO/SB/83 form.

All future communications from the Office will continue to be directed to the above-listed address until otherwise notified by applicant.

Telephone inquiries concerning this decision should be directed to Terri Johnson at 571-272- 2991.

/Terri Johnson/
Terri Johnson
Petitions Examiner
Office of Petitions

cc: **Corel Corporation**
1600 Carling Avenue
Ottawa, Ontario K1Z 8R7
Canada

UNITED STATES PATENT AND TRADEMARK OFFICE

Commissioner for Patents
United States Patent and Trademark Office
P.O. Box 1450
Alexandria, VA 22313-1450
www.uspto.gov

OSHA LIANG L.L.P.
TWO HOUSTON CENTER
909 FANNIN, SUITE 3500
HOUSTON TX 77010

MAILED

MAR 11 2011

OFFICE OF PETITIONS

In re Application of	:	
FURET et al	:	DECISION ACCORDING STATUS
Application No. 10/679,241	:	UNDER 37 CFR 1.47(a)
Filed: 10/06/2003	:	
Title: TRANSMISSION AND RECEPTION	:	
OF TELEVISION PROGRAMMES AND	:	
OTHER DATA	:	

This is in response to the petition under 37 CFR 1.47(a) filed March 18, 2004. The Office sincerely apologizes for the delay in responding to the present petition.

The petition is **GRANTED**.

Applicants have shown that the non-signing inventor has refused or cannot be located to join in the filing of the above-identified application.

The above-identified application and papers have been reviewed and are in compliance with 37 CFR 1.47(a). This application is hereby accorded Rule 1.47(a) status. As provided in Rule 1.47(c), this Office will forward notice of this application's filing to the non-signing inventor at the address given in the petition. Notice of the filing of this application will also be published in the Official Gazette.

The Office will charge the $130.00 petition fee to the Deposit Account, which was the amount due on March 18, 2004, the date of the filing of the petition.

The matter is being referred to Technology Center Art Unit 2425.

Inquiries regarding this decision should be directed to the undersigned at (571) 272-3211.

C. T. Donnell

Christina Tartera Donnell
Senior Petitions Attorney
Office of Petitions

UNITED STATES PATENT AND TRADEMARK OFFICE

Commissioner for Patents
United States Patent and Trademark Office
P.O. Box 1450
Alexandria, VA 22313-1450
www.uspto.gov

Mr. Jacques Moly
OZE
36 rue des Lilas
75019 Paris
FRANCE

MAILED
MAR 11 2011
OFFICE OF PETITIONS

In re Application of :
FURET et al :
Application No. 10/679,241 : LETTER
Filed: 10/06/2003 :
Title: TRANSMISSION AND RECEPTION OF :
TELEVISION PROGRAMMES AND OTHER :
DATA :

Dear Mr. Moly:

You are named as a joint inventor in the above identified United States patent application, filed under the provisions of 35 U.S.C. 116 (United States Code), and 37 CFR 1.47(a), Rules of Practice in Patent Cases. Should a patent be granted on the application you will be designated therein as a joint inventor.

As a named inventor you are entitled to inspect any paper in the file wrapper of the application, order copies of all or any part thereof (at a prepaid cost per 37 CFR 1.19) or make your position of record in the application. Alternatively, you may arrange to do any of the preceding through a registered patent attorney or agent presenting written authorization from you. If you care to join the application, counsel of record (see below) would presumably assist you. Joining in the application would entail the filing of an appropriate oath or declaration by you pursuant to 37 CFR 1.63.

Requests for information regarding your application should be directed to the File Information Unit at 571-272-3150. Information regarding how to pay for and order a copy of the application, or a specific paper in the application, should be directed to Certification Division at 571-272-3150 or 1-800-972-6382 (outside the Washington D.C. area).

C. T. Donnell
Christina Tartera Donnell
Senior Petitions Attorney
Office of Petitions

OSHA LIANG L.L.P.
TWO HOUSTON CENTER
909 FANNIN, SUITE 3500
HOUSTON TX 77010

UNITED STATES PATENT AND TRADEMARK OFFICE

Commissioner for Patents
United States Patent and Trademark Office
P.O. Box 1450
Alexandria, VA 22313-1450
www.uspto.gov

In re Patent No. 6994433
Issue Date: February 7,2006
Application No. 10679398
Filed: October 7,2003
Attorney Docket No. 129968.00901

:
:DECISION GRANTING PETITION
:UNDER 37 CFR 1.378(c)
:

This is a decision on the electronic petition, filed August 20,2010 ,under 37 CFR 1.378(c) to accept the unintentionally delayed payment of the 3.5 year maintenance fee for the above-identified patent.

The petition is **GRANTED**.

The maintenance fee is accepted, and the above-identified patent reinstated as of August 20,2010 . This decision also constitutes notice that the fee has been accepted. An electronic copy of the petition and this decision has been created as an entry in the Image File Wrapper. Nevertheless, petitioner should print and retain an independent copy.

Telephone inquiries related to this electronic decision should be directed to the Electronic Business Center at 1-866-217-9197.

PTO/SB/131 (02-10)
Approved for use through 02/28/2011. OMB 0651-0020
U.S. Patent and Trademark Office: U.S. DEPARTMENT OF COMMERCE

Under the Paperwork Reduction Act of 1965, no persons are required to respond to a collection of information unless it displays a valid OMB control number.

REQUEST FOR RECALCULATION OF PATENT TERM ADJUSTMENT IN VIEW OF *WYETH**

Attorney Docket Number:	10984-0755001		
Application Number:	10/679,788	Filing Date (or 371(b) or (f) Date):	October 6, 2003
Patent Number:	7,664,770	Issue Date:	February 16, 2010
First Named Inventor:	Lincoln Jackson		
Title:	Smart Browser Panes		

PATENTEE HEREBY REQUESTS RECALCULATION OF THE PATENT TERM ADJUSTMENT (PTA) UNDER 35 USC 154(b) INDICATED ON THE ABOVE-IDENTIFIED PATENT. THE PATENTEE'S SOLE BASIS FOR REQUESTING THE RECALCULATION IS THE USPTO'S PRE-*WYETH* INTERPRETATION OF 35 U.S.C. 154(b)(2)(A).

Note: This form is only for requesting a recalculation of PTA for patents issued before March 2, 2010, if the sole basis for requesting the recalculation is the USPTO's pre-Wyeth interpretation of 35 U.S.C. 154(b)(2)(A). See Instruction Sheet on page 2 for more information.

Patentees are reminded that to preserve the right to review in the United States District Court for the District of Columbia of the USPTO's patent term adjustment determination, a patentee must ensure that he or she also takes the steps required under 35 U.S.C. 154(b)(3) and (b)(4) and 37 CFR 1.705 in a timely manner.

**Wyeth v. Kappos*, No. 2009-1120 (Fed. Cir., Jan. 7, 2010).

Signature /Paul Pysher/	Date August 16, 2010
Name: (Print/Type) Paul A. Pysher	Registration Number: 40,780

Note: *Signatures of all the inventors or assignees of record of the entire interest or their representative(s) are required in accordance with 37 CFR 1.33 and 11.18. Please see 37 CFR 1.4(d) for the form of the signature. If necessary, submit multiple forms for more than one signature, see below**.*

☐ *Total of _____ forms are submitted.

The information is required to obtain or retain a benefit by the public which is to file (and by the USPTO to process) an application. Confidentiality is governed by 35 U.S.C. 122 and 37 CFR 1.11 and 1.14. This collection is estimated to take 12 hours to complete, including gathering, preparing, and submitting the completed application form to the USPTO. Time will vary depending upon the individual case. Any comments on the amount of time you require to complete this form and/or suggestions for reducing this burden, should be sent to the Chief Information Officer, U.S. Patent and Trademark Office, U.S. Department of Commerce, P.O. Box 1450, Alexandria, VA 22313-1450. DO NOT SEND FEES OR COMPLETED FORMS TO THIS ADDRESS. **SEND TO: Commissioner for Patents, P.O. Box 1450, Alexandria, VA 22313-1450.**

If you need assistance in completing the form, call 1-800-PTO-9199 and select option 2.

UNITED STATES PATENT AND TRADEMARK OFFICE

UNITED STATES DEPARTMENT OF COMMERCE
United States Patent and Trademark Office
Address: COMMISSIONER FOR PATENTS
P.O. Box 1450
Alexandria, Virginia 22313-1450
www.uspto.gov

FISH & RICHARDSON PC
P.O. BOX 1022
MINNEAPOLIS, MN 55440-1022

Mail Date: 08/19/2010

Applicant	: Lincoln Jackson	: DECISION ON REQUEST FOR
Patent Number	: 7664770	: RECALCULATION of PATENT
Issue Date	: 02/16/2010	: TERM ADJUSTMENT IN VIEW
Application No	: 10/679,788	: OF WYETH AND NOTICE OF INTENT TO
Filed	: 10/06/2003	: ISSUE CERTIFICATE OF CORRECTION
		:

The Request for Recalculation is **GRANTED** to the extent indicated.

The patent term adjustment has been determined to be **648** days. The USPTO will *sua sponte* issue a certificate of correction reflecting the amount of PTA days determined by the recalculation.

Prior to the issuance of the certificate of correction, the USPTO will afford patentee an opportunity to be heard and request reconsideration. Accordingly, patentee has **one month or thirty (30) days**, whichever is longer, to file a request for reconsideration of this patent term adjustment calculation. See 35 U.S.C. 154(b)(3)(B)(ii) and 37 CFR 1.322(a)(4). No extensions of time will be granted under 37 CFR 1.136.

Patentee should use document code PET.OP if electronically filing a request for reconsideration of this patent term adjustment calculation. The patentee must also include the information required by 37 CFR 1.705(b)(2) and the fee required by 37 CFR 1.18(e). If patentee does not file a timely request for reconsideration of this patent term adjustment calculation including the information required by 37 CFR 1.705(b)(2) and the fee required by 37 CFR 1.18(e), the USPTO will issue a certificate of correction reflecting the PTA determination noted above.

Patentee should be aware that in order to preserve the right to review in the United States District Court for the District of Columbia of the USPTO patent term adjustment determination, patentee must ensure that he or she also take the steps required under 35 U.S.C. 154(b)(4)(A) in a timely manner. Nothing in the request for recalculation should be construed as providing an alternative time frame for commencing a civil action under 35 U.S.C. 154(b)(4)(A).

Any questions concerning this decision should be directed to the Office of Patent Legal Administration at 571-272-7702.

UNITED STATES PATENT AND TRADEMARK OFFICE

Commissioner for Patents
United States Patent and Trademark Office
P.O. Box 1450
Alexandria, VA 22313-1450
www.uspto.gov

Paper No.

NOVO NORDISK, INC.
INTELLECTUAL PROPERTY DEPARTMENT
100 COLLEGE ROAD WEST
PRINCETON NJ 08540

MAILED

AUG 03 2010

OFFICE OF PETITIONS

In re Patent No. 7,384,967	:	
Polisetti et al.	:	DECISION ON REQUEST
Issue Date: June 10, 2008	:	FOR RECONSIDERATION OF
Application No. 10/679,887	:	PATENT TERM ADJUSTMENT
Filed: October 6, 2003	:	and
Attorney Docket No.	:	NOTICE OF INTENT TO ISSUE
6511.204-US	:	CERTIFICATE OF CORRECTION

This letter is in response to the "COMMUNICATION REQUESTING RECONSIDERATION OF PATENT TERM ADJUSTMENT DETERMINATION UNDER 37 CFR 1.705" filed on January 8, 2010, in which patentees request reconsideration of the patent term adjustment requesting that the patent term adjustment indicated on the above-identified patent be corrected to indicate that the term of the above-identified patent is extended or adjusted by two hundred eighty-two (282) days. For the reasons stated below, the petition will be treated as a petition requesting that the patent term adjustment indicated on the above-identified patent be corrected to indicate that the term of the above-identified patent is extended or adjusted by four hundred thirty (430) days.

The petition to correct the patent term adjustment indicated on the above-identified patent to indicate that the term of the above-identified patent is extended or adjusted by four hundred thirty (430) days is **GRANTED to the extent indicated herein.**

On June 10, 2008, the above-identified application matured into U.S. Patent No. 7,384,967. The patent issued with a revised Patent Term Adjustment of 317 days. On August 5, 2008, a request for reconsideration of the patent term adjustment pursuant to 37 CFR 1.705(d) was filed. On June 23, 2009, a decision was mailed granting the request to the extent that a certificate of correction was issued indicating the patent term

adjustment at the time of issuance was 290 days. On July 22, 2009, a request for reconsideration was filed. On December 8, 2009, a decision was mailed granted the request and stating that the patent term adjustment was revised to 164 days.

On January 8, 2010, the subject request for reconsideration was filed, stating that the patent term adjustment was incorrect.

Patentees dispute the reductions of 46 and 80 days under 37 CFR 1.704(c)(10) for the filing of an RCE on October 23, 2006, and on August 29, 2007, respectively. Patentees state that the RCEs filed on October 23, 2006 and August 29, 2007 should not be considered "other papers". Petitioners further assert that the RCEs were expressly requested by the examiner. Lastly, petitioners assert that a period of adjustment for Office delay should be entered for the period between four (4) months after the filing of the RCE filed on October 23, 2006, and the mailing of the notice of allowance mailed in reply on August 29, 2007.

At the outset, MPEP 2732 states, in pertinent part:

> 37 CFR 1.704(c)(10) establishes submission of an amendment under 37 CFR 1.312 or other paper after a notice of allowance has been given or mailed as a circumstance that constitutes a failure of an applicant to engage in reasonable efforts to conclude processing or examination of an application. The submission of amendments (or other papers) after an application is allowed may cause substantial interference with the patent issue process.
>
> Certain papers filed after allowance are not considered to be a failure to engage in reasonable efforts to conclude processing or examination of an application. See Clarification of 37 CFR 1.704(c)(10) - Reduction of Patent Term Adjustment for Certain Types of Papers Filed After a Notice of Allowance has been Mailed, 1247 Off. Gaz. Pat. Office 111 (June 26, 2001). The submission of the following papers after a "Notice of Allowance" is not considered a failure to engage in reasonable efforts to conclude processing or examination of an application: (1) Fee(s) Transmittal (PTOL-85B); (2) Power of Attorney; (3) Power to Inspect; (4) Change of Address; (5) Change of Status

> (small/not small entity status); (6) a response to the examiner's reasons for allowance or a request to correct an error or omission in the "Notice of Allowance" or "Notice of Allowability;" and (7) letters related to government interests (e.g., those between NASA and the Office). Papers that **will** be considered a failure to engage in reasonable efforts to conclude processing or examination of an application include: (1) a request for a refund; (2) a status letter; (3) amendments under 37 CFR 1.312; (4) late priority claims; (5) a certified copy of a priority document; (6) drawings; (7) letters related to biologic deposits; and (8) oaths or declarations. 37 CFR 1.704(c)(10) provides that in such a case the period of adjustment set forth in 37 CFR 1.703 shall be reduced by the lesser of: (1) the number of days, if any, beginning on the date the amendment under 37 CFR 1.312 was filed and ending on the mailing date of the Office action or notice in response to the amendment under 37 CFR 1.312 or such other paper; or (2) four months.
>
> (emphasis in original)

Petitioners are incorrect with regards to the RCE filed on October 23, 2006, accompanied by a request to correct the inventorship. The RCE filed on October 23, 2006, is considered an "other paper," and the reduction of 46 days will not be removed. The regulation 37 CFR 1.704(c)(10) merely sets forth examples of what will be considered a failure to engage in reasonable efforts to conclude processing. However, the examples set forth in the regulation are non-limiting.

The Federal Register[1] states, in pertinent part:

> 35 U.S.C. 154(b)(2)(C) provides that: (1) The Office is to prescribe regulations establishing the circumstances that constitute a failure of an applicant to engage in reasonable efforts to conclude processing or examination of an application (35 U.S.C. 154(b)(2)(C)(iii)); and (2) the period of patent term adjustment under 35 U.S.C. 154(b)(1) shall be reduced

[1] 65 Fed. Reg. 56366 (Sep. 18, 2000).

> by a period equal to the period of time during which the applicant failed to engage in reasonable efforts to conclude prosecution of an application (35 U.S.C. 154(b)(2)(C)(i)). Thus, promulgating regulations that set forth "strict examples" of circumstances of when applicant has failed to engage in reasonable efforts to conclude prosecution (or processing or examination) of an application (rather than considering applications on an *ad hoc* or case-by-case basis) is not only consistent with 35 U.S.C. 154(b)(2)(C), it is what the Office is required to do under 35 U.S.C. 154(b)(2)(C)(iii).[2]

The filing of a petition to correct inventorship delays processing since it must be answered by Office personnel.

With regards to the RCE filed on August 29, 2007, petitioners are incorrect. As an RCE had already been filed on October 23, 2006, and no Office action had been mailed in response, the RCE filed on August 29, 2007, is a supplemental paper.

Further, the RCE filed on August 29, 2007, is accompanied by an amendment after the mailing of the notice of allowance. An amendment after the notice of allowance is among the papers which is stated as one of the examples in MPEP 2732 as a failure to engage in reasonable efforts to conclude processing or examination of the application. Still further, 37 CFR 1.704(c)(10) does not distinguish between papers which are or are not expressly request by the examiner. On August 29, 2007, the RCE and amendment were filed. On November 16, 2007, 80 days after the supplemental papers were filed, the Office mailed a notice of allowance in response to those papers.

With regard to petitioner's assertion that a period of adjustment for Office delay should be entered for the period between four (4) months after the filing of the RCE filed on October 23, 2006, and the mailing of the notice of allowance in response on November 16, 2007, petitioner's argument is well taken. On October 23, 2006, an RCE was filed in response to the notice of allowance. On November 16, 2007, four months and 266 days after the filing of the RCE, the Office mailed a notice of

---

[2] Id. at 56377-78.

allowance. Therefore, entry of a period of Office delay of 266 days is warranted.

The patent term adjustment will be updated to 430 days (592 (326 + 266) days of Office delay - 162 days applicant delay).

The Office will *sua sponte* issue a certificate of correction. Pursuant to 37 CFR 1.322, the Office will not issue a certificate of correction without first providing assignee or patentee an opportunity to be heard. Accordingly, patentees are given **one (1) month or thirty (30) days**, whichever is longer, from the mail date of this decision to respond. No extensions of time will be granted under § 1.136.

The Office acknowledges submission of the $200.00 fee set forth in 37 CFR 1.18(e). No additional fees are required.

The application is being forwarded to the Certificates of Correction Branch for issuance of a certificate of correction. The Office will issue a certificate of correction indicating that the term of the above-identified patent is extended or adjusted by **four hundred thirty (430)** days.

Telephone inquiries specific to this matter should be directed to Senior Petitions Attorney Douglas I. Wood at (571) 272-3231.

Anthony Knight
Director
Office of Petitions

Enclosure: Copy of DRAFT Certificate of Correction

UNITED STATES PATENT AND TRADEMARK OFFICE

CERTIFICATE OF CORRECTION

PATENT : 7,384,967 B2

DATED : **Jun. 10, 2008** **DRAFT**

INVENTOR(S) : Polisetti et al.

It is certified that error appears in the above-identified patent and that said Letters Patent is hereby corrected as shown below:

On the cover page,

[*] Notice: Subject to any disclaimer, the term of this patent is extended or adjusted under 35 USC 154(b) by 317 days.

Delete the phrase "by 317 days" and insert – by 430 days--

UNITED STATES PATENT AND TRADEMARK OFFICE

COMMISSIONER FOR PATENTS
UNITED STATES PATENT AND TRADEMARK OFFICE
P.O. BOX 1450
ALEXANDRIA, VA 22313-1450
www.uspto.gov

Paper No.

NOVO NORDISK, INC.
INTELLECTUAL PROPERTY DEPARTMENT
100 COLLEGE ROAD WEST
PRINCETON NJ 08540

MAILED

DEC 01 2010

OFFICE OF PETITIONS

In re Patent No. 7384967	: DECISION ON REQUEST
Polisetti et al.	: FOR
Issue Date: 06/10/2008	: RECONSIDERATION OF
Application No. 10/679887	: PATENT TERM ADJUSTMENT
Filed: 10/06/2003	: and
Atty Docket No.	: NOTICE OF INTENT TO ISSUE
6511.204-US	: CERTIFICATE OF CORRECTION

This is a decision on the petition filed on September 3, 2010, which is being treated as a petition under 37 CFR 1.705(d) requesting that the patent term adjustment indicated on the above-identified patent be corrected to indicate that the term of the above-identified patent is extended or adjusted by four hundred sixteen (416) days.

The petition to correct the patent term adjustment indicated on the above-identified patent to indicate that the term of the above-identified patent is extended or adjusted by four hundred sixteen (416) days is **GRANTED**.

The Office acknowledges submission of the $200.00 fee set forth in 37 CFR 1.18(e). No additional fees are required.

The Office thanks patentees for their good faith and candor in bringing this to the attention of the Office.

The application is being forwarded to the Certificates of Correction Branch for issuance of a certificate of correction. The Office will issue a certificate of correction indicating that the term of the above-identified patent is extended or adjusted by **four hundred sixteen (416)** days.

Telephone inquiries specific to this matter should be directed to the undersigned at (571) 272-3231.

D Wood

Douglas I. Wood
Senior Petitions Attorney
Office of Petitions

Enclosure: Copy of DRAFT Certificate of Correction

UNITED STATES PATENT AND TRADEMARK OFFICE

CERTIFICATE OF CORRECTION

PATENT : 7,384,967 B2

DATED : **Jun., 10, 2008** **DRAFT**

INVENTOR(S) : Polisetti et al.

It is certified that error appears in the above-identified patent and that said Letters Patent is hereby corrected as shown below:

On the cover page,

[*] Notice: Subject to any disclaimer, the term of this patent is extended or adjusted under 35 USC 154(b) by 430 days.

Delete the phrase "by 430 days" and insert – by 416 days--

UNITED STATES PATENT AND TRADEMARK OFFICE

Commissioner for Patents
United States Patent and Trademark Office
P.O. Box 1450
Alexandria, VA 22313-1450
www.uspto.gov

Paper No.

JONES DAY
555 SOUTH FLOWER STREET FIFTIETH FLOOR
LOS ANGELES CA 90071

MAILED

JAN 04 2011

OFFICE OF PETITIONS

NOTICE

In re Patent No. 7101396 :
Issue Date: 09/05/2006 :
Application Number: 10/680071 :
Filing or 371(c) Date: 10/06/2003 :
Attorney Docket Number: 816020-100042-US :

This is a notice regarding your request for acceptance of a fee deficiency submission under 37 CFR 1.28 filed on October 26, 2010.

The Office no longer investigates or rejects original or reissue patent under 37 CFR 1.56. **1098 Off. Gaz. Pat. Office 502 (January 3, 1989)**. Therefore, nothing in this Notice is intended to imply that an investigation was done.

Your fee deficiency submission under 37 CFR 1.28 is hereby **ACCEPTED**.

This patent is no longer entitled to small entity status. Accordingly, all future fees paid in this patent must be paid at the large entity rate.

The address in the petition is different than the correspondence address. A courtesy copy of this decision will be sent to the address in the petition. All future correspondence, however, will be mailed solely to the address of record. A change of correspondence address should be filed if the correspondence address needs to be updated.

Inquiries related to this communication should be directed to the undersigned at (571) 272-3231.

D Wood
Douglas Wood
Attorney
Office of Petitions

Cc: JEFFREY J. HOHENSHELL
SENIOR PATENT COUNSEL
710 MEDTRONIC PARKWAY
MINNEAPOLIS MN 55432

UNITED STATES PATENT AND TRADEMARK OFFICE

Commissioner for Patents
United States Patent and Trademark Office
P.O. Box 1450
Alexandria, VA 22313-1450
www.uspto.gov

Paper No.

Glenn Patent Group
Suite L
3475 Edison Way
Menlo Park CA 94025

MAILED

DEC 29 2011

OFFICE OF PETITIONS

In re Application of :
Liljeryd et al. :
Application No. 10/680,224 :
Patent No.: 6,925,116 :
Filed: October 8, 2003 :
Issued: August 2, 2005 :
Attorney Docket No. 4441-0110P :
Title: SOURCE CODING :
ENHANCEMENT USING SPECTRAL-BAND :
REPLICATION :

DECISION ON PETITION
PURSUANT TO
37 C.F.R. § 1.28(c)

This is a notice regarding your request for acceptance of a fee deficiency submission pursuant to 37 C.F.R. § 1.28, received on December 13, 2011. On September 1, 1998, the Court of Appeals for the Federal Circuit held that 37 C.F.R. § 1.28(c) is the sole provision governing the time for correction of the erroneous payment of the issue fee as a small entity. See DH Technology v. Synergystex International, Inc. 154 F.3d 1333, 47 USPQ2d 1865 (Fed. Cir. Sept. 1, 1998).

The Office no longer investigates or rejects original or reissue applications under 37 C.F.R. § 1.56. 1098 Off. Gaz. Pat. Office 502 (January 3, 1989). Therefore, nothing in this notice is intended to imply that an investigation was done.

Petitioner has identified the particular type of fee that was erroneously paid as a small entity, when the small entity fee was actually paid, the small entity fee that was actually paid, the deficiency owed amount, and the total deficiency payment owed.

The deficiency payment in the amount of $640 has been received.

Your fee deficiency submission pursuant to 37 C.F.R. § 1.28(c) is hereby accepted. The petition is **GRANTED** accordingly.

This patent is no longer entitled to small entity status. Accordingly, all future fees paid in this patent must be paid at the large entity rate.

Telephone inquiries regarding *this decision* should be directed to the undersigned at (571) 272-3225.[1]

Paul Shanoski
Senior Attorney
Office of Petitions

1 Petitioner will note that all practice before the Office should be in writing, and the action of the Office will be based exclusively on the written record in the Office. See 37 C.F.R. § 1.2. As such, Petitioner is reminded that no telephone discussion may be controlling or considered authority for Petitioner's further action(s).

UNITED STATES PATENT AND TRADEMARK OFFICE

Commissioner for Patents
United States Patent and Trademark Office
P.O. Box 1450
Alexandria, VA 22313-1450
www.uspto.gov

WORKMAN NYDEGGER
1000 EAGLE GATE TOWER
60 EAST SOUTH TEMPLE
SALT LAKE CITY, UT 84111

MAILED

JAN 10 2011

OFFICE OF PETITIONS

In re Patent No. 7,054,538 :
Issue Date: May 30, 2006 :
Application No. 10/680,607 : NOTICE
Filed: October 6, 2003 :
Attorney Docket No. 15436.1248.78.1

This is a notice regarding your request for acceptance of a fee deficiency submission under 37 CFR 1.28. On September 1, 1998, the Court of Appeals for the Federal Circuit held that 37 CFR 1.28(c) is the sole provision governing the time for correction of the erroneous payment of the issue fee as a small entity. **See DH Technology v. Synergystex International, Inc. 154 F.3d 1333, 47 USPQ2d 1865 (Fed. Cir. Sept. 1, 1998).**

The Office no longer investigates or rejects original or reissue applications under 37 CFR 1.56. **1098 Off. Gaz. Pat. Office 502 (January 3, 1989).** Therefore, nothing in this Notice is intended to imply that an investigation was done.

Your fee deficiency submission under 37 CFR 1.28 is hereby **ACCEPTED**.

Inquiries related to this communication should be directed to Irvin Dingle at (571) 272-3210.

Irvin Dingle
Petitions Examiner
Office of Petitions

UNITED STATES PATENT AND TRADEMARK OFFICE

Commissioner for Patents
United States Patent and Trademark Office
P.O. Box 1450
Alexandria, VA 22313-1450
www.uspto.gov

MICROSOFT CORPORATION
ONE MICROSOFT WAY
REDMOND, WA 98052-6399

MAILED
FEB 07 2011
OFFICE OF PETITIONS

In re Patent No. 6,847,488	:	
Issue Date: January 25, 2005	:	
Application No. 10/680,610	:	NOTICE
Filed: October 7, 2003	:	
Patentee(s): Adrian Robert Leigh Travis	:	

This is a Notice regarding your request for acceptance of a fee deficiency submission under 37 CFR 1.28, filed on November 23, 2010.

The Office no longer investigates or rejects original or reissue applications under 37 CFR 1.56. 1098 Off. Gaz. Pat. Office 502 (January 3, 1989). Therefore, nothing in this Notice is intended to imply that an investigation was done.

Your fee deficiency submission under 37 CFR 1.28 is hereby **ACCEPTED**. Therefore, status as a small entity has been removed and any future fee(s) submitted must be paid at the large entity rate.

Inquiries related to this communication should be directed to the undersigned at (571) 272-3226.

Andrea Smith
Petitions Examiner
Office of Petitions

UNITED STATES PATENT AND TRADEMARK OFFICE

Commissioner for Patents
United States Patent and Trademark Office
P.O. Box 1450
Alexandria, VA 22313-1450
www.uspto.gov

Paper No.

FOLEY & LARDNER LLP
150 EAST GILMAN STREET
P.O. BOX 1497
MADISON WI 53701-1497

MAILED

JAN 06 2011

OFFICE OF PETITIONS

In re Application of	:	
Mody et al.	:	
Application Number: 10/680,629	:	ON APPLICATION FOR
Filing Date: 10/06/2003	:	PATENT TERM ADJUSTMENT
Attorney Docket Number	:	
088245-6147	:	

This is in response to the REQUEST FOR RECONSIDERATION OF PATENT TERM ADJUSTMENT FOR PATENT APPLICATION UNDER 37 C.F.R. § 1.705(b), filed on November 2, 2010. Applicants request that the determination of patent term adjustment be increased from 498 days to 1295 days. Applicants request this correction, in part, on the basis that the Office will take in excess of three years to issue this patent.

The request is **GRANTED TO THE EXTENT INDICATED**.

To the extent the instant application for patent term adjustment requests reconsideration of the patent term adjustment as it relates to the Office's failure to issue the patent within 3 years of the filing date, the application for patent term adjustment under 37 CFR 1.705(b) is **DISMISSED as PREMATURE**.

Knowledge of the actual date the patent issues is required to calculate the amount, if any, of additional patent term patentee is entitled to for Office failure to issue the patent within 3 years. See § 1.702(b). (This is true even where a request for continued examination (RCE) was filed). The computer will not undertake the § 1.702(b) calculation until the actual date of issuance of the patent has been determined. Likewise, the computer will not calculate any further Office delay under § 1.702(a)(4) or applicant delay under § 1.704(c)(10) until the actual date of issuance of the patent has been determined. As such, the Office can not make a determination on the correctness of the patent term adjustment until the patent has issued.

Requesting reconsideration of the patent term adjustment to be indicated on the patent under 37 CFR 1.705(b) based on the initial determination of patent term adjustment and a projected issuance date of the patent (or even the filing date of the request for continued examination) is premature. Accordingly, it is appropriate to dismiss as premature such a request.

Rather than file an application for patent term adjustment under 37 CFR 1.705(b) contesting the 37 CFR 1.702(b) calculation at the time of the mailing of the notice of allowance, applicants are advised that they may wait until the time of the issuance of the patent and file a request for reconsideration of the patent term adjustment pursuant to 37 CFR 1.705(d). As the USPTO does not calculate the amount of time earned pursuant to 37 CFR 1.702(b) until the time of the issuance of the patent, the Office will consider any request for reconsideration of the patent term adjustment due to an error in the calculation of 37 CFR 1.702(b) to be timely if the request for reconsideration is filed within two months of the issuance of the patent. However, as to all other bases for contesting the initial determination of patent term adjustment received with the notice of allowance, applicant must timely file an application for patent term adjustment prior to the payment of the issue fee[1].

The Office acknowledges submission of the $200.00 fee set forth in 37 CFR 1.18(e). No additional fees are required.

Any request for reconsideration of the patent term adjustment indicated on the patent must be timely filed within 2 months after issuance pursuant to 37 CFR 1.705(d) and must include payment of the required fee under 37 CFR 1.18(e).

To the extent that the instant application for patent term adjustment requests reconsideration of the PTA at the time of

---

[1] For example, if applicant disputes both the calculation of patent term adjustment under 37 CFR 1.702(a)(1) for Office failure to mail a first Office action or notice of allowance not later than fourteen months after the date on which the application was filed and under 37 CFR 1.702(b) for Office failure to issue a patent within three years of the actual filing date of the application, then applicant must still timely file an application for patent term adjustment prior to the payment of the issue fee to contest the calculation of Office delay in issuing a first Office action or notice of allowance. See 37 CFR 1.705(b) and 35 U.S.C. 154(b)(3)(B). A dispute as to the calculation of the §1.702(a)(1) period raised on request for reconsideration of patent term adjustment under 37 CFR 1.705(d) will be dismissed as untimely filed.

the mailing of the Notice of Allowance, the request is **GRANTED to the extent indicated**

The Office has updated the PALM and PAIR screens to reflect that the revised Patent Term Adjustment (PTA) determination at the time of the mailing of the Notice of Allowance is 295 days. A copy of the updated PAIR screen, showing the revised determination, is enclosed.

On August 5, 2010, the Office mailed a Determination of Patent Term Adjustment under 35 U.S.C. 154(b) in the above-identified application. Applicant was advised that the patent term adjustment to date was 498 days (835 days of PTO delay and 337 days of applicant delay).

The instant application for patent term adjustment was timely filed.[2]

Applicants state that the period of reduction for applicant delay in connection with the filing of a response, on July 2, 2008, to the non-final Office action mailed on January 31, 2007, should be 429 days, rather than 337 days as determined by the Office.

Petitioner's argument is persuasive, to a point.

1.704 states, in pertinent part:

> (b) With respect to the grounds for adjustment set forth in §§ 1.702(a) through (e), and in particular the ground of adjustment set forth in § 1.702(b), an applicant shall be deemed to have failed to engage in reasonable efforts to conclude processing or examination of an application for the cumulative total of any periods of time in excess of three months that are taken to reply to any notice or action by the Office making any rejection, objection, argument, or other request, measuring such three-month period from the date the notice or action was mailed or given to the applicant, in which case the period of adjustment set forth in § 1.703 shall be reduced by the number of days, if any, beginning on the day after the date that is three months after the date of mailing or

[2] PALM Records indicate that the issue fee was paid on November 2, 2010.

> transmission of the Office communication notifying the applicant of the rejection, objection, argument, or other request and ending on the date the reply was filed.
>
> (c) Circumstances that constitute a failure of the applicant to engage in reasonable efforts to conclude processing or examination of an application also include the following circumstances, which will result in the following reduction of the period of adjustment set forth in § 1.703 to the extent that the periods are not overlapping:
>
> ...
>
> (3) Abandonment of the application or late payment of the issue fee, in which case the period of adjustment set forth in §1.703 shall be reduced by the number of days, if any, beginning on the date of abandonment or the date after the date the issue fee was due and ending on the earlier of:
>
> (i) The date of mailing of the decision reviving the application or accepting late payment of the issue fee; or
>
> (ii) The date that is four months after the date the grantable petition to revive the application or accept late payment of the issue fee was filed;
>
> ...
>
> (7) Submission of a reply having an omission (§1.135(c)), in which case the period of adjustment set forth in § 1.703 shall be reduced by the number of days, if any, beginning on the day after the date the reply having an omission was filed and ending on the date that the reply or other paper correcting the omission was filed.

A review of the record indicates that on January 31, 2007, the non-final Office action was mailed. On July 31, 2007, three months and 92 days after the day after the date the Office action was mailed, a reply was filed. On November 21, 2007, an Office communication was mailed, stating that the reply of July

31, 2007 was not fully response to the prior Office action, and setting a one (1) month period for reply. A Notice of Abandonment was mailed on June 5, 2008. On July 2, 2008, a petition to revive the application and an amendment correcting the omission was filed, 337 days after the day after the date the reply containing the omission was filed. On October 21, 2008, the petition to revive was granted, 305 days after the date of abandonment of the application. Considering the 194 overlapping days between December 22, 2007, the date the application became abandoned, and July 2, 2008, the date a grantable petition and amendment correcting the omission was filed, the period of applicant delay is 540 days.

In view thereof, the patent term adjustment at the time of the mailing of the notice of allowance is 295 days (835 days of Office delay less 540 days of applicant delay).

The Office thanks applicants for their good faith and candor in bringing this to the attention of the Office.

The application is being forwarded to the Office of Data Management for issuance of the patent. The patent term adjustment indicated on the patent (as shown on the Issue Notification mailed about three weeks prior to patent issuance) will include any additional adjustment accrued both for Office delay in issuing the patent more than four months after payment of the issue fee and satisfaction of all outstanding requirements, and for the Office taking in excess of three years to issue the patent (to the extent that the three-year period does not overlap with periods already accorded).

Telephone inquiries specific to this decision should be directed to the undersigned at (571) 272-3231.

Douglas I. Wood
Senior Petitions Attorney
Office of Petitions

Encl: Updated PAIR Calculation

10/680,629	METHODS AND SYSTEMS FOR SAMPLING FREQUENCY OFFSET DETECTION, CORRECTION AND CONTROL FOR MIMO OFDM SYSTEMS	01-06-2011::10:37:52

Patent Term Adjustments

Patent Term Adjustment (PTA) for Application Number: 10/680,629

Filing or 371(c) Date:	10-06-2003	Overlapping Days Between {A and B} or {A and C}:	0
Issue Date of Patent:	-	Non-Overlapping USPTO Delays:	835
A Delays:	835	PTO Manual Adjustments:	-203
B Delays:	0	Applicant Delays:	337
C Delays:	0	Total PTA Adjustments:	295

Patent Term Adjustment History **Explanation Of Calculations**

Number	Date	Contents Description	PTO(Days)	APPL (Days)	Start
90	01-06-2011	Adjustment of PTA Calculation by PTO		540	0
89	01-06-2011	Adjustment of PTA Calculation by PTO	337		0
81	08-05-2010	Mail Notice of Allowance			0
80	08-03-2010	Issue Revision Completed			0
79	08-03-2010	Notice of Allowance Data Verification Completed			0
78	08-03-2010	Examiner's Amendment Communication			0
77	07-29-2010	Document Verification			0
76	07-28-2010	Notice of Allowability			0
75	06-10-2010	Date Forwarded to Examiner			0
74	06-03-2010	Response after Non-Final Action			0
73	04-14-2010	Mail Examiner Interview Summary (PTOL - 413)			0
72	04-07-2010	Examiner Interview Summary Record (PTOL - 413)			0
71	03-15-2010	Mail Non-Final Rejection	45		67
70	03-12-2010	Non-Final Rejection			0
69	09-18-2009	Information Disclosure Statement considered			0
68	01-15-2010	Date Forwarded to Examiner			0
67	09-29-2009	Response to Election / Restriction Filed			0
66	09-18-2009	Reference capture on IDS			0
65	09-18-2009	Information Disclosure Statement (IDS) Filed			0
64	09-18-2009	Information Disclosure Statement (IDS) Filed			0
63	09-04-2009	Mail Restriction Requirement			0
62	09-03-2009	Requirement for Restriction / Election			0
61	07-14-2009	Date Forwarded to Examiner			0
60	07-13-2009	Amendment Submitted/Entered with Filing of CPA/RCE			0
59	07-14-2009	Date Forwarded to Examiner			0
58	07-13-2009	Request for Continued Examination (RCE)			0
57	07-14-2009	Disposal for a RCE / CPA / R129			0
56	07-13-2009	Workflow - Request for RCE - Begin			0
55	04-20-2009	Mail Final Rejection (PTOL - 326)	3		52
54	04-20-2009	Final Rejection			0
53	03-19-2009	Date Forwarded to Examiner			0
52	12-17-2008	Response after Non-Final Action			0
51	03-13-2009	Change in Power of Attorney (May Include Associate POA)			0
50	03-12-2009	Correspondence Address Change			0
47	11-03-2008	Mail Non-Final Rejection	1		44
46	10-31-2008	Non-Final Rejection			0
45	10-31-2008	Date Forwarded to Examiner			0
44	07-02-2008	Response after Non-Final Action		337	34
43	10-21-2008	Mail Notice of Rescinded Abandonment			0
42	10-21-2008	Notice of Rescinded Abandonment in TCs			0
41	10-21-2008	Mail-Petition to Revive Application - Granted			0

40	10-21-2008	Petition to Revive Application - Granted		0
39	07-02-2008	Petition Entered		0
38	06-05-2008	Mail Abandonment for Failure to Respond to Office Action		0
37	06-04-2008	Aband. for Failure to Respond to O. A.		0
36	11-21-2007	Mail Notice of Informal or Non-Responsive Amendment		0
35	10-16-2007	Date Forwarded to Examiner		0
34.1	07-31-2007	Informal or Non-Responsive Amendment after Examiner Action		0
34	07-31-2007	Response after Non-Final Action		0
33	07-31-2007	Request for Extension of Time - Granted		0
32	08-09-2007	Correspondence Address Change		0
31	08-09-2007	Change in Power of Attorney (May Include Associate POA)		0
30	07-31-2007	Request for Extension of Time - Granted		0
29	01-31-2007	Mail Non-Final Rejection	786	-1
28	01-29-2007	Non-Final Rejection		0
27	03-11-2004	Information Disclosure Statement considered		0
26	11-14-2006	Case Docketed to Examiner in GAU		0
25	03-23-2006	Case Docketed to Examiner in GAU		0
24	03-21-2006	Case Docketed to Examiner in GAU		0
23	03-25-2005	Preliminary Amendment		0
22	03-25-2005	Preliminary Amendment		0
21	04-07-2005	Case Docketed to Examiner in GAU		0
20	04-07-2005	IFW TSS Processing by Tech Center Complete		0
19	02-17-2004	Oath or Declaration Filed (Including Supplemental)		0
18	04-07-2005	Case Docketed to Examiner in GAU		0
17	01-05-2005	Transfer Inquiry to GAU		0
16	05-12-2004	Reference capture on IDS		0
15.7	03-11-2004	Information Disclosure Statement (IDS) Filed		0
15	03-11-2004	Information Disclosure Statement (IDS) Filed		0
14	03-26-2004	Application Return from OIPE		0
13	03-26-2004	Application Is Now Complete		0
12	03-26-2004	Application Return TO OIPE		0
11	03-26-2004	Application Return from OIPE		0
10	03-26-2004	Application Return TO OIPE		0
9	03-26-2004	Application Dispatched from OIPE		0
8	03-26-2004	Application Is Now Complete		0
7	02-17-2004	Additional Application Filing Fees		0
6	02-17-2004	A statement by one or more inventors satisfying the requirement under 35 USC 115, Oath of the Applic		0
5	01-02-2004	Notice Mailed--Application Incomplete--Filing Date Assigned		0
4	12-18-2003	CASE CLASSIFIED BY OIPE		0
3	12-18-2003	Cleared by OIPE CSR		0
2	12-13-2003	IFW Scan & PACR Auto Security Review		0
1	10-06-2003	Initial Exam Team nn		0

Close Window

UNITED STATES PATENT AND TRADEMARK OFFICE

Commissioner for Patents
United States Patent and Trademark Office
P.O. Box 1450
Alexandria, VA 22313-1450
www.uspto.gov

Paper No.

MAILED
JUN 06 2011
OFFICE OF PETITIONS

FOLEY & LARDNER LLP
150 EAST GILMAN STREET
P.O. BOX 1497
MADISON WI 53701-1497

In re Patent No. 7,889,819	: DECISION ON REQUEST
Mody et.	: FOR
Issue Date: 02/15/2011	: RECONSIDERATION OF
Application No. 10/680,629	: PATENT TERM ADJUSTMENT
Filing or 371(c) Date: 10/06/2003	: and
Atty Docket No.	: NOTICE OF INTENT TO ISSUE
088245-6147	: CERTIFICATE OF CORRECTION

This is a decision on the REQUEST FOR RECONSIDERATION OF PATENT TERM ADJUSTMENT UNDER 37 C.F.R. § 1.705(d), filed on April 15, 2011, which is being treated as a petition under 37 CFR 1.705(d) requesting that the patent term adjustment indicated on the above-identified patent be corrected to indicate that the term of the above-identified patent is extended or adjusted by one thousand one hundred eighty-four (1184) days, and a petition under 37 CFR 1.183 to waive the rules inasmuch as a fee is required.

The petitions to revise the patent term adjustment indicated on the above-identified patent to indicate that the term of the above-identified patent is extended or adjusted by one thousand one hundred eighty-four (1184) days, and to waive the rules under 37 CFR 1.183 are **GRANTED**.

Patentees assert that the patent term adjustment of 1046 stated on the face of the issued patent is incorrect, and that the patent term adjustment should be increased by 138 days to 1184 days. Specifically, patentees aver that a 138 day period of reduction for applicant delay in connection with the decision on the petition to revive the application, mailed on October 21, 2008, was entered as a result of Office error.

Upon review, patentees are correct. On January 6, 2011, a decision on a petition under 37 CFR 1.705(b), was mailed, stating that the reduction in patent term adjustment for applicant delay was 540 days, including 448 days in connection with the filing, on July 31, 2007, of an amendment or other paper containing an omission, the subsequent abandonment of the application, the filing of a petition to revive the application and amendment correcting the omission on July 2, 2008, and the mailing on October 21, 2008, of a decision granting the petition to revive the application.

The patent term adjustment reflected on the issued patent, however, included an additional period of reduction of 138 days in connection with the decision on the petition to revive the application.

Upon review, the inclusion of an additional period of reduction of 138 days was the result of an error on the part of the Office in the patent term adjustment calculation at issuance of the patent. The 138 day period of reduction for applicant delay is not warranted and will be removed.

Under 37 CFR 1.183, the requirement for the fee under 37 CFR 1.705(d) is waived.
The fee set forth in 37 CFR 1.18(e) was submitted on initial petition filed on November 2, 2010. No additional fee is required. The fee submitted with the instant request will be credited to counsel's credit card.

The application is being forwarded to the Certificates of Correction Branch for issuance of a certificate of correction. The Office will issue a certificate of correction indicating that the term of the above-identified patent is extended or adjusted by **one thousand one hundred eighty-four (1184)** days.

Telephone inquiries specific to this matter should be directed to the undersigned at (571) 272-3231.

D Wood

Douglas I. Wood
Senior Petitions Attorney
Office of Petitions

Enclosure: Copy of DRAFT Certificate of Correction

UNITED STATES PATENT AND TRADEMARK OFFICE

CERTIFICATE OF CORRECTION

PATENT : 7,889,819 B2

DATED : **Feb. 15, 2011** **DRAFT**

INVENTOR(S) : Mody et al.

It is certified that error appears in the above-identified patent and that said Letters Patent is hereby corrected as shown below:

On the cover page,

[*] Notice: Subject to any disclaimer, the term of this patent is extended or adjusted under 35 USC 154(b) by 1046 days.

Delete the phrase "by 1046 days" and insert – by 1184 days--

PTO/SB/131 (01-10)
Approved for use through 02/28/2011. OMB 0651-0020
U.S. Patent and Trademark Office; U. S. DEPARTMENT OF COMMERCE
Under the Paperwork Reduction Act of 1995, no persons are required to respond to a collection of information unless it displays a valid OMB control number.

REQUEST FOR RECALCULATION OF PATENT TERM ADJUSTMENT IN VIEW OF *WYETH**

Attorney Docket Number: TI-36001	Patent Number: 7,659,918
Filing Date (or 371(b) or (f) Date): 10-08-2003	Issue Date: 02/09/2010
First Named Inventor: Arthur Monroe Turner	
Title: APPARATUS AND METHODS FOR ADJUSTING THE ROTATIONAL FREQUENCY OF A SCANNING DEVICE	

PATENTEE HEREBY REQUESTS RECALCULATION OF THE PATENT TERM ADJUSTMENT (PTA) UNDER 35 USC 154(b) INDICATED ON THE ABOVE-IDENTIFIED PATENT. THE PATENTEE'S SOLE BASIS FOR REQUESTING THE RECALCULATION IS THE USPTO'S PRE-*WYETH* INTERPRETATION OF 35 U.S.C. 154(b)(2)(A).

Note: This form is only for requesting a recalculation of PTA for patents issued before March 2, 2010, if the sole basis for requesting the recalculation is the USPTO's pre-*Wyeth* interpretation of 35 U.S.C. 154(b)(2)(A). See Instruction Sheet on page 2 for more information.

Patentees are reminded that to preserve the right to review in the United States District Court for the District of Columbia of the USPTO's patent term adjustment determination, a patentee must ensure that he or she also takes the steps required under 35 U.S.C. 154(b)(3) and (b)(4) and 37 CFR 1.705 in a timely manner.

**Wyeth v. Kappos*, No. 2009-1120 (Fed. Cir., Jan. 7, 2010).

Signature / Wade J. Brady III /	Date August 2, 2010
Name (Print/Typed) Wade J. Brady III	Registration Number 32,080

***Note**: Signatures of all the inventors or assignees of record of the entire interest or their representative(s) are required in accordance with 37 CFR 1.33 and 11.18. Please see 37 CFR 1.4(d) for the form of the signature. If necessary, submit multiple forms for more than one signature, see below**.*

☑ *Total of 1 forms are submitted.

The information is required to obtain or retain a benefit by the public which is to file (and by the USPTO to process) an application. Confidentiality is governed by 35 U.S.C. 122 and 37 CFR 1.11 and 1.14. This collection is estimated to take 12 hours to complete, including gathering, preparing, and submitting the completed application form to the USPTO. Time will vary depending upon the individual case. Any comments on the amount of time you require to complete this form and/or suggestions for reducing this burden, should be sent to the Chief Information Officer, U.S. Patent and Trademark Office, U.S. Department of Commerce, P.O. Box 1450, Alexandria, VA 22313-1450. DO NOT SEND FEES OR COMPLETED FORMS TO THIS ADDRESS. **SEND TO: Commissioner for Patents, P.O. Box 1450, Alexandria, VA 22313-1450.**

If you need assistance in completing the form, call 1-800-PTO-9199 and select option 2.

UNITED STATES PATENT AND TRADEMARK OFFICE

UNITED STATES DEPARTMENT OF COMMERCE
United States Patent and Trademark Office
Address: COMMISSIONER FOR PATENTS
P.O. Box 1450
Alexandria, Virginia 22313-1450
www.uspto.gov

TEXAS INSTRUMENTS INCORPORATED
P O BOX 655474, M/S 3999
DALLAS, TX 75265

Mail Date: 08/11/2010

Applicant	: Arthur Monroe Turner	: DECISION ON REQUEST FOR
Patent Number	: 7659918	: RECALCULATION of PATENT
Issue Date	: 02/09/2010	: TERM ADJUSTMENT IN VIEW
Application No	: 10/680,928	: OF WYETH AND NOTICE OF INTENT TO
Filed	: 10/08/2003	: ISSUE CERTIFICATE OF CORRECTION
		:

The Request for Recalculation is **GRANTED** to the extent indicated.

The patent term adjustment has been determined to be **1643** days. The USPTO will *sua sponte* issue a certificate of correction reflecting the amount of PTA days determined by the recalculation.

Prior to the issuance of the certificate of correction, the USPTO will afford patentee an opportunity to be heard and request reconsideration. Accordingly, patentee has **one month or thirty (30) days**, whichever is longer, to file a request for reconsideration of this patent term adjustment calculation. See 35 U.S.C. 154(b)(3)(B)(ii) and 37 CFR 1.322(a)(4). No extensions of time will be granted under 37 CFR 1.136.

Patentee should use document code PET.OP if electronically filing a request for reconsideration of this patent term adjustment calculation. The patentee must also include the information required by 37 CFR 1.705(b)(2) and the fee required by 37 CFR 1.18(e). If patentee does not file a timely request for reconsideration of this patent term adjustment calculation including the information required by 37 CFR 1.705(b)(2) and the fee required by 37 CFR 1.18(e), the USPTO will issue a certificate of correction reflecting the PTA determination noted above.

Patentee should be aware that in order to preserve the right to review in the United States District Court for the District of Columbia of the USPTO patent term adjustment determination, patentee must ensure that he or she also take the steps required under 35 U.S.C. 154(b)(4)(A) in a timely manner. Nothing in the request for recalculation should be construed as providing an alternative time frame for commencing a civil action under 35 U.S.C. 154(b)(4)(A).

Any questions concerning this decision should be directed to the Office of Patent Legal Administration at 571-272-7702.

SPE RESPONSE FOR CERTIFICATE OF CORRECTION

PAPER NO.:

DATE : 9/10/10

TO SPE OF : ART UNIT: 3714 Attn: TORIMIRO ADETOKUNBO O

SUBJECT : Request for Certificate of Correction for Appl. No.: 10/681075 Patent No.: 7771271

Please respond to this request for a certificate of correction within 7 days.

FOR IFW FILES:

Please review the requested changes/corrections as shown in the **COCIN** document(s) in the IFW application image. No new matter should be introduced, nor should the scope or meaning of the claims be changed.
Please complete the response (see below) and forward the completed response to scanning using document code **COCX**.

FOR PAPER FILES:

Please review the requested changes/corrections as shown in the attached certificate of correction. Please complete this form (see below) and forward it with the file to:

Certificates of Correction Branch (CofC)
Randolph Square Building (RSQ)
2800 South Randolph Street, Suite 9XXXX
Arlington, VA 22206
PALM Location 7580

Tasneem Siddiqui

Certificates of Correction Branch
703-756-1593

Thank You for Your Assistance

The request for issuing the above-identified correction(s) is hereby:
Note your decision on the appropriate box.

X	**Approved**	**All** changes apply.
☐	**Approved in Part**	Specify below which changes **do not** apply.
☐	**Denied**	State the reasons for denial below.

Comments: _____

_____

_____

SPE **Art Unit**

/Adetokunbo O Torimiro/ Examiner, Art Unit 3714

UNITED STATES PATENT AND TRADEMARK OFFICE

Commissioner for Patents
United States Patent and Trademark Office
P.O. Box 1450
Alexandria, VA 22313-1450
www.uspto.gov

Paper No.

Glenn Patent Group
3475 Edison Way, Suite L
Menlo Park CA 94025

MAILED
DEC 30 2011
OFFICE OF PETITIONS

In re Application of :
Liljeryd et al. :
Application No. 10/681,105 :
Patent No.: 7,328,162 :
Filed: October 9, 2003 :
Issued: February 5, 2008 :
Title: SOURCE CODING :
ENHANCEMENT USING SPECTRAL-BAND :
REPLICATION :

DECISION ON PETITION
PURSUANT TO
37 C.F.R. § 1.28(c)

This is a notice regarding your request for acceptance of a fee deficiency submission pursuant to 37 C.F.R. § 1.28, received on December 13, 2011. On September 1, 1998, the Court of Appeals for the Federal Circuit held that 37 C.F.R. § 1.28(c) is the sole provision governing the time for correction of the erroneous payment of the issue fee as a small entity. See DH Technology v. Synergystex International, Inc. 154 F.3d 1333, 47 USPQ2d 1865 (Fed. Cir. Sept. 1, 1998).

The Office no longer investigates or rejects original or reissue applications under 37 C.F.R. § 1.56. 1098 Off. Gaz. Pat. Office 502 (January 3, 1989). Therefore, nothing in this notice is intended to imply that an investigation was done.

Petitioner has identified the particular type of fee that was erroneously paid as a small entity, when the small entity fee was actually paid, the small entity fee that was actually paid, the deficiency owed amount, and the total deficiency payment owed.

The deficiency payment in the amount of $640 has been received.

Your fee deficiency submission pursuant to 37 C.F.R. § 1.28(c) is hereby accepted. The petition is **GRANTED** accordingly.

This patent is no longer entitled to small entity status. Accordingly, all future fees paid in this patent must be paid at the large entity rate.

Telephone inquiries regarding *this decision* should be directed to the undersigned at (571) 272-3225.[1]

Paul Shanoski
Senior Attorney
Office of Petitions

1 Petitioner will note that all practice before the Office should be in writing, and the action of the Office will be based exclusively on the written record in the Office. See 37 C.F.R. § 1.2. As such, Petitioner is reminded that no telephone discussion may be controlling or considered authority for Petitioner's further action(s).

UNITED STATES PATENT AND TRADEMARK OFFICE

Commissioner for Patents
United States Patent and Trademark Office
P.O. Box 1450
Alexandria, VA 22313-1450
www.uspto.gov

In re Patent No. 7107626
Issue Date: September 19,2006
Application No. 10681616
Filed: October 8,2003
Attorney Docket No. VSAA-40002

:
:DECISION GRANTING PETITION
:UNDER 37 CFR 1.378(c)
:

This is a decision on the electronic petition, filed June 21,2011 ,under 37 CFR 1.378(c) to accept the unintentionally delayed payment of the 3.5 year maintenance fee for the above-identified patent.

The petition is **GRANTED**.

The maintenance fee is accepted, and the above-identified patent reinstated as of June 21,2011 .
This decision also constitutes notice that the fee has been accepted. An electronic copy of the petition and this decision has been created as an entry in the Image File Wrapper. Nevertheless, petitioner should print and retain an independent copy.

Telephone inquiries related to this electronic decision should be directed to the Electronic Business Center at 1-866-217-9197.

PTO/SB/66 (03-09)
Approved for use through 03/31/2012. OMB 0651-0016
U.S. Patent and Trademark Office: U.S. DEPARTMENT OF COMMERCE
Under the Paperwork Reduction Act of 1995, no persons are required to respond to a collection of information unless it displays valid OMB control number.

PETITION TO ACCEPT UNINTENTIONALLY DELAYED PAYMENT OF MAINTENANCE FEE IN AN EXPIRED PATENT (37 CFR 1.378(c))

Patent Number	Issue Date (YYYY-MM-DD)	Application Number	Filing Date (YYYY-MM-DD)	Docket Number (if applicable)
7107626	2006-09-19	10681616	2003-10-08	LIB-40002

CAUTION: Maintenance fee (and surcharge, if any) payment must correctly identify: (1) the patent number and (2) the application number of the actual U.S. application leading to issuance of that patent to ensure the fee(s) is/are associated with the correct patent. 37 CFR 1.366(c) and (d).

SMALL ENTITY
☒ Patentee claims, or has previously claimed, small entity status. See 37 CFR 1.27.

LOSS OF ENTITLEMENT TO SMALL ENTITY STATUS
☐ Patentee is no longer entitled to small entity status. See 37 CFR 1.27(g)

NOT Small Entity		Small Entity	
Fee	Code	Fee	Code
○ 3 ½ year	(1551)	● 3 ½ year	(2551)
○ 7 ½ year	(1552)	○ 7 ½ year	(2552)
○ 11 ½ year	(1553)	○ 11 ½ year	(2553)

SURCHARGE
The surcharge required by 37 CFR 1.20(i)(2) (Fee Code 1558) must be paid as a condition of accepting unintentionally delayed payment of the maintenance fee.

MAINTENANCE FEE (37 CFR 1.20(e)-(g))
The appropriate maintenance fee must be submitted with this petition.

STATEMENT
THE UNDERSIGNED CERTIFIES THAT THE DELAY IN PAYMENT OF THE MAINTENANCE FEE TO THIS PATENT WAS UNINTENTIONAL

PETITIONER(S) REQUEST THAT THE DELAYED PAYMENT OF THE MAINTENANCE FEE BE ACCEPTED AND THE PATENT REINSTATED

THIS PORTION MUST BE COMPLETED BY THE SIGNATORY OR SIGNATORIES

37 CFR 1.378(d) states: "Any petition under this section must be signed by an attorney or agent registered to practice before the Patent and Trademark Office, or by the patentee, the assignee, or other party in interest."

I certify, in accordance with 37 CFR 1.4(d)(4) that I am

- ● An attorney or agent registered to practice before the Patent and Trademark Office
- ○ A sole patentee
- ○ A joint patentee; I certify that I am authorized to sign this submission on behalf of all the other patentees.
- ○ A joint patentee; all of whom are signing this e-petition
- ○ The assignee of record of the entire interest

Under the Paperwork Reduction Act of 1995, no persons are required to respond to a collection of information unless it displays valid OMB control number.

Patent Practitioner			
A signature of the applicant or representative is required in accordance with 37 CFR 1.33 and 10.18. Please see 37 CFR 1.4(d) for the form of the signature			
Signature	/TWT/	Date (YYYY-MM-DD)	2011-06-21
Name	Thomas W. Tolpin	Registration Number	27600

This collection of information is required by 37 CFR 1.378(c). The information is required to obtain or retain a benefit by the public which is to file (and by the USPTO to process) an application. Confidentiality is governed by 35 U.S.C. 122 and 37 CFR 1.11 and 1.14. This collection is estimated to take 1 hour to complete, including gathering, preparing, and submitting the completed application form to the USPTO. Time will vary depending upon the individual case. Any comments on the amount of time you require to complete this form and/ or suggestions for reducing this burden, should be sent to the Chief Information Officer, U.S. Patent and Trademark Office, U.S. Department of Commerce, P.O. Box 1450, Alexandria, VA 22313-1450. DO NOT SEND FEES OR COMPLETED FORMS TO THIS ADDRESS. **This form can only be used when in conjunction with EFS-Web. If this form is mailed to the USPTO, it may cause delays in reinstating the patent.**

Privacy Act Statement

The Privacy Act of 1974 (P.L. 93-579) requires that you be given certain information in connection with your submission of the attached form related to a patent application or patent. Accordingly, pursuant to the requirements of the Act, please be advised that: (1) the general authority for the collection of this information is 35 U.S.C. 2(b)(2); (2) furnishing of the information solicited is voluntary; and (3) the principal purpose for which the information is used by the U.S. Patent and Trademark Office is to process and/or examine your submission related to a patent application or patent. If you do not furnish the requested information, the U.S. Patent and Trademark Office may not be able to process and/or examine your submission, which may result in termination of proceedings or abandonment of the application or expiration of the patent.

The information provided by you in this form will be subject to the following routine uses:

1. The information on this form will be treated confidentially to the extent allowed under the Freedom of Information Act (5 U.S.C. 552) and the Privacy Act (5 U.S.C. 552a). Records from this system of records may be disclosed to the Department of Justice to determine whether the Freedom of Information Act requires disclosure of these records.

2. A record from this system of records may be disclosed, as a routine use, in the course of presenting evidence to a court, magistrate, or administrative tribunal, including disclosures to opposing counsel in the course of settlement negotiations.

3. A record in this system of records may be disclosed, as a routine use, to a Member of Congress submitting a request involving an individual, to whom the record pertains, when the individual has requested assistance from the Member with respect to the subject matter of the record.

4. A record in this system of records may be disclosed, as a routine use, to a contractor of the Agency having need for the information in order to perform a contract. Recipients of information shall be required to comply with the requirements of the Privacy Act of 1974, as amended, pursuant to 5 U.S.C. 552a(m).

5. A record related to an International Application filed under the Patent Cooperation Treaty in this system of records may be disclosed, as a routine use, to the International Bureau of the World Intellectual Property Organization, pursuant to the Patent Cooperation Treaty.

6. A record in this system of records may be disclosed, as a routine use, to another federal agency for purposes of National Security review (35 U.S.C. 181) and for review pursuant to the Atomic Energy Act (42 U.S.C. 218(c)).

7. A record from this system of records may be disclosed, as a routine use, to the Administrator, General Services, or his/her designee, during an inspection of records conducted by GSA as part of that agency's responsibility to recommend improvements in records management practices and programs, under authority of 44 U.S.C. 2904 and 2906. Such disclosure shall be made in accordance with the GSA regulations governing inspection of records for this purpose, and any other relevant (i.e., GSA or Commerce) directive. Such disclosure shall not be used to make determinations about individuals.

8. A record from this system of records may be disclosed, as a routine use, to the public after either publication of the application pursuant to 35 U.S.C. 122(b) or issuance of a patent pursuant to 35 U.S.C. 151. Further, a record may be disclosed, subject to the limitations of 37 CFR 1.14, as a routine use, to the public if the record was filed in an application which became abandoned or in which the proceedings were terminated and which application is referenced by either a published application, an application open to public inspections or an issued patent.

9. A record from this system of records may be disclosed, as a routine use, to a Federal, State, or local law enforcement agency, if the USPTO becomes aware of a violation or potential violation of law or regulation.

UNITED STATES PATENT AND TRADEMARK OFFICE

Commissioner for Patents
United States Patent and Trademark Office
P.O. Box 1450
Alexandria, VA 22313-1450
www.uspto.gov

PERKINS COIE LLP
PATENT-SEA
P.O. BOX 1247
SEATTLE WA 98111-1247

MAILED
FEB 25 2011
OFFICE OF PETITIONS

In re Patent No. 7,233,950	:	
Issue Date: June 19, 2007	:	
Application No. 10/681,621	:	NOTICE
Filed: October 7, 2003	:	
Attorney Docket No. JOS-101/DIV	:	

This is a notice regarding your request for acceptance of a fee deficiency submission under 37 CFR 1.28 filed November 1, 2010.

The Office no longer investigates or rejects original or reissue patent under 37 CFR 1.56. **1098 Off. Gaz. Pat. Office 502 (January 3, 1989)**. Therefore, nothing in this Notice is intended to imply that an investigation was done.

Your fee deficiency submission under 37 CFR 1.28 is hereby **ACCEPTED**.

This patent is no longer entitled to small entity status. Accordingly, all future fees paid in this patent must be paid at the large entity rate.

Inquiries related to this communication should be directed to the undersigned at (571) 272-3208.

/KOC/
Karen Creasy
Petitions Examiner
Office of Petitions

UNITED STATES PATENT AND TRADEMARK OFFICE

Commissioner for Patents
United States Patent and Trademark Office
P.O. Box 1450
Alexandria, VA 22313-1450
www.uspto.gov

Decision Date : June 7,2011

In re Application of :

David Reuter

Application No : 10681638

Filed : 08-Oct-2003

Attorney Docket No : DP-309595 7500/250

DECISION ON PETITION

UNDER CFR 1.137(b)

This is an electronic decision on the petition under 37 CFR 1.137(b), filed June 7,2011 , to revive the above-identified application.

The petition is **GRANTED.**

The above-identified application became abandoned for failure to reply in a timely manner to the Notice of Allowance and Issue Fee(s) Due. The date of abandonment is the day after the expiration date of the period set for reply in the Notice.

The electronic petition satisfies the conditions for revival pursuant to the provisions of 37 CFR 1.137(b) in that (1) the reply in the form of payment of the Issue Fee and the Publication Fee (if necessary); (2) the petition fee as set forth in 37 CFR 1.17 (m); (3) the drawing correction and/or other deficiencies (if necessary); and (4) the required statement of unintentional delay have been received. Accordingly, the Issue Fee payment is accepted as having been unintentionally delayed.

It is not apparent whether the person signing the statement of unintentional delay was in a position to have firsthand or direct knowledge of the facts and circumstances of the delay at issue. Nevertheless, such statement is being treated as having been made as the result of a reasonable inquiry into the facts and circumstances of such delay. See 37 CFR 10.18(b) and Changes to Patent Practice and Procedure; Final Rule Notice, 62 Fed. Reg. 53131, 53178 (October 10, 1997), 1203 Off. Gaz. Pat. Office 63, 103 (October 21, 1997). In the event that such an inquiry has not been made, petitioner must make such an inquiry. If such inquiry results in the discovery that it is not correct that the entire delay in filing the required reply from the due date for the reply until the filing of a grantable petition pursuant to 37 CFR 1.137(b) was unintentional, petitioner must notify the Office.

Telephone inquiries concerning this decision should be directed to the Patent Electronic Business Center (EBC) at 866-217-9197.

This application file is being directed to the Office of Data Management.

Office of Petitions

Doc Code: PET.AUTO Document Description: Petition automatically granted by EFS-Web	PTO/SB/64 U.S. Patent and Trademark Office Department of Commerce

Electronic Petition Request	PETITION FOR REVIVAL OF AN APPLICATION FOR PATENT ABANDONED UNINTENTIONALLY UNDER 37 CFR 1.137(b)
Application Number	10681638
Filing Date	08-Oct-2003
First Named Inventor	David Reuter
Art Unit	3657
Examiner Name	PAMELA RODRIGUEZ
Attorney Docket Number	DP-309595 7500/250
Title	FAILSAFE OPERATION OF A HYBRID BRAKE SYSTEM FOR A VEHICLE

The above-identified application became abandoned for failure to file a timely and proper reply to a notice or action by the United States Patent and Trademark Office. The date of abandonment is the day after the expiration date of the period set for reply in the office notice or action plus any extensions of time actually obtained.

APPLICANT HEREBY PETITIONS FOR REVIVAL OF THIS APPLICATION

NOTE: A grantable petition requires the following items:
(1) Petition fee;
(2) Reply and/or issue fee;
(3) Terminal disclaimer with disclaimer fee – required for all utility and plant applications filed before June 8, 1995; and for all design applications;
(4) Statement that the entire delay was unintentional.

Petition fee
The petition fee under 37CFR 1.17(m) is attached.

☐ Applicant claims SMALL ENTITY status. See 37 CFR 1.27.

☐ Applicant is no longer claiming SMALL ENTITY status. See 37 CFR 1.27(g)(2).

☐ Applicant(s) status remains as SMALL ENTITY.

☒ Applicant(s) status remains as other than SMALL ENTITY.

Issue Fee and Publication Fee :

Issue Fee and Publication Fee must accompany ePetition.

☒ Issue Fee Transmittal is attached

Drawing corrections and/ or other deficiencies.

- (●) Drawing corrections and/ or other deficiencies are not required
- ( ) I certify, in accordance with 37 CFR 1.4.(D)(4), that drawing corrections and/ or other deficiencies have previously been filed on
- ( ) Drawing corrections and/ or other deficiencies are attached.
- [x] STATEMENT: The entire delay in filing the required reply from the due date for the required reply until the filing of a grantable petition under 37 CFR 1.137(b) was unintentional.

THIS PORTION MUST BE COMPLETED BY THE SIGNATORY OR SIGNATORIES

I certify, in accordance with 37 CFR 1.4(d)(4) that I am:

- ( ) An attorney or agent registered to practice before the Patent and Trademark Office who has been given power of attorney in this application.
- (●) An attorney or agent registered to practice before the Patent and Trademark Office, acting in a representative capacity.
- ( ) A sole inventor
- ( ) A joint inventor; I certify that I am authorized to sign this submission on behalf of all of the inventors.
- ( ) A joint inventor; all of whom are signing this e-petition.
- ( ) The assignee of record of the entire interest that has properly made itself of record pursuant to 37 CFR 3.71.

Signature	/William H. Honaker/
Name	William H. Honaker
Registration Number	31623

SPE RESPONSE FOR CERTIFICATE OF CORRECTION

Paper No.: ——

DATE : 2/17/2011

TO SPE OF : ART UNIT 1652

SUBJECT : Request for Certificate of Correction for Appl. No.: 10/681690 Patent No.: 7300778 B2

CofC mailroom date: 2/4/2008

Please respond to this request for a certificate of correction within 7 days.

FOR IFW FILES: "The Title"

Please review the requested changes/corrections as shown in the **COCIN** document(s) in the IFW application image. No new matter should be introduced, nor should the scope or meaning of the claims be changed.

Please complete the response (see below) and forward the completed response to scanning using document code **COCX**.

FOR PAPER FILES:

Please review the requested changes/corrections as shown in the attached certificate of correction. Please complete this form (see below) and forward it with the file to:

Certificates of Correction Branch (CofC)
Randolph Square – 9D10-A
Palm Location 7580

Virginia Tolbert
Certificates of Correction Branch
571-272-0460

Thank You For Your Assistance

The request for issuing the above-identified correction(s) is hereby:
Note your decision on the appropriate box.

- ☒ **Approved** — **All** changes apply.
- ☐ **Approved in Part** — Specify below which changes **do not** apply.
- ☐ **Denied** — State the reasons for denial below.

Comments: _____

ROBERT MONDESI
SUPERVISORY PATENT EXAMINER

SPE

1652
Art Unit

PTO/SB/66 (03-09)
Approved for use through 03/31/2012. OMB 0651-0016
U.S. Patent and Trademark Office: U.S. DEPARTMENT OF COMMERCE
Under the Paperwork Reduction Act of 1995, no persons are required to respond to a collection of information unless it displays valid OMB control number.

PETITION TO ACCEPT UNINTENTIONALLY DELAYED PAYMENT OF MAINTENANCE FEE IN AN EXPIRED PATENT (37 CFR 1.378(c))

Patent Number	Issue Date (YYYY-MM-DD)	Application Number	Filing Date (YYYY-MM-DD)	Docket Number (if applicable)
7080162	2006-07-18	10682572	2003-10-08	42P12213C

CAUTION: Maintenance fee (and surcharge, if any) payment must correctly identify: (1) the patent number and (2) the application number of the actual U.S. application leading to issuance of that patent to ensure the fee(s) is/are associated with the correct patent. 37 CFR 1.366(c) and (d).

SMALL ENTITY
☐ Patentee claims, or has previously claimed, small entity status. See 37 CFR 1.27.

LOSS OF ENTITLEMENT TO SMALL ENTITY STATUS
☐ Patentee is no longer entitled to small entity status. See 37 CFR 1.27(g)

NOT Small Entity		Small Entity	
Fee	Code	Fee	Code
◉ 3 ½ year	(1551)	◯ 3 ½ year	(2551)
◯ 7 ½ year	(1552)	◯ 7 ½ year	(2552)
◯ 11 ½ year	(1553)	◯ 11 ½ year	(2553)

SURCHARGE
The surcharge required by 37 CFR 1.20(i)(2) (Fee Code 1558) must be paid as a condition of accepting unintentionally delayed payment of the maintenance fee.

MAINTENANCE FEE (37 CFR 1.20(e)-(g))
The appropriate maintenance fee must be submitted with this petition.

STATEMENT
THE UNDERSIGNED CERTIFIES THAT THE DELAY IN PAYMENT OF THE MAINTENANCE FEE TO THIS PATENT WAS UNINTENTIONAL

PETITIONER(S) REQUEST THAT THE DELAYED PAYMENT OF THE MAINTENANCE FEE BE ACCEPTED AND THE PATENT REINSTATED

THIS PORTION MUST BE COMPLETED BY THE SIGNATORY OR SIGNATORIES

37 CFR 1.378(d) states: "Any petition under this section must be signed by an attorney or agent registered to practice before the Patent and Trademark Office, or by the patentee, the assignee, or other party in interest."

I certify, in accordance with 37 CFR 1.4(d)(4) that I am

◉ An attorney or agent registered to practice before the Patent and Trademark Office

◯ A sole patentee

◯ A joint patentee; I certify that I am authorized to sign this submission on behalf of all the other patentees.

◯ A joint patentee; all of whom are signing this e-petition

◯ The assignee of record of the entire interest

Under the Paperwork Reduction Act of 1995, no persons are required to respond to a collection of information unless it displays valid OMB control number.

Patent Practitioner			
A signature of the applicant or representative is required in accordance with 37 CFR 1.33 and 10.18. Please see 37 CFR 1.4(d) for the form of the signature			
Signature	/Kendal M. Sheets/	Date (YYYY-MM-DD)	2010-10-13
Name	Kendal M. Sheets	Registration Number	47077

This collection of information is required by 37 CFR 1.378(c). The information is required to obtain or retain a benefit by the public which is to file (and by the USPTO to process) an application. Confidentiality is governed by 35 U.S.C. 122 and 37 CFR 1.11 and 1.14. This collection is estimated to take 1 hour to complete, including gathering, preparing, and submitting the completed application form to the USPTO. Time will vary depending upon the individual case. Any comments on the amount of time you require to complete this form and/ or suggestions for reducing this burden, should be sent to the Chief Information Officer, U.S. Patent and Trademark Office, U.S. Department of Commerce, P.O. Box 1450, Alexandria, VA 22313-1450. DO NOT SEND FEES OR COMPLETED FORMS TO THIS ADDRESS. **This form can only be used when in conjunction with EFS-Web. If this form is mailed to the USPTO, it may cause delays in reinstating the patent.**

Privacy Act Statement

The Privacy Act of 1974 (P.L. 93-579) requires that you be given certain information in connection with your submission of the attached form related to a patent application or patent. Accordingly, pursuant to the requirements of the Act, please be advised that: (1) the general authority for the collection of this information is 35 U.S.C. 2(b)(2); (2) furnishing of the information solicited is voluntary; and (3) the principal purpose for which the information is used by the U.S. Patent and Trademark Office is to process and/or examine your submission related to a patent application or patent. If you do not furnish the requested information, the U.S. Patent and Trademark Office may not be able to process and/or examine your submission, which may result in termination of proceedings or abandonment of the application or expiration of the patent.

The information provided by you in this form will be subject to the following routine uses:

1. The information on this form will be treated confidentially to the extent allowed under the Freedom of Information Act (5 U.S.C. 552) and the Privacy Act (5 U.S.C. 552a). Records from this system of records may be disclosed to the Department of Justice to determine whether the Freedom of Information Act requires disclosure of these records.

2. A record from this system of records may be disclosed, as a routine use, in the course of presenting evidence to a court, magistrate, or administrative tribunal, including disclosures to opposing counsel in the course of settlement negotiations.

3. A record in this system of records may be disclosed, as a routine use, to a Member of Congress submitting a request involving an individual, to whom the record pertains, when the individual has requested assistance from the Member with respect to the subject matter of the record.

4. A record in this system of records may be disclosed, as a routine use, to a contractor of the Agency having need for the information in order to perform a contract. Recipients of information shall be required to comply with the requirements of the Privacy Act of 1974, as amended, pursuant to 5 U.S.C. 552a(m).

5. A record related to an International Application filed under the Patent Cooperation Treaty in this system of records may be disclosed, as a routine use, to the International Bureau of the World Intellectual Property Organization, pursuant to the Patent Cooperation Treaty.

6. A record in this system of records may be disclosed, as a routine use, to another federal agency for purposes of National Security review (35 U.S.C. 181) and for review pursuant to the Atomic Energy Act (42 U.S.C. 218(c)).

7. A record from this system of records may be disclosed, as a routine use, to the Administrator, General Services, or his/her designee, during an inspection of records conducted by GSA as part of that agency's responsibility to recommend improvements in records management practices and programs, under authority of 44 U.S.C. 2904 and 2906. Such disclosure shall be made in accordance with the GSA regulations governing inspection of records for this purpose, and any other relevant (i.e., GSA or Commerce) directive. Such disclosure shall not be used to make determinations about individuals.

8. A record from this system of records may be disclosed, as a routine use, to the public after either publication of the application pursuant to 35 U.S.C. 122(b) or issuance of a patent pursuant to 35 U.S.C. 151. Further, a record may be disclosed, subject to the limitations of 37 CFR 1.14, as a routine use, to the public if the record was filed in an application which became abandoned or in which the proceedings were terminated and which application is referenced by either a published application, an application open to public inspections or an issued patent.

9. A record from this system of records may be disclosed, as a routine use, to a Federal, State, or local law enforcement agency, if the USPTO becomes aware of a violation or potential violation of law or regulation.

UNITED STATES PATENT AND TRADEMARK OFFICE

Commissioner for Patents
United States Patent and Trademark Office
P.O. Box 1450
Alexandria, VA 22313-1450
www.uspto.gov

In re Patent No. 7080162
Issue Date: July 18,2006
Application No. 10682572
Filed: October 8,2003
Attorney Docket No. 42P12213C

:
:DECISION GRANTING PETITION
:UNDER 37 CFR 1.378(c)
:

This is a decision on the electronic petition, filed October 14,2010 ,under 37 CFR 1.378(c) to accept the unintentionally delayed payment of the 3.5 year maintenance fee for the above-identified patent.

The petition is **GRANTED**.

The maintenance fee is accepted, and the above-identified patent reinstated as of October 14,2010 .
This decision also constitutes notice that the fee has been accepted. An electronic copy of the petition and this decision has been created as an entry in the Image File Wrapper. Nevertheless, petitioner should print and retain an independent copy.

Telephone inquiries related to this electronic decision should be directed to the Electronic Business Center at 1-866-217-9197.

UNITED STATES PATENT AND TRADEMARK OFFICE

UNITED STATES DEPARTMENT OF COMMERCE
United States Patent and Trademark Office
Address: COMMISSIONER FOR PATENTS
P.O. Box 1450
Alexandria, Virginia 22313-1450
www.uspto.gov

APPLICATION NO.	FILING DATE	FIRST NAMED INVENTOR	ATTORNEY DOCKET NO.	CONFIRMATION NO.
10/682,584	10/09/2003	Sinan Tas	T80.2H-11341-US01	9769

7590 01/26/2011
VIDAS, ARRETT & STEINKRAUS, P.A.
SUITE 400, 6640 SHADY OAK ROAD
EDEN PRAIRIE, MN 55344

EXAMINER
ANDERSON, JAMES D

ART UNIT	PAPER NUMBER
1614	

MAIL DATE	DELIVERY MODE
01/26/2011	PAPER

ACKNOWLEDGEMENT OF REQUEST

Notice of Allowance/Allowability Mailed

The request to print a color drawing reference as the first paragraph in the portion of the specification containing a brief description of the drawings as required by 37 CFR 1.84 and MPEP § 608.02 has been received by the United States Patent and Trademark Office and will be entered into the specification.

571-272-4200 or 1-888-786-0101
Application Assistance Unit
Office of Data Management

FORM PTOM327-5 (Rev. 02/08)

UNITED STATES PATENT AND TRADEMARK OFFICE

Commissioner for Patents
United States Patent and Trademark Office
P.O. Box 1450
Alexandria, VA 22313-1450
www.uspto.gov

January 25, 2011

VIDAS, ARRETT & STEINKRAUS, P.A.
SUITE 400, 6640 SHADY OAK ROAD
EDEN PRAIRIE MN 55344

In re Application of	: **DECISION ON PETITION**
Tas, Sinan et al,	
Application No: **10/682584**	: **ACCEPTANCE OF COLOR**
Filed: **10/09/2003**	: **DRAWINGS**
Attorney Docket: **T80.2H-11341-US01**	:

This is a decision on the Petition to Accept Color Drawings under 37 C.F.R 1.84 (a) (2), received in the United States Patent and Trademark Office (USPTO) October 9, 2003.

The petition is **GRANTED**.

A grantable petition under 37 C.F.R. 1.84(a) (2) must be accompanied by the following.

1. The fee set forth under 37 C.F.R. 1.17(h),
2. Three (3) sets of the color drawings in question, or (1) set if filed via EFS, and
3. The specification containing the following language as the first paragraph in that portion of the specification relating to the brief description of the drawings.

   "The file of this patent contains at least one drawing executed in color. Copies of this patent with color drawing(s) will be provided by the Patent and Trademark Office upon request and payment of the necessary fee."

The petition was accompanied by all of the required fees and drawings. The specification contains the appropriate language. Therefore, the petition is GRANTED.

Telephone inquires relating to this decision may be directed to the undersigned in the Office of Data Management at 571-272-4200.

/Bernadette Queen/
Quality Control Specialist
Office of Data Management
Publications Branch

UNITED STATES PATENT AND TRADEMARK OFFICE

Commissioner for Patents
United States Patent and Trademark Office
P.O. Box 1450
Alexandria, VA 22313-1450
www.uspto.gov

GTC LAW GROUP LLP & AFFILIATES
C/O CPA GLOBAL
P.O. BOX 52050
MINNEAPOLIS, MN 55402

MAILED
MAY 17 2011
OFFICE OF PETITIONS

In re Patent No. 7,285,090	:	
Issue Date: October 23, 2007	:	
Application No. 10/682,759	:	NOTICE
Filed: October 9, 2003	:	
Attorney Docket No. I/O-US		

This is a notice regarding your request for acceptance of a fee deficiency submission under 37 CFR 1.28. On September 1, 1998, the Court of Appeals for the Federal Circuit held that 37 CFR 1.28(c) is the sole provision governing the time for correction of the erroneous payment of the issue fee as a small entity. **See DH Technology v. Synergystex International, Inc. 154 F.3d 1333, 47 USPQ2d 1865 (Fed. Cir. Sept. 1, 1998).**

The Office no longer investigates or rejects original or reissue applications under 37 CFR 1.56. **1098 Off. Gaz. Pat. Office 502 (January 3, 1989).** Therefore, nothing in this Notice is intended to imply that an investigation was done.

Your fee deficiency submission under 37 CFR 1.28 is hereby **ACCEPTED**.

The file does not indicate a change of address has been submitted, although the address given on the petition differs from the address of record. If appropriate, a change of address should be filed in accordance with MPEP 601.03. A courtesy copy of this decision is being mailed to the address given on the petition; however, the Office will mail all future correspondence solely to the address of record.

Inquiries related to this communication should be directed to Irvin Dingle at (571) 272-3210.

Irvin Dingle
Petitions Examiner
Office of Petitions

cc: John A. Monocello, III
GTC Law Group LLP & Affiliates
P.O Box 113237
Pittsburgh, PA 15241

UNITED STATES PATENT AND TRADEMARK OFFICE

Commissioner for Patents
United States Patent and Trademark Office
P.O. Box 1450
Alexandria, VA 22313-1450
www.uspto.gov

Paper No.

MAILED
NOV 19 2010
OFFICE OF PETITIONS

Charles I. Brodsky, Esq.
2 Bucks Lane
Marlboro NJ 07746

In re Application of	:	
Hess	:	
Application No. 10/683,215	:	
Patent No. 7,022,167	:	DECISION ON PETITION
Filed: October 14, 2003	:	UNDER 37 C.F.R. § 1.378(C)
Issue Date: April 4, 2006	:	
Attorney Docket Number: 5358	:	
Title: DESICCANT DEHUMIDIFIER	:	
HOSE CONNECTOR	:	

This is a decision on the petition filed pursuant to 37 C.F.R. § 1.378(c) on October 18, 2010, to accept the unintentionally delayed payment of a maintenance fee for the above-identified patent.

This petition pursuant to 37 C.F.R. § 1.378(c) is **GRANTED**.

The patent issued on April 4, 2006. The grace period for paying the 3½-year maintenance fee provided in 37 C.F.R. § 1.362(e) expired at midnight on April 4, 2010, with no payment received. Accordingly, the patent expired on April 4, 2010 at midnight.

A grantable petition pursuant to 37 C.F.R. § 1.378(c) must be accompanied by:

(1) The maintenance fee as set forth in 37 C.F.R. §§ 1.362(e) and 1.20;
(2) The surcharge for accepting a maintenance fee after expiration of a patent for non-timely payment of a maintenance fee, as set forth in 37 C.F.R. § 1.20;
(3) A statement that the delay was unintentional from a proper party in interest, and;
(4) The petition must be filed within 24 months of the

date of expiration.

With this petition, Petitioner submitted the surcharge associated with a petition to accept late payment of a maintenance fee as unintentional, the 3½-year maintenance fee, and a statement that the delay in payment of the maintenance fee was unintentional. This petition was timely filed within twenty-four months after the expiration of the six-month grace period.

Petitioner has met each of the requirements of Rule 1.378(c).

Accordingly, the maintenance fee in this case is hereby accepted and the above-identified patent is hereby reinstated as of the mail date of this decision.

Telephone inquiries regarding this decision should be directed to the undersigned at (571) 272-3225.[1] Inquiries pertaining to the submission of maintenance fees should be directed to the Maintenance Fee branch at 571-272-6500.

/Paul Shanoski/
Paul Shanoski
Senior Attorney
Office of Petitions

1 Petitioner will note that all practice before the Office should be in writing, and the action of the Office will be based exclusively on the written record in the Office. See 37 C.F.R. § 1.2. As such, Petitioner is reminded that no telephone discussion may be controlling or considered authority for any further action(s) of Petitioner.

UNITED STATES PATENT AND TRADEMARK OFFICE

Commissioner for Patents
United States Patent and Trademark Office
P.O. Box 1450
Alexandria, VA 22313-1450
www.uspto.gov

HEWLETT-PACKARD COMPANY
INTELLECTUAL PROPERTY ADMINISTRATION
3404 E. HARMONY ROAD
MAIL STOP 35
FORT COLLINS, CO 80528

MAILED
AUG 03 2011
OFFICE OF PETITIONS

In re Application of	:	
Kenny Tidwell, et al.	:	
Application No. 10/683,221	:	DECISION ON PETITION
Filed: October 10, 2003	:	
Attorney Docket No. 25137-11335	:	

This is a decision on the petition under the unintentional provisions of 37 CFR 1.137(b), filed July 11, 2011, to revive the above-identified application.

The petition is **GRANTED**.

This application became abandoned for failure to timely pay the issue and publication fees on or before June 1, 2011, as required by the Notice of Allowance and Fee(s) Due, mailed March 1, 2011. Accordingly, the date of abandonment of this application is June 2, 2011.

The petition satisfies the requirements of 37 CFR 1.137(b) in that petitioner has supplied (1) the reply in the form of payment of the issue fee of $1510 and the publication fee of $300, (2) the petition fee of $1620; and (3) a proper statement of unintentional delay.

Telephone inquiries concerning this decision should be directed to undersigned at (571) 272-1642. all other inquiries concerning this application should be directed to the Office of Data Management at their hotline 571-272-4200.

This application is being referred to the Office of Data Management for processing into a patent.

April M. Wise
Petitions Examiner
Office of Petitions

SPE RESPONSE FOR CERTIFICATE OF CORRECTION

DATE : 11/23/11

TO SPE OF : ART UNIT 3653

SUBJECT : Request for Certificate of Correction for Appl. No.: 10683254 Patent No.: 7168700

CofC mailroom date: 11/18/11

Please respond to this request for a certificate of correction within 7 days.

FOR IFW FILES:

Please review the requested changes/corrections as shown in the **COCIN** document(s) in the IFW application image. No new matter should be introduced, nor should the scope or meaning of the claims be changed.

Please complete the response (see below) and forward the completed response to scanning using document code **COCX**.

FOR PAPER FILES:

Please review the requested changes/corrections as shown in the attached certificate of correction. Please complete this form (see below) and forward it with the file to:

Certificates of Correction Branch (CofC)
Randolph Square – 9D10-A
Palm Location 7580
You can fax the Directors/SPE response to 571-273-3421

Note: **Should the changes be made?**

Lamonte Newsome

Certificates of Correction Branch

571-272-3421

Thank You For Your Assistance

The request for issuing the above-identified correction(s) is hereby:
Note your decision on the appropriate box.

SPE RESPONSE FOR CERTIFICATE OF CORRECTION

☑ **Approved** — **All** changes apply.

☐ **Approved in Part** — Specify below which changes **do not** apply.

☐ **Denied** — State the reasons for denial below.

Comments: _____

_____

_____

_____

_____

3653

SPE **Art Unit**

UNITED STATES PATENT AND TRADEMARK OFFICE

Commissioner for Patents
United States Patent and Trademark Office
P.O. Box 1450
Alexandria, VA 22313-1450
www.uspto.gov

GANZ LAW, P.C.
P O BOX 2200
HILLSBORO OR 97123

MAILED
MAR 22 2011
OFFICE OF PETITIONS

In re Application of :
Adler, et al. :
Application No. 10/683,344 :
Filed: October 14, 2003 :
Attorney Docket No. C2C-2.007 :

NOTICE

This is a notice regarding your request for acceptance of a fee deficiency submission under 37 CFR 1.28.

The Office no longer investigates or rejects original or reissue patent under 37 CFR 1.56. **1098 Off. Gaz. Pat. Office 502 (January 3, 1989)**. Therefore, nothing in this Notice is intended to imply that an investigation was done.

Your fee deficiency submission under 37 CFR 1.28 is hereby **ACCEPTED**.

This patent is no longer entitled to small entity status. Accordingly, all future fees paid in this patent must be paid at the large entity rate.

Inquiries related to this communication should be directed to the undersigned at (571) 272-3205.

/ALESIA M. BROWN/

Alesia M. Brown
Attorney Advisor
Office of Petitions

UNITED STATES PATENT AND TRADEMARK OFFICE

Commissioner for Patents
United States Patent and Trademark Office
P.O. Box 1450
Alexandria, VA 22313-1450
www.uspto.gov

Paper No.

FRED SOOFER
PLASTIKON INDUSTRIES, INC.
688 SANDOVAL WAY
HAYWARD CA 94544

MAILED

OCT 19 2010

OFFICE OF PETITIONS

In re Patent Number: 6908283 :
Issue Date: 06/21/2005 :
Application Number: 10/683597 :
Filing Date: 10/14/2003 :
For: VEHICLE FAN SHROUD MADE :
INTEGRALLY WITH A COOLANT :
RESERVOIR :

LETTER

This is a letter in reference to the petition under 37 CFR 1.378(c), filed on August 5, 2010, to accept the unintentionally delayed payment of a maintenance fee for the above-identified patent.

37 CFR 1.378(d) states that any petition under this section must be signed by an attorney or agent registered to practice before the U.S. Patent and Trademark Office, or by the patentee, the assignee, or other party in interest.

The petition form has been signed by Fred Soofer, President. However, petitioners have not provided sufficient proof that the person signing the petition, Fred Soofer, is authorized to act on behalf of the assignee.

MPEP 2590, states, in pertinent part:

> Any petition under 37 CFR 1.378 must be signed by an attorney or agent registered to practice before the U.S. Patent and Trademark Office, or by the patentee, the assignee, or other party in interest. A person or organization whose only responsibility insofar as the patent is concerned is the payment of a maintenance fee is not a party in interest for purposes of 37 CFR 1.378. If the petition is signed by a person not registered to practice before the Office, the petition must indicate that the person signing the petition is the patentee, assignee, or other party in interest. An assignee must comply with the requirements of 37 CFR 3.73(b) which is discussed in MPEP § 324.

MPEP 324 states, in pertinent part:

> The submission establishing ownership must be signed by a party authorized to act on behalf of the assignee. The submission under 37 CFR 3.73(b) may be signed on behalf of the assignee in the following manner if the assignee is an organization (e.g., corporation, partnership, university, government agency, etc.):
>
> (A) The submission may be signed by a person in the organization having apparent authority to sign on behalf of the organization. 37 CFR 3.73(b)(2)(ii). An officer (chief executive officer, president, vice-president, secretary, or treasurer) is presumed to have authority to sign on behalf of the organization. The signature of the chairman of the board of directors is acceptable, but not the signature of an individual director. Modifications of these basic titles are acceptable, such as vice-president for sales, executive vice-president, assistant treasurer, vice-chairman of the board of directors. In foreign countries, a person who holds the title "Manager" or "Director" is normally an officer and is presumed to have the authority to sign on behalf of the organization. A person having a title (administrator, general counsel) that does not clearly set forth that person as an officer of the assignee is not presumed to have authority to sign the submission on behalf of the assignee. A power of attorney (37 CFR 1.32(b)(4)) to a patent practitioner to prosecute a patent application executed by the applicant or the assignee of the entire interest does not make that practitioner an official of an assignee or empower the practitioner to sign the submission on behalf of the assignee.
>
> (B) The submission may be signed by any person, if the submission sets forth that the person signing is authorized (or empowered) to act on behalf of the assignee, i.e., to sign the submission on behalf of the assignee. 37 CFR 3.73(b)(2)(i).
>
> (C) The submission may be signed by a person empowered by an organizational resolution (e.g., corporate resolution, partnership resolution) to sign the submission on behalf of the assignee, if a copy of the resolution is, or was previously, submitted in the record.

> Where a submission does not comply with (A), (B), or (C) above, evidence of the person's authority to sign will be required.

It is therefore recommended that the person with authority to bind the corporation complete and sign the attached Statement Under 37 CFR 3.73(b) and submit it, along with a new petition form.

No additional fees are due.

A reply to this communication should be submitted within ONE (1) MONTH of receipt of this communication. This time period may not be extended. See 37 CFR 1.181.

Further correspondence with respect to this matter should be addressed as follows:

By mail: Mail Stop PETITIONS
Commissioner for Patents
Post Office Box 1450
Alexandria, VA 22313-1450

By hand: Customer Service Window
Mail Stop Petitions
Randolph Building
401 Dulany Street
Alexandria, VA 22314

By fax: (571) 273-8300
ATTN: Office of Petitions

Telephone inquiries related to this decision should be directed to the undersigned at (571) 272-3231.

D Wood

Douglas I. Wood
Senior Petitions Attorney
Office of Petitions

Encl: PTO/SB/66
PTO/SB/96

UNITED STATES PATENT AND TRADEMARK OFFICE

UNITED STATES DEPARTMENT OF COMMERCE
United States Patent and Trademark Office
Address: COMMISSIONER FOR PATENTS
P.O. Box 1450
Alexandria, Virginia 22313-1450
www.uspto.gov

APPLICATION NO.	FILING DATE	FIRST NAMED INVENTOR	ATTORNEY DOCKET NO.	CONFIRMATION NO.
10/683,939	10/10/2003	Frank S. Maggio	066-0003	3891

67413 7590 08/26/2010
PRASS LLP
2661 Riva Road
Bldg. 1000, Suite 1044
ANNAPOLIS, MD 21401

EXAMINER
CHORNESKY, ADAM B

ART UNIT	PAPER NUMBER
3688	

MAIL DATE	DELIVERY MODE
08/26/2010	PAPER

Please find below and/or attached an Office communication concerning this application or proceeding.

The time period for reply, if any, is set in the attached communication.

UNITED STATES PATENT AND TRADEMARK OFFICE

Commissioner for Patents
United States Patent and Trademark Office
P.O. Box 1450
Alexandria, VA 22313-1450
www.uspto.gov

AUG 26 2010

Prass LLP
2661 Riva Road
Bldg. 1000, Suite 1044
Annapolis, MD 21401

In re Application of:	:	
MAGGIO, FRANK S	:	DECISION ON PETITION
Application No.: 10/683,939	:	TO REQUEST RECLASSIFY
Filed: January 24, 2007	:	AND TRANSFER APPLICATION
For: METHOD AND SYSTEM FOR	:	
CHARACTERIZING AUDIENCES,	:	
INCLUDING AS VENUE AND	:	
SYSTEM TARGETED (VAST) RATINGS	:	

Applicant's petition filed under 37 CFR 1.182, on November 4, 2009 to request a reclassify and transfer of this application to another Art Unit that the applicant believes the application properly belongs. This petition, dealing with the classification of an application, is treated as a petition for supervisory review under 37 CFR 1.181.

This petition is **DISMISSED as moot**.

Applicant's petition sets forth, in the Background section, his experience with an earlier filed application that had ultimately matured into a patent. Despite the issuance of his prior application into a patent, applicant felt that there was a philosophy held by the examiner handling the case to avoid issuing patents. Applicant goes on to say that during the subsequent examination of several of his other applications he has come to the conclusion that many Art Units in the Business Methods area actively try to avoid issuing patents based upon his belief of their low allowance rate. Applicant further alleges that device oriented applications have been improperly classified in Business Methods Art Units. Applicant requests that the instant application be transferred from Art Unit 3688 (it currently assigned to Art Unit 3688) to Art Unit 2612. Applicant believes that the subject-matter of this application, being device oriented media ratings technology, is more properly examinable in TC 2600.

Initially, it is unclear what "device oriented" is actually defined as. It appears that applicant uses the term "device oriented" to reference one of the categories of the claimed subject matter: article claim. A review of the claims shows claims 79-111 and 123-131 are considered article claims, and claims 112-122, 132-142 are method of using claims. The classification and assignment of an application is governed by MPEP 903.08(e) which states that "*An application will be assigned as follows:*

(A) The assignment of nonprovisional applications follows, as far as possible, the rules or principles governing the classification of patents. Applications are generally assigned on the basis of where the application would have an original classification, if the claims it contains were in a patent."

While applications may be classified in multiple related classes/subclasses, the Original classification is determined by the following factors:

1) Hierarchy of categories of subject matter (e.g. method of using claims determine classification over article claims).

2) Superiority of types of subject matter (e.g. chemical subject matter controls over electrical subject matter).

3) Class superiority. All classes in the U.S. Classification system are assigned a relative superiority. This listing of all classes arranged by their relative superiority can be found on the USPTO website on the Classification Home Page under the link entitled "Classes Within the US Classification System Arranged by Related Subjects."

Based on the criteria above, the current Original classification of class 705 and subclass 14 is deemed to be appropriate. Applicant's arguments regarding the suggested classification have been considered but are not deemed to be persuasive. Furthermore, misclassified applications do occasionally occur and transfers between SPEs to the correct Art Unit take place prior to any examination on the merits taking place. However, this does not mean that an applicant be allowed to "cherry- pick" which area of the Office an application should be classified or assigned in order to maximize the odds for allowance based upon a perceived bias for or against allowance in any particular areas. As a result, applicant's request to transfer this application to class 340 in Art Unit 2612 is **DISMISSED as moot** in view of the fact that this application is now abandoned for applicant's failure to timely file a proper reply to the Office letter mailed on 01 September 2009.

It is further noted that applicant has filed this petition even though there is currently an Attorney of record in this case. The-Office will not engage in Dual Correspondence with an applicant and a patent practitioner. Accordingly, applicant is required to conduct all future correspondence with this Office through the attorney of record. In response to applicant's request to transfer two other applications 11/657,384 and 11/712,861, this request is denied as each application must be examined on its own merits so a petition must be filed for each application.

Any questions or comments with respect to this decision should be forwarded to Supervisory Patent Examiner Lynda Jasmin at (571) 272-6782.

Wynn W. Coggins, Director
Technology Center 3600
(571) 272-5350

lj/lm: 8/16/2010
LM

UNITED STATES PATENT AND TRADEMARK OFFICE

Commissioner for Patents
United States Patent and Trademark Office
P.O. Box 1450
Alexandria, VA 22313-1450
www.uspto.gov

MAILED

AUG 30 2010

OFFICE OF PETITIONS

COX SMITH MATTHEWS
INCORPORATED
112 EAST PECAN STREET, SUITE
1800
SAN ANTONIO TX 78205-1521

In re Application of	:	
Bravomalo et al.	:	ON APPLICATION FOR
Application No. 10/684,023	:	PATENT TERM ADJUSTMENT
Filed: October 10, 2003	:	
Attorney Dkt. No. 29471.4	:	
For: SYSTEM AND METHOD FOR	:	
ASSESSMENT OF HEALTH RISKS AND	:	
VISUALIZATION OF WEIGHT LOSS	:	
AND MUSCLE GAIN	:	

This is in response to the "APPLICATION FOR PATENT TERM ADJUSTMENT" filed April 20, 2010. This application is properly treated under 37 CFR 1.705(b). Applicants request that the determination of patent term adjustment be corrected from eight hundred fifty-three (853) days to one thousand three hundred forty-two (1,342) days.

As the instant application for patent term adjustment requests reconsideration of the patent term adjustment as it relates to the Office's failure to issue the patent within 3 years of the filing date, the application for patent term adjustment under 37 CFR 1.705(b) is **DISMISSED as PREMATURE**.

The Office acknowledges submission of the $200.00 fee set forth in 37 CFR 1.18(e) for consideration of the application for patent term adjustment under 37 CFR 1.705(b). The fee set forth in 37 CFR 1.18(e) is required and will not be refunded.

Knowledge of the actual date the patent issues is required to calculate the amount, if any, of additional patent term patentee is entitled to for Office failure to issue the patent within 3 years. See § 1.702(b). (This is true even where a request for continued examination (RCE) was filed). The computer will not undertake the § 1.702(b) calculation until the actual date of

issuance of the patent has been determined. Likewise, the computer will not calculate any further Office delay under § 1.702(a)(4) or applicant delay under § 1.704(c)(10) until the actual date of issuance of the patent has been determined. As such, the Office cannot make a determination on the correctness of the patent term adjustment until the patent has issued.

Requesting reconsideration of the patent term adjustment to be indicated on the patent under 37 CFR 1.705(b) based on the initial determination of patent term adjustment and a projected issuance date of the patent (or even the filing date of the request for continued examination) is premature. Accordingly, it is appropriate to dismiss as premature such a request.

Rather than file an application for patent term adjustment under 37 CFR 1.705(b) contesting the 37 CFR 1.702(b) calculation at the time of the mailing of the notice of allowance, applicant is advised that they may wait until the time of the issuance of the patent and file a request for reconsideration of the patent term adjustment pursuant to 37 CFR 1.705(d). As the USPTO does not calculate the amount of time earned pursuant to 37 CFR 1.702(b) until the time of the issuance of the patent, the Office will consider any request for reconsideration of the patent term adjustment due to an error in the calculation of 37 CFR 1.702(b) to be timely if the request for reconsideration is filed within two months of the issuance of the patent. However, as to all other bases for contesting the initial determination of patent term adjustment received with the notice of allowance, applicant must timely file an application for patent term adjustment prior to the payment of the issue fee[1].

---

[1] For example, if applicant disputes both the calculation of patent term adjustment under 37 CFR 1.702(a)(1) for Office failure to mail a first Office action or notice of allowance not later than fourteen months after the date on which the application was filed and under 37 CFR 1.702(b) for Office failure to issue a patent within three years of the actual filing date of the application, then applicant must still timely file an application for patent term adjustment prior to the payment of the issue fee to contest the calculation of Office delay in issuing a first Office action or notice of allowance. See 37 CFR 1.705(b) and 35 U.S.C. 154(b)(3)(B). A dispute as to the calculation of the §1.702(a)(1) period raised on request for reconsideration of patent term adjustment under 37 CFR 1.705(d) will be dismissed as untimely filed.

To the extent that applicant otherwise requests reconsideration of the patent term adjustment at the time of the mailing of the notice of allowance, the application for patent term adjustment is **GRANTED** to the extent indicated herein.

On January 20, 2010, the Office mailed the Determination of Patent Term Adjustment under 35 U.S.C. 154(b) in the above-identified application. The Notice stated that the patent term adjustment to date is 853 days. The instant application for patent term adjustment was timely filed on April 20, 2010.

Applicants contend that the adjustment pursuant to 37 CFR 1.703(a)(1) should be 1056 days as the first Office action was mailed on November 1, 2007.

Applicants' argument has been considered and has been determined to be persuasive. The Office action mailed on April 12, 2007 was mailed to the incorrect address, as the change of address submitted on November 15, 2004 was not entered. Thus, the adjustment pursuant to 37 CFR 1.703(a)(1) is 1056 days. The calculation is based upon the number of days, if any, in the period beginning on the day after the date that is fourteen months after the date on which the application was filed under 35 U.S.C. 111(a) or fulfilled the requirements of 35 U.S.C. 371 December 11, 2004 and ending on the November 1, 2007 date of mailing of either an action under 35 U.S.C. 132, or a notice of allowance under 35 U.S.C. 151, whichever occurs first

In view thereof, the correct determination of PTA at the time of the mailing of the notice of allowance is one thousand fifty-six (1,056) days

Any request for reconsideration of the patent term adjustment indicated on the patent must be timely filed within 2 months after issuance pursuant to 37 CFR 1.705(d) and **must** include payment of the required fee under 37 CFR 1.18(e).

The Office of Data Management has been advised of this decision. This application is being referred to the Office of Data Management for issuance of the patent.

Telephone inquiries specific to this matter should be directed to Petitions Attorney Charlema Grant at (571) 272-3215.

Anthony Knight
Director
Office of Petitions

Enclosure: Copy of REVISED PALM Screen

PTA/PTE Information | Patent Term Adjustment | Patent Term Extension

Application Number*: 10684023 Search | Explanation of PTA Calculation | Explanation of PTE Calculation

PTA Calculations for Application: 10684023

Application Filing Date	10/10/2003	OverLapping Days Between (A and B) or (A and C)	0
Issue Date of Patent		Non-Overlapping USPTO Delays:	853
A Delays	853	PTO Manual Adjustment	203
B Delays	0	Applicant Delay (APPL)	0
C Delays	0	Total PTA (days)	1056

* - Sorted Column

File Contents History

Action Number	Action Recorded Date	Action Due Date	Action Code	Action Description	Duration PTO	Duration APPL	Parent Action Number
76	08/28/2010		P028	Adjustment of PTA Calculation by PTO	203		0
69	01/20/2010		MN/=.	Mail Notice of Allowance			0
68	01/16/2010		IREV	Issue Revision Completed			0
67	01/16/2010		DVER	Document Verification			0
66	01/16/2010		N/=.	Notice of Allowance Data Verification Completed			0

65	01/15/2010	CNTA	Notice of Allowability	0
64	01/02/2010	FWDX	Date Forwarded to Examiner	0
63	12/16/2009	A...	Response after Non-Final Action	0
62	09/17/2009	MCTNF	Mail Non-Final Rejection	0
61	09/14/2009	CTNF	Non-Final Rejection	0
60	08/18/2009	FWDX	Date Forwarded to Examiner	0
58	08/18/2009	FWDX	Date Forwarded to Examiner	0
56	08/18/2009	ABN9	Disposal for a RCE / CPA / R129	0
59	08/12/2009	AMSB	Amendment Submitted/Entered with Filing of CPA/RCE	0
57	08/12/2009	RCEX	Request for Continued Examination (RCE)	0
55	08/12/2009	AF/D	Affidavit(s) (Rule 131 or 132) or Exhibit(s) Received	0
54	08/12/2009	BRCE	Workflow - Request for RCE - Begin	0
53	07/16/2009	MEXIN	Mail Examiner Interview Summary (PTOL - 413)	0
52	07/13/2009	EXIN	Examiner Interview Summary Record (PTOL - 413)	0
51	05/12/2009	MCTFR	Mail Final Rejection (PTOL - 326)	0
50	05/11/2009	CTFR	Final Rejection	0
49	03/09/2009	MEXIN	Mail Examiner Interview Summary (PTOL - 413)	0
47	03/04/2009	FWDX	Date Forwarded to Examiner	0
48	03/03/2009	EXIN	Examiner Interview Summary Record (PTOL - 413)	0
46	01/28/2009	A...	Response after Non-Final Action	0
45	10/28/2008	MCTNF	Mail Non-Final Rejection	0
44	10/27/2008	CTNF	Non-Final Rejection	0
42	08/25/2008	FWDX	Date Forwarded to Examiner	0
40	08/25/2008	ABN9	Disposal for a RCE / CPA / R129	0
43	08/13/2008	IDSC	Information Disclosure Statement considered	0
41	08/13/2008	RCEX	Request for Continued Examination (RCE)	0
39	08/13/2008	WIDS	Information Disclosure Statement (IDS) Filed	0
38	08/13/2008	BRCE	Workflow - Request for RCE - Begin	0
37	05/13/2008	MCTFR	Mail Final Rejection (PTOL - 326)	0
36	05/12/2008	CTFR	Final Rejection	0
35	04/06/2008	FWDX	Date Forwarded to Examiner	0
34	03/12/2008	A...	Response after Non-Final Action	0
33	12/13/2007	MCTNF	Mail Non-Final Rejection	0
32	12/10/2007	CTNF	Non-Final Rejection	0

29	12/05/2007		FWDX	Date Forwarded to Examiner		0
28	11/30/2007		ELC.	Response to Election / Restriction Filed		0
27	11/01/2007		MNRES	Mail Notice of Restarted Response Period		0
26	10/29/2007		NRES	Letter Restarting Period for Response (i.e. Letter re: References)		0
25	10/29/2007		C.AD	Correspondence Address Change		0
24	04/12/2007	12/10/2004	MCTRS	Mail Restriction Requirement	853	-1
23	04/10/2007		CTRS	Requirement for Restriction / Election		0
22	04/10/2007		DOCK	Case Docketed to Examiner in GAU		0
21	08/24/2006		DOCK	Case Docketed to Examiner in GAU		0
20	08/15/2006		DOCK	Case Docketed to Examiner in GAU		0
19	08/09/2006		DOCK	Case Docketed to Examiner in GAU		0
18	08/09/2006		DOCK	Case Docketed to Examiner in GAU		0
17	03/28/2006		DOCK	Case Docketed to Examiner in GAU		0
16	03/21/2006		DOCK	Case Docketed to Examiner in GAU		0
31	02/04/2005		IDSC	Information Disclosure Statement considered		0
15	02/04/2005		RCAP	Reference capture on IDS		0
14.7	02/04/2005		M844	Information Disclosure Statement (IDS) Filed		0
14	02/04/2005		WIDS	Information Disclosure Statement (IDS) Filed		0
13	06/29/2004		DOCK	Case Docketed to Examiner in GAU		0
12	06/29/2004		TSSCOMP	IFW TSS Processing by Tech Center Complete		0
11	04/01/2004		WROIPE	Application Return from OIPE		0
10	04/01/2004		ROIPE	Application Return TO OIPE		0
9	04/01/2004		OIPE	Application Dispatched from OIPE		0
8	04/01/2004		COMP	Application Is Now Complete		0
7	03/15/2004		ADDFLFEE	Additional Application Filing Fees		0
6	03/15/2004		OATHDECL	A statement by one or more inventors satisfying the requirement under 35 USC 115, Oath of the Applic		0
5	01/13/2004		INCD	Notice Mailed--Application Incomplete--Filing Date Assigned		0
4	01/06/2004		L194	Cleared by OIPE CSR		0
3	01/06/2004		CLSS	CASE CLASSIFIED BY OIPE		0
2	12/19/2003		SCAN	IFW Scan & PACR Auto Security Review		0
1	10/10/2003		IEXX	Initial Exam Team nn		0

Export to: Excel

UNITED STATES PATENT AND TRADEMARK OFFICE

Commissioner for Patents
United States Patent and Trademark Office
P.O. Box 1450
Alexandria, VA 22313-1450
www.uspto.gov

THE ECLIPSE GROUP LLP
6345 BALBOA BLVD., SUITE 325
ENCINO CA 91316

MAILED

DEC 22 2010

OFFICE OF PETITIONS

In re Application of	:	
Devantier et al.	:	
Application No. 10/684,043	:	DECISION ON PETITION
Filed: October 10, 2003	:	
Attorney Docket No. HI09049USU (P03061US)	:	

This is a decision on the petition under the unintentional provisions of 37 CFR 1.137(b), filed November 8, 2010, to revive the above-identified application.

The petition is **GRANTED**.

The application became abandoned for failure to reply in a timely manner to the final Office action mailed, November 19, 2009, which set a shortened statutory period for reply of three (3) months. No extensions of time under the provisions of 37 CFR 1.136(a) were obtained. Accordingly, the application became abandoned on February 20, 2010. A Notice of Abandonment was mailed July 20, 2010.

The petition satisfies the requirements of 37 CFR 1.137(b) in that petitioner has supplied (1) the reply in the form of a Request for Continued Examination (RCE) and fee of $810.00 and the submission required by 37 CFR 1.114; (2) the petition fee of $1,620.00; and (3) a proper statement of unintentional delay.

Further, it is not apparent whether the statement of unintentional delay was signed by a person who would have been in a position of knowing that the **entire** delay in filing the required reply from the due date for the reply until the filing of a grantable petition pursuant to 37 CFR 1.137(b) was unintentional. Nevertheless, in accordance with 37 CFR 10.18, the statement is accepted as constituting a certification of unintentional delay. However, in the event that petitioner has no knowledge that the delay was unintentional, petitioner must make such an inquiry to ascertain that, in fact, the delay was unintentional. If petitioner discovers that the delay was intentional, petitioner must notify the Office.

Telephone inquiries concerning this decision should be directed to the undersigned at (571) 272-7751.

This matter is being referred to Technology Center AU 2614 for processing of the Request for Continued Examination under 37 CFR 1.114 and the Amendment filed with the instant petition.

Joan Olszewski
Petitions Examiner
Office of Petitions

UNITED STATES PATENT AND TRADEMARK OFFICE

Commissioner for Patents
United States Patent and Trademark Office
P.O. Box 1450
Alexandria, VA 22313-1450
www.uspto.gov

THE ECLIPSE GROUP LLP
6345 BALBOA BLVD., SUITE 325
ENCINO CA 91316

MAILED
DEC 22 2010
OFFICE OF PETITIONS

In re Application of	:	
Devantier et al.	:	
Application No. 10/684,152	:	DECISION ON PETITION
Filed: October 10, 2003	:	
Attorney Docket No. HI09048USU (P03060US)	:	

This is a decision on the petition under the unintentional provisions of 37 CFR 1.137(b), filed November 8, 2010, to revive the above-identified application.

The petition is **GRANTED**.

The application became abandoned for failure to reply in a timely manner to the final Office action mailed, November 20, 2009, which set a shortened statutory period for reply of three (3) months. No extensions of time under the provisions of 37 CFR 1.136(a) were obtained. Accordingly, the application became abandoned on February 21, 2010. A Notice of Abandonment was mailed July 7, 2010.

The petition satisfies the requirements of 37 CFR 1.137(b) in that petitioner has supplied (1) the reply in the form of a Request for Continued Examination (RCE) and fee of $810.00 and the submission required by 37 CFR 1.114; (2) the petition fee of $1,620.00; and (3) a proper statement of unintentional delay.

Further, it is not apparent whether the statement of unintentional delay was signed by a person who would have been in a position of knowing that the **entire** delay in filing the required reply from the due date for the reply until the filing of a grantable petition pursuant to 37 CFR 1.137(b) was unintentional. Nevertheless, in accordance with 37 CFR 10.18, the statement is accepted as constituting a certification of unintentional delay. However, in the event that petitioner has no knowledge that the delay was unintentional, petitioner must make such an inquiry to ascertain that, in fact, the delay was unintentional. If petitioner discovers that the delay was intentional, petitioner must notify the Office.

Telephone inquiries concerning this decision should be directed to the undersigned at (571) 272-7751.

This matter is being referred to Technology Center AU 2614 for processing of the Request for Continued Examination under 37 CFR 1.114 and the Amendment filed with the instant petition.

Joan Olszewski
Petitions Examiner
Office of Petitions

UNITED STATES PATENT AND TRADEMARK OFFICE

Commissioner for Patents
United States Patent and Trademark Office
P.O. Box 1450
Alexandria, VA 22313-1450
www.uspto.gov

In re Patent No. 6916848
Issue Date: July 12,2005
Application No. 10684730
Filed: October 14,2003
Attorney Docket No. 18015-D5

:
:DECISION GRANTING PETITION
:UNDER 37 CFR 1.378(c)
:

This is a decision on the electronic petition, filed September 16,2010 ,under 37 CFR 1.378(c) to accept the unintentionally delayed payment of the 3.5 year maintenance fee for the above-identified patent.

The petition is **GRANTED**.

The maintenance fee is accepted, and the above-identified patent reinstated as of September 16,2010 . This decision also constitutes notice that the fee has been accepted. An electronic copy of the petition and this decision has been created as an entry in the Image File Wrapper. Nevertheless, petitioner should print and retain an independent copy.

Telephone inquiries related to this electronic decision should be directed to the Electronic Business Center at 1-866-217-9197.

UNITED STATES PATENT AND TRADEMARK OFFICE

Commissioner for Patents
United States Patent and Trademark Office
P.O. Box 1450
Alexandria, VA 22313-1450
www.uspto.gov

MILLEN, WHITE,
ZELANO & BRANIGAN, P.C.
2200 CLARENDON BLVD.
SUITE 1400
ARLINGTON VA 22201

MAILED
MAY 17 2011
OFFICE OF PETITIONS

In re Patent No. 7,481,318	:	
Issue Date: January 27, 2009	:	
Application No. 10/685,394	:	ON PETITION
Filed: October 16, 2003	:	
Attorney Docket No. BENNETT-0002	:	

This is in response to the REQUEST FOR CORRECTION OF ASSIGNEE'S NAMES PURSUANT TO MPEP § 1481.01 filed April 13, 2011, which is being treated as a request under 37 CFR 3.81(b)[1] to correct the name of the assignee on the front page of the above-identified patent by way of a Certificate of Correction.

The request is **GRANTED**.

A review of the record reveals that "ComocoPhillips Oilsands," among others, was named as the assignee on the form PTOL-85B. Petitioner requests that the above-identified patent be corrected to name the assignee as "ConocoPhillips Oilsands" and requests that a Certificate of Correction be issued identifying this assignee. Petitioner included a "Certificate of Correction" for this purpose.

Both petitioner's evidence and Office records show that the assignment of the above-identified application to "ConocoPhillips Oilsands" among others, was submitted for recording in the Office on October 16, 2003 before issuance of the patent (Reel/Frame 014612/0936) on January 27, 2009. This was also prior to payment of the Issue Fee on December 15, 2008.

[1] *See* MPEP 1309, subsection II, Official Gazette at 1283 OG 148 (June 22, 2004) or Final Register at 69 FR 29865 (May 26, 2004).

Receipt of the required $100 certificate of correction fee and required $130 processing fee is acknowledged.

A review of the record reveals that the Certificate of Correction correcting the assignee name as requested was issued May 10, 2011. This decision ratifies that issuance. No further action is required to implement this decision.

Telephone inquiries concerning this decision may be directed to the undersigned at (571) 272-3219.

Nancy Johnson
Senior Petitions Attorney
Office of Petitions

UNITED STATES PATENT AND TRADEMARK OFFICE

Commissioner for Patents
United States Patent and Trademark Office
P.O. Box 1450
Alexandria, VA 22313-1450
www.uspto.gov

FOLEY & LARDNER LLP
150 EAST GILMAN STREET
P.O. BOX 1497
MADISON WI 53701-1497

MAILED
MAR 25 2011
OFFICE OF PETITIONS

In re Application of :
Ye et al. :
Application No. 10/685,580 :
Filed: October 16, 2003 :
Attorney Docket No. 088245-2348 :
For: SINGLE-FIBER PROTECTION IN :
TELECOMMUNICATIONS NETWORKS :

ON APPLICATION FOR
PATENT TERM ADJUSTMENT

This is in response to the "REQUEST FOR RECONSIDERATION OF PATENT TERM ADJUSTMENT FOR PATENT APPLICATION UNDER 37 CFR §1.705(b)" filed February 22, 2011. Applicants request that the determination of patent term adjustment be corrected from seven hundred forty-nine (749) days to one thousand one hundred fourteen (1,114) days. Applicants' dispute the 29 day reduction. Applicants also request additional days based upon the failure to issue the patent within three years.

As the instant application for patent term adjustment requests reconsideration of the patent term adjustment as it relates to the Office's failure to issue the patent within 3 years of the filing date, the application for patent term adjustment under 37 CFR 1.705(b) is **DISMISSED as PREMATURE**.

The $200.00 petition fee set forth in 37 CFR 1.18(e) has been assessed. No additional fees are required. The fee set forth in 37 CFR 1.18(e) is required and will not be refunded.

Knowledge of the actual date the patent issues is required to calculate the amount, if any, of additional patent term patentee is entitled to for Office failure to issue the patent within 3 years. See § 1.702(b). (This is true even where a request for continued examination (RCE) was filed). The computer will not undertake the § 1.702(b) calculation until the actual date of

issuance of the patent has been determined. Likewise, the computer will not calculate any further Office delay under § 1.702(a)(4) or applicant delay under § 1.704(c)(10) until the actual date of issuance of the patent has been determined. As such, the Office cannot make a determination on the correctness of the patent term adjustment until the patent has issued.

Requesting reconsideration of the patent term adjustment to be indicated on the patent under 37 CFR 1.705(b) based on the initial determination of patent term adjustment and a projected issuance date of the patent (or even the filing date of the request for continued examination) is premature. Accordingly, it is appropriate to dismiss as premature such a request.

Rather than file an application for patent term adjustment under 37 CFR 1.705(b) contesting the 37 CFR 1.702(b) calculation at the time of the mailing of the notice of allowance, applicant is advised that they may wait until the time of the issuance of the patent and file a request for reconsideration of the patent term adjustment pursuant to 37 CFR 1.705(d). As the USPTO does not calculate the amount of time earned pursuant to 37 CFR 1.702(b) until the time of the issuance of the patent, the Office will consider any request for reconsideration of the patent term adjustment due to an error in the calculation of 37 CFR 1.702(b) to be timely if the request for reconsideration is filed within two months of the issuance of the patent. However, as to all other bases for contesting the initial determination of patent term adjustment received with the notice of allowance, applicant must timely file an application for patent term adjustment prior to the payment of the issue fee[1].

---

[1] For example, if applicant disputes both the calculation of patent term adjustment under 37 CFR 1.702(a)(1) for Office failure to mail a first Office action or notice of allowance not later than fourteen months after the date on which the application was filed and under 37 CFR 1.702(b) for Office failure to issue a patent within three years of the actual filing date of the application, then applicant must still timely file an application for patent term adjustment prior to the payment of the issue fee to contest the calculation of Office delay in issuing a first Office action or notice of allowance. See 37 CFR 1.705(b) and 35 U.S.C. 154(b)(3)(B). A dispute as to the calculation of the §1.702(a)(1) period raised on request for reconsideration of patent term adjustment under 37 CFR 1.705(d) will be dismissed as untimely filed.

To the extent that applicant otherwise requests reconsideration of the patent term adjustment at the time of the mailing of the notice of allowance, the application for patent term adjustment is **Granted** to the extent indicated.

On November 26, 2010, the Office mailed the Determination of Patent Term Adjustment under 35 U.S.C. 154(b) in the above-identified application. The Notice stated that the patent term adjustment to date is 749 days. The instant application for patent term adjustment was timely filed on February 22, 2011.

Applicants contend that the USPTO erroneously deducted 29 days pursuant to 37 CFR 1.704(c)(8) for the submission of an Information Disclosure Statement(IDS) filed with a Request for Continued Examination on October 9, 2008.

A review of the record shows that the 29 day reduction for the submission of the IDS on October 9, 2008 was not warranted. 37 CFR §1.704(c)(8) provides that a period of reduction is entered for:

> Circumstances that constitute a failure of the applicant to engage in reasonable efforts to conclude processing or examination of an application also include the following circumstances, which will result in the following reduction of the period of adjustment set forth in § 1.703 to the extent that the periods are not overlapping:
>
> (8) Submission of a supplemental reply or other paper, other than a supplemental reply or other paper expressly requested by the examiner, after a reply has been filed, in which case the period of adjustment set forth in § 1.703 shall be reduced by the number of days, if any, beginning on the day after the date the initial reply was filed and ending on the date that the supplemental reply or other such paper was filed;

In this instance, the IDS was submitted with the RCE on October 9, 2008, thus the submission of the IDS does not constitute a failure to engage in reasonable efforts to conclude prosecution. Accordingly, the 29 day reduction will be removed.

Further review of the application shows that the adjustment pursuant to 37 CFR 1.702(a)(1) of 1002 days is not warranted.

A review of the record shows that a 698 day, not a 1002 day adjustment should have been made for failure by the Office to mail at least one of the notifications under 35 U.S.C. 132 not later than fourteen months after the date the application was filed under 35 USC 1.111(a), pursuant to 37 CFR §1.702(a)(1). A restriction requirement was mailed on November 14, 2006, which is 14 months and 698 days after the application, was filed. As such the 1002 adjustment will be removed, and the 698 day adjustment will be entered.

The total days of Office delay at the time of the mailing of the notice of allowance is 752 days (698 + 54). The total days of Applicants delay at the time of the mailing of the Notice of Allowance is 278 days (45 + 28 + 145 + 27 + 6 + 27).

In view thereof, the determination of PTA at the time of the mailing of the notice of allowance is four hundred seventy-four **(474)** days.

Any request for reconsideration of the patent term adjustment indicated on the patent must be timely filed within 2 months after issuance pursuant to 37 CFR 1.705(d) and **must** include payment of the required fee under 37 CFR 1.18(e).

The address provided on the petition differs from the correspondence address of record. A courtesy copy of this decision is being mailed to the address associated with 26371. However, until otherwise instructed, all future correspondence regarding this application file will be directed solely to the above-noted correspondence address of record (customer number 23524).

The Office of Data Management has been advised of this decision. This application is being referred to the Office of Data Management for issuance of the patent.

Telephone inquiries specific to this matter should be directed to the undersigned at (571) 272-3215.

Charlema Grant

Charlema Grant
Attorney
Office of Petitions

Enclosure: Copy of REVISED PALM Screen

Cc: FOLEY & LARDNER LLP
777 EAST WISCONSIN AVENUE
MILWAUKEE, WI 53202-5306

Patent Term Adjustments

PTA/PTE Information | Patent Term Adjustment | Patent Term Extension

Application Number*: 10685580 Search | Explanation of PTA Calculation | Explanation of PTE Calculation

PTA Calculations for Application: 10685580

Application Filing Date	10/16/2003	OverLapping Days Between (A and B) or (A and C)	0
Issue Date of Patent		Non-Overlapping USPTO Delays:	1056
A Delays	1056	PTO Manual Adjustment	-275
B Delays	0	Applicant Delay (APPL)	307
C Delays	0	Total PTA (days)	474

* - Sorted Column

File Contents History

Action Number	Action Recorded Date	Action Due Date	Action Code	Action Description	Duration PTO	Duration APPL		Parent Action Number
130	03/24/2011		P028	Adjustment of PTA Calculation by PTO	698		0	
129	03/24/2011		P028	Adjustment of PTA Calculation by PTO		1002	0	
128	03/24/2011		P028	Adjustment of PTA Calculation by PTO	29		0	
121	11/26/2010		MN/=.	Mail Notice of Allowance			0	
120	11/22/2010		IREV	Issue Revision Completed			0	
119	11/22/2010		DVER	Document Verification			0	
118	11/22/2010		N/=.	Notice of Allowance Data Verification Completed			0	
117	11/22/2010		CNTA	Allowability Notice			0	
101	09/29/2010		FWDX	Date Forwarded to Examiner			0	
100	09/24/2010		A.QU	Response after Ex Parte Quayle Action			0	
102	09/07/2010		IDSC	Information Disclosure Statement considered			0	
99	09/07/2010		RCAP	Reference capture on IDS			0	
98	09/07/2010		M844	Information Disclosure Statement (IDS) Filed			0	
97	09/07/2010		WIDS	Information Disclosure Statement (IDS) Filed			0	
96	08/02/2010		MCTEQ	Mail Ex Parte Quayle Action (PTOL - 326)			0	
95	08/01/2010		CTEQ	Quayle action			0	
93	05/31/2010		FWDX	Date Forwarded to Examiner			0	
92	05/18/2010	04/21/2010	A...	Response after Non-Final Action		27	88	
91	05/18/2010		XT/G	Request for Extension of Time - Granted			0	
94	03/26/2010		IDSC	Information Disclosure Statement considered			0	
89	03/26/2010		WIDS	Information Disclosure Statement (IDS) Filed			0	
90	03/25/2010		M844	Information Disclosure Statement (IDS) Filed			0	
88	01/21/2010		MCTNF	Mail Non-Final Rejection			0	
87	01/19/2010		CTNF	Non-Final Rejection			0	
84	11/03/2009		FWDX	Date Forwarded to Examiner			0	
82	10/28/2009		MEXIN	Mail Examiner Interview Summary (PTOL - 413)			0	
83	10/27/2009		A...	Response after Non-Final Action			0	
81	10/23/2009		EXIN	Examiner Interview Summary Record (PTOL - 413)			0	
86	10/19/2009		IDSC	Information Disclosure Statement considered			0	
85	10/19/2009		M844	Information Disclosure Statement (IDS) Filed			0	
80	10/19/2009		WIDS	Information Disclosure Statement (IDS) Filed			0	
75	07/28/2009		MCTNF	Mail Non-Final Rejection			0	
74	07/27/2009		CTNF	Non-Final Rejection			0	
76	07/15/2009	07/09/2009	M844	Information Disclosure Statement (IDS) Filed		6	69	
73	07/15/2009		IDSC	Information Disclosure Statement considered			0	
71	07/15/2009		WIDS	Information Disclosure Statement (IDS) Filed			0	
70	07/14/2009		FWDX	Date Forwarded to Examiner			0	
72	07/09/2009		IDSC	Information Disclosure Statement considered			0	
69	07/09/2009		A.NE	Amendment after Final Rejection			0	
68	07/09/2009		M844	Information Disclosure Statement (IDS) Filed			0	
67	07/09/2009		WIDS	Information Disclosure Statement (IDS) Filed			0	
66	05/12/2009		MCTFR	Mail Final Rejection (PTOL - 326)			0	
65	05/11/2009		CTFR	Final Rejection			0	
79	03/19/2009	02/20/2009	M844	Information Disclosure Statement (IDS) Filed		27	60	
78	03/19/2009		RCAP	Reference capture on IDS			0	
63	03/19/2009		IDSC	Information Disclosure Statement considered			0	
62	03/19/2009		WIDS	Information Disclosure Statement (IDS) Filed			0	
61	03/07/2009		FWDX	Date Forwarded to Examiner			0	
60	02/20/2009		A...	Response after Non-Final Action			0	
59	11/26/2008		MCTNF	Mail Non-Final Rejection			0	
58	11/24/2008		CTNF	Non-Final Rejection			0	
54	10/15/2008		FWDX	Date Forwarded to Examiner			0	
52	10/15/2008		FWDX	Date Forwarded to Examiner			0	
50	10/15/2008		ABN9	Disposal for a RCE / CPA / R129			0	
57	10/09/2008		IDSC	Information Disclosure Statement considered			0	

55	10/09/2008	09/10/2008	M844	Information Disclosure Statement (IDS) Filed		29	44
53	10/09/2008		AMSB	Amendment Submitted/Entered with Filing of CPA/RCE			0
49	10/09/2008		WIDS	Information Disclosure Statement (IDS) Filed			0
48	10/09/2008		BRCE	Workflow - Request for RCE - Begin			0
47	09/30/2008		MCTAV	Mail Advisory Action (PTOL - 303)			0
46	09/25/2008		CTAV	Advisory Action (PTOL-303)			0
45	09/17/2008		FWDX	Date Forwarded to Examiner			0
44	09/10/2008		A.NE	Amendment after Final Rejection			0
42	07/10/2008	05/17/2008	MCTFR	Mail Final Rejection (PTOL - 326)	54		34
56	06/10/2008		IDSC	Information Disclosure Statement considered			0
43	06/10/2008	01/17/2008	M844	Information Disclosure Statement (IDS) Filed		145	34
41	06/10/2008		WIDS	Information Disclosure Statement (IDS) Filed			0
40	05/12/2008		CTFR	Final Rejection			0
35	02/27/2008		FWDX	Date Forwarded to Examiner			0
39	01/17/2008		IDSC	Information Disclosure Statement considered			0
37	01/17/2008		RCAP	Reference capture on IDS			0
36	01/17/2008		M844	Information Disclosure Statement (IDS) Filed			0
34	01/17/2008		A...	Response after Non-Final Action			0
33	01/17/2008		WIDS	Information Disclosure Statement (IDS) Filed			0
32	10/17/2007		MCTNF	Mail Non-Final Rejection			0
31	10/15/2007		CTNF	Non-Final Rejection			0
30	08/28/2007		C.AD	Correspondence Address Change			0
29	08/28/2007		PA..	Change in Power of Attorney (May Include Associate POA)			0
28	08/12/2007		FWDX	Date Forwarded to Examiner			0
27	08/07/2007	07/10/2007	A...	Response after Non-Final Action		28	25
26	08/07/2007		XT/G	Request for Extension of Time - Granted			0
25	04/10/2007		MCTNF	Mail Non-Final Rejection			0
24	04/02/2007		CTNF	Non-Final Rejection			0
23	03/02/2007		IDSC	Information Disclosure Statement considered			0
22	03/02/2007		RCAP	Reference capture on IDS			0
21.7	03/02/2007	01/16/2007	M844	Information Disclosure Statement (IDS) Filed		45	19
21	03/02/2007		WIDS	Information Disclosure Statement (IDS) Filed			0
20	01/30/2007		FWDX	Date Forwarded to Examiner			0
19	01/16/2007		ELC.	Response to Election / Restriction Filed			0
18	01/16/2007		XT/G	Request for Extension of Time - Granted			0
17	11/14/2006	02/16/2004	MCTRS	Mail Restriction Requirement	1002		1
16	11/13/2006		CTRS	Restriction/Election Requirement			0
15	08/23/2006		DOCK	Case Docketed to Examiner in GAU			0
14	03/21/2006		DOCK	Case Docketed to Examiner in GAU			0
51	10/09/2005		RCEX	Request for Continued Examination (RCE)			0
13	05/06/2004		TSSCOMP	IFW TSS Processing by Tech Center Complete			0
12	05/06/2004		DOCK	Case Docketed to Examiner in GAU			0
10	01/21/2004		WROIPE	Application Return from OIPE			0
9	01/21/2004		ROIPE	Application Return TO OIPE			0
8	01/21/2004		COMP	Application Is Now Complete			0
7	01/20/2004		OIPE	Application Dispatched from OIPE			0
6	01/20/2004		COMP	Application Is Now Complete			0
5	01/14/2004		L128	Cleared by L&R (LARS)			0
4	01/13/2004		CLSS	CASE CLASSIFIED BY OIPE			0
3	01/13/2004		L198	Referred to Level 2 (LARS) by OIPE CSR			0
2	12/13/2003		SCAN	IFW Scan & PACR Auto Security Review			0
11	10/16/2003		RQPR	Request for Foreign Priority (Priority Papers May Be Included)			0
1	10/16/2003		IEXX	Initial Exam Team nn			0
0.5	10/16/2003		EFILE	Filing date			0

Export to: Excel

UNITED STATES PATENT AND TRADEMARK OFFICE

Commissioner for Patents
United States Patent and Trademark Office
P.O. Box 1450
Alexandria, VA 22313-1450
www.uspto.gov

FOLEY & LARDNER LLP
150 EAST GILMAN STREET
P.O. BOX 1497
MADISON WI 53701-1497

MAILED
JUN 10 2011
OFFICE OF PETITIONS

In re Patent No. 7,933,517	:
Ye et al.	: DECISION ON REQUEST FOR
Issue Date: April 26, 2011	: RECONSIDERATION OF
Application No. 10/685,580	: PATENT TERM ADJUSTMENT
Filed: October 16, 2003	: AND NOTICE OF INTENT
Attorney Docket No. 088245-2348	: TO ISSUE CERTIFICATE OF
Title: SINGLE-FIBER PROTECTION	: CORRECTION
IN TELECOMMUNICATIONS NETWORKS	:

This is a decision on the petition filed on May 27, 2011, which is being treated as a petition under 37 CFR 1.705(d) requesting that the patent term adjustment indicated on the above-identified patent be corrected to indicate that the term of the above-identified patent is extended or adjusted by one thousand one hundred fourteen (1,114) days.

The petition to correct the patent term adjustment indicated on the above-identified patent to indicate that the term of the above-identified patent is extended or adjusted by one thousand one hundred fourteen (1,114) days is **GRANTED.**

The application is being forwarded to the Certificates of Branch for issuance of a certificate of correction. The Office will issue a certificate of correction indicating that the term of the above-identified patent is extended or adjusted by **one thousand one hundred fourteen (1,114)** days.

The Office acknowledges submission of the $200.00 fee set forth in 37 CFR 1.18(e). No additional fees are required. The fee set forth in 37 CFR 1.18(e) is a requirement and will not be refunded.

Telephone inquiries specific to this matter should be directed to the undersigned at (571) 272-3215.

Charlema Grant
Attorney
Office of Petitions

Enclosure: Copy of DRAFT Certificate of Correction

UNITED STATES PATENT AND TRADEMARK OFFICE

CERTIFICATE OF CORRECTION

PATENT : 7,933,517 B2

DATED : **April 26, 2011** **DRAFT**

INVENTOR(S) : Ye et al

It is certified that error appears in the above-identified patent and that said Letters Patent is hereby corrected as shown below:

On the cover page,

[*] Notice: Subject to any disclaimer, the term of this patent is extended or adjusted under 35 USC 154(b) by 474 days

Delete the phrase "by 474 days" and insert – by 1,114 days--

UNITED STATES PATENT AND TRADEMARK OFFICE

UNITED STATES DEPARTMENT OF COMMERCE
United States Patent and Trademark Office
Address: COMMISSIONER FOR PATENTS
P.O. Box 1450
Alexandria, Virginia 22313-1450
www.uspto.gov

APPLICATION NO.	FILING DATE	FIRST NAMED INVENTOR	ATTORNEY DOCKET NO.	CONFIRMATION NO.
10/685,692	10/14/2003	Mark Anderson	2054.001US5	7059

21186 7590 09/29/2010
SCHWEGMAN, LUNDBERG & WOESSNER, P.A.
P.O. BOX 2938
MINNEAPOLIS, MN 55402

EXAMINER
DINH, KHANH Q

ART UNIT	PAPER NUMBER
2451	

NOTIFICATION DATE	DELIVERY MODE
09/29/2010	ELECTRONIC

Please find below and/or attached an Office communication concerning this application or proceeding.

The time period for reply, if any, is set in the attached communication.

Notice of the Office communication was sent electronically on above-indicated "Notification Date" to the following e-mail address(es):

uspto@slwip.com
request@slwip.com

UNITED STATES PATENT AND TRADEMARK OFFICE

COMMISSIONER FOR PATENTS
UNITED STATES PATENT AND TRADEMARK OFFICE
WASHINGTON, D.C. 20231
www.uspto.gov

MAILED

SEP 28 2010

DIRECTOR OFFICE
TECHNOLOGY CENTER 2400

Andre L. Marais
SCHWEGMAN, LUNDBERG & WOESSNER, P.A.
P.O. BOX 2938
MINNEAPOLIS MN 55402

In re Application of: ANDERSON, M., et al.)
Application No.: **10/685,692**)
Filed: October 14, 2003)
For: **METHOD AND SYSTEM TO ASSOCIATED A GEOGRAPHIC LOCATION INFORMATION WITH A NETWORK ADDRESS USING A COMBINATION OF AUTOMATED AND MANUAL PROCESS**)

DECISION ON PETITION UNDER 37 C.F.R. § 1.84(a)(2) TO ACCEPT COLOR DRAWINGS

This is a decision on the petition under 37 C.F.R. 1.84(a)(2), filed October 14, 2003, requesting acceptance of color drawings

The petition is **GRANTED**.

REGULATIONS AND PRACTICE

37 C.F.R. § 1.84(a)(2) states:

(2) *Color.* On rare occasions, color drawings may be necessary as the only practical medium by which to disclose the subject matter sought to be patented in a utility or design patent application or the subject matter of a statutory invention registration. The color drawings must be of sufficient quality such that all details in the drawings are reproducible in black and white in the printed patent. Color drawings are not permitted in international applications (see PCT Rule 11.13), or in an application, or copy thereof, submitted under the Office electronic filing system. The Office will accept color drawings in utility or design patent applications and statutory invention registrations only after granting a petition filed under this paragraph explaining why the color drawings are necessary. Any such petition must include the following:

(i) The fee set forth in § 1.17(h);

(ii) Three (3) sets of color drawings;

(iii) An amendment to the specification to insert (unless the specification contains or has been previously amended to contain) the following language as the first paragraph of the brief description of the drawings:

The patent or application file contains at least one drawing executed in color. Copies of this patent or patent application publication with color drawing(s) will be provided by the Office upon request and payment of the necessary fee.

OG Notice 1348 OG 389 (Nov 24, 2009) - Legal Framework for Electronic Filing System - Web (EFS-Web) (21Oct 2009) states:

> ...The requirement for three (3) sets of color drawings under 37 CFR 1.84(a)(2)(ii) is not applicable to color drawings submitted via EFS-Web. Therefore, only one set of such color drawings is necessary when filing via EFS-Web.

DECISION

The petition, filed Oct 14, 2003 satisfies conditions (i)-(iii); condition (ii) is satisfied per OG Notice 1348 OG 389). Thus, the petition is **GRANTED**.

Any inquiry regarding this decision should be directed the undersigned whose telephone number is (571) 272-3902.

/Beatriz Prieto/

Beatriz Prieto, WQAS
Technology Center 2400
Network, Multiplexing, Cable and Security

PATENT

IN THE UNITED STATES PATENT AND TRADEMARK OFFICE
(Case No. 97-022-D1CO)

In application of	)	
	)	
Rubin, *et al.*	)	**Examiner: Skibinsky, A. L.**
	)	
Serial No. 10/685,737	)	
Patent No. 7,853,411	)	
	)	**Group Art Unit: 1631**
Filed: October 15, 2003	)	
Issue Date: December 14, 2010	)	
	)	
For: A System for Cell-Based Screening	)	**Confirmation No.: 6145**

Mail Stop **Patent Ext.**
Commissioner for Patents
PO Box 1450
Alexandria, VA 22313-1450

REQUEST FOR RECONSIDERATION OF PATENT TERM ADJUSTMENT UNDER 37 C.F.R. 1.705 (b)-(d)

Sir:

Responsive to the Determination of Patent Term Adjustment posted on the Patent Application Information Retrieval System (PAIR) as of the December 14, 2010 issue date of U.S. Patent No. 7,853,411 ('411), and in light of the recent ruling in *Wyeth v. Dudas*, No. 07-1492, slip op. (D.D.C. Sept. 30, 2008) the Patentees submit this Request for Reconsideration of Patent Term Adjustment under 37 C.F.R. 1.705(b)-(d) along with the required fee set forth in 1.18(e). As stated in 37 C.F.R. 1.705(d):

> If the patent indicates or should have indicated a revised patent term adjustment, any request for reconsideration of the patent term adjustment indicated in the patent must be filed within two months of the date the patent issued and must comply with the requirements of paragraphs (b)(1) and (b)(2) of this section. Any request for reconsideration under this

> section that raises issues that were raised, or could have been raised, in an application for patent term adjustment under paragraph (b) of this section shall be dismissed as untimely as to those issues.

The '411 patent issued on December 14, 2010. This request is being submitted within two months of the issue date of the '411 patent, and complies with the deadline specified in 37 C.F.R. 1.705(d). In addition, given that the final determination of Patent Term Adjustment and the inclusion of "B delay" is not set until issuance, Patentees could not have raised this issue prior to payment of the issue fee. Thus, Patentees contend this request is timely.

The data available on PAIR indicates that the '411 patent has been granted a 1340 day Patent Term Adjustment. Patentees submit that the correct Patent Term Adjustment should be 1649 days. Patentees, therefore, request that the '411 patent be granted an additional 309 (1649 - 1340 = 309) days of patent term.

Patentees agree with the Patent Office's initial determination, which, for purposes of this request and in keeping with the explanation provided in *Wyeth*, Patentees will refer to as the "A delay" and "C delay." In the "A delay" the Patent Office delayed prosecution by issuing the first communication 14 months plus 366 days after the filing of the application (37 CFR 1.703(a)(1)). The Patent Office was also responsible for a "C delay" by issuing the BPAI decision 624 days after the filing of the Notice of Appeal (37 CFR 1.703 (e)). Therefore the Patent Office was responsible for a total "A delay" of 366 days and a "C delay" of 624 days for a total of 990 (366 + 624 = 990) days delay.

In the "A delay" the Patentees delayed prosecution by filing a response to an Office Action 3 months plus 53 days after the mailing of the respective action (37 CFR 1.704(b)) and by twice filing a non-responsive amendment; the first time was 29 days after the filing of the original Response and the second time was 33 days after the filing of the second Response (see 37 CFR 1.704(c)(7)). The Applicant was responsible for two more delays; by filing a Response to an Office Action 3 months plus 62 days after the mailing of the respective Action, and by filing a Notice of Appeal 3 months plus 61 days after the mailing of the respective Action (see 37 CFR 1.704(b)). Therefore the Applicants were responsible for a total "A delay" of 238 (53 + 29 + 33 + 62 + 61 = 238) days delay.

These combined delays result in an "A delay" and "C delay" of 752 days (990 – 238 = 752) and Applicants' calculations are in agreement with the Patent Office regarding the "A" and "C" delays.

The Patent Office however has miscalculated the Patent Term Adjustment days related to the "B delay," which are the days delay resulting from an application pending longer than three years. According to 37 C.F.R. 1.703(b):

> The period of adjustment under § 1.702(b) is the number of days, if any, in the period beginning on the day after the date that is three years after the date on which the application was filed under 35 U.S.C. 111(a) or the national stage commenced under 35 U.S.C. 371(b) or (f) in an international application and ending on the date a patent was issued, but not including the sum of the following periods:
>
> > 4) The number of days, if any, in the period beginning on the date on which a notice of appeal to the Board of Patent Appeals and Interferences was filed under 35 U.S.C. 134 and § 41.31 of this title and ending on the date of the last decision by the Board of Patent Appeals and Interferences or by a Federal court in an appeal under 35 U.S.C. 141 or a civil action under 35 U.S.C. 145, or on the date of mailing of either an action under 35 U.S.C. 132, or a notice of allowance under 35 U.S.C. 151, whichever occurs first, if the appeal did not result in a decision by the Board of Patent Appeals and Interferences.

Currently the Patent Office has calculated the "B delay" to be 588 days; Applicants respectfully believe this to be an error. As noted in 37 CFR 1.703(b) and 1.703(b)(4) the "B delay" runs from "the date that is three years after the date on which the application was filed" until the date of issuance but does not include "the number of days in the period beginning on the date on which a notice of appeal to the Board of Patent Appeals and Interferences was filed and ending on the date of the last decision by the Board of Patent Appeals and Interferences." The instant application was filed on October 15, 2003 and a Notice of Appeal was filed on November 10, 2008, which is 3 years plus 756 days

after the filing date. The "B delay" then continues after the mailing of the BPAI decision on July 26, 2010 until the date of issuance on December 14, 2010, resulting in an additional "B delay" of 141 days. Thus, the total "B delay" is 897 days and NOT 588 as asserted by the Patent Office (756 + 141 = 897)

Thus, the total Patent Term Adjustment due to the "A," "B," and "C" delays and minus the Applicants' "A" delay is 1649 days (366 + 897 + 624 – 238 = 1649).

For these reasons, the Patent Term Adjustment for this case should be 1649 days.

In light of the foregoing, the Patentees respectfully request that an additional 309 days of Patent Term Adjustment be added to the patent term for Patent Office delay, resulting in a total Patent Term Adjustment of 1649 days. If a telephone conference would expedite the prosecution of this Request for Reconsideration of Patent Term Adjustment, please contact the undersigned agent as indicated below.

Respectfully submitted,

Date: December 14, 2010

/Isadora F. Bielsky/

Isadora F. Bielsky, Ph.D.
Registration No. 60,748

McDonnell Boehnen Hulbert & Berghoff
300 South Wacker Drive
Chicago, IL 60606

Telephone: 312-913-0001
Facsimile: 312-913-0002

UNITED STATES PATENT AND TRADEMARK OFFICE

UNITED STATES DEPARTMENT OF COMMERCE
United States Patent and Trademark Office
Address: COMMISSIONER FOR PATENTS
P.O. Box 1450
Alexandria, Virginia 22313-1450
www.uspto.gov

MCDONNELL BOEHNEN HULBERT & BERGHOFF LLP
300 S. WACKER DRIVE
32ND FLOOR
CHICAGO, IL 60606

Mail Date: 12/20/2010

Applicant	: Richard A. Rubin	: DECISION ON REQUEST FOR
Patent Number	: 7853411	: RECALCULATION of PATENT
Issue Date	: 12/14/2010	: TERM ADJUSTMENT IN VIEW
Application No	: 10/685,737	: OF WYETH
Filed	: 10/15/2003	:
		:

The Patentee's Request for Recalculation is **DISMISSED.**

This Request is deemed ineligible for consideration for one or more of the following reasons:

(A). The patent for which PTA recalculation is requested is either a design or reissue application or is a reexamination proceeding;

(B). The patent for which PTA recalculation is requested resulted from a utility or plant application filed under 35 USC 111(a) before May 29, 2000 and no CPA filed in the application on/after May 29, 2000;

(C). The patent for which PTA recalculation is requested resulted from an international application in which the international filing date was before May 29, 2000 and no CPA filed in the application on/after May 29, 2000;

(D). The patent for which PTA recalculation is requested issued on/after March 2, 2010;

(E). The Request for Recalculation was filed more than 180 days after the grant date of the patent and the request was not filed within two months of a dismissal of a request for reconsideration of the of the patent term under 37 CFR 1.705(d);

(F). The Request for Recalculation is not solely limited to USPTO pre-Wyeth interpretation of 35 U.S.C. 154(b)(2)(A);

or

(G). A civil action was filed pursuant to 35 U.S.C. 154(b)(4)(A)concerning the same patent at issue in this request.

Patentee may file a reply to this decision dismissing the Request for Recalculation. Patentee must file such reply within one month or thirty days, whichever is longer, of the mail date of the decision dismissing the Request for Recalculation. No fee is required if patentee is asserting in the reply that the dismissal for ineligibility is improper.

Patentee should use document code PET.OP if electronically filing a reply to this dismissal. If the USPTO finds that the request was improperly deemed ineligible, the USPTO will mail applicant a recalculation determination.

Patentee should be aware that in order to preserve the right to review in the United States District Court for the District of Columbia of the USPTO patent term adjustment determination, patentee must ensure that he or she also take the steps required under 35 U.S.C. 154(b)(4)(A). Nothing in the request for recalculation should be construed as providing an alternative time frame for commencing a civil action under 35 U.S.C. 154 (b)(4)(A).

Any questions concerning this decision should be directed to the Office of Patent Legal Administration at 571-272-7702.

UNITED STATES PATENT AND TRADEMARK OFFICE

Commissioner for Patents
United States Patent and Trademark Office
P.O. Box 1450
Alexandria, VA 22313-1450
www.uspto.gov

MAILED
MAR 25 2011
OFFICE OF PETITIONS

MCDONNELL BOEHNEN HULBERT & BERGHOFF LLP
300 S. WACKER DRIVE
32ND FLOOR
CHICAGO IL 60606

In re Patent of Rubin et al.	:	DECISION ON REQUEST
Patent No. 7,853,411	:	FOR RECONSIDERATION OF
Issue Date: December 14, 2010	:	PATENT TERM ADJUSTMENT
Application No. 10/685,737	:	and
Filed: October 15, 2003	:	NOTICE OF INTENT TO ISSUE
Docket No.: 97,022-D1-CO	:	CERTIFICATE OF CORRECTION

This is a decision on the petition filed on December 14, 2010 and re-submitted on January 17, 2011, which is being treated as a petition under 37 CFR 1.705(d) requesting that the patent term adjustment indicated on the above-identified patent be corrected to indicate that the term of the above-identified patent is extended or adjusted by one thousand six hundred forty-nine (1649) days.

The petition to correct the patent term adjustment indicated on the above-identified patent to indicate that the term of the above-identified patent is extended or adjusted by one thousand six hundred forty-nine (1649) days is **granted**.

The sole issue pertains to the three years to issue guarantee of 35 U.S.C. 154(b)(1)(B) and 37 CFR 1.702(b) (hereinafter, "B delay"). The maximum B delay period begins on October 16, 2006, which is one day after three years after the filing of the application on October 15, 2003, and ends on December 14, 2010, when the patent issued, and is 1521 days.

As stated in 35 U.S.C. 154(b)(1)(B)(ii), B delay does not include "any time consumed by appellate review by the Board of Patent Appeals and Interferences." The period of B delay does not include the 624 day period beginning on November 10, 2008, the date the Notice of Appeal was filed, and ending on July 26, 2010, the date the Board mailed a decision reversing the examiner. Excluding the 624 days consumed by appellate review results in a period of B delay of 897 days (1521 - 624).

In light thereof, the correct patent term adjustment is 1649 days, which is the sum of 366 days of delay under 35 U.S.C. 154(b)(1)(A), 897 days of B Delay, and 624 days of C Delay, reduced by 238 day for Applicant delay.

The Office acknowledges submission of the $200.00 fee set forth in 37 CFR 1.18(e). No additional fees are required.

The application is being forwarded to the Certificates of Branch for issuance of a certificate of correction. The Office will issue a certificate of correction indicating that the term of the above-identified patent is extended or adjusted **by one thousand six hundred forty-nine (1649)** days.

Telephone inquiries specific to this matter should be directed to the undersigned at (571) 272-3230.

Shirene Willis Brantley

Shirene Willis Brantley
Senior Petitions Attorney
Office of Petitions

Enclosure: Copy of DRAFT Certificate of Correction

UNITED STATES PATENT AND TRADEMARK OFFICE

CERTIFICATE OF CORRECTION

PATENT : 7,853,411 B2

DATED : **December 14, 2010** **DRAFT**

INVENTOR(S) : Rubin et al.

It is certified that error appears in the above-identified patent and that said Letters Patent is hereby corrected as shown below:

On the cover page,

[*] Notice: Subject to any disclaimer, the term of this patent is extended or adjusted under 35 U.SC. 154(b) by 1340 days

Delete the phrase "by 1340 days" and insert – by 1649 days--

UNITED STATES PATENT AND TRADEMARK OFFICE

Commissioner for Patents
United States Patent and Trademark Office
P.O. Box 1450
Alexandria, VA 22313-1450
www.uspto.gov

GEORGE S. COLE, ESQ.
495 SEAPORT COURT, SUITE 101
REDWOOD CITY, CA 94063

MAILED
FEB 04 2011
OFFICE OF PETITIONS

In re Patent No. 7,103,434 :
Issue Date: September 5, 2006 :
Application No. 10/686,090 : ON PETITION
Filed: October 14, 2003 :
Patentee(s): Alex H. Chernyak, et. al. :

This is a decision on the petition under 37 CFR 1.378(c), filed on November 22, 2010, to accept the delayed payment of a maintenance fee for the above-identified patent.

Since petitioner has demonstrated to the satisfaction of the Commissioner that the delay in timely paying the maintenance fee was unintentional, the petition under 37 CFR 1.378(c) is hereby **GRANTED**.

The maintenance fee is hereby accepted and the above-identified patent is reinstated as of the mail date of this decision.

It is noted that the patent number provided on the present petition is incorrect. However, since there are enough identifiers present on the petition, it has been properly matched with the above patent[1].

Additionally, the proper surcharge for payment after expiration is $1,640. Since the maintenance fee was paid outside the six (6) months grace period, the $65 surcharge submitted with the instant petition is unnecessary and petitioner may request a refund of this fee by writing to the following address: Mail Stop 16, Commissioner for Patents, P.O. Box 1450, Alexandria, VA 22313-1450. A copy of this decision should accompany petitioner's request.

This patented file is being forwarded to Files Repository.

Telephone inquiries should be directed to the undersigned at (571) 272-3226.

Andrea Smith
Petitions Examiner
Office of Petitions

[1] Petitioner is cautioned to ensure that the correct identifying data appears on all correspondence submitted to the USPTO.

UNITED STATES PATENT AND TRADEMARK OFFICE

Commissioner for Patents
United States Patent and Trademark Office
P.O. Box 1450
Alexandria, VA 22313-1450
www.uspto.gov

MAILED
AUG 05 2011
OFFICE OF PETITIONS

BEVER, HOFFMAN & HARMS, LLP
901 CAMPISI WAY
SUITE 370
CAMPBELL, CA 95008

In re Patent No. 7,228,822 :
Issue Date: June 12, 2007 :
Application No. 10/686,097 : ON PETITION
Filed: October 14, 2003 :
Attorney Docket No. VTI-002 :

This is a decision on the petition under 37 CFR 1.378(c), filed July 1, 2011, to accept the unintentionally delayed payment of a maintenance fee for the above-identified patent.

The petition is **GRANTED**.

This patent expired on June 12, 2011 for failure to pay the 3 ½ year maintenance fee. Since this petition was submitted within twenty-four months after the six-month grace period provided in 37 CFR 1.362(e), the petition was timely filed under the provisions of 37 CFR 1.378(c).

The maintenance fee is hereby accepted and the above-identified patent is reinstated as of the mail date of this decision.

Petitioner will not receive future correspondence related to maintenance fees for the patent unless a "Fee Address" Indication Form (see PTO/SB/47) and Request for Customer Number (see PTO/SB/125) are submitted.

Telephone inquiries concerning this decision should be directed to undersigned at (571) 272-1642.

/AMW/
April M. Wise
Petitions Examiner
Office of Petitions

cc: ALDON R. REINHARDT
387 MOSELEY ROAD
HILLSBOROUGH, CA 94010

UNITED STATES PATENT AND TRADEMARK OFFICE

Commissioner for Patents
United States Patent and Trademark Office
P.O. Box 1450
Alexandria, VA 22313-1450
www.uspto.gov

SANDRA LEE LIPKIN A LAW CORPORATION
P.O. Box 3518
VENTURA, CA 93006

MAILED

MAR 10 2011

OFFICE OF PETITIONS

In re Patent No. 7,117,543 :
Issue Date: October 10, 2006 :
Application No. 10/686,392 : ON PETITION
Filed: October 14, 2003 :
Patentee(s): Angel Gunnarshaug :

This is a decision on the petition under 37 CFR 1.378(c), filed on December 27, 2010, to accept the delayed payment of a maintenance fee for the above-identified patent.

The present petition is not signed by an attorney of record. However, in accordance with 37 CFR 1.34(a), the signature of Sandy Lipkin appearing on the petition shall constitute a representation to the United States Patent and Trademark Office that he/she is authorized to represent the particular party on whose behalf he/she acts.

The petition is **DISMISSED**.

A petition to accept the unintentionally delayed payment of a maintenance fee under 35 U.S.C. § 41(c) and 37 CFR 1.378(c) must be accompanied by: (1) a statement that the delay was unintentional; (2) payment of the appropriate maintenance fee, unless previously submitted; (3) payment of the surcharge set forth in 37 CFR 1.20(i)(2). This petition lacks item (3) above.

A review of the record shows that petitioner submitted a check in the amount of $1,300 on December 22, 2010. The fee payment of $1,300 was to be applied as follows: $490 for payment of the 3 ½ year small entity maintenance fee and $810 towards the unintentional late payment surcharge. However, the proper surcharge for a patent expired unintentionally after the six months grace period is $1,640. Therefore, this patent cannot be reinstated until the deficiency of $830 (1640–810) has been submitted[1].

[1] It is noted that petitioner authorizes the Office "to charge any maintenance fee, surcharge or petition deficiency" to the deposit account number given in the petition filed on December 27, 2010. Unfortunately, the listed deposit account contains insufficient funds.

If reconsideration of this decision is desired, a petition for reconsideration under 37 CFR 1.378(e) must be filed within **TWO (2) MONTHS** from the mail date of this decision. No extension of this two-month time limit can be granted under 37 CFR 1.136(a) or (b). This is **not** a final agency action within the meaning of 5 U.S.C. § 704.

Any petition for reconsideration of this decision must be accompanied by the petition fee of $400 as set forth in 37 CFR 1.17(f). The petition for reconsideration must include the lacking item(s) noted above, since, after a decision on the petition for reconsideration, no further reconsideration or review of the matter will be undertaken by the Commissioner.

Further correspondence with respect to this matter should be addressed as follows:

By mail: Mail Stop PETITION
Commissioner for Patents
Post Office Box 1450
Alexandria, VA 22313-1450

By hand: U.S. Patent and Trademark Office
Customer Service Window, Mail Stop Petitions
Randolph Building
401 Dulany Street
Alexandria, VA 22314

The centralized facsimile number is (571) 273-8300.

Telephone inquiries should be directed to the undersigned at (571) 272-3226.

Andrea Smith
Petitions Examiner
Office of Petitions

UNITED STATES PATENT AND TRADEMARK OFFICE

Commissioner for Patents
United States Patent and Trademark Office
P.O. Box 1450
Alexandria, VA 22313-1450
www.uspto.gov

SANDRA LEE LIPKIN A LAW CORPORATION
P.O. Box 3518
VENTURA, CA 93006

MAILED

MAY 05 2011

OFFICE OF PETITIONS

In re Patent No. 7,117,543 :
Issue Date: October 10, 2006 :
Application No. 10/686,392 : ON PETITION
Filed: October 14, 2003 :
Patentee(s): Angel Gunnarshaug :

This is a decision on the renewed petition under 37 CFR 1.378(c), filed on March 31, 2011, to accept the delayed payment of a maintenance fee for the above-identified patent.

In response to the decision mailed March 10, 2011, petitioner submits the present renewed petition and fee deficiency of $830 on March 31, 2011.

The present petition is not signed by an attorney of record. However, in accordance with 37 CFR 1.34(a), the signature of Sandra Lee Lipkin appearing on the petition shall constitute a representation to the United States Patent and Trademark Office that she is authorized to represent the particular party on whose behalf she acts.

The $400 renewed petition fee has been charged to petitioner's deposit account, as authorized.

Since petitioner has demonstrated to the satisfaction of the Commissioner that the delay in timely paying the maintenance fee was unintentional, the petition under 37 CFR 1.378(c) is hereby **GRANTED**.

The maintenance fee is hereby accepted and the above-identified patent is reinstated as of the mail date of this decision.

This patented file is being forwarded to Files Repository.

Telephone inquiries should be directed to the undersigned at (571) 272-3226.

Andrea Smith
Petitions Examiner
Office of Petitions

UNITED STATES PATENT AND TRADEMARK OFFICE

Commissioner for Patents
United States Patent and Trademark Office
P.O. Box 1450
Alexandria, VA 22313-1450
www.uspto.gov

VENABLE LLP
P.O. BOX 34385
WASHINGTON, DC 20043-9998

MAILED
AUG 30 2010
OFFICE OF PETITIONS

In re Application of
Amar Lulla, et al.
Application No. 10/686,517
Filed: October 16, 2003
Attorney Docket No. 33396-198024

DECISION ON PETITION

This is a decision on the petition under the unintentional provisions of 37 CFR 1.137(b), filed August 5, 2010, to revive the above-identified application.

The application became abandoned for failure to reply in a timely manner to the non-final Office action mailed, June 9, 2008, which set a shortened statutory period for reply of three (3) months. No extensions of time under the provisions of 37 CFR 1.136(a) were obtained. Accordingly, the application became abandoned on September 10, 2008.

The petition satisfies the requirements of 37 CFR 1.137(b) in that petitioner has supplied (1) the reply in the form of an amendment, (2) the petition fee of $1620, and (3) a proper statement of unintentional delay.

In view of the above, the petition is **GRANTED**.

Telephone inquiries concerning this decision should be directed to undersigned at (571) 272-1642. All other inquiries concerning the examination or status of this application should be directed to the Technology Center.

This application is being referred to Technology Center AU 1618 for appropriate action by the Examiner in the normal course of business on the reply received August 5, 2010.

April M. Wise
Petitions Examiner
Office of Petitions

UNITED STATES PATENT AND TRADEMARK OFFICE

UNITED STATES DEPARTMENT OF COMMERCE
United States Patent and Trademark Office
Address: COMMISSIONER FOR PATENTS
P.O. Box 1450
Alexandria, Virginia 22313-1450
www.uspto.gov

APPLICATION NO.	FILING DATE	FIRST NAMED INVENTOR	ATTORNEY DOCKET NO.	CONFIRMATION NO.
10/686,751	10/16/2003	Michael R. Furst	A2484KUSNP/XERZ201274US01	8683

62095 7590 05/25/2011
FAY SHARPE / XEROX - ROCHESTER
1228 EUCLID AVENUE, 5TH FLOOR
THE HALLE BUILDING
CLEVELAND, OH 44115

EXAMINER
ESKANDARNIA, ARVIN

ART UNIT	PAPER NUMBER
2453	

MAIL DATE	DELIVERY MODE
05/25/2011	PAPER

Please find below and/or attached an Office communication concerning this application or proceeding.

The time period for reply, if any, is set in the attached communication.

UNITED STATES PATENT AND TRADEMARK OFFICE

Commissioner for Patents
United States Patent and Trademark Office
P.O. Box 1450
Alexandria, VA 22313-1450
www.uspto.gov

Patrick Roche
Fay Sharpe/Xerox-Rochester
The Halle building Fifth Floor
1228 Euclid Avenue
Cleveland, OH 44115

In re Application of:
Furst et al.
Application No. 10/686751
Filed: October, 2003
For: Method and Apparatus for Enabling Distributed Subscription Services, Supplies Maintenance, and Device-Independent Service Implementation

DECISION ON PETITION
UNDER 37 C.F.R. § 1.181

This is a decision on the petition filed May 6, 2011 under 37 CFR § 1.181 to invoke Supervisory Authority of the Commissioner and require the Examiner to withdraw the finality of the rejection mailed February 16, 2011.

The Applicant's counsel filed a petition to the Director under 37 CFR § 1.181 to seek relief from actions of the Examiner in relation to the Final Office Action February 16, 2011. In the petition, Applicant's counsel alleged that the finality of the office action was improper because the final office action was not completely responsive to applicant's remarks.

A review of the file indicates that the petition is premature and untimely. A request for relief under 37 CFR § 1.181 should only happen after a request for reconsideration has occurred and the examiner has maintained their position and that relief should be asked for within 2 months of the examiners action. The file indicates that no request for reconsideration on the finality of the February office action has occurred.

Accordingly, the petition is **Dismissed.**

The file is being forwarded to the examiner to treat substance of the petition as a request for reconsideration of the finality of the February office action. When the examiner responses to the May 12, 2011, after final submission, the substance of the petition will also be treated.

Any inquiry concerning this decision should be directed to Tod Swann at (571) 272-3612.
A second point of contact is Kim Huynh whose number is (571) 272-4147.

Tod Swann
WQAS/Technology Center 2400
Computer Architecture, Software, and
Information Security

UNITED STATES PATENT AND TRADEMARK OFFICE

Commissioner for Patents
United States Patent and Trademark Office
P.O. Box 1450
Alexandria, VA 22313-1450
www.uspto.gov

CHOATE, HALL & STEWART LLP
TWO INTERNATIONAL PLACE
BOSTON MA 02110

MAILED
AUG 18 2010
OFFICE OF PETITIONS

In re Patent No. 7,678,759	:	DECISION
SONTHEIMER et al.	:	DISMISSING REQUEST FOR
Issue Date: May 16, 2010	:	RECONSIDERATION OF PATENT
Application No. 10/686,782	:	TERM ADJUSTMENT
Filed: October 17, 2003	:	UNDER 37 CFR 1.705(d)
Attorney Docket No. 2006636-0064	:	

This is a decision on the petition filed on May 17, 2010, which is being treated as a petition under 37 CFR 1.705(d) requesting that the patent term adjustment indicated on the above-identified patent be corrected to indicate that the term of the above-identified patent is extended or adjusted by six hundred thirty-eight (638) days.

The petition to correct the patent term adjustment indicated on the above-identified patent is **DISMISSED** with respect to making any change in the patent term adjustment determination under 35 U.S.C. 154(b) of four hundred seventy-eight (478) days.

Patentee is given **TWO (2) MONTHS** from the mailing date of this decision to respond. No extensions of time will be granted under 37 CFR 1.136.

Patentee acknowledges 468 days of A delay, 209 days of applicant delay, and 0 days of overlap. However, patentee's calculation of the number of days of B delay is incorrect.

As the period from the filing date of the request for continued examination (RCE) to the issue date of the patent is not included in the B delay period, the over three year period

begins on October 18, 2006, and ends on October 30, 2007, the day before the RCE was filed, and is 378 (not 379) days. See 35 U.S.C. 154(b)(1)(B)(i). Further, the Office notes that patentee failed to account for the filing of the notice of appeal on May 25, 2007. The Office reminds patentee that the period consumed by appellate review, whether successful or not, is excluded from the calculation of B delay. See 35 U.S.C. 154(b)(1)(B)(ii).

In this instance, the period consumed by appellate review is 159 days, beginning on the date on which the notice of appeal to the Board of Patent Appeals and Interferences was filed, May 25, 2007, and ending on the day before the filing of the RCE, October 30, 2007. Thus, B delay is 219 days (378 - 159).

Accordingly, the patent term adjustment is 478 days (468 days of A delay + 219 days of B delay - 209 days of applicant delay).

In view thereof, no change will be made in the revised determination of patent term adjustment at the time of the issuance of the patent.

Nothing in this decision shall be construed as a waiver of the requirement of 35 U.S.C. 154(b)(4) that any civil action by an applicant dissatisfied with a determination made by the Director under 35 U.S.C. 154(b)(3) be filed in the United States District Court for the District of Columbia within 180 days after the grant of the patent.

The Office acknowledges submission of the $200.00 fee set forth in 37 CFR 1.18(e). No additional fees are required.

Telephone inquiries specific to this matter should be directed to the undersigned at (571) 272-3211.

Christina Tartera Donnell

Christina Tartera Donnell
Senior Petitions Attorney
Office of Petitions

UNITED STATES PATENT AND TRADEMARK OFFICE

Commissioner for Patents
United States Patent and Trademark Office
P.O. Box 1450
Alexandria, VA 22313-1450
www.uspto.gov

MAILED

DEC 06 2010

OFFICE OF PETITIONS

CHOATE, HALL & STEWART LLP
TWO INTERNATIONAL PLACE
BOSTON MA 02110

In re Patent No. 7,678,759	:	DECISION
SONTHEIMER et al.	:	DISMISSING REQUEST FOR
Issue Date: May 16, 2010	:	RECONSIDERATION OF PATENT
Application No. 10/686,782	:	TERM ADJUSTMENT
Filed: October 17, 2003	:	UNDER 37 CFR 1.705(d)
Attorney Docket No. 2006636-0064	:	

This is a decision on the RESPONSE TO DECISION DISMISSING REQUEST FOR RECONSIDERATION OF PATENT TERM ADJUSTMENT UNDER 37 C.F.R. § 1.705(d), filed October 14, 2010, which is being treated as a petition under 37 CFR 1.705(d) requesting that the patent term adjustment indicated on the above-identified patent be corrected to indicate that the term of the above-identified patent is extended or adjusted by six hundred seventeen (617) days.

The petition to correct the patent term adjustment indicated on the above-identified patent is **DISMISSED** with respect to making any change in the patent term adjustment determination under 35 U.S.C. 154(b). Patentee is given **TWO (2) MONTHS** from the mailing date of this decision to respond. No extensions of time will be granted under 37 CFR 1.136.

Patentee disputes the B delay period. Specifically, patentee asserts:

> A notice of appeal was filed on May 25, 2007. The Office takes the position that the period of time from the filing of the notice of appeal until the day before the filing of the RCE (i.e., May 25, 2007 until October 30, 2007, inclusive of endpoints) should be deducted from the time period calculated in part (1) above. This time

> period is equivalent to 159 days. In support of this position, the Office cites 35 U.S.C. 154(b)(1)(B)(ii), which provides that "any time consumed by appellate review by the Board of Patent Appeals and Interferences or by a Federal Court" (emphases added) is excluded from the calculation of B delay. However, appellate review does not commence upon the filing of a notice of appeal, but rather, upon the filing of an Examiner's reply to the applicant's Appeal Brief. No time was consumed by appellate review because no Examiner's reply had been filed. Thus, the time period from May 25, 2007 until October 30, 2007 should not be excluded from the calculation of B delay.

Petition, p. 2.

Patentee assertion is without merit. That is, patentee incorrectly calculated the period consumed by appellate review. The Office reminds patentee that the period consumed by appellate review, whether successful or not, is excluded from the calculation of B delay. See 35 U.S.C. 154(b)(1)(B)(ii).

Pursuant to 37 CFR 1.703:

> (b) The period of adjustment under § 1.702(b) is the number of days, if any, in the period beginning on the day after the date that is three years after the date on which the application was filed under 35 U.S.C. 111(a) or the national stage commenced under 35 U.S.C. 371(b) or (f) in an international application and ending on the date a patent was issued, but not including the sum of the following periods:
>
> > (4) The number of days, if any, in the period beginning on the date on which a notice of appeal to the Board of Patent Appeals and Interferences was filed under 35 U.S.C. 134 and § 41.31 of this title and ending on the date of the last decision by the Board of Patent Appeals and Interferences or by a Federal court in an appeal under 35 U.S.C. 141 or a civil action under 35 U.S.C. 145, or on the date of mailing of either an action under 35 U.S.C. 132, or a notice of allowance under 35 U.S.C. 151, whichever occurs first, if the appeal did not

result in a decision by the Board of Patent Appeals and Interferences.

In this instance, the period consumed by appellate review is 159 days, beginning on the date on which the notice of appeal to the Board of Patent Appeals and Interferences was filed, May 25, 2007, and ending on the day before the filing of the RCE, October 30, 2007. Thus, B delay is 219 days (378 - 159).

Accordingly, the patent term adjustment is 478 days (468 days of A delay + 219 days of B delay - 209 days of applicant delay).

In view thereof, no change will be made in the revised determination of patent term adjustment at the time of the issuance of the patent.

Nothing in this decision shall be construed as a waiver of the requirement of 35 U.S.C. 154(b)(4) that any civil action by an applicant dissatisfied with a determination made by the Director under 35 U.S.C. 154(b)(3) be filed in the United States District Court for the District of Columbia within 180 days after the grant of the patent.

The Office acknowledges the previous submission of the $200.00 fee set forth in 37 CFR 1.18(e). No additional fees are required.

Telephone inquiries specific to this matter should be directed to the undersigned at (571) 272-3211.

Christina Tartera Donnell

Christina Tartera Donnell
Senior Petitions Attorney
Office of Petitions

UNITED STATES PATENT AND TRADEMARK OFFICE

Commissioner for Patents
United States Patent and Trademark Office
P.O. Box 1450
Alexandria, VA 22313-1450
www.uspto.gov

MAILED

JUL 14 2011

OFFICE OF PETITIONS

CHOATE, HALL & STEWART LLP
TWO INTERNATIONAL PLACE
BOSTON MA 02110

In re Patent No. 7,678,759	:	DECISION
SONTHEIMER et al.	:	DISMISSING REQUEST FOR
Issue Date: May 16, 2010	:	RECONSIDERATION OF PATENT
Application No. 10/686,782	:	TERM ADJUSTMENT
Filed: October 17, 2003	:	UNDER 37 CFR 1.705(d)
Attorney Docket No. 2006636-0064	:	

This is a decision on the renewed petition filed on Monday, February 7, 2011,[1] which is being treated as a petition under 37 CFR 1.705(d) requesting that the patent term adjustment indicated on the above-identified patent be corrected to indicate that the term of the above-identified patent is extended or adjusted by six hundred seventeen (617) days.

The petition to correct the patent term adjustment indicated on the above-identified patent is **DISMISSED.**

Patentee's dispute the period of time excluded from B delay for appellate review. Patentee's argument has been considered, but not found persuasive. The period consumed by appellate review, whether successful or not, is excluded from the calculation of B delay. See 35 U.S.C. 154(b)(1)(B)(ii). An appeal to the Board of Patent Appeals and Interferences commences with the filing of a notice of appeal. See 35 U.S.C. 134(a). Generally, an appeal to the Board of Patent Appeals and Interferences ends with either 1) a Board decision, 2) the examiner reopening prosecution and issuing another Office action, or 3) the applicant filing a request to withdraw the appeal and reopen

[1] This petition was timely filed within two months of the decision on the request for reconsideration of patent term adjustment mailed December 6, 2010.

prosecution (e.g. the filing of a request for continued examination). In this instance the period consumed by appellate review is one hundred fifty-nine (159) days, beginning on May 25, 2007, the date of filing of the notice of appeal and ending on October 30, 2007, the day before the filing of the RCE. Thus, B delay is two hundred nineteen (219) days.

It is noted that the Office issued a Notice of proposed rulemaking entitled *Revision of Patent Term Extension and Adjustment Provisions Relating to Appellate Review and Information Disclosure Statements*, 76 FR 18990 (April 6, 2011). To the extent that the final rule on *Revision of Patent Term Extension and Adjustment Provisions Relating to Appellate Review* revises the interpretation of appellate review applied in this decision, Patentees are given **one (1) month or thirty (30) days**, whichever is longer, from the date of the final rule to file a request for reconsideration. No extensions of time will be granted under § 1.136.

Nothing in this decision shall be construed as a waiver of the requirement of 35 U.S.C. 154(b)(4) that any civil action by an applicant dissatisfied with a determination made by the Director under 35 U.S.C. 154(b)(3) be filed in the United States District Court for the District of Columbia within 180 days after the grant of the patent.

Telephone inquiries specific to this matter should be directed to the undersigned at (571) 272-3211.

C. T. Donnell

Christina Tartera Donnell
Senior Petitions Attorney
Office of Petitions

UNITED STATES PATENT AND TRADEMARK OFFICE

Commissioner for Patents
United States Patent and Trademark Office
P.O. Box 1450
Alexandria, VA 22313-1450
www.uspto.gov

Martin Moynihan
PRTSI Inc
P O Box16446
Arlington VA 22215

MAILED
OCT 25 2010
OFFICE OF PETITIONS

In re Application of	:	
Erez Yahalomi	:	
Application No. 10/686,914	:	ON PETITION
Filed: October 14, 2003	:	
	:	

This is a decision on the petition under the unintentional provisions of 37 CFR 1.137(b), filed September 27, 2010, to revive the above-identified application.

The petition is **DISMISSED**.

Any request for reconsideration of this decision must be submitted within TWO (2) MONTHS from the mail date of this decision. Extensions of time under 37 CFR 1.136(a) are permitted. The reconsideration request should include a cover letter entitled "Renewed Petition under 37 CFR 1.137(b)." This is **not** a final agency action within the meaning of 5 U.S.C. § 704.

The application became abandoned for failure to timely reply within the meaning of 37 CFR 1.113 to the final Office action, mailed April 5, 2006, which set a shortened statutory period for reply of three (3) months. A two (2) month extension of time under the provisions of 37 CFR 1.136(a) were obtained. Accordingly, the application became abandoned on September 6, 2006. The Notice of Abandonment was mailed March 27, 2007.

A grantable petition under 37 CFR 1.137(b) must be accompanied by: (1) the required reply, unless previously filed; (2) the petition fee as set forth in 37 CFR 1.17(m); (3) a statement that the entire delay in filing the required reply from the due date for the reply until the filing of a grantable petition pursuant to 37 CFR 1.137(b) was unintentional; and (4) any terminal disclaimer (and fee as set forth in 37 CFR 1.20(d)) required by 37 CFR 1.137(d). Where there is a question as to whether either the abandonment or the delay in filing a petition under 37 CFR 1.137 was unintentional, the Director may require additional information. See MPEP 711.03(c)(II)(C) and (D). The instant petition lacks item(s) (1).

At to Item 1:

The Request for Continued Examination (RCE) was not submitted with the appropriate fee. The appropriate fee is $405 to have the RCE considered.

The application file does not indicate a change of address has been filed in this case, although the address given on the petition differs from the address of record. A change of address should be filed in this case in accordance with MPEP 601.03. A courtesy copy of this decision is being mailed to the address noted on the petition. However, until otherwise instructed, all future correspondence regarding this application will be mailed solely to the address of record.

Further correspondence with respect to this matter should be addressed as follows:

By Mail: Mail Stop PETITION
Commissioner for Patents
P. O. Box 1450
Alexandria, VA 22313-1450

By hand: U. S. Patent and Trademark Office
Customer Service Window, Mail Stop Petitions
Randolph Building
401 Dulany Street
Alexandria, VA 22314

The centralized facsimile number is **(571) 273-8300.**

Telephone inquiries concerning this decision should be directed to the undersigned at (571) 272-2991.

/Terri Johnson/
Terri Johnson
Petitions Examiner
Office of Petitions

cc: **Erez Yahalomi**
Tarpad 8
Ramat Hasharon
Israel

UNITED STATES PATENT AND TRADEMARK OFFICE

Commissioner for Patents
United States Patent and Trademark Office
P.O. Box 1450
Alexandria, VA 22313-1450
www.uspto.gov

FOLEY & LARDNER LLP
777 EAST WISCONSIN AVENUE
MILWAUKEE WI 53202-5306

MAILED

SEP 2 0 2010

OFFICE OF PETITIONS

In re Application of	:	
Patrick J. Sweeney	:	
Application No. 10/686,998	:	ON REQUEST FOR
Filed: October 16, 2003	:	RECONSIDERATION OF
Attorney Docket Number: 029815-0103	:	PATENT TERM ADJUSTMENT

This is a decision on the petition under 37 CFR 1.705(b), filed May 14, 2010. Applicant believes that he should be accorded an additional PTA of 115 days. Applicant requests this correction solely on the basis that the Office will take in excess of three years to issue this patent.

As the instant application for patent term adjustment requests reconsideration of the patent term adjustment solely as it relates to the Office's failure to issue the patent within 3 years of the filing date, the application for patent term adjustment under 37 CFR 1.705(b) is **DISMISSED as PREMATURE**.

Knowledge of the actual date the patent issues is required to calculate the amount, if any, of additional patent term patentee is entitled to for Office failure to issue the patent within 3 years. See § 1.702(b). (This is true even where a request for continued examination (RCE) was filed). The computer will not undertake the § 1.702(b) calculation until the actual date of issuance of the patent has been determined. Likewise, the computer will not calculate any further Office delay under § 1.702(a)(4) or applicant delay under § 1.704(c)(10) until the actual date of issuance of the patent has been determined. As such, the Office can not make a determination on the correctness of the patent term adjustment until the patent has issued.

Requesting reconsideration of the patent term adjustment to be indicated on the patent under 37 CFR 1.705(b) based on the initial determination of patent term adjustment and a projected issuance date of the patent (or even the filing date of the request for continued examination) is premature. Accordingly, it is appropriate to dismiss as premature such a request.

Rather than file a request for reconsideration of patent term adjustment under 37 CFR 1.705(b) contesting the 37 CFR 1.702(b) calculation at the time of the mailing of the notice of allowance, applicants are advised that they may wait until the time of the issuance of the patent and file a request for reconsideration of the patent term adjustment pursuant to 37 CFR 1.705(d). As the USPTO does not calculate the amount of time earned pursuant to 37 CFR 1.702(b) until the time of the issuance of the patent, the Office will consider any request for reconsideration of the patent term adjustment due to an error in the calculation of 37 CFR 1.702(b) to be timely if the request for reconsideration is filed within two months of the issuance of the patent. However, as to all other bases for contesting the initial determination of patent term adjustment received with the notice of allowance, applicant must timely file an application for patent term adjustment prior to the payment of the issue fee[1].

In view thereof, the correct determination of PTA prior to issuance is **fifty-three (53) days** (176 days of PTO delay, reduced by 53 days of Applicant delay).

Receipt of the $200.00 fee set forth in 37 CFR 1.18(e) is acknowledged.

The application is being forwarded to the Office of Data Management for issuance of the patent.

Telephone inquiries specific to this decision should be directed to Petitions Attorney Cliff Congo at (571) 272-3207.

Anthony Knight
Director
Office of Petitions

---

[1] For example, if applicant disputes both the calculation of patent term adjustment under 37 CFR 1.702(a)(1) for Office failure to mail a first Office action or notice of allowance not later than fourteen months after the date on which the application was filed and under 37 CFR 1.702(b) for Office failure to issue a patent within three years of the actual filing date of the application, then applicant must still timely file an application for patent term adjustment prior to the payment of the issue fee to contest the calculation of Office delay in issuing a first Office action or notice of allowance. See 37 CFR 1.705(b) and 35 U.S.C. 154(b)(3)(B). A dispute as to the calculation of the §1.702(a)(1) period raised on request for reconsideration of patent term adjustment under 37 CFR 1.705(d) will be dismissed as untimely filed.

UNITED STATES PATENT AND TRADEMARK OFFICE

Commissioner for Patents
United States Patent and Trademark Office
P.O. Box 1450
Alexandria, VA 22313-1450
www.uspto.gov

MAILED
APR 04 2012
OFFICE OF PETITIONS

Gerald John (Jack) Lipovski
15017 Calaveras Drive
Austin, TX 78717

In re Patent No. 7,142,877	:	
Issue Date: November 28, 2006	:	
Application No. 10/687,024	:	ON PETITION
Filed: October 16, 2003	:	
Attorney Docket No. 0254-0003.03	:	

This is a decision on the petition under 37 CFR 1.378(c), filed February 10, 2012, to accept the unintentionally delayed payment of a maintenance fee for the above-identified patent.

The petition is **GRANTED**.

This patent expired on November 29, 2010 for failure to pay the three and one-half year maintenance fee. Since this petition was submitted within twenty-four months after the six-month grace period provided in 37 CFR 1.362(e), the petition was timely filed under the provisions of 37 CFR 1.378(c).

The maintenance fee is hereby accepted and the above-identified patent is reinstated as of the mail date of this decision.

The file does not indicate a change of address has been submitted, although the address given on the petition differs from the address of record. If appropriate, a change of fee address (form PTO/SB/47) and a request for customer number (form PTO/SB/125) should be filed in accordance with Manual of Patent Examining Procedure, section 2540. A courtesy copy of this decision is being mailed to the address on the petition. However, the Office will mail all future correspondence solely to the address of record.

Telephone inquiries concerning this decision should be directed to Terri Johnson at (571) 272-2991.

The patent file is being forwarded to Files Repository.

/Terri Johnson/
Terri Johnson
Petitions Examiner
Office of Petitions

UNITED STATES PATENT AND TRADEMARK OFFICE

Commissioner for Patents
United States Patent and Trademark Office
P.O. Box 1450
Alexandria, VA 22313-1450
www.uspto.gov

BANNER & WITCOFF, LTD
AND ATTORNEYS FOR CLIENT NUMBER 011738
10 SOUTH WACKER DRIVE
SUITE 3000
CHICAGO, IL 60606

MAILED
JUN 01 2011
OFFICE OF PETITIONS

In re Application of	:	
Osorio et al.	:	
Application No. 10/687,135	:	DECISION ON PETITION
Filed: October 15, 2003		TO WITHDRAW FROM RECORD
Attorney Docket No. 539.3167.1	:	
	:	

This is a decision on the Request to Withdraw as attorney or agent of record under 37 C.F.R. § 1.36(b), filed April 4, 2011.

The request is **NOT APPROVED** because it is moot.

A review of the file record indicates that on April 15, 2011 the power of attorney to Banner & Witcoff, LTD was revoked by the applicant of the patent application. Accordingly, the request to withdraw under 37 C.F.R. § 1.36(b) is moot.

All future communications from the Office will be directed to the below-listed address until otherwise notified by applicant.

Telephone inquires concerning this decision should be directed to the undersigned at 571-272- 7751. All other inquires concerning either the examination or status of the application should be directed to the Technology Center.

/Joan Olszewski/
Joan Olszewski
Petitions Examiner
Office of Petitions

cc: Fredrikson & Byron, P.A.
Intellectual Property Group, MDT Patents
200 South Sixth Street, Suite 4000
Minneapolis MN 55402

UNITED STATES PATENT AND TRADEMARK OFFICE

Commissioner for Patents
United States Patent and Trademark Office
P.O. Box 1450
Alexandria, VA 22313-1450
www.uspto.gov

ADVANTIA LAW GROUP
9035 SOUTH 1300 EAST
SUITE 200
SANDY UT 84094

MAILED

AUG 04 2011

OFFICE OF PETITIONS

In re Patent No. 7,094,181 :
Issue Date: August 22, 2006 :
Application No. 10/687,161 : ON PETITION
Filed: October 17, 2003 :
Attorney Docket No. **3201.2.3 CIP** :

This is a decision on the petition under 37 CFR 1.137(b) which is being treated as a petition under 37 CFR 1.378(c), filed July 14, 2011, to accept the delayed payment of a maintenance fee for the above-identified patent.

The petition is **DISMISSED**.

If reconsideration of this decision is desired, a petition for reconsideration under 37 CFR 1.378(e) must be filed within **TWO (2) MONTHS** from the mail date of this decision. No extension of this two-month time limit can be granted under 37 CFR 1.136(a) or (b). This is **not** a final agency action within the meaning of 5 U.S.C. § 704.

Any petition for reconsideration of this decision must be accompanied by the petition fee of $400 as set forth in 37 CFR 1.17(f). The petition for reconsideration must include the lacking item(s) noted below, since, after a decision on the petition for reconsideration, no further reconsideration or review of the matter will be undertaken by the Director.

A petition to accept the unintentionally delayed payment of a maintenance fee under 35 U.S.C. 41(c) and 37 CFR 1.378(c) must be accompanied by: (1) a statement that the delay was unintentional; (2) payment of the appropriate maintenance fee, unless previously submitted; (3) payment of the surcharge set forth in 37 CFR 1.20(i)(2). This petition lacks item (3) above.

This patent expired at midnight August 22, 2010, for failure to pay the 3½ year maintenance fee. Since this petition was submitted within twenty-four months after the six-month grace period provided in 37 CFR 1.362(e), the petition was timely filed under the provisions of 37 CFR 1.378(c). Petitioner has submitted fees totaling $1,310 ($490 for the 3½ year maintenance fee; $820 for the payment of the (petition) surcharge fee) with the instant petition. However, the amount required to reinstate the patent is $2,130 which includes $490 for payment of 3½ year maintenance fee and $1,640 for the surcharge fee required by 37 CFR 1.20(i)(2). Therefore, petitioner must submit $820 for the payment of the (petition) surcharge fee set forth in 37 CFR 1.20(i)(2) and $400 for the petition for reconsideration before this patent can be reinstated.

It is also noted that petitioner had submitted the incorrect petition form for reinstatement of the patent. The correct petition form for a Petition to accept Unintentionally Delayed Payment of Maintenance Fee in an Expired Patent (37 CFR 1.378(c) PTO/SB/66) is enclosed with a copy of this decision.

Further correspondence with respect to this matter should be addressed as follows:

By Mail: Mail Stop PETITION
Commissioner for Patents
Post Office Box 1450
Alexandria, VA 22313-1450

By hand: U. S. Patent and Trademark Office
Customer Service Window, Mail Stop Petitions
Randolph Building
401 Dulany Street
Alexandria, VA 22314

The centralized facsimile number is (571) 273-8300.

Telephone inquiries should be directed to the undersigned at (571)-272-4584.

JoAnne Burke
Petitions Examiner
Office of Petitions

cc: Michael W. Starkweather
P.O. Box 900547
Sandy, UT 84090-057

UNITED STATES PATENT AND TRADEMARK OFFICE

Commissioner for Patents
United States Patent and Trademark Office
P.O. Box 1450
Alexandria, VA 22313-1450
www.uspto.gov

ADVANTIA LAW GROUP
P.O.Box 900547
SANDY UT 84090

MAILED

OCT 19 2011

OFFICE OF PETITIONS

In re Patent No. 7,094,181 :
Issue Date: August 22, 2006 :
Application No. 10/687,161 : ON PETITION
Filed: October 17, 2003 :
Attorney Docket No. **3201.2.3 CIP** :

This is a decision on the renewed petition under 37 CFR 1.378(c), filed October 4, 2011, to accept the unintentionally delayed payment of a maintenance fee for the above-identified patent.

This patent expired at midnight August 22, 2010, for failure to pay the 3½ year maintenance fee. Since this petition was submitted within twenty-four months after the six-month grace period provided in 37 CFR 1.362(e), the petition was timely filed under the provisions of 37 CFR 1.378(c).

A petition to accept the unintentionally delayed payment of a maintenance fee under 35 U.S.C. 41(c) and 37 CFR 1.378(c) must be accompanied by: (1) a statement that the delay was unintentional; (2) payment of the appropriate maintenance fee, unless previously submitted; (3) payment of the surcharge set forth in 37 CFR 1.20(i)(2). This petition lacks item (3) above.

The petition is **GRANTED**.

The maintenance fee is hereby accepted and the above-identified patent is reinstated as of the mail date of this decision.

Telephone inquiries concerning this decision should be directed to JoAnne Burke at (571) 272-4584.

JoAnne Burke
Petitions Examiner
Office of Petitions

UNITED STATES PATENT AND TRADEMARK OFFICE

UNITED STATES DEPARTMENT OF COMMERCE
United States Patent and Trademark Office
Address: COMMISSIONER FOR PATENTS
P.O. Box 1450
Alexandria, Virginia 22313-1450
www.uspto.gov

APPLICATION NO.	FILING DATE	FIRST NAMED INVENTOR	ATTORNEY DOCKET NO.	CONFIRMATION NO.
10/687,226	10/15/2003	Gregory B. Hale	58085-010203	8102

46560 7590 01/12/2012
THE WALT DISNEY COMPANY
C/O GREENBERG TRAURIG LLP
The Tabor Center, 1200 17th Street
Suite 2400
Denver, CO 80202

EXAMINER
HAIDER, FAWAAD

ART UNIT	PAPER NUMBER
3627	

NOTIFICATION DATE	DELIVERY MODE
01/12/2012	ELECTRONIC

Please find below and/or attached an Office communication concerning this application or proceeding.

The time period for reply, if any, is set in the attached communication.

Notice of the Office communication was sent electronically on above-indicated "Notification Date" to the following e-mail address(es):

DENIPMail@gtlaw.com
clairt@gtlaw.com
corp.patent.docketing@disney.com

UNITED STATES PATENT AND TRADEMARK OFFICE

Commissioner for Patents
United States Patent and Trademark Office
P.O. Box 1450
Alexandria, VA 22313-1450
www.uspto.gov

THE WALT DISNEY COMPANY
C/O GREENBERG TRAURIG LLP
The Tabor Center, 1200 17th Street
Suite 2400
Denver, CO 80202

In re Application of Hale, Gregory B.	:	
Appl. No.:10/687,226	:	**RESPONSE TO PETITION**
Filed: October 15, 2003	:	**TO EXPUNGE FILED**
For: **MANAGEMENT OF THE FLOW OF PERSONS**	:	**UNDER 37 CFR 1.59(b)**
IN RELATION TO CENTERS OF CROWD	:	
CONCENTRATION VIA TELEVISION CONTROL	:	

This is a decision on the petition under 37 CFR 1.59(b), filed March 16, 2006, to expunge information from the above identified application.

The petition is **dismissed**.

Petitioner requests that i) Letter dated 01-05-1991, 4 pages (included in Envelope A), and ii) Letter dated 01-30-1991, 2pages (included in Envelope A) filed March 16, 2006, be expunged from the record.

A petition under 37 CFR 1.59(b) must contain:

(A) a clear identification of the information to be expunged without disclosure of the details thereof;
(B) a clear statement that the information to be expunged is trade secret material, proprietary material, and/or subject to a protective order, and that the information has not been otherwise made public;
(C) a commitment on the part of the petitioner to retain such information for the period of any patent with regard to which such information is submitted;
(D) a statement that the petition to expunge is being submitted by, or on behalf of, the party in interest who originally submitted the information;
(E) the fee as set forth in 37 CFR 1.17(g) for a petition under 37 CFR 1.59(b).

Additionally, a petition to expunge information under 37 CFR 1.59(b) will only be granted if the information has been deemed to not be material to patentability. If the information is found to be material to patentability, any petition to expunge the information will be denied.

A review of the record shows that applicant's petition was filed at the time the information was submitted and meets criteria (A), (C), (D), and (E) of the above requirements. However, the Petitioner has failed to meet criteria (B) of these requirements because the petition fails to clearly state that the information has not been otherwise made public. Instead, the petition states that the information "has not been otherwise made public once received" (emphasis added) which fails to clearly state that the information has not been otherwise made public.

Additionally, the information sought to be expunged from the record has been deemed to be material to patentability, which is defined as any information which the examiner considers as being important to determination of patentability of the claims.

Any questions or comments with respect to this decision should be directed to Supervisory Patent Examiner F. Ryan Zeender at (571) 272-6790.

Wynn Coggins, Director
Patent Technology Center 3600
(571) 272-5350

WC/FZ: 12/23/2011

LM

UNITED STATES PATENT AND TRADEMARK OFFICE

Commissioner for Patents
United States Patent and Trademark Office
P.O. Box 1450
Alexandria, VA 22313-1450
www.uspto.gov

BANNER & WITCOFF, LTD
AND ATTORNEYS FOR CLIENT NUMBER 011738
10 SOUTH WACKER DRIVE
SUITE 3000
CHICAGO, IL 60606

MAILED
MAY 31 2011
OFFICE OF PETITIONS

In re Application of	:	
Osorio et al.	:	
Application No. 10/687,289	:	DECISION ON PETITION
Filed: October 15, 2003		TO WITHDRAW FROM RECORD
Attorney Docket No. 539.3164.1	:	
	:	

This is a decision on the Request to Withdraw as attorney or agent of record under 37 C.F.R. § 1.36(b), filed April 5, 2011.

The request is **NOT APPROVED** because it is moot.

A review of the file record indicates that on April 18, 2011 the power of attorney to Banner & Witcoff, LTD was revoked by the applicant of the patent application. Accordingly, the request to withdraw under 37 C.F.R. § 1.36(b) is moot.

All future communications from the Office will be directed to the below-listed address until otherwise notified by applicant.

Telephone inquires concerning this decision should be directed to the undersigned at 571-272- 7751. All other inquires concerning either the examination or status of the application should be directed to the Technology Center.

/Joan Olszewski/
Joan Olszewski
Petitions Examiner
Office of Petitions

cc: Fredrikson & Byron, P.A.
Intellectual Property Group, MDT Patents
200 South Sixth Street, Suite 4000
Minneapolis MN 55402

UNITED STATES PATENT AND TRADEMARK OFFICE

Commissioner for Patents
United States Patent and Trademark Office
P.O. Box 1450
Alexandria, VA 22313-1450
www.uspto.gov

Pearl Cohen Zedek Latzer, LLP
1500 Broadway
12th Floor
New York NY 10036

MAILED

AUG 10 2010

OFFICE OF PETITIONS

In re Application of	:	
KILCOYNE et al.	:	
Application No. 10/687,336	:	DECISION ON PETITION
Filed: 10/16/2003	:	
Attorney Docket No. P-71486-US2	:	

This is a decision on the petition under 37 CFR 1.137(b), filed March 10, 2010, to revive the above-identified application.

The petition is **GRANTED**.

The application became abandoned for failure to timely and proper reply within the meaning of 37 CFR 1.113 to the final Office action mailed June 11, 2009, which set a shortened statutory period for reply of three (3) months. No extensions of time under the provisions of 37 CFR 1.136(a) were obtained. Accordingly, the application became abandoned on September 12, 2009. A Notice of Abandonment was mailed on December 23, 2009.

The petition satisfies the requirements of 37 CFR 1.137(b) in that applicant has supplied (1) the reply in the form of a RCE, the RCE fee, and the submission required by 37 CFR 1.114; (2) the petition fee; and (3) a proper statement of unintentional delay.

Telephone inquiries concerning this decision should be directed to the undersigned at (571) 272-3211.

This application is being referred to Technology Center AU 3736 for processing of the RCE and for appropriate action by the Examiner on the amendment submitted in accordance with 37 CFR 1.114.

C. T. Donnell

Christina Tartera Donnell
Senior Petitions Attorney
Office of Petitions

UNITED STATES PATENT AND TRADEMARK OFFICE

Commissioner for Patents
United States Patent and Trademark Office
P.O. Box 1450
Alexandria, VA 22313-1450
www.uspto.gov

BANNER & WITCOFF, LTD
AND ATTORNEYS FOR CLIENT NUMBER 011738
10 SOUTH WACKER DRIVE
SUITE 3000
CHICAGO, IL 60606

MAILED
MAY 24 2011
OFFICE OF PETITIONS

In re Application of Osorio et al. Application No. 10/687,344 Filed: October 15, 2003 Attorney Docket No. 539.3169.1	: : : : :	DECISION ON PETITION TO WITHDRAW FROM RECORD

This is a decision on the Request to Withdraw as attorney or agent of record under 37 C.F.R. § 1.36(b), filed April 4, 2011.

The request is **NOT APPROVED** because it is moot.

A review of the file record indicates that on April 15, 2011 the power of attorney to Banner & Witcoff, LTD was revoked by the applicant of the patent application. Accordingly, the request to withdraw under 37 C.F.R. § 1.36(b) is moot.

All future communications from the Office will be directed to the below-listed address until otherwise notified by applicant.

Telephone inquires concerning this decision should be directed to the undersigned at 571-272- 7751. All other inquires concerning either the examination or status of the application should be directed to the Technology Center.

/Joan Olszewski/
Joan Olszewski
Petitions Examiner
Office of Petitions

cc: Fredrikson & Byron, P.A.
Intellectual Property Group, MDT Patents
200 South Sixth Street, Suite 4000
Minneapolis MN 55402

UNITED STATES PATENT AND TRADEMARK OFFICE

Commissioner for Patents
United States Patent and Trademark Office
P.O. Box 1450
Alexandria, VA 22313-1450
www.uspto.gov

MAILED
MAY 20 2011
OFFICE OF PETITIONS

BANNER & WITCOFF, LTD
AND ATTORNEYS FOR CLIENT NUMBER 011738
10 SOUTH WACKER DRIVE
SUITE 3000
CHICAGO, IL 60606

In re Application of	:	
OSORIO, et al	:	
Application No. 10/687,389	:	DECISION ON PETITION
Filed: October 15, 2003	:	TO WITHDRAW
Attorney Docket No. 539.3175.1	:	FROM RECORD
	:	

This is a decision on the Request to Withdraw as attorney or agent of record under 37 C.F.R. § 1.36(b), filed April 4, 2011.

The request is **NOT APPROVED** because it is moot.

A review of the file record indicates that the power of attorney to Robert H. Resis, has been revoked by the assignee of the patent application on April 7, 2011. Accordingly, the request to withdraw under 37 C.F.R. § 1.36(b) is moot.

Telephone inquires concerning this decision should be directed to undersigned at (571) 272-6735.

/Diane Goodwyn/
Diane Goodwyn
Petitions Examiner
Office of Petitions

UNITED STATES PATENT AND TRADEMARK OFFICE

Commissioner for Patents
United States Patent and Trademark Office
P.O. Box 1450
Alexandria, VA 22313-1450
www.uspto.gov

FITCH, EVEN, TABIN & FLANNERY, LLP
120 SOUTH LASALLE STREET
SUITE 1600
CHICAGO IL 60603-3406

MAILED

APR 18 2012

OFFICE OF PETITIONS

In re Application	:
Lin Wang et al.	:
Application No. 10/687,471	: DECISION ON APPLICATION
Filed: October 15, 2003	: FOR PATENT TERM ADJUSTMENT
Attorney Docket No. **8970-95071-US**	:

This is in response to the REQUEST FOR RECONSIDERATION OF PATENT TERM ADJUSTMENT UNDER 37 C.F.R. § 1.705(b) filed March 2, 2012. Applicant requests that the determination of patent term adjustment be corrected from 1768 days to 2158 days.

The application for patent term adjustment is **GRANTED** to the extent indicated herein.

The Office has updated the PAIR screen to reflect that the correct Patent Term Adjustment (PTA) determination at the time of the mailing of the Notice of Allowance is **TWO THOUSAND ONE HUNDRED FIFTY-EIGHT (2158)** days. A copy of the updated PAIR screen, showing the correct determination, is enclosed.

On February 21, 2012, the Office mailed the Determination of Patent Term Adjustment under 35 U.S.C. 154(b) in the above-identified application. The Notice stated that the patent term adjustment to date is 1765 days. The instant application for patent term adjustment was timely filed[1] on or before payment of the issue fee.

With respect to the patent term adjustment at the time of the mailing of the notice of allowance, applicants do not dispute 2175 days of Examination delay pursuant to 37 CFR 1.702(a)(1) and 37 CFR 1.702(a)(1) or 17 days of Applicant delay. However, with respect to the patent term adjustment at the time of the mailing of the notice of allowance, "Applicants believe that the Patent Office has incorrectly attributed a total of 410 days as Applicant Delays when this number should actually be only 17 days. Applicants filed the present application on October 15, 2003. On January 26, 2004, a Notice of Incomplete Nonprovisional Application was mailed by the Patent Office. On March 19, 2004, Applicants filed a Petition requesting withdrawal of the Notice of Incomplete Nonprovisional Application and according a filing date of October 15, 2003 for the Application. On May 24, 2004, the Office of Petitions issued a Decision granting

[1] PALM records indicate that the issue fee has not been paid yet.

the Petition and indicated that the Notice of Incomplete Nonprovisional Application was mailed in error such that it was withdrawn. Therefore, there was no Applicant Delay as the Notice of Incomplete Nonprovisional Application was mailed in error."

Applicant's arguments have been considered. Applicant's are correct, there is no basis for a reduction of 393 days as Applicant filed a complete reply in the form of a petition to the Notice within 3 months. A favorable decision on the petition was mailed on May 24, 2005. Thus, no action by applicant warranting entry of a period of reduction occurred on May 24, 2005.

In view thereof, it is concluded that the determination of patent term adjustment at the time of the mailing of the Notice of Allowance is 2158 days (2175 Examination delay days minus 17 Applicant delay days)

The Office acknowledges submission of the $200.00 fee set forth in 37 CFR 1.18(e) for consideration of the application for patent term adjustment under 37 CFR 1.705(b).

The application is being forwarded to the Office of Data Management for issuance of the patent. The patent term adjustment indicated on the patent (as shown on the Issue Notification mailed about three weeks prior to patent issuance) will include any additional adjustment accrued both for Office delay in issuing the patent more than four months after payment of the issue fee and satisfaction of all outstanding requirements, and for the Office taking in excess of three years to issue the patent (to the extent that the three-year period does not overlap with periods already accorded).

Telephone inquiries specific to this decision should be directed to the undersigned at (571) 272-3212.

Patricia Faison-Ball

Patricia Faison-Ball
Senior Petitions Attorney
Office of Petitions

Enclosure: Copy of Revised PTA calculation

Patent Term Adjustments

PTA/PTE Information | Patent Term Adjustment | Patent Term Extension

Application Number*: 10687471 Search | Explanation of PTA Calculation | Explanation of PTE Calculation

PTA Calculations for Application: 10687471

Application Filing Date	10/15/2003	OverLapping Days Between (A and B) or (A and C)	0
Issue Date of Patent		Non-Overlapping USPTO Delays:	2175
A Delays	1251	PTO Manual Adjustment	393
B Delays	0	Applicant Delay (APPL)	410
C Delays	924	Total PTA (days)	2158

* - Sorted Column

File Contents History

Action Number	Action Recorded Date	Action Due Date	Action Code	Action Description	Duration PTO	Duration APPL	Parent Action Number
104	04/17/2012		P028	Adjustment of PTA Calculation by PTO	393	0	
99	02/21/2012		MN/=.	Mail Notice of Allowance		0	
98	02/17/2012		OAR	Office Action Review		0	
97	02/17/2012		OAR	Office Action Review		0	
96	02/17/2012		IREV	Issue Revision Completed		0	
92	02/16/2012		OAR	Office Action Review		0	
91	02/16/2012		ACRE	Allowed Case Returned to the Examiner for Clerical Processing		0	
90	02/16/2012		DVER	Document Verification		0	
89	02/16/2012		N/=.	Notice of Allowance Data Verification Completed		0	
88	02/16/2012		EX.A	Examiner's Amendment Communication		0	
87	02/14/2012		CNTA	Allowability Notice		0	
86	01/10/2012		FWDX	Date Forwarded to Examiner		0	
85	01/06/2012		A.QU	Response after Ex Parte Quayle Action		0	
84	01/06/2012		C602	Oath or Declaration Filed (Including Supplemental)		0	
83	01/06/2012		MCTEQ	Mail Ex Parte Quayle Action (PTOL - 326)		0	
82	01/04/2012		OAR	Office Action Review		0	
81	01/03/2012		CTEQ	Quayle action		0	
80	12/06/2011		OAR	Office Action Review		0	
79	12/06/2011		OAR	Office Action Review		0	
73	09/28/2011	03/19/2009	MAPDR	Mail BPAI Decision on Appeal - Reversed	924	47	
72	09/27/2011		APDR	BPAI Decision - Examiner Reversed		0	
71	10/06/2010		DOCK	Case Docketed to Examiner in GAU		0	
68	02/22/2010		AP_DK_M	Docketing Notice Mailed to Appellant		0	
67	02/22/2010		APAS	Assignment of Appeal Number		0	
70	02/02/2010		LET.	Miscellaneous Incoming Letter		0	
66	02/01/2010		APWD	Appeal Awaiting BPAI Docketing		0	
65	01/27/2010		MRBNE	Mail Reply Brief Noted by Examiner		0	
64	01/25/2010		RBNE	Reply Brief Noted by Examiner		0	
63	01/22/2010		APRD	Order Returning Undocketed Appeal to the Examiner		0	
62	12/14/2009		APWD	Appeal Awaiting BPAI Docketing		0	
61	12/10/2009		ARBP	Appeal ready for BPAI review		0	
59	09/14/2009		PACC	Exam. Ans. Review Complete		0	
60	08/27/2009		LET.	Miscellaneous Incoming Letter		0	
58	08/27/2009		LET.	Miscellaneous Incoming Letter		0	
57	08/24/2009		MAPEA	Mail Examiner's Answer		0	
56	08/24/2009		APEA	Examiner's Answer to Appeal Brief		0	
55	06/19/2009		APBR	Appeal Brief Review Complete		0	
54	06/19/2009		FWDX	Date Forwarded to Examiner		0	
52	05/27/2009		PA..	Change in Power of Attorney (May Include Associate POA)		0	
51	05/22/2009		C.AD	Correspondence Address Change		0	
53	05/18/2009		AP.B	Appeal Brief Filed		0	
50	04/21/2009		MAPCP	Mail Appeals conf. Proceed to BPAI		0	
49	04/20/2009		APCP	Pre-Appeals Conference Decision - Proceed to BPAI		0	
48	03/19/2009		AP.C	Request for Pre-Appeal Conference Filed		0	
47	03/19/2009	03/02/2009	N/AP	Notice of Appeal Filed	17	41	
46	03/16/2009		MCTAV	Mail Advisory Action (PTOL - 303)		0	
45	03/15/2009		CTAV	Advisory Action (PTOL-303)		0	
44	03/06/2009		FWDX	Date Forwarded to Examiner		0	
43	03/05/2009		A.NE	Amendment after Final Rejection		0	
42	03/05/2009		XT/G	Request for Extension of Time - Granted		0	
41	12/02/2008		MCTFR	Mail Final Rejection (PTOL - 326)		0	
40	11/24/2008		CTFR	Final Rejection		0	
39	09/18/2008		FWDX	Date Forwarded to Examiner		0	
38	08/15/2008		A...	Response after Non-Final Action		0	
37	05/19/2008	12/15/2004	MCTNF	Mail Non-Final Rejection	1251	0.5	

36	05/12/2008		CTNF	Non-Final Rejection		0
32	04/09/2008		DOCK	Case Docketed to Examiner in GAU		0
31	02/25/2008		TI1050	Transfer Inquiry to GAU		0
30	01/23/2008		DOCK	Case Docketed to Examiner in GAU		0
29	01/22/2008		DOCK	Case Docketed to Examiner in GAU		0
28	12/06/2007		TI1050	Transfer Inquiry to GAU		0
27	08/17/2007		TI1050	Transfer Inquiry to GAU		0
26	07/24/2007		TI1050	Transfer Inquiry to GAU		0
25	07/21/2007		TI1050	Transfer Inquiry to GAU		0
24	05/18/2007		TI1050	Transfer Inquiry to GAU		0
23	08/29/2006		TSSCOMP	IFW TSS Processing by Tech Center Complete		0
18	10/26/2005		WROIPE	Application Return from OIPE		0
17	10/26/2005		COMP	Application Is Now Complete		0
16	10/26/2005		ROIPE	Application Return TO OIPE		0
15	10/26/2005		WROIPE	Application Return from OIPE		0
14	10/26/2005		COMP	Application Is Now Complete		0
13	10/26/2005		ROIPE	Application Return TO OIPE		0
12	08/12/2005		OIPE	Application Dispatched from OIPE		0
11	08/12/2005		COMP	Application Is Now Complete		0
10	05/24/2005	04/26/2004	ADDFLFEE	Additional Application Filing Fees	393	5
8	05/24/2004		MP010	Mail-Record Petition Decision of Granted Related to Filing Date		0
95	04/05/2004		IDSC	Information Disclosure Statement considered		0
93	04/05/2004		WIDS	Information Disclosure Statement (IDS) Filed		0
33	04/05/2004		IDSC	Information Disclosure Statement considered		0
22	04/05/2004		RCAP	Reference capture on IDS		0
21.7	04/05/2004		M844	Information Disclosure Statement (IDS) Filed		0
21	04/05/2004		WIDS	Information Disclosure Statement (IDS) Filed		0
20	03/19/2004		A.PE	Preliminary Amendment		0
7	03/19/2004		PET.	Petition Entered		0
5	01/26/2004		INC/	Notice of Incomplete Application - Filing Date Not Assigned		0
4	01/09/2004		L194	Cleared by OIPE CSR		0
3	01/09/2004		CLSS	CASE CLASSIFIED BY OIPE		0
2	12/02/2003		SCAN	IFW Scan & PACR Auto Security Review		0
19	10/15/2003		A.PE	Preliminary Amendment		0
9	10/15/2003		DRAWING	Drawing Preliminary Amendment		0
1	10/15/2003		IEXX	Initial Exam Team nn		0
0.5	10/15/2003		EFILE	Filing date		0

Export to: Excel

UNITED STATES PATENT AND TRADEMARK OFFICE

UNITED STATES DEPARTMENT OF COMMERCE
United States Patent and Trademark Office
Address: COMMISSIONER FOR PATENTS
P.O. Box 1450
Alexandria, Virginia 22313-1450
www.uspto.gov

APPLICATION NO.	FILING DATE	FIRST NAMED INVENTOR	ATTORNEY DOCKET NO.	CONFIRMATION NO.
10/687,526	10/16/2003	Bruce A. Littlefield	04520/029002	5226

78859 7590 12/22/2011
Clark & Elbing LLP / Eisai
101 Federal Street
Suite 1500
Boston, MA 02110

EXAMINER
COVINGTON, RAYMOND K

ART UNIT	PAPER NUMBER
1625	

NOTIFICATION DATE	DELIVERY MODE
12/22/2011	ELECTRONIC

Please find below and/or attached an Office communication concerning this application or proceeding.

The time period for reply, if any, is set in the attached communication.

Notice of the Office communication was sent electronically on above-indicated "Notification Date" to the following e-mail address(es):

patentadministrator@clarkelbing.com

UNITED STATES PATENT AND TRADEMARK OFFICE

COMMISSIONER FOR PATENTS
UNITED STATES PATENT AND TRADEMARK OFFICE
P.O. BOX 1450
ALEXANDRIA, VA 22313-1450
www.uspto.gov

In re Patent No. 7,470,720	:	
Issue Date: December 30, 2008	:	**DECISION GRANTING**
Appl No.: 10/687,526	:	**PETITION**
Filed: October 16, 2003	:	*37 CFR 1.324*
For: METHODS AND COMPOSITIONS FOR USE IN TREATING CANCER	:	

This is a decision on the petition filed April 17, 2011 to correct inventorship under 37 CFR 1.324.

The petition is granted.

The patented file is being forwarded to Certificate of Corrections Branch for issuance of a certificate naming only the actual inventor or inventors.

Andrew D. Kosar
Supervisory Patent Examiner
Art Unit 1622
Technology Center 1600

J. COOPER MCDONALD
CLARK & ELBING, LLP
101 FEDERAL STREET
BOSTON MA 02110

UNITED STATES PATENT AND TRADEMARK OFFICE

COMMISSIONER FOR PATENTS
UNITED STATES PATENT AND TRADEMARK OFFICE
P.O. BOX 1450
ALEXANDRIA, VA 22313-1450
www.uspto.gov

DATE: December 13, 2011
TO: Certificates of Correction Branch
FROM: Andrew D. Kosar
SPE, Art Unit 1622
SUBJECT: REQUEST FOR CERTIFICATE OF CORRECTION

Please issue a Certificate of Correction in U. S. Letters Patent No. 7,470,720 as specified on the attached Certificate.

Andrew D. Kosar, Supervisory Patent Examiner
Art Unit 1622

UNITED STATES PATENT AND TRADEMARK OFFICE

CERTIFICATE

Patent No. 7,470,720
Patented: December 30, 2008

On petition requesting issuance of a certificate for correction of inventorship pursuant to 35 U.S.C. 256, it has been found that the above identified patent, through error and without deceptive intent, improperly sets forth the inventorship. Accordingly, it is hereby certified that the correct inventorship of this patent is:

Bruce A. Littlefield, Monica H. Palme, Boris M. Seletsky, Murray J. Towle, Melvin J. Yu, and Wanjun Zheng

Andrew D. Kosar
Supervisory Patent Examiner
Art Unit 1622

UNITED STATES PATENT AND TRADEMARK OFFICE

Commissioner for Patents
United States Patent and Trademark Office
P.O. Box 1450
Alexandria, VA 22313-1450
www.uspto.gov

Paper No.

MAILED

AUG 12 2010

OFFICE OF PETITIONS

TI Law Group
2055 Junction Avenue, #205
San Jose CA 95131-2116

In re Application of :
Kondrk et al. :
Application No. 10/687,534 :
Filed: October 15, 2003 :
Attorney Docket No.: 101-P291/P3157US1 :
Title: METHOD AND SYSTEM FOR SUBMITTING MEDIA FOR NETWORK-BASED PURCHASE AND DISTRIBUTION :

DECISION ON RENEWED PETITION PURSUANT TO 37 C.F.R. § 1.137(a)

This is a decision on the renewed petition pursuant to 37 C.F.R. § 1.137(a), submitted on July 12, 2010, seeking the revival of the above-identified application.

The renewed petition pursuant to 37 C.F.R. § 1.137(a) is **DISMISSED.**

The above-identified application became abandoned for failure to reply in a timely manner to the non-final Office action, mailed August 4, 2009, which set a shortened statutory period for reply of three months. No response was received, and no extensions of time under the provisions of 37 C.F.R. § 1.136(a) were requested. Accordingly, the above-identified application became abandoned on November 5, 2009. A notice of abandonment was mailed on February 17, 2010.

The Relevant Portion of the MPEP

Section 711.03(c)(I)(A) sets forth, *in toto*:

> In *Delgar v. Schulyer*, 172 USPQ 513 (D.D.C. 1971), the court decided that the Office should mail a new Notice of Allowance in

view of the evidence presented in support of the contention that the applicant's representative did not receive the original Notice of Allowance. Under the reasoning of *Delgar*, an allegation that an Office action was never received may be considered in a petition to withdraw the holding of abandonment. If adequately supported, the Office may grant the petition to withdraw the holding of abandonment and remail the Office action. That is, the reasoning of Delgar is applicable regardless of whether an application is held abandoned for failure to timely pay the issue fee (35 U.S.C. 151) or for failure to prosecute (35 U.S.C. 133).

To minimize costs and burdens to practitioners and the Office, the Office has modified the showing required to establish nonreceipt of an Office action. The showing required to establish nonreceipt of an Office communication must include a statement from the practitioner describing the system used for recording an Office action received at the correspondence address of record with the USPTO. The statement should establish that the docketing system is sufficiently reliable. It is expected that the record would include, but not be limited to, the application number, attorney docket number, the mail date of the Office action and the due date for the response.

Practitioner must state that the Office action was not received at the correspondence address of record, and that a search of the practitioner's record(s), including any file jacket or the equivalent, and the application contents, indicates that the Office action was not received. A copy of the record(s) used by the practitioner where the non-received Office action would have been entered had it been received is required.

A copy of the practitioner's record(s) required to show non-receipt of the Office action should include the master docket for the firm. That is, if a three month period for reply was set in the nonreceived Office action, a copy of the master docket report showing all replies docketed for a date three months from the mail date of the nonreceived Office action must be submitted as documentary proof of nonreceipt of the Office action. If no such master docket exists, the practitioner should so state and provide other evidence such as, but not limited to, the following: the application file jacket; incoming mail log; calendar; reminder system; or the individual docket record for the application in question (emphasis added).

The showing outlined above may not be sufficient if there are circumstances that point to a conclusion that the Office action may have been lost after receipt rather than a conclusion that the Office action was lost in the mail (e.g., if the practitioner has a history of not receiving Office actions).

Evidence of nonreceipt of an Office communication or action (e.g., Notice of Abandonment or an advisory action) other than that action to which reply was required to avoid abandonment would not warrant withdrawal of the holding of abandonment. Abandonment takes place by operation of law for failure to reply to an Office action or timely pay the issue fee, not by operation of the mailing of a Notice of Abandonment. See *Lorenz v. Finkl*, 333 F.2d

885, 889-90, 142 USPQ 26, 29-30 (CCPA 1964); *Krahn v. Commissioner*, 15 USPQ2d 1823, 1824 (E.D. Va 1990); *In re Application of Fischer*, 6 USPQ2d 1573, 1574 (Comm'r Pat. 1988).

Analysis

A grantable petition pursuant to 37 C.F.R. § 1.137(a) must be accompanied by:

(1) The reply required to the outstanding Office action or notice, unless previously filed;
(2) The petition fee as set forth in 37 C.F.R. § 1.17(l);
(3) A showing to the Commissioner that the entire delay in filing the required reply from the due date for the reply until the filing of a grantable petition was unavoidable, and;
(4) Any terminal disclaimer (and fee as set forth in 37 C.F.R. § 1.20(d)) required pursuant to paragraph (d) of this section.

An original petition pursuant to 37 C.F.R. § 1.137(a) was filed on April 16, 2010, along with an amendment and a statement of facts. The petition fee was received on June 15, 2010, and the original petition was dismissed via the mailing of a decision on May 25, 2010, which indicated that requirements (1) and (2) of Rule 1.137(a) had been satisfied, and that the fourth requirement is not applicable, as a terminal disclaimer is not required.[1]

With the original petition, Petitioner alleged that the Office communication was not received and that both his "office and file" were searched, and the non-final Office action was not located.[2] With this renewed petition, Petitioner has indicated that incoming Office correspondence is entered into the docketing system (which generates monthly reminder print-outs that are "provided to the responsible attorney") and a "separate manual calendaring" is made.[3] Petitioner has also provided a docket report that is associated with this particular application.

This renewed petition cannot be granted however, as the record is silent as to the issue of the **master docket**. The decision on the original petition set forth, *in pertinent part*:

1 See Rule 1.137(d).
2 Statement submitted concurrently with the original petition.
3 Renewed petition, page 2.

> …Petitioner has not provided a copy of the master docket, or stated that no such master docket exists and submitted other forms of evidence referenced in the portion of the MPEP reproduced above.
>
> Decision on original petition, page 4.

To date, **Petitioner has not indicated whether or not a master docket exists**, and the only form of alternate evidence (of the type referred to in the portion of the MPEP referred to above) that has been provided is the docket report that is associated with this particular application.[4]

If reconsideration of this decision is desired, any response to this decision must be submitted within **TWO MONTHS** from the mail date of this decision. Extensions of time under 37 C.F.R. § 1.136(a) are permitted. The reply should include a cover letter entitled "Second Renewed Petition pursuant to 37 C.F.R. § 1.137(a)." This is not a final agency action within the meaning of 5 U.S.C § 704.

Moreover, **Petitioner should include a copy of the "manual calendaring" for the relevant date.**

The alternate petition under 37 C.F.R. § 1.137(b) will be held in abeyance so as to afford Petitioner the opportunity to file a second renewed petition under the unavoidable standard. If Petitioner would prefer to seek revival under the unintentional standard, a response to this decision should be submitted with words to this effect.

Any submission in response to this decision should indicate in a prominent manner that the attorney handling this matter is Paul Shanoski, and may be submitted by mail,[5] hand-delivery,[6] or facsimile.[7] Registered users of EFS-Web may alternatively submit a response to this decision via EFS-Web.[8]

If responding by mail, Petitioner is advised not to place the undersigned's name on the envelope. Only the information that

---

4 With this renewed petition, Petitioner has included a sample of a "case tracking system - reminder list," however it does not cover the relevant period of time, as it is dated June 25, 1010.
5 Mail Stop Petition, Commissioner for Patents, United States Patent and Trademark Office, P.O. Box 1450, Alexandria, VA, 22313-1450.
6 Customer Window, Randolph Building, 401 Dulaney Street, Alexandria, VA, 22314.
7 (571) 273-8300 - please note this is a central facsimile number.
8 https://sportal.uspto.gov/authenticate/authenticateuserlocalepf.html

appears in the footnote should be included - adding anything else to the address will delay the delivery of the response to the undersigned.

Telephone inquiries regarding *this decision* should be directed to Senior Attorney Paul Shanoski at (571) 272-3225.[9] All other inquiries concerning examination procedures should be directed to the Technology Center.

/Paul Shanoski/
Paul Shanoski
Senior Attorney
Office of Petitions

---

9 Petitioner will note that all practice before the Office should be in writing, and the action of the Office will be based exclusively on the written record in the Office. See 37 C.F.R. § 1.2. As such, Petitioner is reminded that no telephone discussion may be controlling or considered authority for any further action(s) of Petitioner.

UNITED STATES PATENT AND TRADEMARK OFFICE

COMMISSIONER FOR PATENTS
UNITED STATES PATENT AND TRADEMARK OFFICE
P.O. BOX 1450
ALEXANDRIA, VA 22313-1450
WWW.USPTO.GOV

Paper No.

MAILED

DEC 06 2010

OFFICE OF PETITIONS

TI Law Group
2055 Junction Avenue, #205
San Jose CA 95131-2116

In re Application of	:	
Kondrk et al.	:	
Application No. 10/687,534	:	DECISION ON PETITION
Filed: October 15, 2003	:	PURSUANT TO 37 C.F.R.
Attorney Docket No.: 101-P291/P3157US1	:	§ 1.137(b)
Title: METHOD AND SYSTEM FOR SUBMITTING MEDIA FOR NETWORK-BASED PURCHASE AND DISTRIBUTION	:	

This is a decision on the petition pursuant to 37 C.F.R. § 1.137(b), submitted on August 23, 2010, seeking the revival of the above-identified application.

This petition pursuant to 37 C.F.R. § 1.137(b) is **GRANTED.**

The above-identified application became abandoned for failure to reply in a timely manner to the non-final Office action, mailed August 4, 2009, which set a shortened statutory period for reply of three months. No response was received, and no extensions of time under the provisions of 37 C.F.R. § 1.136(a) were requested. Accordingly, the above-identified application became abandoned on November 5, 2009. A notice of abandonment was mailed on February 17, 2010.

An original petition pursuant to 37 C.F.R. § 1.137(a) was filed on April 16, 2010, along with, *inter alia*, an amendment and a statement of facts. The petition fee was received on June 15, 2010, and the original petition was dismissed via the mailing of a decision on May 25, 2010. A renewed petition pursuant to 37 C.F.R. § 1.137(a) was filed on July 12, 2010, and was dismissed via the mailing of a decision on August 12, 2010.

A grantable petition pursuant to 37 C.F.R. § 1.137(b) must be accompanied by:

(1) The reply required to the outstanding Office action or notice, unless previously filed;
(2) The petition fee as set forth in 37 C.F.R. § 1.17(m);
(3) A statement that the entire delay in filing the required reply from the due date for the reply until the filing of a grantable petition pursuant to this paragraph was unintentional. The Commissioner may require additional information where there is a question whether the delay was unintentional, and;
(4) Any terminal disclaimer (and fee as set forth in 37 C.F.R. § 1.20(d)) required pursuant to paragraph (d) of this section.

With this petition, Petitioner has submitted the proper statement of unintentional delay.

The petition fee will be charged to Deposit Account No. 50-4298 in due course, as authorized in this petition.

As such, the first three requirements of Rule 1.137(b) have been met. The fourth requirement of Rule 1.137(b) is not applicable, as a terminal disclaimer is not required.[1]

The Technology Center will be notified of this decision, and jurisdiction over this application is transferred to the Technology Center, so that the application may receive further processing. The Technology Center's support staff will notify the Examiner of this decision, so that the amendment that was received on April 16, 2010 can be processed in due course.

Petitioner may find it beneficial to view Private PAIR within a fortnight of the present decision to ensure that the revival has been acknowledged by the Technology Center in response to this decision. It is noted that all inquiries with regard to any failure of that change in status should be directed to the Technology Center where that change of status must be effected - **the Office of Petitions cannot effectuate a change of status.**

Telephone inquiries regarding *this decision* should be directed to the undersigned at (571) 272-3225.[2] All other inquiries

---

1 See Rule 1.137(d).
2 Petitioner will note that all practice before the Office should be in writing, and the action of the Office will be based exclusively on the written record in the Office. See 37 C.F.R. § 1.2. As such, Petitioner is

concerning this application should be directed to the Technology Center.

/Paul Shanoski/
Paul Shanoski
Senior Attorney
Office of Petitions

---

reminded that no telephone discussion may be controlling or considered authority for Petitioner's further action(s).

UNITED STATES PATENT AND TRADEMARK OFFICE

Commissioner for Patents
United States Patent and Trademark Office
P.O. Box 1450
Alexandria, VA 22313-1450
www.uspto.gov

BANNER & WITCOFF, LTD.
TEN SOUTH WACKER DRIVE
SUITE 3000
CHICAGO, IL 60606

MAILED
JUN 03 2011
OFFICE OF PETITIONS

In re Application of	:	
Mark G. Frei et al	:	
Application No. 10/687,570	:	DECISION ON PETITION
Filed: October 15, 2003	:	TO WITHDRAW
Attorney Docket No.: 011738.00138	:	FROM RECORD
	:	

This is a decision on the Request to Withdraw as attorney or agent of record under 37 C.F.R. § 1.36(b), filed April 28, 2011.

The request is **NOT APPROVED**.

A grantable request to withdraw as attorney/agent of record must be signed by every attorney/agent seeking to withdraw or contain a clear indication that one attorney is signing on behalf of another/others.

The request is filed by William J. Allen on behalf of the practitioners (with registrations numbers) of record provided.

The Office no longer accepts an address change to the new practitioner identified in the request, absent the filing of a power of attorney to the new representative. The Office will, however, change the correspondence address of record to the most current address provided for (1) the intervening assignee of the entire interest or (2) the first named inventor.

The request to withdraw from record cannot be approved at this time, since a current correspondence address was not provided.

All future communications from the Office will continue to be directed to the above-listed address until otherwise notified by applicant.

Telephone inquiries concerning this decision should be directed to undersigned at 571-272-3210. All other inquiries concerning the examination or status of this application should be directed to the Technology Center.

Irvin Dingle
Petitions Examiner
Office of Petitions

UNITED STATES PATENT AND TRADEMARK OFFICE

Commissioner for Patents
United States Patent and Trademark Office
P.O. Box 1450
Alexandria, VA 22313-1450
www.uspto.gov

BANNER & WITCOFF, LTD.
TEN SOUTH WACKER DRIVE
SUITE 3000
CHICAGO, IL 60606

MAILED

JUL 14 2011

OFFICE OF PETITIONS

In re Application of	:	
Mark G. Frei et al	:	
Application No. 10/687,570	:	DECISION ON PETITION
Filed: October 15, 2003	:	TO WITHDRAW
Attorney Docket No. 011738.00138	:	FROM RECORD
	:	

This is a decision on the Request to Withdraw as attorney or agent of record under 37 C.F.R. § 1.36(b), filed June 27, 2011.

The request is **APPROVED**.

The request was signed by William J. Allen on behalf of the practitioners (with registrations numbers) of record listed on the attached paper(s).

Applicant is reminded that there is no attorney of record at this time.

All future correspondence will be directed to assignee Medtronic, Inc. at the below address.

Telephone inquiries concerning this decision should be directed to Irvin Dingle at (571) 272-3210.

Irvin Dingle
Petitions Examiner
Office of Petitions

cc: Medtronic, Inc.
710 Medtronic Parkway NE
Minneapolis, MN 55432

UNITED STATES PATENT AND TRADEMARK OFFICE

UNITED STATES DEPARTMENT OF COMMERCE
United States Patent and Trademark Office
Address: COMMISSIONER FOR PATENTS
P.O. Box 1450
Alexandria, Virginia 22313-1450
www.uspto.gov

APPLICATION NUMBER	FILING OR 371(C) DATE	FIRST NAMED APPLICANT	ATTY. DOCKET NO./TITLE
10/687,570	10/15/2003	Mark G. Frei	011738.00138

CONFIRMATION NO. 7127

POWER OF ATTORNEY NOTICE

22908
BANNER & WITCOFF, LTD.
TEN SOUTH WACKER DRIVE
SUITE 3000
CHICAGO, IL 60606

OC000000048734242

Date Mailed: 07/14/2011

NOTICE REGARDING CHANGE OF POWER OF ATTORNEY

This is in response to the Power of Attorney filed 06/27/2011.

- The withdrawal as attorney in this application has been accepted. Future correspondence will be mailed to the new address of record. 37 CFR 1.33.

/idingle/

Office of Data Management, Application Assistance Unit (571) 272-4000, or (571) 272-4200, or 1-888-786-0101

UNITED STATES PATENT AND TRADEMARK OFFICE

UNITED STATES DEPARTMENT OF COMMERCE
United States Patent and Trademark Office
Address: COMMISSIONER FOR PATENTS
P.O. Box 1450
Alexandria, Virginia 22313-1450
www.uspto.gov

APPLICATION NUMBER	FILING OR 371(C) DATE	FIRST NAMED APPLICANT	ATTY. DOCKET NO./TITLE
10/687,570	10/15/2003	Mark G. Frei	011738.00138

CONFIRMATION NO. 7127

POA ACCEPTANCE LETTER

Medtronic, Inc.
710 Medtronic Parkway NE
Minneapolis, MN 55432

OC000000048734254

Date Mailed: 07/14/2011

NOTICE OF ACCEPTANCE OF POWER OF ATTORNEY

This is in response to the Power of Attorney filed 06/27/2011.

The Power of Attorney in this application is accepted. Correspondence in this application will be mailed to the above address as provided by 37 CFR 1.33.

/idingle/

Office of Data Management, Application Assistance Unit (571) 272-4000, or (571) 272-4200, or 1-888-786-0101

UNITED STATES PATENT AND TRADEMARK OFFICE

UNITED STATES DEPARTMENT OF COMMERCE
United States Patent and Trademark Office
Address: COMMISSIONER FOR PATENTS
P.O. Box 1450
Alexandria, Virginia 22313-1450
www.uspto.gov

APPLICATION NO.	FILING DATE	FIRST NAMED INVENTOR	ATTORNEY DOCKET NO.	CONFIRMATION NO.
10/687,748	10/20/2003	Abe Nishiki		9269

7590 08/13/2010

Clyde I. Coughenour
16607 Sutton Place
Woodbridge, VA 22191

EXAMINER
BLATT, ERIC D

ART UNIT	PAPER NUMBER
3734	

MAIL DATE	DELIVERY MODE
08/13/2010	PAPER

Please find below and/or attached an Office communication concerning this application or proceeding.

The time period for reply, if any, is set in the attached communication.

UNITED STATES PATENT AND TRADEMARK OFFICE

Commissioner for Patents
United States Patent and Trademark Office
P.O. Box 1450
Alexandria, VA 22313-1450
www.uspto.gov

Clyde I. Coughenour
16607 Sutton Place
Woodbridge VA 22191

In re Application of:
NISHIKI, ABE
Serial No.: 10/687,748
Filed: Oct. 23, 2003
Docket: n/a
Title: PLIERS-LIKE TOOL AND PROCESS FOR CURING PHIMOSIS

DECISION ON PETITION

This is a decision on the petition filed on August 4, 2010 seeking to allow the application or forward the application to the Board of Patent Appeals and Interferences for adjudication. This petition is being considered pursuant to 37 CFR § 1.181(a) (3). No fee is required for this petition.

The petition is **Granted in part.**

In the petition, the petitioner requests that the Director to direct the examiner to allow the application or consider the appeal brief filed on August 4, 2010 and forward the application to the Board of Patent Appeals and Interferences for final resolution.

The record shows that:

1) In response to the applicant's amendment of April 2, 2007, on July 6, 2007 the examiner mailed a non-final Office action.
2) On September 7, 2007, the applicant filed a Request for reconsideration. In response, the examiner issued a non-final Office action on December 27, 2007.
3) In response, on March 20, 2008, the applicant filed a Notice of appeal and an Appeal Brief appealing the claims under non-final rejection. A corrected appeal brief was filed on April 18, 2008.
4) In response to the Appeal Brief of April 18, 2008, on October 2, 2008, the examiner re-opened prosecution and issued a non-final Office action with new grounds of rejection.
5) In response, the applicant filed another appeal brief on December 2, 2008 appealing all rejected claims.

6) In response to the Appeal Brief of December 22, 2008, on June 8, 2010, the examiner re-opened prosecution and issued a non-final Office action with new grounds of rejection.
7) On August 4, 2010, the applicant filed third appeal brief appealing the rejected claims.
8) On August 4, 2010 the present petition was filed requesting the examiner to Allow the application or write an examiner's answer and forward the case to the Board of Patent Appeals and Interferences for its adjudication.

Discussion and Analysis

A review of the application reveals that there is a prolonged prosecution in this case. The application history also shows the examiner reopened prosecution two times. Office policy requires examiners to complete a thorough prior art search, and avoid piecemeal examination as much as possible. Office policy discourages piece meal prosecution as set forth in M.P.E.P §707.07(g)[1]. Regrettably due to late discovery and different interpretation of the prior art references, prosecution of the applicant's invention has been unavoidably prolonged. It should be noted that the Primary Examiner has a duty to consider the merits of the claims under M.P.E.P. § 1004. In order to avoid re-opening prosecution, the examiner is again reminded to perform a complete and thorough search of prior art considering not only the claims presented, but also any subject matter the examiner reasonably anticipates might be incorporated into a subsequent amendment in accordance with M.P.E.P. 904.03[2].

In response to the petition, the examiner is hereby instructed to timely set up an appeal conference in accordance with M.P.E.P. §1207.01. Additionally, the examiner is also directed to conclude the examination of the application within three months or sooner from the filing date of the latest appeal brief.

In the petition, petitioner also request the drawing objection under 37 CFR 1.83(a) be withdrawn. A review of the record indicates that the drawing objection and claim rejection are directed at the same issues. Under 37 CFR 1.83(a)[3], the drawing in a nonprovisional application must illustrate every claimed feature, with the exception of conventional features deemed not essential for a proper understanding of the invention. These features should be illustrated in a graphical drawing or labeled representation. In the non-final office action of June 8, 2010, the examiner stated "the drawings must show every feature of the invention specified in the claims. Therefore,

[1] M.P.E.P. § 707.07(g) states: Piecemeal examination should be avoided as much as possible. The examiner ordinarily should reject each claim on all valid grounds available, avoiding, however, undue multiplication of references

[2] M.P.E.P. § 904.03 states in relevant part: "'It is normally not enough that references be selected to meet only the terms of the claims alone, especially if only broad claims are presented; but the search should, insofar as possible, also cover all subject matter which the examiner reasonably anticipates might be incorporated into applicant's amendment."

[3] § 1.83 Content of drawing. (a) The drawing in a nonprovisional application must show every feature of the invention specified in the claims. However, conventional features disclosed in the description and claims, where their detailed illustration is not essential for a proper understanding of the invention, should be illustrated in the drawing in the form of a graphical drawing symbol or a labeled representation (e.g., a labeled rectangular box). In addition, tables and sequence listings that are included in the specification are, except for applications filed under 35 U.S.C. 371, not permitted to be included in the drawings.

the pawl being attached to the second handle grip by a second pivot pin must be shown or the feature(s) canceled from the claim(s)." In addition, the examiner also rejected at least claim 3 under 35 U.S.C. 112, first paragraph, as failing to comply with the enablement requirement. The examiner stated "The claim(s) contains subject matter which was not described in the specification in such a way as to enable one skilled in the art to which it pertains, or with which it is most nearly connected, to make and/or use the invention." The examiner further explained the rejection[4] of claim 3 in details on page 4 of the Office action mailed on June 8, 2010.

It is the policy of the USPTO in appropriate circumstances to decline to rule on a petitionable issue, when, as here, that an issue is also determinative of a rejection, and as such, is appropriate for consideration on appeal to the BPAI. In this case, the issue in the objection and rejection, as here, additionally and necessarily requires the exercise of technical skill and legal judgment in order to evaluate the facts presented, the issue is properly decided on the merits, and is properly reviewed on appeal, not petition. Under the circumstances, it is believed that the issues presented under the claim rejections and drawing objection in the instant case require the same review by the BPAI. Thus, the decision by the BPAI will be critical in determining whether or not the drawings should be accepted and entered. This petition to request withdrawal of drawing objection is dismissed and deferred to the BPAI as the issue as a whole is appealable and should not be decided by petition.

Conclusion

Under the circumstances, the relief requested to conclude the examination of the application is granted. For the reasons as stated above, the relief requested by the petitioner to withdraw the drawing objection will not be granted. Because there were objections to the drawings under 37 CFR 1.83(a) and a rejection of at least claim 3 under 35 USC 112, the overall issue is appealable and the drawing objection will not be decided by petition.

The application is being forwarded to the examiner via the Supervisory Patent Examiner of Art Unit 3734 for preparation of an Appeal Conference and examiner's answer. Any request for reconsideration of this decision must be submitted within TWO (2) MONTHS from the mail date of this decision, 37 CFR 1.181(f). No extension of time under 37 CFR 1.136(a) is permitted. The reconsideration request should include a cover letter entitled "Renewed Petition under 37 CFR

[4] Claim 3 recites that the curved rack is attached to the first handle grip by a first pivot pin and the pawl is attached to the second handle grip by a second pivot pin. This second pivot pin is not shown in the drawings, and is mentioned only once in the specification in Paragraph 29 of the associated pre-grant publication 2004/0098003. This passage reads, "Ratchet mechanism 6 is equipped with a pawl 7, pivotably held by a second pivot pin on one handle grip 2R, and a rack 8, attached to the other handle grip." One skilled in the art would not understand from this disclosure how to use the second pivot pin. The specification explains that the rack and pawl are selectively engaged and disengaged with one another by rotating the rack about the first pivot pin, but the specification fails to address any application wherein the pawl is rotated about its pivot pin. Furthermore, pivotally mounting the pawl would seemingly allow the pawl to freely pivot out of engagement with the rack, thereby preventing proper function of the ratchet as disclosed. No means for preventing the pawl from freely pivoting out of engagement with the rack is disclosed. One skilled in the art would not understand from this disclosure how to properly operate this a ratchet wherein both the rack and pawl are pivotally mounted and no means for preventing the pawl from pivoting out of engagement with the rack is disclosed.

1.181". Any inquiry regarding this decision should be directed to Henry C. Yuen, Special Programs Examiner, at (571) 272-3468.

Petition Granted in part.

Angela D. Sykes, Director
Technology Center 3700

UNITED STATES PATENT AND TRADEMARK OFFICE

Commissioner for Patents
United States Patent and Trademark Office
P.O. Box 1450
Alexandria, VA 22313-1450
www.uspto.gov

VISTA IP LAW GROUP LLP
1885 LUNDY AVENUE SUITE 108
SAN JOSE CA 95131

MAILED

MAR 28 2011

OFFICE OF PETITIONS

In re Application of	:	
Gaurav SINGH et al.	:	
Application No. 10/687,785	:	NOTICE UNDER 37 CFR. 1.28(c)
Patent No. 7,174,441	:	
Filed: October 17, 2003	:	
Attorney Docket No. RZMI1P039/RZMI-P0308-US		

This is a notice regarding your request for acceptance of a fee deficiency submission under 37 CFR 1.28.

The Office no longer investigates or rejects original or reissue patent under 37 CFR 1.56. **1098 Off. Gaz. Pat. Office 502 (January 3, 1989)**. Therefore, nothing in this Notice is intended to imply that an investigation was done.

Your fee deficiency submission under 37 CFR 1.28 is hereby **ACCEPTED**.

This patent is no longer entitled to small entity status. Accordingly, all future fees paid in this patent must be paid at the large entity rate.

Inquiries related to this communication should be directed to Michelle R. Eason at (571) 272-4231.

Thurman K. Page

Thurman K. Page
Petitions Examiner
Office of Petitions

UNITED STATES PATENT AND TRADEMARK OFFICE

UNITED STATES DEPARTMENT OF COMMERCE
United States Patent and Trademark Office
Address: COMMISSIONER FOR PATENTS
P.O. Box 1450
Alexandria, Virginia 22313-1450
www.uspto.gov

APPLICATION NO.	FILING DATE	FIRST NAMED INVENTOR	ATTORNEY DOCKET NO.	CONFIRMATION NO.
10/687,799	10/17/2003	Jessica Teeling	4086.1000-002	1801

21005 7590 02/22/2011
HAMILTON, BROOK, SMITH & REYNOLDS, P.C.
530 VIRGINIA ROAD
P.O. BOX 9133
CONCORD, MA 01742-9133

EXAMINER
SCHWADRON, RONALD B

ART UNIT	PAPER NUMBER
1644	

MAIL DATE	DELIVERY MODE
02/22/2011	PAPER

Please find below and/or attached an Office communication concerning this application or proceeding.

The time period for reply, if any, is set in the attached communication.

UNITED STATES PATENT AND TRADEMARK OFFICE

Commissioner for Patents
United States Patent and Trademark Office
P.O. Box 1450
Alexandria, VA 22313-1450
www.uspto.gov

FEB 2 2 2011

HAMILTON, BROOK, SMITH & REYNOLDS, P.C.
530 VIRGINIA ROAD
P.O. BOX 9133
CONCORD MA 01742-9133

Teeling, et al.	:
Serial No.: 10/687,799	:
Filed: October 17, 2003	: PETITION DECISION
Attorney Docket No.: **4086.1000-002**	:
	:

This is in response to the Petition filed by applicants under 37 CFR § 1.181 on February 11, 2011, requesting to vacate the Notice of Non-Compliant Amendment of January 11, 2011.

BACKGROUND

Most recently, the examiner mailed a Notice of Non-Compliant Amendment of January 11, 2011.

In response thereto, applicants filed a Petition under 37 CFR § 1.181 requesting that the Notice of Non-Compliant Amendment be vacated. In addition, applicants filed a reply to the Notice of Non-Compliant Amendment which corrected the status identifiers for the claims.

DECISION

The petition is **DISMISSED AS MOOT** in view of the reply to Notice of non-Compliant Amendment of February 11, 2011 which corrected the status identifiers for the claims.

Should there be any questions about this decision please contact Marianne C. Seidel, by letter addressed to Director, TC 1600, at the address listed above, or by telephone at 571-272-0584 or by facsimile sent to the general Office facsimile number, 571-273-8300.

/MC Seidel/
Marianne C. Seidel, Quality Assurance Specialist
Technology Center 1600

UNITED STATES PATENT AND TRADEMARK OFFICE

UNITED STATES DEPARTMENT OF COMMERCE
United States Patent and Trademark Office
Address: COMMISSIONER FOR PATENTS
P.O. Box 1450
Alexandria, Virginia 22313-1450
www.uspto.gov

APPLICATION NO.	FILING DATE	FIRST NAMED INVENTOR	ATTORNEY DOCKET NO.	CONFIRMATION NO.
10/687,799	10/17/2003	Jessica Teeling	4086.1000-002	1801

21005 7590 03/07/2011
HAMILTON, BROOK, SMITH & REYNOLDS, P.C.
530 VIRGINIA ROAD
P.O. BOX 9133
CONCORD, MA 01742-9133

EXAMINER
SCHWADRON, RONALD B

ART UNIT	PAPER NUMBER
1644	

MAIL DATE	DELIVERY MODE
03/07/2011	PAPER

Please find below and/or attached an Office communication concerning this application or proceeding.

The time period for reply, if any, is set in the attached communication.

UNITED STATES PATENT AND TRADEMARK OFFICE

Commissioner for Patents
United States Patent and Trademark Office
P.O. Box 1450
Alexandria, VA 22313-1450
www.uspto.gov

MAR 0 7 2011

HAMILTON, BROOK, SMITH & REYNOLDS, P.C.
530 VIRGINIA ROAD
P.O. BOX 9133
CONCORD MA 01742-9133

Teeling et al.	:
Serial No.: 10/687,799	:
Filed: October 17, 2003	: PETITION DECISION
Attorney Docket No.: **4086.1000-002**	:
	:

This is in response to the Petition filed by applicants under 37 CFR § 1.181 on February 11, 2011, requesting to vacate the Notice of Non-Compliant Amendment of January 11, 2011.

BACKGROUND

Most recently, the examiner mailed a Notice of Non-Compliant Amendment of January 11, 2011.

In response thereto, applicants filed a Petition under 37 CFR § 1.181 requesting that the Notice of Non-Compliant Amendment be vacated.

DECISION

The petition is **GRANTED** for the reasons set forth in the petition.

The Notice of Non-Compliant Amendment mailed January 11, 2011 is hereby vacated as it was improper. The petition decision of February 22, 2011 wherein the petition was DISMISSED AS MOOT is also vacated in favor of this decision to GRANT the petition of February 11, 2011. Accordingly, the claim set filed on November 3, 2010 is considered proper.

Should there be any questions about this decision please contact Marianne C. Seidel, by letter addressed to Director, TC 1600, at the address listed above, or by telephone at 571-272-0584 or by facsimile sent to the general Office facsimile number, 571-273-8300.

/MC Seidel/
Marianne C. Seidel, Quality Assurance Specialist
Technology Center 1600

UNITED STATES PATENT AND TRADEMARK OFFICE

Commissioner for Patents
United States Patent and Trademark Office
P.O. Box 1450
Alexandria, VA 22313-1450
www.uspto.gov

CROWELL & MORING LLP
INTELLECTUAL PROPERTY GROUP
P.O. BOX 14300
WASHINGTON DC 20044-4300

MAILED
APR 26 2011
PCT LEGAL ADMINISTRATION

In re Application of	:	
WANK	:	
Patent No.: 7871606	:	
Application No.: 10/687,913	:	
Filing Date: 20 October 2003	:	DECISION on PETITION
Attorney's Docket No.: 104341.B090019	:	
For: USE OF STIMULATED PERIPHERAL-	:	UNDER 37 CFR 1.78(a)(3)
BLOOD MONONUCLEAR CELLS FOR THE	:	
TREATMENT OF CANCEROUS DISEASES	:	

This is a decision on Petitioner's "Petition Under 37 CFR 1.78", filed 05 April 2011, to accept an unintentionally delayed claim under 35 U.S.C. §120 and 365(c) for the benefit of priority of PCT Application No. PCT/EP02/04524, filed on 24 April 2002. The petition will be treated under 37 CFR §1.78(a)(3).

The petition is **DISMISSED**.

A petition under 37 CFR §1.78(a)(3) is only applicable to those applications filed on or after November 29, 2000. Further, the petition is appropriate only after the expiration of the period specified in 37 CFR 1.78(a)(5)(ii). In addition, the petition under must be accompanied by:

(1) the reference required by 35 U.S.C. §§120 and 119(e) and 37 CFR §§1.78(a)(2) and 1.78(a)(5)(i) of the prior-filed application, unless previously submitted;

(2) the surcharge set forth in § 1.17(t); and

(3) a statement that the entire delay between the date the claim was due under 37 CFR 1.78(a)(5)(ii) and the date the claim was filed was unintentional. The Director may require additional information where there is a question whether the delay was unintentional.

As to item (1), the petition does not comply with the requirements for a grantable petition under 37 CFR 1.78(a)(3), in that, a proper reference to the prior-filed international application has not been included in an amendment to the first sentence of the specification following the title or in an executed supplemental Application Data Sheet, as provided by 37 CFR §1.78(a)(2)(iii).

Applicant is advised that a supplemental application data sheet (ADS) must bear a proper signature as required by 37 CFR 1.33(b). The supplemental ADS submitted with the present petition does not bear a proper signature as required by 37 CFR 1.33(b). Form PTO/SB/14 contains an appropriate signature block and can be obtained at http://www.uspto.govebc/ portal/efs/sb0014.fill.pdf. Applicant is further advised that a supplemental ADS must be titled in accordance with 37 CFR 1.76(c)(2).

With respect to Item (2), applicant's statement that "the entire delay was unintentional" is construed as "the entire delay between the date the claim was due under 37 CFR 1.78(a)(2)(ii) and the date the claim was filed was unintentional". If this is incorrect, applicant must notify the Office at once.

Accordingly, before the petition under 37 CFR 1.78(a)(3) can be granted, a renewed petition and either an executed Supplemental Application Data Sheet or a proper amendment (complying with 37 CFR 1.121 or 37 CFR 1.76(b)(5)) are required.

Any further correspondence with respect to this matter may be filed electronically via EFS-Web selecting the document description "Petition for review and processing by the PCT Legal Office" or by mail addressed to Mail Stop PCT, Commissioner for Patents, Office of PCT Legal Administration, P.O. Box 1450, Alexandria, Virginia 22313-1450, with the contents of the letter marked to the attention of the Office of PCT Legal Administration.

Any questions concerning this matter may be directed to Cynthia Kratz at (571) 272-3286.

/Boris Milef/

Boris Milef

PCT Legal Examiner

Office of PCT Legal Administration

SPE RESPONSE FOR CERTIFICATE OF CORRECTION

Paper No.: _____

DATE : 04/13/11

TO SPE OF : ART UNIT 1644

SUBJECT : Request for Certificate of Correction for Appl. No 10/687,913.: 7871606

Please respond to this request for a certificate of correction within 7 days.

FOR IFW FILES:

Please review the requested changes/corrections as shown in the **COCIN** document(s) in the IFW application image. No new matter should be introduced, nor should the scope or meaning of the claims be changed.

Please complete the response (see below) and forward the completed response to scanning using document code **COCX**.

FOR PAPER FILES:

Please review the requested changes/corrections as shown in the attached certificate of correction. Please complete this form (see below) and forward it with the file to:

Certificates of Correction Branch (CofC)

Should the change(s) Be made?

RoChaun Johnson
Certificates of Correction Branch
571 272-0470

Thank You For Your Assistance

The request for issuing the above-identified correction(s) is hereby:
Note your decision on the appropriate box.

- ☐ **Approved** — **All** changes apply.
- ☐ **Approved in Part** — Specify below which changes **do not** apply.
- ☒ **Denied** — State the reasons for denial below.

Comments: Please see Decision on Petition

SPE — 1644 Art Unit

UNITED STATES PATENT AND TRADEMARK OFFICE

Commissioner for Patents
United States Patent and Trademark Office
P.O. Box 1450
Alexandria, VA 22313-1450
www.uspto.gov

MAILED

OCT 03 2011

PCT LEGAL ADMINISTRATION

CROWELL & MORING LLP
INTELLECTUAL PROPERTY GROUP
P.O. BOX 14300
WASHINGTON DC 20044-4300

Patent No.: 7,871,606 Issue Date: 18 January 2011 Application No.: 10/687,913 Filing Date: 20 October 2003 Attorney's Docket No.: 104341.B090019 For: USE OF STIMULATED PERIPHERAL-BLOOD MONONUCLEAR CELLS FOR THE TREATMENT OF CANCEROUS DISEASES	:	DECISION GRANTING PETITION UNDER 37 CFR 1.78(a)(3) AND REQUEST FOR CERTIFICATE OF CORRECTION

This is a decision on the "Renewed Petition under 37 CFR 1.78(a)(3)", filed May 19, 2011, seeking to add a claim for priority on the front page of the Letters Patent by way of a Certificate of Correction to prior-filed international Application No. PCT/EP02/04524, filed 24 April 2002.

The petition is granted.

A review of the file record fails to disclose that a claim for the benefit of priority to the above-noted, prior-filed international application was made within the time period set forth in 37 CFR 1.78(a)(2)(ii) and further failed to include a proper reference to the prior-filed application as required by 37 CFR 1.78(a)(2)(i) and 1.78(a)(2)(iii).

The instant application was filed October 20, 2003. Therefore, since this application was filed after November 29, 2000, a petition under 37 CFR 1.78(a)(3), along with submission of a Certificate of Correction, is the appropriate avenue of relief to accept a late claim for the benefit of priority to a prior-filed international application after issuance of the application into a patent. *See* MPEP 1481, Rev. 7, July 2008, page 1400-92, second column.

As the instant petition for acceptance of an unintentionally delayed claim for the benefit of priority under 35 U.S.C. § 120 to the above-noted, prior-filed international application satisfies the conditions of 37 CFR 1.78(a)(3), the petition is granted.

A corrected Filing Receipt, which includes the priority claim to the above-noted, prior-filed international application, accompanies this decision on petition.

Any inquiries concerning this decision may be directed to Cynthia Kratz at (571) 272-3286.

This patented file is being forwarded to the Certificates of Correction Branch for processing the request for a Certificate of Correction.

/Boris Milef/

Boris Milef
PCT Legal Examiner
Office of PCT Legal Administration

ATTACHMENT: Corrected Filing Receipt

UNITED STATES PATENT AND TRADEMARK OFFICE

Commissioner for Patents
United States Patent and Trademark Office
P.O. Box 1450
Alexandria, VA 22313-1450
www.uspto.gov

PHARMACIA & UPJOHN
7000 PORTAGE ROAD
KZO-300-104
KALAMAZOO MI 49001

MAILED

OCT 22 2010

OFFICE OF PETITIONS

In re Application of	:	
Britten, et al.	:	
Application No. 10/687,986	:	ON REQUEST FOR
Filed: October 17, 2003	:	RECONSIDERATION OF
Attorney Docket Number: PC27098	:	PATENT TERM ADJUSTMENT

This is a decision on the petition under 37 CFR 1.705(b), filed July 12, 2010. Applicants believe that they should be accorded an additional PTA of 596 days. Applicants request this correction in part on the basis that the Office will take in excess of three years to issue this patent.

Insofar as the instant application for patent term adjustment requests reconsideration of the patent term adjustment solely as it relates to the Office's failure to issue the patent within 3 years of the filing date, the application for patent term adjustment under 37 CFR 1.705(b) is **DISMISSED as PREMATURE**.

Knowledge of the actual date the patent issues is required to calculate the amount, if any, of additional patent term patentee is entitled to for Office failure to issue the patent within 3 years. See § 1.702(b). (This is true even where a request for continued examination (RCE) was filed). The computer will not undertake the § 1.702(b) calculation until the actual date of issuance of the patent has been determined. Likewise, the computer will not calculate any further Office delay under § 1.702(a)(4) or applicant delay under § 1.704(c)(10) until the actual date of issuance of the patent has been determined. As such, the Office can not make a determination on the correctness of the patent term adjustment until the patent has issued.

Requesting reconsideration of the patent term adjustment to be indicated on the patent under 37 CFR 1.705(b) based on the initial determination of patent term adjustment and a projected issuance date of the patent (or even the filing date of the request for continued examination) is premature. Accordingly, it is appropriate to dismiss as premature such a request.

Rather than file a request for reconsideration of patent term adjustment under 37 CFR 1.705(b) contesting the 37 CFR 1.702(b) calculation at the time of the mailing of the notice of allowance, applicants are advised that they may wait until the time of the issuance of the patent and file a

request for reconsideration of the patent term adjustment pursuant to 37 CFR 1.705(d). As the USPTO does not calculate the amount of time earned pursuant to 37 CFR 1.702(b) until the time of the issuance of the patent, the Office will consider any request for reconsideration of the patent term adjustment due to an error in the calculation of 37 CFR 1.702(b) to be timely if the request for reconsideration is filed within two months of the issuance of the patent. However, as to all other bases for contesting the initial determination of patent term adjustment received with the notice of allowance, applicant must timely file an application for patent term adjustment prior to the payment of the issue fee[1].

Applicants point out that they should have been assessed additional delay for the abandonment of the application pursuant to 37 CFR 1.704(c)(3). The Office mailed a Restriction Requirement, setting a 30 day period for reply, on February 7, 2006. No reply having been timely received, the application became abandoned on March 10, 2006. Applicants filed a grantable petition to revive on August 17, 2006. Therefore, pursuant to 37 CFR 1.704(c)(3), 283 days of applicant delay should have been assessed (March 10, 2006 – December 17, 2006).

In addition, a review of the file reveals that Applicants should have been assessed additional delay pursuant to 37 CFR 1.704(b). As the Restriction Requirement was mailed on February 7, 2006, and Applicants did not file a reply until August 17, 2006, 102 days of delay should have been assessed under 37 CFR 1.704(b).

In view thereof, the correct determination of PTA prior to issuance is **two hundred twenty-six (226) days** (714 (417+297) days of PTO delay, reduced by 488 (102+283+33)days of Applicant delay).

The application is being forwarded to the Office of Data Management for issuance of the patent.

Telephone inquiries specific to this decision should be directed to Petitions Attorney Cliff Congo at (571) 272-3207.

Anthony Knight
Director
Office of Petitions

Enc: copy of PAIR screen

---

[1] For example, if applicant disputes both the calculation of patent term adjustment under 37 CFR 1.702(a)(1) for Office failure to mail a first Office action or notice of allowance not later than fourteen months after the date on which the application was filed and under 37 CFR 1.702(b) for Office failure to issue a patent within three years of the actual filing date of the application, then applicant must still timely file an application for patent term adjustment prior to the payment of the issue fee to contest the calculation of Office delay in issuing a first Office action or notice of allowance. See 37 CFR 1.705(b) and 35 U.S.C. 154(b)(3)(B). A dispute as to the calculation of the §1.702(a)(1) period raised on request for reconsideration of patent term adjustment under 37 CFR 1.705(d) will be dismissed as untimely filed.

Patent Term Adjustments

PTA/PTE Information | Patent Term Adjustment | Patent Term Extension

Application Number*: 10687986 Search | Explanation of PTA Calculation | Explanation of PTE Calculation

PTA Calculations for Application: 10687986

Application Filing Date	10/17/2003	OverLapping Days Between (A and B) or (A and C)	0
Issue Date of Patent		Non-Overlapping USPTO Delays:	834
A Delays	834	PTO Manual Adjustment	-505
B Delays	0	Applicant Delay (APPL)	103
C Delays	0	Total PTA (days)	226

* - Sorted Column

File Contents History

Action Number	Action Recorded Date	Action Due Date	Action Code	Action Description	Duration PTO	Duration APPL	Parent Action Number
97	10/20/2010		P028	Adjustment of PTA Calculation by PTO		18	0
96	10/20/2010		P028	Adjustment of PTA Calculation by PTO		467	0
85	04/14/2010		MN/=.	Mail Notice of Allowance			0
84	04/09/2010		IREV	Issue Revision Completed			0
83	04/09/2010		N/=.	Notice of Allowance Data Verification Completed			0
82	04/09/2010		DOCK	Case Docketed to Examiner in GAU			0
80	03/02/2010		ACRE	Allowed Case Returned to the Examiner for Clerical Processing			0
79	03/01/2010		EX.A	Examiner's Amendment Communication			0
78	03/01/2010		CNTA	Notice of Allowability			0
77	02/23/2010		EXIN	Examiner Interview Summary Record (PTOL - 413)			0
76	01/23/2010		FWDX	Date Forwarded to Examiner			0
75	01/19/2010	12/17/2009	A...	Response after Non-Final Action		33	71
74	01/19/2010		XT/G	Request for Extension of Time - Granted			0
73	09/17/2009		ELC_RVW	Electronic Review			0
72	09/17/2009		EML_NTF	Email Notification			0
71	09/17/2009		MCTNF	Mail Non-Final Rejection			0
70	09/14/2009		CTNF	Non-Final Rejection			0
68	07/23/2009		FWDX	Date Forwarded to Examiner			0
66	07/23/2009		FWDX	Date Forwarded to Examiner			0
64	07/23/2009		ABN9	Disposal for a RCE / CPA / R129			0
67	07/13/2009		AMSB	Amendment Submitted/Entered with Filing of CPA/RCE			0
65	07/13/2009		RCEX	Request for Continued Examination (RCE)			0
63	07/13/2009		BRCE	Workflow - Request for RCE - Begin			0
62	05/29/2009		EML_NTR	Email Notification			0
61	05/29/2009		MCTAV	Mail Advisory Action (PTOL - 303)			0
60	05/26/2009		CTAV	Advisory Action (PTOL-303)			0
59	05/21/2009		FWDX	Date Forwarded to Examiner			0
58	05/19/2009		A.NE	Amendment after Final Rejection			0
57	04/13/2009		MCTFR	Mail Final Rejection (PTOL - 326)			0
56	04/10/2009		CTFR	Final Rejection			0
55	02/04/2009		FWDX	Date Forwarded to Examiner			0
54	01/21/2009		A...	Response after Non-Final Action			0
53	10/28/2008		MCTNF	Mail Non-Final Rejection			0
52	10/27/2008		CTNF	Non-Final Rejection			0
50	08/22/2008		FWDX	Date Forwarded to Examiner			0
47	07/29/2008		C.AD	Correspondence Address Change			0
51	07/10/2008		IDSC	Information Disclosure Statement considered			0
49	07/10/2008		A...	Response after Non-Final Action			0
48	07/10/2008		EIDS.	Electronic Information Disclosure Statement			0
46	07/10/2008		WIDS	Information Disclosure Statement (IDS) Filed			0
45	04/21/2008		MCTNF	Mail Non-Final Rejection			0
44	04/18/2008		CTNF	Non-Final Rejection			0
36	03/04/2008		FWDX	Date Forwarded to Examiner			0
35	02/28/2008		ELC.	Response to Election / Restriction Filed			0
34	02/07/2008	12/17/2006	MCTRS	Mail Restriction Requirement	417		29
33	02/04/2008		CTRS	Requirement for Restriction / Election			0
28	12/10/2007		MNRAB	Mail Notice of Rescinded Abandonment			0
30	12/08/2007		FWDX	Date Forwarded to Examiner			0
27	12/08/2007		NRAB	Notice of Rescinded Abandonment in TC#			0
26	08/17/2007		MPTD1	Mail-Petition Decision - Dismissed			0
24	08/21/2006		MABN2	Mail Abandonment for Failure to Respond to Office Action			0
23	08/18/2006		ABN2	Aband. for Failure to Respond to O. A.			0
29	08/17/2006		ELC.	Response to Election / Restriction Filed			0
25	08/17/2006		PET.	Petition Entered			0
22	02/07/2006	12/17/2004	MCTRS	Mail Restriction Requirement	417		-1
21	02/06/2006		CTRS	Requirement for Restriction / Election			0
20	12/29/2005		DOCK	Case Docketed to Examiner in GAU			0
39	09/17/2004		IDSC	Information Disclosure Statement considered			0
19	09/17/2004		RCAP	Reference capture on IDS			0
18.7	09/17/2004		M844	Information Disclosure Statement (IDS) Filed			0
18	09/17/2004		WIDS	Information Disclosure Statement (IDS) Filed			0
38	09/15/2004		IDSC	Information Disclosure Statement considered			0
17	09/15/2004		RCAP	Reference capture on IDS			0
16.7	09/15/2004		M844	Information Disclosure Statement (IDS) Filed			0
16	09/15/2004		WIDS	Information Disclosure Statement (IDS) Filed			0
15	08/16/2004		TSSCOMP	IFW TSS Processing by Tech Center Complete			0
14	08/16/2004		DOCK	Case Docketed to Examiner in GAU			0
13	07/20/2004		WROIPE	Application Return from OIPE			0
12	07/20/2004		RDIPE	Application Return TO OIPE			0
11	07/20/2004		OIPE	Application Dispatched from OIPE			0
10	07/20/2004		COMP	Application Is Now Complete			0
9	06/30/2004	04/21/2004	ADDFLFEE	Additional Application Filing Fees		70	5
8	06/30/2004		OATHDECL	A statement by one or more inventors satisfying the requirement under 35 USC 115, Oath of the Applic			0
7	05/11/2004		ADDFLFEE	Additional Application Filing Fees			0
5	01/21/2004		INCD	Notice Mailed--Application Incomplete--Filing Date Assigned			0
4	01/13/2004		L194	Cleared by OIPE CSR			0
3	01/13/2004		CLSS	CASE CLASSIFIED BY OIPE			0
2	11/21/2003		SCAN	IFW Scan & PACR Auto Security Review			0
1	10/17/2003		IEXX	Initial Exam Team nn			0

Export to: Excel

UNITED STATES PATENT AND TRADEMARK OFFICE

Commissioner for Patents
United States Patent and Trademark Office
P.O. Box 1450
Alexandria, VA 22313-1450
www.uspto.gov

MISSION/BSTZ
BLAKELY SOKOLOFF TAYLOR & ZAFMAN LLP
1279 OAKMEAD PARKWAY
SUNNYVALE, CA 94085-4040

MAILED

MAR 24 2011

OFFICE OF PETITIONS

In re Application of	:	
Christopher J. Cormack	:	
Application No. 10/687,987	:	DECISION ON PETITION
Filed: October 17, 2003	:	
Attorney Docket No.: 42P17666	:	

This is a decision in response to the petition, filed February 1, 2011, to revive the above-identified application under the provisions of 37 CFR 1.137(a). This is also a decision on the simultaneously filed petition to withdraw the holding of abandonment, which is treated under the provisions of 37 CFR 1.181 (no fee).

The petition under 37 CFR 1.137(a) is **DISMISSED**.

The petition under 37 CFR 1.181 is **GRANTED**.

This application was held abandoned for failure to reply to a non-final Office action mailed July 9, 2008, which set a three (3) month shortened statutory period for reply. A Notice of Abandonment was subsequently mailed on March 18, 2009.

Petitioner argues that the abandonment should be withdrawn. Petitioner explains that, while the Office action dated July 8, 2008 was addressed to the address of record, the Office action was not received.

A review of the written record does indicate an irregularity in the mailing of the Notice of July 9, 2008. In this regard, the non-final Office action in question was returned to the U.S. Patent and Trademark Office by the U.S. Postal Service for some unknown reason on July 10, 2008. Therefore the record supports a conclusion that the non-final Office action was not received by petitioner.

In view of the above, the Notice of Abandonment is hereby vacated and the holding of abandonment withdrawn.

Since the petition under 37 CFR 1.137(a) is unnecessary, the $540 petition fee submitted with the petition is being refunded to counsel's deposit account.

This application is being referred to the Technology Center AU 2423 for appropriate action in the normal course of business on the reply received February 1, 2011.

Telephone inquiries concerning this decision should be directed to the undersigned at (571) 272-3204. Inquiries relating to further prosecution should be directed to the Technology Center.

/SDB/

Sherry D. Brinkley
Petitions Examiner
Office of Petitions

UNITED STATES PATENT AND TRADEMARK OFFICE

Commissioner for Patents
United States Patent and Trademark Office
P.O. Box 1450
Alexandria, VA 22313-1450
www.uspto.

MAILED

JUN 27 2011

OFFICE OF PETITIONS

KILPATRICK TOWNSEND & STOCKTON LLP
TWO EMBARCADERO CENTER
EIGHTH FLOOR
SAN FRANCISCO, CA 94111-3834

In re Patent No. 7,380,267	:	
Issue Date: May 27, 2008	:	
Application No. 10/688,026	:	DECISION ON PETITION
Filed: October 17, 2003	:	
Attorney Docket No. 16869P-097900US	:	

This is a decision on the petition, filed, June 1, 2011, which is being treated as a request under 37 CFR 3.81(b)[1] to correct the assignee's name on the Fee(s) Transmittal form PTOL-85(b) by way of a certificate of correction in the patent.

The request is **GRANTED**.

Petitioner states that the correct assignee's name is Hitachi-Omron Terminal Solutions Corp. Further, petitioner states that the assignee's name was incorrectly indicated on the Fee(s) Transmittal form PTOL-85(b) at the time of payment of the issue fee. Accordingly, petitioner requests that a certificate of correction be issued to reflect the correct assignee on the front page of the Letters Patent.

37 CFR 3.81(b), effective June 25, 2004, reads:

> *After payment of the issue fee:* Any request for issuance of an application in the name of the assignee submitted after the date of payment of the issue fee, and any request for a patent to be corrected to state the name of the assignee, must state that the assignment was submitted for recordation as set forth in § 3.11 before issuance of the patent, and must include a request for a certificate of correction under § 1.323 of this chapter (accompanied by the fee set forth in § 1.20(a) and the processing fee set forth in § 1.17(i) of this chapter.

The certificate of correction (and fee) as required by 3.81(b) was submitted on June 1, 2011. Office assignment records reflect that Hitachi-Omron Terminal Solutions Corp. was the assignee of record before issuance of the patent. Accordingly, as the request complies with the provisions of 37 CFR 3.81(b), it is appropriate for a certificate of correction to be processed.

---

[1] See MPEP 1309, subsection II; and Official Gazette of June 22, 2004.

Inquiries concerning this decision should be directed to Alicia Kelley-Collier at (571) 272-6059. Any questions concerning the issuance of a certificate of correction should be directed to the Certificates of Correction Branch at (571) 272-4200.

This matter is being referred to the Certificates of Correction Branch for processing of a certificate of correction.

/Carl Friedman/
Carl Friedman
Petitions Examiner
Office of Petitions

UNITED STATES PATENT AND TRADEMARK OFFICE

Commissioner for Patents
United States Patent and Trademark Office
P.O. Box 1450
Alexandria, VA 22313-1450
www.uspto.gov

Paper No.

Kilpatrick Townsend &
Stockton LLP
Adobe Systems, Inc. 58083
1100 Peachtree Street
Suite 2800
Atlanta GA 30309-4530

MAILED
OCT 25 2011
OFFICE OF PETITIONS

In re Patent No. 8,005,925	:	
McBrian et al.	:	ON REQUEST FOR
Issue Date: August 23, 2011	:	RECONSIDERATION OF
Application No. 10/688,062	:	PATENT TERM ADJUSTMENT
Filed: October 17, 2003	:	
Atty Docket No. 58083-374957	:	
(M060)	:	

This is in response to the "REQUEST FOR RECONSIDERATION OF PATENT TERM INDICATED ON PATENT AND NOTIFICATION OF POSSIBLE ERROR IN CALCULATION" filed October 3, 2011.

The request is **DISMISSED**.

Patentee is given **TWO (2) MONTHS** to respond to this decision. No extensions of time will be granted under § 1.136(a).

Patentee requests that the patent term adjustment in the above-identified patent be corrected from 2615 days to 2371 days. Patentee states that USPTO did not account for the overlap period beginning on October 17, 2006, the date that is three years after the date on which the application was filed, and June 19, 2007, the date of mailing an action under 35 U.S.C. 132.

The patent term adjustment has been reviewed, and it has been determined that there was no error in calculation of the "B delay." The 940 days for successful appellate review was properly excluded from the over three year period of 1771 days, resulting in a "B delay" of 831 days. Having excluded the 940

days, it was properly determined that there was no overlap of "A" and "B delay."

In view thereof, the patent properly issued with a revised patent term adjustment of 2615 days.

The $200.00 fee set forth in 37 CFR 1.18(e) has been charged to Deposit Account No. 11-0855, as authorized. No additional fees are required.

Nothing in this decision shall be construed as a waiver of the requirement of 35 U.S.C. 154(b)(4) that any civil action by an applicant dissatisfied with a determination made by the Director under 35 U.S.C. 154(b)(3) be filed in the United States District Court for the District of Columbia within 180 days after the grant of the patent.

Telephone inquiries specific to this matter should be directed to the undersigned at (571) 272-3219.

Nancy Johnson
Senior Petitions Attorney
Office of Petitions

UNITED STATES PATENT AND TRADEMARK OFFICE

UNITED STATES DEPARTMENT OF COMMERCE
United States Patent and Trademark Office
Address: COMMISSIONER FOR PATENTS
P.O. Box 1450
Alexandria, Virginia 22313-1450
www.uspto.gov

APPLICATION NO.	FILING DATE	FIRST NAMED INVENTOR	ATTORNEY DOCKET NO.	CONFIRMATION NO.
10/688,361	10/17/2003	Gary W. Tripp	6057-68230	2303

35690 7590 09/24/2010
MEYERTONS, HOOD, KIVLIN, KOWERT & GOETZEL, P.C.
P.O. BOX 398
AUSTIN, TX 78767-0398

EXAMINER
VU, VIET DUY

ART UNIT	PAPER NUMBER
2154	

NOTIFICATION DATE	DELIVERY MODE
09/24/2010	ELECTRONIC

Please find below and/or attached an Office communication concerning this application or proceeding.

The time period for reply, if any, is set in the attached communication.

Notice of the Office communication was sent electronically on above-indicated "Notification Date" to the following e-mail address(es):

patent_docketing@intprop.com
ptomhkkg@gmail.com

SPE RESPONSE FOR CERTIFICATE OF CORRECTION

Paper No.:20100506

DATE : September 21, 2010

TO SPE OF : ART UNIT 2454

SUBJECT : Request for Certificate of Correction on Patent No.: 7032000

A response is requested with respect to the accompanying request for a certificate of correction.

Please complete this form and return with file, within **7** days to:
Certificates of Correction Branch - PK 3-910
Palm location **7590** - Tel. No. 305-8201

With respect to the change(s) requested, correcting Office and/or Applicant's errors, should the patent read as shown in the certificate of correction? No new matter should be introduced, nor should the scope or meaning of the claims be changed.

Thank You For Your Assistance **Certificates of Correction Branch**

The request for issuing the above-identified correction(s) is hereby:
Note your decision on the appropriate box.

☒ **Approved** **All** changes apply.

☐ **Approved in Part** Specify below which changes **do not** apply.

☐ **Denied** State the reasons for denial below.

Comments:

SPE: /Nathan F;ynn/ SPE 2454Nathan Flynn
Art Unit 2454

UNITED STATES PATENT AND TRADEMARK OFFICE

COMMISSIONER FOR PATENTS
UNITED STATES PATENT AND TRADEMARK OFFICE
P.O. BOX 1450
ALEXANDRIA, VA 22313-1450
www.uspto.gov

MCDONNELL BOEHNEN HULBERT &
BERGHOFF LLP
300 S. WACKER DRIVE
32ND FLOOR
CHICAGO IL 60606

MAILED
OCT 12 2010
OFFICE OF PETITIONS

In re Application :
Ibe, et al. :
Application No. 10/688,608 : PATENT TERM ADJUSTMENT
Filing or 371(c) Date: October 17, 2003 :
Dkt. No.: 08-1243-US :

This is in response to the "REQUEST FOR RECONSIDERATION OF PATENT TERM ADJUSTMENT," filed September 2, 2010. This matter is being properly treated pursuant to 37 CFR 1.705(b).

The request for reconsideration of patent term adjustment is **GRANTED**.

Applicant submits that the correct patent term adjustment to be indicated on the patent is 59 days, not 75 days as calculated by the Office as of the mailing of the initial determination of patent term adjustment mailed June 8, 2010. Applicants assert that the adjustment is subject to reduction in connection with the submission on January 2, 2008.

A review of the record reveals that, as argued, the patent term adjustment is subject to further reduction in connection with the submission filed January 2, 2008. The reduction totalling 16 days commenced December 18, 2007 and ended January 2, 2008. See, 37 CFR 1.704(c)(8).

In view thereof, as of the time of allowance, the application is entitled to a patent term adjustment of 59 days, as argued

The $200.00 patent term adjustment application required per 37 CFR 1.18(e) has been charged to the authorized deposit account.

The application file is being forwarded to the Office of Data Management for issuance of the patent. The patent term adjustment indicated on the patent (as shown on the Issue Notification mailed about three weeks prior to patent issuance) will include any additional adjustment accrued both for Office delay in issuing the patent more than four months after payment of the issue fee and satisfaction of all outstanding requirements, and for the Office taking in excess of three years to issue the patent (to the extent that the three-year period does not overlap with periods already accorded).

Telephone inquiries specific to this decision should be directed to the undersigned at (571) 272-3205.

/ALESIA M. BROWN/

Alesia M. Brown
Petitions Attorney
Office of Petitions

Enclosure: Adjusted PAIR Calculation

UNITED STATES PATENT AND TRADEMARK OFFICE

COMMISSIONER FOR PATENTS
UNITED STATES PATENT AND TRADEMARK OFFICE
P.O. BOX 1450

Woods, Fuller, Schultz & Smith P.C.
ATTN: Mr. Jeffrey A. Proehl
P.O. Box 5027
Sioux Falls, South Dakota 57117-5027

MAILED
FEB 18 2011
OFFICE OF PETITIONS

In re Patent No. 6,951,185	:	
Issue Date: 4 October 2005	:	
Application No. 10/688,620	:	ON PETITION
Filed: 17 October 2003	:	
Attorney Docket No. 22-0395	:	

This is a decision on the petition under 37 CFR 1.378(c), filed 10 May 2010, to accept the unintentionally delayed payment of a maintenance fee for the above-identified patent.

The petition is **GRANTED**.

This patent expired on 5 October 2009 for failure to pay the 3 and one-half year maintenance fee. Since this petition was submitted within twenty-four months after the six-month grace period provided in 37 CFR 1.362(e), the petition was timely filed under the provisions of 37 CFR 1.378(c).

The maintenance fee is hereby accepted and the above-identified patent is re-instated as of the mail date of this decision.

General inquiries relating to this decision should be directed to Robert DeWitty, Petitions Examiner, Office of Petitions (571-272-6051).

David Bucci
Petitions Examiner
Office of Petitions

UNITED STATES PATENT AND TRADEMARK OFFICE

Commissioner for Patents
United States Patent and Trademark Office
P.O. Box 1450
Alexandria, VA 22313-1450
www.uspto.gov

CESARI AND MCKENNA, LLP
88 BLACK FALCON AVENUE
BOSTON MA 02210

MAILED

AUG 01 2011

OFFICE OF PETITIONS

NOTICE

In re Patent No. 7,314,493 :
Issue Date: January 1, 2008 :
Application No. 10/688,711 :
Filed: October 17, 2003 :
Attorney Docket No. 107059-0037 :

This is a notice regarding your request for acceptance of a fee deficiency submission under 37 CFR 1.28 filed July 11, 2011. On September 1, 1998, the Court of Appeals for the Federal Circuit held that 37 CFR 1.28(c) is the sole provision governing the time for correction of the erroneous payment of the issue fee as a small entity. **See DH Technology v. Synergystex International, Inc. 154 F.3d 1333, 47 USPQ2d 1865 (Fed. Cir. Sept. 1, 1998).**

The Office no longer investigates or rejects original or reissue applications under 37 CFR 1.56. **1098 Off. Gaz. Pat. Office 502 (January 3, 1989)**. Therefore, nothing in this Notice is intended to imply that an investigation was done.

Your fee deficiency submission under 37 CFR 1.28 is hereby accepted. The petition is **GRANTED**.

This application is no longer entitled to small entity status. Accordingly, all future fees paid in this application must be paid at the large entity rate.

This file is being forwarded to Files Repository.

Telephone inquiries related to this decision should be directed to the Kimberly Inabinet at (571) 272-4618.

/Kimberly Inabinet/
Kimberly Inabinet
Petitions Examiner
Office of Petitions

UNITED STATES PATENT AND TRADEMARK OFFICE

Commissioner for Patents
United States Patent and Trademark Office
P.O. Box 1450
Alexandria, VA 22313-1450
www.uspto.gov

Date: 011/23/11

Patent No. : 7154485 B2
Ser. No. : 10/689,023
Inventor(s) : **Liao , et al.**
Issued : **December 26, 2006**
Title : **TOUCH PANEL MODULE**
Docket No. : **PT-00019**

Re: Request for Certificate of Correction

Consideration has been given your request for the issuance of a certificate of correction for the above-identified patent under the provisions of Rule(s) 1.322 and/or 1.323.

Assignees' names and addresses (assignment data) printed in a patent, are based *solely* on information supplied in the appropriate space for identifying the assignment data, i.e., item 3 of the Issue Fee Transmittal Form PTOL-85B. Granting of a request under 37 CFR 3.81(b) is required to correct applicant's error providing ***incorrect or erroneous*** assignment data, *before* issuance of a Certificate of Correction, under 37 CFR 1.323 *(see Manual of Patent Examining Procedures (M.P.E.P) Chp.1400, sect. 1481).* This procedure is required *at any time after the issue fee is paid*, including after issuance of the patent.

In view of the foregoing, your request, in this mater, is hereby denied.

A request to correct the Assignee under 37 CFR 3.81(b) should include:

A. **the processing fee set forth in 37 CFR 1.17(i) (currently $130);**
B. a statement that the failure to include the correct assignee name on the PTOL-85B was inadvertent; and
C. a copy of the Notice of Recordation of Assignment Document, reflecting the reel and frame number where the assignment(s) is recorded and/or reflecting proof of *the date* the assignment was submitted for recordation.

In the Request, Applicant(s) may request that the file be forwarded to Certificates of Correction Branch, for issuance of a Certificate of Correction, if the Request is granted.

Any request under 37 CFR 3.81(b) should be directed to the following address or facsimile number:

By mail: Mail Stop PETITIONS

Commissioner for Patents
Post Office Box 1450
Alexandria, VA 22313-1450

By hand: Customer Service Window
Mail Stop Petitions
Randolph Building
401 Dulany Street
Alexandria, VA 22314

By fax: (571) 273-0025
ATTN: Office of Petitions

If a fee (currently $100) was previously submitted for consideration of a Request for Certificate of Correction, under CFR 1.323, to correct assignment data, no additional fee is required.

Lamonte M. Newsome

Lamonte M. Newsome
For Mary Diggs, Supervisor
Decisions & Certificates
Of Correction Branch
(571) 272-3421 or (703) 305-8309

Flash Intellectual Property, Inc.
Attn. Cheng-Ju Chiang
P.O. Box 766
Chino CA 91708

LMN

UNITED STATES PATENT AND TRADEMARK OFFICE

Commissioner for Patents
United States Patent and Trademark Office
P.O. Box 1450
Alexandria, VA 22313-1450
www.uspto.gov

FLASH INTELLECTUAL PROPERTY, INC.
ATTN. CHENG-JU CHIANG
P.O. BOX 766
CHINO CA 91708

MAILED
MAR 09 2012
OFFICE OF PETITIONS

In re Patent No. 7,154,485	:	
Issue Date: December 26, 2006	:	
Application No. 10/689,023	:	ON PETITION
Filed: October 21, 2003	:	
Attorney Docket No. PT-00019	:	

This is a decision on the petition filed December 17, 2011, under 37 CFR 3.81(b) to correct the name of the assignee on the front page of the above-identified patent by way of a certificate of correction.

The petition is **DISMISSED**.

Petitioner requests issuance of a certificate of correction in the name of "eTurboTouch Technology Inc., Jhongli City, Taoyuan County, (TW)."

37 CFR 3.81(b), effective June 25, 2004, reads:

> *After payment of the issue fee:* Any request for issuance of an application in the name of the assignee submitted after the date of payment of the issue fee, and any request for a patent to be corrected to state the name of the assignee, must state that the assignment was submitted for recordation as set forth in § 3.11 **before issuance of the patent**, and must include a request for a certificate of correction under § 1.323 of this chapter (accompanied by the fee set forth in § 1.20(a) and the processing fee set forth in § 1.17(i) of this chapter [emphasis added]. *See also* MPEP 1481.01.

U.S. Patent and Trademark Office assignment records disclose that an assignment to "E, TURBOTOUCH TECHNOLOGY TOUCH, INC., TAOYUAN (TW)." was recorded on October 21, 2003 and corrected the second inventor's name on October 25, 2004. Accordingly, issuance

of a certificate of correction would not be proper for "eTurboTouchTechnology Inc., Jhongli City, Taoyuan County, (TW)," since the request was submitted **after** issuance of the above patent.

Telephone inquiries concerning this decision on petition should be directed to the undersigned at (571) 272-3208.

/KOC/
Karen Creasy
Petitions Examiner
Office of Petitions

PTO/SB/66 (03-09)
Approved for use through 03/31/2012. OMB 0651-0016
U.S. Patent and Trademark Office: U.S. DEPARTMENT OF COMMERCE
Under the Paperwork Reduction Act of 1995, no persons are required to respond to a collection of information unless it displays valid OMB control number.

PETITION TO ACCEPT UNINTENTIONALLY DELAYED PAYMENT OF MAINTENANCE FEE IN AN EXPIRED PATENT (37 CFR 1.378(c))

Patent Number	Issue Date (YYYY-MM-DD)	Application Number	Filing Date (YYYY-MM-DD)	Docket Number (if applicable)
7,066,887	2006-06-27	10/689,081	2003-10-21	P08024US00

CAUTION: Maintenance fee (and surcharge, if any) payment must correctly identify: (1) the patent number and (2) the application number of the actual U.S. application leading to issuance of that patent to ensure the fee(s) is/are associated with the correct patent. 37 CFR 1.366(c) and (d).

SMALL ENTITY
☒ Patentee claims, or has previously claimed, small entity status. See 37 CFR 1.27.

LOSS OF ENTITLEMENT TO SMALL ENTITY STATUS
☐ Patentee is no longer entitled to small entity status. See 37 CFR 1.27(g)

NOT Small Entity		Small Entity	
Fee	Code	Fee	Code
○ 3 ½ year	(1551)	◉ 3 ½ year	(2551)
○ 7 ½ year	(1552)	○ 7 ½ year	(2552)
○ 11 ½ year	(1553)	○ 11 ½ year	(2553)

SURCHARGE
The surcharge required by 37 CFR 1.20(i)(2) (Fee Code 1558) must be paid as a condition of accepting unintentionally delayed payment of the maintenance fee.

MAINTENANCE FEE (37 CFR 1.20(e)-(g))
The appropriate maintenance fee must be submitted with this petition.

STATEMENT
THE UNDERSIGNED CERTIFIES THAT THE DELAY IN PAYMENT OF THE MAINTENANCE FEE TO THIS PATENT WAS UNINTENTIONAL

PETITIONER(S) REQUEST THAT THE DELAYED PAYMENT OF THE MAINTENANCE FEE BE ACCEPTED AND THE PATENT REINSTATED

THIS PORTION MUST BE COMPLETED BY THE SIGNATORY OR SIGNATORIES

37 CFR 1.378(d) states: "Any petition under this section must be signed by an attorney or agent registered to practice before the Patent and Trademark Office, or by the patentee, the assignee, or other party in interest."

I certify, in accordance with 37 CFR 1.4(d)(4) that I am

◉ An attorney or agent registered to practice before the Patent and Trademark Office

○ A sole patentee

○ A joint patentee; I certify that I am authorized to sign this submission on behalf of all the other patentees.

○ A joint patentee; all of whom are signing this e-petition

○ The assignee of record of the entire interest

Under the Paperwork Reduction Act of 1995, no persons are required to respond to a collection of information unless it displays valid OMB control number.

Patent Practitioner			
A signature of the applicant or representative is required in accordance with 37 CFR 1.33 and 10.18. Please see 37 CFR 1.4(d) for the form of the signature			
Signature	/Douglas E. Jackson/	Date (YYYY-MM-DD)	2011-02-03
Name	Douglas E. Jackson	Registration Number	28518

This collection of information is required by 37 CFR 1.378(c). The information is required to obtain or retain a benefit by the public which is to file (and by the USPTO to process) an application. Confidentiality is governed by 35 U.S.C. 122 and 37 CFR 1.11 and 1.14. This collection is estimated to take 1 hour to complete, including gathering, preparing, and submitting the completed application form to the USPTO. Time will vary depending upon the individual case. Any comments on the amount of time you require to complete this form and/ or suggestions for reducing this burden, should be sent to the Chief Information Officer, U.S. Patent and Trademark Office, U.S. Department of Commerce, P.O. Box 1450, Alexandria, VA 22313-1450. DO NOT SEND FEES OR COMPLETED FORMS TO THIS ADDRESS. **This form can only be used when in conjunction with EFS-Web. If this form is mailed to the USPTO, it may cause delays in reinstating the patent.**

Privacy Act Statement

The Privacy Act of 1974 (P.L. 93-579) requires that you be given certain information in connection with your submission of the attached form related to a patent application or patent. Accordingly, pursuant to the requirements of the Act, please be advised that: (1) the general authority for the collection of this information is 35 U.S.C. 2(b)(2); (2) furnishing of the information solicited is voluntary; and (3) the principal purpose for which the information is used by the U.S. Patent and Trademark Office is to process and/or examine your submission related to a patent application or patent. If you do not furnish the requested information, the U.S. Patent and Trademark Office may not be able to process and/or examine your submission, which may result in termination of proceedings or abandonment of the application or expiration of the patent.

The information provided by you in this form will be subject to the following routine uses:

1. The information on this form will be treated confidentially to the extent allowed under the Freedom of Information Act (5 U.S.C. 552) and the Privacy Act (5 U.S.C. 552a). Records from this system of records may be disclosed to the Department of Justice to determine whether the Freedom of Information Act requires disclosure of these records.

2. A record from this system of records may be disclosed, as a routine use, in the course of presenting evidence to a court, magistrate, or administrative tribunal, including disclosures to opposing counsel in the course of settlement negotiations.

3. A record in this system of records may be disclosed, as a routine use, to a Member of Congress submitting a request involving an individual, to whom the record pertains, when the individual has requested assistance from the Member with respect to the subject matter of the record.

4. A record in this system of records may be disclosed, as a routine use, to a contractor of the Agency having need for the information in order to perform a contract. Recipients of information shall be required to comply with the requirements of the Privacy Act of 1974, as amended, pursuant to 5 U.S.C. 552a(m).

5. A record related to an International Application filed under the Patent Cooperation Treaty in this system of records may be disclosed, as a routine use, to the International Bureau of the World Intellectual Property Organization, pursuant to the Patent Cooperation Treaty.

6. A record in this system of records may be disclosed, as a routine use, to another federal agency for purposes of National Security review (35 U.S.C. 181) and for review pursuant to the Atomic Energy Act (42 U.S.C. 218(c)).

7. A record from this system of records may be disclosed, as a routine use, to the Administrator, General Services, or his/her designee, during an inspection of records conducted by GSA as part of that agency's responsibility to recommend improvements in records management practices and programs, under authority of 44 U.S.C. 2904 and 2906. Such disclosure shall be made in accordance with the GSA regulations governing inspection of records for this purpose, and any other relevant (i.e., GSA or Commerce) directive. Such disclosure shall not be used to make determinations about individuals.

8. A record from this system of records may be disclosed, as a routine use, to the public after either publication of the application pursuant to 35 U.S.C. 122(b) or issuance of a patent pursuant to 35 U.S.C. 151. Further, a record may be disclosed, subject to the limitations of 37 CFR 1.14, as a routine use, to the public if the record was filed in an application which became abandoned or in which the proceedings were terminated and which application is referenced by either a published application, an application open to public inspections or an issued patent.

9. A record from this system of records may be disclosed, as a routine use, to a Federal, State, or local law enforcement agency, if the USPTO becomes aware of a violation or potential violation of law or regulation.

UNITED STATES PATENT AND TRADEMARK OFFICE

Commissioner for Patents
United States Patent and Trademark Office
P.O. Box 1450
Alexandria, VA 22313-1450
www.uspto.gov

In re Patent No. 7066887
Issue Date: June 27,2006
Application No. 10689081
Filed: October 21,2003
Attorney Docket No. P08024US00/RFH

:
:DECISION GRANTING PETITION
:UNDER 37 CFR 1.378(c)
:

This is a decision on the electronic petition, filed February 3,2011 ,under 37 CFR 1.378(c) to accept the unintentionally delayed payment of the 3.5 year maintenance fee for the above-identified patent.

The petition is **GRANTED**.

The maintenance fee is accepted, and the above-identified patent reinstated as of February 3,2011 . This decision also constitutes notice that the fee has been accepted. An electronic copy of the petition and this decision has been created as an entry in the Image File Wrapper. Nevertheless, petitioner should print and retain an independent copy.

Telephone inquiries related to this electronic decision should be directed to the Electronic Business Center at 1-866-217-9197.

UNITED STATES PATENT AND TRADEMARK OFFICE

Commissioner for Patents
United States Patent and Trademark Office
P.O. Box 1450
Alexandria, VA 22313-1450
www.uspto.gov

PATENT DEPARTMENT (51851)
KILPATRICK TOWNSEND & STOCKTON LLP
1001 WEST FOURTH STREET
WINSTON-SALEM, NC 27101

MAILED

JAN 24 2012

OFFICE OF PETITIONS

In re Application of Shahoian et al. :
Application No. 10/689,130 :
Filed: October 20, 2003 :
Attorney Docket No. IMM151 :

DECISION ON APPLICATION
FOR PATENT TERM ADJUSTMENT

This is a decision responding to the "Request for Reconsideration of Patent Term Adjustment Determination" filed December 9, 2011, which is being treated as a petition under 37 C.F.R. § 1.705(b) requesting the initial determination of patent term adjustment be corrected from oen thousand six hundred eleven (1,611) days to five hundred forty-one (541) days.

The petition is **granted**.

The Office has updated the Office's PALM database to reflect the correct Patent Term Adjustment determination at the time of the mailing of the Notice of Allowance is 541 days. A copy of an updated PALM screen showing the correct determination is enclosed.

The Office mailed a Determination of Patent Term Adjustment under 35 U.S.C. 154(b) in the application advising Applicants of a patent term adjustment to date of 1,611 days. In response, Applicants timely filed the instant petition with payment of the issue fee.

Applicants indicate the Office improperly calculated a 1,031-day period of Office delay and a 39-day period of Office delay.

Issue 1

The 1,031-day increase in patent term adjustment was entered under 37 C.F.R. § 1.703(a)(4), which indicates the period of Office delay includes:

> The number of days, if any, in the period beginning on the day after the date that is four months after the date an appeal brief in compliance with § 41.37 of this title was filed and ending on the date of mailing of any of an examiner's answer under § 41.39 of this title, an action under 35 U.S.C. 132, or a notice of allowance under 35 U.S.C. 151, whichever occurs first[.]

In this case, the Office filed an examiner's answer within four months of the submission of the appeal brief. Therefore, the Office agrees the Office's entry of the 1,031-day increase in patent term adjustment was improper.

Issue 2

The 39-day increase in patent term adjustment was entered under 37 C.F.R. § 1.703(a)(5), which indicates the period of Office delay includes:

> The number of days, if any, in the period beginning on the day after the date that is four months after the date of a final decision by the Board of Patent Appeals and Interferences or by a Federal court in an appeal under 35 U.S.C. 141 or a civil action under 35 U.S.C. 145 or 146 where at least one allowable claim remains in the application and ending on the date of mailing of either an action under 35 U.S.C. 132 or a notice of allowance under 35 U.S.C. 151, whichever occurs first[.]

The Board decision affirmed the examiner's rejection of all the pending claims. Therefore, the Office agrees the Office's entry of a 39-day increase in patent term adjustment was improper.

Conclusion

In view of the prior discussion, the correct patent term adjustment at the time of mailing of the notice of allowance is 541 days

Submission of the $200.00 fee set forth in 37 C.F.R. § 1.18(e) is acknowledged. No additional fee is required.

Applicants are reminded that any delays by the Office pursuant to 37 C.F.R. §§ 1.702(a)(4) and 1.702(b) and any applicant delays under 37 C.F.R. § 1.704(c)(10) will be calculated at the time of the issuance of the patent and applicants will be notified of the revised patent term adjustment to be indicated on the patent in the Issue Notification letter that is mailed to applicants approximately three weeks prior to issuance.

The Office of Data Management has been advised of this decision. This matter is being referred to the Office of Data Management for issuance of the patent.

Telephone inquiries specific to this decision should be directed to Senior Petitions Attorney Steven Brantley at (571) 272-3203.

Charles Steven Brantley
Senior Petitions Attorney
Office of Petitions

Enclosure: Copy of REVISED PALM screen

PTA/PTE Information | Patent Term Adjustment | Patent Term Extension

Application Number*: 10689130 Search Explanation of PTA Calculation Explanation of PTE Calculation

PTA Calculations for Application: 10689130

Application Filing Date	10/20/2003	OverLapping Days Between (A and B) or (A and C)	0
Issue Date of Patent		Non-Overlapping USPTO Delays:	1611
A Delays	1611	PTO Manual Adjustment	-1070
B Delays	0	Applicant Delay (APPL)	0
C Delays	0	Total PTA (days)	541

* - Sorted Column

File Contents History

Action Number	Action Recorded Date	Action Due Date	Action Code	Action Description	Duration PTO	Duration APPL	Parent Action Number
89	01/24/2012		P028	Adjustment of PTA Calculation by PTO		1070	0
81	09/12/2011		MN/=.	Mail Notice of Allowance			0
80	09/11/2011		OAR	Office Action Review			0
79	09/11/2011		OAR	Office Action Review			0
78	09/11/2011		IREV	Issue Revision Completed			0
77	09/11/2011		DVER	Document Verification			0
76	09/11/2011		N/=.	Notice of Allowance Data Verification Completed			0
75	09/07/2011		EX.R	Reasons for Allowance			0
74	09/07/2011		CNTA	Allowability Notice			0
70	09/02/2011		FWDX	Date Forwarded to Examiner			0
71	08/16/2011		IDSC	Information Disclosure Statement considered			0
69	08/16/2011		A...	Response after Non-Final Action			0
68	08/16/2011		M844	Information Disclosure Statement (IDS) Filed			0
67	08/16/2011		C614	New or Additional Drawing Filed			0
66	08/16/2011		WIDS	Information Disclosure Statement (IDS) Filed			0
65	05/23/2011	04/14/2011	MCTNF	Mail Non-Final Rejection	39		57
64	05/20/2011		OAR	Office Action Review			0
63	05/20/2011		CTNF	Non-Final Rejection			0
62	02/11/2011		FWDX	Date Forwarded to Examiner			0
61	02/11/2011		AMSB	Amendment Submitted/Entered with Filing of CPA/RCE			0
60	02/11/2011		RCEX	Request for Continued Examination (RCE)			0
59	02/11/2011		ABN9	Disposal for a RCE / CPA / R129			0
58	02/11/2011		BRCE	Workflow - Request for RCE - Begin			0
57	12/14/2010	02/17/2008	MAPDA	Mail BPAI Decision on Appeal - Affirmed	1031		41
56	12/13/2010		APDA	BPAI Decision - Examiner Affirmed			0
54	03/09/2009		AP_DK_M	Docketing Notice Mailed to Appellant			0
53	03/09/2009		APAS	Assignment of Appeal Number			0
52	12/16/2008		APWD	Appeal Awaiting BPAI Docketing			0
51	10/06/2008		ARBP	Appeal ready for BPAI review			0
50	06/07/2008		TCWD	Appeal ready for BPAI docketing			0
49	06/06/2008		MM327	Mail Miscellaneous Communication to Applicant			0
48	06/06/2008		M327	Miscellaneous Communication to Applicant - No Action Count			0
47	01/25/2008		TCRD	Return of Undocketed appeal to the TC			0
46	01/25/2008		PACC	Exam. Ans. Review Complete			0
45	01/09/2008		MAPEA	Mail Examiner's Answer			0
44	01/07/2008		APEA	Examiner's Answer to Appeal Brief			0
43	10/29/2007		APBR	Appeal Brief Review Complete			0
42	10/29/2007		FWDX	Date Forwarded to Examiner			0
41	10/17/2007		AP.B	Appeal Brief Filed			0
40	08/17/2007		N/AP	Notice of Appeal Filed			0
39	05/17/2007		MCTFR	Mail Final Rejection (PTOL - 326)			0
38	05/14/2007		CTFR	Final Rejection			0
37	03/06/2007		FWDX	Date Forwarded to Examiner			0
36	02/27/2007		A...	Response after Non-Final Action			0
35	11/29/2006		MCTNF	Mail Non-Final Rejection			0
34	11/27/2006		CTNF	Non-Final Rejection			0
33	09/21/2006		FWDX	Date Forwarded to Examiner			0
32	09/14/2006		A...	Response after Non-Final Action			0
31	06/14/2006	12/20/2004	MCTNF	Mail Non-Final Rejection	541		0.5
30	06/12/2006		CTNF	Non-Final Rejection			0
27	04/10/2006		DOCK	Case Docketed to Examiner in GAU			0
26	03/21/2006		DOCK	Case Docketed to Examiner in GAU			0
25	03/03/2006		DOCK	Case Docketed to Examiner in GAU			0
24	03/16/2005		DOCK	Case Docketed to Examiner in GAU			0
21	09/16/2004		DOCK	Case Docketed to Examiner in GAU			0

29	09/02/2004	IDSC	Information Disclosure Statement considered	0
23	09/02/2004	RCAP	Reference capture on IDS	0
22.7	09/02/2004	M844	Information Disclosure Statement (IDS) Filed	0
22	09/02/2004	WIDS	Information Disclosure Statement (IDS) Filed	0
20	06/22/2004	TSSCOMP	IFW TSS Processing by Tech Center Complete	0
19	06/22/2004	DOCK	Case Docketed to Examiner in GAU	0
15	06/04/2004	WROIPE	Application Return from OIPE	0
14	06/04/2004	ROIPE	Application Return TO OIPE	0
13	06/04/2004	OIPE	Application Dispatched from OIPE	0
12	06/04/2004	COMP	Application Is Now Complete	0
17	05/21/2004	A.PE	Preliminary Amendment	0
11	05/21/2004	ADDFLFEE	Additional Application Filing Fees	0
10	05/21/2004	OATHDECL	A statement by one or more inventors satisfying the requirement under 35 USC 115, Oath of the Applic	0
9	05/21/2004	CORRDRW	Applicant has submitted new drawings to correct Corrected Papers problems	0
8	05/21/2004	OSPECNFD	Ommited Specification Pages. Applicant has Petitioned that the Filing Date not be changed and the P	0
7	03/23/2004	INCD	Notice Mailed--Application Incomplete--Filing Date Assigned	0
28	03/10/2004	IDSC	Information Disclosure Statement considered	0
18	03/10/2004	RCAP	Reference capture on IDS	0
16.7	03/10/2004	M844	Information Disclosure Statement (IDS) Filed	0
16	03/10/2004	WIDS	Information Disclosure Statement (IDS) Filed	0
4	01/14/2004	L194	Cleared by OIPE CSR	0
3	01/14/2004	CLSS	CASE CLASSIFIED BY OIPE	0
2	12/05/2003	SCAN	IFW Scan & PACR Auto Security Review	0
1	10/20/2003	IEXX	Initial Exam Team nn	0
0.5	10/20/2003	EFILE	Filing date	0

Export to: Excel

UNITED STATES PATENT AND TRADEMARK OFFICE

COMMISSIONER FOR PATENTS
UNITED STATES PATENT AND TRADEMARK OFFICE
P.O. BOX 1450
ALEXANDRIA, VA 22313-1450
www.uspto.gov

Paper No.

BEMIS COMPANY, INC.
PATENT AND TRADEMARK DEPARTMENT
2200 BADGER AVENUE
OSHKOSH WI 54904

MAILED
NOV 30 2010
OFFICE OF PETITIONS

In re Application of :
Papenfuss et al. :
Application No. 10/689,478 : ON APPLICATION FOR
Filed: 10/20/2003 : PATENT TERM ADJUSTMENT
Atty Docket No. :
20717 :

This is in response to the "PETITION UNDER 37 C.F.R. § 1.705," filed on August 10, 2010, which is treated as a petition under 37 CFR 1.705(b). Applicants request that the patent term adjustment be increased from 0 days to at least 832 days. Applicants request this correction in part on the basis that the Office will take in excess of three years to issue this patent.

To the extent the instant application for patent term adjustment requests reconsideration of the patent term adjustment as it relates to the Office's failure to issue the patent within 3 years of the filing date, the application for patent term adjustment under 37 CFR 1.705(b) is **DISMISSED as PREMATURE**.

Knowledge of the actual date the patent issues is required to calculate the amount, if any, of additional patent term patentee is entitled to for Office failure to issue the patent within 3 years. See § 1.702(b). The computer will not undertake the § 1.702(b) calculation until the actual date of issuance of the patent has been determined. Likewise, the computer will not calculate any further Office delay under § 1.702(a)(4) or applicant delay under § 1.704(c)(10) until the actual date of issuance of the patent has been determined. As such, the Office can not make a determination on the correctness of the patent term adjustment until the patent has issued.

Requesting reconsideration of the patent term adjustment to be indicated on the patent under 37 CFR 1.705(b) based on the initial determination of patent term adjustment and a projected

issuance date of the patent is premature. Accordingly, it is appropriate to dismiss as premature such a request.

Rather than file an application for patent term adjustment under 37 CFR 1.705(b) contesting the 37 CFR 1.702(b) calculation at the time of the mailing of the notice of allowance, applicants are advised that they may wait until the time of the issuance of the patent and file a request for reconsideration of the patent term adjustment pursuant to 37 CFR 1.705(d). As the USPTO does not calculate the amount of time earned pursuant to 37 CFR 1.702(b) until the time of the issuance of the patent, the Office will consider any request for reconsideration of the patent term adjustment due to an error in the calculation of 37 CFR 1.702(b) to be timely if the request for reconsideration is filed within two months of the issuance of the patent. However, as to all other bases for contesting the initial determination of patent term adjustment received with the notice of allowance, applicant must timely file an application for patent term adjustment prior to the payment of the issue fee[1].

With regard to the request under 37 CFR 1.705(b), the application for patent term adjustment is **DISMISSED**.

Patentees are given **TWO (2) MONTHS** to respond to this decision. No extensions of time will be granted under § 1.136.

On June 24, 2010, the Office mailed a Determination of Patent Term Adjustment under 35 U.S.C. 154(b) in the above-identified application. Applicant was advised that the patent term adjustment to date was 0 days (217 days of Office delay reduced by 318 days of applicant delay).

---

[1] For example, if applicant disputes both the calculation of patent term adjustment under 37 CFR 1.702(a)(1) for Office failure to mail a first Office action or notice of allowance not later than fourteen months after the date on which the application was filed and under 37 CFR 1.702(b) for Office failure to issue a patent within three years of the actual filing date of the application, then applicant must still timely file an application for patent term adjustment prior to the payment of the issue fee to contest the calculation of Office delay in issuing a first Office action or notice of allowance. See 37 CFR 1.705(b) and 35 U.S.C. 154(b)(3)(B). A dispute as to the calculation of the §1.702(a)(1) period raised on request for reconsideration of patent term adjustment under 37 CFR 1.705(d) will be dismissed as untimely filed.

The subject application was timely filed on August 10, 2010.[2]

Applicants assert entitlement to an additional period of adjustment of 86 days for Office delay in connection with the reply filed on May 13, 2009. Specifically, on August 20, 2009, a non-final Office action was mailed in response to the reply filed on May 13, 2009. On December 8, 2009, however, the non-final Office action was withdrawn, and a new non-final Office action was mailed. Applicants assert entitlement to a period of adjustment because that the final Office action mailed on December 8, 2009, was mailed four months and 86 days after day the date the reply was filed on May 13, 2009.

35 U.S.C. 154(b)(1)(A)(i) provides that:

— Subject to the limitations under paragraph (2), if the issue of an original patent is delayed due to the failure of the Patent and Trademark Office to—

(ii) respond to a reply under section 132, or to an appeal taken under section 134, within 4 months after the date on which the reply was filed or the appeal was taken;

37 CFR § 1.702 provides that:

(a) Failure to take certain actions within specified time frames. Subject to the provisions of 35 U.S.C. 154(b) and this subpart, the term of an original patent shall be adjusted if the issuance of the patent was delayed due to the failure of the Office to:

(2) Respond to a reply under 35 U.S.C. 132 or to an appeal taken under 35 U.S.C. 134 not later than four months after the date on which the reply was filed or the appeal was taken;

37 CFR § 1.703 provides, in pertinent part, that:

(a) The period of adjustment under § 1.702(a) is the sum of the following periods:

[2] A review of Office PALM records indicates that the issue fee was paid on September 2, 2010.

(2) The number of days, if any, in the period beginning on the day after the date that is four months after the date a reply under § 1.111 was filed and ending on the date of mailing of either an action under 35 U.S.C. 132, or a notice of allowance under 35 U.S.C. 151, whichever occurs first;

Applicants' arguments and evidence have been considered, but have not been found persuasive. Pursuant to 35 U.S.C. 154(b)(1)(A)(i)(ii), applicants are only entitled to day-to-day restoration of term lost as a result of delay created by the failure of the Office to respond to a reply under section 132, or to an appeal taken under section 134, within 4 months after the date on which the reply was filed or the appeal was taken. In this regard, the Office did respond within four (4) months to petitioner's amendment filed on May 13, 2009, by issuing the Office action mailed on August 20, 2009. The fact that the outstanding Office action was withdrawn and a new Office action was mailed on December 8, 2009, does not alter the fact that the Office did respond to the reply within 4 months after the date on which the reply was filed.

Thus, it is concluded that, in this instance, the withdrawal of the Office action mailed on August 20, 2009, and the mailing of a new action under 35 U.S.C. 132 on December 8, 2009, did not constitute a delay by the Office in the issuance of the patent within the meaning of 35 U.S.C. 154(b).

In view thereof, no change to the patent term adjustment at the time of mailing of the notice of allowance is warranted; the petition is **DISMISSED**.

The Office acknowledges submission of the $200.00 fee set forth in 37 CFR 1.18(e). No additional fees are required.

The Office of Data Management has been advised of this decision. The application is thereby forwarded to the Office of Data Management for issuance of the patent. The patent term adjustment indicated on the patent (as shown on the Issue Notification mailed about three weeks prior to patent issuance) will include any additional adjustment accrued both for Office delay in issuing the patent more than four months after payment of the issue fee and satisfaction of all outstanding requirements, and if applicable, for the Office taking in excess of three years to issue the patent (to the extent that the

three-year period does not overlap with periods already accorded).

Telephone inquiries specific to this matter should be directed to the undersigned at (571) 272-3231.

Douglas I. Wood
Senior Petitions Attorney
Office of Petitions

UNITED STATES PATENT AND TRADEMARK OFFICE

Commissioner for Patents
United States Patent and Trademark Office
P.O. Box 1450
Alexandria, VA 22313-1450
www.uspto.gov

MAILED

MAY 23 2011

OFFICE OF PETITIONS

MCKENNA LONG & ALDRIDGE LLP
1900 K STREET, NW
WASHINGTON, DC 20006

In re Application of	:	
Eugenio Cruz Garcia et al	:	
Application No. 10/689,510	:	DECISION ON PETITION
Filed: October 21, 2003	:	TO MAKE SPECIAL UNDER
Attorney Docket No. 5724.017.23	:	37 CFR 1.102(c)(1)
	:	

This is a decision on the petition under 37 CFR 1.102(c)(1), filed February 4, 2004, to make the above-identified application special based on applicant's age as set forth in M.P.E.P. § 708.02, Section IV.

The petition is **GRANTED**.

A grantable petition to make an application special under 37 CFR 1.102(c)(1) and MPEP § 708.02, Section IV: Applicant's Age must be accompanied by evidence showing that at least one of the applicants is 65 years of age, or more, such as a birth certificate or a statement by applicant. No fee is required

The instant petition includes a statement from inventor Vicente Sabater stating that he is over 65 years of age. Accordingly, the above-identified application has been accorded "special" status.

Telephone inquiries concerning this decision should be directed to Irvin Dingle at 571-272-3210.

All other inquiries concerning either the examination or status of the application should be directed to the Technology Center.

This matter is being referred to the Technology Center Art Unit 3633 for action on the merits commensurate with this decision.

Irvin Dingle
Petitions Examiner
Office of Petitions

UNITED STATES PATENT AND TRADEMARK OFFICE

Commissioner for Patents
United States Patent and Trademark Office
P.O. Box 1450
Alexandria, VA 22313-1450
www.uspto.gov

Buckley, Maschoff & Talwalkar LLC/
Intel Corporation
50 Locust Avenue
New Canaan CT 06840

MAILED

FEB 16 2011

OFFICE OF PETITIONS

In re Application of :
Hill et al. :
Application No. 10/689,789 : DECISION ON PETITION
Filed: October 20, 2003 :
Attorney Docket No. P17630 :

This is a decision on the petition under the unintentional provisions of 37 CFR 1.137(b), filed December 29, 2010, to revive the above-identified application.

The petition is **GRANTED.**

This application became abandoned for failure to timely submit the issue and publication fees, as required by the Notice of Allowance and Fee (s) Due, which was mailed August 6, 2010. The Notice of Allowance and Fee (s) Due and the Notice of Allowability set a three (3) month statutory period for reply. Extensions of time were not available under the provisions of 37 CFR 1.136(a). Accordingly, this application became abandoned on November 7, 2010. A Notice of Abandonment was mailed on November 19, 2010.

The petition satisfies the requirements of 37 CFR 1.137(b) in that petitioner has supplied (1) the reply in the form of payment of the $1510 issue and publication fees of $300, (2) the petition fee of $1620; and (3) a proper statement of unintentional delay.

Telephone inquiries concerning this decision should be directed to the undersigned at (571) 272-3215.

This application is being referred to the Office of Data Management for further processing.

Charlema Grant
Petitions Attorney
Office of Petitions

UNITED STATES PATENT AND TRADEMARK OFFICE

Commissioner for Patents
United States Patent and Trademark Office
P.O. Box 1450
Alexandria, VA 22313-1450
www.uspto.gov

LOS ALAMOS NATIONAL SECURITY, LLC
LOS ALAMOS NATIONAL LABORATORY
PPO. BOX 1663, LC/IP, MS A187
LOS ALAMOS NM 87545

MAILED

FEB 03 2011

OFFICE OF PETITIONS

In re Patent No. 7,079,924	:	
Issued: July 18, 2006	:	
Application No. 10/689,924	:	ON PETITION
Filed: October 17, 2003	:	
Attorney Docket No. S-99,917	:	

This is a decision on the petition under 37 CFR 1.378(c), filed December 13, 2010, to accept the delayed payment of a maintenance fee for the above-identified patent.

The petition is **GRANTED**.

This patent expired on July 19, 2010 for failure to pay the three and one-half year maintenance fee. Since this petition was submitted within twenty-four months after the six-month grace period provided in 37 CFR 1.362(e), the petition was timely filed under the provisions of 37 CFR 1.378(c).

The maintenance fee is hereby accepted and the above-identified patent is reinstated as of the mail date of this decision.

Further, it is not apparent whether the person signing the instant petition was ever given a power of attorney or authorization of agent regarding this patent. In accordance with 37 CFR 1.34(a), the signature appearing on the petition shall constitute a representation to the United States Patent and Trademark Office that he/she is authorized to represent the particular party in whose behalf he/she acts.

Telephone inquiries concerning this decision should be directed to the undersigned at (571) 272-7751.

Joan Olszewski
Petitions Examiner
Office of Petitions

UNITED STATES PATENT AND TRADEMARK OFFICE

Commissioner for Patents
United States Patent and Trademark Office
P.O. Box 1450
Alexandria, VA 22313-1450
www.uspto.gov

GLENN PATENT GROUP
3475 EDISON WAY, SUITE L
MENLO PARK CA 94025

MAILED

OCT 07 2010

OFFICE OF PETITIONS

In re Application of	:	
Quigley et al.	:	
Application No. 10/690,145	:	DECISION GRANTING PETITION
Filed: October 20, 2003	:	UNDER 37 CFR 1.78(a)(3)
Attorney Docket No. AOL0055	:	

This is a decision on the petition under 37 CFR 1.78(a)(3), filed July 21, 2010, to accept an unintentionally delayed claim under 35 U.S.C. § 120 for the benefit of priority to the prior-filed nonprovisional application as set forth in the amendment filed concurrently with the instant petition.

The petition is **GRANTED**.

A petition for acceptance of a claim for late priority under 37 CFR 1.78(a)(3) is only applicable to those applications filed on or after November 29, 2000. Further, the petition is appropriate only after the expiration of the period specified in 37 CFR 1.78(a)(2)(ii). In addition, the petition under 37 CFR 1.78(a)(3) must be accompanied by:

(1) the reference required by 35 U.S.C. § 120 and 37 CFR 1.78(a)(2)(i) of the prior-filed application, unless previously submitted;
(2) the surcharge set forth in § 1.17(t); and
(3) a statement that the entire delay between the date the claim was due under 37 CFR 1.78(a)(2)(ii) and the date the claim was filed was unintentional. The Commissioner may require additional information where there is a question whether the delay was unintentional.

The instant nonprovisional application was filed after November 29, 2000, and the claim herein for the benefit of priority to the prior-filed nonprovisional application is submitted after expiration of the period specified by 37 CFR 1.78(a)(2)(ii). Therefore, this is a proper petition under 37 CFR 1.78(a)(3).

The petition complies with the requirements for a grantable petition under 37 CFR 1.78(a)(3) in that (1) a reference to the prior-filed nonprovisional application has been included in an amendment to the first sentence of the specification following the title, as provided by 37 CFR 1.78(a)(2)(iii); (2) the surcharge fee required by 37 CFR 1.17(t) has been submitted; and (3) the petition contains a proper statement of unintentional delay. Accordingly, having found that the instant petition for acceptance of an unintentionally delayed claim for the benefit of priority under 35 U.S.C. § 120 to the prior-filed nonprovisional application satisfies the conditions of 37 CFR 1.78(a)(3), the petition is granted.

The granting of the petition to accept the delayed benefit claim to the prior-filed application under 37 CFR 1.78(a)(3) should not be construed as meaning that the instant application is entitled to the benefit of the prior-filed application. In order for the instant application to be entitled to the benefit of the prior-filed application, all other requirements under 35 U.S.C. § 120 and 37 CFR 1.78(a)(1) and (a)(2) must be met. Similarly, the fact that the corrected Filing Receipt accompanying this decision on petition includes the prior-filed application should not be construed as meaning that applicant is entitled to the claim for benefit of priority to the prior-filed application noted thereon. Accordingly, the examiner will, in due course, consider this benefit claim and determine whether the instant application is entitled to the benefit of the earlier filing date.

A corrected Filing Receipt, which includes the priority claim to the prior-filed nonprovisional application, accompanies this decision on petition.

Further, although the petition is signed by a registered patent agent, it does not set forth a USPTO registration number. Petitioner should note that all documents submitted before the United States Patent and Trademark Office by a registered patent agent must contain his/her registration number. However, the accompanying document does include the signature and registration number for Michael A. Glenn. Therefore, the petition is accepted as being properly signed.

Any inquiries concerning this decision may be directed to Joan Olszewski at (571) 272-7751.

This matter is being referred to Technology Center Art Unit 3693 for appropriate action on the amendment filed July 21, 2010, including consideration by the examiner of applicant's entitlement to claim benefit of priority under 35 U.S.C. § 120 to the prior-filed nonprovisional application.

/Liana Walsh/
Liana Walsh
Petitions Examiner
Office of Petitions

ATTACHMENT: Corrected Filing Receipt

UNITED STATES PATENT AND TRADEMARK OFFICE

UNITED STATES DEPARTMENT OF COMMERCE
United States Patent and Trademark Office
Address: COMMISSIONER FOR PATENTS
P.O. Box 1450
Alexandria, Virginia 22313-1450
www.uspto.gov

APPLICATION NUMBER	FILING or 371(c) DATE	GRP ART UNIT	FIL FEE REC'D	ATTY.DOCKET.NO	TOT CLAIMS	IND CLAIMS
10/690,145	10/20/2003	3693	1980	AOL0055	80	3

CONFIRMATION NO. 6038

CORRECTED FILING RECEIPT

22862
GLENN PATENT GROUP
3475 EDISON WAY, SUITE L
MENLO PARK, CA 94025

OC000000043628224

Date Mailed: 09/22/2010

Receipt is acknowledged of this non-provisional patent application. The application will be taken up for examination in due course. Applicant will be notified as to the results of the examination. Any correspondence concerning the application must include the following identification information: the U.S. APPLICATION NUMBER, FILING DATE, NAME OF APPLICANT, and TITLE OF INVENTION. Fees transmitted by check or draft are subject to collection. Please verify the accuracy of the data presented on this receipt. **If an error is noted on this Filing Receipt, please submit a written request for a Filing Receipt Correction. Please provide a copy of this Filing Receipt with the changes noted thereon. If you received a "Notice to File Missing Parts" for this application, please submit any corrections to this Filing Receipt with your reply to the Notice. When the USPTO processes the reply to the Notice, the USPTO will generate another Filing Receipt incorporating the requested corrections**

Applicant(s)

Benjamin Quigley, Reston, VA;
Robert Sandler, Herndon, VA;
Fletcher Jones, Bethesda, MD;
Rajesh Mahajan, Fremont, CA;
Prakash Muppirala, San Jose, CA;
David Lowe, Foster City, CA;
Laura Price, Durham, NC;
Seth Goldstein, San Francisco, CA;
Venkatesh Subramanya, Banglore, INDIA;
Jai Rawat, Sunnyvale, CA;

Power of Attorney:
Michael Glenn--30176
Donald Hendricks--40355
James Bramson--41632
Christopher Peil--45005
Ivy Mei--46925
Julia Thomas--52283

Domestic Priority data as claimed by applicant
This application is a CIP of 10/313,748 12/06/2002 PAT 7,346,587

Foreign Applications

If Required, Foreign Filing License Granted: 01/28/2004

The country code and number of your priority application, to be used for filing abroad under the Paris Convention, is **US 10/690,145**

Projected Publication Date: Not Applicable

Non-Publication Request: No

Early Publication Request: No
Title

System and method for electronic wallet conversion

Preliminary Class

705

PROTECTING YOUR INVENTION OUTSIDE THE UNITED STATES

Since the rights granted by a U.S. patent extend only throughout the territory of the United States and have no effect in a foreign country, an inventor who wishes patent protection in another country must apply for a patent in a specific country or in regional patent offices. Applicants may wish to consider the filing of an international application under the Patent Cooperation Treaty (PCT). An international (PCT) application generally has the same effect as a regular national patent application in each PCT-member country. The PCT process **simplifies** the filing of patent applications on the same invention in member countries, but **does not result** in a grant of "an international patent" and does not eliminate the need of applicants to file additional documents and fees in countries where patent protection is desired.

Almost every country has its own patent law, and a person desiring a patent in a particular country must make an application for patent in that country in accordance with its particular laws. Since the laws of many countries differ in various respects from the patent law of the United States, applicants are advised to seek guidance from specific foreign countries to ensure that patent rights are not lost prematurely.

Applicants also are advised that in the case of inventions made in the United States, the Director of the USPTO must issue a license before applicants can apply for a patent in a foreign country. The filing of a U.S. patent application serves as a request for a foreign filing license. The application's filing receipt contains further information and guidance as to the status of applicant's license for foreign filing.

Applicants may wish to consult the USPTO booklet, "General Information Concerning Patents" (specifically, the section entitled "Treaties and Foreign Patents") for more information on timeframes and deadlines for filing foreign patent applications. The guide is available either by contacting the USPTO Contact Center at 800-786-9199, or it can be viewed on the USPTO website at http://www.uspto.gov/web/offices/pac/doc/general/index.html.

For information on preventing theft of your intellectual property (patents, trademarks and copyrights), you may wish to consult the U.S. Government website, http://www.stopfakes.gov. Part of a Department of Commerce initiative, this website includes self-help "toolkits" giving innovators guidance on how to protect intellectual property in specific countries such as China, Korea and Mexico. For questions regarding patent enforcement issues, applicants may call the U.S. Government hotline at 1-866-999-HALT (1-866-999-4158).

LICENSE FOR FOREIGN FILING UNDER

Title 35, United States Code, Section 184

Title 37, Code of Federal Regulations, 5.11 & 5.15

GRANTED

The applicant has been granted a license under 35 U.S.C. 184, if the phrase "IF REQUIRED, FOREIGN FILING LICENSE GRANTED" followed by a date appears on this form. Such licenses are issued in all applications where the conditions for issuance of a license have been met, regardless of whether or not a license may be required as set forth in 37 CFR 5.15. The scope and limitations of this license are set forth in 37 CFR 5.15(a) unless an earlier license has been issued under 37 CFR 5.15(b). The license is subject to revocation upon written notification. The date indicated is the effective date of the license, unless an earlier license of similar scope has been granted under 37 CFR 5.13 or 5.14.

This license is to be retained by the licensee and may be used at any time on or after the effective date thereof unless it is revoked. This license is automatically transferred to any related applications(s) filed under 37 CFR 1.53(d). This license is not retroactive.

The grant of a license does not in any way lessen the responsibility of a licensee for the security of the subject matter as imposed by any Government contract or the provisions of existing laws relating to espionage and the national security or the export of technical data. Licensees should apprise themselves of current regulations especially with respect to certain countries, of other agencies, particularly the Office of Defense Trade Controls, Department of State (with respect to Arms, Munitions and Implements of War (22 CFR 121-128)); the Bureau of Industry and Security, Department of Commerce (15 CFR parts 730-774); the Office of Foreign AssetsControl, Department of Treasury (31 CFR Parts 500+) and the Department of Energy.

NOT GRANTED

No license under 35 U.S.C. 184 has been granted at this time, if the phrase "IF REQUIRED, FOREIGN FILING LICENSE GRANTED" DOES NOT appear on this form. Applicant may still petition for a license under 37 CFR 5.12, if a license is desired before the expiration of 6 months from the filing date of the application. If 6 months has lapsed from the filing date of this application and the licensee has not received any indication of a secrecy order under 35 U.S.C. 181, the licensee may foreign file the application pursuant to 37 CFR 5.15(b).

UNITED STATES PATENT AND TRADEMARK OFFICE

Commissioner for Patents
United States Patent and Trademark Office
P.O. Box 1450
Alexandria, VA 22313-1450
www.uspto.gov

FISH & RICHARDSON P.C.
PO BOX 1022
MINNEAPOLIS MN 55440-1022

MAILED
JUL 18 2011
OFFICE OF PETITIONS

In re Patent of Elbaz et al.	:
Patent No. 7,925,610	: DECISION ON REQUEST FOR
Issue Date: April 12, 2011	: RECONSIDERATION OF
Application No. 10/690,328	: PATENT TERM ADJUSTMENT AND
Filed: October 21, 2003	: NOTICE OF INTENT TO
Attorney Docket No. 16113-0328001	: ISSUE CERTIFICATE OF CORRECTION
Title: DETERMINING A MEANING OF A KNOWLEDGE ITEM USING DOCUMENT-BASED INFORMATION	:

This is a decision on the petition filed on June 13, 2011, which is being treated as a petition under 37 CFR 1.705(d) requesting that the patent term adjustment indicated on the above-identified patent be corrected to indicate that the term of the above-identified patent is extended or adjusted by three hundred ninety-nine (399) days.

The petition to correct the patent term adjustment indicated on the above-identified patent is **GRANTED to the extent indicated below.**

BACKGROUND

On April 12, 2011, the above-identified application matured into U.S. Patent No. 7,925,610, with a revised patent term adjustment of 292 days. On June 13, 2011, Patentees timely submitted this request for reconsideration of patent term adjustment (with required $200.00 fee), asserting that the correct number of days of Patent Term Adjustment is 399.

Patentees disclose the Office failed to enter a 20 day reduction under 37 CFR 1.704(c)(8) in connection with the filing of a supplemental response, in the form of an Information Disclosure

Statement ("IDS") on May 3, 2010, after Applicants filed a reply on April 13, 2010.

In addition, Patentees maintain that the Office incorrectly calculated Office delay pursuant to 37 CFR 1.702(b). Patentees contend that the Office erred in subtracting from the "B delay" a period of time that was not "consumed by continued examination of the application." Specifically, Patentees argue that (after the filing of several requests for continued examination) the Office mailed a Notice of Allowance on December 7, 2010, thereby closing examination of the application on that date. Thus, Patentees argue no continued examination took place during the 127 day period from December 7, 2010 (the mailing date of the Notice of Allowance) until April 12, 2011 (the date the patent was issued). As such, Patentees maintain that the "B delay" should include the 127 days and be increased from 183 to 310 days. Patentees conclude that the correct patent term adjustment is 399 days (the sum of 520 days of "A delay" and 310 days of "B delay" minus 431 days Applicant).

RELEVANT STATUTE AND REGULATIONS WITH RESPECT TO "B DELAY ARGUMENT

The statutory basis for calculation of "B delay" is 35 U.S.C. 154(b)(1)(B) GUARANTEE OF NO MORE THAN 3-YEAR APPLICATION PENDENCY, which provides that:

Subject to the limitations under paragraph (2), if the issue of an original patent is delayed due to the failure of the United States Patent and Trademark Office to issue a patent within 3 years after the actual filing date of the application in the United States, not including –

(i) any time consumed by continued examination of the application requested by the applicant under section 132(b);

(ii) any time consumed by a proceeding under section 135(a), any time consumed by the imposition of an order under section 181, or any time consumed by appellate review by the Board of Patent Appeals and Interferences or by a Federal court; or

(iii) any delay in the processing of the application by the United States Patent and Trademark Office requested by the applicant except as permitted by paragraph (3)(C), the term of the patent shall be extended 1 day for each day after the end of that 3-year period until the patent is issued.

The implementing regulation, 37 CFR 1.702(b) provides that:

Subject to the provisions of 35 U.S.C. 154(b) and this subpart, the term of an original patent shall be adjusted if the issuance of the patent was delayed due to the failure of the Office to issue a patent within three years after the date on which the application was filed under 35 U.S.C. 111(a) or the national stage commenced under 35 U.S.C. 371(b) or (f) in an international application, but not including:

(1) Any time consumed by continued examination of the application under 35 U.S.C. 132(b);

(2) Any time consumed by an interference proceeding under 35 U.S.C. 135(a);

(3) Any time consumed by the imposition of a secrecy order under 35 U.S.C. 181;

(4) Any time consumed by review by the Board of Patent Appeals and Interferences or a Federal court; or

(5) Any delay in the processing of the application by the Office that was requested by the applicant.

OPINION

A review of the patent term adjustment calculations for the above-identified application reveals that the Office failed to enter a reduction for an IDS filed on May 3, 2010. After applicants filed a reply on April 13, 2010, Applicants submitted a supplemental reply or paper in the form of an IDS on May 3, 2010. The record does not support a conclusion that the examiner expressly requested the filing of the IDS. Further, a review of the IDS, filed May 3, 2010, reveals that Applicants did not include a statement under 37 CFR 1.704(d).[1] Thus, Applicants failed to engage in reasonable efforts to conclude prosecution

[1] Pursuant to 37 CFR § 1.704(d):

> A paper containing only an information disclosure statement in compliance with §§ 1.97 and 1.98 will not be considered a failure to engage in reasonable efforts to conclude prosecution (processing or examination) of the application under paragraphs (c)(6), (c)(8), (c)(9), or (c)(10) of this section if it is accompanied by a statement that each item of information contained in the information disclosure statement was first cited in any communication from a foreign patent office in a counterpart application and that this communication was not received by any individual designated in § 1.56(c) more than thirty days prior to the filing of the information disclosure statement. This thirty-day period is not extendable.

of the application. The period of adjustment should have been reduced by 20 days pursuant to 37 CFR 1.704(c)(8), counting the number of days beginning on the day after the date the initial reply was filed, April 14, 2010, and ending on the date that the IDS was filed, May 3, 2010. Accordingly, a period of reduction of 20 days will be entered.

Patentees' arguments with respect to calculation of the "B delay" period have been considered, but not found persuasive. The Office calculated the period of "B delay" pursuant to 35 U.S.C. 154(b)(1)(B)(i) and 37 CFR 1.702(b)(1) as 183 days based on the application having been filed under 35 U.S.C. 111(a) on October 21, 2003 and the patent not having issued as of the day after the three year date, October 22, 2006, and the first request for continued examination under 132(b) having been filed on April 23, 2007. In other words, the 127-day period beginning on the date of mailing of the notice of allowance to the date of issuance of the patent was considered time consumed by continued examination of an application under 35 U.S.C. 132(b) and was not included in the "B delay."

The Office's calculation of "B delay" is correct. The "B delay" is an adjustment entered if the issuance of the patent was delayed due to the failure of the Office to issue a patent within three years after the date on which the application was filed. However, the adjustment does not include, among other things, any time consumed by continued examination of the application at the request of the applicant under 35 U.S.C. 132(b)[2]. So, with respect to calculating the "B delay" where applicant has filed a request for continued examination, the period of adjustment is the number of days, if any, in the

---

[2] Pursuant to 35 U.S.C. 132(b) , 37 CFR 1.114 provides for continued examination of an application, as follows:

(a) If prosecution in an application is closed, an applicant may request continued examination of the application by filing a submission and the fee set forth in § 1.17(e) prior to the earliest of:

(1) Payment of the issue fee, unless a petition under § 1.313 is granted;

(2) Abandonment of the application; or

(3) The filing of a notice of appeal to the U.S. Court of Appeals for the Federal Circuit under 35 U.S.C. 141, or the commencement of a civil action under 35 U.S.C. 145 or 146, unless the appeal or civil action is terminated.

(b) Prosecution in an application is closed as used in this section means that the application is under appeal, or that the last Office action is a final action (§ 1.113), a notice of allowance (§ 1.311), or an action that otherwise closes prosecution in the application.

period beginning on the day after the date that is three years after the date on which the application was filed under 35 U.S.C. 111(a) or the national stage commenced under 35 U.S.C. 371(b) or (f) in an international application and ending on the date a patent was issued, but not including the number of days in the period beginning on the date on which a request for continued examination of the application under 35 U.S.C. 132(b) was filed and ending on the date the patent was issued.

Further, counting the period of time excluded from the "B delay" for the filing of a request for continued examination under 35 U.S.C. 132(b), from the date on which the request for continued examination is filed to the date the patent is issued is proper. Patentees do not dispute that time consumed by continued examination of an application under 35 U.S.C. 132(b) is properly excluded and that the calculation of the excluded period begins on the date of filing of the request for continued examination. At issue is what further processing or examination beyond the date of filing of the request for continued examination is not any time consumed by continued examination of the application under 35 U.S.C. 132(b). The USPTO indicated in September of 2000 in the final rule to implement the patent term adjustment provisions of the AIPA that once a request for continued examination under 35 U.S.C. 132(b) and 37 CFR 1.114 is filed in an application, any further processing or examination of the application, including granting of a patent, is by virtue of the continued examination given to the application under 35 U.S.C. 132(b) and CFR 1.114. See Changes to Implement Patent Term Adjustment under Twenty-Year Patent Term, 65 Fed. Reg. 56366, 56376 (Sept. 18, 2000) (response to comment 8). Thus, the excluded period begins with the filing of the request for continued examination and ends with the issuance of the patent.

Patentees' argument that the period of time after the issuance of a notice of allowance on a request for continued examination is not "any time consumed by continued examination requested by the applicant under section 132(b)" within the meaning of 35 U.S.C. 154(b)(1)(B)(i) is not availing. This limitation is not supported by the statutory language. Garcia v. United States, 469 U.S. 70, 75 (1984) ("only the most extraordinary showing of contrary intentions from [legislative history] would justify a

limitation on the 'plain meaning' of the statutory language"). BP Am. Prod. Co. v. Burton, 549 U.S. 84, 91 (2006) ("Unless otherwise defined, statutory terms are generally interpreted in accordance with their ordinary meaning"). The statute provides for a guarantee of no more than 3-year application pendency, by providing for an adjustment in the patent term:

First, "Subject to the limitations of paragraph (2)," means that the limitations of paragraph 2 apply to this paragraph's adjustment of patent term. That is, the day-to-day extension of patent term for pendency beyond the 3 year period is restricted as follows: 1) "B delay" cannot accrue for days of "A delay" that overlap, 2) the patent term cannot be extended beyond disclaimed term, and 3) the period of adjustment, including accrued "B delay," will be reduced for applicant delay.

Second, "if the issue of an original patent is delayed due to the failure of the United States Patent and Trademark Office to issue a patent within 3 years after the actual filing date of the application in the United States," meaning that the condition must first occur that the issuance of an original patent (35 U.S.C. 153), not merely the issuance of a notice of allowance, is delayed due to the Office's failure to issue a patent (sign and record a patent grant in the name of the United States), not merely mail a notice of allowance, within 3 years after the actual filing date of the application in the United States. This provision gives the Office a three-year period to issue a patent (sign and record a patent grant in the name of the United States) after the application filing date before an adjustment will accrue for "B delay."

Third, "not including- (i) any time consumed by continued examination of the application requested by the applicant under section 132(b); (ii) any time consumed by a proceeding under section 135(a), any time consumed by the imposition of an order under section 181, or any time consumed by appellate review by the Board of Patent Appeals and Interferences or by a Federal court; or (iii) any delay in the processing of the application by the United States Patent and Trademark Office requested by the applicant except as permitted by paragraph (3)(C), meaning that the three-year period does not include "any time consumed by" or "any delay in processing," as specified in clauses (i)-(iii). This language correlates to 35 U.S.C. 154(b)(1)(A) which likewise provides the basis for determining the period given the Office to take the specified actions before an adjustment will accrue for "A delay" (e.g., extended for 1 day after the day after the period specified in clauses (i)-(iv)).

Furthermore, these clauses are interpreted using their ordinary meanings. Nonetheless, the context of the legislation should be considered. As stated in Wyeth v. Dudas, 580 F.Supp.2d 138 (D.D.C., September 30, 2008), because the clock for calculating the 20-year patent term begins to run on the filing date, and not on the day the patent is actually granted, some of the effective term of a patent is consumed by the time it takes to prosecute the application. To mitigate this effect, the statute, inter alia, grants adjustments of patent term whenever the patent prosecution takes more than three years, regardless of the reason. The time consumed by prosecution of the application includes every day the application is pending before the Office from the actual filing date of the application in the United States until the date of issuance of the patent. The time it takes to prosecute the application ends not with the mailing of the notice of allowance, but with the issuance of the patent.

Thus, not including "any time consumed by" means not including any days used to prosecute the application as specified in clauses (i)-(ii)[3]. Clause (i) specifies "any time consumed by continued examination of the application requested by the applicant under section 132(b)." Clause (ii) specifies "any time consumed by a proceeding under section 135(a), any time consumed by the imposition of an order under section 181, or any time consumed by appellate review by the Board of Patent Appeals and Interferences or by a Federal court." "Time" in the context of this legislation throughout refers to days. "Consumed by" means used by or used in the course of. Websters Collegiate Dictionary, (11th ed.). The "any" signifies that the days consumed by are "any" of the days in the pendency of the application, and not just days that occur after the application has been pending for 3 years. As such, "any time consumed by" refers to any days used in the course of 1) continued examination of the application under section 132(b) (the filing of a request for continued examination), 2) interference proceedings, 3) secrecy orders, and 4) appellate review. Thus,

[3] Clause (iii) provides for not including (iii) any delay in the processing of the application by the United States Patent and Trademark Office requested by the applicant except as permitted by paragraph (3)(C), the term of the patent shall be extended 1 day for each day after the end of that 3-year period until the patent is issued. It is noted that paragraph (3)(C) allows with an adequate showing by applicant for reinstatement of no more than 3 months of the patent term reduced for applicant delay in taking in excess of three months to respond.

that 3-year period given to the Office to issue a patent before an adjustment will accrue for "B delay" does not include any days used in the course of or any time consumed by clauses (i)-(ii), including any time consumed by the filing of a request for continued examination.

Fourth, "the term of the patent shall be extended 1 day for each day after the end of that 3-year period until the patent is issued" meaning that the consequence of this failure is that after "the end of that 3-year period" an additional 1 day of patent term will accrue for each day that the application is pending until the day the patent is issued.

The "time consumed by" or used in the course of the continued examination of the application requested by the applicant under section 132(b) does not end until issuance of the patent. 35 U.S.C. 132(b) was enacted under the same title, the "American Inventors Protection Act of 1999," as 35 U.S.C. 154(b). Section 4403 of the AIPA amended 35 U.S.C. § 132 to provide, at the request of the applicant, for continued examination of an application for a fee (request for continued examination or RCE practice), without requiring the applicant to file a continuing application under 37 CFR 1.53(b) or a continued prosecution application (CPA) under 37 CFR 1.53(d). Thus, clause (i) is different from clause (ii) in that clause (i) refers to an examination process whereas clause (ii) refers to time consumed by proceedings (interferences, secrecy orders and appeals) in an application.

By nature, the time used in the course of the examination process continues to issuance of the patent. The examination process involves examining the application to ascertain whether it appears that the applicant is entitled to a patent under the law. See 35 U.S.C. 131 ("[t]he Director shall cause an examination to be made of the application and the alleged new invention; and if on such examination it appears that the applicant is entitled to a patent under the law, the Director shall issue a patent therefor"). If on examination it appears that the applicant is entitled to a patent, the USPTO issues a notice of allowance. See 35 U.S.C. 151 ("[i]f it appears that applicant is entitled to a patent under the law, a written notice of allowance of the application shall be given or mailed to the applicant"). If on examination it appears that the applicant is not entitled to a patent, the USPTO issues a notice (an Office action) stating the applicable rejection, objection, or other requirement, with the reasons therefor. See 35 U.S.C. 132 ("[w]henever, on examination, any claim for a patent is

rejected, or any objection or requirement made, the Director shall notify the applicant thereof, stating the reasons for such rejection, or objection or requirement, together with such information and references as may be useful in judging of the propriety of continuing the prosecution of his application"). Neither the issuance of a notice of allowance nor the insurance of an Office action terminates the examination process. If after the issuance of an Office action under 35 U.S.C. 132 it subsequently appears that the applicant is entitled to a patent (e.g., in response to an argument or amendment by the applicant), the USPTO will issue a notice of allowance. Conversely, if after the issuance of a notice of allowance under 35 U.S.C. 151 it subsequently appears that the applicant is not entitled to a patent (e.g., in response to information provided by the applicant or uncovered by the USPTO), the USPTO will withdraw the application from issuance and issue an Office action under 35 U.S.C. 132 stating the applicable rejection, objection, or other requirement, with the reasons therefor.

As held in Blacklight Power, the USPTO's responsibility to issue a patent containing only patentable claims does not end with the issuance of a notice of allowance under 35 U.S.C. 151. See BlackLight Power, Inc. v. Rogan, 295 F.3d 1269, 1273 (Fed. Cir. 2002). Rather, if there is any substantial, reasonable ground within the knowledge or cognizance of the Director as to why an application should not issue, it is the USPTO's duty to refuse to issue the patent even if a notice of allowance has previously been issued for the application. See In re Drawbaugh, 9 App. D.C. 219, 240 (D.C. Cir 1896).

Moreover, the applicant continues to be engaged in the examination process after the mailing of the notice of allowance. 37 CFR 1.56 makes clear that the applicant has a duty to disclose information material to patentability as long as the application is pending before the USPTO (i.e., until a patent is granted or the application is abandoned). See 37 CFR 1.56(a) ("[t]he duty to disclose information exists with respect to each pending claim until the claim is cancelled or withdrawn from consideration, or the application becomes abandoned"). 37 CFR 1.97 and 1.98 provide for the consideration of information submitted by the applicant after a notice of allowance has been mailed. See 37 CFR 1.97(d). In addition, 37 CFR 1.312 provides for the amendment of an application after a notice of allowance has been mailed. In fact, the request for examination

procedures[4] permit the filing of a request for continued examination under 37 CFR 1.114 even after the issuance of a notice of allowance under 35 U.S.C. 151. See 37 CFR 1.114(a)(1).

As the examination process does not terminate with the mailing of the notice of allowance, the time consumed by continued examination requested by the applicant under section 132(b) does not terminate with the mailing of the notice of allowance. All the time the application is pending from the date of filing of the request for continued examination to the mailing of the notice of allowance through issuance of the patent is a consequence of the filing of the request for continued examination. Further action by the Office is pursuant to that request. Applicant has gotten further prosecution of the application without having to file a continuing application under 37 CFR 1.53(b).

All of the continued examination pursuant to the filing of the request by the applicant is properly excluded from the delay attributed to the Office. 35 U.S.C. 154(b)(1)(B)'s guarantee of a total application pendency of no more than three years provides for adjustment of the patent term for delay due to the Office's failure to issue the patent within three years, but does not include "any time consumed by continued examination requested by the applicant under 35 U.S.C. 132(b)." It is not necessary to mitigate the effect on the 20-year term to the extent that applicant has requested that the Office continue to examine the application via a request for continued examination, in lieu of, the filing of a continuing application under 37 CFR 1.53(b).

In this instance, a request for continued examination was filed on April 23, 2007, and the patent issued by virtue of that request on April 12, 2011. Pursuant to 35 U.S.C. 154(b)(1)(B)(i), the period beginning on December 7, 2010 and ending on April 12, 2011 is not included in calculating Office delay.

CONCLUSION

In light thereof, the correct patent term adjustment is 272 days, which is 520 days of delay under 35 U.S.C. 154(b)(1)(A)+

---

[4] Thus, on occasion, even where a request for continued examination has already been filed and a notice of allowance issued pursuant to that request, applicant may file a further request for continued examination.

183 days of B delay reduced by 431 (89 + 17 + 90 + 31 + 61 + 31 + 20 + 92) days of Applicant delay.

The Office will *sua sponte* issue a certificate of correction. Pursuant to 37 CFR 1.322, the Office will not issue a certificate of correction without first providing assignee or patentee an opportunity to be heard. Accordingly, Patentees are given **one (1) month or thirty (30) days**, whichever is longer, from the mail date of this decision to respond. No extensions of time will be granted under 37 CFR § 1.136.

The application is being forwarded to the Certificates of Correction Branch for issuance of a certificate of correction. The Office will issue a certificate of correction indicating that the term of the above-identified patent is extended or adjusted by **two hundred seventy-two (272)** days.

Telephone inquiries should be directed to the undersigned at (571) 272-3230.

Shirene Willis Brantley

Shirene Willis Brantley
Senior Petitions Attorney
Office of Petitions

Enclosure: Copy of DRAFT Certificate of Correction

UNITED STATES PATENT AND TRADEMARK OFFICE

CERTIFICATE OF CORRECTION

PATENT : 7,925,610 B2

DATED : **April 12, 2011** **DRAFT**

INVENTOR(S) : Elbaz et al.

It is certified that error appears in the above-identified patent and that said Letters Patent is hereby corrected as shown below:

On the cover page,

[*] Notice: Subject to any disclaimer, the term of this patent is extended or adjusted under 35 U.S.C. 154(b) by 292 days

Delete the phrase "by 292 days" and insert – by 272 days--

UNITED STATES PATENT AND TRADEMARK OFFICE

Commissioner for Patents
United States Patent and Trademark Office
P.O. Box 1450
Alexandria, VA 22313-1450
www.uspto.gov

MAILED
SEP 13 2011
OFFICE OF PETITIONS

FISH & RICHARDSON P.C.
PO BOX 1022
MINNEAPOLIS MN 55440-1022

In re Patent of Elbaz et al.	:	FINAL AGENCY DECISION
Patent No. 7,925,610	:	ON
Issue Date: April 12, 2011	:	REQUEST FOR RECONSIDERATION
Application No. 10/690,328	:	OF
Filed: October 21, 2003	:	DECISION ON APPLICATION
Attorney Docket No. 16113-0328001	:	FOR
For: DETERMINING A MEANING OF A KNOWLEDGE ITEM USING DOCUMENT-BASED INFORMATION	:	PATENT TERM ADJUSTMENT

This is a decision on the "RESPONSE TO DECISION ON REQUEST FOR RECONSIDERATION OF PATENT TERM ADJUSTMENT AND NOTICE OF INTENT TO ISSUE CERTIFICATE OF CORRECTION," filed August 18, 2011, requesting reconsideration of the decision of July 18, 2011, and requesting that the patent term adjustment determination under 35 U.S.C. § 154(b) in the decision of July 18, 2011, be changed from 272 days to 399 days.

Patentees request that the decision on this renewed request for reconsideration of patent term adjustment be deferred or delayed until a final decision has been rendered in Abbott Biotherapeutics Corp. v. Kappos. There is no specific regulatory provision for requesting that a petition under 37 CFR 1.705(d) be held in abeyance.

The request for reconsideration of the decision of July 18, 2011, is granted to the extent that the decision of July 18, 2011, has been reconsidered; however, the request for reconsideration is **DENIED** with respect to making any change in the patent adjustment determination under 35 U.S.C. § 154(b) of 272 days indicated in the decision of July 18, 2011. This decision may be viewed as a final agency action within the

meaning of 5 U.S.C. § 704 and for purposes of seeking judicial review. *See* MPEP 1002.02.

BACKGROUND

On April 12, 2011, the above-identified application matured into U.S. Patent No. 7,925,610, with a revised patent term adjustment of 292 days. On June 13, 2011, patentees timely submitted a petition for reconsideration of patent term adjustment (with required fee), asserting that the correct number of days of Patent Term Adjustment is 399 days. On July 18, 2011, the Office mailed a decision indicating the patent term adjustment is 272 days and affording patentees with a 30 day/1 month period to contest the decision. Patentees timely filed the present petition on August 18, 2011. Patentees maintain that the Office incorrectly calculated Office delay pursuant to 37 CFR 1.702(b). Patentees contend that the Office erred in subtracting from the "B delay" a period of time that was not "consumed by continued examination of the application." Specifically, Patentees argue that (after the filing of the request for continued examination) the Office mailed a Notice of Allowance on December 7, 2010, thereby closing examination of the application on that date. Thus, Patentees argue no continued examination took place during the 127 day period from December 7, 2010 (the mailing date of the Notice of Allowance) until April 12, 2011 (the date the patent was issued). As such, Patentee maintains that the "B delay" should include the 127 days and be increased from 183 to 310 days. Patentees conclude that the correct patent term adjustment is 399 days (the sum of 520 days of "A delay" and 310 days of "B delay" minus 431 days of Applicant delay).

RELEVANT STATUTE AND REGULATIONS

The statutory basis for calculation of "B delay" is 35 U.S.C. 154(b)(1)(B) GUARANTEE OF NO MORE THAN 3-YEAR APPLICATION PENDENCY, which provides that:

Subject to the limitations under paragraph (2), if the issue of an original patent is delayed due to the failure of the United States Patent and Trademark Office to issue a patent within 3 years after the actual filing date of the application in the United States, not including —

(i) any time consumed by continued examination of the application requested by the applicant under section 132(b);

(ii) any time consumed by a proceeding under section 135(a), any time consumed by the imposition of an order under section 181, or any time consumed by appellate review by the Board of Patent Appeals and Interferences or by a Federal court; or

(iii) any delay in the processing of the application by the United States Patent and Trademark Office requested by the applicant except as permitted by paragraph (3)(C), the term of the patent shall be extended 1 day for each day after the end of that 3-year period until the patent is issued.

The implementing regulation, 37 CFR 1.702(b) provides that:

Subject to the provisions of 35 U.S.C. 154(b) and this subpart, the term of an original patent shall be adjusted if the issuance of the patent was delayed due to the failure of the Office to issue a patent within three years after the date on which the application was filed under 35 U.S.C. 111(a) or the national stage commenced under 35 U.S.C. 371(b) or (f) in an international application, but not including:

(1) Any time consumed by continued examination of the application under 35 U.S.C. 132(b);

(2) Any time consumed by an interference proceeding under 35 U.S.C. 135(a);

(3) Any time consumed by the imposition of a secrecy order under 35 U.S.C. 181;

(4) Any time consumed by review by the Board of Patent Appeals and Interferences or a Federal court; or

(5) Any delay in the processing of the application by the Office that was requested by the applicant.

OPINION

Patentees' arguments have been considered, but not found persuasive. The Office calculated the period of "B delay" pursuant to 35 U.S.C. 154(b)(1)(B)(i) and 37 CFR 1.702(b)(1) as 183 days based on the application having been filed under 35 U.S.C. 111(a) on October 21, 2003 and the patent not having issued as of the day after the three year date, October 22, 2006, and a request for continued examination under 132(b) having been filed on April 23, 2007. In other words, the 127-day period beginning on the date of mailing of the notice of allowance to the date of issuance of the patent was considered time consumed by continued examination of an application under 35 U.S.C. 132(b) and was not included in the "B delay."

The Office's calculation of "B delay" is correct. The "B delay" is an adjustment entered if the issuance of the patent was delayed due to the failure of the Office to issue a patent within three years after the date on which the application was filed. However, the adjustment does not include, among other things, any time consumed by continued examination of the application at the request of the applicant under 35 U.S.C. 132(b)[1]. So, with respect to calculating the "B delay" where applicant has filed a request for continued examination, the period of adjustment is the number of days, if any, in the period beginning on the day after the date that is three years after the date on which the application was filed under 35 U.S.C. 111(a) or the national stage commenced under 35 U.S.C. 371(b) or (f) in an international application and ending on the date a patent was issued, but not including the number of days in the period beginning on the date on which a request for continued examination of the application under 35 U.S.C. 132(b) was filed and ending on the date the patent was issued.

Further, counting the period of time excluded from the "B delay" for the filing of a request for continued examination under 35 U.S.C. 132(b), from the date on which the request for continued examination is filed to the date the patent is issued is proper. Patentee does not dispute that time consumed by continued examination of an application under 35 U.S.C. 132(b) is properly excluded and that the calculation of the excluded period begins on the date of filing of the request for continued examination. At issue is what further processing or examination beyond the date of filing of the request for continued examination is not any time consumed by continued examination of the application under 35 U.S.C. 132(b). The USPTO indicated in September of 2000 in the final rule to implement the patent term adjustment provisions of the AIPA that once a request for continued examination under 35 U.S.C. 132(b) and 37 CFR 1.114 is filed in

---

[1] Pursuant to 35 U.S.C. 132(b) , 37 CFR 1.114 provides for continued examination of an application, as follows:

(a) If prosecution in an application is closed, an applicant may request continued examination of the application by filing a submission and the fee set forth in § 1.17(e) prior to the earliest of:

(1) Payment of the issue fee, unless a petition under § 1.313 is granted;

(2) Abandonment of the application; or

(3) The filing of a notice of appeal to the U.S. Court of Appeals for the Federal Circuit under 35 U.S.C. 141, or the commencement of a civil action under 35 U.S.C. 145 or 146, unless the appeal or civil action is terminated.

(b) Prosecution in an application is closed as used in this section means that the application is under appeal, or that the last Office action is a final action (§ 1.113), a notice of allowance (§ 1.311), or an action that otherwise closes prosecution in the application.

an application, any further processing or examination of the application, including granting of a patent, is by virtue of the continued examination given to the application under 35 U.S.C. 132(b) and CFR 1.114. See Changes to Implement Patent Term Adjustment under Twenty-Year Patent Term, 65 Fed. Reg. 56366, 56376 (Sept. 18, 2000) (response to comment 8). Thus, the excluded period begins with the filing of the request for continued examination and ends with the issuance of the patent.

Patentees' argument that the period of time after the issuance of a notice of allowance on a request for continued examination is not "any time consumed by continued examination requested by the applicant under section 132(b)" within the meaning of 35 U.S.C. 154(b)(1)(B)(i) is not availing. This limitation is not supported by the statutory language. Garcia v. United States, 469 U.S. 70, 75 (1984) ("only the most extraordinary showing of contrary intentions from [legislative history] would justify a limitation on the 'plain meaning' of the statutory language"). BP Am. Prod. Co. v. Burton, 549 U.S. 84, 91 (2006) ("Unless otherwise defined, statutory terms are generally interpreted in accordance with their ordinary meaning"). The statute provides for a guarantee of no more than 3-year application pendency, by providing for an adjustment in the patent term.

First, "Subject to the limitations of paragraph (2)," means that the limitations of paragraph 2 apply to this paragraph's adjustment of patent term. That is, the day-to-day extension of patent term for pendency beyond the 3 year period is restricted as follows: 1) "B delay" cannot accrue for days of "A delay" that overlap, 2) the patent term cannot be extended beyond disclaimed term, and 3) the period of adjustment, including accrued "B delay," will be reduced for applicant delay.

Second, "if the issue of an original patent is delayed due to the failure of the United States Patent and Trademark Office to issue a patent within 3 years after the actual filing date of the application in the United States," meaning that the condition must first occur that the issuance of an original patent (35 U.S.C. 153), not merely the issuance of a notice of allowance, is delayed due to the Office's failure to issue a patent (sign and record a patent grant in the name of the United States), not merely mail a notice of allowance, within 3 years after the actual filing date of the application in the United States. This provision gives the Office a three-year period to issue a patent (sign and record a patent grant in the name of the United States) after the application filing date before an adjustment will accrue for "B delay."

Third, "not including- (i) any time consumed by continued examination of the application requested by the applicant under section 132(b); (ii) any time consumed by a proceeding under section 135(a), any time consumed by the imposition of an order under section 181, or any time consumed by appellate review by the Board of Patent Appeals and Interferences or by a Federal court; or (iii) any delay in the processing of the application by the United States Patent and Trademark Office requested by the applicant except as permitted by paragraph (3)(C), meaning that the three-year period does not include "any time consumed by" or "any delay in processing," as specified in clauses (i)-(iii). This language correlates to 35 U.S.C. 154(b)(1)(A) which likewise provides the basis for determining the period given the Office to take the specified actions before an adjustment will accrue for "A delay" (e.g., extended for 1 day after the day after the period specified in clauses (i)-(iv)).

Furthermore, these clauses are interpreted using their ordinary meanings. Nonetheless, the context of the legislation should be considered. As stated in Wyeth v. Dudas, 580 F.Supp.2d 138 (D.D.C., September 30, 2008), because the clock for calculating the 20-year patent term begins to run on the filing date, and not on the day the patent is actually granted, some of the effective term of a patent is consumed by the time it takes to prosecute the application. To mitigate this effect, the statute, *inter alia*, grants adjustments of patent term whenever the patent prosecution takes more than three years, regardless of the reason. The time consumed by prosecution of the application includes every day the application is pending before the Office from the actual filing date of the application in the United States until the date of issuance of the patent. The time it takes to prosecute the application ends not with the mailing of the notice of allowance, but with the issuance of the patent.

Thus, not including "any time consumed by" means not including any days used to prosecute the application as specified in clauses (i)-(ii)[2]. Clause (i) specifies "any time consumed by continued examination of the application requested by the

[2] Clause (iii) provides for not including (iii) any delay in the processing of the application by the United States Patent and Trademark Office requested by the applicant except as permitted by paragraph (3)(C), the term of the patent shall be extended 1 day for each day after the end of that 3-year period until the patent is issued. It is noted that paragraph (3)(C) allows with an adequate showing by applicant for reinstatement of no more than 3 months of the patent term reduced for applicant delay in taking in excess of three months to respond.

applicant under section 132(b)." Clause (ii) specifies "any time consumed by a proceeding under section 135(a), any time consumed by the imposition of an order under section 181, or any time consumed by appellate review by the Board of Patent Appeals and Interferences or by a Federal court." "Time" in the context of this legislation throughout refers to days. "Consumed by" means used by or used in the course of. *Websters Collegiate Dictionary*, (11th ed.). The "any" signifies that the days consumed by are "any" of the days in the pendency of the application, and not just days that occur after the application has been pending for 3 years. As such, "any time consumed by" refers to any days used in the course of 1) continued examination of the application under section 132(b)(the filing of a request for continued examination), 2) interference proceedings, 3) secrecy orders, and 4) appellate review. Thus, that 3-year period given to the Office to issue a patent before an adjustment will accrue for "B delay" does not include any days used in the course of or any time consumed by clauses (i)-(ii), including any time consumed by the filing of a request for continued examination.

Fourth, "the term of the patent shall be extended 1 day for each day after the end of that 3-year period until the patent is issued" meaning that the consequence of this failure is that after "the end of that 3-year period" an additional 1 day of patent term will accrue for each day that the application is pending until the day the patent is issued.

The "time consumed by" or used in the course of the continued examination of the application requested by the applicant under section 132(b) does not end until issuance of the patent. 35 U.S.C. 132(b) was enacted under the same title, the "American Inventors Protection Act of 1999," as 35 U.S.C. 154(b). Section 4403 of the AIPA amended 35 U.S.C. § 132 to provide, at the request of the applicant, for continued examination of an application for a fee (request for continued examination or RCE practice), without requiring the applicant to file a continuing application under 37 CFR 1.53(b) or a continued prosecution application (CPA) under 37 CFR 1.53(d). Thus, clause (i) is different from clause (ii) in that clause (i) refers to an examination process whereas clause (ii) refers to time consumed by proceedings (interferences, secrecy orders and appeals) in an application.

By nature, the time used in the course of the examination process continues to issuance of the patent. The examination process involves examining the application to ascertain whether

it appears that the applicant is entitled to a patent under the law. See 35 U.S.C. 131 ("[t]he Director shall cause an examination to be made of the application and the alleged new invention; and if on such examination it appears that the applicant is entitled to a patent under the law, the Director shall issue a patent therefor"). If on examination it appears that the applicant is entitled to a patent, the USPTO issues a notice of allowance. See 35 U.S.C. 151 ("[i]f it appears that applicant is entitled to a patent under the law, a written notice of allowance of the application shall be given or mailed to the applicant"). If on examination it appears that the applicant is not entitled to a patent, the USPTO issues a notice (an Office action) stating the applicable rejection, objection, or other requirement, with the reasons therefor. See 35 U.S.C. 132 ("[w]henever, on examination, any claim for a patent is rejected, or any objection or requirement made, the Director shall notify the applicant thereof, stating the reasons for such rejection, or objection or requirement, together with such information and references as may be useful in judging of the propriety of continuing the prosecution of his application"). Neither the issuance of a notice of allowance nor the insurance of an Office action terminates the examination process. If after the issuance of an Office action under 35 U.S.C. 132 it subsequently appears that the applicant is entitled to a patent (e.g., in response to an argument or amendment by the applicant), the USPTO will issue a notice of allowance. Conversely, if after the issuance of a notice of allowance under 35 U.S.C. 151 it subsequently appears that the applicant is not entitled to a patent (e.g., in response to information provided by the applicant or uncovered by the USPTO), the USPTO will withdraw the application from issuance and issue an Office action under 35 U.S.C. 132 stating the applicable rejection, objection, or other requirement, with the reasons therefor.

As held in Blacklight Power, the USPTO's responsibility to issue a patent containing only patentable claims does not end with the issuance of a notice of allowance under 35 U.S.C. 151. See BlackLight Power, Inc. v. Rogan, 295 F.3d 1269, 1273 (Fed. Cir. 2002). Rather, if there is any substantial, reasonable ground within the knowledge or cognizance of the Director as to why an application should not issue, it is the USPTO's duty to refuse to issue the patent even if a notice of allowance has previously been issued for the application. See In re Drawbaugh, 9 App. D.C. 219, 240 (D.C. Cir 1896).

Moreover, the applicant continues to be engaged in the examination process after the mailing of the notice of

allowance. 37 CFR 1.56 makes clear that the applicant has a duty to disclose information material to patentability as long as the application is pending before the USPTO (i.e., until a patent is granted or the application is abandoned). See 37 CFR 1.56(a) ("[t]he duty to disclose information exists with respect to each pending claim until the claim is cancelled or withdrawn from consideration, or the application becomes abandoned"). 37 CFR 1.97 and 1.98 provide for the consideration of information submitted by the applicant after a notice of allowance has been mailed. See 37 CFR 1.97(d). In addition, 37 CFR 1.312 provides for the amendment of an application after a notice of allowance has been mailed. In fact, the request for examination procedures[3] permit the filing of a request for continued examination under 37 CFR 1.114 even after the issuance of a notice of allowance under 35 U.S.C. 151. See 37 CFR 1.114(a)(1).

As the examination process does not terminate with the mailing of the notice of allowance, the time consumed by continued examination requested by the applicant under section 132(b) does not terminate with the mailing of the notice of allowance. All the time the application is pending from the date of filing of the request for continued examination to the mailing of the notice of allowance through issuance of the patent is a consequence of the filing of the request for continued examination. Further action by the Office is pursuant to that request. Applicant has gotten further prosecution of the application without having to file a continuing application under 37 CFR 1.53(b).

All of the continued examination pursuant to the filing of the request by the applicant is properly excluded from the delay attributed to the Office. 35 U.S.C. 154(b)(1)(B)'s guarantee of a total application pendency of no more than three years provides for adjustment of the patent term for delay due to the Office's failure to issue the patent within three years, but does not include "any time consumed by continued examination requested by the applicant under 35 U.S.C. 132(b)." It is not necessary to mitigate the effect on the 20-year term to the extent that applicant has requested that the Office continue to examine the application via a request for continued examination, in lieu of, the filing of a continuing application under 37 CFR 1.53(b).

---

[3] Thus, on occasion, even where a request for continued examination has already been filed and a notice of allowance issued pursuant to that request, applicant may file a further request for continued examination.

In this instance, a request for continued examination was filed on April 23, 2007, and the patent issued by virtue of that request on April 12, 2011. Pursuant to 35 U.S.C. 154(b)(1)(B)(i), the period beginning on December 7, 2010 and ending on April 12, 2011 is not included in calculating Office delay.

CONCLUSION

Accordingly, the decision on application for patent term adjustment has been reconsidered and the request for additional patent term is **DENIED**.

The patent term adjustment remains 272 days, as indicated in the decision of July18, 2011. The application is being forwarded to the Certificates of Branch for issuance of a certificate of correction. The Office will issue a certificate of correction indicating that the term of the above-identified patent is extended or adjusted **by two hundred seventy-two (272)** days.

Deposit account no. 06-1050 will be refunded the $200.00 petition fee submitted with the instant petition, as Patentees previously paid the $200.00 petition fee on June 13, 2011.

Telephone inquiries specific to this matter should be directed to Shirene Willis Brantley, Senior Petitions Attorney, at (571) 272-3230.

Anthony Knight
Director, Office of Petitions

UNITED STATES PATENT AND TRADEMARK OFFICE

Commissioner for Patents
United States Patent and Trademark Office
P.O. Box 1450
Alexandria, VA 22313-1450
www.uspto.gov

FISH & RICHARDSON P.C.
PO BOX 1022
MINNEAPOLIS MN 55440-1022

MAILED
DEC 07 2011
OFFICE OF PETITIONS

In re Patent of Elbaz et al.	:	
Patent No. 7,925,610	:	
Issue Date: April 12, 2011	:	
Application No. 10/690,328	:	FINAL AGENCY DECISION
Filed: October 21, 2003	:	ON REQUEST TO INVOKE THE
Attorney Docket No. 16113-	:	SUPERVISORY AUTHORITY
0328001	:	OF THE DIRECTOR
For: DETERMINING A MEANING OF A	:	
KNOWLEDGE ITEM USING DOCUMENT-	:	
BASED INFORMATION	:	

This is a decision on the petition captioned," PETITION UNDER 37 C.F.R. §1.181(a)(3) TO INVOKE THE SUPERVISORY AUTHORITY OF THE DIRECTOR," filed Monday, November 14, 2011, requesting that the Director review the Final Agency Decision on Request for Reconsideration of Decision on Application for Patent Term Adjustment ("Decision") mailed by the Office of Petitions on September 13, 2011.

The Decision maintains that the above-identified patent is entitled to two hundred seventy-two (272) days of patent term adjustment ("PTA"). Patentees request that the Director review the decision and modify the PTA calculation to three hundred ninety-nine (399) days.

The decision of the Director of the Office of Petitions has been reviewed. However, because no error has been found in the decision, the petition under 37 CFR § 1.181 is **DENIED**.

The patent term adjustment remains 272 days, as indicated in the final agency action of September 13, 2011. The patent is being referred to the Certificates of Correction Branch for issuance of a certificate of correction. The Office will issue a

certificate of correction indicating that the term of the above-identified patent is extended or adjusted **by two hundred seventy-two (272)** days.

Andrew Hirshfeld
Associate Commissioner for Patent Examination Policy

SPE RESPONSE FOR CERTIFICATE OF CORRECTION

Paper No.:20100825

DATE : August 25, 2010

TO SPE OF : ART UNIT 3641

SUBJECT : Request for Certificate of Correction on Patent No.: 7,077,216

A response is requested with respect to the accompanying request for a certificate of correction.

Please complete this form and return with file, within **7** days to:
Certificates of Correction Branch - ST (South Tower) 9A22
Palm location **7590** - Tel. No. (703) 305-8309

With respect to the change(s) requested, correcting Office and/or Applicant's errors, should the patent read as shown in the certificate of correction? No new matter should be introduced, nor should the scope or meaning of the claims be changed.

Thank You For Your Assistance **Certificates of Correction Branch**

The request for issuing the above-identified correction(s) is hereby:

Note your decision on the appropriated box.

☒ **Approved** All changes apply.

☐ **Approved in Part** Specify below which changes **do not** apply.

☐ **Denied** State the reasons for denial below.

Comments:

/Michael J. Carone/
Michael Carone, SPE 3641

UNITED STATES PATENT AND TRADEMARK OFFICE

Commissioner for Patents
United States Patent and Trademark Office
P.O. Box 1450
Alexandria, VA 22313-1450
www.uspto.gov

DORSEY & WHITNEY LLP - NEW YORK
ATTENTION: INTELLECTUAL PROPERTY - PATENT DOCKET
51 WEST 52ND STREET
NEW YORK NY 10019-6119

MAILED
OCT 20 2011
OFFICE OF PETITIONS

In re Patent No. 7,214,243	:	
Issue Date: May 8, 2007	:	
Application No. 10/690,430	:	ON PETITION
Filed: October 21, 2003	:	
Attorney Docket No. 104558-200	:	

This is a decision on the petition under 37 CFR 1.378(c), filed October 7, 2011 to accept the unintentionally delayed payment of a maintenance fee for the above-identified patent.

The petition is **DISMISSED**.

If reconsideration of this decision is desired, a petition for reconsideration under 37 CFR 1.378(e) must be filed within TWO (2) MONTHS from the mail date of this decision. No extension of this two-month time limit can be granted under 37 CFR 1.136(a) or (b). This is **not** a final agency action within the meaning of 5 U.S.C. § 704.

Any petition for reconsideration of this decision must be accompanied by the petition fee of $400 as set forth in 37 CFR 1.17(f). The petition for reconsideration must include the lacking item(s) noted above, since, after a decision on the petition for reconsideration, no further reconsideration or review of the matter will be undertaken by the Commissioner.

A petition to accept the unintentionally delayed payment of a maintenance fee under 35 U.S.C. § 41(c) and 37 CFR 1.378(c) must be accompanied by: (1) a statement that the delay was unintentional; (2) payment of the appropriate maintenance fee, unless previously submitted; (3) payment of the surcharge set forth in 37 CFR 1.20(i)(2). This petition lacks item (1) above.

As to item (1) the statement of unintentional delay is presently not acceptable since the petition was not properly signed. The signature provided on the petition is not recognized by the U.S. Patent and Trademark Office, as a person of interest in this case. The signature of Timothy J. Gatulis, has not been authorized to act on behalf of the assignee in this patent. The signature on the Statement under 37 CFR 3.73(b) is that of Brett A. Taylor, which authorizes only Brett A. Taylor to act on behalf of the assignee 3HBFM, LLC. If the filing of a renewed petition is desired, then the signatures on the petition and the "Statement" must be the same.

The application file does not indicate a change of address has been filed in this case, although the address given on the petition differs from the address of record. A change of address should be filed in this case in accordance with MPEP 601.03. A courtesy copy of this decision is being mailed to the address noted on the petition. However, until otherwise instructed, all future correspondence regarding this application will be mailed solely to the address of record.

Further correspondence with respect to this matter should be addressed as follows:

By Mail: Mail Stop PETITION
Commissioner for Patents
Post Office Box 1450
Alexandria, VA 22313-1450

By hand: U. S. Patent and Trademark Office
Customer Service Window, Mail Stop Petitions
Randolph Building
401 Dulany Street
Alexandria, VA 22314

The centralized facsimile number is **(571) 273-8300.**

Telephone inquiries should be directed to the Kimberly Inabinet at (571) 272-4618.

/Kimberly Inabinet/

Kimberly Inabinet
Petitions Examiner
Office of Petitions

cc: Timothy J. Gatulis
3906 Creekway Trail
Dayton, OH 45440

UNITED STATES PATENT AND TRADEMARK OFFICE

Commissioner for Patents
United States Patent and Trademark Office
P.O. Box 1450
Alexandria, VA 22313-1450
www.uspto.gov

DORSEY & WHITNEY LLP - NEW YORK
ATTENTION: INTELLECTUAL PROPERTY - PATENT DOCKET
51 WEST 52ND STREET
NEW YORK NY 10019-6119

MAILED

DEC 01 2011

OFFICE OF PETITIONS

ON PETITION

In re Patent No. 7,214,243 :
Issue Date: May 8, 2007 :
Application No. 10/690,430 :
Filed: October 21, 2003 :
Attorney Docket No. 104558-200 :

This is a decision on the renewed petition under 37 CFR 1.378(c), filed October 26, 2011 to accept the unintentionally delayed payment of a maintenance fee for the above-identified patent.

The petition is **GRANTED**.

This patent expired on May 9, 2011, for failure to pay the three and one-half year maintenance fee. Since this petition was submitted within twenty-four months after the six-month grace period provided in 37 CFR 1.362(e), the petition was timely filed under the provisions of 37 CFR 1.378(c).

The maintenance fee is hereby accepted and the above-identified patent is reinstated as of the mail date of this decision.

The petition fee for a petition under 37 CFR 1.378(c) is $1,640. A fee of $930 was paid on October 7, 2011. The remaining balance of $710.00 will be charged to petitioner's deposit account. There was an oversight of this deficiency in the previous decision mailed on October 20, 2011.

The current maintenance fee of $565.00 will also be charged to petitioner's deposit account. This fee was not paid as authorized with the petition filed on October 20, 2011.

Telephone inquiries concerning this decision should be directed to Kimberly Inabinet at (571) 272-4618.

The patent file is being forwarded to Files Repository.

/Kimberly Inabinet/

Kimberly Inabinet
Petitions Examiner
Office of Petitions

UNITED STATES PATENT AND TRADEMARK OFFICE

Commissioner for Patents
United States Patent and Trademark Office
P.O. Box 1450
Alexandria, VA 22313-1450
www.uspto.gov

Harvard University & Medical School
c/o Wolf, Greenfield & Sacks, P.C.
600 Atlantic Avenue
Boston MA 02210-2206

MAILED
MAR 14 2011
OFFICE OF PETITIONS

In re Application of	:	
Jeon et al.	:	
Application No. 10/690475	:	
Filing or 371(c) Date: 10/21/2003	:	ON PETITION
Pat. Num.: 6883559	:	
Issue Date: 04/26/2005	:	
Attorney Docket Number: 80647	:	

This is a notice regarding request for acceptance of a fee deficiency submission under 37 CFR 1.28. On September 1, 1998, the Court of Appeals for the Federal Circuit held that 37 CFR 1.28(c) is the sole provision governing the time for correction of the erroneous payment of the issue fee as a small entity. **See DH Technology v. Synergystex International, Inc. 154 F.3d 1333, 47 USPQ2d 1865 (Fed. Cir. Sept. 1, 1998).**

The Office no longer investigates or rejects original or reissue applications under 37 CFR 1.56. **1098 Off. Gaz. Pat. Office 502 (January 3, 1989).** Therefore, nothing in this Notice is intended to imply that an investigation was done.

Your fee deficiency submission under 37 CFR 1.28 is hereby **ACCEPTED**.

This application is no longer entitled to small entity status. Accordingly, all future fees paid in this application must be paid at the large entity rate.

Telephone inquiries concerning this matter should be directed to the undersigned at (571) 272-3232.

/DLW/

Derek L. Woods
Attorney
Office of Petitions

SPE RESPONSE FOR CERTIFICATE OF CORRECTION

DATE : 11/2/10 **Paper No.:** ——

TO SPE OF : ART UNIT 3767

SUBJECT : Request for Certificate of Correction for Appl. No.: 10/690685 Patent No.: 7393341 B2

Please respond to this request for a certificate of correction within 7 days.

FOR IFW FILES:

Please review the requested changes/corrections as shown in the **COCIN** document(s) in the IFW application image. No new matter should be introduced, nor should the scope or meaning of the claims be changed.

Please complete the response (see below) and forward the completed response to scanning using document code **COCX**.

FOR PAPER FILES:

Please review the requested changes/corrections as shown in the attached certificate of correction. Please complete this form (see below) and forward it with the file to:

Certificates of Correction Branch (CofC)
Randolph Square – 9D10-A
Palm Location 7580

Virginia Tolbert
Certificates of Correction Branch
571-272-0460

Thank You For Your Assistance

The request for issuing the above-identified correction(s) is hereby:
Note your decision on the appropriate box.

- [X] **Approved** — **All** changes apply.
- [ ] **Approved in Part** — Specify below which changes **do not** apply.
- [ ] **Denied** — State the reasons for denial below.

Comments: The request for Certificate of Correction is approved, as Applicant is now fully in compliance by having filed all the foreign priority documents.

/Laura Schell/ 9/6/2011

SPE RESPONSE FOR CERTIFICATE OF CORRECTION

Paper No.: _____

DATE : 09/27/10

TO SPE OF : ART UNIT 1792

SUBJECT : Request for Certificate of Correction for Appl. N 10690688.-Pt.7691201

Please respond to this request for a certificate of correction within 7 days.

FOR IFW FILES:

Please review the requested changes/corrections as shown in the **COCIN** document(s) in the IFW application image. No new matter should be introduced, nor should the scope or meaning of the claims be changed.

Please complete the response (see below) and forward the completed response to scanning using document code **COCX**.

FOR PAPER FILES:

Please review the requested changes/corrections as shown in the attached certificate of correction. Please complete this form (see below) and forward it with the file to:

Certificates of Correction Branch (CofC)

Magdalene Talley
Certificates of Correction Branch
571 272-0423

Thank You For Your Assistance

The request for issuing the above-identified correction(s) is hereby:

Note your decision on the appropriate box.

- ☑ **Approved** — **All** changes apply.
- ☐ **Approved in Part** — Specify below which changes **do not** apply.
- ☐ **Denied** — State the reasons for denial below.

Comments: _____

/Barbara Gilliam/ 1710
SPE **Art Unit**

UNITED STATES PATENT AND TRADEMARK OFFICE

Commissioner for Patents
United States Patent and Trademark Office
P.O. Box 1450
Alexandria, VA 22313-1450
www.uspto.gov

WALL, MARJAMA & BILINSKI LLP
4TH FLOOR
101 S. SALINA ST.
SYRACUSE NY 13202

MAILED

JAN 18 2011

OFFICE OF PETITIONS

In re Patent No. 7,014,392 :
Issue Date: March 21, 2006 :
Application No. 10/690,913 : NOTICE
Filed: July 10, 2003 :
Attorney Docket No. 1179-014 :

This is a notice regarding your request for acceptance of a fee deficiency submission under 37 CFR 1.28. On September 1, 1998, the Court of Appeals for the Federal Circuit held that 37 CFR 1.28(c) is the sole provision governing the time for correction of the erroneous payment of the issue fee as a small entity. **See DH Technology v. Synergystex International, Inc. 154 F.3d 1333, 47 USPQ2d 1865 (Fed. Cir. Sept. 1, 1998).**

The Office no longer investigates or rejects original or reissue applications under 37 CFR 1.56. **1098 Off. Gaz. Pat. Office 502 (January 3, 1989)**. Therefore, nothing in this Notice is intended to imply that an investigation was done.

Your fee deficiency submission under 37 CFR 1.28 is hereby **NOT ACCEPTED**.

The fee deficiency cannot be accepted because the itemization was not provided within one (1) month of the of the mail date of the decision dated February 12, 2010. In the response dated September 28, 2010, Applicant stated the delay in filing a reply was due to the notification from the USPTO not being received. In this regard, any future response should include any evidence to prove Applicant never received the decision dated February 12, 2010.

Inquiries related to this communication should be directed to Diane Goodwyn at (571) 272-6735.

Thurman K. Page
Petitions Examiner
Office of Petitions

UNITED STATES PATENT AND TRADEMARK OFFICE

Commissioner for Patents
United States Patent and Trademark Office
P.O. Box 1450
Alexandria, VA 22313-1450
www.uspto.gov

HISCOCK & BARCLAY, LLP
ONE PARK PLACE
300 SOUTH STATE STREET
SYRACUSE NY 13202-2078

MAILED
MAR 14 2011
OFFICE OF PETITIONS

In re Patent No. 7,014,392	:	
Issue Date: March 21, 2006	:	
Application No. 10/690,913	:	NOTICE
Filed: July 10, 2003	:	
Attorney Docket No. 1179-014	:	

This is a notice regarding your request for acceptance of a fee deficiency submission under 37 CFR 1.28. On September 1, 1998, the Court of Appeals for the Federal Circuit held that 37 CFR 1.28(c) is the sole provision governing the time for correction of the erroneous payment of the issue fee as a small entity. **See DH Technology v. Synergystex International, Inc. 154 F.3d 1333, 47 USPQ2d 1865 (Fed. Cir. Sept. 1, 1998).**

The Office no longer investigates or rejects original or reissue applications under 37 CFR 1.56. **1098 Off. Gaz. Pat. Office 502 (January 3, 1989)**. Therefore, nothing in this Notice is intended to imply that an investigation was done.

Your fee deficiency submission under 37 CFR 1.28 is hereby **ACCEPTED**.

The evidence provided for the delay in responding to the Decision dated February 12, 2010, has been accepted.

Inquiries related to this communication should be directed to Diane Goodwyn at (571) 272-6735.

Thurman K. Page
Petitions Examiner
Office of Petitions

UNITED STATES PATENT AND TRADEMARK OFFICE

Commissioner for Patents
United States Patent and Trademark Office
P.O. Box 1450
Alexandria, VA 22313-1450
www.uspto.gov

KONRAD RAYNES & VICTOR, LLP.
ATTN: IBM37
315 SOUTH BEVERLY DRIVE, SUITE 210
BEVERLY HILLS, CA 90212

MAILED

NOV 08 2011

OFFICE OF PETITIONS

In re Patent No. 7,275,059	:	
Issue Date: September 25, 2007	:	
Application No. 10/691,134	:	DECISION GRANTING PETITIONS
Filed: October 21, 2003	:	
Attorney Docket No. SJO919970205US4	:	

This is a decision on the petition filed September 14, 2011, requesting under 37 CFR 1.182 that the acceptance of the terminal disclaimer filed February 27, 2007, be withdrawn. This is also a decision on the petition under 37 CFR 1.182, filed September 26, 2011, for expedite processing of the present petition.

The petition for expedited handling under 1.182 is **granted**.

The petition under 1.182, filed on September 14, 2011, is **granted** to the extent indicated.

Petitioner states that the Terminal Disclaimer submitted on February 27, 2007, should be withdrawn since the numbers in the patent being disclaimed were inadvertently transposed. Unfortunately, there was no transposition of the numbers, rather, an incorrect number was given.

The USPTO will not grant a request to withdraw or amend a recorded terminal disclaimer in an issued patent on the grounds that the rules of practice and 35 USC 253 do not include a mechanism for withdrawal or amendment of such a terminal disclaimer. See MPEP 1490; Bayer AG v. Carlsbad Technology Inc., 298 F.3d 1377, 64 USPQ2d 1045, 1048-49 (CAFC 2002). As such, the original terminal disclaimer unfortunately cannot be "removed" as petitioner requests. Nevertheless, as a newly filed, corrective Terminal Disclaimer is regular in form and is accompanied by the requisite fee, it is accepted, placed in this file, and thus has been recorded against the instant patent.

Telephone inquiries concerning this decision should be directed to Andrea Smith at (571) 272-3226.

Andrea Smith
Petitions Examiner
Office of Petitions

David Bucci
Petitions Examiner

UNITED STATES PATENT AND TRADEMARK OFFICE

Commissioner for Patents
United States Patent and Trademark Office
P.O. Box 1450
Alexandria, VA 22313-1450
www.uspto.gov

Paper No.

INTEL CORPORATION
c/o CPA Global
P.O. BOX 52050
MINNEAPOLIS MN 55402

MAILED

DEC 21 2010

OFFICE OF PETITIONS

Patent No. RE39540 :
Sokolov et al. :
Issue Date: April 3, 2007 :
Application No. 10/691,432 : DECISION ON PETITION
Filed: October 23, 2003 :
Attorney Docket No. P8297R :

This is a decision on the PETITION TO ACCEPT UNINTENTIONALLY DELAYED PAYMENT OF MAINTENANCE FEE IN AN EXPIRED PATENT (37 CFR 1.378(c)) filed October 20, 2010.

The petition is **DISMISSED**.

The reissued patent issued January 22, 2002. This reissue patent is based on an original non-reissue application, which issued on October 23, 2001.

37 CFR 1.362(h) provides that:

> the periods specified in §§ 1.362 (d) and (e) with respect to a reissue application, including a continuing reissue application thereof, are counted from the date of grant of the original non-reissue application on which the reissued patent is based.

Accordingly, the grace period for paying the first maintenance fee provided in 37 CFR 1.362(e) expired at midnight on October 23, 2005. This petition was filed almost five years later.

37 CFR 1.378(c) Any petition to accept an unintentionally delayed payment of a maintenance fee filed under paragraph (a) of this section must be filed within twenty-four months after the six-month grace period provided in § 1.362(e) and must include:

(1) the required maintenance fee set forth in §1.20(e)-(g);
(2) the surcharge set forth in § 1.20(i)(2); and
(3) a statement that the delay in payment of the maintenance fee was unintentional.

This petition was not filed within twenty-four months after the actual expiration of the six-month grace period at midnight on October 24, 2005. Accordingly, the instant petition cannot be granted under 37 CFR 1.378(c).

As the twenty-four month period has expired, patentee may only obtain reinstatement of this patent via the provisions of 37 CFR 1.378(b). Under such provisions, patentee must show that the entire delay in paying the maintenance fees was unavoidable.

In view thereof, the petition is dismissed.

Any request for reconsideration of this decision must be filed within **TWO MONTHS** of the mailing date of this decision. This period is not extendable under the provisions of 37 CFR 1.136(a). Any such petition for reconsideration must be accompanied by the $400 petition fee set forth in § 1.17(h). After decision on the petition for reconsideration, no further reconsideration or review of the matter will be undertaken by the Director. Accordingly, on request for reconsideration, it is extremely important the petitioner supply any and all relevant information and documentation in order to meet his burden of showing unintentional delay.

If on request for reconsideration, the delayed payment of the maintenance fee is not accepted, then the maintenance fee and the surcharge set forth in §1.20(i) are subject to refund following the decision on the petition for reconsideration, or after the expiration of the time for filing such a petition for reconsideration, if none is filed. (Petitioner may request a refund of the maintenance fee and surcharge by writing to the Office of Finance, Refund Section, Commissioner for Patents, Washington DC 20231. A copy of the last decision rendered should accompany the request for refund).

Alternatively, patentee may file a petition under 37 CFR 1.378(b). The filing of such a petition should not be intentionally delayed, as the entire delay will be considered in determining whether patentee has shown that the delay in paying

the maintenance fee was unavoidable within the meaning of 37 CFR 1.378(b).

The address set forth on the petition, filed by a registered practitioner, is different than the correspondence address of record. A courtesy copy of this decision is being mailed to the address on the petition. However, all future correspondence will be mailed to the address of record until such time as a proper change of correspondence address (patent) is filed.

Further correspondence with respect to this decision should be addressed as follows:

By mail: Mail Stop Petition
Commissioner for Patents
P.O. Box 1450
Alexandria, VA 22313-1450

By fax: (571) 273-8300
ATTN: Office of Petitions

By hand: Customer Service Window
Randolph Building
401 Dulany Street
Alexandria, VA 22314

Telephone inquiries related to this decision should be directed to the undersigned at (571) 272-3219.

Nancy Johnson
Senior Petitions Attorney
Office of Petitions

cc: Kendal Sheets
CPA Global
2318 Mill Road
Alexandria VA 22314

UNITED STATES PATENT AND TRADEMARK OFFICE

Commissioner for Patents
United States Patent and Trademark Office
P.O. Box 1450
Alexandria, VA 22313-1450
www.uspto.gov

Paper No.

INTEL CORPORATION
c/o CPA Global
P.O. BOX 52050
MINNEAPOLIS MN 55402

MAILED
APR 28 2011
OFFICE OF PETITIONS

Patent No. RE39540	:	
Sokolov et al.	:	
Issue Date: April 3, 2007	:	
Application No. 10/691,432	:	DECISION ON PETITION
Filed: October 23, 2003	:	
Attorney Docket No. P8297R	:	

This is a decision on the REQUEST FOR RECONSIDERATION OF DECISION ON PETITION TO ACCEPT UNINTENTIONALLY DELAYED PAYMENT OF MAINTENANCE FEE filed April 12, 2011.

The decision on petition mailed December 21, 2010 is hereby withdrawn.

For the reasons stated herein, the petition under 37 CFR 1.378(c) is **GRANTED**. No fee is required for consideration under 37 CFR 1.378(e).

By decision mailed December 21, 2010, the petition under 37 CFR 1.378(c) was dismissed. It was determined that the grace period for paying the first maintenance fee provided in 37 CFR 1.362(e) expired at midnight on October 23, 2005, with no payment received. Accordingly, the petition filed almost five years later was dismissed as a petition under 1.378(c) must be filed within 24 months of the expiration of the patent.

In response, patentee filed the instant request for reconsideration, pointing out that the first maintenance fee had been paid in the original patent on April 25, 2005. Further, their petition filed October 20, 2010, petitioned to have the second (8th year) maintenance fee accepted, not the first (4th year) fee.

Patentee is correct. The undersigned erred in overlooking the payment of the first maintenance fee in the record of the original patent. The petition as originally filed on October 20, 2010 included payment of both the first and second maintenance fees and late surcharges where the delay is unintentional for both. Thus, the undersigned thought that the first maintenance fee had not been previously paid.

The reissued patent issued January 22, 2002. This reissue patent is based on an original non-reissue application[1], which issued on October 23, 2001. A further review of Office records confirms, as stated by patentee, that the first maintenance fee was paid in the original patent No. 6,307,878 on April 25, 2005. The period for paying the second maintenance fee expired on October 23, 2009, with no payment received.

The requirements of 37 CFR 1.378(c)[2] for accepting unintentionally delayed payment of the second maintenance fee have been met (and were met as of the filing of the petition on October 20, 2010). The initial petition was filed within twenty-four months after the actual expiration of the six-month grace period at midnight on October 23, 2009. As required, petitioner submitted with the petition the required maintenance fee, the surcharge for accepting an unintentionally delayed maintenance fee after expiration, and a statement that the delay in payment of the maintenance fee was unintentional.

Accordingly, the maintenance fee in this case is hereby accepted and the above-identified patent is hereby reinstated as of the mail date of this decision.

---

[1] 37 CFR 1.362(h) provides that:

> the periods specified in §§ 1.362 (d) and (e) with respect to a reissue application, including a continuing reissue application thereof, are counted from the date of grant of the original non-reissue application on which the reissued patent is based.

[2] 37 CFR 1.378(c) Any petition to accept an unintentionally delayed payment of a maintenance fee filed under paragraph (a) of this section must be filed within twenty-four months after the six-month grace period provided in § 1.362(e) and must include:

> (1) the required maintenance fee set forth in §1.20(e)-(g);
> (2) the surcharge set forth in § 1.20(i)(2); and
> (3) a statement that the delay in payment of the maintenance fee was unintentional.

The overpayment of the first maintenance fee and surcharge is being refunded to the Deposit Account, as authorized.

Telephone inquiries related to this decision should be directed to the undersigned at (571) 272-3219.

Nancy Johnson
Senior Petitions Attorney
Office of Petitions

cc: Kendal Sheets
CPA Global
2318 Mill Road
Alexandria VA 22314

UNITED STATES PATENT AND TRADEMARK OFFICE

Commissioner for Patents
United States Patent and Trademark Office
P.O. Box 1450
Alexandria, VA 22313-1450
www.uspto.gov

TERRY M. GERNSTEIN
1015 SALT MEADOW LANE
MCLEAN VA 22101

MAILED

OCT 06 2010

OFFICE OF PETITIONS

In re Patent No. 6,986,351 Issued: January 17, 2006 Application No. 10/691,649 Filed: October 24, 2003 Title: System And Elements For Managing Therapeutic Gas Administration To A Spontaneously Breathing Non-Ventilated Patient	: : : : :	DECISION ON PETITION

This is a decision on the petition under 37 CFR 1.378(c), filed July 23, 2010, to accept the delayed payment of a maintenance fee for the above-identified patent.

The petition is **GRANTED**.

This patent expired on January 18, 2010 for failure to pay the three and one-half year maintenance fee. Since this petition was submitted within twenty-four months after the six-month grace period provided in 37 CFR 1.362(e), the petition was timely filed under the provisions of 37 CFR 1.378(c).

The maintenance fee is hereby accepted and the above-identified patent is reinstated as of the mail date of this decision.

Additionally, the file does not indicate a change of address has been submitted, although the address given on the petition differs from the address of record. If appropriate, a request to change the address of record should be filed. Petitioner should note that a change of correspondence address would not affect the fee address. Therefore, if petitioner desires to receive future correspondence, which **may** be mailed regarding maintenance fees for the above-identified patent, the "fee address" and/or "customer number" forms should be submitted. A courtesy copy of this decision is being mailed to the address given on the petition; however, the Office will mail all future correspondence solely to the address of record.

Telephone inquiries concerning this decision should be directed to the undersigned at (571) 272-7751.

Joan Olszewski
Petitions Examiner
Office of Petitions

cc: Doug Hole
19835-120 Street
Edmonton, Alberta Canada T5H 3P9

UNITED STATES PATENT AND TRADEMARK OFFICE

Commissioner for Patents
United States Patent and Trademark Office
P.O. Box 1450
Alexandria, VA 22313-1450
www.uspto.gov

BANNER & WITCOFF, LTD
ATTORNEYS FOR CLIENT 004770
1100 13TH STREET
SUITE 1200
WASHINGTON, DC 20005-4051

MAILED

JUN 06 2011

OFFICE OF PETITIONS

In re Application of Scott Davis Application No. 10/691,715 Filed: October 22, 2003 Attorney Docket No. 004770.00862	: : : : :	DECISION ON PETITION

This is a decision on the petition under 37 CFR 1.181 (no fee), filed April 26, 2011, requesting withdrawal of the holding of abandonment in the above-identified application.

This application was held abandoned for failure to timely file a response to the non-final Office action mailed August 31, 2010. A Notice of Abandonment was mailed on April 14, 2011.

A review of the written record indicates no irregularity in the mailing of the Office action and, in the absence of any irregularity, there is a strong presumption that the Office action was properly mailed to the practitioner at the address of record. This presumption may be overcome by a showing that the Office action was not in fact received. In this regard, the showing required to establish the failure to receive the Office action must consist of the following:

1. a statement from practitioner stating that the Office action was not received by the practitioner;
2. a statement from the practitioner attesting to the fact that a search of the file jacket and docket records indicates that the Office action was not received; and
3. a copy of the docket record where the nonreceived Office action would have been entered had it been received and docketed must be attached to and referenced in the practitioner's statement.

The petition satisfies the above-stated requirements. Accordingly, the petition is **GRANTED**. In view of the above, the holding of abandonment is withdrawn.

This application is being referred to Technology Center Art Unit 2175 for re-mailing of the Office action of August 31, 2010. The period for reply will run from the mailing date of the Office action.

Telephone inquiries regarding this decision should be directed to the undersigned at (571) 272-3226.

Andrea Smith
Petitions Examiner
Office of Petitions

UNITED STATES PATENT AND TRADEMARK OFFICE

Commissioner for Patents
United States Patent and Trademark Office
P.O. Box 1450
Alexandria, VA 22313-1450
www.uspto.gov

MAILED
DEC 09 2010
OFFICE OF PETITIONS

PATENT LAW OFFICES OF DAVID MILLERS
1221 Sun Ridge Road
Placerville CA 95667

In re Application of	:	
James P. SIEPMANN	:	
Application No. 10/691,869	:	ON PETITION
Filed: October 22, 2003	:	
Attorney Docket No. LTI.PAU.02	:	

This is a decision on the petition under 37 CFR 1.137(b), filed June 11, 2010, to revive the above-identified application.

The petition is **GRANTED**.

The above-identified application became abandoned for failure to submit the issue fee and publication fee in a timely manner in reply to the Notice of Allowance mailed June 26, 2006, which set a statutory period for reply of three (3) months. Accordingly, by operation of law, the above-identified application became abandoned on September 27, 2006.

The petition satisfies the conditions for revival pursuant to the provisions of 37 CFR 1.137(b) in that (1) the reply in the form of payment of the Issue and Publication Fee(s); (2) the petition fee of $810; and (3) the required statement of unintentional delay have been received. Accordingly, the Issue and Publication Fee payment is accepted as having been unintentionally delayed.

It is not apparent whether the person signing the statement of unintentional delay was in a position to have firsthand knowledge of the facts and circumstances of the delay at issue. Nevertheless, such statement is being treated as having been made as the result of a reasonable inquiry into the facts and circumstances of such delay. See 37 CFR 10.18(b) and Changes to Patent Practice and Procedure; Final rule Notice, 62 Fed. Reg. 53131, 53178 (October 10, 1997), 1203 Off. Gaz. Pat. Office 63, 103 (October 21, 1997). In the event that such an inquiry has not been made, petitioner must make such an inquiry. If such inquiry results in the discovery that it is not correct that the entire delay in filing the required reply from the due date for the reply until the filing of a grantable petition pursuant of 37 CFR 1.137(b) was unintentional, petitioner must notify the Office.

Application No. 10/691,869

Telephone inquiries concerning this decision should be directed to the undersigned at (571) 272-7099.

The application file is being referred to the Office of Data Management.

David Bucci
Petitions Examiner
Office of Petitions

UNITED STATES PATENT AND TRADEMARK OFFICE

Commissioner for Patents
United States Patent and Trademark Office
P.O. Box 1450
Alexandria, VA 22313-1450
www.uspto.gov

SHOOK, HARDY & BACON L.L.P.
(MICROSOFT CORPORATION)
INTELLECTUAL PROPERTY DEPARTMENT
2555 GRAND BOULEVARD
KANSAS CITY MO 64108-2613

MAILED

OCT 22 2010

OFFICE OF PETITIONS

In re Application of	:	
McKee et al.	:	
Application No. 10/691,885	:	DECISION ON PETITION
Filed: October 23, 2003	:	
Attorney Docket No. MFCP.109834	:	

This is a decision on the petition, filed October 13, 2010, which is being treated as a petition under 37 CFR 1.181 (no fee) requesting withdrawal of the holding of abandonment in the above-identified application.

The petition is **DISMISSED**.

This application was held abandoned for failure to reply to the Notice to File Corrected Application Papers (Notice), mailed July 22, 2010, which set a two (2) month statutory period for reply. A Notice of Abandonment was mailed on October 6, 2010.

Petitioner asserts that the Office action dated July 22, 2010 was not received.

A review of the written record indicates no irregularity in the mailing of the Office action, and, in the absence of any irregularity, there is a strong presumption that the Office action was properly mailed to the practitioner at the address of record. This presumption may be overcome by a showing that the Office action was not in fact received. In this regard, the showing required to establish the failure to receive the Office action must consist of the following:

(1) A statement from the practitioner describing the system used for recording an Office action received at the correspondence address of record with the USPTO. The statement should establish that the docketing system is sufficiently reliable.

(2) A statement from the practitioner that the Office action was not received at the correspondence address of record, and that a search of the practitioner's record(s), including any file jacket or the equivalent, and the application contents, indicates that the Office action was not received.

(3) A copy of the record(s) used by the practitioner where the non-received Office action would have been entered had it been received is required. A copy of the practitioner's record(s) required to show non-receipt of the Office action should include the master docket for the firm.

See MPEP § 711.03(c) under subheading "Petition to Withdraw Holding of Abandonment Based on Failure to Receive Office Action," and "Withdrawing the Holding of Abandonment When Office Actions Are Not Received," 1156 Official Gazette 53 (November 16, 1993).

The instant petition does not comply with items (1) and (3) above.

As to item (1), petitioner did not include a statement on how the docket system in place is used or the reliability of said system.

As to item (3), although petitioner did include a copy of the docket record for the specific application, the master docket was not included.

A copy of the Notice is enclosed for petitioner's convenience.

Further correspondence with respect to this matter should be addressed as follows:

By mail: Mail Stop PETITIONS
Commissioner for Patents
Post Office Box 1450
Alexandria, VA 22313-1450

By hand: Customer Window located at:

U.S. Patent and Trademark Office
Customer Service Window Randolph Building
401 Dulany Street
Alexandria, VA 22314

By fax: (571) 273-8300
ATTN: Office of Petitions

Any questions concerning this matter may be directed to the undersigned at (571) 272-3206.

Liana Walsh
Petitions Examiner
Office of Petitions

Enclosure: Notice to File Corrected Application Papers (previously mailed July 22, 2010)

UNITED STATES PATENT AND TRADEMARK OFFICE

Commissioner for Patents
United States Patent and Trademark Office
P.O. Box 1450
Alexandria, VA 22313-1450
www.uspto.gov

Application No. : 10691885
Applicant : McKee
Filing Date : 10/23/2003
Date Mailed : 07/22/2010

NOTICE TO FILE CORRECTED APPLICATION PAPERS

Notice of Allowance Mailed

This application has been accorded an Allowance Date and is being prepared for issuance. The application, however, is incomplete for the reasons below.

Applicant is given 2 month(s) from the mail date of this Notice within which to respond.

The informalities requiring correction are indicated in the attachment(s). If the informality pertains to the abstract, specification (including claims) or drawings, the informality must be corrected with an amendment in compliance with 37 CFR 1.121 (or, if the application is a reissue application, 37 CFR 1.173). Such an amendment may be filed after payment of the issue fee if limited to correction of informalities noted herein. See Waiver of 37 CFR 1.312 for Documents Required by the Office of Patent Publication, 1280 Off. Gaz. Patent Office 918 (March 23, 2004). In addition, if the informality is not corrected until after payment of the issue fee, for purposes of 35 U.S.C. 154(b)(1)(iv), "all outstanding requirements" will be considered to have been satisfied when the informality has been corrected. A failure to respond within the above-identified time period will result in the application being ABANDONED. **This period for reply is NOT extendable under 37 CFR 1.136(a).**

See attachment(s).

A copy of this notice MUST be returned with the reply. Please address response to "Mail Stop Issue Fee,Commissioner for Patents, P.O. Box 1450, Alexandria, VA 22313-1450".

/Doug Gemmill/
Publishing Division
Office of Data Management
(571) 272-4200

Application No. 10691885

IDENTIFICATION OF APPLICATION DEFICIENCIES

☐ Applicant must provide legible text for the following item(s).

- ☐ Specification filed , page(s) .
- ☐ Claims filed , claim(s) .
- ☐ Oath/declaration filed .
- ☐ Other: .

☒ Applicant must provide missing information on the following page(s) of the specification by amending the specification to add the missing text. No new matter may be added.
pages 1 and 2 (para. 0001), page 3, line 13, page 16, line 21, page 21, line 3 (please provide missing serial numbers)..

☐ Applicant must provide an Abstract of the Disclosure.

☐ Applicant has submitted a DECLARATION (37 CFR 1.63) FOR A UTILITY OR DESIGN APPLICATION USING AN APPLICATION DATA SHEET (37 CFR 1.76) (e.g., form PTO/SB/01A). The Application Data Sheet, however, is not present with the filed application. Applicant must submit an Application Data Sheet or file a new oath or declaration (e.g., PTO/SB/01) executed by the inventors and containing the information required in 37 CFR 1.63.

☐ Applicant must provide an executed declaration.

☐ Applicant must provide a declaration signed by inventor(s) .

☐ The oath or declaration is defective. A new oath or declaration in compliance with 37 CFR 1.67(a) identifying this application by application number and filing date may be required. See MPEP §§ 602.01 and 602.02. The oath or declaration is defective because:

- ☐ It does not identify the city and either state or foreign country of residence of each inventor. The residence information may be provided on either an application data sheet or a supplemental oath or declaration.
- ☐ The oath or declaration for the patent application was filed prior to December 1, 1997, and applicant has not given a post office address anywhere in the application papers as required by 37 CFR 1.33(a), which was in effect at the time of filing of the oath or declaration. A statement over applicant's signature providing a complete post office address is required.
- ☐ It does not identify the mailing address of each inventor. A mailing address is an address at which an inventor customarily receives his or her mail and may be either a home or business address. The mailing address should include the ZIP Code designation. The mailing address may be provided in an application data sheet or a supplemental oath or declaration. See 37 CFR 1.63(c) and 37 CFR 1.76.

☐ Per 37 CFR § 1.63(a)(2), applicant must provide at least one given name without abbreviation for inventor(s) .

Application No. 10691885

IDENTIFICATION OF SPECIFICATION/DRAWING INCONSISTENCIES

☐ On Page of the specification there is a brief description of FIG. , but the drawings filed do not include a drawing with that designation. Applicant must respond either by supplying the omitted drawing or by amending the specification to remove all references to that drawing.

☒ The drawings filed 10/23/2003 include FIG. 12, but the specification's brief description of the drawings does not describe a drawing with that designation. Applicant must respond either by amending the specification to add a brief description of that drawing or by correcting the drawings to remove the drawing in question.

☐ Drawings are present in the application and are referred to in the detailed description of the invention, but the specification does not contain a brief description of the drawings as required by 37 CFR 1.74 and 37 CFR 1.77(b)(8).

☐ Page of the specification refers to FIG. , but no drawing with that designation is described in the brief description of the drawings and no drawing with that designation is present in the application. Applicant must respond either by amending the specification to remove all references to that drawing, or by supplying that drawing and amending the specification to add a brief description of it.

☐ OTHER:

☐ COMMENTS:

UNITED STATES PATENT AND TRADEMARK OFFICE

Commissioner for Patents
United States Patent and Trademark Office
P.O. Box 1450
Alexandria, VA 22313-1450
www.uspto.gov

SHOOK, HARDY & BACON L.L.P.
(MICROSOFT CORPORATION)
INTELLECTUAL PROPERTY DEPARTMENT
2555 GRAND BOULEVARD
KANSAS CITY MO 64108-2613

MAILED
NOV 17 2010
OFFICE OF PETITIONS

In re Application of	:	
McKee et al.	:	
Application No. 10/691,885	:	DECISION ON PETITION
Filed: October 23, 2003	:	
Attorney Docket No. MFCP.109834	:	

This is a decision on the renewed petition, filed November 1, 2010, which is being treated as a petition under 37 CFR 1.181 (no fee) requesting withdrawal of the holding of abandonment in the above-identified application.

The petition is **GRANTED**.

This application was held abandoned for failure to reply to the Notice to File Corrected Application Papers (Notice), mailed July 22, 2010, which set a two (2) month shortened statutory period for reply. A Notice of Abandonment was mailed on October 6, 2010.

Petitioner asserts that the Office action dated July 22, 2010 was not received.

A review of the written record indicates no irregularity in the mailing of the Office action, and, in the absence of any irregularity, there is a strong presumption that the Office action was properly mailed to the practitioner at the address of record. This presumption may be overcome by a showing that the Office action was not in fact received. In this regard, the showing required to establish the failure to receive the Office action must consist of the following:

(1) A statement from the practitioner describing the system used for recording an Office action received at the correspondence address of record with the USPTO. The statement should establish that the docketing system is sufficiently reliable.

(2) A statement from the practitioner that the Office action was not received at the correspondence address of record, and that a search of the practitioner's record(s), including any file jacket or the equivalent, and the application contents, indicates that the Office action was not received.

(3) A copy of the record(s) used by the practitioner where the non-received Office action would have been entered had it been received is required. A copy of the practitioner's record(s) required to show non-receipt of the Office action should include the master docket for the firm.

See MPEP § 711.03(c) under subheading "Petition to Withdraw Holding of Abandonment Based on Failure to Receive Office Action," and "Withdrawing the Holding of Abandonment When Office Actions Are Not Received," 1156 Official Gazette 53 (November 16, 1993).

The petition satisfies the above-stated requirements. Accordingly, the application was not abandoned in fact.

In view of the above, the Notice of Abandonment is hereby vacated and the holding of abandonment withdrawn.

This application is being referred to the Office of Data Management technical support staff for re-mailing the Office action of July 22, 2010. The period for reply will run from the mailing date of the Office action.

Liana Walsh
Petitions Examiner
Office of Petitions

PTO/SB/66 (03-09)
Approved for use through 03/31/2012. OMB 0651-0016
U.S. Patent and Trademark Office: U.S. DEPARTMENT OF COMMERCE
Under the Paperwork Reduction Act of 1995, no persons are required to respond to a collection of information unless it displays valid OMB control number.

PETITION TO ACCEPT UNINTENTIONALLY DELAYED PAYMENT OF MAINTENANCE FEE IN AN EXPIRED PATENT (37 CFR 1.378(c))

Patent Number	Issue Date (YYYY-MM-DD)	Application Number	Filing Date (YYYY-MM-DD)	Docket Number (if applicable)
7,099,136	2006-08-29	10/691,957	2003-10-23	

CAUTION: Maintenance fee (and surcharge, if any) payment must correctly identify: (1) the patent number and (2) the application number of the actual U.S. application leading to issuance of that patent to ensure the fee(s) is/are associated with the correct patent. 37 CFR 1.366(c) and (d).

SMALL ENTITY
☒ Patentee claims, or has previously claimed, small entity status. See 37 CFR 1.27.

LOSS OF ENTITLEMENT TO SMALL ENTITY STATUS
☐ Patentee is no longer entitled to small entity status. See 37 CFR 1.27(g)

NOT Small Entity		Small Entity	
Fee	Code	Fee	Code
○ 3 ½ year	(1551)	◉ 3 ½ year	(2551)
○ 7 ½ year	(1552)	○ 7 ½ year	(2552)
○ 11 ½ year	(1553)	○ 11 ½ year	(2553)

SURCHARGE
The surcharge required by 37 CFR 1.20(i)(2) (Fee Code 1558) must be paid as a condition of accepting unintentionally delayed payment of the maintenance fee.

MAINTENANCE FEE (37 CFR 1.20(e)-(g))
The appropriate maintenance fee must be submitted with this petition.

STATEMENT
THE UNDERSIGNED CERTIFIES THAT THE DELAY IN PAYMENT OF THE MAINTENANCE FEE TO THIS PATENT WAS UNINTENTIONAL

PETITIONER(S) REQUEST THAT THE DELAYED PAYMENT OF THE MAINTENANCE FEE BE ACCEPTED AND THE PATENT REINSTATED

THIS PORTION MUST BE COMPLETED BY THE SIGNATORY OR SIGNATORIES

37 CFR 1.378(d) states: "Any petition under this section must be signed by an attorney or agent registered to practice before the Patent and Trademark Office, or by the patentee, the assignee, or other party in interest."

I certify, in accordance with 37 CFR 1.4(d)(4) that I am

◉ An attorney or agent registered to practice before the Patent and Trademark Office

○ A sole patentee

○ A joint patentee; I certify that I am authorized to sign this submission on behalf of all the other patentees.

○ A joint patentee; all of whom are signing this e-petition

○ The assignee of record of the entire interest

Under the Paperwork Reduction Act of 1995, no persons are required to respond to a collection of information unless it displays valid OMB control number.

Patent Practitioner			
A signature of the applicant or representative is required in accordance with 37 CFR 1.33 and 10.18. Please see 37 CFR 1.4(d) for the form of the signature			
Signature	/Nils Peter Mickelson/	Date (YYYY-MM-DD)	2010-11-15
Name	Nils Peter Mickelson	Registration Number	40089

This collection of information is required by 37 CFR 1.378(c). The information is required to obtain or retain a benefit by the public which is to file (and by the USPTO to process) an application. Confidentiality is governed by 35 U.S.C. 122 and 37 CFR 1.11 and 1.14. This collection is estimated to take 1 hour to complete, including gathering, preparing, and submitting the completed application form to the USPTO. Time will vary depending upon the individual case. Any comments on the amount of time you require to complete this form and/ or suggestions for reducing this burden, should be sent to the Chief Information Officer, U.S. Patent and Trademark Office, U.S. Department of Commerce, P.O. Box 1450, Alexandria, VA 22313-1450. DO NOT SEND FEES OR COMPLETED FORMS TO THIS ADDRESS. **This form can only be used when in conjunction with EFS-Web. If this form is mailed to the USPTO, it may cause delays in reinstating the patent.**

Privacy Act Statement

The Privacy Act of 1974 (P.L. 93-579) requires that you be given certain information in connection with your submission of the attached form related to a patent application or patent. Accordingly, pursuant to the requirements of the Act, please be advised that: (1) the general authority for the collection of this information is 35 U.S.C. 2(b)(2); (2) furnishing of the information solicited is voluntary; and (3) the principal purpose for which the information is used by the U.S. Patent and Trademark Office is to process and/or examine your submission related to a patent application or patent. If you do not furnish the requested information, the U.S. Patent and Trademark Office may not be able to process and/or examine your submission, which may result in termination of proceedings or abandonment of the application or expiration of the patent.

The information provided by you in this form will be subject to the following routine uses:

1. The information on this form will be treated confidentially to the extent allowed under the Freedom of Information Act (5 U.S.C. 552) and the Privacy Act (5 U.S.C. 552a). Records from this system of records may be disclosed to the Department of Justice to determine whether the Freedom of Information Act requires disclosure of these records.

2. A record from this system of records may be disclosed, as a routine use, in the course of presenting evidence to a court, magistrate, or administrative tribunal, including disclosures to opposing counsel in the course of settlement negotiations.

3. A record in this system of records may be disclosed, as a routine use, to a Member of Congress submitting a request involving an individual, to whom the record pertains, when the individual has requested assistance from the Member with respect to the subject matter of the record.

4. A record in this system of records may be disclosed, as a routine use, to a contractor of the Agency having need for the information in order to perform a contract. Recipients of information shall be required to comply with the requirements of the Privacy Act of 1974, as amended, pursuant to 5 U.S.C. 552a(m).

5. A record related to an International Application filed under the Patent Cooperation Treaty in this system of records may be disclosed, as a routine use, to the International Bureau of the World Intellectual Property Organization, pursuant to the Patent Cooperation Treaty.

6. A record in this system of records may be disclosed, as a routine use, to another federal agency for purposes of National Security review (35 U.S.C. 181) and for review pursuant to the Atomic Energy Act (42 U.S.C. 218(c)).

7. A record from this system of records may be disclosed, as a routine use, to the Administrator, General Services, or his/her designee, during an inspection of records conducted by GSA as part of that agency's responsibility to recommend improvements in records management practices and programs, under authority of 44 U.S.C. 2904 and 2906. Such disclosure shall be made in accordance with the GSA regulations governing inspection of records for this purpose, and any other relevant (i.e., GSA or Commerce) directive. Such disclosure shall not be used to make determinations about individuals.

8. A record from this system of records may be disclosed, as a routine use, to the public after either publication of the application pursuant to 35 U.S.C. 122(b) or issuance of a patent pursuant to 35 U.S.C. 151. Further, a record may be disclosed, subject to the limitations of 37 CFR 1.14, as a routine use, to the public if the record was filed in an application which became abandoned or in which the proceedings were terminated and which application is referenced by either a published application, an application open to public inspections or an issued patent.

9. A record from this system of records may be disclosed, as a routine use, to a Federal, State, or local law enforcement agency, if the USPTO becomes aware of a violation or potential violation of law or regulation.

UNITED STATES PATENT AND TRADEMARK OFFICE

Commissioner for Patents
United States Patent and Trademark Office
P.O. Box 1450
Alexandria, VA 22313-1450
www.uspto.gov

In re Patent No. 7099136
Issue Date: August 29,2006
Application No. 10691957
Filed: October 23,2003
Attorney Docket No. 03-040

:
:DECISION GRANTING PETITION
:UNDER 37 CFR 1.378(c)
:

This is a decision on the electronic petition, filed November 15,2010 ,under 37 CFR 1.378(c) to accept the unintentionally delayed payment of the 3.5 year maintenance fee for the above-identified patent.

The petition is **GRANTED**.

The maintenance fee is accepted, and the above-identified patent reinstated as of November 15,2010 . This decision also constitutes notice that the fee has been accepted. An electronic copy of the petition and this decision has been created as an entry in the Image File Wrapper. Nevertheless, petitioner should print and retain an independent copy.

Telephone inquiries related to this electronic decision should be directed to the Electronic Business Center at 1-866-217-9197.

UNITED STATES PATENT AND TRADEMARK OFFICE

Commissioner for Patents
United States Patent and Trademark Office
P.O. Box 1450
Alexandria, VA 22313-1450
www.uspto.gov

FAY SHARPE LLP
1228 Euclid Avenue, 5th Floor
The Halle Building
Cleveland OH 44115

MAILED
OCT 20 2010
OFFICE OF PETITIONS

In re Application of

Reich, et al.

Application No. 10/692,108

Filed: October 23, 2003

Attorney Docket No. 135937

DECISION ON PETITION

This is a decision on the petition under 37 CFR 1.181(a) to withdraw the holding of abandonment, filed December 20, 2005.

The petition under 37 CFR 1.181(a) to withdraw the holding of abandonment is **granted**.

This application was held abandoned on August 5, 2005, after it was believed that a proper response was received to the non-final Office action mailed May 4, 2005, which set a shortened statutory period for reply of three month from its mailing date. A Notice of Abandonment was mailed December 13, 2005.

Petitioner maintains that a proper and timely response to the non-final Office action was transmitted via facsimile on August 3, 2005. As evidence of the same, petitioner provides a copy of the transmittal containing a certificate of transmission dated August 3, 2005.

Petitioner's argument has been considered and is persuasive. Section 711.03(c) of the MPEP provides, in pertinent part, that:

> Where a certificate of mailing under 37 CFR 1.8, but not a postcard receipt, is relied upon in a petition to withdraw the holding of abandonment, see 37 CFR 1.8(b) and MPEP § 512. As stated in 37 CFR 1.8(b)(3) the statement that attests to the previous timely mailing or transmission of the correspondence must be on a personal knowledge basis, or to the satisfaction of the Director of the USPTO. If the statement attesting to the previous timely mailing is not made by the person who signed the Certificate of Mailing (i.e., there is no personal knowledge basis), then the statement attesting to the previous timely mailing should include evidence that supports the conclusion that the correspondence was actually mailed (e.g., copies of a mailing log establishing that correspondence was mailed for that application). When the correspondence is shown to have been timely filed based on a certificate of mailing, the correspondence is entered into

PALM with the actual date of receipt (i.e., the date that the duplicate copy of the papers was filed with the statement under 37 CFR 1.8).

A review of the copy of the Transmittal Form reveals that it contains a certificate of transmission dated August 3, 2005, that is signed by Nancy M. Grams who also provided a statement of her first-hand knowledge that the response was, in fact, filed on August 3, 2005. Petitioner properly used the protections offered by 37 CFR 1.8 and is, therefore, entitled to assert that the response transmitted August 3, 2005, is timely and complete by virtue of the certificate of transmission dated August 3, 2005, contained thereon. The petition is granted, accordingly.

The copy of the response filed August 3, 2005, is noted.

Further inquires regarding this decision may be directed to the undersigned at (571) 272-3222.

The application file is being forwarded to Technology Center GAU 2879 for further processing.

/Kenya A. McLaughlin/

Kenya A. McLaughlin
Petitions Attorney
Office of Petitions

UNITED STATES PATENT AND TRADEMARK OFFICE

Commissioner for Patents
United States Patent and Trademark Office
P.O. Box 1450
Alexandria, VA 22313-1450
www.uspto.gov

DILLON & YUDELL LLP
8911 NORTH CAPITAL OF TEXAS HWY, SUITE 2110
AUSTIN, TX 78759

MAILED

JUN 17 2011

OFFICE OF PETITIONS

In re Application of
Shengdong CHEN, et *al.*
Application No. 10/692,127
Filed: October 23, 2003
Attorney Docket No. **AUS920030659US1**

DECISION ON PETITION TO WITHDRAW FROM RECORD

This is a decision on the Request to Withdraw as attorney or agent of record under 37 C.F.R. § 1.36(b), filed June 15, 2011.

The request is **APPROVED**.

A grantable request to withdraw as attorney/agent of record must be signed by every attorney/agent seeking to withdraw or contain a clear indication that one attorney is signing on behalf of another/others.

The request was signed by Andrew J. Dillon on behalf of all attorneys of record. Andrew J. Dillon has been withdrawn as attorney or agent of record; all other attorneys remain of record.

The correspondence address of record remains unchanged.

Telephone inquiries concerning this decision should be directed to the undersigned at (571) 272-7253.

/Monica A. Graves/
Petitions Examiner, Office of Petitions

UNITED STATES PATENT AND TRADEMARK OFFICE

Commissioner for Patents
United States Patent and Trademark Office
P.O. Box 1450
Alexandria, VA 22313-1450
www.uspto.gov

PATENT LAW OFFICES OF DAVID MILLERS
1221 Sun Ridge Road
Placerville CA 95667

MAILED
MAY 19 2011
OFFICE OF PETITIONS

In re Application of	:	
James P. Siepmann et al.	:	
Application No. 10/692,175	:	DECISION ON PETITION
Filed: October 22, 2003	:	
Attorney Docket No. LTL003US	:	

This is a decision on the petition under the unintentional provisions of 37 CFR 1.137(b), filed April 11, 2011, to revive the above-identified application.

The petition is **GRANTED**.

The application became abandoned for failure to reply in a timely manner to the non-final Office action mailed December 14, 2006, which set a shortened statutory period for reply of three (3) months. No extensions of time under the provisions of 37 CFR 1.136(a) were obtained. Accordingly, the application became abandoned on March 15, 2007. A Notice of Abandonment was mailed on June 22, 2007.

The petition satisfies the requirements of 37 CFR 1.137(b) in that petitioner has supplied (1) the reply in the form of an amendment, (2) the petition fee of $810 and (3) a proper statement of unintentional delay. Accordingly, the amendment is accepted as being unintentionally delayed.

It is not apparent whether the person signing the statement of unintentional delay was in a position to have firsthand or direct knowledge of the facts and circumstances of the delay at issue. Nevertheless, such statement is being treated as having been made as the result of a reasonable inquiry into the facts and circumstances of such delay. See 37 CFR 10.18(b) and Changes to Patent Practice and Procedure; Final Rule Notice, 62 Fed. Reg. 53131, 53178 (October 10, 1997), 1203 Off. Gaz. Pat. Office 63, 103 (October 21, 1997). In the event that such an inquiry has not been made, petitioner must make such an inquiry. If such inquiry results in the discovery that it is not correct that the entire delay in filing the required reply from the due date for the reply until the filing of a grantable petition pursuant to 37 CFR 1.137(b) was unintentional, petitioner must notify the Office.

Telephone inquiries concerning this decision should be directed to Kimberly Inabinet at (571) 272-4618.

This application is being referred to Technology Center AU 2613 for appropriate action by the Examiner in the normal course of business on the reply received April 11, 2011.

/Kimberly Inabinet/

Kimberly Inabinet
Petitions Examiner
Office of Petitions

UNITED STATES PATENT AND TRADEMARK OFFICE

Commissioner for Patents
United States Patent and Trademark Office
P.O. Box 1450
Alexandria, VA 22313-1450
www.uspto.gov

PATENT LAW OFFICES OF DAVID MILLERS
1221 SUN RIDGE ROAD
PLACERVILLE CA 95667

MAILED
JUN 15 2011
OFFICE OF PETITIONS

In re Application of	:	
James P. Siepmann	:	
Application No. 10/692,176	:	DECISION ON PETITION
Filed: October 22, 2003	:	
Attorney Docket No. **LTL004US**	:	

This is a decision on the petition under the unintentional provisions of 37 CFR 1.137(b), filed April 12, 2011, to revive the above-identified application.

The petition is **GRANTED**.

The application became abandoned for failure to reply in a timely manner to the non-final Office action mailed, October 16, 2007, which set a shortened statutory period for reply of three (3) months. No extensions of time under the provisions of 37 CFR 1.136(a) were obtained. Accordingly, the application became abandoned on January 17, 2008.

The petition satisfies the requirements of 37 CFR 1.137(b) in that petitioner has supplied (1) the reply in the form of an amendment, (2) the petition fee of $810, and (3) an adequate statement of unintentional delay. Accordingly, the reply to the non-final Office action of October 16, 2007 is accepted as having been unintentionally delayed.

It is not apparent whether the person signing the statement of unintentional delay was in a position to have firsthand or direct knowledge of the facts and circumstances of the delay at issue. Nevertheless, such statement is being treated as having been made as the result of a reasonable inquiry into the facts and circumstances of such delay. See 37 CFR 10.18(b) and Changes to Patent Practice and Procedure; Final Rule Notice, 62 Fed. Reg. 53131, 53178 (October 10, 1997), 1203 Off. Gaz. Pat. Office 63, 103 (October 21, 1997). In the event that such an inquiry has not been made, petitioner must make such an inquiry. If such inquiry results in the discovery that it is not correct that the entire delay in filing the required reply from the due date for the reply until the filing of a grantable petition pursuant to 37 CFR 1.137(b) was unintentional, petitioner must notify the Office.

Telephone inquiries concerning this decision should be directed to Tredelle Jackson at 571-272-2783.

This application is being referred to Technology Center AU 2613 for appropriate action on the concurrently filed amendment.

Ramesh Krishnamurthy
Petitions Examiner
Office of Petitions

UNITED STATES PATENT AND TRADEMARK OFFICE

Commissioner for Patents
United States Patent and Trademark Office
P.O. Box 1450
Alexandria, VA 22313-1450
www.uspto.gov

In re Patent No. 7219184
Issue Date: May 15,2007
Application No. 10692425
Filed: October 23,2003
Attorney Docket No. 136.0002

:
:DECISION GRANTING PETITION
:UNDER 37 CFR 1.378(c)
:

This is a decision on the electronic petition, filed January 18,2012 ,under 37 CFR 1.378(c) to accept the unintentionally delayed payment of the 3.5 year maintenance fee for the above-identified patent.

The petition is **GRANTED**.

The maintenance fee is accepted, and the above-identified patent reinstated as of January 18,2012 .
This decision also constitutes notice that the fee has been accepted. An electronic copy of the petition and this decision has been created as an entry in the Image File Wrapper. Nevertheless, petitioner should print and retain an independent copy.

Telephone inquiries related to this electronic decision should be directed to the Electronic Business Center at 1-866-217-9197.

PTO/SB/66 (03-09)
Approved for use through 03/31/2012. OMB 0651-0016
U.S. Patent and Trademark Office: U.S. DEPARTMENT OF COMMERCE
Under the Paperwork Reduction Act of 1995, no persons are required to respond to a collection of information unless it displays valid OMB control number.

PETITION TO ACCEPT UNINTENTIONALLY DELAYED PAYMENT OF MAINTENANCE FEE IN AN EXPIRED PATENT (37 CFR 1.378(c))

Patent Number	Issue Date (YYYY-MM-DD)	Application Number	Filing Date (YYYY-MM-DD)	Docket Number (if applicable)
7,219,184	2007-05-15	10692425	2003-10-23	014270-000004

CAUTION: Maintenance fee (and surcharge, if any) payment must correctly identify: (1) the patent number and (2) the application number of the actual U.S. application leading to issuance of that patent to ensure the fee(s) is/are associated with the correct patent. 37 CFR 1.366(c) and (d).

SMALL ENTITY
☒ Patentee claims, or has previously claimed, small entity status. See 37 CFR 1.27.

LOSS OF ENTITLEMENT TO SMALL ENTITY STATUS
☐ Patentee is no longer entitled to small entity status. See 37 CFR 1.27(g)

NOT Small Entity		Small Entity	
Fee	Code	Fee	Code
○ 3 ½ year	(1551)	● 3 ½ year	(2551)
○ 7 ½ year	(1552)	○ 7 ½ year	(2552)
○ 11 ½ year	(1553)	○ 11 ½ year	(2553)

SURCHARGE
The surcharge required by 37 CFR 1.20(i)(2) (Fee Code 1558) must be paid as a condition of accepting unintentionally delayed payment of the maintenance fee.

MAINTENANCE FEE (37 CFR 1.20(e)-(g))
The appropriate maintenance fee must be submitted with this petition.

STATEMENT
THE UNDERSIGNED CERTIFIES THAT THE DELAY IN PAYMENT OF THE MAINTENANCE FEE TO THIS PATENT WAS UNINTENTIONAL

PETITIONER(S) REQUEST THAT THE DELAYED PAYMENT OF THE MAINTENANCE FEE BE ACCEPTED AND THE PATENT REINSTATED

THIS PORTION MUST BE COMPLETED BY THE SIGNATORY OR SIGNATORIES

37 CFR 1.378(d) states: "Any petition under this section must be signed by an attorney or agent registered to practice before the Patent and Trademark Office, or by the patentee, the assignee, or other party in interest."

I certify, in accordance with 37 CFR 1.4(d)(4) that I am

- ● An attorney or agent registered to practice before the Patent and Trademark Office
- ○ A sole patentee
- ○ A joint patentee; I certify that I am authorized to sign this submission on behalf of all the other patentees.
- ○ A joint patentee; all of whom are signing this e-petition
- ○ The assignee of record of the entire interest

Under the Paperwork Reduction Act of 1995, no persons are required to respond to a collection of information unless it displays valid OMB control number.

Patent Practitioner			
A signature of the applicant or representative is required in accordance with 37 CFR 1.33 and 10.18. Please see 37 CFR 1.4(d) for the form of the signature			
Signature	/michael g. johnston/	Date (YYYY-MM-DD)	2012-01-18
Name	Michael G. Johnston	Registration Number	38194

This collection of information is required by 37 CFR 1.378(c). The information is required to obtain or retain a benefit by the public which is to file (and by the USPTO to process) an application. Confidentiality is governed by 35 U.S.C. 122 and 37 CFR 1.11 and 1.14. This collection is estimated to take 1 hour to complete, including gathering, preparing, and submitting the completed application form to the USPTO. Time will vary depending upon the individual case. Any comments on the amount of time you require to complete this form and/ or suggestions for reducing this burden, should be sent to the Chief Information Officer, U.S. Patent and Trademark Office, U.S. Department of Commerce, P.O. Box 1450, Alexandria, VA 22313-1450. DO NOT SEND FEES OR COMPLETED FORMS TO THIS ADDRESS. **This form can only be used when in conjunction with EFS-Web. If this form is mailed to the USPTO, it may cause delays in reinstating the patent.**

Privacy Act Statement

The Privacy Act of 1974 (P.L. 93-579) requires that you be given certain information in connection with your submission of the attached form related to a patent application or patent. Accordingly, pursuant to the requirements of the Act, please be advised that: (1) the general authority for the collection of this information is 35 U.S.C. 2(b)(2); (2) furnishing of the information solicited is voluntary; and (3) the principal purpose for which the information is used by the U.S. Patent and Trademark Office is to process and/or examine your submission related to a patent application or patent. If you do not furnish the requested information, the U.S. Patent and Trademark Office may not be able to process and/or examine your submission, which may result in termination of proceedings or abandonment of the application or expiration of the patent.

The information provided by you in this form will be subject to the following routine uses:

1. The information on this form will be treated confidentially to the extent allowed under the Freedom of Information Act (5 U.S.C. 552) and the Privacy Act (5 U.S.C. 552a). Records from this system of records may be disclosed to the Department of Justice to determine whether the Freedom of Information Act requires disclosure of these records.

2. A record from this system of records may be disclosed, as a routine use, in the course of presenting evidence to a court, magistrate, or administrative tribunal, including disclosures to opposing counsel in the course of settlement negotiations.

3. A record in this system of records may be disclosed, as a routine use, to a Member of Congress submitting a request involving an individual, to whom the record pertains, when the individual has requested assistance from the Member with respect to the subject matter of the record.

4. A record in this system of records may be disclosed, as a routine use, to a contractor of the Agency having need for the information in order to perform a contract. Recipients of information shall be required to comply with the requirements of the Privacy Act of 1974, as amended, pursuant to 5 U.S.C. 552a(m).

5. A record related to an International Application filed under the Patent Cooperation Treaty in this system of records may be disclosed, as a routine use, to the International Bureau of the World Intellectual Property Organization, pursuant to the Patent Cooperation Treaty.

6. A record in this system of records may be disclosed, as a routine use, to another federal agency for purposes of National Security review (35 U.S.C. 181) and for review pursuant to the Atomic Energy Act (42 U.S.C. 218(c)).

7. A record from this system of records may be disclosed, as a routine use, to the Administrator, General Services, or his/her designee, during an inspection of records conducted by GSA as part of that agency's responsibility to recommend improvements in records management practices and programs, under authority of 44 U.S.C. 2904 and 2906. Such disclosure shall be made in accordance with the GSA regulations governing inspection of records for this purpose, and any other relevant (i.e., GSA or Commerce) directive. Such disclosure shall not be used to make determinations about individuals.

8. A record from this system of records may be disclosed, as a routine use, to the public after either publication of the application pursuant to 35 U.S.C. 122(b) or issuance of a patent pursuant to 35 U.S.C. 151. Further, a record may be disclosed, subject to the limitations of 37 CFR 1.14, as a routine use, to the public if the record was filed in an application which became abandoned or in which the proceedings were terminated and which application is referenced by either a published application, an application open to public inspections or an issued patent.

9. A record from this system of records may be disclosed, as a routine use, to a Federal, State, or local law enforcement agency, if the USPTO becomes aware of a violation or potential violation of law or regulation.

UNITED STATES PATENT AND TRADEMARK OFFICE

Commissioner for Patents
United States Patent and Trademark Office
P.O. Box 1450
Alexandria, VA 22313-1450
www.uspto.gov

MOORE & VAN ALLEN PLLC
P.O. BOX 13706
RESEARCH TRIANGLE PARK NC 27709

MAILED
JAN 30 2012
OFFICE OF PETITIONS

In re Patent No. 7,219,184	:	
Issue Date: May 15, 2007	:	
Application No. 10/692,425	:	DECISION ON REQUEST FOR REFUND
Filed: October 23, 2003	:	
Attorney Docket No. 136.0002	:	

This is a decision on the Request For Refund filed, January 19, 2012.

The request for refund is **GRANTED**

Applicants filed the above request for refund and states that "A Petition to Accept Unintentionally Delayed Payment of Maintenance Fee in an Expired Patent was filed on January 12, 2012, via facsimile. A second Petition to Accept Unintentionally Delayed Payment of Maintenance Fee in an Expired Patent was filed on January 18, 2012, via EFS-Web and payment of the associated fees was made by electronic funds transfer."

Applicants further states that "We received notice that our Deposit Account No. 13-4365 was debited $2205 on January 19, 2012, for the maintenance fee and surcharge required by 37 CFR 1.20(i)(2). This duplicate charge was made in error because the Petition to Accept Unintentionally Delayed Payment of Maintenance Fee in an Expired Patent was erroneously filed twice."

In view of the above, the Petition under 37 CFR 1.378(c), filed January 12, 2012 is dismissed as MOOT and the petition/surcharge and maintenance fee of $2,205.00 is being credited to petitioner's deposit account as requested.

Any questions concerning this matter may be directed to the undersigned at (571) 272-3208.

/KOC/
Karen Creasy
Petitions Examiner
Office of Petitions

UNITED STATES PATENT AND TRADEMARK OFFICE

Commissioner for Patents
United States Patent and Trademark Office
P.O. Box 1450
Alexandria, VA 22313-1450
www.uspto.gov

THE NATH LAW GROUP
112 SOUTH WEST STREET
ALEXANDRIA VA 22314

MAILED

JAN 21 2011

OFFICE OF PETITIONS

In re Patent No. 6,940,611	:	
Issue Date: September 6, 2005	:	
Application No. 10/692,678	:	NOTICE
Filed: October 27, 2003	:	
Attorney Docket No. 25582A	:	

This is a notice regarding your request for acceptance of a fee deficiency submission under 37 CFR 1.28 filed December 8, 2010.

On September 1, 1998, the Court of Appeals for the Federal Circuit held that 37 CFR 1.28(c) is the sole provision governing the time for correction of the erroneous payment of the issue fee as a small entity. **See DH Technology v. Synergystex International, Inc. 154 F.3d 1333, 47 USPQ2d 1865 (Fed. Cir. Sept. 1, 1998).**

The Office no longer investigates or rejects original or reissue applications under 37 CFR 1.56. **1098 Off. Gaz. Pat. Office 502 (January 3, 1989)**. Therefore, nothing in this Notice is intended to imply that an investigation was done.

Your fee deficiency submission under 37 CFR 1.28 is hereby **DISMISSED**.

The request under 37 CFR 1.28 cannot be accepted at this time since it appears that the petition is not signed by a person having authority to act in the above-identified patent.

Petitioner's attention is directed to 37 CFR 1.33(b), which states.

Amendments and other papers, except for written assertions pursuant to § 1.27(c)(2)(ii) of this part, filed in the application must be signed by:

(1) A registered patent attorney or patent agent of record appointed in compliance with § 1.32(b);
(2) A registered patent attorney or patent agent not of record who acts in a representative capacity under the provisions of § 1.34;
(3) An assignee as provided for under §3.71(b) of this chapter; or

(4) All of the applicants (§ 1.41(b)) for patent, unless there is an assignee of the entire interest and such assignee has taken action in the application in accordance with § 3.71 of this chapter.

Accordingly, the request cannot be accepted until it is signed by all inventors, an attorney or agent registered to practice before the U.S. Patent and Trademark Office or the assignee of the entire interest under 37 CFR 3.73(b).

Currently, no records are found under the name Susanne M. Hopkins in the U.S. Patent and Trademark Office (USPTO) database. In the request, pursuant to 37 CFR § 1.28(c) filed December 8, 2010, Ms. Hopkins also gives a registration number that is not associated with her name.

Further correspondence with respect to this matter should be addressed as follows:

By Mail: Mail Stop PETITIONS
Commissioner for Patents
Post Office Box 1450
Alexandria, VA 22313-1450

By hand: U.S. Patent and Trademark Office
Customer Service Window, Mail Stop Petitions
Randolph Building
401 Dulany Street
Alexandria, VA 22314

By fax: (571) 273-8300
ATTN: Office of Petitions

Telephone inquiries concerning this decision should be directed to the undersigned at (571) 272-7751.

Joan Olszewski

Joan Olszewski
Petitions Examiner
Office of Petitions

UNITED STATES PATENT AND TRADEMARK OFFICE

Commissioner for Patents
United States Patent and Trademark Office
P.O. Box 1450
Alexandria, VA 22313-1450
www.uspto.gov

THE NATH LAW GROUP
112 SOUTH WEST STREET
ALEXANDRIA VA 22314

MAILED
FEB 24 2011
OFFICE OF PETITIONS

In re Patent No. 6,940,611	:	
Issued: September 6, 2005	:	
Application No. 10/692,678	:	ON PETITION
Filed: October 27, 2003	:	
Attorney Docket No. 25582A	:	

This is a notice regarding your renewed request for acceptance of a fee deficiency submission under 37 CFR 1.28 filed February 15, 2011.

On September 1, 1998, the Court of Appeals for the Federal Circuit held that 37 CFR 1.28(c) is the sole provision governing the time for correction of the erroneous payment of the issue fee as a small entity. **See DH Technology v. Synergystex International, Inc. 154 F.3d 1333, 47 USPQ2d 1865 (Fed. Cir. Sept. 1, 1998).**

The Office no longer investigates or rejects original or reissue applications under 37 CFR 1.56. **1098 Off. Gaz. Pat. Office 502 (January 3, 1989)**. Therefore, nothing in this Notice is intended to imply that an investigation was done.

Your fee deficiency submission under 37 CFR 1.28 is hereby **ACCEPTED**.

This patent is no longer entitled to small entity status. Accordingly, all future fees paid in this patent must be paid at the large entity rate.

Telephone inquires concerning this decision should be directed to the undersigned at (571) 272-7751.

Joan Olszewski
Petitions Examiner
Office of Petitions

UNITED STATES PATENT AND TRADEMARK OFFICE

Commissioner for Patents
United States Patent and Trademark Office
P.O. Box 1450
Alexandria, VA 22313-1450
www.uspto.gov

MINTZ, LEVIN, COHN, FERRIS, GLOVSKY AND POPEO, P.C
ONE FINANCIAL CENTER
BOSTON MA 02111

MAILED

MAR 21 2012

OFFICE OF PETITIONS

In re Application of	:
Stuart B. Levy et al.	: DECISION ON APPLICATION
Application No. 10/692,764	:FOR PATENT TERM ADJUSTMENT
Filed: October 23, 2004	:
Attorney Docket No. 16534-539001US	:

This is a decision on the "APPLICATION FOR ADJUSTMENT OF PATENT TERM UNDER 37 C.F.R. § 1.705(b)", filed March 7, 2012. Applicants request that the patent term adjustment at the time of the mailing of the Notice of Allowance be corrected from 638 days to 821 days.

The application for patent term adjustment is **GRANTED**.

The Office has updated the PAIR screen to reflect that the correct Patent Term Adjustment (PTA) determination at the time of the mailing of the Notice of Allowance is EIGHT HUNDRED TWENTY-ONE (821) days. A copy of the updated PAIR screen, showing the correct determination, is enclosed.

On December 8, 2011, the Office mailed the Determination of Patent Term Adjustment under 35 U.S.C. 154(b) in the above-identified application. The Notice stated that the patent term adjustment (PTA) to date is 638 days. The instant application for patent term adjustment was timely filed[1]. Applicants dispute the reduction of 183 days of PTA for applicant delay in filing an Information Disclosure Statements (IDS) on September 10, 2010 and September 14, 2011 after the filing of a response to Office Actions on April 2, 2010 and August 23, 2011."Applicants believe that the Office incorrectly attributed 183 days of delay to Applicants under 37 C.F.R. § 1.704. Specifically, Applicants' Supplemental Information Disclosure Statements filed September 10, 2010 and September 14, 2011 both included a statement under 37 C.F.R. § 1.704(d)."

A review of the record reveals that on April 2, 2010 applicants filed a response to the Final Office action mailed December 18, 2009. Then on September 10, 2010, applicants filed an Information Disclosure Statement (IDS). A review of the record also reveals that on August 23, 2011 applicants filed a response to the non-Final Office action mailed May 23, 2011. Then on September 14, 2011, applicants filed an Information Disclosure Statement (IDS). Pursuant to 37 CFR § 1.704(c)(8), the

[1] PALM records indicate that the Issue Fee was also received on March 7, 2012.

submission of a supplemental reply or other paper, other than a supplemental reply or other paper expressly requested by the examiner, after a reply has been filed, is a failure to engage in reasonable efforts to conclude prosecution. The record does not support a conclusion that the IDS was expressly requested by the examiner. Accordingly, filing of the IDS may be considered a failure to engage and a proper basis for reduction.

However, the record supports a conclusion that the IDS was received May 24, 2011 with a 37 CFR 1.704(d) statement.

> 37 CFR 1.704(d) provides that a paper containing only an information disclosure statement in compliance with 37 CFR 1.97 and 1.98 will not be considered (result in a reduction) under 37 CFR 1.704(c)(6), 1.704(c)(8), 1.704(c)(9), or 1.704(c)(10) if it is accompanied by a statement that each item of information contained in the information disclosure statement was first cited in any communication from a foreign patent office in a counterpart application and that this communication was not received by any individual designated in 37 CFR 1.56(c) more than thirty days prior to the filing of the information disclosure statement. This provision will permit applicants to submit information first cited in a communication from a foreign patent office in a counterpart application to the Office without a reduction in patent term adjustment if an information disclosure statement is promptly (within thirty days of receipt of the first communication) submitted to the Office. Compliance with the statement requirement of 37 CFR 1.704(d) does not substitute for compliance with any relevant requirement of 37 CFR 1.97 or 1.98. 37 CFR 1.704(d) also provides that this thirty-day period is not extendableeply was expressly requested by the examiner, within the meaning of § 1.704(c)(8). Accordingly, no reduction is warranted.

In view thereof, no reduction should have been taken for the filing of the IDS' after the mailing of the response to the Final Office Action on April 2, 2010 and to the non-Final Office Action on August 23, 2011.

Receipt of the $200.00 fee set forth in 37 CFR 1.18(e) is acknowledged. No additional fees are required.

The application is being forwarded to the Office of Data Management for issuance of the patent. The patent term adjustment indicated on the patent (as shown on the Issue Notification mailed about three weeks prior to patent issuance) will include any additional adjustment accrued both for Office delay in issuing the patent more than four months after payment of the issue fee and satisfaction of all outstanding requirements, and for the Office taking in excess of three years to issue the patent (to the extent that the three-year period does not overlap with periods already accorded).

Telephone inquiries specific to this decision should be directed to the undersigned at (571) 272-3212.

Patricia Faison-Ball

Patricia Faison-Ball
Senior Petitions Attorney
Office of Petitions

Enclosure: Copy of Revised PALM Screen

Patent Term Adjustments

PTA/PTE Information | Patent Term Adjustment | Patent Term Extension

Application Number*: 10692764 Search | Explanation of PTA Calculation | Explanation of PTE Calculation

PTA Calculations for Application: 10692764

Application Filing Date	10/24/2003	OverLapping Days Between (A and B) or (A and C)	0
Issue Date of Patent		Non-Overlapping USPTO Delays:	1050
A Delays	1050	PTO Manual Adjustment	183
B Delays	0	Applicant Delay (APPL)	412
C Delays	0	Total PTA (days)	821

* - Sorted Column

File Contents History

Action Number	Action Recorded Date	Action Due Date	Action Code	Action Description	Duration PTO	Duration APPL	Parent Action Number
106	03/19/2012		P028	Adjustment of PTA Calculation by PTO	22		0
105	03/19/2012		P028	Adjustment of PTA Calculation by PTO	161		0
94	12/08/2011		MN/=.	Mail Notice of Allowance			0
93	12/05/2011		OAR	Office Action Review			0
92	12/05/2011		IREV	Issue Revision Completed			0
91	12/05/2011		DVER	Document Verification			0
90	12/05/2011		N/=.	Notice of Allowance Data Verification Completed			0
89	12/05/2011		DOCK	Case Docketed to Examiner in GAU			0
88	12/04/2011		CNTA	Allowability Notice			0
86	11/03/2011		P574	PARALEGAL OR ELECTRONIC TERMINAL DISCLAIMER APPROVED			0
84	09/30/2011		FWDX	Date Forwarded to Examiner			0
87	09/14/2011		IDSC	Information Disclosure Statement considered			0
82	09/14/2011	08/23/2011	M844	Information Disclosure Statement (IDS) Filed		22	83
81	09/14/2011		WIDS	Information Disclosure Statement (IDS) Filed			0
85	08/23/2011		DIST	Terminal Disclaimer Filed			0
83	08/23/2011		A...	Response after Non-Final Action			0
80	05/23/2011	08/02/2010	MCTNF	Mail Non-Final Rejection	294		70
79	05/23/2011		OAR	Office Action Review			0
78	05/20/2011		CTNF	Non-Final Rejection			0
77	09/10/2010		IDSC	Information Disclosure Statement considered			0
75	09/10/2010	04/02/2010	M844	Information Disclosure Statement (IDS) Filed		161	70
74	09/10/2010		WIDS	Information Disclosure Statement (IDS) Filed			0
72	04/06/2010		FWDX	Date Forwarded to Examiner			0
69	04/06/2010		ABN9	Disposal for a RCE / CPA / R129			0
76	04/02/2010		IDSC	Information Disclosure Statement considered			0
71	04/02/2010		AMSB	Amendment Submitted/Entered with Filing of CPA/RCE			0
70	04/02/2010	03/22/2010	RCEX	Request for Continued Examination (RCE)		11	60
68	04/02/2010		XT/G	Request for Extension of Time - Granted			0
67	04/02/2010		M844	Information Disclosure Statement (IDS) Filed			0
66	04/02/2010		WIDS	Information Disclosure Statement (IDS) Filed			0
65	04/02/2010		BRCE	Workflow - Request for RCE - Begin			0
64	03/11/2010		MCTAV	Mail Advisory Action (PTOL - 303)			0
63	03/10/2010		CTAV	Advisory Action (PTOL-303)			0
62	02/25/2010		FWDX	Date Forwarded to Examiner			0
61	02/22/2010		A.NE	Amendment after Final Rejection			0
60	12/22/2009		MCTFR	Mail Final Rejection (PTOL - 326)			0
59	12/18/2009		CTFR	Final Rejection			0
56	10/16/2009		FWDX	Date Forwarded to Examiner			0
58	09/08/2009		IDSC	Information Disclosure Statement considered			0
57	09/08/2009	09/08/2009	M844	Information Disclosure Statement (IDS) Filed			55
55	09/08/2009	08/06/2009	A...	Response after Non-Final Action		33	52
54	09/08/2009		XT/G	Request for Extension of Time - Granted			0
53	09/08/2009		WIDS	Information Disclosure Statement (IDS) Filed			0
52	05/06/2009		MCTNF	Mail Non-Final Rejection			0
51	05/05/2009		CTNF	Non-Final Rejection			0
49	03/10/2009		FWDX	Date Forwarded to Examiner			0
47	03/10/2009		FWDX	Date Forwarded to Examiner			0
45	03/10/2009		ABN9	Disposal for a RCE / CPA / R129			0
48	03/03/2009		AMSB	Amendment Submitted/Entered with Filing of CPA/RCE			0
46	03/03/2009	09/04/2008	RCEX	Request for Continued Examination (RCE)			39
44	03/03/2009		XT/G	Request for Extension of Time - Granted			0
43	03/03/2009		BRCE	Workflow - Request for RCE - Begin			0
41	10/23/2008		PA..	Change in Power of Attorney (May Include Associate POA)			0
40	10/16/2008		C.AD	Correspondence Address Change			0
39	09/04/2008	06/04/2008	N/AP	Notice of Appeal Filed		92	36

38	09/04/2008		XT/G	Request for Extension of Time - Granted			0
37	03/31/2008		DOCK	Case Docketed to Examiner in GAU			0
36	03/04/2008		MCTFR	Mail Final Rejection (PTOL - 326)			0
35	02/19/2008		CTFR	Final Rejection			0
32	11/19/2007		FWDX	Date Forwarded to Examiner			0
31	11/05/2007	08/04/2007	A...	Response after Non-Final Action		93	28
30	11/05/2007		XT/G	Request for Extension of Time - Granted			0
29	09/05/2007		C.ADB	Correspondence Address Change			0
28	05/04/2007		MCTNF	Mail Non-Final Rejection			0
27	04/30/2007		CTNF	Non-Final Rejection			0
25	03/09/2007		FWDX	Date Forwarded to Examiner			0
24	02/20/2007		ELC.	Response to Election / Restriction Filed			0
23	01/19/2007	12/24/2004	MCTRS	Mail Restriction Requirement	756		0.5
22	01/08/2007		CTRS	Restriction/Election Requirement			0
21	01/05/2007		DOCK	Case Docketed to Examiner in GAU			0
20	11/24/2006		DOCK	Case Docketed to Examiner in GAU			0
26	06/08/2006		IDSC	Information Disclosure Statement considered			0
19	06/08/2006		RCAP	Reference capture on IDS			0
18.7	06/08/2006		M844	Information Disclosure Statement (IDS) Filed			0
18	06/08/2006		WIDS	Information Disclosure Statement (IDS) Filed			0
17	05/02/2006		DOCK	Case Docketed to Examiner in GAU			0
16	10/28/2004		DOCK	Case Docketed to Examiner in GAU			0
15	06/22/2004		TSSCOMP	IFW TSS Processing by Tech Center Complete			0
14	06/22/2004		DOCK	Case Docketed to Examiner in GAU			0
13	05/03/2004		WROIPE	Application Return from OIPE			0
12	05/03/2004		ROIPE	Application Return TO OIPE			0
11	05/03/2004		OIPE	Application Dispatched from OIPE			0
10	05/03/2004		COMP	Application Is Now Complete			0
9	04/22/2004		ADDFLFEE	Additional Application Filing Fees			0
8	04/22/2004		OATHDECL	A statement by one or more inventors satisfying the requirement under 35 USC 115, Oath of the Applic			0
7	02/20/2004		INCD	Notice Mailed--Application Incomplete--Filing Date Assigned			0
6	01/28/2004		L128	Cleared by L&R (LARS)			0
5	01/22/2004		L126	Auto Referred by PALM Pre Exam			0
4	01/16/2004		L194	Cleared by OIPE CSR			0
3	01/16/2004		CLSS	CASE CLASSIFIED BY OIPE			0
2	12/09/2003		SCAN	IFW Scan & PACR Auto Security Review			0
1	10/24/2003		IEXX	Initial Exam Team nn			0
0.5	10/24/2003		EFILE	Filing date			0

Export to: Excel

UNITED STATES PATENT AND TRADEMARK OFFICE

Commissioner for Patents
United States Patent and Trademark Office
P.O. Box 1450
Alexandria, VA 22313-1450
www.uspto.gov

QUALCOMM INCORPORATED
5775 MOREHOUSE DR.
SAN DIEGO, CA 92121

MAILED

APR 04 2011

OFFICE OF PETITIONS

In re Application of
J. Rodney Walton et al
Application No. 10/692,833
Filed: October 23, 2003
Attorney Docket No. 030060

ON PETITION

This is a decision on the petitions filed March 31, 2011 under 37 CFR 1.137(b), to revive the above-identified application and under 37 CFR 1.313(c)(2) to withdraw the above-identified application from issue after payment of the issue fee.

The petition under 37 CFR 1.137(b) is **GRANTED.**

The petition satisfies the conditions for revival pursuant to the provisions of 37 CFR 1.137(b) in that (1) the reply in the form of payment of the Issue fee; (2) the petition fee; (3) the required statement of unintentional delay have been received. Accordingly, the issue fee is accepted as having been unintentionally delayed.

The petition under 37 CFR 1.313(c)(2) is **GRANTED.**

The above-identified application is withdrawn from issue for consideration of a submission under 37 CFR 1.114 (request for continued examination). See 37 CFR 1.313(c)(2).

Petitioner is advised that the issue fee paid on March 31, 2011 in the above-identified application cannot be refunded. If, however, the above-identified application is again allowed, petitioner may request that it be applied towards the issue fee required by the new Notice of Allowance.[1]

Telephone inquiries should be directed to Irvin Dingle at (571) 272-3210.

This matter is being referred to Technology Center AU 2618 for processing of the request for continued examination under 37 CFR 1.114 and for consideration of the Information Disclosure Statement.

/Irvin Dingle/
Irvin Dingle
Petitions Examiner
Office of Petitions

[1] The request to apply the issue fee to the new Notice may be satisfied by completing and returning the new Issue Fee Transmittal Form PTOL-85(b), which includes the following language thereon: Commissioner for Patents is requested to apply the Issue Fee and Publication Fee (if any) or re-apply any previously paid issue fee to the application identified above. Petitioner is advised that, whether a fee is indicated as being due or not, the Issue Fee Transmittal Form **must** be completed and timely submitted to avoid abandonment. Note the language in bold text on the first page of the Notice of Allowance and Fee(s) Due (PTOL-85).

SPE RESPONSE FOR CERTIFICATE OF CORRECTION

Paper No.:

DATE : 8/9/2011

TO SPE OF : ART UNIT 1628

SUBJECT : Request for Certificate of Correction on Patent No.: US 7.049,316

A response is requested with respect to the accompanying request for a certificate of correction.

Please complete this form and return with file, within **7** days to:
Certificates of Correction Branch - ST (South Tower) 9A22
Palm location **7590** - Tel. No. (703) 305-8309

With respect to the change(s) requested, correcting Office and/or Applicant's errors, should the patent read as shown in the certificate of correction? No new matter should be introduced, nor should the scope or meaning of the claims be changed.

Thank You For Your Assistance **Certificates of Correction Branch**

The request for issuing the above-identified correction(s) is hereby:

Note your decision on the appropriated box.

- [X] **Approved** All changes apply.
- [ ] **Approved in Part** Specify below which changes **do not** apply.
- [ ] **Denied** State the reasons for denial below.

Comments:

The certificate of correction dated 5/18/2010 has been approved.

R.S.

/Brandon J. Fetterolf/
SPE AU 1628

PATENT APPLICATION

IN THE UNITED STATES PATENT AND TRADEMARK OFFICE

In re application of
Robert Yongxin ZHAO, et al.

Docket No: A8671
Group Art Unit: 1626

Appln. No.: 10/692,856

Examiner: Rei Tsang Shiao

Confirmation No.: 9247

Patent No.: 7,049,316

Filed: October 27, 2003

Issue Date: May 23, 2006

For: PRODRUGS OF CC-1065 ANALOGS

REQUEST FOR CERTIFICATE OF CORRECTION

ATTN: Certificate of Correction Branch
Commissioner for Patents
P.O. Box 1450
Alexandria, VA 22313-1450

/Rei Tsang Shiao/

Entered
8/9/2011

Sir:

Pursuant to the provisions of 37 C.F.R. § 1.323, please enter the attached Certificate of Correction. Applicants found a minor mistake in claim 1. Applicants seek to make correction by means of this Request for Certificate of Correction.

Applicants request correction to more clearly specify that group R_7 of formula (I) in claim 1 is not itself a piperazino carbamate or a 4-piperidino-piperidino carbamate, but forms such together with the adjacent O atom in the formula, which would be appreciated immediately by the skilled person according to Fig. 3 of the present patent.

Since the errors noted are believed to be the Applicant's responsibility, the USPTO is directed and authorized to charge the statutory fee of $100.00 and all required fees, except for the Issue Fee and the Publication Fee, to Deposit Account No. 19-4880. Please also credit any overpayments to said Deposit Account.

In view of the foregoing, issuance of the Certificate of Correction is respectfully requested.

Respectfully submitted,

Yan Lan
Registration No. 50,214

SUGHRUE MION, PLLC
Telephone: (650) 625-8100
Facsimile: (650) 625-8110

WASHINGTON OFFICE
23373
CUSTOMER NUMBER

Date: May 18, 2010

UNITED STATES PATENT AND TRADEMARK OFFICE

CERTIFICATE OF CORRECTION

PATENT NO: 7,049,316

DATED: May 23, 2006

INVENTOR(S): Robert Yongxin ZHAO

Ravi V.J. CHARI

It is certified that error appears in the above-identified patent and that said Letters Patent is hereby corrected as shown below:

In claim 1 at column 20, line 52:

delete "R_7 is" and insert

-- R_7 together with the adjacent O atom in the formula (I) forms --

MAILING ADDRESS OF SENDER:
SUGHRUE MION, PLLC
WASHINGTON OFFICE
23373
CUSTOMER NUMBER

SPE RESPONSE FOR CERTIFICATE OF CORRECTION

Paper No.: _____

DATE : 5/26/10

TO SPE OF : ART UNIT 1626 (1600)

SUBJECT : Request for Certificate of Correction for Appl. No.: 10/692,856 Patent No.: 7,043,316

Please respond to this request for a certificate of correction within 7 days.

FOR IFW FILES:

Please review the requested changes/corrections as shown in the **COCIN** document(s) in the IFW application image. No new matter should be introduced, nor should the scope or meaning of the claims be changed.

Please complete the response (see below) and forward the completed response to scanning using document code **COCX**.

FOR PAPER FILES:

Please review the requested changes/corrections as shown in the attached certificate of correction. Please complete this form (see below) and forward it with the file to:

Certificates of Correction Branch (CofC)
Randolph Square – 9D10-A
Palm Location 7580

Ernest C. White, LTE
Randolph Sq. Ste 9D62A
703-756-1590

Thank You For Your Assistance

The request for issuing the above-identified correction(s) is hereby:

Note your decision on the appropriate box.

- [x] **Approved** — All changes apply.
- [ ] **Approved in Part** — Specify below which changes **do not** apply.
- [ ] **Denied** — State the reasons for denial below.

JOSEPH K. McKANE
SUPERVISORY PATENT EXAMINER
TECHNOLOGY CENTER 1600

1626

SPE _____ ART UNIT _____

UNITED STATES PATENT AND TRADEMARK OFFICE

Commissioner for Patents
United States Patent and Trademark Office
P.O. Box 1450
Alexandria, VA 22313-1450
www.uspto.gov

MCANDREWS HELD & MALLOY, LTD
500 WEST MADISON STREET
SUITE 3400
CHICAGO IL 60661

MAILED

OCT 20 2010

OFFICE OF PETITIONS

In re Patent of Pande	:	DECISION ON REQUEST
Patent No. 7,668,983	:	FOR RECONSIDERATION OF
Issue Date: February 23, 2010	:	PATENT TERM ADJUSTMENT
Application No. 10/692,957	:	and
Filed: October 24, 2003	:	NOTICE OF INTENT TO ISSUE
Docket No. 14920US01	:	CERTIFICATE OF CORRECTION

This is a decision on the petition filed on June 10, 2010, which is being treated as a petition requesting that the patent term adjustment indicated on the above-identified patent be corrected to indicate that the term of the above-identified patent is extended or adjusted by three hundred thirty-seven (337) days.

The petition to correct the patent term adjustment indicated on the above-identified patent to indicate that the term of the above-identified patent is extended or adjusted by three hundred thirty-seven (337) days is **granted to the extent indicated herein.**

Patentee argues the Office miscalculated the period of "B delay" pursuant to 37 CFR 1.702(b).

The Office does not concur with patentee's assertion that the period of B delay is 43 days. The period of B delay in this case is 61 days. Unless a Request for Continued Examination ("RCE") is filed, the period of B Delay ends of the date the patent issues. In this case, a RCE was filed September 23, 2009. Per 35 U.S.C. § 154(b)(1)(B)(i), B Delay does not include "any time consumed by continued examination of the application requested by the applicant under section 132(b)." The maximum period of B Delay in this case is 1064 days, which is the number of days beginning on October 25, 2006, the day after the date three years after the application's filing date, and ending on September 22, 2009, the day before the date the RCE was filed.

In addition, patentee's determination fails to exclude the correct number of days consumed by appellate review. As stated

in 35 U.S.C. 154(b)(1)(B)(ii), B delay does not include "any time consumed by appellate review by the Board of Patent Appeals and Interferences." In this instance the appellate period begins on October 5, 2006, when the Notice of Appeal was filed, and ends on July 23, 2009, the date the Board mailed a decision. Thus, only a portion of the appellate period occurred during the B delay period. The period of B delay does not include the 1003 day period beginning on October 25, 2006, the first day overlapping with the period of B delay that occurred after the date the Notice of Appeal was filed, and ending on July 23, 2009, the date the Board mailed a decision. Excluding the 1003 days consumed by appellate review results in a period of B delay of 61 days (1064 - 1003).

In light thereof, the patent term adjustment is 355 days, which is the sum of 355 days of delay under 35 U.S.C. 154(b)(1)(A) and 61 days of B Delay, reduced by 61 days of Applicant delay.

The Office will *sua sponte* issue a certificate of correction. Pursuant to 37 CFR 1.322, the Office will not issue a certificate of correction without first providing assignee or patentee an opportunity to be heard. Accordingly, patentee is given **one (1) month or thirty (30) days**, whichever is longer, from the mail date of this decision to respond. No extensions of time will be granted under § 1.136.

Nothing in this decision shall be construed as a waiver of the requirement of 35 U.S.C. 154(b)(4) that any civil action by an applicant dissatisfied with a determination made by the Director under 35 U.S.C. 154(b)(3) be filed in the United States District Court for the District of Columbia within 180 days after the grant of the patent.

The Office acknowledges submission of the $200.00 fee set forth in 37 CFR 1.18(e). No additional fees are required.

The application is being forwarded to the Certificates of Branch for issuance of a certificate of correction. The Office will issue a certificate of correction indicating that the term of the above-identified patent is extended or adjusted **by three hundred fifty-five (355)** days.

Telephone inquiries specific to this matter should be directed to the undersigned at (571) 272-3230.

Shirene Willis Brantley

Shirene Willis Brantley
Senior Petitions Attorney
Office of Petitions

Enclosure: Copy of DRAFT Certificate of Correction

UNITED STATES PATENT AND TRADEMARK OFFICE

CERTIFICATE OF CORRECTION

PATENT : 7,668,983 B2

DATED : **February 23, 2010** **DRAFT**

INVENTOR(S) : Pande

It is certified that error appears in the above-identified patent and that said Letters Patent is hereby corrected as shown below:

On the cover page,

[*] Notice: Subject to any disclaimer, the term of this patent is extended or adjusted under 35 U.S.C. 154(b) by 1004 days

Delete the phrase "by 1004 days" and insert – by 355 days--

UNITED STATES PATENT AND TRADEMARK OFFICE

Commissioner for Patents
United States Patent and Trademark Office
P.O. Box 1450
Alexandria, VA 22313-1450
www.uspto.gov

LEE & HAYES, PLLC
601 W. RIVERSIDE AVENUE
SUITE 1400
SPOKANE, WA 99201

MAILED

OCT 01 2010

OFFICE OF PETITIONS

In re Application of :
Galen C. Hunt, et al. :
Application No.: 10/693,004 : ON PETITION
Filed: October 24, 2003 :
Attorney Docket No.: MS1-1776US :

This is a decision on the petition, filed September 30, 2010, under 37 CFR 1.313(c)(2) to withdraw the above-identified application from issue after payment of the issue fee.

The petition is **GRANTED**.

The above-identified application is withdrawn from issue for consideration of a submission under 37 CFR 1.114 (request for continued examination). See 37 CFR 1.313(c)(2).

Petitioner is advised that the issue fee paid on August 27, 2010, cannot be refunded. If, however, this application is again allowed, petitioner may request that it be applied towards the issue fee required by the new Notice of Allowance.[1]

Telephone inquiries relating to this decision should be directed to the undersigned at (571) 272-3204.

The application is being referred to Technology Center AU 2167 for further processing of the request for continued examination under 37 CFR 1.114 and for consideration of the concurrently filed Information Disclosure Statement (IDS).

/SDB/

Sherry D. Brinkley
Petitions Examiner
Office of Petitions

[1] *The request to apply the issue fee to the new Notice may be satisfied by completing and returning the new Part B – Fee(s) Transmittal Form (along with any balance due at the time of submission). Petitioner is advised that the Issue Fee Transmittal Form must be completed and timely submitted to avoid abandonment of the application.*

UNITED STATES PATENT AND TRADEMARK OFFICE

Commissioner for Patents
United States Patent and Trademark Office
P.O. Box 1450
Alexandria, VA 22313-1450
www.uspto.gov

MAILED

OCT 07 2010

OFFICE OF PETITIONS

FOLEY & LARDNER LLP
150 EAST GILMAN STREET
P.O. BOX 1497
MADISON WI 53701-1497

In re Application of	:	
LA GESSE et al.	:	
Application No. 10/693,051	:	DECISION ON APPLICATION
Filed: 10/24/2003	:	FOR
Atty Docket No. 088245-2592	:	PATENT TERM ADJUSTMENT

This is a decision on the "REQUEST TO CORRECT PATENT TERM ADJUSTMENT" filed March 18, 2010. Applicants request that the initial determination of patent term adjustment under 35 U.S.C. 154(b) be corrected to six hundred eighty-eight (688) days.

The application for patent term adjustment is **GRANTED**.

The Office has updated the PALM and PAIR screens to reflect that the corrected Patent Term Adjustment (PTA) determination at the time of the mailing of the Notice of Allowance is six hundred eighty-eight (688) days. A copy of the updated PAIR screen, showing the corrected determination, is enclosed.

A review of the application history confirms that applicants' characterization of the basis for and amounts of the adjustments and reductions of patent term in this application at the time of the mailing of the notice of allowance are correct.

In view thereof, the corrected determination of patent term adjustment at the time of the mailing of the notice of allowance is six hundred eighty-eight (688) days.

Applicants are reminded that any delays by the Office pursuant to 37 CFR 1.702(a)(4) and 1.702(b) and any applicant delays under 37 CFR 1.704(c)(10) will be calculated at the time of the issuance of the patent and applicants will be notified in the Issue Notification letter that is mailed to applicants approximately three weeks prior to issuance.

The Office of Data Management has been advised of this decision. This matter is being referred to the Office of Data Management for issuance of the patent.

Telephone inquiries specific to this matter should be directed to the undersigned at (571) 272-3211.

C. T. Donnell

Christina Tartera Donnell
Senior Petitions Attorney
Office of Petitions

Enclosure: Copy of REVISED PAIR Screen

Patent Term Adjustments

Patent Term Adjustment (PTA) for Application Number: 10/693,051

Filing or 371(c) Date:	10-24-2003	Overlapping Days Between {A and B} or {A and C}:	0
Issue Date of Patent:	-	Non-Overlapping USPTO Delays:	871
A Delays:	871	PTO Manual Adjustments:	-181
B Delays:	0	Applicant Delays:	2
C Delays:	0	Total PTA Adjustments:	688

Patent Term Adjustment History **Explanation Of Calculations**

Number	Date	Contents Description	PTO (Days)	APPL (Days)	Start
90	10-06-2010	Adjustment of PTA Calculation by PTO		87	0
89	10-06-2010	Adjustment of PTA Calculation by PTO		87	0
88	10-06-2010	Adjustment of PTA Calculation by PTO	87		0
87	10-06-2010	Adjustment of PTA Calculation by PTO		94	0
75	02-19-2010	Mail Notice of Allowance			0
74	02-18-2010	Issue Revision Completed			0
73	02-18-2010	Document Verification			0
72	02-16-2010	Notice of Allowance Data Verification Completed			0
71	02-16-2010	Examiner's Amendment Communication			0
70	02-16-2010	Notice of Allowability			0
67	01-31-2010	Date Forwarded to Examiner			0
66	01-27-2010	RCE- AF Processed			0
65	01-27-2010	Request for Continued Examination (RCE)			0
64	01-31-2010	Disposal for a RCE / CPA / R129			0
63	01-27-2010	Workflow - Request for RCE - Begin			0
62	01-15-2010	Mail Advisory Action (PTOL - 303)			0
61	01-15-2010	Advisory Action (PTOL-303)			0
60	01-06-2010	Date Forwarded to Examiner			0

59	12-29-2009	Amendment after Final Rejection		0
58	10-27-2009	Mail Final Rejection (PTOL - 326)	8	54
57	10-26-2009	Final Rejection		0
55	08-13-2009	Date Forwarded to Examiner		0
54	06-19-2009	Response after Non-Final Action		0
53	03-19-2009	Mail Non-Final Rejection	87	39
52	03-16-2009	Non-Final Rejection		0
51	02-11-2009	Change in Power of Attorney (May Include Associate POA)		0
50	02-10-2009	Correspondence Address Change		0
49	01-07-2009	Date Forwarded to Examiner		0
48	01-05-2009	Amendment Submitted/Entered with Filing of CPA/RCE		0
47	01-07-2009	Date Forwarded to Examiner		0
46	01-05-2008	Request for Continued Examination (RCE)		0
45	01-07-2009	Disposal for a RCE / CPA / R129		0
44	01-05-2008	Request for Extension of Time - Granted		0
43	01-05-2009	Workflow - Request for RCE - Begin		0
42	12-08-2008	Mail Advisory Action (PTOL - 303)		0
41	11-21-2008	Advisory Action (PTOL-303)		0
40	09-04-2008	Date Forwarded to Examiner		0
39	08-22-2008	Amendment after Final Rejection		0
38	07-03-2008	Mail Final Rejection (PTOL - 326)		0
37	07-02-2008	Final Rejection		0
36	04-22-2008	Date Forwarded to Examiner		0
35	03-31-2008	Response after Non-Final Action		0
34	01-09-2008	Mail Non-Final Rejection		0

33	01-07-2008	Non-Final Rejection			0
32	10-24-2007	Date Forwarded to Examiner			0
31	10-15-2007	Amendment Submitted/Entered with Filing of CPA/RCE			0
30	10-24-2007	Date Forwarded to Examiner			0
29	10-15-2007	Request for Continued Examination (RCE)		2	26
28	10-24-2007	Disposal for a RCE / CPA / R129			0
27	10-15-2007	Workflow - Request for RCE - Begin			0
26	07-13-2007	Mail Final Rejection (PTOL - 326)			0
25	07-06-2007	Final Rejection			0
24	05-07-2007	Date Forwarded to Examiner			0
23	05-04-2007	Response after Non-Final Action			0
22	02-08-2007	Mail Non-Final Rejection	776		-1
21	02-05-2007	Non-Final Rejection			0
20	01-09-2007	Case Docketed to Examiner in GAU			0
19	12-05-2006	Miscellaneous Incoming Letter			0
18	12-18-2006	Correspondence Address Change			0
17	12-18-2006	Change in Power of Attorney (May Include Associate POA)			0
16	08-15-2006	Case Docketed to Examiner in GAU			0
15	08-15-2006	Case Docketed to Examiner in GAU			0
14	08-15-2006	Case Docketed to Examiner in GAU			0
13	10-29-2005	Case Docketed to Examiner in GAU			0
12	09-30-2005	IFW TSS Processing by Tech Center Complete			0
11	08-29-2005	Correspondence Address Change			0
9	01-26-2004	Application Is Now Complete			0
8	01-23-	Application Return from OIPE			0

	2004		
7	01-23-2004	Application Return TO OIPE	0
6	01-23-2004	Application Dispatched from OIPE	0
5	01-23-2004	Application Is Now Complete	0
4	01-16-2004	CASE CLASSIFIED BY OIPE	0
3	01-16-2004	Cleared by OIPE CSR	0
2	12-10-2003	IFW Scan & PACR Auto Security Review	0
1	10-24-2003	Initial Exam Team nn	0

Close Window

SPE RESPONSE FOR CERTIFICATE OF CORRECTION

Paper No.: _____

DATE : 04/01/11

TO SPE OF : ART UNIT: 2191 Attn: ZHEN WEI Y (SPE)

SUBJECT : Request for Certificate of Correction for Appl. No.: 10/693051 Patent No.: 7836445

C of C Mailroom date: 03/23/11

Please respond to this request for a certificate of correction within 7 days.

FOR IFW FILES:

Please review the requested changes/corrections as shown in the **COCIN** document(s) in the IFW application image. No new matter should be introduced, nor should the scope or meaning of the claims be changed.

Please complete the response (see below) and forward the completed response to scanning using document code **COCX**.

FOR PAPER FILES:

Please review the requested changes/corrections as shown in the attached certificate of correction. Please complete this form (see below) and forward it with the file to:

Certificates of Correction Branch (CofC)
Randolph Square – 9D10-A
Palm Location 7580

Tasneem Siddiqui
Certificates of Correction Branch
703-756-1593 or 703-756-1814

Thank You For Your Assistance

The request for issuing the above-identified correction(s) is hereby:
Note your decision on the appropriate box.

- ☒ **Approved** — **All** changes apply.
- ☐ **Approved in Part** — Specify below which changes **do not** apply.
- ☐ **Denied** — State the reasons for denial below.

Comments: _____

W. Y. WEI ZHEN — **SPE**

2191 — **Art Unit**

UNITED STATES PATENT AND TRADEMARK OFFICE

COMMISSIONER FOR PATENTS
UNITED STATES PATENT AND TRADEMARK OFFICE
P.O. BOX 1450
ALEXANDRIA, VA 22313-1450
WWW.USPTO.GOV

Paper No.

MOSER, PATTERSON & SHERIDAN LLP/
SEAGATE TECHNOLOGY LLC
595 SHREWSBURY AVENUE
SUITE 100
SHREWSBURY NJ 07702

MAILED
DEC 06 2010
OFFICE OF PETITIONS

In re Application of	:	
Kennedy et al.	:	
Application No. 10/693,141	:	DECISION ON PETITION
Filing Date: April 26, 2004	:	UNDER 37 C.F.R. § 1.182
Attorney Docket No.: SEA 2853.1	:	
Title: SINGLE PIECE HUB WITH	:	
INTEGRAL UPPER AND LOWER FEMALE	:	
CONES AND METHOD FOR MAKING THE	:	
SAME	:	

This is a decision on the petition pursuant to 37 C.F.R. § 1.182, filed May 12, 2010, to accept an unintentionally delayed claim under 35 U.S.C. § 120 for the benefit of priority to the prior-filed U.S. application (09/498,700) set forth in the benefit claim contained within this petition.

A petition pursuant to 37 C.F.R. § 1.182 is required, as this application is abandoned. A petition pursuant to C.F.R. § 1.78(a)(3) is not required, as the Office recognized the benefit claim on filing. See filing receipt mailed May 6, 2004 and MPEP § 201.11(III)(D).[1]

The petition is **DISMISSED**.

With this petition, Petitioner has included the petition fee and an amendment to the specification which contains a benefit claim.

1 "[T]he Office will not require a petition under 37 CFR 1.78(a) and the surcharge under 37 CFR 1.17(t) to correct the claim if the information concerning the claim was recognized by the Office as shown by its inclusion on the filing receipt."

This benefit claim cannot be accepted however, as it contains erroneous information: application no. 09/498,700 was filed on February 7, 2000, whereas the benefit claim submitted with this petition contains a filing date of October 23, 2003 for application no. 09/498,700.

The time period for filing a renewed petition is governed by 37 C.F.R. § 1.181(f). Therefore, if reconsideration of this decision is desired, any response to this decision must be submitted within **TWO MONTHS** from the mail date of this decision, and **extensions of time under 37 C.F.R. § 1.136(a) are not permitted.** The reply should include a cover letter entitled "Renewed Petition pursuant to 37 C.F.R. § 1.182." This is not a final agency action within the meaning of 5 U.S.C § 704.

Petitioner may wish to consider filing an amendment to the specification that contains a benefit claim that contains the correct filing date for prior-filed application 09/498,700.

The renewed petition should indicate in a prominent manner that the attorney handling this matter is Paul Shanoski, and may be submitted by mail[2], hand-delivery[3], or facsimile[4]. Registered users of EFS-Web may alternatively submit a response to this decision via EFS-Web[5].

If responding by mail, Petitioner is advised not to place the undersigned's name on the envelope. Only the information that appears in the footnote should be included - adding anything else to the address will delay the delivery of the response to the undersigned.

The general phone number for the Office of Petitions that should be used for status requests is (571) 272-3282. Telephone inquiries regarding this decision should be directed to the undersigned at (571) 272-3225.

It is noted that the address listed on the petition differs from the address of record. The application file does not indicate a change of correspondence address has been filed in this case, although the address given on the petition differs from the address of record. If Petitioner desires to receive future correspondence regarding this application, the change of

2 Mail Stop Petition, Commissioner for Patents, United States Patent and Trademark Office, P.O. Box 1450, Alexandria, VA, 22313-1450.
3 Customer Window, Randolph Building, 401 Dulaney Street, Alexandria, VA, 22314.
4 (571) 273-8300- please note this is a central facsimile number.
5 https://sportal.uspto.gov/authenticate/authenticateuserlocalepf.html

correspondence address must be submitted. A courtesy copy of this decision will be mailed to Petitioner. However, all future correspondence will be directed to the address of record until such time as appropriate instructions are received to the contrary. Petitioner will not receive future correspondence related to this application unless Change of Correspondence Address, Patent Form (PTO/SB/122) is submitted for the above-identified application. For Petitioner's convenience, a blank Change of Correspondence Address, Patent Form (PTO/SB/122), may be found at http://www.uspto.gov/web/forms/sb0122.pdf.

/Paul Shanoski/
Paul Shanoski
Senior Attorney
Office of Petitions

cc: SEAGATE TECHNOLOGY LLC
INTELLECTUAL PROPERTY DEPT. - COL2LGL
389 DISC DRIVE
LONGMONT, CO 80503

UNITED STATES PATENT AND TRADEMARK OFFICE

Commissioner for Patents
United States Patent and Trademark Office
P.O. Box 1450
Alexandria, VA 22313-1450
www.uspto.gov

KILPATRICK TOWNSEND & STOCKTON LLP
TWO EMBARCADERO CENTER
EIGHTH FLOOR
SAN FRANCISCO CA 94111-3834

MAILED
AUG 04 2011
OFFICE OF PETITIONS

In re Patent No. 7,303,645 :
Issue Date: December 4, 2007 :
Application No. 10/693,323 : NOTICE
Filed: October 24, 2003 :
Attorney Docket No. 021713-000300US

This is a notice regarding your request for acceptance of a fee deficiency submission under 37 CFR 1.28. On September 1, 1998, the Court of Appeals for the Federal Circuit held that 37 CFR 1.28(c) is the sole provision governing the time for correction of the erroneous payment of the issue fee as a small entity. **See DH Technology v. Synergystex International, Inc. 154 F.3d 1333, 47 USPQ2d 1865 (Fed. Cir. Sept. 1, 1998).**

The Office no longer investigates or rejects original or reissue applications under 37 CFR 1.56. **1098 Off. Gaz. Pat. Office 502 (January 3, 1989)**. Therefore, nothing in this Notice is intended to imply that an investigation was done.

Your fee deficiency submission under 37 CFR 1.28 is hereby **ACCEPTED**.

The file does not indicate a change of address has been submitted, although the address given on the petition differs from the address of record. If appropriate, a change of address should be filed in accordance with MPEP 601.03. A courtesy copy of this decision is being mailed to the address given on the petition; however, the Office will mail all future correspondence solely to the address of record.

Inquiries related to this communication should be directed to Irvin Dingle at (571) 272-3210.

Irvin Dingle
Petitions Examiner
Office of Petitions

cc: Kendal M. Sheets
Authorized Representative
CPA Global
2318 Mill Road, Suite 12 Floor
Alexandria, VA 22314

UNITED STATES PATENT AND TRADEMARK OFFICE

UNITED STATES DEPARTMENT OF COMMERCE
United States Patent and Trademark Office
Address: COMMISSIONER FOR PATENTS
P.O. Box 1450
Alexandria, Virginia 22313-1450
www.uspto.gov

APPLICATION NO.	FILING DATE	FIRST NAMED INVENTOR	ATTORNEY DOCKET NO.	CONFIRMATION NO.
10/693,362	10/24/2003	Ashish Shah	14917.0552USI1	2600

27488 7590 08/01/2011
MERCHANT & GOULD (MICROSOFT)
P.O. BOX 2903
MINNEAPOLIS, MN 55402-0903

EXAMINER
FEARER, MARK D

ART UNIT	PAPER NUMBER
2443	

MAIL DATE	DELIVERY MODE
08/01/2011	PAPER

Please find below and/or attached an Office communication concerning this application or proceeding.

The time period for reply, if any, is set in the attached communication.

UNITED STATES PATENT AND TRADEMARK OFFICE

COMMISSIONER FOR PATENTS
UNITED STATES PATENT AND TRADEMARK OFFICE
P.O. BOX 1450
ALEXANDRIA, VA 22313-1450
www.uspto.gov

MERCHANT & GOULD (MICROSOFT)
P.O. BOX 2903
MINNEAPOLIS MN 55402-0903

In re Application of: SHAH, Ashish Application No. 10/24/2003 Filed: Oct 24, 2003 Docket No. 14917.0552US11 Title: SYSTEMS AND METHODS FOR THE IMPLEMENTATION OF A SYNCHRONIZATION SCHEMAS FOR UNITS OF INFORMATION MANAGEABLE BY A HARDWARE/SOFTWARE INTERFACE SYSTEM	))))))))	**DECISION ON PETITION FOR EXPUNGING INFORMATION UNDER UNDER 37 CFR § 1.59**

This is a decision on the renew petition under 37 CFR § 1.59(b), filed on 14 July 2011, to expunge information from the above identified application.

The petition is **GRANTED**.

Petitioner requests that the information submitted on 11 Dec 2007, be expunged from the record. Petitioner states that the information cited contains trade secrets and/or proprietary material which has not been made public. The petition fee set forth in 37 CFR 1.17(g) has been paid.

The information in question has been determined by the undersigned to not be material to the examination of the instant application.

Applicant is required to retain the expunged material(s) for the life of any patent which issues on the above-identified application.

The expunged material has been destroyed, the artifact folder closed and therefore the material will not be returned.

Any inquiry regarding this decision should be directed the undersigned whose telephone number is (571) 272-4147.

If attempts to reach the undersigned by telephone are unsuccessful, Beatriz Prieto, Quality Assurance Specialist, can be reached at (571) 272-3902.

/Kim Huynh/

Kim Huynh,
Quality Assurance Specialist
Technology Center 2400
Network, Multiplexing, Cable and Security

UNITED STATES PATENT AND TRADEMARK OFFICE

Commissioner for Patents
United States Patent and Trademark Office
P.O. Box 1450
Alexandria, VA 22313-1450
www.uspto.gov

MAILED

SEP 12 2011

OFFICE OF PETITIONS

MERCHANT & GOULD (MICROSOFT)
P.O. BOX 2903
MINNEAPOLIS MN 55402-0903

In re Application of	:	
Ashish Shah	:	
Application No. 10/693,362	:	DECISION GRANTING PETITION
Filed: October 24, 2003	:	UNDER 37 CFR 1.313(c)(2)
Attorney Docket No. 14917.0552US11	:	

This is a decision on the petition under 37 CFR 1.313(c)(2), filed September 9, 2011, to withdraw the above-identified application from issue after payment of the issue fee.

The petition is **GRANTED**.

The above-identified application is withdrawn from issue for consideration of a submission under 37 CFR 1.114 (request for continued examination). *See* 37 CFR 1.313(c)(2).

Petitioner is advised that the issue fee paid on July 14, 2011 cannot be refunded. If, however, this application is again allowed, petitioner may request that it be applied towards the issue fee required by the new Notice of Allowance.[1]

Telephone inquiries should be directed to the undersigned at (571) 272-3208.

This application is being referred to Technology Center AU 2443 for processing of the request for continued examination under 37 CFR 1.114 and for consideration of the concurrently filed IDS.

/Karen Creasy/
Karen Creasy
Petitions Examiner
Office of Petitions

[1] *The request to apply the issue fee to the new Notice may be satisfied by completing and returning the new Part B – Fee(s) Transmittal Form (along with any balance due at the time of submission). Petitioner is advised that the Issue Fee Transmittal Form* ***must*** *be completed and timely submitted to avoid abandonment of the application.*

UNITED STATES PATENT AND TRADEMARK OFFICE

Commissioner for Patents
United States Patent and Trademark Office
P.O. Box 1450
Alexandria, VA 22313-1450
www.uspto.gov

PFIZER INC.
PATENT DEPARTMENT
Bld 114 M/S 9114
EASTERN POINT ROAD
GROTON CT 06340

MAILED

FEB 01 2011

OFFICE OF PETITIONS

In re Application of	:	
Shalaby W. Shalaby et al.	:	
Application No. 10/693,383	:	ON PETITION
Filed: October 24, 2003	:	
Attorney Docket No. PC25203A	:	

This is a decision on the petition under the unintentional provisions of 37 CFR 1.137(b), filed June 17, 2009, to revive the above-identified application.

The petition is **GRANTED**.

The application became abandoned for failure to reply in a timely manner to the final Office action mailed, October 30, 2008, which set a shortened statutory period for reply of three (3) months. No extensions of time under the provisions of 37 CFR 1.136(a) were obtained. Accordingly, the application became abandoned on January 31, 2009. A Notice of Abandonment was mailed on May 18, 2009.

The petition satisfies the requirements of 37 CFR 1.137(b) in that petitioner has supplied (1) the reply in the form of a continuing application under 37 CFR 1.53(b), (2) the petition fee of $1,620 and (3) a proper statement of unintentional delay. Accordingly, the filing of a continuing application under 37 CFR 1.53(b) is accepted as being unintentionally delayed.

The application is being revived solely for purposes of continuity. As continuity has been established by this decision reviving the application, the application is again abandoned in favor of a continuing application under 37 CFR 1.53(b).

It is not apparent whether the person signing the statement of unintentional delay was in a position to have firsthand or direct knowledge of the facts and circumstances of the delay at issue. Nevertheless, such statement is being treated as having been made as the result of a reasonable inquiry into the facts and circumstances of such delay. See 37 CFR 10.18(b) and Changes to Patent Practice and Procedure; Final Rule Notice, 62 Fed. Reg. 53131, 53178 (October 10, 1997), 1203 Off. Gaz. Pat. Office 63, 103 (October 21, 1997). In the event that such an inquiry has not been made, petitioner must make such an inquiry. If such inquiry results in the discovery that it is not correct that the entire delay in filing the required reply from the due date for the reply until the filing of a grantable petition pursuant to 37 CFR 1.137(b) was unintentional, petitioner must notify the Office.

Telephone inquiries concerning this decision should be directed to Kimberly Inabinet at (571) 272-4618.

/Kimberly Inabinet/

Kimberly Inabinet
Petitions Examiner
Office of Petitions

UNITED STATES PATENT AND TRADEMARK OFFICE

COMMISSIONER FOR PATENTS
UNITED STATES PATENT AND TRADEMARK OFFICE
P.O. BOX 1450
ALEXANDRIA, VA 22313-1450
www.uspto.gov

Nelson Mullins Riley
Floor 30, Suite 3000
One Post Office Square
Boston MA 02109-2127

MAILED
AUG 25 2011
OFFICE OF PETITIONS

In re Patent No. 7,531,174	:
Sanicola-Nadel et al.	: DECISION UPON REMAND AND
Issue Date: May 12, 2009	: RECONSIDERATION OF
Application No. 10/693,538	: PATENT TERM ADJUSTMENT
Filed: October 23, 2003	: AND NOTICE OF INTENT
Attorney Docket No. BGG-A117CNRCE2	: TO ISSUE CERTIFICATE OF CORRECTION
Title: Cripto Blocking Antibodies and Uses thereof	:

This is a decision following remand from the District Court for the District of Columbia regarding the patent term adjustment indicated on the above-identified patent. The Court remanded this matter to the U.S. Patent and Trademark Office for recalculation of the patent term adjustment in accordance with the decision in Wyeth & Elan Pharma Int'l Ltd. v. Kappos, 591 F.3d 1364 (Fed. Cir. 2010).

The patent term adjustment indicated on the above-identified patent has been recalculated as directed by the Court. The term of the above-identified patent is extended or adjusted by five hundred and thirty-one (531) days.

The application is being forwarded to the Certificates Branch for issuance of a certificate of correction indicating that the term of the above-identified patent is extended or adjusted by five hundred and thirty-one (531) days.

Telephone inquiries specific to this matter should be directed to Senior Legal Advisor, Kery A. Fries at (571) 272-7757.

/Kery A. Fries/

Kery A. Fries

Senior Legal Advisor Attorney
Office of Patent Legal Administration
Office of Associate Commissioner
For Patent Examination Policy

Enclosure: Copy of DRAFT Certificate of Correction

UNITED STATES PATENT AND TRADEMARK OFFICE

CERTIFICATE OF CORRECTION

PATENT : 7,531,174 B2

DATED : May 12, 2009 **DRAFT**

INVENTOR(S) : Sanicola-Nadel et al.

It is certified that error appears in the above-identified patent and that said Letters Patent is hereby corrected as shown below:

On the cover page,

[*] Notice: Subject to any disclaimer, the term of this patent is extended or adjusted under 35 USC 154(b) by 233 days

Delete the phrase "by 233 days" and insert – by 531 days--

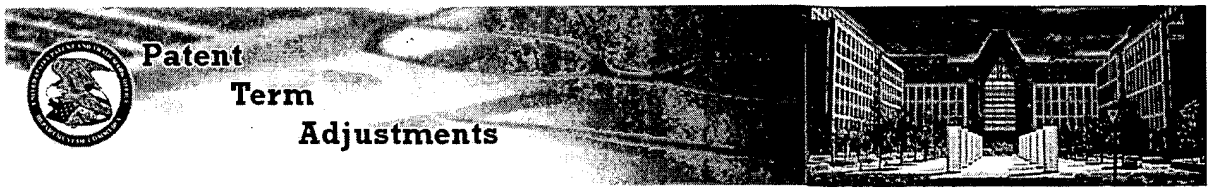

PTA/PTE Information Patent Term Adjustment Patent Term Extension

Application Number*: 10693538 Search Explanation of PTA Calculation Explanation of PTE Calculation

PTA Calculations for Application: 10693538

Application Filing Date	10/23/2003	OverLapping Days Between (A and B) or (A and C)	0
Issue Date of Patent	05/12/2009	Non-Overlapping USPTO Delays:	404
A Delays	322	PTO Manual Adjustment	298
B Delays	82	Applicant Delay (APPL)	171
C Delays	0	Total PTA (days)	531

* - Sorted Column

File Contents History

Action Number	Action Recorded Date	Action Due Date	Action Code	Action Description	Duration PTO	Duration APPL	Parent Action Number
134	08/17/2011		P028	Adjustment of PTA Calculation by PTO	298		0
130	09/01/2009		P026	Record a Petition Decision of Granted for Patent Term Adjustment after Issue			0
128	08/31/2009		P028	Adjustment of PTA Calculation by PTO	82		0
127	08/31/2009		P028	Adjustment of PTA Calculation by PTO		59	0
122	07/27/2009		P026	Record a Petition Decision of Granted for Patent Term Adjustment after Issue			0
121	07/23/2009		P028	Adjustment of PTA Calculation by PTO	59		0
120	07/23/2009		P028	Adjustment of PTA Calculation by PTO		82	0
115	05/12/2009	04/19/2009	PTAC	Patent Issue Date Used in PTA Calculation	23		107
115.5	04/22/2009	10/23/2006	PTA36M	PTA 36 Months	82		0
114	03/31/2009		EFDC	Export to Final Data Capture			0
113	03/30/2009		D1935	Dispatch to FDC			0
112	03/25/2009		MPTDI	Mail-Petition Decision - Dismissed			0
111	03/25/2009		PTDI	Petition Decision - Dismissed			0
108	12/23/2008		PILS	Application Is Considered Ready for Issue			0
110	12/19/2008		PET.	Petition Entered			0
107	12/19/2008		N084	Issue Fee Payment Verified			0
106	12/19/2008		IFEE	Issue Fee Payment Received			0
105	12/12/2008		CRFT	Sequence Forwarded to Pubs on Tape			0
104	12/01/2008		EIDC	Export to Initial Data Capture			0
102	11/26/2008		MN/=.	Mail Notice of Allowance			0
101	11/24/2008		IREV	Issue Revision Completed			0
100	11/24/2008		DVER	Document Verification			0
99	11/24/2008		EX.A	Examiner's Amendment Communication			0
98	11/24/2008		N/=.	Notice of Allowance Data Verification Completed			0
97	11/20/2008		CNTA	Allowability Notice			0
92	10/01/2008		FWDX	Date Forwarded to Examiner			0
91	08/26/2008		A...	Response after Non-Final Action			0
90	06/16/2008		MCTNF	Mail Non-Final Rejection			0
89	06/11/2008		CTNF	Non-Final Rejection			0
87	06/10/2008		DOCK	Case Docketed to Examiner in GAU			0
84	06/04/2008		FWDX	Date Forwarded to Examiner			0
82	06/04/2008		ABN9	Disposal for a RCE / CPA / R129			0
81	06/04/2008		DOCK	Case Docketed to Examiner in GAU			0
88	05/27/2008		IDSC	Information Disclosure Statement considered			0
86	05/27/2008		RCAP	Reference capture on IDS			0
85	05/27/2008		M844	Information Disclosure Statement (IDS) Filed			0
83	05/27/2008	05/25/2008	RCEX	Request for Continued Examination (RCE)		2	76
80	05/27/2008		WIDS	Information Disclosure Statement (IDS) Filed			0
79	05/27/2008		BRCE	Workflow - Request for RCE - Begin			0
78	03/10/2008		CRFT	Sequence Forwarded to Pubs on Tape			0
77	02/29/2008		EIDC	Export to Initial Data Capture			0
76	02/25/2008		MN/=.	Mail Notice of Allowance			0
75	02/25/2008		MEX.A	Mail Examiner's Amendment			0
74	02/21/2008		IREV	Issue Revision Completed			0
73	02/21/2008		N/=.	Notice of Allowance Data Verification Completed			0
72	01/31/2008		ACRE	Allowed Case Returned to the Examiner for Clerical Processing			0
71	01/31/2008		DVER	Document Verification			0
70	01/18/2008		EX.A	Examiner's Amendment Communication			0
69	01/18/2008		CNTA	Allowability Notice			0
65	11/19/2007		FWDX	Date Forwarded to Examiner			0
63	11/19/2007		ABN9	Disposal for a RCE / CPA / R129			0
57	11/13/2007		C.ADB	Correspondence Address Change			0
68	11/08/2007		IDSC	Information Disclosure Statement considered			0
64	11/08/2007		RCEX	Request for Continued Examination (RCE)			0

62	11/08/2007		LET.	Miscellaneous Incoming Letter			0
61	11/08/2007		RCAP	Reference capture on IDS			0
60	11/08/2007		M844	Information Disclosure Statement (IDS) Filed			0
59	11/08/2007		WIDS	Information Disclosure Statement (IDS) Filed			0
58	11/08/2007		BRCE	Workflow - Request for RCE - Begin			0
56	09/07/2007		FIDC	Finished Initial Data Capture			0
55	09/05/2007		C.ADB	Correspondence Address Change			0
54	08/17/2007		CRFT	Sequence Forwarded to Pubs on Tape			0
53	08/10/2007		EIDC	Export to Initial Data Capture			0
52	08/09/2007		MN/=.	Mail Notice of Allowance			0
51	08/09/2007		MEX.A	Mail Examiner's Amendment			0
50	08/06/2007		IREV	Issue Revision Completed			0
49	08/06/2007		N/=.	Notice of Allowance Data Verification Completed			0
48	08/06/2007		DOCK	Case Docketed to Examiner in GAU			0
47	07/23/2007		ACRE	Allowed Case Returned to the Examiner for Clerical Processing			0
46	07/23/2007		DVER	Document Verification			0
45	07/19/2007		EX.A	Examiner's Amendment Communication			0
44	07/19/2007		CNTA	Allowability Notice			0
43	05/16/2007		FWDX	Date Forwarded to Examiner			0
42	05/01/2007	02/01/2007	A...	Response after Non-Final Action		89	40
41	05/01/2007		XT/G	Request for Extension of Time - Granted			0
40	11/01/2006		MCTNF	Mail Non-Final Rejection			0
39	10/30/2006		CTNF	Non-Final Rejection			0
37	08/30/2006		FWDX	Date Forwarded to Examiner			0
36	08/16/2006	06/16/2006	A...	Response after Non-Final Action		61	31
35	08/16/2006		XT/G	Request for Extension of Time - Granted			0
34	08/16/2006		AF/D	Affidavit(s) (Rule 131 or 132) or Exhibit(s) Received			0
38	07/27/2006		IDSC	Information Disclosure Statement considered			0
33	07/27/2006		RCAP	Reference capture on IDS			0
32.7	07/27/2006		M844	Information Disclosure Statement (IDS) Filed			0
32	07/27/2006		WIDS	Information Disclosure Statement (IDS) Filed			0
31	03/16/2006		MCTNF	Mail Non-Final Rejection			0
30	03/06/2006		CTNF	Non-Final Rejection			0
29	02/06/2006		IDSC	Information Disclosure Statement considered			0
28	02/06/2006		RCAP	Reference capture on IDS			0
27.7	02/06/2006	01/18/2006	M844	Information Disclosure Statement (IDS) Filed		19	25
27	02/06/2006		WIDS	Information Disclosure Statement (IDS) Filed			0
26	01/31/2006		FWDX	Date Forwarded to Examiner			0
25	01/18/2006		ELC.	Response to Election / Restriction Filed			0
24	01/18/2006		XT/G	Request for Extension of Time - Granted			0
23	10/18/2005	12/23/2004	MCTRS	Mail Restriction Requirement	299		-1
22	10/17/2005		CTRS	Restriction/Election Requirement			0
21	06/28/2005		DOCK	Case Docketed to Examiner in GAU			0
20	04/11/2005		DOCK	Case Docketed to Examiner in GAU			0
19	12/01/2004		TSSCOMP	IFW TSS Processing by Tech Center Complete			0
18	12/01/2004		DOCK	Case Docketed to Examiner in GAU			0
17	04/23/2004		WROIPE	Application Return from OIPE			0
16	04/23/2004		ROIPE	Application Return TO OIPE			0
14	04/23/2004		COMP	Application Is Now Complete			0
15	04/22/2004		OIPE	Application Dispatched from OIPE			0
13	04/07/2004		ADDFLFEE	Additional Application Filing Fees			0
11	04/07/2004		OATHDECL	A statement by one or more inventors satisfying the requirement under 35 USC 115, Oath of the Applic			0
10	03/12/2004		INCD	Notice Mailed--Application Incomplete--Filing Date Assigned			0
8	01/20/2004		L128	Cleared by L&R (LARS)			0
7	01/20/2004		L128	Cleared by L&R (LARS)			0
6	01/15/2004		L198	Referred to Level 2 (LARS) by OIPE CSR			0
5	01/15/2004		CLSS	CASE CLASSIFIED BY OIPE			0
4	12/12/2003		SCAN	IFW Scan & PACR Auto Security Review			0
3	11/12/2003		CRFE	CRF Is Good Technically / Entered into Database			0
12	10/23/2003		CLAIM	Claim Preliminary Amendment			0
2	10/23/2003		CRFL	CRF Disk Has Been Received by Preexam / Group / PCT			0
1	10/23/2003		IEXX	Initial Exam Team nn			0

Export to: Excel

UNITED STATES PATENT AND TRADEMARK OFFICE

Commissioner for Patents
United States Patent and Trademark Office
P.O. Box 1450
Alexandria, VA 22313-1450
www.uspto.gov

DOCKET CLERK
P.O. DRAWER 800889
DALLAS TX 75380

MAILED

SEP 08 2010

OFFICE OF PETITIONS

In re Application of Rajkotia Application No. 10/693,753 Filed: October 24, 2003 Attorney Dkt. No. 2003.07.003.WS0 For: WIRELESS NETWORK USING SHARED TRAFFIC CHANNEL MODE OF OPERATION FOR BROADCAST SERVICES	ON APPLICATION FOR PATENT TERM ADJUSTMENT

This is in response to the "REQUEST FOR RECONSIDERATION OF PATENT TERM ADJUSTMENT UNDER 37 CFR 1.705(b)" filed February 9, 2010. Applicants request that the determination of patent term adjustment be corrected from eight hundred eighty-six (886) days as indicated on the Determination of Patent Term Adjustment to eight hundred forty-three (843) days.

As the instant application for patent term adjustment requests reconsideration of the patent term adjustment as it relates to the Office's failure to issue the patent within 3 years of the filing date, the application for patent term adjustment under 37 CFR 1.705(b) is **DISMISSED as PREMATURE**.

The Office acknowledges submission of the $200.00 fee set forth in 37 CFR 1.18(e) for consideration of the application for patent term adjustment under 37 CFR 1.705(b).

Knowledge of the actual date the patent issues is required to calculate the amount, if any, of additional patent term patentee is entitled to for Office failure to issue the patent within 3 years. See § 1.702(b). (This is true even where a request for continued examination (RCE) was filed). The computer will not undertake the § 1.702(b) calculation until the actual date of issuance of the patent has been determined. Likewise, the computer will not calculate any further Office delay under §

1.702(a)(4) or applicant delay under § 1.704(c)(10) until the actual date of issuance of the patent has been determined. As such, the Office cannot make a determination on the correctness of the patent term adjustment until the patent has issued.

Requesting reconsideration of the patent term adjustment to be indicated on the patent under 37 CFR 1.705(b) based on the initial determination of patent term adjustment and a projected issuance date of the patent (or even the filing date of the request for continued examination) is premature. Accordingly, it is appropriate to dismiss as premature such a request.

Rather than file an application for patent term adjustment under 37 CFR 1.705(b) contesting the 37 CFR 1.702(b) calculation at the time of the mailing of the notice of allowance, applicant is advised that they may wait until the time of the issuance of the patent and file a request for reconsideration of the patent term adjustment pursuant to 37 CFR 1.705(d). As the USPTO does not calculate the amount of time earned pursuant to 37 CFR 1.702(b) until the time of the issuance of the patent, the Office will consider any request for reconsideration of the patent term adjustment due to an error in the calculation of 37 CFR 1.702(b) to be timely if the request for reconsideration is filed within two months of the issuance of the patent. However, as to all other bases for contesting the initial determination of patent term adjustment received with the notice of allowance, applicant must timely file an application for patent term adjustment prior to the payment of the issue fee[1].

To the extent that applicant otherwise requests reconsideration of the patent term adjustment at the time of the mailing of the

---

[1] For example, if applicant disputes both the calculation of patent term adjustment under 37 CFR 1.702(a)(1) for Office failure to mail a first Office action or notice of allowance not later than fourteen months after the date on which the application was filed and under 37 CFR 1.702(b) for Office failure to issue a patent within three years of the actual filing date of the application, then applicant must still timely file an application for patent term adjustment prior to the payment of the issue fee to contest the calculation of Office delay in issuing a first Office action or notice of allowance. See 37 CFR 1.705(b) and 35 U.S.C. 154(b)(3)(B). A dispute as to the calculation of the §1.702(a)(1) period raised on request for reconsideration of patent term adjustment under 37 CFR 1.705(d) will be dismissed as untimely filed.

notice of allowance, the application for patent term adjustment is **GRANTED** to the extent indicated herein.

On November 9, 2009, the Office mailed the Determination of Patent Term Adjustment under 35 U.S.C. 154(b) in the above-identified application. The Notice stated that the patent term adjustment to date is 886 days. The instant application for patent term adjustment was timely filed on February 9, 2010.

Applicants dispute the 169 day reduction and instead contend that a 129 day reduction is required. Petitioner contends the 129 day reduction is based upon the day the application was held abandoned on May 17, 2009 until the date the petition under 37 CFR 1.181 was granted on September 23, 2009.

A review of the record shows that the holding of abandonment was withdrawn on September 23, 2009. The holding was withdrawn as it was established that a timely reply in the form of a request for continued examination (RCE) was mailed on February 11, 2009. As such a reduction is not required in this instance as the petition to withdraw the holding of abandonment was filed within two months from the mailing of the Notice of abandonment. As such the 169 reduction is not warranted and will be removed.

However, further review of the record shows that an additional reduction of 25 days is required for the submission of supplemental reply in the form of replacement drawings on April 10, 2007 pursuant to 37 CFR 1.704 (c)(8).

A review of the application history reveals that patentees should have been assessed a delay of twenty-five (25) days for the submission of the replacement drawings on April 10, 2007. 37 CFR 1.704(c) provides that:

> Circumstances that constitute a failure of the applicant to engage in reasonable efforts to conclude processing or examination of an application also include the following circumstances, which will result in the following reduction of the period of adjustment set forth in § 1.703 to the extent that the periods are not overlapping:
>
> (8) Submission of a supplemental reply or other paper, other than a supplemental reply or other paper expressly requested by the examiner, after a reply has been filed, in

which case the period of adjustment set forth in § 1.703 shall be reduced by the number of days, if any, beginning on the day after the date the initial reply was filed and ending on the date that the supplemental reply or other such paper was filed;

The 25 day delay is calculated beginning on March 17, 2007 the day after the submission of the amendment on March 16, 2007 and ends on April 10, 2007 the day the supplemental reply, in this instance the replacement drawings were submitted on April 10, 2007. A reduction of 25-days will be entered.

In view thereof, the correct determination of PTA at the time of the mailing of the notice of allowance is six **hundred eighty-nine (689)** (721 - 1 - 25- 2 - 4) days.

Any request for reconsideration of the patent term adjustment indicated on the patent must be timely filed within 2 months after issuance pursuant to 37 CFR 1.705(d) and **must** include payment of the required fee under 37 CFR 1.18(e).

The Office of Data Management has been advised of this decision. This application is being referred to the Office of Data Management for issuance of the patent.

Telephone inquiries specific to this matter should be directed to Petitions Attorney Charlema Grant at (571) 272-3215.

Anthony Knight
Director
Office of Petitions

Enclosure: Copy of REVISED PALM Screen

Patent Term Adjustments

PTA/PTE Information | Patent Term Adjustment | Patent Term Extension

Application Number*: 10693753 Search | Explanation of PTA Calculation | Explanation of PTE Calculation

PTA Calculations for Application: 10693753

Application Filing Date	10/24/2003	OverLapping Days Between (A and B) or (A and C)	0
Issue Date of Patent		Non-Overlapping USPTO Delays:	721
A Delays	721	PTO Manual Adjustment	144
B Delays	0	Applicant Delay (APPL)	176
C Delays	0	Total PTA (days)	689

* - Sorted Column

File Contents History

Action Number	Action Recorded Date	Action Due Date	Action Code	Action Description	Duration PTO	Duration APPL	Parent Action Number
99	09/07/2010		P028	Adjustment of PTA Calculation by PTO	144	0	
78	11/09/2009		MN/=.	Mail Notice of Allowance		0	
77	11/09/2009		MEX.A	Mail Examiner's Amendment		0	
76	11/05/2009		IREV	Issue Revision Completed		0	
75	11/05/2009		DVER	Document Verification		0	

74	11/05/2009		N/=.	Notice of Allowance Data Verification Completed		0
73	11/05/2009		EX.A	Examiner's Amendment Communication		0
72	11/05/2009		CNTA	Notice of Allowability		0
71	11/05/2009		FWDX	Date Forwarded to Examiner		0
69	11/05/2009		FWDX	Date Forwarded to Examiner		0
67	11/05/2009		ABN9	Disposal for a RCE / CPA / R129		0
57	09/26/2009		EML_NTR	Email Notification		0
56	09/23/2009		MPREV	Mail-Petition to Revive Application - Granted		0
55	09/22/2009		PREV	Petition to Revive Application - Granted		0
70	08/05/2009		AMPR	RCE- AF Processed		0
68	08/05/2009	02/17/2009	RCEX	Request for Continued Examination (RCE)	169	47
54	08/05/2009		PET.	Petition Entered		0
53	07/21/2009		MABN2	Mail Abandonment for Failure to Respond to Office Action		0
52	07/20/2009		ABN2	Aband. for Failure to Respond to O. A.		0
51	01/30/2009		MCTAV	Mail Advisory Action (PTOL - 303)		0
50	01/29/2009		CTAV	Advisory Action (PTOL-303)		0
49	01/26/2009		FWDX	Date Forwarded to Examiner		0
48	01/21/2009		A.NE	Amendment after Final Rejection		0
47	11/17/2008		MCTFR	Mail Final Rejection (PTOL - 326)		0
46	11/14/2008		CTFR	Final Rejection		0
45	10/17/2008		IRFND	Request for Refund		0
44	09/21/2008		FWDX	Date Forwarded to Examiner		0
43	07/18/2008	07/14/2008	A...	Response after Non-Final Action	4	41
42	07/18/2008		XT/G	Request for Extension of Time - Granted		0
41	04/14/2008		MCTNF	Mail Non-Final Rejection		0
40	04/11/2008		CTNF	Non-Final Rejection		0
38	02/07/2008		FWDX	Date Forwarded to Examiner		0
37	01/11/2008	01/09/2008	A...	Response after Non-Final Action	2	36
36	10/09/2007		MCTNF	Mail Non-Final Rejection		0
35	10/01/2007		CTNF	Non-Final Rejection		0
34	09/06/2007		FWDX	Date Forwarded to Examiner		0
32	09/06/2007		FWDX	Date Forwarded to Examiner		0
30	09/06/2007		ABN9	Disposal for a RCE / CPA / R129		0
33	08/31/2007		AMPR	RCE- AF Processed		0
31	08/31/2007		RCEX	Request for Continued Examination (RCE)		0
29	08/31/2007		BRCE	Workflow - Request for RCE - Begin		0

28	08/17/2007		MCTAV	Mail Advisory Action (PTOL - 303)			0
27	08/16/2007		CTAV	Advisory Action (PTOL-303)			0
26	08/13/2007		FWDX	Date Forwarded to Examiner			0
25	08/09/2007		A.NE	Amendment after Final Rejection			0
24	06/13/2007		MCTFR	Mail Final Rejection (PTOL - 326)			0
23	06/07/2007		CTFR	Final Rejection			0
22	04/10/2007		C614	New or Additional Drawing Filed			0
20	04/02/2007		FWDX	Date Forwarded to Examiner			0
21	03/16/2007		C614	New or Additional Drawing Filed			0
19	03/16/2007	03/15/2007	A...	Response after Non-Final Action		1	18
18	12/15/2006	12/24/2004	MCTNF	Mail Non-Final Rejection	721		-1
17	12/11/2006		CTNF	Non-Final Rejection			0
16	12/04/2006		DOCK	Case Docketed to Examiner in GAU			0
15	10/14/2006		DOCK	Case Docketed to Examiner in GAU			0
14	07/31/2006		DOCK	Case Docketed to Examiner in GAU			0
13	03/21/2006		DOCK	Case Docketed to Examiner in GAU			0
12	05/24/2004		TSSCOMP	IFW TSS Processing by Tech Center Complete			0
11	05/21/2004		DOCK	Case Docketed to Examiner in GAU			0
10	03/08/2004		CFRPT	Corrected filing receipt			0
9	01/28/2004		COMP	Application Is Now Complete			0
8	01/28/2004		WROIPE	Application Return from OIPE			0
7	01/28/2004		ROIPE	Application Return TO OIPE			0
5	01/28/2004		COMP	Application Is Now Complete			0
6	01/27/2004		OIPE	Application Dispatched from OIPE			0
4	01/16/2004		L194	Cleared by OIPE CSR			0
3	01/16/2004		CLSS	CASE CLASSIFIED BY OIPE			0
2	12/19/2003		SCAN	IFW Scan & PACR Auto Security Review			0
1	10/24/2003		IEXX	Initial Exam Team nn			0

Export to: Excel

SPE RESPONSE FOR CERTIFICATE OF CORRECTION

Paper No.: _____

DATE : November 4, 2010

TO SPE OF : ART UNIT 2886

SUBJECT : Request for Certificate of Correction for Appl. No.: 10/8693795 Patent No.: 7456945

Please respond to this request for a certificate of correction within 7 days.

FOR IFW FILES:

Please review the requested changes/corrections as shown in the **COCIN** document(s) in the IFW application image. No new matter should be introduced, nor should the scope or meaning of the claims be changed.

Please complete the response (see below) and forward the completed response to scanning using document code **COCX**.

FOR PAPER FILES:

Please review the requested changes/corrections as shown in the attached certificate of correction. Please complete this form (see below) and forward it with the file to:

Certificates of Correction Branch (CofC)
Randolph Square Building
2800 South Randolph Street
Arlington, VA 22206

Magdalene Talley

Certificates of Correction Branch
(571)272-0XXX

Thank You For Your Assistance

The request for issuing the above-identified correction(s) is hereby:
Note your decision on the appropriate box.

- ☑ **Approved** — **All** changes apply.
- ☐ **Approved in Part** — Specify below which changes **do not** apply.
- ☐ **Denied** — State the reasons for denial below.

Comments: _____

_____

_____

_____ **SPE** _____ **Art Unit** 2886

UNITED STATES
PATENT AND
TRADEMARK OFFICE

UNDER SECRETARY OF COMMERCE FOR INTELLECTUAL PROPERTY AND
DIRECTOR OF THE UNITED STATES PATENT AND TRADEMARK OFFICE
P.O. Box 1450
Alexandria, VA. 22313-1450
WWW.USPTO.GOV

WENDEROTH, LIND & PONACK, L.L.P.
2033 K STREET N. W. SUITE 800

WASHINGTON, DC 20006-1021

Date: August 25, 2011
Application No. 10/693,917
Filed: October 28, 2003
Subject: 2-OXO- 1-PYRROLIDINE DERIVATIVES, PROCESSES FOR PREPARING THEM AND THEIR USES

ON PETITION
37 CFR 1.324

Receipt is acknowledged of the petition filed on April 05, 2007 under 37 CFR 1.324 for correction of inventorship. The petition has been **GRANTED**.

In view of the papers filed, it has been found that during the prosecution of the instant application a restriction was required and therefore, not all of the inventors contributed to the invention as now claimed. Accordingly, this application has been changed by the **deletion of the inventor Edmond DIFFERDING, Philippe MICHEL, Patrice TALAGA and Alain MATAGNE. Now the inventorship of this application is Benoit KENDA, Patrick PASAU, and Benedicte LALLEMAND**. The application will be forwarded to the Office of Initial Patent Examination (OIPE) for issuance of a corrected filing receipt, and correction of the file jacket and PTO PALM data to reflect the inventorship as corrected.

Brandon Fetterolf /Brandon Fetterolf/
United States Patent and Trademark Office
Technology Center 1600
SPE, ART UNIT 1628
Remsen 5C09
571-272-2919

UNITED STATES
PATENT AND
TRADEMARK OFFICE

UNDER SECRETARY OF COMMERCE FOR INTELLECTUAL PROPERTY AND
DIRECTOR OF THE UNITED STATES PATENT AND TRADEMARK OFFICE
P.O. Box 1450
Alexandria, VA. 22313-1450
WWW.USPTO.GOV

WENDEROTH, LIND & PONACK, L.L.P.
2033 K STREET N. W. SUITE 800

WASHINGTON, DC 20006-1021

Date: August 25, 2011
Application No. 10/693,917
Filed: October 28, 2003
Subject: 2-OXO- 1-PYRROLIDINE DERIVATIVES, PROCESSES FOR PREPARING THEM AND THEIR USES

ON PETITION
37 CFR 1.324

Receipt is acknowledged of the petition filed on April 05, 2007 under 37 CFR 1.324 for correction of inventorship. The petition has been **GRANTED**.

In view of the papers filed, it has been found that during the prosecution of the instant application a restriction was required and therefore, not all of the inventors contributed to the invention as now claimed. Accordingly, this application has been changed by the **deletion of the inventor Edmond DIFFERDING, Philippe MICHEL, Patrice TALAGA and Alain MATAGNE. Now the inventorship of this application is Benoit KENDA, Patrick PASAU, and Benedicte LALLEMAND**. The application will be forwarded to the Office of Initial Patent Examination (OIPE) for issuance of a corrected filing receipt, and correction of the file jacket and PTO PALM data to reflect the inventorship as corrected.

Brandon Fetterolf /Brandon Fetterolf/
United States Patent and Trademark Office
Technology Center 1600
SPE, ART UNIT 1628
Remsen 5C09
571-272-2919

SPE RESPONSE FOR CERTIFICATE OF CORRECTION

DATE : April 11, 2010

TO SPE OF : ART UNIT 2824
SUBJECT : Request for Certificate of Correction for Appl. No /10/694165patent 7352606

Please respond to this request for a certificate of correction within 7 days.

FOR IFW FILES:

Please review the requested changes/corrections as shown in the **COCIN** document(s) in the IFW application image. No new matter should be introduced, nor should the scope or meaning of the claims be changed.

Please complete the response (see below) and forward the completed response to scanning using document code **COCX**.

FOR PAPER FILES:

Please review the requested changes/corrections as shown in the attached certificate of correction. Please complete this form (see below) and forward it with the file to:

Certificates of Correction Branch (CofC)
Randolph Square – 9D10-A
Palm Location 7580

Magdalene Talley

Certificates of Correction Branch
571-272-0423

Thank You For Your Assistance

The request for issuing the above-identified correction(s) is hereby:
Note your decision on the appropriate box.

- ☒ **Approved** — All changes apply.
- ☐ **Approved in Part** — Specify below which changes **do not** apply.
- ☐ **Denied** — State the reasons for denial below.

Comments:

/VanThu Nguyen/
for SPE Richard Elms
SPE

2824
Art Unit

UNITED STATES PATENT AND TRADEMARK OFFICE

Commissioner for Patents
United States Patent and Trademark Office
P.O. Box 1450
Alexandria, VA 22313-1450
www.uspto.gov

WAYNE A KEOWN
SUITE 1200
500 WEST CUMMINGS PARK
WOBURN MA 01801

MAILED
AUG 02 2010
OFFICE OF PETITIONS

In re Application of	:	
Kandimalla, et al.	:	
Application No. 10/694,207	:	ON REQUEST FOR
Filed: October 27, 2003	:	RECONSIDERATION OF
Attorney Docket Number: HYB-005US7	:	PATENT TERM ADJUSTMENT

This is a decision on the petition under 37 CFR 1.705(b), filed May 13, 2010. Applicants believe that they should be accorded an additional PTA of 641 days. Applicants request this correction solely on the basis that the Office will take in excess of three years to issue this patent.

As the instant application for patent term adjustment requests reconsideration of the patent term adjustment solely as it relates to the Office's failure to issue the patent within 3 years of the filing date, the application for patent term adjustment under 37 CFR 1.705(b) is **DISMISSED as PREMATURE**.

Knowledge of the actual date the patent issues is required to calculate the amount, if any, of additional patent term patentee is entitled to for Office failure to issue the patent within 3 years. See § 1.702(b). (This is true even where a request for continued examination (RCE) was filed). The computer will not undertake the § 1.702(b) calculation until the actual date of issuance of the patent has been determined. Likewise, the computer will not calculate any further Office delay under § 1.702(a)(4) or applicant delay under § 1.704(c)(10) until the actual date of issuance of the patent has been determined. As such, the Office can not make a determination on the correctness of the patent term adjustment until the patent has issued.

Requesting reconsideration of the patent term adjustment to be indicated on the patent under 37 CFR 1.705(b) based on the initial determination of patent term adjustment and a projected issuance date of the patent (or even the filing date of the request for continued examination) is premature. Accordingly, it is appropriate to dismiss as premature such a request.

Rather than file a request for reconsideration of patent term adjustment under 37 CFR 1.705(b) contesting the 37 CFR 1.702(b) calculation at the time of the mailing of the notice of allowance, applicants are advised that they may wait until the time of the issuance of the patent and file a request for reconsideration of the patent term adjustment pursuant to 37 CFR 1.705(d). As the USPTO does not calculate the amount of time earned pursuant to 37 CFR 1.702(b) until the time of the issuance of the patent, the Office will consider any request for reconsideration of the patent term adjustment due to an error in the calculation of 37 CFR 1.702(b) to be timely if the request for reconsideration is filed within two months of the issuance of the patent. However, as to all other bases for contesting the initial determination of patent term adjustment received with the notice of allowance, applicant must timely file an application for patent term adjustment prior to the payment of the issue fee[1].

Lastly, it is noted that Applicants point out that they should have been assessed Applicant delay of one hundred sixty-two (162) days. However, a review of the record in PALM confirms that the one hundred sixty-six (166) days accorded was properly assessed.

In view thereof, the correct determination of PTA at the time of the mailing of the Notice of Allowance is **four hundred fifty-four (454) days** (620 days of PTO delay, reduced by 166 days of Applicant delay).

Receipt of the $200.00 fee set forth in 37 CFR 1.18(e) is acknowledged.

The application is being forwarded to the Office of Data Management for issuance of the patent.

Telephone inquiries specific to this decision should be directed to Petitions Attorney Cliff Congo at (571) 272-3207.

Anthony Knight
Director
Office of Petitions

---

[1] For example, if applicant disputes both the calculation of patent term adjustment under 37 CFR 1.702(a)(1) for Office failure to mail a first Office action or notice of allowance not later than fourteen months after the date on which the application was filed and under 37 CFR 1.702(b) for Office failure to issue a patent within three years of the actual filing date of the application, then applicant must still timely file an application for patent term adjustment prior to the payment of the issue fee to contest the calculation of Office delay in issuing a first Office action or notice of allowance. See 37 CFR 1.705(b) and 35 U.S.C. 154(b)(3)(B). A dispute as to the calculation of the §1.702(a)(1) period raised on request for reconsideration of patent term adjustment under 37 CFR 1.705(d) will be dismissed as untimely filed.

UNITED STATES PATENT AND TRADEMARK OFFICE

Commissioner for Patents
United States Patent and Trademark Office
P.O. Box 1450
Alexandria, VA 22313-1450
www.uspto.gov

NIXON PEABODY LLP
300 S RIVERSIDE PLAZA 16TH FLOOR
CHICAGO IL 60606-6613

MAILED

SEP 2 0 2010

OFFICE OF PETITIONS

In re Application of	:	
Allen J. Brenneman	:	
Application No. 10/694,376	:	ON REQUEST FOR
Filed: October 27, 2003	:	RECONSIDERATION OF
Attorney Docket Number: MSE-2650	:	PATENT TERM ADJUSTMENT

This is a decision on the petition under 37 CFR 1.705(b), filed May 14, 2010. Applicant believes that he should be accorded an additional PTA of 456 days. Applicant requests this correction solely on the basis that the Office will take in excess of three years to issue this patent.

As the instant application for patent term adjustment requests reconsideration of the patent term adjustment solely as it relates to the Office's failure to issue the patent within 3 years of the filing date, the application for patent term adjustment under 37 CFR 1.705(b) is **DISMISSED as PREMATURE**.

Knowledge of the actual date the patent issues is required to calculate the amount, if any, of additional patent term patentee is entitled to for Office failure to issue the patent within 3 years. See § 1.702(b). (This is true even where a request for continued examination (RCE) was filed). The computer will not undertake the § 1.702(b) calculation until the actual date of issuance of the patent has been determined. Likewise, the computer will not calculate any further Office delay under § 1.702(a)(4) or applicant delay under § 1.704(c)(10) until the actual date of issuance of the patent has been determined. As such, the Office can not make a determination on the correctness of the patent term adjustment until the patent has issued.

Requesting reconsideration of the patent term adjustment to be indicated on the patent under 37 CFR 1.705(b) based on the initial determination of patent term adjustment and a projected issuance date of the patent (or even the filing date of the request for continued examination) is premature. Accordingly, it is appropriate to dismiss as premature such a request.

Rather than file a request for reconsideration of patent term adjustment under 37 CFR 1.705(b) contesting the 37 CFR 1.702(b) calculation at the time of the mailing of the notice of allowance, applicants are advised that they may wait until the time of the issuance of the patent and file a request for reconsideration of the patent term adjustment pursuant to 37 CFR 1.705(d). As the USPTO does not calculate the amount of time earned pursuant to 37 CFR 1.702(b) until the time of the issuance of the patent, the Office will consider any request for reconsideration of the patent term adjustment due to an error in the calculation of 37 CFR 1.702(b) to be timely if the request for reconsideration is filed within two months of the issuance of the patent. However, as to all other bases for contesting the initial determination of patent term adjustment received with the notice of allowance, applicant must timely file an application for patent term adjustment prior to the payment of the issue fee[1].

In view thereof, the correct determination of PTA prior to issuance is **seven hundred forty-three (743) days** (833 days of PTO delay, reduced by 90 days of Applicant delay).

Receipt of the $200.00 fee set forth in 37 CFR 1.18(e) is acknowledged.

The application is being forwarded to the Office of Data Management for issuance of the patent.

Telephone inquiries specific to this decision should be directed to Petitions Attorney Cliff Congo at (571) 272-3207.

Anthony Knight
Director
Office of Petitions

[1] For example, if applicant disputes both the calculation of patent term adjustment under 37 CFR 1.702(a)(1) for Office failure to mail a first Office action or notice of allowance not later than fourteen months after the date on which the application was filed and under 37 CFR 1.702(b) for Office failure to issue a patent within three years of the actual filing date of the application, then applicant must still timely file an application for patent term adjustment prior to the payment of the issue fee to contest the calculation of Office delay in issuing a first Office action or notice of allowance. See 37 CFR 1.705(b) and 35 U.S.C. 154(b)(3)(B). A dispute as to the calculation of the §1.702(a)(1) period raised on request for reconsideration of patent term adjustment under 37 CFR 1.705(d) will be dismissed as untimely filed.

UNITED STATES PATENT AND TRADEMARK OFFICE

Commissioner for Patents
United States Patent and Trademark Office
P.O. Box 1450
Alexandria, VA 22313-1450
www.uspto.gov

Date Mailed : 08/08/11

Patent No. : 7897658 B2
Inventor : **Nguyen**
Patent Issued : **March 01, 2011**
Docket No. : **03089**

Re: Request for Certificate of Correction

Consideration has been given your request for the issuance of a certificate of correction for the above-identified patent under the provisions of Rule(s) 1.322.

Inspection of the file of the application for the patent reveals that in column 14, line 1 is printed in accordance with the record (no fee or authorization to charge fee). **"Therefore, no correction(s) is in order here under United States Codes (U.S.C.) 254 and the Code of Federal Regulation (C.F.R.) 1322."**

In view of the foregoing, your request in this matter is hereby denied.

Lamonte M. Newsome
For Mary Diggs, Supervisor
Decisions & Certificates
Of Correction Branch
(571) 272-3421 or (703) 305-8309

Cabot Corporation/FM
Cabot Corporation, Law Department
157 Concord Road
Billerica MA 01821

Lmn

UNITED STATES PATENT AND TRADEMARK OFFICE

UNITED STATES DEPARTMENT OF COMMERCE
United States Patent and Trademark Office
Address: COMMISSIONER FOR PATENTS
P.O. Box 1450
Alexandria, Virginia 22313-1450
www.uspto.gov

APPLICATION NO.	FILING DATE	FIRST NAMED INVENTOR	ATTORNEY DOCKET NO.	CONFIRMATION NO.
10/694,986	10/29/2003	Masaharu Nagai	12732-0171001	5334

7590 10/15/2010
FISH & RICHARDSON P.C. (DC)
P.O. BOX 1022
MINNEAPOLIS, MN 55440-1022

EXAMINER
CHACKO DAVIS, DABORAH

ART UNIT	PAPER NUMBER
1795	

NOTIFICATION DATE	DELIVERY MODE
10/15/2010	ELECTRONIC

ACKNOWLEDGEMENT OF REQUEST

Notice of Allowance/Allowability Mailed

The request to print a color drawing reference as the first paragraph in the portion of the specification containing a brief description of the drawings as required by 37 CFR 1.84 and MPEP § 608.02 has been received by the United States Patent and Trademark Office and will be entered into the specification.

571-272-4200 or 1-888-786-0101
Application Assistance Unit
Office of Data Management

FORM PTOM327-5 (Rev. 02/08)

UNITED STATES PATENT AND TRADEMARK OFFICE

Commissioner for Patents
United States Patent and Trademark Office
P.O. Box 1450
Alexandria, VA 22313-1450
www.uspto.gov

October 13, 2010

FISH & RICHARDSON P.C. (DC)
P.O. BOX 1022
MINNEAPOLIS MN 55440-1022

In re Application of	:	
Masaharu Nagai, et al	:	**DECISION ON PETITION**
Application No. 10694986	:	
Filed: 10/29/2003	:	***ACCEPTANCE OF COLOR***
Attorney Docket No. **12732-0171001**	:	***DRAWINGS***

This is a decision on the Petition to Accept Color Drawings under 37 C.F.R 1.84 (a) (2), received in the United States Patent and Trademark Office (USPTO) October 29,2003.

The petition is **GRANTED**.

A grantable petition under 37 C.F.R. 1.84(a) (2) must be accompanied by the following.

1. The fee set forth under 37 C.F.R. 1.17(h),
2. Three (3) sets of the color drawings in question, or (1) set if filed via EFS, and
3. The specification containing the following language as the first paragraph in that portion of the specification relating to the brief description of the drawings.

   "The file of this patent contains at least one drawing executed in color. Copies of this patent with color drawing(s) will be provided by the Patent and Trademark Office upon request and payment of the necessary fee."

The petition was accompanied by all of the required fees and drawings. The specification contains the appropriate language. Therefore, the petition is GRANTED.

Telephone inquires relating to this decision may be directed to the undersigned in the Office of Data Management at 571-272-4200.

/Kimberly Terrell/
Manager
Office of Data Management
Publications Branch

UNITED STATES PATENT AND TRADEMARK OFFICE

Commissioner for Patents
United States Patent and Trademark Office
P.O. Box 1450
Alexandria, VA 22313-1450
www.uspto.gov

MCANDREWS HELD & MALLOY, LTD
500 WEST MADISON STREET
SUITE 3400
CHICAGO IL 60661

MAILED
SEP 20 2011
OFFICE OF PETITIONS

In re Application of :
Rodgers, et al. :DECISION ON APPLICATION
Application No.: 10/695,008 :FOR ADJUSTMENT
Filed: October 28, 2003 :PATENT TERM ADJUTSMENT
Attorney Docket No. **15128US02** :

This is in response to the "APPLICATION FOR RECONSIDERATION OF THE DETERMINATION OF PATENT TERM ADJUSTMENT UNDER 35 U.S.C. 154(b) ACCOMPANYING THE NOTICE OF ALLOWANCE (37 CFR 1.705(b))" filed September 9, 2011. Applicants requests that the initial Determination of Patent Term Adjustment under 35 U.S.C. 154(b) be corrected from four hundred and eighty-eight (488) days to six hundred and sixty-one (661) days.

The request for review of determination of the patent term adjustment is **GRANTED TO THE EXTENT INDICATED HEREIN.**

The Office has updated the PALM and PAIR screens to reflect that the correct Patent Term Adjustment (PTA) determination at the time of the mailing of the Notice of Allowance is **six hundred and eleven (611) days.** A copy of the updated PALM screen, showing the corrected determination, is enclosed.

On June 10, 2011, a Determination of Patent Term Adjustment under 35 U.S.C. 154(b) was mailed indicating that the patent term adjustment to date was 488 days. On September 9, 2011, applicant submitted the instant petition. Applicant asserts the Determination of Patent Term Adjustment under 35 U.S.C. 154(b) mailed June 10, 2011, is incorrect Specifically, applicants' argue that the period of reduction of 128 days to the patent term adjustment under 37 CFR 1.704(b) for the filing of a Request for Continued Examination filed three months and 128 days after a final Office action July 21, 2009, was mailed is in error.

Applicants' argument has been considered and is persuasive. A review of the application file history reveals that a final Office action was mailed July 21, 2009. On October 21, 2009,

applicants filed a Notice of Appeal. This filing tolled the period under 37 CFR 1.704(b), not the subsequently filed Request for Continued Examination that was filed February 26, 2010. Accordingly, the period of adjustment set forth in § 1.703 should have been reduced under 37 CFR 1.704(b) by 5 days, the number of days in the period beginning on the day after the date that is three months after the date of mailing of the final Office action, October 22, 2009, and ending on the date the Notice of Appeal was filed October 26, 2009. **The period of reduction to the patent term adjustment of 128 days is being removed and a period of reduction of 5 days will be entered.**

In view thereof, the determination of the patent term adjustment at the time of the mailing of the notice of allowance is **six hundred and eleven** (709 days of Office delay - 98 days of Applicant delay).

The Office is in receipt of the $200.00 fee set forth in 37 CFR 1.18(e) which is a requirement for consideration of the application for patent term adjustment under 37 CFR 1.705(b).

Applicants are reminded that any delays by the Office pursuant to 37 CFR 1.702(a)(4) and 1.702(b) and any applicant delays under 37 CFR 1.704(c)(10) will be calculated at the time of the issuance of the patent and applicants will be notified of the revised patent term adjustment to be indicated on the patent in the Issue Notification letter that is mailed to applicants approximately three weeks prior to issuance.

Telephone inquiries regarding this specific matter should be directed to the undersigned at (571) 272-3222.

/Kenya A. McLaughlin/

Kenya A. McLaughlin
Petitions Attorney
Office of Petitions

Enclosure: Copy of REVISED PALM screen

PTA/PTE Information | Patent Term Adjustment | Patent Term Extension

Application Number*: 10695008 [Search] Explanation of PTA Calculation Explanation of PTE Calculation

PTA Calculations for Application: 10695008

Application Filing Date	10/28/2003	OverLapping Days Between (A and B) or (A and C)	0
Issue Date of Patent		Non-Overlapping USPTO Delays:	709
A Delays	709	PTO Manual Adjustment	123
B Delays	0	Applicant Delay (APPL)	221
C Delays	0	Total PTA (days)	611

* - Sorted Column

File Contents History

Action Number	Action Recorded Date	Action Due Date	Action Code	Action Description	Duration PTO	Duration APPL		Parent Action Number
88	09/16/2011		P028	Adjustment of PTA Calculation by PTO	123		0	
76	06/10/2011		MN/=.	Mail Notice of Allowance			0	
75	06/07/2011		IREV	Issue Revision Completed			0	
74	05/28/2011		ACRE	Allowed Case Returned to the Examiner for Clerical Processing			0	
73	05/28/2011		DVER	Document Verification			0	
72	05/28/2011		N/=.	Notice of Allowance Data Verification Completed			0	
71	05/28/2011		DOCK	Case Docketed to Examiner in GAU			0	
70	05/28/2011		EX.A	Examiner's Amendment Communication			0	
69	05/28/2011		CNTA	Allowability Notice			0	
68	02/24/2011		FWDX	Date Forwarded to Examiner			0	
67	02/22/2011	12/21/2010	A...	Response after Non-Final Action		63	65	
66	02/22/2011		XT/G	Request for Extension of Time - Granted			0	
65	09/21/2010		MCTNF	Mail Non-Final Rejection			0	
64	09/20/2010		CTNF	Non-Final Rejection			0	
63	07/25/2010		FWDX	Date Forwarded to Examiner			0	
62	07/22/2010		ELC.	Response to Election / Restriction Filed			0	
61	06/22/2010		MCTRS	Mail Restriction Requirement			0	
60	06/21/2010		CTRS	Restriction/Election Requirement			0	
59	03/02/2010		FWDX	Date Forwarded to Examiner			0	
56	03/02/2010		ABN9	Disposal for a RCE / CPA / R129			0	
58	02/26/2010		AMSB	Amendment Submitted/Entered with Filing of CPA/RCE			0	
57	02/26/2010	10/21/2009	RCEX	Request for Continued Examination (RCE)		128	53	
55	02/26/2010		BRCE	Workflow - Request for RCE - Begin			0	
53	07/21/2009		MCTFR	Mail Final Rejection (PTOL - 326)			0	
52	07/20/2009		CTFR	Final Rejection			0	
51	05/12/2009		FWDX	Date Forwarded to Examiner			0	
50	04/06/2009		A...	Response after Non-Final Action			0	
49	01/06/2009		MCTNF	Mail Non-Final Rejection			0	
48	01/05/2009		CTNF	Non-Final Rejection			0	
47	10/22/2008		FWDX	Date Forwarded to Examiner			0	
44	10/06/2008		DOCK	Case Docketed to Examiner in GAU			0	
46	10/02/2008	09/02/2008	A...	Response after Non-Final Action		30	43	
45	10/02/2008		XT/G	Request for Extension of Time - Granted			0	
43	06/02/2008	08/14/2007	MCTNF	Mail Non-Final Rejection			32	
42	05/29/2008		CTNF	Non-Final Rejection			0	
41	03/17/2008		APBR	Appeal Brief Review Complete			0	
40	03/17/2008		FWDX	Date Forwarded to Examiner			0	
39	03/14/2008		AP.B	Appeal Brief Filed			0	
38	03/14/2008		XT/G	Request for Extension of Time - Granted			0	
37	01/14/2008		APBD	Notice -- Defective Appeal Brief			0	
36	01/10/2008		APBR	Appeal Brief Review Complete			0	
35	01/10/2008		FWDX	Date Forwarded to Examiner			0	
34.1	12/14/2007		APBI	Defective / Incomplete Appeal Brief Filed			0	
34	12/14/2007		AP.B	Appeal Brief Filed			0	
33	12/14/2007		XT/G	Request for Extension of Time - Granted			0	
32	08/14/2007		N/AP	Notice of Appeal Filed			0	
31	08/08/2007		MCTAV	Mail Advisory Action (PTOL - 303)			0	
30	08/03/2007		CTAV	Advisory Action (PTOL-303)			0	
29	07/18/2007		FWDX	Date Forwarded to Examiner			0	
28	07/16/2007		A.NE	Amendment after Final Rejection			0	
27	05/14/2007		MCTFR	Mail Final Rejection (PTOL - 326)			0	
26	05/10/2007		CTFR	Final Rejection			0	
25	03/09/2007		FWDX	Date Forwarded to Examiner			0	
24	03/07/2007		A...	Response after Non-Final Action			0	
23	12/07/2006	12/28/2004	MCTNF	Mail Non-Final Rejection	709		0.5	

22	12/05/2006	CTNF	Non-Final Rejection	0
20	11/02/2006	DOCK	Case Docketed to Examiner in GAU	0
19	10/20/2006	DOCK	Case Docketed to Examiner in GAU	0
18	02/02/2006	LET.	Miscellaneous Incoming Letter	0
21	01/27/2005	IDSC	Information Disclosure Statement considered	0
17	01/27/2005	RCAP	Reference capture on IDS	0
16.7	01/27/2005	M844	Information Disclosure Statement (IDS) Filed	0
16	01/27/2005	WIDS	Information Disclosure Statement (IDS) Filed	0
15	10/16/2004	TSSCOMP	IFW TSS Processing by Tech Center Complete	0
14	10/16/2004	DOCK	Case Docketed to Examiner in GAU	0
13	03/19/2004	LET.	Miscellaneous Incoming Letter	0
12	02/05/2004	WROIPE	Application Return from OIPE	0
11	02/05/2004	ROIPE	Application Return TO OIPE	0
10	02/05/2004	COMP	Application Is Now Complete	0
7	02/04/2004	OIPE	Application Dispatched from OIPE	0
6	02/04/2004	COMP	Application Is Now Complete	0
5	01/28/2004	L128	Cleared by L&R (LARS)	0
4	01/20/2004	L198	Referred to Level 2 (LARS) by OIPE CSR	0
3	01/20/2004	CLSS	CASE CLASSIFIED BY OIPE	0
2	11/29/2003	SCAN	IFW Scan & PACR Auto Security Review	0
1	10/28/2003	IEXX	Initial Exam Team nn	0
0.5	10/28/2003	EFILE	Filing date	0

Export to: Excel

UNITED STATES PATENT AND TRADEMARK OFFICE

Commissioner for Patents
United States Patent and Trademark Office
P.O. Box 1450
Alexandria, VA 22313-1450
www.uspto.gov

BARNES & THORNBURG LLP
600 ONE SUMMIT SQUARE
FORT WAYNE, IN 46802

MAILED
OCT 25 2011
OFFICE OF PETITIONS

In re Patent No. 6,772,746
Issue Date: August 10, 2004
Application No. 10/695,036
Filed: October 28, 2003
Attorney Docket No. 38019/83315

NOTICE

This is a notice regarding your request for acceptance of a fee deficiency submission under 37 CFR 1.28. On September 1, 1998, the Court of Appeals for the Federal Circuit held that 37 CFR 1.28(c) is the sole provision governing the time for correction of the erroneous payment of the issue fee as a small entity. **See DH Technology v. Synergystex International, Inc. 154 F.3d 1333, 47 USPQ2d 1865 (Fed. Cir. Sept. 1, 1998).**

The Office no longer investigates or rejects original or reissue applications under 37 CFR 1.56. **1098 Off. Gaz. Pat. Office 502 (January 3, 1989)**. Therefore, nothing in this Notice is intended to imply that an investigation was done.

Your fee deficiency submission under 37 CFR 1.28 is hereby **ACCEPTED**.

Inquiries related to this communication should be directed to Irvin Dingle at (571) 272-3210.

Irvin Dingle
Petitions Examiner
Office of Petitions

UNITED STATES PATENT AND TRADEMARK OFFICE

UNITED STATES DEPARTMENT OF COMMERCE
United States Patent and Trademark Office
Address: COMMISSIONER FOR PATENTS
P.O. Box 1450
Alexandria, Virginia 22313-1450
www.uspto.gov

APPLICATION NO.	FILING DATE	FIRST NAMED INVENTOR	ATTORNEY DOCKET NO.	CONFIRMATION NO.
10/695,247	10/27/2003	Wayne Dawson	F-8015	5890

7590 03/03/2011
JORDAN AND HAMBURG LLP
122 EAST 42ND STREET
SUITE 4000
NEW YORK, NY 10168

EXAMINER
SKOWRONEK, KARLHEINZ R

ART UNIT	PAPER NUMBER
1631	

MAIL DATE	DELIVERY MODE
03/03/2011	PAPER

ACKNOWLEDGEMENT OF REQUEST

Notice of Allowance/Allowability Mailed

The request to print a color drawing reference as the first paragraph in the portion of the specification containing a brief description of the drawings as required by 37 CFR 1.84 and MPEP § 608.02 has been received by the United States Patent and Trademark Office and will be entered into the specification.

571-272-4200 or 1-888-786-0101
Application Assistance Unit
Office of Data Management

FORM PTOM327-5 (Rev. 02/08)

UNITED STATES PATENT AND TRADEMARK OFFICE

Commissioner for Patents
United States Patent and Trademark Office
P.O. Box 1450
Alexandria, VA 22313-1450
www.uspto.gov

March 2, 2011

JORDAN AND HAMBURG LLP
122 EAST 42ND STREET
SUITE 4000
NEW YORK NY 10168

In re Application of	:	
Wayne Dawson, et al	:	**DECISION ON PETITION**
Application No. 10695247	:	
Filed: 10/27/2003	:	***ACCEPTANCE OF COLOR***
Attorney Docket No. **F-8015**	:	***DRAWINGS***

This is a decision on the Petition to Accept Color Drawings under 37 C.F.R 1.84 (a) (2), received in the United States Patent and Trademark Office (USPTO) October 27, 2003.

The petition is **GRANTED**.

A grantable petition under 37 C.F.R. 1.84(a) (2) must be accompanied by the following.

1. The fee set forth under 37 C.F.R. 1.17(h),
2. Three (3) sets of the color drawings in question, or (1) set if filed via EFS, and
3. The specification contains appropriate language referring to the color drawings as the first paragraph in that portion of the specification relating to the brief description of the drawings.

The petition was accompanied by all of the required fees and drawings. The specification contains the appropriate language. Therefore, the petition is GRANTED.

Telephone inquires relating to this decision may be directed to the undersigned in the Office of Data Management at 571-272-4200.

/Laura Feldman/
Quality Control Specialist
Office of Data Management
Publications Branch

UNITED STATES PATENT AND TRADEMARK OFFICE

Commissioner for Patents
United States Patent and Trademark Office
P.O. Box 1450
Alexandria, VA 22313-1450
www.uspto.gov

MAILED
APR 11 2011
OFFICE OF PETITIONS

YOUNG & THOMPSON
209 MADISON STREET
SUITE 500
ALEXANDRIA, VA 22314

In re Application of	:	
Sixten Johansson	:	DECISION ON PETITION
Application No. 10/695,410	:	TO WITHDRAW
Filed: October 27, 2003	:	FROM RECORD
Attorney Docket No. 3502-1092	:	

This is a decision on the Request to Withdraw as attorney or agent of record under 37 C.F.R. § 1.36(b), filed February 11, 2011.

The request is **NOT APPROVED**.

The Office strongly encourages practitioner(s) requesting withdrawal from representation as practitioner of record in an application to review the record to determine whether he or she is, in fact, of record and how he or she was made of record. For example, the practitioner(s) should determine whether he or she was appointed by naming each practitioner individually or through the use of a Customer Number.

In the instant application, the practitioner(s) were appointed via Customer Number however the request does not designate a Customer Number to be withdrawn by. The request was signed by Liam McDowell on behalf of all the practitioners (with registration numbers) of record listed on the attached papers.

Further, the Office will require the practitioner(s) to certify that he, she or they have: (1) given reasonable notice to the client, prior to the expiration of the reply period, which the practitioner(s) intends to withdraw from employment; (2) delivered to the client or a duly authorized representative of the client all papers and property (including funds) to which the client is entitled; and (3) notified the client of any replies that may be due and the time frame within which the client must respond, pursuant to 37 CFR 10.40(c).

The current request does not properly withdraw practitioners via Customer Number as it does not set forth all of the above certifications. Therefore, the request cannot be approved at this time. Any subsequent request must withdraw all associated practitioner(s) in the same manner as appointed and provide all of the above listed certifications pursuant to 37 CFR 10.40(c).

There are no outstanding Office actions that require a reply from the applicant.

All future communications from the Office will be directed to above-listed address until otherwise properly notified by the applicant or a proper change of correspondence address have been submitted.

A. Kelley

Alicia Kelley
Petitions Examiner
Office of Petitions

PTO/SB/66 (03-09)
Approved for use through 03/31/2012. OMB 0651-0016
U.S. Patent and Trademark Office: U.S. DEPARTMENT OF COMMERCE
Under the Paperwork Reduction Act of 1995, no persons are required to respond to a collection of information unless it displays valid OMB control number.

PETITION TO ACCEPT UNINTENTIONALLY DELAYED PAYMENT OF MAINTENANCE FEE IN AN EXPIRED PATENT (37 CFR 1.378(c))

Patent Number	Issue Date (YYYY-MM-DD)	Application Number	Filing Date (YYYY-MM-DD)	Docket Number (if applicable)
7137964	2006-11-21	10695547	2003-10-28	59249-164 (INSL-110CN)

CAUTION: Maintenance fee (and surcharge, if any) payment must correctly identify: (1) the patent number and (2) the application number of the actual U.S. application leading to issuance of that patent to ensure the fee(s) is/are associated with the correct patent. 37 CFR 1.366(c) and (d).

SMALL ENTITY
☒ Patentee claims, or has previously claimed, small entity status. See 37 CFR 1.27.

LOSS OF ENTITLEMENT TO SMALL ENTITY STATUS
☐ Patentee is no longer entitled to small entity status. See 37 CFR 1.27(g)

NOT Small Entity		Small Entity	
Fee	Code	Fee	Code
○ 3 ½ year	(1551)	◉ 3 ½ year	(2551)
○ 7 ½ year	(1552)	○ 7 ½ year	(2552)
○ 11 ½ year	(1553)	○ 11 ½ year	(2553)

SURCHARGE
The surcharge required by 37 CFR 1.20(i)(2) (Fee Code 1558) must be paid as a condition of accepting unintentionally delayed payment of the maintenance fee.

MAINTENANCE FEE (37 CFR 1.20(e)-(g))
The appropriate maintenance fee must be submitted with this petition.

STATEMENT
THE UNDERSIGNED CERTIFIES THAT THE DELAY IN PAYMENT OF THE MAINTENANCE FEE TO THIS PATENT WAS UNINTENTIONAL

PETITIONER(S) REQUEST THAT THE DELAYED PAYMENT OF THE MAINTENANCE FEE BE ACCEPTED AND THE PATENT REINSTATED

THIS PORTION MUST BE COMPLETED BY THE SIGNATORY OR SIGNATORIES

37 CFR 1.378(d) states: "Any petition under this section must be signed by an attorney or agent registered to practice before the Patent and Trademark Office, or by the patentee, the assignee, or other party in interest."

I certify, in accordance with 37 CFR 1.4(d)(4) that I am

◉ An attorney or agent registered to practice before the Patent and Trademark Office

○ A sole patentee

○ A joint patentee; I certify that I am authorized to sign this submission on behalf of all the other patentees.

○ A joint patentee; all of whom are signing this e-petition

○ The assignee of record of the entire interest

Under the Paperwork Reduction Act of 1995, no persons are required to respond to a collection of information unless it displays valid OMB control number.

Patent Practitioner			
A signature of the applicant or representative is required in accordance with 37 CFR 1.33 and 10.18. Please see 37 CFR 1.4(d) for the form of the signature			
Signature	/R. Anthony Diehl/	Date (YYYY-MM-DD)	2011-01-25
Name	R. Anthony Diehl	Registration Number	38432

This collection of information is required by 37 CFR 1.378(c). The information is required to obtain or retain a benefit by the public which is to file (and by the USPTO to process) an application. Confidentiality is governed by 35 U.S.C. 122 and 37 CFR 1.11 and 1.14. This collection is estimated to take 1 hour to complete, including gathering, preparing, and submitting the completed application form to the USPTO. Time will vary depending upon the individual case. Any comments on the amount of time you require to complete this form and/ or suggestions for reducing this burden, should be sent to the Chief Information Officer, U.S. Patent and Trademark Office, U.S. Department of Commerce, P.O. Box 1450, Alexandria, VA 22313-1450. DO NOT SEND FEES OR COMPLETED FORMS TO THIS ADDRESS. **This form can only be used when in conjunction with EFS-Web. If this form is mailed to the USPTO, it may cause delays in reinstating the patent.**

Privacy Act Statement

The Privacy Act of 1974 (P.L. 93-579) requires that you be given certain information in connection with your submission of the attached form related to a patent application or patent. Accordingly, pursuant to the requirements of the Act, please be advised that: (1) the general authority for the collection of this information is 35 U.S.C. 2(b)(2); (2) furnishing of the information solicited is voluntary; and (3) the principal purpose for which the information is used by the U.S. Patent and Trademark Office is to process and/or examine your submission related to a patent application or patent. If you do not furnish the requested information, the U.S. Patent and Trademark Office may not be able to process and/or examine your submission, which may result in termination of proceedings or abandonment of the application or expiration of the patent.

The information provided by you in this form will be subject to the following routine uses:

1. The information on this form will be treated confidentially to the extent allowed under the Freedom of Information Act (5 U.S.C. 552) and the Privacy Act (5 U.S.C. 552a). Records from this system of records may be disclosed to the Department of Justice to determine whether the Freedom of Information Act requires disclosure of these records.

2. A record from this system of records may be disclosed, as a routine use, in the course of presenting evidence to a court, magistrate, or administrative tribunal, including disclosures to opposing counsel in the course of settlement negotiations.

3. A record in this system of records may be disclosed, as a routine use, to a Member of Congress submitting a request involving an individual, to whom the record pertains, when the individual has requested assistance from the Member with respect to the subject matter of the record.

4. A record in this system of records may be disclosed, as a routine use, to a contractor of the Agency having need for the information in order to perform a contract. Recipients of information shall be required to comply with the requirements of the Privacy Act of 1974, as amended, pursuant to 5 U.S.C. 552a(m).

5. A record related to an International Application filed under the Patent Cooperation Treaty in this system of records may be disclosed, as a routine use, to the International Bureau of the World Intellectual Property Organization, pursuant to the Patent Cooperation Treaty.

6. A record in this system of records may be disclosed, as a routine use, to another federal agency for purposes of National Security review (35 U.S.C. 181) and for review pursuant to the Atomic Energy Act (42 U.S.C. 218(c)).

7. A record from this system of records may be disclosed, as a routine use, to the Administrator, General Services, or his/her designee, during an inspection of records conducted by GSA as part of that agency's responsibility to recommend improvements in records management practices and programs, under authority of 44 U.S.C. 2904 and 2906. Such disclosure shall be made in accordance with the GSA regulations governing inspection of records for this purpose, and any other relevant (i.e., GSA or Commerce) directive. Such disclosure shall not be used to make determinations about individuals.

8. A record from this system of records may be disclosed, as a routine use, to the public after either publication of the application pursuant to 35 U.S.C. 122(b) or issuance of a patent pursuant to 35 U.S.C. 151. Further, a record may be disclosed, subject to the limitations of 37 CFR 1.14, as a routine use, to the public if the record was filed in an application which became abandoned or in which the proceedings were terminated and which application is referenced by either a published application, an application open to public inspections or an issued patent.

9. A record from this system of records may be disclosed, as a routine use, to a Federal, State, or local law enforcement agency, if the USPTO becomes aware of a violation or potential violation of law or regulation.

UNITED STATES PATENT AND TRADEMARK OFFICE

Commissioner for Patents
United States Patent and Trademark Office
P.O. Box 1450
Alexandria, VA 22313-1450
www.uspto.gov

In re Patent No. 7137964
Issue Date: November 21,2006
Application No. 10695547
Filed: October 28,2003
Attorney Docket No. 59249-164 (INSL-110CN)

:
:DECISION GRANTING PETITION
:UNDER 37 CFR 1.378(c)
:

This is a decision on the electronic petition, filed January 25,2011 ,under 37 CFR 1.378(c) to accept the unintentionally delayed payment of the 3.5 year maintenance fee for the above-identified patent.

The petition is **GRANTED**.

The maintenance fee is accepted, and the above-identified patent reinstated as of January 25,2011 . This decision also constitutes notice that the fee has been accepted. An electronic copy of the petition and this decision has been created as an entry in the Image File Wrapper. Nevertheless, petitioner should print and retain an independent copy.

Telephone inquiries related to this electronic decision should be directed to the Electronic Business Center at 1-866-217-9197.

UNITED STATES PATENT AND TRADEMARK OFFICE

Commissioner for Patents
United States Patent and Trademark Office
P.O. Box 1450
Alexandria, VA 22313-1450
www.uspto.gov

VOLENTINE & WHITT PLLC
ONE FREEDOM SQUARE
11951 FREEDOM DRIVE SUITE 1260
RESTON VA 20190

MAILED
AUG 03 2010
OFFICE OF PETITIONS

In re Application of	:	
Ki-Hwan PARK et al.	:	
Application No. 10/695,770	:	DECISION ON PETITION
Filed: October 30, 2003	:	
Attorney Docket No. SEC.1101	:	

This is a decision on the petition under the unintentional provisions of 37 CFR 1.137(b), filed April 22, 2010, to revive the above-identified application.

The petition is **GRANTED**.

The application became abandoned for failure to reply in a timely manner to the Restriction Requirement, mailed September 30, 2005 , which set a shortened statutory period for reply of one (1) month or thirty (30) days (whichever is later). No extensions of time under the provisions of 37 CFR 1.136(a) were obtained. Accordingly, the application became abandoned on October 31, 2005.

The petition satisfies the requirements of 37 CFR 1.137(b) in that petitioner has supplied (1) the reply in the form of an election, (2) the petition fee of $1,620.00, and (3) a proper statement of unintentional delay. Accordingly, the reply to the Restriction Requirement of September 30, 2005 is accepted as having been unintentionally delayed.

Telephone inquiries concerning this decision should be directed to the undersigned at (571) 272-4231.

This application is being referred to Technology Center AU 1746 for appropriate action by the Examiner in the normal course of business on the reply received.

Michelle R. Eason
Paralegal Specialist
Office of Petitions

UNITED STATES PATENT AND TRADEMARK OFFICE

Commissioner for Patents
United States Patent and Trademark Office
P.O. Box 1450

MAILED
NOV 30 2011
OFFICE OF PETITIONS

Goodwin Procter LLP
Attn: Patent Administrator
135 Commonwealth Drive
Menlo Park CA 94025-1105

In re Application of	:	
Robert WARNER et al.	:	ON PETITION
Application No. 10/695,932	:	
Filed: October 29, 2003	:	
Atty. Docket No.: RDA-0002		

This is a decision on the petition under 37 CFR 1.137(b), filed October 28, 2011, to revive the above-identified application.

The petition is **GRANTED**.

The application became abandoned for failure to reply in a timely manner to the non-final Office action mailed September 26, 2006 (Office action), which set a shortened statutory period for reply of three (3) months. No extension of time under the provisions of 37 CFR 1.136(a) was obtained. The application became abandoned December 27, 2006. A Notice of Abandonment was mailed April 3, 2007.

The petition satisfies the conditions for revival pursuant to 37 CFR 1.137(b) by including (1) a reply in the form of a Response to the Office action mailed September 26, 2006, (2) a petition fee of $930, and (3) a statement of unintentional delay. The reply is accepted as having been unintentionally delayed.

It is not apparent whether the person signing the statement of unintentional delay was in a position to have firsthand or direct knowledge of the facts and circumstances of the delay at issue. Nevertheless, such statement is being treated as having been made as the result of a reasonable inquiry into the facts and circumstances of such delay. See 37 CFR 10.18(b) and Changes to Patent Practice and Procedure; Final Rule Notice, 62 Fed. Reg. 53131, 53178 (October 10, 1997), 1203 Off. Gaz. Pat. Office 63, 103 (October 21, 1997). In the event that date for the reply until the filing of a grantable petition pursuant to 37 CFR 1.137(b) was unintentional, petitioner must notify the Office.

Telephone inquiries relating to this decision should be directed to Robert DeWitty, Petitions Attorney, Office of Petitions (571-272-8427).

The application will be referred to Technology Center Art Unit 2618 for consideration of the filed Response.

Robert DeWitty
Petitions Attorney
Office of Petitions

UNITED STATES PATENT AND TRADEMARK OFFICE

Commissioner for Patents
United States Patent and Trademark Office
P.O. Box 1450
Alexandria, VA 22313-1450
www.uspto.gov

KATTEN MUCHIN ROSENMAN LLP
(C/O PATENT ADMINISTRATOR)
2900 K STREET NW, SUITE 200
WASHINGTON, DC 20007-5118

MAILED

JAN 18 2011

OFFICE OF PETITIONS

In re Application of	:	
Robert Ivkov et al.	:	
Application No. 10/696,399	:	DECISION ON PETITION
Filed: October 28, 2003	:	TO WITHDRAW
Attorney Docket No.:	:	FROM RECORD
	:	

This is a decision on the Request to Withdraw as attorney or agent of record under 37 C.F.R. § 1.36(b), filed December 6, 2010.

The request is **NOT APPROVED**.

A grantable request to withdraw as attorney/agent of record must be signed by every attorney/agent seeking to withdraw or contain a clear indication that one attorney is signing on behalf of another/others.

The request is filed by Sarah Rouse Janosik on behalf of the practitioners of record associated with Customer Number 27160.

The Office no longer accepts an address change to the new practitioner identified in the request, absent the filing of a power of attorney to the new representative. The Office will, however, change the correspondence address of record to the most current address provided for (1) the intervening assignee of the entire interest or (2) the first named inventor.

The request to withdraw from record cannot be approved at this time, since a correspondence address provided is not the intervening assignee of the entire interest or the first named inventor.

All future communications from the Office will continue to be directed to the above-listed address until otherwise notified by applicant.

Telephone inquiries concerning this decision should be directed to undersigned at 571-272-3210. All other inquiries concerning the examination or status of this application should be directed to the Technology Center.

Irvin Dingle
Petitions Examiner
Office of Petitions

UNITED STATES PATENT AND TRADEMARK OFFICE

Commissioner for Patents
United States Patent and Trademark Office
P.O. Box 1450
Alexandria, VA 22313-1450
www.uspto.gov

KATTEN MUCHIN ROSENMAN LLP
(C/O PATENT ADMINISTRATOR)
2900 K STREET NW, SUITE 200
WASHINGTON, DC 20007-5118

MAILED
FEB 07 2011
OFFICE OF PETITIONS

In re Application of	:	
Robert Ivkov et al	:	
Application No. 10/696,399	:	DECISION ON PETITION
Filed: October 28, 2003	:	TO WITHDRAW
Attorney Docket No.	:	FROM RECORD
	:	

This is a decision on the Request to Withdraw as attorney or agent of record under 37 C.F.R. § 1.36(b), filed January 28, 2011.

The request is **APPROVED**.

The request was signed by Sarah Rouse Janosik on behalf of the practitioners of record associated with Customer Number 27160.

Applicant is reminded that there is no attorney of record at this time.

All future correspondence will be directed to assignee Aduro Biotech at the address indicated below.

Telephone inquiries concerning this decision should be directed to Irvin Dingle at (571) 272-3210.

Irvin Dingle
Petitions Examiner
Office of Petitions

cc: Aduro Biotech
626 Bancroft Way, Suite 3-C
Berkeley, CA 94710

UNITED STATES PATENT AND TRADEMARK OFFICE

UNITED STATES DEPARTMENT OF COMMERCE
United States Patent and Trademark Office
Address: COMMISSIONER FOR PATENTS
P.O. Box 1450
Alexandria, Virginia 22313-1450
www.uspto.gov

APPLICATION NUMBER	FILING OR 371(C) DATE	FIRST NAMED APPLICANT	ATTY. DOCKET NO./TITLE
10/696,399	10/28/2003	Robert Ivkov	

CONFIRMATION NO. 6391

POWER OF ATTORNEY NOTICE

27160
KATTEN MUCHIN ROSENMAN LLP
(C/O PATENT ADMINISTRATOR)
2900 K STREET NW, SUITE 200
WASHINGTON, DC 20007-5118

OC000000045858619

Date Mailed: 02/07/2011

NOTICE REGARDING CHANGE OF POWER OF ATTORNEY

This is in response to the Power of Attorney filed 01/28/2011.

- The withdrawal as attorney in this application has been accepted. Future correspondence will be mailed to the new address of record. 37 CFR 1.33.

/idingle/

Office of Data Management, Application Assistance Unit (571) 272-4000, or (571) 272-4200, or 1-888-786-0101

UNITED STATES PATENT AND TRADEMARK OFFICE

UNITED STATES DEPARTMENT OF COMMERCE
United States Patent and Trademark Office
Address: COMMISSIONER FOR PATENTS
P.O. Box 1450
Alexandria, Virginia 22313-1450
www.uspto.gov

APPLICATION NUMBER	FILING OR 371(C) DATE	FIRST NAMED APPLICANT	ATTY. DOCKET NO./TITLE
10/696,399	10/28/2003	Robert Ivkov	

CONFIRMATION NO. 6391

POA ACCEPTANCE LETTER

Aduro Biotech
626 Bancroft Way, Suite 3-C
Berkeley, CA 94710

OC000000045858690

Date Mailed: 02/07/2011

NOTICE OF ACCEPTANCE OF POWER OF ATTORNEY

This is in response to the Power of Attorney filed 01/28/2011.

The Power of Attorney in this application is accepted. Correspondence in this application will be mailed to the above address as provided by 37 CFR 1.33.

/idingle/

Office of Data Management, Application Assistance Unit (571) 272-4000, or (571) 272-4200, or 1-888-786-0101

SPE RESPONSE FOR CERTIFICATE OF CORRECTION

DATE : 03/21/12

TO SPE OF : ART UNIT 2188

SUBJECT : Request for Certificate of Correction for Appl. No.: 10696467 Patent No.: 7409526

CofC mailroom date: 03/14/12

Please respond to this request for a certificate of correction within 7 days.

FOR IFW FILES:

Please review the requested changes/corrections as shown in the **COCIN** document(s) in the IFW application image. No new matter should be introduced, nor should the scope or meaning of the claims be changed.

Please complete the response (see below) and forward the completed response to scanning using document code **COCX**.

FOR PAPER FILES:

Please review the requested changes/corrections as shown in the attached certificate of correction. Please complete this form (see below) and forward it with the file to:

Certificates of Correction Branch (CofC)
Randolph Square – 9D10-A
Palm Location 7580
You can fax the Directors/SPE response to 571-273-3421

Note: **Should the changes to claim 4 be approved?**

Lamonte Newsome

Certificates of Correction Branch

571-272-3421

Thank You For Your Assistance

The request for issuing the above-identified correction(s) is hereby:
Note your decision on the appropriate box.

SPE RESPONSE FOR CERTIFICATE OF CORRECTION

☒ **Approved** — **All** changes apply.

☐ **Approved in Part** — Specify below which changes **do not** apply.

☐ **Denied** — State the reasons for denial below.

Comments: Approved.

/Mano Padmanabhan/ — 2188

SPE — **Art Unit**

UNITED STATES PATENT AND TRADEMARK OFFICE

Commissioner for Patents
United States Patent and Trademark Office
P.O. Box 1450
Alexandria, VA 22313-1450
www.uspto.gov

MAILED

OCT 08 2010

OFFICE OF PETITIONS

CHARLES G. CALL
361 WILD COFFEE LN.
MARCO ISLAND, FL 34145-1849

In re Application of	:	
Carlo Filippo Ratti et al	:	
Application No. 10/696,474	:	DECISION ON PETITION
Filed: October 29, 2003	:	
Attorney Docket No. D-22	:	

This is a decision on the petition under the unintentional provisions of 37 CFR 1.137(b), filed August 4, 2010, to revive the above-identified application.

The petition is **DISMISSED.**

Any request for reconsideration of this decision must be submitted within TWO (2) MONTHS from the mail date of this decision. Extensions of time under 37 CFR 1.136(a) are permitted. The reconsideration request should include a cover letter entitled "Renewed Petition under 37 CFR 1.137(b)." This is not a final agency action within the meaning of 5 U.S.C. § 704.

The above-identified application became abandoned for failure to reply in a timely manner to the non-final Office action mailed September 27, 2007, which set a shortened statutory period for reply of three (3) months. No extension of time under the provisions of 37 CFR 1.136(a) were obtained. Accordingly, the above-identified application became abandoned on December 28, 2007.

A grantable petition under 37 CFR 1.137(b) must be accompanied by: (1) the required reply, unless previously filed; (2) the petition fee as set forth in 37 CFR 1.17(m); (3) a statement that the entire delay in filing the required reply from the due date for the reply until the filing of a grantable petition pursuant to 37 CFR 1.137(b) was unintentional; and (4) any terminal disclaimer (and fee as set forth in 37 CFR 1.20(d)) required by 37 CFR 1.137(d). Where there is a question as to whether either the abandonment or the delay in filing a petition under 37 CFR 1.137 was unintentional, the Director may require additional information. See MPEP 711.03(c)(II)(C) and (D). The instant petition lack items (3).

There are three periods to be considered during the evaluation of a petition under 37 CFR 1.137(b):

(1) the delay in reply that originally resulted in the abandonment;

(2) the delay in filing an initial petition pursuant to 37 CFR 1.137(b) to revive the application; and

(3) the delay in filing a grantable petition pursuant to 37 CFR 1.137(b) to revive the application.

Currently, the delay has not been shown to the satisfaction of the Director to be unintentional for periods (1) and (2).

As to Period (1):

The patent statute at 35 U.S.C. § 41(a)(7) authorizes the Director to revive an "unintentionally abandoned application." The legislative history of Public Law 97-247 reveals that the purpose of 35 U.S.C. § 41(a)(7) is to permit the Office to have more discretion than in 35 U.S.C. §§ 133 or 151 to revive abandoned applications in appropriate circumstances, but places a limit on this discretion, stating that "[u]nder this section a petition accompanied by either a fee of $500 or a fee of $50 would not be granted where the abandonment or the failure to pay the fee for issuing the patent was intentional as opposed to being unintentional or unavoidable." See H.R. Rep. No. 542, 97th Cong., 2d Sess. 6-7 (1982), reprinted in 1982 U.S.C.C.A.N. 770-71. The revival of an intentionally abandoned application is antithetical to the meaning and intent of the statute and regulation.

35 U.S.C. § 41(a)(7) authorizes the Director to accept a petition "for the revival of an unintentionally abandoned application for a patent." As amended December 1, 1997, 37 CFR 1.137(b)(3) provides that a petition under 37 CFR 1.137(b) must be accompanied by a statement that the delay was unintentional, but provides that "[t]he Commissioner may require additional information where there is a question whether the delay was unintentional." Where, as here, there is a question whether the initial delay was unintentional, the petitioner must meet the burden of establishing that the delay was unintentional within the meaning of 35 U.S.C. § 41(a)(7) and 37 CFR 1.137(b). See In re Application of G, 11 USPQ2d 1378, 1380 (Comm'r Pats. 1989); 37 CFR 1.137(b). Here, in view of the inordinate delay (2 years) in resuming prosecution, there is a question whether the entire delay was unintentional. Petitioner should note that the issue is not whether some of the delay was unintentional by any party; rather, the issue is whether the entire delay has been shown to the satisfaction of the Director to be unintentional.

The question under 37 CFR 1.137(b) for period (1) is whether the delay on the part of the party having the right or authority to reply to avoid abandonment (or not reply) was unintentional.

Accordingly, any renewed petition must clearly identify the party having the right to reply to avoid abandonment on December 28, 2007. That party, in turn must explain what effort(s) was made to further reply to the outstanding Office action and, further, why no reply was filed. If no effort was made to further reply, then that party must explain why the delay in this application does not result from a deliberate course of action (or inaction). Likewise, as Charles Call was counsel of record at the time of abandonment, Charles Call should explain why this application became abandoned while it was under his control and what efforts he made to further reply of itself and with whom this matter was discussed outside of Mr. Call. Copies of any correspondence relating to the filing, or to not filing a further reply to the outstanding Office action are required from responsible person(s), Charles Call and whoever else was involved with this application at the time of abandonment. Statements are required from any and all persons responsible for handling this application, and the responsible person(s) having firsthand knowledge of the circumstances surrounding the lack of a reply to the outstanding Office action. As the courts have made clear, it is pointless for the USPTO to revive a long abandoned application without an adequate showing that the delay did not result from a deliberate course of action. See Lawman Armor v. Simon, 2005 U.S. Dist. LEXIS 10843, 74 USPQ2d 1633 (DC EMich 2005); Field Hybrids, LLC v. Toyota Motor Corp., 2005 U.S. Dist. LEXIS 1159 (D. Minn Jan. 27, 2005); Lumenyte Int'l Corp. v. Cable Lite Corp., Nos. 96-1011, 96-1077, 1996 U.S. App. LEXIS 16400, 1996 WL 383927 (Fed. Cir. July 9, 1996) (unpublished) (patents held unenforceable due to a finding of inequitable conduct in submitting an inappropriate statement that the abandonment was unintentional).

As to Period (2):

Likewise, where the applicant deliberately chooses not to seek or persist in seeking the revival of an abandoned application, or where the applicant deliberately chooses to delay seeking the revival of an abandoned application, the resulting delay in seeking revival of the abandoned application cannot be considered as "unintentional" within the meaning of 37 CFR 1.137(b). See MPEP 711.03(c).

The language of both 35 U.S.C. § 41(a)(7) and 37 CFR 1.137(b) are clear and unambiguous, and, furthermore, without qualification. That is, the delay in filing the reply during prosecution, as well as in filing the petition seeking revival, must have been, without qualification, "unintentional" for the reply to now be accepted on petition. The Office requires that the entire delay be at least unintentional as a prerequisite to revival of an abandoned application to prevent abuse and injury to the public. See H.R. Rep. No. 542, 97th Cong., 2d Sess. 7 (1982), reprinted in 1982 U.S.C.C.A.N. 771 ("[i]n order to prevent abuse and injury to the public the Commissioner . . . could require applicants to act promptly after becoming aware of the abandonment"). The December 1997 change to 37 CFR 1.137 did not create any new right to overcome an intentional delay in seeking revival, or in renewing an attempt at seeking revival, of an abandoned application. See Changes to Patent Practice and Procedure; Final Rule Notice, 62 Fed. Reg. 53131, 53160 (October 10, 1997), 1203 Off. Gaz. Pat. Office 63, 87 (October 21, 1997), which clearly stated that any protracted delay (here, over 2 years) could trigger, as here, a request for additional information. As the courts have since made clear, a protracted delay in seeking revival, as here, requires a petitioner's detailed explanation seeking to excuse the delay as

opposed to USPTO acceptance of a general allegation of unintentional delay. See Lawman Armor v. Simon, 2005 U.S. Dist. LEXIS 10843, 74 USPQ2d 1633, at 1637-8 (DC EMich 2005); Field Hybrids, LLC v. Toyota Motor Corp., 2005 U.S. Dist. LEXIS 1159 (D. Minn Jan. 27, 2005) at *21-*23. Statements are required from any and all persons handling this application and the responsible person(s) having firsthand knowledge of the circumstances surrounding the protracted delay, after the abandonment date, in seeking revival.

As noted in MPEP 711.03(c)(II), subsection D, in instances in which such petition was not filed within 1 year of the date of abandonment of the application, applicants should include:

> (A) the date that the applicant first became aware of the abandonment of the application; and
> (B) a showing as to how the delay in discovering the abandoned status of the application occurred despite the exercise of due care or diligence on the part of the applicant.

In either instance, applicant's failure to carry the burden of proof to establish that the "entire" delay was "unavoidable" or "unintentional" may lead to the denial of a petition under 37 CFR 1.137(b), regardless of the circumstances that originally resulted in the abandonment of the application. See also New York University v. Autodesk, 2007 U.S. DIST LEXIS, U.S.District LEXIS 50832, *10 -*12 (S.D.N.Y. 2007)(protracted delay in seeking revival undercuts assertion of unintentional delay).

The file does not indicate a change of address has been submitted, although the address given on the petition differs from the address of record. If appropriate, a change of address should be filed in accordance with MPEP 601.03. A courtesy copy of this decision is being mailed to the address given on the petition; however, the Office will mail all future correspondence solely to the address of record.

Any renewed petition may be addressed as follows:

By Mail: Mail Stop PETITION
Commissioner for Patents
P. O. Box 1450
Alexandria, VA 22313-1450

By hand: U. S. Patent and Trademark Office
Customer Service Window, Mail Stop Petitions
Randolph Building
401 Dulany Street
Alexandria, VA 22314

The centralized facsimile number is (571) 273-8300.

Correspondence regarding this decision may also be filed through the electronic filing system of the USPTO.

To expedite consideration, petitioner may wish to contact the undersigned regarding the filing of the renewed petition under 37 CFR 1.137(b).

Telephone inquiries concerning this decision should be directed to the undersigned at (571) 272-3210.

Irvin Dingle
Petitions Examiner
Office of Petitions

cc: Charles Call
1329 N. Dearborn St., Apt. 3
Chicago, IL

UNITED STATES PATENT AND TRADEMARK OFFICE

Commissioner for Patents
United States Patent and Trademark Office
P.O. Box 1450
Alexandria, VA 22313-1450
www.uspto.gov

CHARLES G. CALL
361 WILD COFFEE LN
MARCO ISLAND, FL 34145-1849

MAILED

JAN 18 2011

OFFICE OF PETITIONS

In re Application of	:	
Carlo Filippo Ratti et al	:	
Application No. 10/696,474	:	ON PETITION
Filed: October 29, 2003	:	
Attorney Docket No. D-22	:	

This is a decision on the renewed petition under 37 CFR 1.137(b), filed December 8, 2010, to revive the above-identified application.

The petition is **GRANTED.**

Telephone inquiries concerning this decision should be directed to Irvin Dingle at (571) 272-3210.

This matter is being referred to Technology Center AU 2624 for further processing.

Irvin Dingle
Petitions Examiner
Office of Petitions

UNITED STATES PATENT AND TRADEMARK OFFICE

Commissioner for Patents
United States Patent and Trademark Office
P.O. Box 1450
Alexandria, VA 22313-1450
www.uspto.gov

KNOBBE MARTENS OLSON & BEAR LLP
2040 MAIN STREET
FOURTEENTH FLOOR
IRVINE CA 92614

MAILED
MAR 01 2012
OFFICE OF PETITIONS

In re Application of	:	
RAMACHANDRAN, et al	:	
Application No. 10/696,626	:	DECISION ON PETITION
Filed: October 29, 2003	:	
Attorney Docket No. SKYWRKS.000GEN	:	

This is a decision on the petition under the unintentional provisions of 37 CFR 1.137(b), filed January 19, 2012, to revive the above-identified application.

The petition is **GRANTED**.

The application became abandoned for failure to timely pay the issue and publications fees on or before October 18, 2011, as required by the Notice of Allowance and Fee(s) Due, mailed July 18, 2011, which set a statutory period for reply of three (3) months. Accordingly, the application became abandoned on October 19, 2011. A Notice of Abandonment was mailed November 7, 2011.

The petition satisfies the requirements of 37 CFR 1.137(b) in that petitioner has supplied (1) the reply in the form of payment of the issue fee of $1740 and publication fee of $300; (2) the petition fee of $1860; and (3) the required statement of unintentional delay.

It is not apparent whether the person signing the statement of unintentional delay was in a position to have firsthand or direct knowledge of the facts and circumstances of the delay at issue. Nevertheless, such statement is being treated as having been made as the result of a reasonable inquiry into the facts and circumstances of such delay. See 37 CFR 10.18(b) and Changes to Patent Practice and Procedure; Final Rule Notice, 62 Fed. Reg. 53131, 53178 (October 10, 1997), 1203 Off. Gaz. Pat. Office 63, 103 (October 21, 1997). In the event that such an inquiry has not been made, petitioner must make such an inquiry. If such inquiry results in the discovery that it is not correct that the entire delay in filing the required reply from the due date for the reply until the filing of a grantable petition pursuant to 37 CFR 1.137(b) was unintentional, petitioner must notify the Office.

There is no indication that the person signing the petition was ever given a power of attorney to prosecute the application. If the person signing the petition desires to receive future

correspondence regarding this application, the appropriate power of attorney document must be submitted.

Telephone inquiries concerning this decision should be directed to the undersigned at (571) 272-6735.

The application is being referred to the Office of Data Management for processing into a patent.

/Diane Goodwyn/
Diane Goodwyn
Petitions Examiner
Office of Petitions

UNITED STATES PATENT AND TRADEMARK OFFICE

Commissioner for Patents
United States Patent and Trademark Office
P.O. Box 1450
Alexandria, VA 22313-1450
www.uspto.gov

MICHAEL E. PROSEK
4766 MARSH HAMMOCK DRIVE EAST
JACKSONVILLE FL 32224

MAILED

OCT 21 2010

OFFICE OF PETITIONS

In re Application of	:	
Michael Ugene	:	
Application No. 10/696,833	:	DECISION ON PETITION
Filed: October 30, 2003	:	
Attorney Docket No.	:	

This is a decision on the petition under the unintentional provisions of 37 CFR 1.137(b), filed September 7, 2010, to revive the above-identified application.

The petition is **GRANTED**.

The application became abandoned for failure to reply in a timely manner to the Notice to File Missing Parts of Non-Provisional Application (Notice), mailed April 26, 2006. The Notice set a period for reply of two (2) months from the mail date of the Notice. No extensions of time under the provisions of 37 CFR 1.136(a) was obtained. Accordingly, the application became abandoned on June 27, 2006. A Notice of Abandonment was mailed February 21, 2007.

The petition satisfies the requirements of 37 CFR 1.137(b) in that petitioner has supplied (1) the reply in the form of a preliminary amendment (2) the petition fee of $810, and (3) a proper statement of unintentional delay. Accordingly the preliminary amendment is accepted as being unintentionally delayed.

The application file does not indicate a change of address has been filed in this case, although the address given on the petition differs from the address of record. A change of address should be filed in this case in accordance with MPEP 601.03. A courtesy copy of this decision is being mailed to the address noted on the petition. However, until otherwise instructed, all future correspondence regarding this application will be mailed solely to the address of record.

It is not apparent whether the person signing the statement of unintentional delay was in a position to have firsthand or direct knowledge of the facts and circumstances of the delay at issue. Nevertheless, such statement is being treated as having been made as the result of a reasonable inquiry into the facts and circumstances of such delay. See 37 CFR 10.18(b) and Changes to Patent Practice and Procedure; Final Rule Notice, 62 Fed. Reg. 53131, 53178 (October 10, 1997), 1203 Off. Gaz. Pat. Office 63, 103 (October 21, 1997). In the event that such an inquiry has not been made, petitioner must make such an inquiry. If such inquiry results in the discovery that it is not correct that the entire delay in filing the required reply from the due date for the reply until the filing of a grantable petition pursuant to 37 CFR 1.137(b) was unintentional, petitioner must notify the Office.

Telephone inquiries regarding this decision should be directed to the Kimberly Inabinet at (571) 272-4618.

This application is being referred to the Office of Patent Application Processing for appropriate action in the normal course of business on the reply received September 7, 2010. Inquires regarding the status of the application should be directed to 571-272-4000.

/Kimberly Inabinet/

Kimberly Inabinet
Petitions Examiner
Office of Petitions

cc: William E. Noonan
P.O. Box 07388
Fort Myers, FL 33919

UNITED STATES PATENT AND TRADEMARK OFFICE

Commissioner for Patents
United States Patent and Trademark Office
P.O. Box 1450
Alexandria, VA 22313-1450
www.uspto.gov

HOFFMANN & BARON, LLP
6900 JERICHO TURNPIKE
SYOSSET NY 11791

MAILED
JUN 16 2011
OFFICE OF PETITIONS

In re Application of	:	
MANGIN, Stephen P. et al.	:	
Application No. 10/696,845	:	DECISION ON PETITION
Filed: October 29, 2003	:	TO WITHDRAW
Attorney Docket No. **792-114**	:	FROM RECORD
	:	

This is a decision on the Request to Withdraw as attorney or agent of record under 37 C.F.R. § 1.36(b), filed May 12, 2011.

The request is **NOT APPROVED**.

The Office will no longer accept address changes to a new practitioner or law firm filed with a Request, absent the filing of a power of attorney to the new representative. The Office will either change the correspondence address of record to the most current address information provided for the assignee of the entire interest who properly became of record under 37 C.F.R 3.71 or, if no assignee of the entire interest has properly been made of record under 37 CFR 3.71, the most current address information provided for the first named inventor.

Accordingly, the request to withdraw from record cannot be approved because the change of address is not that of: (1) the first named inventor; or (2) an assignee of the entire interest under C.F.R 3.71, who has properly intervened.

All future communications from the Office will continue to be directed to the above-listed address until otherwise notified by applicant.

Telephone inquiries concerning this decision should be directed to the undersigned at 571-272-4231.

Michelle R. Eason
Paralegal Specialist
Office of Petitions

PTO/SB/66 (03-09)
Approved for use through 03/31/2012. OMB 0651-0016
U.S. Patent and Trademark Office: U.S. DEPARTMENT OF COMMERCE
Under the Paperwork Reduction Act of 1995, no persons are required to respond to a collection of information unless it displays valid OMB control number.

PETITION TO ACCEPT UNINTENTIONALLY DELAYED PAYMENT OF MAINTENANCE FEE IN AN EXPIRED PATENT (37 CFR 1.378(c))

Patent Number	Issue Date (YYYY-MM-DD)	Application Number	Filing Date (YYYY-MM-DD)	Docket Number (if applicable)
7,112,297	2006-09-26	10/697,302	2003-10-31	AQUA-018-A

CAUTION: Maintenance fee (and surcharge, if any) payment must correctly identify: (1) the patent number and (2) the application number of the actual U.S. application leading to issuance of that patent to ensure the fee(s) is/are associated with the correct patent. 37 CFR 1.366(c) and (d).

SMALL ENTITY
☒ Patentee claims, or has previously claimed, small entity status. See 37 CFR 1.27.

LOSS OF ENTITLEMENT TO SMALL ENTITY STATUS
☐ Patentee is no longer entitled to small entity status. See 37 CFR 1.27(g)

NOT Small Entity		Small Entity	
Fee	Code	Fee	Code
○ 3 ½ year	(1551)	◉ 3 ½ year	(2551)
○ 7 ½ year	(1552)	○ 7 ½ year	(2552)
○ 11 ½ year	(1553)	○ 11 ½ year	(2553)

SURCHARGE
The surcharge required by 37 CFR 1.20(i)(2) (Fee Code 1558) must be paid as a condition of accepting unintentionally delayed payment of the maintenance fee.

MAINTENANCE FEE (37 CFR 1.20(e)-(g))
The appropriate maintenance fee must be submitted with this petition.

STATEMENT
THE UNDERSIGNED CERTIFIES THAT THE DELAY IN PAYMENT OF THE MAINTENANCE FEE TO THIS PATENT WAS UNINTENTIONAL

PETITIONER(S) REQUEST THAT THE DELAYED PAYMENT OF THE MAINTENANCE FEE BE ACCEPTED AND THE PATENT REINSTATED

THIS PORTION MUST BE COMPLETED BY THE SIGNATORY OR SIGNATORIES

37 CFR 1.378(d) states: "Any petition under this section must be signed by an attorney or agent registered to practice before the Patent and Trademark Office, or by the patentee, the assignee, or other party in interest."

I certify, in accordance with 37 CFR 1.4(d)(4) that I am

◉ An attorney or agent registered to practice before the Patent and Trademark Office

○ A sole patentee

○ A joint patentee; I certify that I am authorized to sign this submission on behalf of all the other patentees.

○ A joint patentee; all of whom are signing this e-petition

○ The assignee of record of the entire interest

Under the Paperwork Reduction Act of 1995, no persons are required to respond to a collection of information unless it displays valid OMB control number.

Patent Practitioner			
A signature of the applicant or representative is required in accordance with 37 CFR 1.33 and 10.18. Please see 37 CFR 1.4(d) for the form of the signature			
Signature	/James C. Lydon/	Date (YYYY-MM-DD)	2010-11-11
Name	James C. Lydon	Registration Number	30082

This collection of information is required by 37 CFR 1.378(c). The information is required to obtain or retain a benefit by the public which is to file (and by the USPTO to process) an application. Confidentiality is governed by 35 U.S.C. 122 and 37 CFR 1.11 and 1.14. This collection is estimated to take 1 hour to complete, including gathering, preparing, and submitting the completed application form to the USPTO. Time will vary depending upon the individual case. Any comments on the amount of time you require to complete this form and/ or suggestions for reducing this burden, should be sent to the Chief Information Officer, U.S. Patent and Trademark Office, U.S. Department of Commerce, P.O. Box 1450, Alexandria, VA 22313-1450. DO NOT SEND FEES OR COMPLETED FORMS TO THIS ADDRESS. **This form can only be used when in conjunction with EFS-Web. If this form is mailed to the USPTO, it may cause delays in reinstating the patent.**

Privacy Act Statement

The Privacy Act of 1974 (P.L. 93-579) requires that you be given certain information in connection with your submission of the attached form related to a patent application or patent. Accordingly, pursuant to the requirements of the Act, please be advised that: (1) the general authority for the collection of this information is 35 U.S.C. 2(b)(2); (2) furnishing of the information solicited is voluntary; and (3) the principal purpose for which the information is used by the U.S. Patent and Trademark Office is to process and/or examine your submission related to a patent application or patent. If you do not furnish the requested information, the U.S. Patent and Trademark Office may not be able to process and/or examine your submission, which may result in termination of proceedings or abandonment of the application or expiration of the patent.

The information provided by you in this form will be subject to the following routine uses:

1. The information on this form will be treated confidentially to the extent allowed under the Freedom of Information Act (5 U.S.C. 552) and the Privacy Act (5 U.S.C. 552a). Records from this system of records may be disclosed to the Department of Justice to determine whether the Freedom of Information Act requires disclosure of these records.

2. A record from this system of records may be disclosed, as a routine use, in the course of presenting evidence to a court, magistrate, or administrative tribunal, including disclosures to opposing counsel in the course of settlement negotiations.

3. A record in this system of records may be disclosed, as a routine use, to a Member of Congress submitting a request involving an individual, to whom the record pertains, when the individual has requested assistance from the Member with respect to the subject matter of the record.

4. A record in this system of records may be disclosed, as a routine use, to a contractor of the Agency having need for the information in order to perform a contract. Recipients of information shall be required to comply with the requirements of the Privacy Act of 1974, as amended, pursuant to 5 U.S.C. 552a(m).

5. A record related to an International Application filed under the Patent Cooperation Treaty in this system of records may be disclosed, as a routine use, to the International Bureau of the World Intellectual Property Organization, pursuant to the Patent Cooperation Treaty.

6. A record in this system of records may be disclosed, as a routine use, to another federal agency for purposes of National Security review (35 U.S.C. 181) and for review pursuant to the Atomic Energy Act (42 U.S.C. 218(c)).

7. A record from this system of records may be disclosed, as a routine use, to the Administrator, General Services, or his/her designee, during an inspection of records conducted by GSA as part of that agency's responsibility to recommend improvements in records management practices and programs, under authority of 44 U.S.C. 2904 and 2906. Such disclosure shall be made in accordance with the GSA regulations governing inspection of records for this purpose, and any other relevant (i.e., GSA or Commerce) directive. Such disclosure shall not be used to make determinations about individuals.

8. A record from this system of records may be disclosed, as a routine use, to the public after either publication of the application pursuant to 35 U.S.C. 122(b) or issuance of a patent pursuant to 35 U.S.C. 151. Further, a record may be disclosed, subject to the limitations of 37 CFR 1.14, as a routine use, to the public if the record was filed in an application which became abandoned or in which the proceedings were terminated and which application is referenced by either a published application, an application open to public inspections or an issued patent.

9. A record from this system of records may be disclosed, as a routine use, to a Federal, State, or local law enforcement agency, if the USPTO becomes aware of a violation or potential violation of law or regulation.

UNITED STATES PATENT AND TRADEMARK OFFICE

Commissioner for Patents
United States Patent and Trademark Office
P.O. Box 1450
Alexandria, VA 22313-1450
www.uspto.gov

In re Patent No. 7112297
Issue Date: September 26,2006
Application No. 10697302
Filed: October 31,2003
Attorney Docket No. AQUA-018-A

:
:DECISION GRANTING PETITION
:UNDER 37 CFR 1.378(c)
:

This is a decision on the electronic petition, filed November 11,2010 ,under 37 CFR 1.378(c) to accept the unintentionally delayed payment of the 3.5 year maintenance fee for the above-identified patent.

The petition is **GRANTED**.

The maintenance fee is accepted, and the above-identified patent reinstated as of November 11,2010 . This decision also constitutes notice that the fee has been accepted. An electronic copy of the petition and this decision has been created as an entry in the Image File Wrapper. Nevertheless, petitioner should print and retain an independent copy.

Telephone inquiries related to this electronic decision should be directed to the Electronic Business Center at 1-866-217-9197.

UNITED STATES PATENT AND TRADEMARK OFFICE

Commissioner for Patents
United States Patent and Trademark Office
P.O. Box 1450
Alexandria, VA 22313-1450
www.uspto.gov

Inverness Medical Innovations / WSGR
Wilson Sonsini Goodrich & Rosati, P.C.
650 Page Mill Road
Palo Alto CA 94304

MAILED
SEP 27 2010
OFFICE OF PETITIONS

In re Application of Buechler Application No. 10/697,351 Filed: October 29, 2003 Attorney Docket No. 36671-716.302 Title: DIAGNOSTIC DEVICES AND APPARATUS FOR THE CONTROLLED MOVEMENT OF REAGENTS WITHOUT MEMBRANES	ON APPLICATION FOR PATENT TERM ADJUSTMENT

This is a decision on the "REQUEST FOR RECONSIDREATION OF THE PATENT TERM ADJUSTMENT AND APPLICATION FOR PATENT TERM ADJUSTMENT UNDER 37 CFR §1.705," filed February 5, 2010. This request is properly treated under 37 CFR 1.705(b). Applicant submits dispute the 316 day reduction.

The application for patent term adjustment is **GRANTED**.

The $200.00 petition fee set forth in 37 CFR 1.18(e) has been assessed from deposit account no. 23-2415. No additional fees are required.

The Office has updated the PAIR screen to reflect that the correct Patent Term Adjustment (PTA) determination at the time of the mailing of the Notice of Allowance is one hundred ninety-two **(192)** days. A copy of the updated PAIR screen, showing the correct determination, is enclosed.

Applicant disputes the 316 day reduction. Applicant contends that the reduction based upon the submission of the Request for Continued Examination (RCE) and the information Disclosure Statement filed on August 5, 2008. Applicant submits no reduction is warranted.

The application history has been reviewed and it has been determined that reduction of 316 days will be removed.

Applicant's delay prior to the mailing of the Notice of Allowance is 115 (31 + 84) days. Office delay prior to the mailing of the Notice of Allowance is 307 days.

In view thereof, it is concluded that the determination of patent term adjustment at the time of the mailing of the Notice of Allowance is one hundred ninety-two (192) days.

Any request for reconsideration of the patent term adjustment indicated on the patent must be timely filed within 2 months after issuance pursuant to 37 CFR 1.705(d) and must include payment of the required fee under 37 CFR 1.18(e).

The Office of Data Management has been advised of this decision. This matter is being referred to the Office of Data Management for issuance of the patent.

Telephone inquiries specific to this matter should be directed to Petitions Attorney Charlema Grant, at (571) 272-3215.

Anthony Knight
Director
Office of Petitions

Enclosure: Copy of REVISED PALM Screen

Patent Term Adjustments

PTA/PTE Information | Patent Term Adjustment | Patent Term Extension

Application Number*: 10697351 Search Explanation of PTA Calculation Explanation of PTE Calculation

PTA Calculations for Application: 10697351

Application Filing Date	10/29/2003	OverLapping Days Between (A and B) or (A and C)	0
Issue Date of Patent		Non-Overlapping USPTO Delays:	307
A Delays	307	PTO Manual Adjustment	316
B Delays	0	Applicant Delay (APPL)	431
C Delays	0	Total PTA (days)	192

* - Sorted Column

File Contents History

Action Number	Action Recorded Date	Action Due Date	Action Code	Action Description	Duration PTO	Duration APPL	Parent Action Number
159	09/25/2010		P020	Adjustment of PTA Calculation by PTO	316	0	
150	12/24/2009		MN/=.	Mail Notice of Allowance		0	
149	12/21/2009		IREV	Issue Revision Completed		0	
148	12/20/2009		ACRE	Allowed Case Returned to the Examiner for Clerical Processing		0	
147	12/20/2009		DVER	Document Verification		0	
145	12/20/2009		N/=.	Notice of Allowance Data Verification Completed		0	
144	12/09/2009		CNTA	Notice of Allowability		0	
146	12/04/2009		EXIN	Examiner Interview Summary Record (PTOL - 413)		0	
138	11/17/2009		MCTAV	Mail Advisory Action (PTOL - 303)		0	
137	11/13/2009		CTAV	Advisory Action (PTOL-303)		0	
136	11/10/2009		FWDX	Date Forwarded to Examiner		0	
135	11/09/2009		A.NE	Amendment after Final Rejection		0	
134	09/16/2009		MCTFR	Mail Final Rejection (PTOL - 326)		0	
133	09/14/2009		CTFR	Final Rejection		0	
130	07/27/2009		PS74	Paralegal TD Accepted		0	
129	07/27/2009		PS74	Paralegal TD Accepted		0	
128	07/27/2009		PS74	Paralegal TD Accepted		0	
127	07/27/2009		PS74	Paralegal TD Accepted		0	
126	07/27/2009		PS74	Paralegal TD Accepted		0	
125	07/27/2009		PS74	Paralegal TD Accepted		0	
124	07/27/2009		PS74	Paralegal TD Accepted		0	
123	07/27/2009		PS74	Paralegal TD Accepted		0	
122	07/27/2009		PS74	Paralegal TD Accepted		0	
121	07/07/2009		FWDX	Date Forwarded to Examiner		0	
119	07/07/2009		FWDX	Date Forwarded to Examiner		0	
117	07/07/2009		ABN9	Disposal for a RCE / CPA / R129		0	
132	07/02/2009		IDSC	Information Disclosure Statement considered		0	
120	07/02/2009		AMSB	Amendment Submitted/Entered with Filing of CPA/RCE		0	
118	07/02/2009	04/09/2009	RCEX	Request for Continued Examination (RCE)	84	109	
116	07/02/2009		DIST	Terminal Disclaimer Filed		0	
115	07/02/2009		DIST	Terminal Disclaimer Filed		0	
114	07/02/2009		RCAP	Reference capture on IDS		0	
113	07/02/2009		M844	Information Disclosure Statement (IDS) Filed		0	
112	07/02/2009		XT/G	Request for Extension of Time - Granted		0	
111	07/02/2009		WIDS	Information Disclosure Statement (IDS) Filed		0	
110	07/02/2009		BRCE	Workflow - Request for RCE - Begin		0	
89	02/05/2009		MAPDS	Appeal Dismissed - Mailed		0	
88	02/04/2009		APDS	Appeal Dismissed		0	
109	01/09/2009		MCTNF	Mail Non-Final Rejection		0	
108	01/07/2009		CTNF	Non-Final Rejection		0	
105	11/06/2008		FWDX	Date Forwarded to Examiner		0	
101	11/06/2008		FWDX	Date Forwarded to Examiner		0	
99	11/06/2008		ABN9	Disposal for a RCE / CPA / R129		0	
107	11/05/2008		IDSC	Information Disclosure Statement considered		0	
106	11/05/2008		WIDS	Information Disclosure Statement (IDS) Filed		0	
104	11/05/2008		AMSB	Amendment Submitted/Entered with Filing of CPA/RCE		0	
103	11/05/2008		RCAP	Reference capture on IDS		0	
102	11/05/2008		M844	Information Disclosure Statement (IDS) Filed		0	
100	11/05/2008		RCEX	Request for Continued Examination (RCE)		0	
98	11/05/2008		BRCE	Workflow - Request for RCE - Begin		0	
97	10/09/2008		MCTFR	Mail Final Rejection (PTOL - 326)		0	
96	10/07/2008		CTFR	Final Rejection		0	
92	08/07/2008		FWDX	Date Forwarded to Examiner		0	
90	08/07/2008		ABN9	Disposal for a RCE / CPA / R129		0	
95	08/05/2008		IDSC	Information Disclosure Statement considered		0	
94	08/05/2008		RCAP	Reference capture on IDS		0	
93	08/05/2008	09/24/2007	M844	Information Disclosure Statement (IDS) Filed	316	49	
91	08/05/2008		RCEX	Request for Continued Examination (RCE)		0	
63	08/05/2008		WIDS	Information Disclosure Statement (IDS) Filed		0	
62	08/05/2008		BRCE	Workflow - Request for RCE - Begin		0	
61	07/28/2008		C.ADB	Correspondence Address Change		0	
60	07/17/2008		APWH	Waiver of Hearing by Appellant		0	
59	06/26/2008		APNH	Notification of Appeal Hearing		0	
57	05/12/2008		AP_DK_M	Docketing Notice Mailed to Appellant		0	
56	05/12/2008		APAS	Assignment of Appeal Number		0	
55	04/22/2008		PA..	Change in Power of Attorney (May Include Associate POA)		0	
54	04/21/2008		C.AD	Correspondence Address Change		0	
53	04/15/2008		APWD	Appeal Awaiting BPAI Docketing		0	
52	12/13/2007		MRBNE	Mail Reply Brief Noted by Examiner		0	
51	12/10/2007		RBNE	Reply Brief Noted by Examiner		0	
50	10/10/2007		FWDX	Date Forwarded to Examiner		0	
47	10/05/2007		DOCK	Case Docketed to Examiner in GAU		0	
49	09/24/2007		APRB	Reply Brief Filed		0	
48	09/24/2007		APOH	Request for Oral Hearing		0	
46	09/12/2007		PACC	Exam. Ans. Review Complete		0	
45	08/17/2007		MAPEA	Mail Examiner's Answer		0	
44	08/16/2007		APEA	Examiner's Answer to Appeal Brief		0	
41	06/05/2007		APBR	Appeal Brief Review Complete		0	
40	06/05/2007		FWDX	Date Forwarded to Examiner		0	
39	04/25/2007		AP.B	Appeal Brief Filed		0	
38	04/25/2007		XT/G	Request for Extension of Time - Granted		0	
37	03/05/2007		MCTAV	Mail Advisory Action (PTOL - 303)		0	
36	03/05/2007		CTAV	Advisory Action (PTOL-303)		0	
35	03/01/2007		FWDX	Date Forwarded to Examiner		0	
33	02/09/2007		MCTAV	Mail Advisory Action (PTOL - 303)		0	
32	02/08/2007		CTAV	Advisory Action (PTOL-303)		0	
31	02/02/2007		FWDX	Date Forwarded to Examiner		0	

30	01/25/2007		AP/A	Amendment/Argument after Notice of Appeal			0
29	01/25/2007		N/AP	Notice of Appeal Filed			0
28	10/25/2006		MCTFR	Mail Final Rejection (PTOL - 326)			0
27	10/24/2006		CTFR	Final Rejection			0
26	08/15/2006		FWDX	Date Forwarded to Examiner			0
25	08/07/2006	07/07/2006	A...	Response after Non-Final Action		31	23
24	08/07/2006		XT/G	Request for Extension of Time - Granted			0
23	04/07/2006		MCTNF	Mail Non-Final Rejection			0
22	04/05/2006		CTNF	Non-Final Rejection			0
34	02/27/2006		AP/A	Amendment/Argument after Notice of Appeal			0
20	02/02/2006		FWDX	Date Forwarded to Examiner			0
18	02/02/2006		FWDX	Date Forwarded to Examiner			0
16	02/02/2006		ABN9	Disposal for a RCE / CPA / R129			0
19	01/27/2006		AMSB	Amendment Submitted/Entered with Filing of CPA/RCE			0
17	01/27/2006		RCEX	Request for Continued Examination (RCE)			0
15	01/27/2006		BRCE	Workflow - Request for RCE - Begin			0
14	11/01/2005	12/29/2004	MCTFR	Mail Final Rejection (PTOL - 326)	307		-1
13	10/28/2005		CTFR	Final Rejection			0
12	10/13/2005		DOCK	Case Docketed to Examiner in GAU			0
11	02/25/2004		TSSCOMP	IFW TSS Processing by Tech Center Complete			0
5	01/16/2004		COMP	Application Is Now Complete			0
8	01/15/2004		WROIPE	Application Return from OIPE			0
7	01/15/2004		ROIPE	Application Return TO OIPE			0
6	01/15/2004		OIPE	Application Dispatched from OIPE			0
21	01/12/2004		IDSC	Information Disclosure Statement considered			0
10	01/12/2004		RCAP	Reference capture on IDS			0
9.7	01/12/2004		M844	Information Disclosure Statement (IDS) Filed			0
9	01/12/2004		WIDS	Information Disclosure Statement (IDS) Filed			0
4	12/23/2003		L194	Cleared by OIPE CSR			0
3	12/23/2003		CLSS	CASE CLASSIFIED BY OIPE			0
2	12/18/2003		SCAN	IFW Scan & PACR Auto Security Review			0
1	10/29/2003		IEXX	Initial Exam Team nn			0

Export to: Excel

UNITED STATES PATENT
AND TRADEMARK OFFICE

Commissioner for Patents
United States Patent and Trademark Office
P.O. Box 1450
Alexandria, VA 22313-1450
www.uspto.g

Date Mailed :April 18,2011
Patent No. : 7,824,611 B2
Ser. No. :10/697351
Issued November 2, 2010
Inventor(s) : Kenneth F. Buchler
Title : DIAGNOSTIC DEVICES AND APPARATUS FOR THE CONTROLLED MOVEMENT OF REAGENTS WITHOUT MEMBRANES

Request for Certificate of Correction

Consideration has been given your request for the issuance of a certificate of correction for the above-identified patent under the provisions of Rule(s) 1.322 and/or 1.323.

Assignees' names and addresses (assignment data, attorney agent/firm) printed in a patent, are based *solely* on information supplied in the appropriate space for identifying the assignment data, i.e., item 3 of the Issue Fee Transmittal Form PTOL-85B. Granting of a request under 37 CFR 3.81(b) is required to correct applicant's error providing ***incorrect or erroneous*** assignment data, *before* issuance of a Certificate of Correction, under 37 CFR 1.323 *(see Manual of Patent Examining Procedures (M.P.E.P) Chp.1400, sect. 1481).* This procedure is required *at any time after the issue fee is paid*, including after issuance of the patent.

In view of the foregoing, your request is hereby denied.

A request to correct the Assignee under 37 CFR 3.81(b) should include:

A. **the processing fee set forth in 37 CFR 1.17(h) (currently $130);**
B. a statement that the failure to include the correct assignee name on the PTOL-85B was inadvertent; and
C. a copy of the Notice of Recordation of Assignment Document, reflecting the reel and frame number where the assignment(s) is recorded and/or reflecting proof of *the date* the assignment was submitted for recordation.

In the Request, Applicant(s) may request that the file be forwarded to Certificates of Correction Branch, for issuance of a Certificate of Correction, if the Request is granted.

Any request under 37 CFR 3.81(b) should be directed to the following address or facsimile number:

By mail: Mail Stop PETITIONS
Commissioner for Patents
Post Office Box 1450
Alexandria, VA 22313-1450

By hand: Customer Service Window
Mail Stop Petitions
Randolph Building
401 Dulany Street
Alexandria, VA 22314

By fax: (571) 273-0025
ATTN: Office of Petitions

If a fee (currently $100) was previously submitted for consideration of a Request for Certificate of Correction, under CFR 1.323, to correct assignment data, no additional fee is required.

Magdalene Talley
For Mary F. Diggs, Supervisor
Decisions & Certificates
of Correction Branch
(571) 272-0423

Wilson Sonsini Goodrich & Rosati
650 Page Mill Road
Palo Alto, CA 94304

MD/mt

UNITED STATES PATENT AND TRADEMARK OFFICE

Commissioner for Patents
United States Patent and Trademark Office
P.O. Box 1450
Alexandria, VA 22313-1450
www.uspto.gov

INVERNESS MEDICAL INNOVATIONS/WSGR
WILSON SONSINI GOODRICH & ROSATI, P.C.
650 PAGE MILL ROAD
PALO ALTO CA 94304

MAILED

JUL 18 2011

OFFICE OF PETITIONS

In re Patent No. 7,824,611 :
Issue Date: November 2, 2010 :
Application No. 10/697,351 : ON PETITION
Filed: October 29, 2003 :
Attorney Docket No. 36671-716.302 :

This is a decision on the paper filed May 11, 2011, which is being treated as a petition under 37 CFR 3.81(b) to correct the name of the assignee on the front page of the above-identified patent by way of a certificate of correction.

The petition is **DISMISSED**.

Petitioner requests issuance of a certificate of correction in the name of "ALERE SAN DIEGO, INC., San Diego, CA (US)."

37 CFR 3.81(b), effective June 25, 2004, reads:

> *After payment of the issue fee:* Any request for issuance of an application in the name of the assignee submitted after the date of payment of the issue fee, and any request for a patent to be corrected to state the name of the assignee, must state that the assignment was submitted for recordation as set forth in § 3.11 **before issuance of the patent**, and must include a request for a certificate of correction under § 1.323 of this chapter (accompanied by the fee set forth in § 1.20(a) and the processing fee set forth in § 1.17(i) of this chapter [emphasis added]. *See also* MPEP 1481.01.

U.S. Patent and Trademark Office assignment records disclose that an assignment to "ALERE SAN DIEGO, INC., SAN DIEGO, CA (US)." was recorded on **March 10, 2011**. Accordingly, issuance of a certificate of correction would not be proper for "ALERE SAN DIEGO, INC., SAN DIEGO, CA (US)."

Telephone inquiries concerning this decision on petition should be directed to the undersigned at (571) 272-3208.

/KOC/
Karen Creasy
Petitions Examiner
Office of Petitions

UNITED STATES PATENT AND TRADEMARK OFFICE

Commissioner for Patents
United States Patent and Trademark Office
P.O. Box 1450
Alexandria, VA 22313-1450
www.uspto.gov

MAILED
AUG 23 2011
OFFICE OF PETITIONS

QUALCOMM INCORPORATED
5775 MOREHOUSE DR.
SAN DIEGO CA 92121

In re Application of	:	
Lundblade	:	DECISION ON APPLICATION
Application No. 10/697,397	:	FOR PATENT TERM ADJUSTMENT
Filed: October 29, 2003	:	
Attorney Docket No. **030457**	:	

This is a decision on the "REQUEST FOR RECOSNDIERATION OF PATENT TERM ADJUSTMENT UNDER 37 C.F.R. § 1.705(b)" filed August 15, 2011. Applicants request that the initial determination of patent term adjustment under 35 U.S.C. 154(b) be corrected from 585 days to 704 days.

The application for patent term adjustment is **DISMISSED**.

On May 13, 2011, the Office mailed the Determination of Patent Term Adjustment under 35 U.S.C. 154(b) in the above-identified application. The Notice stated that the patent term adjustment (PTA) to date is 585 days. On August 15, 2011, applicants timely submitted the instant application for patent term adjustment[1].

By the instant petition, applicant asserts that the patent term should be adjusted by 119 days, pursuant to 37 CFR 1.702(a)(2). In summary, applicant asserts that the Notice of Allowance and Issue Fee Due mailed October 9, 2009, was effectively withdrawn by the examiner by the issuance of a non-final Office action on May 14, 2010, that indicated it was responsive to the reply filed September 15, 2009. Applicant concludes that the period of adjustment to the patent term under 37 CFR 1.702(a)(2) is properly calculated using the May 14, 2010, non-final Office action, rather than the October 9, 2009, Notice of Allowance and Issue Fee Due.

[1] The Office records show that the issue fee was received on August 15, 2011.

Applicant's arguments have been considered but are not persuasive. It is concluded that no period of adjustment for Office delay pursuant to 37 CFR 1.702(a)(2) is warranted.

It is undisputed that the Office mailed an action under 35 U.S.C. 132 in the form of a Notice of Allowance and Issue Fee Due on October 9, 2009, within four months of the reply under 37 CFR 1.111 filed September 15, 2009. The subsequent mailing of another Office action under 35 U.S.C. 132 does not alter the date used in calculation of the period of adjustment. Pursuant to 35 U.S.C. 154(b)(1)(A)(ii), applicants are only entitled to day-to-day restoration of term lost as a result of delay created by the Office, after four months from the filing of the reply under 37 CFR 1.111 or appeal taken. The fact that the Office later mailed a non-final Office action does not negate the fact that the Office took action within the meaning of 37 CFR 1.702(a)(2) on October 9, 2010. Further, relative to the determination of patent term adjustment, the examiner does not have the authority to vacate, rescind, or withdraw an Office action. Unless expunged from the record, for purposes of calculating patent term adjustment, the action originally mailed by the examiner on August 24, 2009, was properly used to calculate the adjustment to the patent term, if any, pursuant to 37 CFR 1.702(a)(2) and 37 CFR 1.703(a)(2). See Changes to Implement Patent Term Adjustment under Twenty-Year Patent Term; Final Rule, 65 Fed. Reg. 54366 (September 18, 2000). Accordingly, no period of adjustment to the patent term pursuant to 37 CFR 1.702(a)(2) will be entered.

In view thereof, the patent term adjustment at the time of the mailing of the notice of allowance remains 585 days.

Deposit account 17-0026 will be charged $200.00 for the fee set forth in 37 CFR 1.18(e). No additional fees are required.

The application file is being forwarded to the Office of Data Management for issuance of the patent. The patent term adjustment indicated on the patent (as shown on the Issue Notification mailed about three weeks prior to patent issuance) will include any additional adjustment accrued both for Office delay in issuing the patent more than four months after payment of the issue fee and satisfaction of all outstanding requirements, and for the Office taking in excess of three years

to issue the patent (to the extent that the three-year period does not overlap with periods already accorded[1]).

Telephone inquiries specific to this matter should be directed to the undersigned (571) 272-3222.

/Kenya A. McLaughlin/

Kenya A. McLaughlin
Attorney Advisor
Office of Petitions

[1] See 35 U.S.C. 154(b)(1)(B), 35 U.S.C. 154(b)(2)(A), and 37 CFR ' 1.703(f). See also Revision of Patent Term Extension and Patent Term Adjustment Provisions; Final Rule, 69 Fed. Reg. 21704 (April 22, 2004).

UNITED STATES PATENT AND TRADEMARK OFFICE

Commissioner for Patents
United States Patent and Trademark Office
P.O. Box 1450
Alexandria, VA 22313-1450
www.uspto.gov

Paper No.

OBLON, SPIVAK, MCCLELLAND MAIER & NEUSTADT, L.L.P.
1940 DUKE STREET
ALEXANDRIA VA 22314

MAILED
JUN 06 2011
OFFICE OF PETITIONS

In re Application of	:	
G. Michael Higgins	:	DECISION ON PETITION
Application No. 10/697,410	:	PURSUANT TO
Filed: October 30, 2003	:	37 C.F.R. § 1.182
Attorney Docket No. 339693US28	:	
Title: AUTOMATED SYSTEM AND METHOD	:	
FOR EVALUATING INSURABLE RISKS AT	:	
POINT OF SALE	:	

This is in response to the petition filed on March 24, 2004, pursuant to 37 C.F.R. § 1.182, requesting a change of the name of the inventor. Specifically, Petitioner has requested that "Michael G. Higgins" be changed to "G. Michael Higgins."

This petition is **DISMISSED as unnecessary.**

This application was filed on October 30, 2003 along with, *inter alia*, an unsigned declaration which identified the sole inventor as "Michael G. Higgins." A Notice to File Corrected Application Papers was mailed on January 29, 2004, which required, *inter alia*, a new oath or declaration. An executed declaration was submitted on March 24, 2004 concurrently with this petition, which identifies the sole inventor as "G. Michael Higgins." Pursuant to 37 C.F.R. § 1.48(f)(1), inventorship is set by the first submission of an executed declaration. As such, Office records were updated to reflect that the sole inventor is "G. Michael Higgins," and this petition is not required.

The $130 petition fee will be refunded via the mailing of a Treasury Check in due course.

The Technology Center will be notified of this decision, and jurisdiction over this application is transferred to the Technology Center, so that the application may receive further processing. The Technology Center's support staff will notify

the Examiner of this decision, so that the present application can receive further processing in due course.

Telephone inquiries regarding *this decision* should be directed to the undersigned at (571) 272-3225.[1] All other inquiries concerning examination procedures or status of the application should be directed to the Technology Center.

/Paul Shanoski/
Paul Shanoski
Senior Attorney
Office of Petitions

cc: Barnes & Thornburg
600 One Summit Square
Fort Wayne, Indiana 46802

[1] Petitioner will note that all practice before the Office should be in writing, and the action of the Office will be based exclusively on the written record in the Office. See 37 C.F.R. § 1.2. As such, Petitioner is reminded that no telephone discussion may be controlling or considered authority for Petitioner's further action(s).

UNITED STATES PATENT AND TRADEMARK OFFICE

Commissioner for Patents
United States Patent and Trademark Office
P.O. Box 1450
Alexandria, VA 22313-1450
www.uspto.gov

FISH & RICHARDSON P.C. (TC)
PO BOX 1022
MINNEAPOLIS MN 55440-1022

MAILED

JAN 19 2011

OFFICE OF PETITIONS

In re Application of	:	
Andrew Schydlowsky	:	DECISION ON PETITION
Application No. 10/697,767	:	TO WITHDRAW
Filed: October 30, 2003	:	FROM RECORD
Attorney Docket No. 15651-002001	:	

This is a decision on the Request to Withdraw as attorney or agent of record under 37 C.F.R. § 1.36(b), filed December 13, 2010.

The request is **NOT APPROVED**.

The Office will only accept correspondence address changes to the most current address information provided for the assignee of the entire interest *who properly became of record under 37 CFR 3.71,* or, if no assignee of the entire interest has properly been made of record, the most current address information provided for the first named inventor. 37 CFR 3.71(c) states:

> ***An assignee becomes of record either in a national patent application or a reexamination proceeding by filing a statement in compliance with § 3.73(b) that is signed by a party who is authorized to act on behalf of the assignee.***

Therefore, as there is currently no Statement under 37 CFR 3.73(b) of record in the instant application, the Office cannot change the correspondence address to the address on the Request to Withdraw.

All future communications from the Office will continue to be directed to the above-listed address until otherwise notified by applicant.

Currently, there is an outstanding Office action mailed November 22, 2010 that requires a reply.

Telephone inquires concerning this decision should be directed to the undersigned at (571) 272-7751.

Joan Olszewski
Petitions Examiner
Office of Petitions

UNITED STATES PATENT AND TRADEMARK OFFICE

Commissioner for Patents
United States Patent and Trademark Office
P.O. Box 1450
Alexandria, VA 22313-1450
www.uspto.gov

MARSHALL, GERSTEIN & BORUN, LLP (MARVELL)
233 SOUTH WACKER DRIVE
6300 WILLIS TOWER
CHICAGO IL 60606-6357

MAILED
APR 11 2011
OFFICE OF PETITIONS

In re US Patent : 7,428,260 :
Issue Date: September 23, 2008 :
Applicant/Patentee: YELLIN, Daniel : ON PETITION
Application No.: 10/697,853 :
Filing Date: October 30, 2003 :
Attorney Docket No. P16075 :

This is a decision in response to the Petition under 37 CFR 1.181, filed August 31, 2010, requesting "that the Power of Attorney granted by the Office on July 28, 2010 to CPA Global (59796) be revoked and restored to Marshall Gerstein & Borun LLP-Marvell (64768). No petition fee is required.

The petition is **GRANTED**.

A review of United States Patent and Trademark Office (USPTO) records, including the content of the official patented filed and recorded assignments, reveals that the USPTO erred in it's acceptance of the third party Revocation and Power of Attorney Certificate under 37 CFR § 3.373(b)", filed July 15, 2010. As such, it is appropriate to grant the present petition.

The Notice of Acceptance of Power of Attorney and the Notice Regarding Change of Power of Attorney, both mailed contemporaneously on July 28, 2010 are hereby **VACATED**. The Power of Attorney to the attorneys and/or agents associated with Customer Number 64768 has been **RESTORED**. The correspondence address has likewise been restored to the address identified above.

The July 15, 2010 third party Revocation and Power of Attorney and the USPTO Notices of July 28, 2010 have each been closed, i.e., the document is no longer available to the public for inspection, which is the Image File Wrapper (IFW) equivalent to removal of a paper document from a paper file wrapper.

Telephone inquiries related to this decision may be directed to the Brian W. Brown at (571) 272-5338.

Brian W. Brown
Petitions Examiner
Office of Petitions

UNITED STATES PATENT AND TRADEMARK OFFICE

Commissioner for Patents
United States Patent and Trademark Office
P.O. Box 1450
Alexandria, VA 22313-1450
www.uspto.gov

MOMENTIVE PERFORMANCE MATERIALS INC.
C/O DILWORTH & BARRESE, LLP
1000 WOODBURY ROAD
SUITE 405
WOODBURY NY 11797

MAILED
MAY 09 2011
OFFICE OF PETITIONS

In re Application of	:	
Glatzer, et al.	:	
Application No. 10/697,919	:	DECISION
Filed: 30 October, 2003	:	
Attorney Docket No. US 142759-2	:	

This is a decision on the petition filed on 14 March, 2011, for revival of an application abandoned due to unintentional delay pursuant to 37 C.F.R. §1.137(b) .

The petition pursuant to 37 C.F.R. §1.137(b) is **DISMISSED**.

Any request for reconsideration of this decision must be submitted within TWO (2) MONTHS from the mail date of this decision. Extensions of time under 37 C.F.R. §1.136(a) are permitted. The reconsideration request should include a cover letter entitled "Renewed Petition under 37 C.F.R. §1.137(b)."

This is **not** a final agency action within the meaning of 5 U.S.C. §704.

As to the Allegations
of Unintentional Delay

The requirements of a grantable petition pursuant to 37 C.F.R. §1.137(b) are the petition and fee therefor, a reply, a proper statement and/or showing of unintentional delay under the regulation, and, where applicable, a terminal disclaimer and fee

Petitioner does not appear to have satisfied the requirements under the Rule.

Petitioners' attentions always are directed to the guidance in the Commentary at MPEP §711.03(c)(II).

BACKGROUND

Petitioner failed to reply timely and properly to the Notice of Allowance/Allowability mailed on 4 December, 2006, with reply due under a non-extendable deadline on or before Monday, 5 March, 2007.

The application went abandoned by operation of law after midnight 5 March, 2007.

The Office mailed the Notice of Abandonment on 5 April, 2007.

On 14 March, 2011, Petitioner filed, *inter alia*, a petition pursuant to 37 C.F.R. §1.137(b), with fee, with a statement of unintentional delay and a reply in the form of a request for continued examination (RCE) and fee and a submission under the provisions of 37 C.F.R. §1.114 in the form of an information disclosure statement. However, it appears that, despite the extended period of abandonment—more than four (4) years—Petitioner has made no showing in support of the averment of unintentional delay.

Petitioners' attentions always are directed to the guidance in the Commentary at MPEP §711.03(c) as to the showing regarding unintentional delay and a petition pursuant to 37 C.F.R. §1.137(b).

Petitioner has failed to satisfy the requirements under the Rule and discussed above.

The availability of applications and application papers online to applicants/practitioners who diligently associate their Customer Number with the respective application(s) now provides an applicant/practitioner on-demand information as to events/transactions in an application.

Out of an abundance of caution, Petitioners always are reminded that those registered to practice and all others who make representations before the Office **must** inquire into the underlying facts of representations made to the Office and support averments with the appropriate documentation–since all owe to the Office the continuing duty to disclose.[1]

STATUTES, REGULATIONS AND ANALYSIS

Congress has authorized the Commissioner to "revive an application if the delay is shown to the satisfaction of the Commissioner to have been "unavoidable." 35 U.S.C. §133 (1994).[2]

---

[1] See supplement of 17 June, 1999. The Patent and Trademark Office is relying on petitioner's duty of candor and good faith and accepting a statement made by Petitioner. See Changes to Patent Practice and Procedure, 62 Fed. Reg. at 53160 and 53178, 1203 Off. Gaz. Pat. Office at 88 and 103 (responses to comments 64 and 109)(applicant obligated under 37 C.F.R. §10.18 to inquire into the underlying facts and circumstances when providing statements to the Patent and Trademark Office).

[2] 35 U.S.C. §133 provides:

35 U.S.C. §133 Time for prosecuting application.

Upon failure of the applicant to prosecute the application within six months after any action therein, of which notice has been given or mailed to the applicant, or within such shorter time, not less than thirty days, as fixed by the Commissioner in such action, the application shall be regarded as abandoned by the parties thereto, unless it be shown to the satisfaction of the Commissioner that such delay was unavoidable.

The regulations at 37 C.F.R. §1.137(a) and (b) set forth the requirements for a Petitioner to revive a previously unavoidably or unintentionally, respectively, abandoned application under this congressional grant of authority.

Unintentional delays are those that do not satisfy the very strict statutory and regulatory requirements of unavoidable delay, and also, by definition, are not intentional.[3])

Again, Petitioner's attentions are directed to the guidance in the Commentary at MPEP §711.03(c).

As to the Allegations
of Unintentional Delay

The requirements of a grantable petition pursuant to 37 C.F.R. §1.137(b) are the petition and fee therefor, a reply, a proper statement and/or showing of unintentional delay under the regulation, and, where applicable, a terminal disclaimer and fee

As of this writing it appears that Petitioner has failed to satisfy the requirements under the Rule.

CONCLUSION

Accordingly, the petition under 37 C.F.R. §1.137(b) is **dismissed**.

Further correspondence with respect to this matter should be addressed as follows:

By Mail: Mail Stop PETITION
Commissioner for Patents
P. O. Box 1450
Alexandria, VA 22313-1450

By hand: U. S. Patent and Trademark Office
Customer Service Window, Mail Stop Petitions
Randolph Building
401 Dulany Street
Alexandria, VA 22314

By facsimile: **(571) 273-8300**
Attn: Office of Petitions

[3] Therefore, by example, an unintentional delay in the reply might occur if the reply and transmittal form are to be prepared for shipment by the US Postal Service, but other pressing matters distract one's attention and the mail is not timely deposited for shipment.

Telephone inquiries regarding this decision may be directed to the undersigned at (571) 272-3214—it is noted, however, that all practice before the Office is in writing (see: 37 C.F.R. §1.2[4]) and the proper authority for action on any matter in this regard are the statutes (35 U.S.C.), regulations (37 C.F.R.) and the commentary on policy (MPEP). Therefore, no telephone discussion may be controlling or considered authority for Petitioner's action(s).

/John J. Gillon, Jr./
John J. Gillon, Jr.
Senior Attorney
Office of Petitions

[4] The regulations at 37 C.F.R. §1.2 provide:
§1.2 Business to be transacted in writing.
All business with the Patent and Trademark Office should be transacted in writing. The personal attendance of applicants or their attorneys or agents at the Patent and Trademark Office is unnecessary. The action of the Patent and Trademark Office will be based exclusively on the written record in the Office. No attention will be paid to any alleged oral promise, stipulation, or understanding in relation to which there is disagreement or doubt.

UNITED STATES PATENT AND TRADEMARK OFFICE

Commissioner for Patents
United States Patent and Trademark Office
P.O. Box 1450
Alexandria, VA 22313-1450
www.uspto.gov

MOMENTIVE PERFORMANCE MATERIALS INC.
C/O DILWORTH & BARRESE, LLP
1000 WOODBURY ROAD
SUITE 405
WOODBURY NY 11797

MAILED

AUG 08 2011

OFFICE OF PETITIONS

In re Application of
Glatzer, et al.
Application No. 10/697,919
Filed: 30 October, 2003
Attorney Docket No. US 142759-2

DECISION

This is a decision on the petition filed on 6 July, 2011, for revival of an application abandoned due to unintentional delay pursuant to 37 C.F.R. §1.137(b) .

NOTE:

The record (including the petitions filed on 14 March, 2011, and 6 July, 2011) does not necessitate a finding that the delay between midnight 5 March, 2007 (the date of abandonment), and 6 July, 2011 (the date of the filing of grantable petition), was not unintentional.

Rather, the Patent and Trademark Office is relying in this matter on the duty of candor and good faith of Petitioner/Counsel Adrian T. Calderone (Reg. No. 31,746) when accepting Petitioners' representation that the delay in filing the response was unintentional.[1]

The petition pursuant to 37 C.F.R. §1.137(b) is **GRANTED**.

As to the Allegations
of Unintentional Delay

The requirements of a grantable petition pursuant to 37 C.F.R. §1.137(b) are the petition and fee therefor, a reply, a proper statement and/or showing of unintentional delay under the regulation, and, where applicable, a terminal disclaimer and fee

[1] See Changes to Patent Practice and Procedure, 62 Fed. Reg. at 53160 and 53178, 1203 Off. Gaz. Pat. Office at 88 and 103 (responses to comments 64 and 109)(applicant obligated under 37 C.F.R. §10.18 to inquire into the underlying facts and circumstances when providing the statement required by 37 C.F.R. §1.137(b) to the Patent and Trademark Office).

Petitioners' attentions always are directed to the guidance in the Commentary at MPEP §711.03(c)(II).

BACKGROUND

Petitioner failed to reply timely and properly to the Notice of Allowance/Allowability mailed on 4 December, 2006, with reply due under a non-extendable deadline on or before Monday, 5 March, 2007.

The application went abandoned by operation of law after midnight 5 March, 2007.

The Office mailed the Notice of Abandonment on 5 April, 2007.

On 14 March, 2011, Petitioner filed, *inter alia*, a petition pursuant to 37 C.F.R. §1.137(b), with fee, with a statement of unintentional delay and a reply in the form of a request for continued examination (RCE) and fee and a submission under the provisions of 37 C.F.R. §1.114 in the form of an information disclosure statement. However, it appears that, despite the extended period of abandonment—more than four (4) years—Petitioner made no showing in support of the averment of unintentional delay. The petition was dismissed on 9 May, 2011.

On 6 July, 2011, Petitioner re-advanced the petition pursuant to 37 C.F.R. §1.137(b), with fee, with a statement of unintentional delay and a showing in support thereof and a reply in the form of a request for continued examination (RCE) and fee and a submission under the provisions of 37 C.F.R. §1.114 in the form of an information disclosure statement..

Petitioners' attentions always are directed to the guidance in the Commentary at MPEP §711.03(c) as to the showing regarding unintentional delay and a petition pursuant to 37 C.F.R. §1.137(b).

The availability of applications and application papers online to applicants/practitioners who diligently associate their Customer Number with the respective application(s) now provides an applicant/practitioner on-demand information as to events/transactions in an application.

Out of an abundance of caution, Petitioners always are reminded that those registered to practice and all others who make representations before the Office **must** inquire into the underlying facts of representations made to the Office and support averments with the appropriate documentation–since all owe to the Office the continuing duty to disclose.[2]

[2] See supplement of 17 June, 1999. The Patent and Trademark Office is relying on petitioner's duty of candor and good faith and accepting a statement made by Petitioner. See Changes to Patent Practice and Procedure, 62 Fed. Reg. at 53160 and 53178, 1203 Off. Gaz. Pat. Office at 88 and 103 (responses to comments 64 and 109)(applicant obligated under 37 C.F.R. §10.18 to inquire into the underlying facts and circumstances when providing statements to the Patent and Trademark Office).

STATUTES, REGULATIONS AND ANALYSIS

Congress has authorized the Commissioner to revive an application if the delay is shown to the satisfaction of the Commissioner to have been "unavoidable." 35 U.S.C. §133 (1994).[3] The regulations at 37 C.F.R. §1.137(a) and (b) set forth the requirements for a Petitioner to revive a previously unavoidably or unintentionally, respectively, abandoned application under this congressional grant of authority.

Unintentional delays are those that do not satisfy the very strict statutory and regulatory requirements of unavoidable delay, and, by definition, are not intentional.[4]))

As to Allegations of Unintentional Delay

The requirements of a grantable petition pursuant to 37 C.F.R. §1.137(b) are the petition and fee therefor, a reply, a proper statement of unintentional delay under the regulation, and, where applicable, a terminal disclaimer and fee.

It appears that the requirements under the rule have been satisfied.

CONCLUSION

Accordingly, the petition pursuant to 37 C.F.R. §1.137(b) is **granted**.

The instant application is released to the Technology Center/AU 1621 for further processing in due course.

Petitioner may find it beneficial to view Private PAIR within a fortnight of the instant decision to ensure that the revival has been acknowledged by the TC/AU in response to this decision. It is noted that all inquiries with regard to status need be directed to the TC/AU where that change of status must be effected—that does not occur in the Office of Petitions.

---

[3] 35 U.S.C. §133 provides:

35 U.S.C. §133 Time for prosecuting application.

Upon failure of the applicant to prosecute the application within six months after any action therein, of which notice has been given or mailed to the applicant, or within such shorter time, not less than thirty days, as fixed by the Commissioner in such action, the application shall be regarded as abandoned by the parties thereto, unless it be shown to the satisfaction of the Commissioner that such delay was unavoidable.

[4] Therefore, by example, an unintentional delay in the reply might occur if the reply and transmittal form are to be prepared for shipment by the US Postal Service, but other pressing matters distract one's attention and the mail is not timely deposited for shipment.

Telephone inquiries regarding this decision may be directed to the undersigned at (571) 272-3214—it is noted, however , that all practice before the Office is in writing (see: 37 C.F.R. §1.2[5]) and the proper authority for action on any matter in this regard are the statutes (35 U.S.C.), regulations (37 C.F.R.) and the commentary on policy (MPEP). Therefore, no telephone discussion may be controlling or considered authority for Petitioner's action(s).

/John J. Gillon, Jr./
John J. Gillon, Jr.
Senior Attorney
Office of Petitions

[5] The regulations at 37 C.F.R. §1.2 provide:
§1.2 Business to be transacted in writing.
All business with the Patent and Trademark Office should be transacted in writing. The personal attdance of applicants or their attorneys or agents at the Patent and Trademark Office is unnecessary. The action of the Patent and Trademark Office will be based exclusively on the written record in the Office. No attention will be paid to any alleged oral promise, stipulation, or understanding in relation to which there is disagreement or doubt.

UNITED STATES PATENT AND TRADEMARK OFFICE

Commissioner for Patents
United States Patent and Trademark Office
P.O. Box 1450
Alexandria, VA 22313-1450
www.uspto.gov

BAUSCH & LOMB INCORPORATED
ONE BAUSCH & LOMB PLACE
ROCHESTER NY 14604-2701

MAILED
OCT 12 2010
OFFICE OF PETITIONS

In re Application of	:	
Ramesh KRISHNAMOORTHY	:	
Application No. 10/698,322	:	DECISION ON PETITION
Filed: October 31, 2003	:	
Attorney Docket No. P03359	:	

This is a decision on the petition, filed June 23, 2010, which is being treated as a petition under 37 CFR 1.181 (no fee) requesting withdrawal of the holding of abandonment in the above-identified application.

The petition is **GRANTED**.

This application became abandoned as a result of petitioner's failure to take appropriate action in a timely manner after the decision of February 04, 2010, by the Board of Patent Appeals and Interferences. Therefore, the proceedings as to the rejected claims were terminated. *See* 37 CFR 1.197(b). As no claim was allowed, the application became abandoned on April 05, 2010. *See* MPEP 1214.06.

Petitioner asserts that the Office action dated February 04, 2010 was not received.

A review of the written record indicates no irregularity in the mailing of the Office action and, in the absence of any irregularity, there is a strong presumption that the Office action was properly mailed to the practitioner at the address of record. This presumption may be overcome by a showing that the Office action was not in fact received. In this regard, the showing required to establish the failure to receive the Office action must consist of the following:

1. a statement from practitioner stating that the Office action was not received by the practitioner;
2. a statement from the practitioner attesting to the fact that a search of the file jacket and docket records indicates that the Office action was not received; and

3. a copy of the docket record where the nonreceived Office action would have been entered had it been received and docketed must be attached to and referenced in the practitioner's statement.

See MPEP § 711.03(c) under subheading "Petition to Withdraw Holding of Abandonment Based on Failure to Receive Office Action," and "Withdrawing the Holding of Abandonment When Office Actions Are Not Received," 1156 Official Gazette 53 (November 16, 1993).

The petition satisfies the above-stated requirements. Accordingly, the application was not abandoned in fact.

In view of the above, the Notice of Abandonment is hereby vacated and the holding of abandonment withdrawn.

Telephone inquiries concerning this decision should be directed to Michelle R. Eason at (571) 272-4231.

This application is being referred to the Technology Center technical support staff of Art Unit 1612 for re-mailing the Office action of February 04, 2010. The period for reply will run from the mailing date of the Office action.

Thurman K. Page
Petitions Examiner
Office of Petitions

UNITED STATES PATENT AND TRADEMARK OFFICE

Commissioner for Patents
United States Patent and Trademark Office
P.O. Box 1450
Alexandria, VA 22313-1450
www.uspto.gov

FISH & ASSOCIATES, PC
ROBERT D. FISH
2603 MAIN STREET
SUITE 1000
IRVINE CA 92614-6232

MAILED

MAY 09 2011

OFFICE OF PETITIONS

In re Application of	:	
PASKALOV et al	:	
Application No. 10/698,867	:	DECISION ON PETITION
Filed: October 30, 2003	:	TO WITHDRAW
Attorney Docket No. 100798.0008US1	:	FROM RECORD
	:	

This is a decision on the Request to Withdraw as attorney or agent of record under 37 C.F.R. § 1.36(b), filed March 23, 2011.

The request is **NOT APPROVED.**

The request to withdraw from record cannot be approved because the correspondence address provided for future communications from the Office is not proper. In this regard, the Office will either change the correspondence address of record to the most current address information provided for the assignee of the entire interest who has properly become of record under 37 CFR 3.71 or the first named inventor. Since the address provided is not that of the first named inventor or the assignee, the Request cannot be granted at this time. If the assignee is to receive future correspondence from the Office, a proper chain of title is required. See 37 CFR 3.71 and 37 CFR 3.73(b).

All future communications from the Office will continue to be directed to the above-identified address until otherwise properly notified.

Telephone inquiries concerning this decision should be directed to the undersigned at (571) 272- 6735.

/Diane C. Goodwyn/
Diane C. Goodwyn
Petitions Examiner
Office of Petitions

cc: MARK GORODKIN
C/O HYDRO ENTERPRISES, INC.
626 N. FLORES #205
LOS ANGELES CA 90048

UNITED STATES PATENT AND TRADEMARK OFFICE

Commissioner for Patents
United States Patent and Trademark Office
P.O. Box 1450
Alexandria, VA 22313-1450
www.uspto.gov

MYERS BIGEL SIBLEY & SAJOVEC
PO BOX 37428
RALEIGH NC 27627

In re Application of		FEB 08 2011
PERNER, FREDERICK A. et al.	:	
Application No.: 10/698,896	:	DECISION ON
Filing or 371(c) Date: October 31, 2003	:	PETITION
Attorney Docket Number: 5649-2235	:	

This is a decision on the Petition to Withdraw Holding of Abandonment received in the United States Patent and Trademark Office (USPTO) on May 30, 2007.

This petition is **GRANTED**.

The application was inadvertently abandoned for failure to timely submit the Issue Fee and Publication fee as required by the Notice of Allowance mailed January 22, 2007 which set forth a three (3) month statutory period of reply. The Notice of Abandonment was mailed on May 18, 2007.

Petitioner states that the issue fee transmittal and payment were timely filed via the USPTO on February 6, 2007. Petitioner submitted a copy of the original submission which included a properly completed Certificate of Mailing/Transmission. As authorized, the issue fee of $1400.00 and publication fee of $300.00 was charged to Deposit Account.

In view of the foregoing, the holding of abandonment for failure to timely pay the issue fee is hereby withdrawn and the application restored to pending status.

Telephone inquiries concerning this matter should be directed to the undersigned at (703) 756-1547.

Kay D. Pinkney
Application Assistance Unit
Office of Data Management

UNITED STATES PATENT AND TRADEMARK OFFICE

Commissioner for Patents
United States Patent and Trademark Office
P.O. Box 1450
Alexandria, VA 22313-1450
www.uspto.gov

Fish & Richardson PC
P.O.Box 1022
Minneapolis MN 55440

MAILED

JUL 14 2011

OFFICE OF PETITIONS

In re Patent No. 7,930,757 Shapiro et al. Issue Date: April 19, 2011 Application No. 10/699,124 Filed: October 31, 2003 Attorney Docket No. 07844-621001 Title: OFFLINE ACCESS IN A DOCUMENT CONTROL SYSTEM	DECISION ON REQUEST FOR RECONSIDERATION OF PATENT TERM ADJUSTMENT

This is a decision on the petition filed on June 1, 2011, which is being treated as a petition under 37 CFR 1.705(d) requesting that the patent term adjustment indicated on the above-identified patent be corrected to indicate that the term of the above-identified patent is extended or adjusted by one thousand three hundred thirty-eight (1,338) days.

The petition to correct the patent term adjustment indicated on the above-identified patent is **DISMISSED**.

BACKGROUND

On April 19, 2011, the above-identified application matured into U.S. Patent No. 7,930,757, with a revised patent term adjustment of 1,207 days. On June 1, 2011, patentee timely submitted this request for reconsideration of patent term adjustment (with required fee), asserting that the correct number of days of Patent Term Adjustment is 1,338. Patentee maintains that the Office incorrectly calculated Office delay pursuant to 37 CFR 1.702(b). Patentee contends that the Office erred in

subtracting from the "B delay" a period of time that was not "consumed by continued examination of the application." Specifically, Patentee argues that (after the filing of the request for continued examination) the Office mailed a Notice of Allowance on December 10, 2010, thereby closing examination of the application on that date. Thus, Patentee argues no continued examination took place during the 131 day period from December 10, 2010 (the mailing date of the Notice of Allowance) until April 19, 2011 (the date the patent was issued). As such, Patentee maintains that the "B delay" should include the 131 days and be increased from 495 to 626 days. Patentee concludes that the correct patent term adjustment is 1,338 days (the sum of 945 days of "A delay" and 626 days of "B delay" minus 233 days of overlap between "A delay" and "B delay" - 0 days of applicant delay).

RELEVANT STATUTE AND REGULATIONS

The statutory basis for calculation of "B delay" is 35 U.S.C. 154(b)(1)(B) GUARANTEE OF NO MORE THAN 3-YEAR APPLICATION PENDENCY, which provides that:

Subject to the limitations under paragraph (2), if the issue of an original patent is delayed due to the failure of the United States Patent and Trademark Office to issue a patent within 3 years after the actual filing date of the application in the United States, not including —

(i) any time consumed by continued examination of the application requested by the applicant under section 132(b);

(ii) any time consumed by a proceeding under section 135(a), any time consumed by the imposition of an order under section 181, or any time consumed by appellate review by the Board of Patent Appeals and Interferences or by a Federal court; or

(iii) any delay in the processing of the application by the United States Patent and Trademark Office requested by the applicant except as permitted by paragraph (3)(C), the term of the patent shall be extended 1 day for each day after the end of that 3-year period until the patent is issued.

The implementing regulation, 37 CFR 1.702(b) provides that:

Subject to the provisions of 35 U.S.C. 154(b) and this subpart, the term of an original patent shall be adjusted if the issuance of the patent was delayed due to the failure of the Office to issue a patent within three years after the date on which the application was filed under 35 U.S.C. 111(a) or the national stage commenced under 35 U.S.C. 371(b) or (f) in an international application, but not including:

(1) Any time consumed by continued examination of the application under 35 U.S.C. 132(b);

(2) Any time consumed by an interference proceeding under 35 U.S.C. 135(a);

(3) Any time consumed by the imposition of a secrecy order under 35 U.S.C. 181;

(4) Any time consumed by review by the Board of Patent Appeals and Interferences or a Federal court; or

(5) Any delay in the processing of the application by the Office that was requested by the applicant.

OPINION

Patentee's arguments have been considered, but not found persuasive. The Office calculated the period of "B delay" pursuant to 35 U.S.C. 154(b)(1)(B)(i) and 37 CFR 1.702(b)(1) as 495 days based on the application having been filed under 35 U.S.C. 111(a) on October 31, 2003, and the patent not having issued as of the day after the three year date, November 1, 2006, and a request for continued examination under 132(b) having been filed on March 10, 2008. In other words, the 131-day period beginning on the date of mailing of the Notice of Allowance to the date of issuance of the patent was considered time consumed by continued examination of an application under 35 U.S.C. 132(b) and was not included in the "B delay."

The Office's calculation of "B delay" is correct. The "B delay" is an adjustment entered if the issuance of the patent was delayed due to the failure of the Office to issue a patent within three years after the date on which the application was filed. However, the adjustment does not include, among other things, any time consumed by continued examination of the application at the request of the applicant under 35 U.S.C.

132(b)[1]. Thus, with respect to calculating the "B delay", where applicant has filed a request for continued examination the period of adjustment is the number of days, if any, in the period beginning on the day after the date that is three years after the date on which the application was filed under 35 U.S.C. 111(a) or the national stage commenced under 35 U.S.C. 371(b) or (f) in an international application and ending on the date a patent was issued, but not including the number of days in the period beginning on the date on which a request for continued examination of the application under 35 U.S.C. 132(b) was filed and ending on the date the patent was issued.

Further, counting the period of time excluded from the "B delay" for the filing of a request for continued examination under 35 U.S.C. 132(b), from the date on which the request for continued examination is filed to the date the patent is issued is proper. Patentee does not dispute that time consumed by continued examination of an application under 35 U.S.C. 132(b) is properly excluded and that the calculation of the excluded period begins on the date of filing of the request for continued examination. At issue is what further processing or examination beyond the date of filing of the request for continued examination is not any time consumed by continued examination of the application under 35 U.S.C. 132(b). The USPTO indicated in September of 2000 in the final rule to implement the patent term adjustment provisions of the AIPA that once a request for continued examination under 35 U.S.C. 132(b) and 37 CFR 1.114 is filed in an application, any further processing or examination of the application, including granting of a patent, is by virtue of the

---

[1] Pursuant to 35 U.S.C. 132(b), 37 CFR 1.114 provides for continued examination of an application, as follows:

(a) If prosecution in an application is closed, an applicant may request continued examination of the application by filing a submission and the fee set forth in § 1.17(e) prior to the earliest of:

(1) Payment of the issue fee, unless a petition under § 1.313 is granted;

(2) Abandonment of the application; or

(3) The filing of a notice of appeal to the U.S. Court of Appeals for the Federal Circuit under 35 U.S.C. 141, or the commencement of a civil action under 35 U.S.C. 145 or 146, unless the appeal or civil action is terminated.

(b) Prosecution in an application is closed as used in this section means that the application is under appeal, or that the last Office action is a final action (§ 1.113), a notice of allowance (§ 1.311), or an action that otherwise closes prosecution in the application.

continued examination given to the application under 35 U.S.C. 132(b) and CFR 1.114. See Changes to Implement Patent Term Adjustment under Twenty-Year Patent Term, 65 Fed. Reg. 56366, 56376 (Sept. 18, 2000) (response to comment 8). Thus, the excluded period begins with the filing of the request for continued examination and ends with the issuance of the patent.

Patentee's argument that the period of time after the issuance of a notice of allowance on a request for continued examination is not "any time consumed by continued examination requested by the applicant under section 132(b)" within the meaning of 35 U.S.C. 154(b)(1)(B)(i) is not availing. This limitation is not supported by the statutory language. Garcia v. United States, 469 U.S. 70, 75 (1984) ("only the most extraordinary showing of contrary intentions from [legislative history] would justify a limitation on the 'plain meaning' of the statutory language"). BP Am. Prod. Co. v. Burton, 549 U.S. 84, 91 (2006) ("Unless otherwise defined, statutory terms are generally interpreted in accordance with their ordinary meaning"). The statute provides for a guarantee of no more than 3-year application pendency, by providing for an adjustment in the patent term:

First, "Subject to the limitations of paragraph (2)," means that the limitations of paragraph 2 apply to this paragraph's adjustment of patent term. That is, the day-to-day extension of patent term for pendency beyond the 3 year period is restricted as follows: 1) "B delay" cannot accrue for days of "A delay" that overlap, 2) the patent term cannot be extended beyond disclaimed term, and 3) the period of adjustment, including accrued "B delay," will be reduced for applicant delay.

Second, "if the issue of an original patent is delayed due to the failure of the United States Patent and Trademark Office to issue a patent within 3 years after the actual filing date of the application in the United States," meaning that the condition must first occur that the issuance of an original patent (35 U.S.C. 153), not merely the issuance of a notice of allowance, is delayed due to the Office's failure to issue a patent (sign and record a patent grant in the name of the United States), not merely mail a notice of allowance, within 3 years after the actual filing date of the application in the United States. This provision gives the Office a three-year period to issue a patent (sign and record a patent grant in the name of

the United States) after the application filing date before an adjustment will accrue for "B delay."

Third, "not including- (i) any time consumed by continued examination of the application requested by the applicant under section 132(b); (ii) any time consumed by a proceeding under section 135(a), any time consumed by the imposition of an order under section 181, or any time consumed by appellate review by the Board of Patent Appeals and Interferences or by a Federal court; or (iii) any delay in the processing of the application by the United States Patent and Trademark Office requested by the applicant except as permitted by paragraph (3)(C), meaning that the three-year period does not include "any time consumed by" or "any delay in processing," as specified in clauses (i)-(iii). This language correlates to 35 U.S.C. 154(b)(1)(A) which likewise provides the basis for determining the period given the Office to take the specified actions before an adjustment will accrue for "A delay" (e.g., extended for 1 day after the day after the period specified in clauses (i)-(iv)).

Furthermore, these clauses are interpreted using their ordinary meanings. Nonetheless, the context of the legislation should be considered. As stated in Wyeth v. Dudas, 580 F. Supp. 2d 138 (D.D.C. 2008), because the clock for calculating the 20-year patent term begins to run on the filing date, and not on the day the patent is actually granted, some of the effective term of a patent is consumed by the time it takes to prosecute the application. To mitigate this effect, the statute, *inter alia*, grants adjustments of patent term whenever the patent prosecution takes more than three years, regardless of the reason. The time consumed by prosecution of the application includes every day the application is pending before the Office from the actual filing date of the application in the United States until the date of issuance of the patent. The time it takes to prosecute the application ends not with the mailing of the notice of allowance, but with the issuance of the patent.

Thus, not including "any time consumed by" means not including any days used to prosecute the application as specified in clauses (i)-(ii)[2]. Clause (i) specifies "any time consumed by

[2] Clause (iii) provides for not including (iii) any delay in the processing of the application by the United States Patent and Trademark Office requested by the applicant except as permitted by paragraph (3)(C), the term of the patent shall be extended 1 day for each day after the end of that 3-year

continued examination of the application requested by the applicant under section 132(b)." Clause (ii) specifies "any time consumed by a proceeding under section 135(a), any time consumed by the imposition of an order under section 181, or any time consumed by appellate review by the Board of Patent Appeals and Interferences or by a Federal court." "Time" in the context of this legislation throughout refers to days. "Consumed by" means used by or used in the course of. *Websters Collegiate Dictionary*, (11th ed.). The "any" signifies that the days consumed by are "any" of the days in the pendency of the application, and not just days that occur after the application has been pending for 3 years. As such, "any time consumed by" refers to any days used in the course of 1) continued examination of the application under section 132(b)(the filing of a request for continued examination), 2) interference proceedings, 3) secrecy orders, and 4) appellate review. Thus, that 3-year period given to the Office to issue a patent before an adjustment will accrue for "B delay" does not include any days used in the course of or any time consumed by clauses (i)-(ii), including any time consumed by the filing of a request for continued examination.

Fourth, "the term of the patent shall be extended 1 day for each day after the end of that 3-year period until the patent is issued" meaning that the consequence of this failure is that after "the end of that 3-year period" an additional 1 day of patent term will accrue for each day that the application is pending until the day the patent is issued.

The "time consumed by" or used in the course of the continued examination of the application requested by the applicant under section 132(b) does not end until issuance of the patent. 35 U.S.C. 132(b) was enacted under the same title, the "American Inventors Protection Act of 1999," as 35 U.S.C. 154(b). Section 4403 of the AIPA amended 35 U.S.C. § 132 to provide, at the request of the applicant, for continued examination of an application for a fee (request for continued examination or RCE practice), without requiring the applicant to file a continuing

---

period until the patent is issued. It is noted that paragraph (3)(C) allows with an adequate showing by applicant for reinstatement of no more than 3 months of the patent term reduced for applicant delay in taking in excess of three months to respond.

application under 37 CFR 1.53(b) or a continued prosecution application (CPA) under 37 CFR 1.53(d). Thus, clause (i) is different from clause (ii) in that clause (i) refers to an examination process whereas clause (ii) refers to time consumed by proceedings (interferences, secrecy orders and appeals) in an application.

By nature, the time used in the course of the examination process continues to issuance of the patent. The examination process involves examining the application to ascertain whether it appears that the applicant is entitled to a patent under the law. See 35 U.S.C. 131 ("[t]he Director shall cause an examination to be made of the application and the alleged new invention; and if on such examination it appears that the applicant is entitled to a patent under the law, the Director shall issue a patent therefor"). If on examination it appears that the applicant is entitled to a patent, the USPTO issues a notice of allowance. See 35 U.S.C. 151 ("[i]f it appears that applicant is entitled to a patent under the law, a written notice of allowance of the application shall be given or mailed to the applicant"). If on examination it appears that the applicant is not entitled to a patent, the USPTO issues a notice (an Office action) stating the applicable rejection, objection, or other requirement, with the reasons therefor. See 35 U.S.C. 132 ("[w]henever, on examination, any claim for a patent is rejected, or any objection or requirement made, the Director shall notify the applicant thereof, stating the reasons for such rejection, or objection or requirement, together with such information and references as may be useful in judging of the propriety of continuing the prosecution of his application"). Neither the issuance of a notice of allowance nor the insurance of an Office action terminates the examination process. If after the issuance of an Office action under 35 U.S.C. 132 it subsequently appears that the applicant is entitled to a patent (e.g., in response to an argument or amendment by the applicant), the USPTO will issue a notice of allowance. Conversely, if after the issuance of a notice of allowance under 35 U.S.C. 151 it subsequently appears that the applicant is not entitled to a patent (e.g., in response to information provided by the applicant or uncovered by the USPTO), the USPTO will withdraw the application from issuance and issue an Office action under 35 U.S.C. 132 stating the applicable rejection, objection, or other requirement, with the reasons therefor.

As held in Blacklight Power, the USPTO's responsibility to issue a patent containing only patentable claims does not end with the issuance of a notice of allowance under 35 U.S.C. 151. See BlackLight Power, Inc. v. Rogan, 295 F.3d 1269, 1273 (Fed. Cir. 2002). Rather, if there is any substantial, reasonable ground within the knowledge or cognizance of the Director as to why an application should not issue, it is the USPTO's duty to refuse to issue the patent even if a notice of allowance has previously been issued for the application. See In re Drawbaugh, 9 App. D.C. 219, 240 (D.C. Cir 1896).

Moreover, the applicant continues to be engaged in the examination process after the mailing of the notice of allowance. 37 CFR 1.56 makes clear that the applicant has a duty to disclose information material to patentability as long as the application is pending before the USPTO (i.e., until a patent is granted or the application is abandoned). See 37 CFR 1.56(a) ("[t]he duty to disclose information exists with respect to each pending claim until the claim is cancelled or withdrawn from consideration, or the application becomes abandoned"). 37 CFR 1.97 and 1.98 provide for the consideration of information submitted by the applicant after a notice of allowance has been mailed. See 37 CFR 1.97(d). In addition, 37 CFR 1.312 provides for the amendment of an application after a notice of allowance has been mailed. In fact, the request for examination procedures[3] permit the filing of a request for continued examination under 37 CFR 1.114 even after the issuance of a notice of allowance under 35 U.S.C. 151. See 37 CFR 1.114(a)(1).

As the examination process does not terminate with the mailing of the notice of allowance, the time consumed by continued examination requested by the applicant under section 132(b) does not terminate with the mailing of the Notice of Allowance. All the time the application is pending from the date of filing of the request for continued examination to the mailing of the notice of allowance through issuance of the patent is a consequence of the filing of the request for continued examination. Further action by the Office is pursuant to that request. Applicant has gotten further prosecution of the application without having to file a continuing application under 37 CFR 1.53(b).

---

[3] Thus, on occasion, even where a request for continued examination has already been filed and a notice of allowance issued pursuant to that request, applicant may file a further request for continued examination.

All of the continued examination pursuant to the filing of the request by the applicant is properly excluded from the delay attributed to the Office. 35 U.S.C. 154(b)(1)(B)'s guarantee of a total application pendency of no more than three years provides for adjustment of the patent term for delay due to the Office's failure to issue the patent within three years, but does not include "any time consumed by continued examination requested by the applicant under 35 U.S.C. 132(b)." It is not necessary to mitigate the effect on the 20-year term to the extent that applicant has requested that the Office continue to examine the application via a request for continued examination, in lieu of, the filing of a continuing application under 37 CFR 1.53(b).

In this instance, a request for continued examination was filed on March 10, 2008, and the patent issued by virtue of that request on April 19, 2011. Pursuant to 35 U.S.C. 154(b)(1)(B)(i), the period beginning on March 10, 2008, and ending on April 19, 2011, is not included in calculating Office delay.

CONCLUSION

In view thereof, it is concluded that the patent term adjustment of 1,207 days indicated on the patent is correct.

Telephone inquiries specific to this matter should be directed to the undersigned at (571) 272-3211.

C. T. Donnell

Christina Tartera Donnell
Senior Petitions Attorney
Office of Petitions

UNITED STATES PATENT AND TRADEMARK OFFICE

COMMISSIONER FOR PATENTS
UNITED STATES PATENT AND TRADEMARK OFFICE
P.O. BOX 1450
ALEXANDRIA, VA 22313-1450
www.uspto.gov

Paper No.

FOLEY & LARDNER LLP
150 EAST GILMAN STREET
P.O. BOX 1497
MADISON WI 53701-1497

MAILED

AUG 12 2010

OFFICE OF PETITIONS

In re Patent No. 7,564,784	:	DECISION ON REQUEST
Forssell et al.	:	FOR
Issue Date: July 21, 2009	:	RECONSIDERATION OF
Application No. 10/699,162	:	PATENT TERM ADJUSTMENT
Filed: October 31, 2003	:	and
Atty Docket No. 088245-1332	:	NOTICE OF INTENT TO ISSUE
	:	CERTIFICATE OF CORRECTION

This is a decision on the petition filed on September 11, 2009, which is being treated as a petition under 37 CFR 1.705(d) requesting that the patent term adjustment indicated on the above-identified patent be corrected to indicate that the term of the above-identified patent is extended or adjusted by one thousand two hundred eighty-seven (1,287) days.

The petition to correct the patent term adjustment indicated on the above-identified patent is **GRANTED to the extent indicated herein.** The patent term adjustment is corrected to indicate that the term of the above-identified patent is extended or adjusted by one thousand two hundred eighty-six (1286) days.

The B delay is 414 days, not 415 days. The over three year period is 652 days as the period from the filing date of the request for continued examination (RCE) to the issue date of the patent is not included in the period of B delay, the over three year period began on November 1, 2006, and ended on August 13, 2008, the *day before* the RCE was filed. *See* 35 U.S.C. § 154(b)(1)(B)(i). Patentee's calculation of B delay appears to include correct calculations of 181 overlapping days and 57 days excluded for appellate review. Accordingly, the patent term adjustment is increased by 414 (652 - (181 + 57)) days to a revised patent term adjustment of 1286 days.

The Office will *sua sponte* issue a certificate of correction. Pursuant to 37 CFR 1.322, the Office will not issue a certificate of correction without first providing assignee or patentee an opportunity to be heard. Accordingly, patentees are given **one (1) month or thirty (30) days**, whichever is longer, from the mail date of this decision to respond. No extensions of time will be granted under § 1.136.

Nothing in this decision shall be construed as a waiver of the requirement of 35 U.S.C. 154(b)(4) that any civil action by an applicant dissatisfied with a determination made by the Director under 35 U.S.C. 154(b)(3) be filed in the United States District Court for the District of Columbia within 180 days after the grant of the patent.

The application is being forwarded to the Certificates of Branch for issuance of a certificate of correction. The Office will issue a certificate of correction indicating that the term of the above-identified patent is extended or adjusted by one thousand two hundred eighty-six **(1,286)** days.

Telephone inquiries specific to this matter should be directed to the undersigned at (571) 272-3219.

Nancy Johnson
Senior Petitions Attorney
Office of Petitions

Enclosure: Copy of DRAFT Certificate of Correction

UNITED STATES PATENT AND TRADEMARK OFFICE

CERTIFICATE OF CORRECTION

PATENT : 7,564,784 B2

DATED : **July 21, 2009** **DRAFT**

INVENTOR(S) : Forssell et al.

It is certified that error appears in the above-identified patent and that said Letters Patent is hereby
corrected as shown below:

On the cover page,

[*] Notice: Subject to any disclaimer, the term of this patent is extended or adjusted under 35 USC 154(b) by 872 days

Delete the phrase "by 872 days" and insert – by 1286 days--

UNITED STATES PATENT AND TRADEMARK OFFICE

Commissioner for Patents
United States Patent and Trademark Office
P.O. Box 1450
Alexandria, VA 22313-1450
www.uspto.gov

MAILED

NOV 23 2010

OFFICE OF PETITIONS

KRAMER LEVIN NAFTALIS & FRANKEL LLP
INTELLECTUAL PROPERTY DEPARTMENT
1177 AVENUE OF THE AMERICAS
NEW YORK, NY 10036

In re Patent No. 7,083,070 :
Issue Date: August 1, 2006 :
Application No. 10/699,234 : ON PETITION
Filed: October 31, 2003 :
Patentee(s) Carter W. McGuyer :

This is a decision on the petition under 37 CFR 1.378(c), filed October 14, 2010, to accept the delayed payment of a maintenance fee for the above-identified patent.

The petition is **GRANTED.**

The maintenance fee is hereby accepted and the above-identified patent is reinstated as of the mail date of this decision.

It is not apparent whether the person signing the statement of unintentional delay was in a position to have firsthand or direct knowledge of the facts and circumstances of the delay at issue. Nevertheless, such statement is being treated as having been made as the result of a reasonable inquiry into the facts and circumstances of such delay. In the event that such an inquiry has been made, petitioner must make such an inquiry. If such inquiry results in the discovery that the delay in paying the maintenance fee under 37 CFR 1.378(c) was intentional, petitioner must notify the Office.

The change of correspondence address submitted with the petition on October 14, 2010 is not accepted. The Statement under 37 CFR 3.73(b) is missing. See 37 CFR 1.33(b) states:

> "Amendments and other papers, except for written assertions pursuant to § 1.27(c)(2)(ii) of this part, filed in the application must be signed by: (1) A patent practitioner of record appointed in compliance with § 1.32(b); (2) A patent practitioner not of record who acts in a representative capacity under the provisions of § 1.34; (3) An assignee as provided for under § 3.71(b) of this chapter; or (4) All of the applicants (§ 1.41(b)) for patent, unless there is an assignee of the entire interest and such assignee has taken action in the application in accordance with § 3.71 of this chapter."

Telephone inquiries concerning this decision should be directed to Irvin Dingle at (571) 272-3210.

Irvin Dingle
Petitions Examiner
Office of Petitions

cc: Arnold D. Litt
21 Main St. Ct., Plaza South
West Wing, Ste 353
Hackensack, NJ 07601

SPE RESPONSE FOR CERTIFICATE OF CORRECTION

Paper No.: _____

DATE : 10/01/10

TO SPE OF : ART UNIT 2192

SUBJECT : Request for Certificate of Correction for Appl. No.: 10699323 Patent No.: 7765529

Please respond to this request for a certificate of correction within 7 days.

FOR IFW FILES:

Please review the requested changes/corrections as shown in the **COCIN** document(s) in the IFW application image. No new matter should be introduced, nor should the scope or meaning of the claims be changed.

Please complete the response (see below) and forward the completed response to scanning using document code **COCX**.

FOR PAPER FILES:

Please review the requested changes/corrections as shown in the attached certificate of correction. Please complete this form (see below) and forward it with the file to:

Certificates of Correction Branch (C of C)
Randolph Square 9D40-D
Palm Location 7580

You can fax the Directors/SPE response to 571-270-9990

Lamonte Newsome
Certificates of Correction Branch
703-756-1574

Thank You For Your Assistance

The request for issuing the above-identified correction(s) is hereby:
Note your decision on the appropriate box.

☒ **Approved** Chuck Kendall 10/4/10 **All** changes apply.

☐ **Approved in Part** Specify below which changes **do not** apply.

☐ **Denied** State the reasons for denial below.

Comments: N/A

TUAN DAM
SUPERVISORY PATENT EXAMINER
SPE

2192
Art Unit

UNITED STATES PATENT AND TRADEMARK OFFICE

Commissioner for Patents
United States Patent and Trademark Office
P.O. Box 1450
Alexandria, VA 22313-1450
www.uspto.gov

TEXAS INSTRUMENTS INCORPORATED
P O BOX 655474, M/S 3999
DALLAS TX 75265

MAILED
AUG 18 2011
OFFICE OF PETITIONS

In re Application of :
Antonio F. Mondragon-Torres et al. :
Application No. 10/699,707 :
Filed: November 3, 2003 :
Attorney Docket No. TI-35731 :

DECISION ON PETITION

This is a decision on the petition under the unintentional provisions of 37 CFR 1.137(b), filed July 29, 2011, to revive the above-identified application.

The petition is **GRANTED**.

The application became abandoned for failure to properly reply in a timely manner to the non-final Office action mailed May 24, 2010, which set a shortened statutory period for reply of three (3) months. No extensions of time under the provisions of 37 CFR 1.136(a) were obtained. Accordingly, the application became abandoned on August 25, 2010. A Notice of Abandonment was mailed on February 2, 2011.

The petition satisfies the requirements of 37 CFR 1.137(b) in that petitioner has supplied (1) the reply in the form of an amendment, (2) the petition fee of $1,620, and (3) a proper statement of unintentional delay. Accordingly, the amendment is accepted as being unintentionally delayed.

37 CFR 1.137(b)(3) requires a statement that "the entire delay in filing the required reply from the due date for the reply until the filing of a grantable petition pursuant to 37 CFR 1.137(b) was unintentional." Since the statement appearing in the petition varies from the language required by 37 CFR 1.137(b)(3), the statement is being construed as the required statement. Petitioner must notify the Office if this is **not** a correct reading of the statement appearing in the petition.

Telephone inquiries concerning this decision should be directed to Kimberly Inabinet at (571) 272-4618.

This application is being referred to Technology Center AU 2611 for appropriate action by the Examiner in the normal course of business on the reply received July 29, 2011.

/Kimberly Inabinet/

Kimberly Inabinet
Petitions Examiner
Office of Petitions

UNITED STATES PATENT AND TRADEMARK OFFICE

Commissioner for Patents
United States Patent and Trademark Office
P.O. Box 1450
Alexandria, VA 22313-1450
www.uspto.gov

SEP 20 2010

HEWLETT-PACKARD COMPANY
Intellectual Property Administration
3404 E. Harmony Road
Mail Stop 35
FORT COLLINS, CO 80528

In re Application of	:	
Steven J. Simske	:	DECISION ON PETITION
Application No. 10/700,243	:	UNDER 37 CFR §1.181
Filed: November 3, 2003	:	
For: NAVIGATION ROUTING SYSTEM	:	
AND METHOD	:	

This is a decision on applicant's petition under 37 CFR 1.181 filed March 14, 2008 requesting withdrawal of the finality of the Office action mailed January 3, 2008.

The petition is **DISMISSED AS MOOT.**

Applicant alleges that the finality of the January 3, 2008 Office action was premature as the examiner introduced a new ground of rejection on 35 USC 112, first paragraph on unamended claims.

A review of the file record shows that a non-final Office action was mailed on June 15, 2007. Applicant filed a response on September 17, 2007 arguing the rejection but keeping the claims unchanged. The examiner issued a final Office action on January 3, 2008 with a 112, first paragraph rejection which was a new rejection. Applicant timely filed this petition on March 14, 2008. The examiner withdrew the January 3, 2008 final Office action and issued a non-final Office action on September 24, 2008.

As the corrective action has been made, the issue raised in the petition is now moot.

Any questions regarding this decision should be directed to Supervisory Patent Examiner Thomas Black at (571) 272-6956.

Katherine Matecki

Katherine Matecki, Director
Patent Technology Center 3600
Telephone No.: (571)-272-5250

tb/lm: 8/26/10

LM

UNITED STATES PATENT AND TRADEMARK OFFICE

Commissioner for Patents
United States Patent and Trademark Office
P.O. Box 1450
Alexandria, VA 22313-1450
www.uspto.gov

DANIEL P. BURKE, ESQ.
DANIEL P. BURKE & ASSOCIATES, PLLC
240 TOWNSEND SQUARE
OYSTER BAY, NY 11771

MAILED

JAN 03 2011

OFFICE OF PETITIONS

In re Application of :
Marcus DA SILVA, et *al.* :
Application No. 10/700,329 : DECISION ON PETITION
Filed: November 3, 2003 : UNDER 37 CFR 1.137(b)
Attorney Docket No. **1959-11** :

This is a decision on the renewed petition under the unintentional provisions of 37 CFR 1.137(b), filed November 8, 2010, to revive the above-identified application.

The petition is **GRANTED**.

The application became abandoned for failure to timely file a reply within the meaning of 37 CFR 1.113 to the final Office action of March 17, 2008. The proposed reply required for consideration of a petition to revive must be a Notice of Appeal (and appeal fee required by 37 CFR 41.20(b)(2), an amendment that *prima facie* places the application in condition for allowance, a Request for Continued Examination and submission (37 CFR 1.114), or the filing of a continuing application under 37 CFR 1.53(b). See MPEP 711.03(c)(III)(A)(2). Accordingly, the date of abandonment of this application is June 18, 2008.

It is not apparent whether the person signing the statement of unintentional delay was in a position to have firsthand or direct knowledge of the facts and circumstances of the delay at issue. Nevertheless, such statement is being treated as having been made as the result of a reasonable inquiry into the facts and circumstances of such delay. See 37 CFR 10.18(b) and Changes to Patent Practice and Procedure; Final Rule Notice, 62 Fed. Reg. 53131, 53178 (October 10, 1997), 1203 Off. Gaz. Pat. Office 63, 103 (October 21, 1997). In the event that such an inquiry has not been made, petitioner must make such an inquiry. If such inquiry results in the discovery that it is not correct that the entire delay in filing the required reply from the due date for the reply until the filing of a grantable petition pursuant to 37 CFR 1.137(b) was unintentional, petitioner must notify the Office.

The petition satisfies the requirements of 37 CFR 1.137(b) in that petitioner has supplied (1) the reply in the form of a Request for Continued Examination (RCE) and fee of $405, and the submission required by 37 CFR 1.114; (2) the petition fee of $810 with extension fee of $865; and (3) a proper statement of unintentional delay.

Telephone inquiries concerning this decision should be directed to Monica A. Graves at (571) 272-7253.

This application is being referred to Technology Center AU 2617 for processing of the RCE and for appropriate action by the Examiner in the normal course of business on the amendment submitted in accordance with 37 CFR 1.114.

Thurman K. Page
Petitions Examiner
Office of Petitions

UNITED STATES PATENT AND TRADEMARK OFFICE

Commissioner for Patents
United States Patent and Trademark Office
P.O. Box 1450
Alexandria, VA 22313-1450
www.uspto.gov

COOKE LAW FIRM
2040 NORTH LOOP 336 WEST
SUITE 123
CONROE TX 77304

MAILED
AUG 02 2011
OFFICE OF PETITIONS

In re Patent No. 7,311,149	:	
Issued: December 25, 2007	:	
Application No. 10/700,685	:	ON PETITION
Filed: November 4, 2003	:	
Attorney Docket No. 05.1002.04	:	

This is a notice regarding your request for acceptance of a fee deficiency submission under 37 CFR 1.28 filed July 13, 2011.

On September 1, 1998, the Court of Appeals for the Federal Circuit held that 37 CFR 1.28(c) is the sole provision governing the time for correction of the erroneous payment of the issue fee as a small entity. **See DH Technology v. Synergystex International, Inc. 154 F.3d 1333, 47 USPQ2d 1865 (Fed. Cir. Sept. 1, 1998).**

The Office no longer investigates or rejects original or reissue applications under 37 CFR 1.56. **1098 Off. Gaz. Pat. Office 502 (January 3, 1989)**. Therefore, nothing in this Notice is intended to imply that an investigation was done.

Your fee deficiency submission under 37 CFR 1.28 is hereby **ACCEPTED**.

This patent is no longer entitled to small entity status. Accordingly, all future fees paid in this patent must be paid at the large entity rate.

Further, it is not apparent whether the person signing the instant petition was ever given a power of attorney or authorization of agent regarding this patent. In accordance with 37 CFR 1.34(a), the signature appearing on the petition shall constitute a representation to the United States Patent and Trademark Office that he/she is authorized to represent the particular party in whose behalf he/she acts. While, a courtesy copy of this decision is being mailed to the address given on the petition, the Office will mail all future correspondence solely to the address of record.

Telephone inquires concerning this decision should be directed to the undersigned at (571) 272-7751.

/Joan Olszewski/
Joan Olszewski
Petitions Examiner
Office of Petitions

cc: Collin A. Rose
P.O. Box 3267
Houston, Texas 77253-3267

UNITED STATES PATENT AND TRADEMARK OFFICE

Commissioner for Patents
United States Patent and Trademark Office
P.O. Box 1450
Alexandria, VA 22313-1450
www.uspto.gov

MAILED

AUG 03 2010

OFFICE OF PETITIONS

FISH & RICHARDSON P.C.
P.O. Box 1022
MINNEAPOLIS MN 55440-1022

In re Patent No. 7,685,522	:	DECISION ON REQUEST
Feuerman	:	FOR
Issue Date: March 23, 2010	:	RECONSIDERATION OF
Application No. 10/700,829	:	PATENT TERM ADJUSTMENT
Filed: November 3, 2003	:	and
Atty Docket No.07844-612001	:	NOTICE OF INTENT TO ISSUE
	:	CERTIFICATE OF CORRECTION

This is a decision on the "Letter Regarding Patent Term Adjustment", filed on May 17, 2010, which is being treated as a petition under 37 CFR 1.705(d) requesting that the patent term adjustment indicated on the above-identified patent be reviewed for accuracy.

The petition to correct the patent term adjustment indicated on the above-identified patent to indicate that the term of the above-identified patent is extended or adjusted by one thousand, ninety-two (1,092) days is **GRANTED to the extent indicated herein.**

On March 3, 2010, a Determination of Patent Term Adjustment under 35 U.S.C. 154(b) was mailed indicating that the patent term adjustment to date was 1,117 days. On May 17, 2010, applicants submitted the instant comment. Patentee discloses that patentee believes that the patent term adjustment indicated in the Determination of Patent Term Adjustment under 35 U.S.C. 154(b) mailed July 9, 2009, may be longer than appropriate. Specifically, patentee states:

> The Patent Term Adjustment (PTA) calculation included in the Issue Notification mailed Mach 3, 2010, for the above-referenced application indicates the PTA is 1,117 days. This PTA appears to contain an error.
>
> ...Patentee directs the Office's attention to a supplemental response filed in October 2007, for which no

Applicant Delay was assessed.

Excerpt from "Letter Regarding Patent Term Adjustment", filed on May 17, 2010, *p. 1.*

Pursuant to 37 CFR 1.704(c)(8),

> (c) Circumstances that constitute a failure of the applicant to engage in reasonable efforts to conclude processing or examination of an application also include the following circumstances, which will result in the following reduction of the period of adjustment set forth in § 1.703 to the extent that the periods are not overlapping:
>
> (8) Submission of a supplemental reply or other paper, other than a supplemental reply or other paper expressly requested by the examiner, after a reply has been filed, in which case the period of adjustment set forth in § 1.703 shall be reduced by the number of days, if any, beginning on the day after the date the initial reply was filed and ending on the date the supplemental reply or other such paper was filed.

A review of the application file record reveals that June 9, 2007, a non-final Office action was mailed to which patentee filed a response on September 21, 2007. On October 16, 2007, patentee filed a supplemental response to the non-final Office action in the form of an Interview Summary. There is no indication that the examiner expressly requested the Interview Summary to be filed. Pursuant to 37 CFR 1.704(c)(8), it is appropriate to enter a reduction to the patent term adjustment of 25 days beginning from the day after the date the initial reply was filed, September 22, 2007, and ending on the date the supplemental reply was filed October 16, 2007. Accordingly, the period of reduction to the patent term adjustment of 25 days for applicant delay pursuant to 37 CFR 1.704(c)(8) will be entered.

In view thereof, the revised patent term adjustment is **one thousand, ninety-two (1,092) days** (1,169 days of Office delay - 77 days of applicant delay).

Deposit account 06-1050 will be charged $200.00 for the petition fee required by 37 CFR 1.18(e). No additional fees are due.

Nothing in this decision shall be construed as a waiver of the requirement of 35 U.S.C. 154(b)(4) that any civil action by an applicant dissatisfied with a determination made by the Director under 35 U.S.C. 154(b)(3) be filed in the United States District Court for the District of Columbia within 180 days after the grant of the patent.

The Office will *sua sponte* issue a certificate of correction. Pursuant to 37 CFR 1.322, the Office will not issue a certificate of correction without first providing assignee or patentee an opportunity to be heard. Accordingly, patentees are given **one (1) month or thirty (30) days**, whichever is longer, from the mail date of this decision to respond. No extensions of time will be granted under § 1.136.

The application is being forwarded to the Certificates of Correction Branch for issuance of a certificate of correction. The Office will issue a certificate of correction indicating that the term of the above-identified patent is extended or adjusted by **one thousand, ninety-two (1,092)** days.

Telephone inquiries specific to this matter should be directed to the undersigned at (571) 272-3222.

/Kenya A. McLaughlin/

Kenya A. McLaughlin
Petitions Attorney
Office of Petitions

Enclosure: Copy of DRAFT Certificate of Correction

DRAFT COPY

UNITED STATES PATENT AND TRADEMARK OFFICE

CERTIFICATE OF CORRECTION

PATENT : 7,685,522 B1

DATED : Mar. 23, 2010

INVENTOR(S) : Feuerman.

It is certified that error appears in the above-identified patent and that said Letters Patent is hereby corrected as shown below:

On the cover page,

[*] Notice: Subject to any disclaimer, the term of this patent is extended or adjusted under 35 USC 154(b) by (1117) days

Delete the phrase "by 1117 days" and insert – by 1092 days--

UNITED STATES PATENT AND TRADEMARK OFFICE

Commissioner for Patents
United States Patent and Trademark Office
P.O. Box 1450
Alexandria, VA 22313-1450
www.uspto.gov

GENENTECH, INC.
1 DNA WAY
SOUTH SAN FRANCISCO CA 94080

MAILED

APR 12 2011

OFFICE OF PETITIONS

In re Application of
Audrey Goddard et al.
Application No. 10/700,992
Filed: November 3, 2003
Attorney Docket Number: **GNE-0304 R1C1**

DECISION ON PETITION

This is a decision on the petition under 37 CFR 1.137(b)[1], filed February 14, 2011, to revive the above-identified application.

The petition is **DISMISSED**.

Any request for reconsideration of this decision must be submitted within TWO (2) MONTHS from the mail date of this decision. Extensions of time under 37 CFR 1.136(a) are permitted. The reconsideration request should include a cover letter entitled "Renewed Petition under 37 CFR 1.137(a)" or "Renewed Petition under 37 CFR 1.137(b)." This is not a final agency decision.

The instant application was abandoned for failure to reply to a non-Final Office Action mailed December 21, 2006. A petition to revive was filed January 13, 2010 solely for the purpose of entering the Amendment. Further, Applicants respectfully requested that the above-captioned application be expressly abandoned upon entry of the Amendment. Accordingly, a Notice of Abandonment was mailed April 30, 2010.

---

[1]Effective December 1, 1997, the provisions of 37 CFR 1.137(b) now provide that where the delay in reply was unintentional, a petition may be filed to revive an abandoned application or a lapsed patent pursuant to 37 CFR 1.137(b). A grantable petition filed under the provisions of 37 CFR 1.137(b) must be accompanied by:

(1) the required reply, unless previously filed. In a nonprovisional application abandoned for failure to prosecute, the required reply may be met by the filing of a continuing application. In a nonprovisional application filed on or after June 8, 1995, and abandoned for failure to prosecute, the required reply may also be met by the filing of a request for continued examination in compliance with § 1.114. In an application or patent, abandoned or lapsed for failure to pay the issue fee or any portion thereof, the required reply must be the payment of the issue fee or any outstanding balance thereof. In an application abandoned for failure to pay the publication fee, the required reply must include payment of the publication fee.

(2) the petition fee as set forth in 37 CFR 1.17(m);

(3) a statement that the entire delay in filing the required reply from the due date for the reply until the filing of a grantable petition pursuant to 37 CFR 1.137(b) was unintentional. The Director may require additional information where there is a question whether the delay was unintentional; and

(4) any terminal disclaimer (and fee as set forth in 37 CFR 1.20(d)) required pursuant to 37 CFR 1.137(c)).

Comes now petitioner with the instant "petition to revive to amend the priority claim in Application. Serial No. 11/697,201 to reflect additional priority data determined by Applicants. Therefore, by way of this Petition, Applicants seek to revive the above-captioned application solely for the purpose of amending the priority claim to reflect the data submitted in the Amendment filed herewith and attached hereto as Exhibit A (the "Amendment"). Applicants note that the Amendment merely corrects the form of the priority claim in the above-captioned application to comply with the requirements of 37 C.F.R. § 1.78(a)(2) and (a)(5)."

37 CFR 1.138 provides that:

> An application may be expressly abandoned by filing in the Patent and Trademark Office a written declaration of abandonment signed by the applicant and the assignee of record, if any, and identifying the application. An application may also be expressly abandoned by filing a written declaration of abandonment signed by the attorney or agent of record. A registered attorney or agent acting under the provision of § 1.34(a), or of record, may also expressly abandon a prior application as of the filing date granted to a continuing application when filing such a continuing application. Express abandonment of the application may not be recognized by the Office unless it is actually received by appropriate officials in time to act thereon before the date of issue.

35 U.S.C. § 41(a)(7) applies to the situation of the above-identified application (*i.e.*, to the revival of an abandoned application); however, it precludes the Commissioner from reviving the above-identified application, as the statute does not authorize revival of an intentionally abandoned application.

35 U.S.C. § 41(a)(7) authorizes the Commissioner to accept a petition "for the revival of an unintentionally abandoned application for a patent." As amended December 1, 1997, 37 CFR 1.137(b)(3) provides that a petition under 37 CFR 1.137(b) must be accompanied by a statement that the delay was unintentional, but provides that "[t]he Director may require additional information where there is a question whether the delay was unintentional." Where there is a question whether the delay was unintentional, the petitioner must meet the burden of establishing that the delay was unintentional within the meaning of 35 U.S.C. § 41(a)(7) and 37 CFR 1.137(b). See In re Application of G, 11 USPQ2d 1378, 1380 (Comm'r Pats. 1989). The language of both 35 USC 41(a)(7) and 37 CFR 1.137(b) are clear and unambiguous, and furthermore, without qualification. That is, the delay in tendering the reply to the outstanding Office action, as well as filing the first petition seeking revival, must have been, without qualification, "unintentional" for the reply to now be accepted on petition.

However, in view of the express abandonment of this application, petitioner fails to

make the required showing that the delay was unintentional. Thus, the herein requested revival of an intentionally abandoned application is contrary to the meaning and intent of the statute. Rather, the intentional abandonment of an application precludes revival under 37 CFR 1.137(b).

The petition fee in the amount of $1620 has been charged to deposit account no. 50-2387 per the authorization included with the petition.

Further correspondence with respect to this matter should be addressed as follows:

By mail: Mail Stop Petitions
Commissioner for Patents
P.O. Box 1450
Alexandria VA 22313-1450
By FAX: (571) 273-8300

Telephone inquiries concerning this matter may be directed to the undersigned Petitions Attorney at (571) 272-3212.

Patricia Faison-Ball

Patricia Faison-Ball
Senior Petitions Attorney
Office of Petitions

UNITED STATES PATENT AND TRADEMARK OFFICE

Commissioner for Patents
United States Patent and Trademark Office
P.O. Box 1450
Alexandria, VA 22313-1450
www.uspto.gov

GENENTECH, INC.
1 DNA WAY
SOUTH SAN FRANCISCO CA 94080

MAILED
AUG 16 2011
PCT LEGAL ADMINISTRATION

In re Application of
GODDARD et al.
Application No.: 10/700,992 (now abandoned)
Filed: November 03, 2003
Attorney Docket No.: P3121R1C1
For: NOVEL CYTOKINE RECEPTORS AND NUCLEIC ACIDS ENCODING THE SAME

DECISION ON PETITION

This decision issued in response to the petition under 37 CFR 1.78(a), filed May 24, 2011, to accept an unintentionally delayed claim under 35 U.S.C. §120 for the benefit of priority to the prior-filed international application set forth in the amended specification filed concurrently with the instant petition.

The petition under 37 CFR 1.78(a)(3) is DISMISSED.

The present nonprovisional application was filed after November 29, 2000, and the claim herein for the benefit of priority to the prior-filed international application is submitted after expiration of the period specified in 37 CFR 1.78(a)(2)(ii). Therefore, this is a proper petition under 37 CFR 1.78(a)(3).

A petition for acceptance of a claim for late priority under 37 CFR 1.78(a)(3) is only applicable to those application filed on or after November 29, 2000. Further, the petition is appropriate only after the expiration of the period specified in 37 CFR 1.78(a)(2)(ii). In addition, the petition under 37 CFR 1.78(a)(3) must be accompanied by:

(1) the reference required by 35 U.S.C. § 120 and 37 CFR 1.78(a)(2)(i) of the prior-filed application, unless previously submitted;
(2) the surcharge set forth in § 1.17(t); and
(3) a statement that the entire delay between the date the claim was due under 37 CFR 1.78(a)(2)(ii) and the date the claim was filed was unintentional. The Director may require additional information where there is a question whether the delay was unintentional.

The present petition fails to comply with item (1) above.

MPEP 201.11C. states, "Sometimes a pending application is one of a series of applications wherein the pending application is not copending with the first filed application but is copending with an intermediate application entitled to the benefit of the filing date of the first application. If applicant wishes that the pending application have the benefit of the filing date of the first filed application, applicant must, besides making reference to the intermediate application, also make reference to the first application. See Sticker Indus. Supply Corp. v. Blaw-Knox Co., 405 F.2d 90, 160 USPQ 177 (7th Cir. 1968) and Hovlid v. Asari, 305 F. 2d 747,. 134 USPQ 162 (9th Cir. 1962). The reference to the prior applications must identify all of the prior applications and indicate the relationship (i.e., continuation, divisional, or continuation-in-part) between each nonprovisional application in order to establish copendency throughout the entire chain of prior applications. Appropriate references must be made in each intermediate application in the chain of prior applications. If an applicant desires, for example, the following benefit claim: "this application is a continuation of Application No. C, filed ---, which is a continuation of Application No. B, filed ---, which claims the benefit of provisional Application No. A, filed ---," then Application No. C must have a reference to Application No. B and provisional Application No. A, and Application No. B must have a reference to provisional Application No. A."

Although an amendment was made in the present application adding a specific reference to 09/964,994 and international application no. PCT/US01/06666, the petition in the present case cannot be granted until application 09/964,994 is amended to include a proper reference to the PCT application (PCT/US01/06666).

Before the instant petition under 37 CFR § 1.78(a)(3) can be granted, a petition under 37 CFR 1.78(a)(3) must be granted in application 09/964,994.

Any questions concerning this matter may be directed to Anthony Smith at (571) 272-3298.

Any further correspondence with respect to this matter may be filed electronically via EFS-Web selecting the document description "Petition for review and processing by the PCT Legal Office" or by mail addressed to Mail Stop PCT, Commissioner for Patents, Office of PCT Legal Administration, P.O. Box 1450, Alexandria, Virginia 22313-1450, with the contents of the letter marked to the attention of the Office of PCT Legal Administration.

Bryan Lin

Bryan Lin
PCT Legal Examiner
Office of PCT Legal Administration

UNITED STATES PATENT AND TRADEMARK OFFICE

Commissioner for Patents
United States Patent and Trademark Office
P.O. Box 1450
Alexandria, VA 22313-1450
www.uspto.gov

Intellectual Property Dept.
Dewitt Ross & Stevens SC
2 East Mifflin Street
Suite 600
Madison WI 53703-2865

MAILED

OCT 15 2010

OFFICE OF PETITIONS

In re Application of :
Paul Raymond Rust et al. :
Application No. 10/701,153 : DECISION ON PETITION
Filed: November 3, 2003 :
Attorney Docket No. 11501.007 :

This is a decision on the petition under the unintentional provisions of 37 CFR 1.137(b), filed August 20, 2010, to revive the above-identified application.

The petition is **GRANTED**.

The application became abandoned for failure to reply in a timely manner to the non-final Office action mailed April 15, 2009, which set a shortened statutory period for reply of three (3) months. No extensions of time under the provisions of 37 CFR 1.136(a) were obtained. Accordingly, the application became abandoned on July 16, 2009. A Notice of Abandonment was mailed on November 24, 2009.

The petition satisfies the requirements of 37 CFR 1.137(b) in that petitioner has supplied (1) the reply in the form of an amendment, (2) the petition fee of $1,620 and (3) a proper statement of unintentional delay. Accordingly, the amendment is accepted as being unintentionally delayed.

It is not apparent whether the person signing the statement of unintentional delay was in a position to have firsthand or direct knowledge of the facts and circumstances of the delay at issue. Nevertheless, such statement is being treated as having been made as the result of a reasonable inquiry into the facts and circumstances of such delay. See 37 CFR 10.18(b) and Changes to Patent Practice and Procedure; Final Rule Notice, 62 Fed. Reg. 53131, 53178 (October 10, 1997), 1203 Off. Gaz. Pat. Office 63, 103 (October 21, 1997). In the event that such an inquiry has not been made, petitioner must make such an inquiry. If such inquiry results in the discovery that it is not correct that the entire delay in filing the required reply from the due date for the reply until the filing of a grantable petition pursuant to 37 CFR 1.137(b) was unintentional, petitioner must notify the Office.

A duplicate petition was submitted by an attorney for applicant. The typed name of Charles S. Sara was not accompanied by a signature. The signature on the petition of Joseph T. Leone is proper signed.

Telephone inquiries concerning this decision should be directed to Kimberly Inabinet at (571) 272-4618.

This application is being referred to Technology Center AU 3635 for appropriate action by the Examiner in the normal course of business on the reply received August 20, 2010.

/Kimberly Inabinet/

Kimberly Inabinet
Petitions Examiner
Office of Petitions

UNITED STATES PATENT AND TRADEMARK OFFICE

Commissioner for Patents
United States Patent and Trademark Office
P.O. Box 1450
Alexandria, VA 22313-1450
www.uspto.gov

MAILED

MAR 10 2011

OFFICE OF PETITIONS

MINTZ LEVIN COHN FERRIS GLOVSKY AND
POPEO PC
ONE FINANCIAL CENTER
BOSTON MA 02111

In re Patent No. 7,765,143	:	DECISION ON
Robert A. West	:	PATENT TERM ADJUSTMENT
Issue Date: July 27, 2010	:	AND NOTICE OF INTENT
Application No. 10/701,235	:	TO ISSUE
Filed: November 4, 2003	:	CERTIFICATE OF
Attorney Docket No. 39700-522C02US	:	CORRECTION

This is a decision on the "REQUEST FOR RECONSIDERATION OF PATENT TERM ADJUSTMENT", filed July 28, 2010. Patentee requests that the patent term adjustment indicated on the patent be corrected from one thousand four hundred sixty-six (1466) days to one thousand, four hundred ninety-six (1496) days.

The petition is **GRANTED** **to the extent indicated herein.**

The patent term adjustment indicated on the patent is to be corrected by issuance of a certificate of correction showing a revised Patent Term Adjustment of **one thousand four hundred fifty-eight (1458)** days.

On July 27, 2010, the above-identified application matured into U.S. Patent No. 7,765,143. Patentee timely filed an application for patent term adjustment under 37 CFR 1.705(d) on July 28, 2010. Patentee asserts that he should not have been assessed applicant delay of sixty-one (61) days for the submission of a Rule 312 Amendment on May 28, 2010, after the Notice of Allowance was mailed on May 18, 2010. Rather, Patentee asserts that he should have only been assessed applicant delay of thirty-one (31) days.

37 CFR 1.704(c)(10) states that applicant delay shall be assessed "beginning on the date the...paper was filed and ending on the mailing date of the Office action or notice in response to the... paper". Here, Applicant filed the Rule 312 Amendment on May 28, 2010, and the Office mailed a Supplemental Notice of Allowability on June 28, 2010. Accordingly, Applicant should have been accorded 32 days of delay for the filing of the Rule 312 Amendment, not 61 days as reflected in PAIR, and not 31 days as asserted by Patentee.

Moreover, the Office should have assessed additional Applicant delay for another instance of delay under 37 CFR 1.704(c)(10). The Office earlier mailed a Notice of Allowance on February 5, 2010. In reply, Applicant filed an RCE on April 12, 2010, to which the Office responded by mailing the second Notice of Allowance on May 18, 2010. Accordingly, 37 days of Applicant delay should have been assessed pursuant to 37 CFR 1.704(c)(10).

In view thereof, the correct determination of PTA at the time of issuance is one thousand four hundred ninety-five (1495) days (1735 days of PTO delay, reduced by 277 (208+32+37) days of applicant delay).

Receipt of the $200.00 fee set forth in 37 C.F.R. §1.18(e) is acknowledged.

The application is being forwarded to the Certificates of Correction Branch for issuance of a certificate of correction in order to rectify the error regarding the patent term information. See 35 U.S.C. § 254 and 37 C.F.R. § 1.322. The certificate of correction will indicate that the term of the above-identified patent is extended or adjusted by **one thousand four hundred fifty-eight (1458)** days subject to any disclaimers.

Telephone inquiries specific to this matter should be directed to Cliff Congo, Petitions Attorney, at (571)272-3207.

Anthony Knight
Director
Office of Petitions

Enc: draft certificate of correction

UNITED STATES PATENT AND TRADEMARK OFFICE

DRAFT CERTIFICATE OF CORRECTION

PATENT : 7,765,143 B2

DATED : **July 27, 2010**

INVENTOR(S) : Robert A West

It is certified that error appears in the above-identified patent and that said Letters Patent is hereby corrected as shown below:

On the cover page,

[*] Notice: Subject to any disclaimer, the term of this patent is extended or adjusted under 35 USC 154(b) by 1466 days.

Delete the phrase "by 1466 days" and insert – by 1458 days--

UNITED STATES PATENT AND TRADEMARK OFFICE

COMMISSIONER FOR PATENTS
UNITED STATES PATENT AND TRADEMARK OFFICE
P.O. BOX 1450
ALEXANDRIA, VA 22313-1450
www.uspto.gov

Paper No.

MAILED

OCT 01 2010

OFFICE OF PETITIONS

ISIS PHARMACEUTICALS INC
1896 RUTHERFORD RD.
CARLSBAD CA 92008

In re Patent No. 7,696,345	:	DECISION ON REQUEST
Allerson et al.	:	FOR
Issue Date: April 13, 2010	:	RECONSIDERATION OF
Application No. 10/701,285	:	PATENT TERM ADJUSTMENT
Filed: November 4, 2003	:	and
Atty Docket No. CHEM0006US	:	NOTICE OF INTENT TO ISSUE
	:	CERTIFICATE OF CORRECTION

This is a decision on the petition pursuant to 37 C.F.R. § 1.705(d), filed on June 9, 2010, requesting that the patent term adjustment indicated on the above-identified patent be corrected to indicate that the term of the above-identified patent is extended or adjusted by nine hundred and sixteen (916) days.

The petition to correct the patent term adjustment indicated on the above-identified patent to indicate that the term of the above-identified patent is extended or adjusted by nine hundred and twenty (920) days is **GRANTED to the extent indicated herein.**

Patentee has indicated that this patent is not subject to a terminal disclaimer.[1]

This patent issued on April 13, 2010, with a patent term adjustment of 930 days.

The Office has determined that the patent term adjustment for the above-identified patent is **920 days.**

First, the Office agrees that the examination delay totals 941 days.

[1] Petition, page 4.

Second, the applicant delay associated with the filing of the Rule 1.48 petition totals 120 (not 124)[2] days.[3] It is noted that the PAIR calculations indicate that this period of applicant delay is 77 days, instead of 120 days.

Third, the Office agrees that the applicant delay associated with the submissions of March 4, 2010 totals 8 days,[4] not 41 days as is listed on the PAIR calculations. On March 4, 2010, Patentee submitted a Rule 312 amendment and new drawings. The electronic file contains the notation "O.K. to enter E.P." on two papers (a copy of the amendment to the specification and a copy of Figure 8), and each are dated March 11, 2010 (seven days after the filing of the Rule 312 amendment). This warrants a reduction of eight days, pursuant to 37 C.F.R. § 1.704(c)(10).

It follows that the applicant delay totals 341 (41 + 62 + 28 + 82 + 120 + 8) days.

Fourth, the Office agrees that the over three years period is 452 days,[5] due to the Request for Continued Examination (RCE) cut-off.[6] The Office agrees that the period of overlap totals 132 days.[7] It follows that the period of B-delay is 320 (452 - 132) days.

As such, the patent term adjustment is increased by 920 (941 days of examination delay plus 320 "B-delay" minus 341 days of Applicant delay) days, not 916 days.

The Office acknowledges submission of the $200.00 fee set forth in 37 C.F.R. § 1.18(e). No additional fees are required.

The Office will *sua sponte* issue a certificate of correction. Pursuant to 37 C.F.R. § 1.322, the Office will not issue a certificate of correction without first providing assignee or

---

[2] Petition, page 4.
[3] A Rule 1.48 petition was filed on October 28, 2009, and a corrected filing receipt was mailed 139 days later on March 15, 2010). As such, a reduction of 120 days is warranted, pursuant to 37 C.F.R. § 7.104(c)(10)(ii).
[4] Petition, page 4.
[5] Petition, page 3.
[6] As the period from the filing date of the RCE to the issue date of the patent is not included in the "B" delay period, the over three year period begins on November 5, 2006 and ends on January 30, 2008, the day before the first RCE was filed, which amounts to 452 days.
[7] Id.

Patentee an opportunity to be heard. Accordingly, Patentee is given **one (1) month or thirty (30) days**, whichever is longer, from the mail date of this decision to respond. No extensions of time will be granted under 37 C.F.R. § 1.136.

This patent is being forwarded to the Certificates of Correction Branch for issuance of a certificate of correction. The Office will issue a certificate of correction indicating that the term of the above-identified patent is extended or adjusted by **nine hundred and twenty (920) days**.

It is noted that the address listed on the petition differs from the address of record. The application file does not indicate a change of correspondence address has been filed in this case, although the address given on the petition differs from the address of record. If Petitioner desires to receive future correspondence regarding this patent, the change of correspondence address must be submitted. A courtesy copy of this decision will be mailed to the address which appears on the petition. However, all future correspondence will be directed to the address of record until such time as appropriate instructions are received to the contrary. Petitioner will not receive future correspondence related to this patent unless Change of Correspondence Address, Patent Form (PTO/SB/123) is submitted for the above-identified patent. For Petitioner's convenience, a blank Change of Correspondence Address, Patent Form (PTO/SB/123), may be found at http://www.uspto.gov/web/forms/sb0123.pdf.

If appropriate, a change of fee address (form PTO/SB/47) and a request for customer number (form PTO/SB/125) should be filed in accordance with Manual of Patent Examining Procedure, section 2540.

A blank fee address form may be found at http://www.uspto.gov/web/forms/sb0047.pdf.

Telephone inquiries specific to this matter should be directed to the undersigned at (571) 272-3225.

/Paul Shanoski/
Paul Shanoski
Senior Attorney
Office of Petitions

Enclosure: Copy of DRAFT Certificate of Correction

cc: Robert Chang
222 East 41st Street
New York, New York 10017

UNITED STATES PATENT AND TRADEMARK OFFICE

CERTIFICATE OF CORRECTION

PATENT : 7,696,345 B2

DATED : **April 13, 2010** **DRAFT**

INVENTOR(S) : Allerson et al.

It is certified that error appears in the above-identified patent and that said Letters Patent is hereby corrected as shown below:

On the cover page,

[*] Notice: Subject to any disclaimer, the term of this patent is extended or adjusted under 35 USC 154(b) by 930 days

Delete the phrase "by 930 days" and insert – by 920 days--

PTO/SB/66 (03-09)
Approved for use through 03/31/2012. OMB 0651-0016
U.S. Patent and Trademark Office: U.S. DEPARTMENT OF COMMERCE
Under the Paperwork Reduction Act of 1995, no persons are required to respond to a collection of information unless it displays valid OMB control number.

PETITION TO ACCEPT UNINTENTIONALLY DELAYED PAYMENT OF MAINTENANCE FEE IN AN EXPIRED PATENT (37 CFR 1.378(c))

Patent Number	Issue Date (YYYY-MM-DD)	Application Number	Filing Date (YYYY-MM-DD)	Docket Number (if applicable)
7013828	2006-03-21	10701338	2003-11-04	

CAUTION: Maintenance fee (and surcharge, if any) payment must correctly identify: (1) the patent number and (2) the application number of the actual U.S. application leading to issuance of that patent to ensure the fee(s) is/are associated with the correct patent. 37 CFR 1.366(c) and (d).

SMALL ENTITY
☒ Patentee claims, or has previously claimed, small entity status. See 37 CFR 1.27.

LOSS OF ENTITLEMENT TO SMALL ENTITY STATUS
☐ Patentee is no longer entitled to small entity status. See 37 CFR 1.27(g)

NOT Small Entity		Small Entity	
Fee	Code	Fee	Code
○ 3 ½ year	(1551)	◉ 3 ½ year	(2551)
○ 7 ½ year	(1552)	○ 7 ½ year	(2552)
○ 11 ½ year	(1553)	○ 11 ½ year	(2553)

SURCHARGE
The surcharge required by 37 CFR 1.20(i)(2) (Fee Code 1558) must be paid as a condition of accepting unintentionally delayed payment of the maintenance fee.

MAINTENANCE FEE (37 CFR 1.20(e)-(g))
The appropriate maintenance fee must be submitted with this petition.

STATEMENT
THE UNDERSIGNED CERTIFIES THAT THE DELAY IN PAYMENT OF THE MAINTENANCE FEE TO THIS PATENT WAS UNINTENTIONAL

PETITIONER(S) REQUEST THAT THE DELAYED PAYMENT OF THE MAINTENANCE FEE BE ACCEPTED AND THE PATENT REINSTATED

THIS PORTION MUST BE COMPLETED BY THE SIGNATORY OR SIGNATORIES

37 CFR 1.378(d) states: "Any petition under this section must be signed by an attorney or agent registered to practice before the Patent and Trademark Office, or by the patentee, the assignee, or other party in interest."

I certify, in accordance with 37 CFR 1.4(d)(4) that I am

○ An attorney or agent registered to practice before the Patent and Trademark Office

◉ A sole patentee

○ A joint patentee; I certify that I am authorized to sign this submission on behalf of all the other patentees.

○ A joint patentee; all of whom are signing this e-petition

○ The assignee of record of the entire interest

Under the Paperwork Reduction Act of 1995, no persons are required to respond to a collection of information unless it displays valid OMB control number.

Sole Patentee			
A signature of the applicant or representative is required in accordance with 37 CFR 1.33 and 10.18. Please see 37 CFR 1.4(d) for the form of the signature.			
Signature	/David E. Perko/	Date (YYYY-MM-DD)	2010-10-19
Name	David E. Perko		

This collection of information is required by 37 CFR 1.378(c). The information is required to obtain or retain a benefit by the public which is to file (and by the USPTO to process) an application. Confidentiality is governed by 35 U.S.C. 122 and 37 CFR 1.11 and 1.14. This collection is estimated to take 1 hour to complete, including gathering, preparing, and submitting the completed application form to the USPTO. Time will vary depending upon the individual case. Any comments on the amount of time you require to complete this form and/ or suggestions for reducing this burden, should be sent to the Chief Information Officer, U.S. Patent and Trademark Office, U.S. Department of Commerce, P.O. Box 1450, Alexandria, VA 22313-1450. DO NOT SEND FEES OR COMPLETED FORMS TO THIS ADDRESS. **This form can only be used when in conjunction with EFS-Web. If this form is mailed to the USPTO, it may cause delays in reinstating the patent.**

Privacy Act Statement

The Privacy Act of 1974 (P.L. 93-579) requires that you be given certain information in connection with your submission of the attached form related to a patent application or patent. Accordingly, pursuant to the requirements of the Act, please be advised that: (1) the general authority for the collection of this information is 35 U.S.C. 2(b)(2); (2) furnishing of the information solicited is voluntary; and (3) the principal purpose for which the information is used by the U.S. Patent and Trademark Office is to process and/or examine your submission related to a patent application or patent. If you do not furnish the requested information, the U.S. Patent and Trademark Office may not be able to process and/or examine your submission, which may result in termination of proceedings or abandonment of the application or expiration of the patent.

The information provided by you in this form will be subject to the following routine uses:

1. The information on this form will be treated confidentially to the extent allowed under the Freedom of Information Act (5 U.S.C. 552) and the Privacy Act (5 U.S.C. 552a). Records from this system of records may be disclosed to the Department of Justice to determine whether the Freedom of Information Act requires disclosure of these records.

2. A record from this system of records may be disclosed, as a routine use, in the course of presenting evidence to a court, magistrate, or administrative tribunal, including disclosures to opposing counsel in the course of settlement negotiations.

3. A record in this system of records may be disclosed, as a routine use, to a Member of Congress submitting a request involving an individual, to whom the record pertains, when the individual has requested assistance from the Member with respect to the subject matter of the record.

4. A record in this system of records may be disclosed, as a routine use, to a contractor of the Agency having need for the information in order to perform a contract. Recipients of information shall be required to comply with the requirements of the Privacy Act of 1974, as amended, pursuant to 5 U.S.C. 552a(m).

5. A record related to an International Application filed under the Patent Cooperation Treaty in this system of records may be disclosed, as a routine use, to the International Bureau of the World Intellectual Property Organization, pursuant to the Patent Cooperation Treaty.

6. A record in this system of records may be disclosed, as a routine use, to another federal agency for purposes of National Security review (35 U.S.C. 181) and for review pursuant to the Atomic Energy Act (42 U.S.C. 218(c)).

7. A record from this system of records may be disclosed, as a routine use, to the Administrator, General Services, or his/her designee, during an inspection of records conducted by GSA as part of that agency's responsibility to recommend improvements in records management practices and programs, under authority of 44 U.S.C. 2904 and 2906. Such disclosure shall be made in accordance with the GSA regulations governing inspection of records for this purpose, and any other relevant (i.e., GSA or Commerce) directive. Such disclosure shall not be used to make determinations about individuals.

8. A record from this system of records may be disclosed, as a routine use, to the public after either publication of the application pursuant to 35 U.S.C. 122(b) or issuance of a patent pursuant to 35 U.S.C. 151. Further, a record may be disclosed, subject to the limitations of 37 CFR 1.14, as a routine use, to the public if the record was filed in an application which became abandoned or in which the proceedings were terminated and which application is referenced by either a published application, an application open to public inspections or an issued patent.

9. A record from this system of records may be disclosed, as a routine use, to a Federal, State, or local law enforcement agency, if the USPTO becomes aware of a violation or potential violation of law or regulation.

UNITED STATES PATENT AND TRADEMARK OFFICE

Commissioner for Patents
United States Patent and Trademark Office
P.O. Box 1450
Alexandria, VA 22313-1450
www.uspto.gov

In re Patent No. 7013828
Issue Date: March 21,2006
Application No. 10701338
Filed: November 4,2003
Attorney Docket No.

:
:DECISION GRANTING PETITION
:UNDER 37 CFR 1.378(c)
:

This is a decision on the electronic petition, filed October 22,2010 ,under 37 CFR 1.378(c) to accept the unintentionally delayed payment of the 3.5 year maintenance fee for the above-identified patent.

The petition is **GRANTED**.

The maintenance fee is accepted, and the above-identified patent reinstated as of October 22,2010 .
This decision also constitutes notice that the fee has been accepted. An electronic copy of the petition and this decision has been created as an entry in the Image File Wrapper. Nevertheless, petitioner should print and retain an independent copy.

Telephone inquiries related to this electronic decision should be directed to the Electronic Business Center at 1-866-217-9197.

UNITED STATES PATENT AND TRADEMARK OFFICE

Commissioner for Patents
United States Patent and Trademark Office
P.O. Box 1450
Alexandria, VA 22313-1450
www.uspto.gov

MAILED

APR 08 2011

OFFICE OF PETITIONS

RIVERBED TECHNOLOGY INC. – PVF
C/O PARK, VAUGHAN, FLEMING & DOWLER LLP
2820 FIFTH STREET
DAVIS, CA 95618

In re Patent No. 7,461,404	:	
Issue Date: December 2, 2008	:	
Application No. 10/701,400	:	ON PETITION
Filed: November 3, 2003	:	
Attorney Docket No. RIV-0740	:	

This is a decision on the petition under 37 CFR 1.182, filed March 1, 2011, requesting issuance of a duplicate Letters Patent for the above-identified application.

The petition is **granted**.

The Publishing Division is directed to issue duplicate Letter Patent.

Any questions concerning this matter may be directed to Irvin Dingle at (571) 272-3210. Any questions concerning issuance of the duplicate Letters Patent should be directed to either Niomi Farmer at (703) 308-9250 ext. 119.

A copy of this decision is being forwarded to Publishing Division for issuance of a duplicate Letters Patent.

Irvin Dingle
Petitions Examiner
Office of Petitions

cc: Niomi Farmer, Fax (571) 270-9753.

UNITED STATES PATENT AND TRADEMARK OFFICE

Commissioner for Patents
United States Patent and Trademark Office
P.O. Box 1450
Alexandria, VA 22313-1450
www.uspto.gov

Marek Alboszta
Electronic Scripting Products, Inc.
555 Bryant Street, #142
Palo Alto, CA 94301

MAILED

MAR 23 2011

OFFICE OF PETITIONS

In re Patent of Buermann et al.	:	
Patent No. 7,110,100	:	
Issue Date: September 19, 2006	:	Decision on Petition
Application No. 10/701,817	:	
Filing Date: November 4, 2003	:	
Attorney Docket No. PEN-103/US	:	

This is a decision on the petition filed November 29, 2010, under 37 CFR 1.378(c) to accept the unintentionally delayed payment of a maintenance fee for the above-identified patent.

The petition is **GRANTED.**

The patent issued September 19, 2006. The last day of the grace period for paying the 3.5 year maintenance fee was September 19, 2010. This petition was filed within twenty-four months after the six-month grace period provided in 37 CFR 1.362(e). Therefore, this petition was timely filed under the provisions of 37 CFR 1.378(c).

The maintenance fee in this case is hereby accepted and the above-identified patent is hereby reinstated as of the mail date of this decision.

Telephone inquiries regarding this communication should be directed to Petitions Attorney Steven Brantley at (571) 272-3203.

Charles Steven Brantley
Senior Petitions Attorney
Office of Petitions

SPE RESPONSE FOR CERTIFICATE OF CORRECTION

Paper No.: _____

DATE : 11/8/10

TO SPE OF : ART UNIT 1637

SUBJECT : Request for Certificate of Correction for Appl. No 09/732,622.: 7432048

Please respond to this request for a certificate of correction within 7 days.

FOR IFW FILES:

Please review the requested changes/corrections as shown in the **COCIN** document(s) in the IFW application image. No new matter should be introduced, nor should the scope or meaning of the claims be changed.

Please complete the response (see below) and forward the completed response to scanning using document code **COCX**.

FOR PAPER FILES:

Please review the requested changes/corrections as shown in the attached certificate of correction. Please complete this form (see below) and forward it with the file to:

Certificates of Correction Branch (CofC)

Should the change(s) Be made?

RoChaun Johnson
Certificates of Correction Branch
571 272-0470

Thank You For Your Assistance

The request for issuing the above-identified correction(s) is hereby:
Note your decision on the appropriate box.

✓ **Approved**	**All** changes apply.
☐ **Approved in Part**	Specify below which changes **do not** apply.
☐ **Denied**	State the reasons for denial below.

Comments: _____

/Gary Benzion/ 1637
SPE **Art Unit**

UNITED STATES PATENT AND TRADEMARK OFFICE

Commissioner for Patents
United States Patent and Trademark Office
P.O. Box 1450
Alexandria, VA 22313-1450
www.uspto.gov

August 8, 2011

Christopher L. Kalafut
Foley & Lardner LLP
Verex Plaza
150 East Gilman Street
Madison, WI 53703-1481

Patent No.: 7,149,973 B2
Application No.: 10/702,064
Inventor(s): James Dias, et al.
Issued: December 12, 2006
Title: **RICH MEDIA EVENT PRODUCTION SYSTEM AND METHOD INCLUDING THE CAPTURING, INDEXING, AND SYNCHRONIZING OF RGB-BASED GRAPHIC CONTENT**

Re: Request for Certificate of Correction

Consideration has been given your request for the issuance of a certificate of correction for the above-identified patent under the provisions of Rule 1.323.

A petition under C.F.R. 1.182 is, required to correct the alleged error in an inventor's name/address, since an inventor's address is printed in accordance with the Declaration or the PTOL-85B (Issue Fee Transmittal), in file at the time of payment of the base issue fee. The Patent and Trademark Office did not make the error in the printing of the patent. An inventor's address is a matter not affecting the validity of technical subject mater of the patent, and since inventors often move both before the issuance of the patent and afterwards, no correction is in order under the provision of Rule 1.323, unless a petition under 1.18

In view of the foregoing, your request, in this mater, is hereby denied.

In the Request, Applicant(s) may request that the file be forwarded to Certificates of Correction Branch, for issuance of a Certificate of Correction, if the Request is granted.

Any request under 37 CFR 1.182 should be directed to the following address or facsimile number:

By mail:	Mail Stop PETITIONS Commissioner for Patents Post Office Box 1450 Alexandria, VA 22313-1450
By hand:	Customer Service Window Mail Stop Petitions Randolph Building 401 Dulany Street Alexandria, VA 22314
By fax:	(571) 273-0025 ATTN: Office of Petitions

If a fee (currently $100) was previously submitted for consideration of a Request for Certificate of Correction, under CFR 1.323, to correct assignment data, no additional fee is required.

/Virginia Tolbert/
Virginia Tolbert
For Mary Diggs, Supervisor
Decisions & Certificates
Of Correction Branch
(571) 272-0460 (voice)
(571) 270-9892 (fax)

vt

UNITED STATES PATENT AND TRADEMARK OFFICE

Commissioner for Patents
United States Patent and Trademark Office
P.O. Box 1450
Alexandria, VA 22313-1450
www.uspto.gov

MCDONNELL BOEHNEN HULBERT & BERGHOFF LLP
300 S. WACKER DRIVE
32ND FLOOR
CHICAGO IL 60606

MAILED

SEP 07 2010

OFFICE OF PETITIONS

In re Patent No. 7,596,086	:
Wang et al.	: VACATED DECISION AND DECISION
Issue Date: September 29, 2009	: ON REQUEST FOR
Application No. 10/702,152	: RECONSIDERATION ON
Filed: November 5, 2003	: PATENT TERM ADJUSTMENT
Attorney Docket No. 08-1293	:
Title: METHOD OF AND APPARATUS	:
FOR VARIABLE LENGTH DATA PACKET	:
TRANSMISSION WITH CONFIGURABLE	:
ADAPTIVE OUTPUT SCHEDULING	:
ENABLING TRANSMISSION ON THE	:
SAME TRANSMISSION LINK(S) OF	:
DIFFERENTIATED SERVICES FOR	:
VARIOUS TRAFFIC TYPES	:

This decision vacates the petition decision mailed on April 21, 2010. This decision addresses the Request for Reconsideration of Patent Term Adjustment filed May 17, 2010.

Upon review of the record it is determined that no error was found in the petition decision mailed on March 15, 2010.

The petition to correct the patent term adjustment indicated on the above-identified patent is **GRANTED TO THE EXTENT** it is extended or adjusted by **one thousand ninety-seven (1,097)** days.

In light of the issuance of certificate of correction on April 20, 2010, a new certificate of correction is not required.

Telephone inquiries specific to this matter should be directed to Petitions Attorney, Charlema Grant at (571) 272-3215.

Anthony Knight
Director
Office of Petitions

PTO/SB/66 (03-09)
Approved for use through 03/31/2012. OMB 0651-0016
U.S. Patent and Trademark Office: U.S. DEPARTMENT OF COMMERCE
Under the Paperwork Reduction Act of 1995, no persons are required to respond to a collection of information unless it displays valid OMB control number.

PETITION TO ACCEPT UNINTENTIONALLY DELAYED PAYMENT OF MAINTENANCE FEE IN AN EXPIRED PATENT (37 CFR 1.378(c))

Patent Number	Issue Date (YYYY-MM-DD)	Application Number	Filing Date (YYYY-MM-DD)	Docket Number (if applicable)
7107676	2006-09-19	10702155	2003-11-05	EF-101B

CAUTION: Maintenance fee (and surcharge, if any) payment must correctly identify: (1) the patent number and (2) the application number of the actual U.S. application leading to issuance of that patent to ensure the fee(s) is/are associated with the correct patent. 37 CFR 1.366(c) and (d).

SMALL ENTITY
☒ Patentee claims, or has previously claimed, small entity status. See 37 CFR 1.27.

LOSS OF ENTITLEMENT TO SMALL ENTITY STATUS
☐ Patentee is no longer entitled to small entity status. See 37 CFR 1.27(g)

NOT Small Entity		Small Entity	
Fee	Code	Fee	Code
○ 3 ½ year	(1551)	◉ 3 ½ year	(2551)
○ 7 ½ year	(1552)	○ 7 ½ year	(2552)
○ 11 ½ year	(1553)	○ 11 ½ year	(2553)

SURCHARGE
The surcharge required by 37 CFR 1.20(i)(2) (Fee Code 1558) must be paid as a condition of accepting unintentionally delayed payment of the maintenance fee.

MAINTENANCE FEE (37 CFR 1.20(e)-(g))
The appropriate maintenance fee must be submitted with this petition.

STATEMENT
THE UNDERSIGNED CERTIFIES THAT THE DELAY IN PAYMENT OF THE MAINTENANCE FEE TO THIS PATENT WAS UNINTENTIONAL

PETITIONER(S) REQUEST THAT THE DELAYED PAYMENT OF THE MAINTENANCE FEE BE ACCEPTED AND THE PATENT REINSTATED

THIS PORTION MUST BE COMPLETED BY THE SIGNATORY OR SIGNATORIES

37 CFR 1.378(d) states: "Any petition under this section must be signed by an attorney or agent registered to practice before the Patent and Trademark Office, or by the patentee, the assignee, or other party in interest."

I certify, in accordance with 37 CFR 1.4(d)(4) that I am

◉ An attorney or agent registered to practice before the Patent and Trademark Office

○ A sole patentee

○ A joint patentee; I certify that I am authorized to sign this submission on behalf of all the other patentees.

○ A joint patentee; all of whom are signing this e-petition

○ The assignee of record of the entire interest

Under the Paperwork Reduction Act of 1995, no persons are required to respond to a collection of information unless it displays valid OMB control number.

Patent Practitioner			
A signature of the applicant or representative is required in accordance with 37 CFR 1.33 and 10.18. Please see 37 CFR 1.4(d) for the form of the signature			
Signature	/D.A. Stauffer/	Date (YYYY-MM-DD)	2011-01-12
Name	Dwight A. Stauffer	Registration Number	47963

This collection of information is required by 37 CFR 1.378(c). The information is required to obtain or retain a benefit by the public which is to file (and by the USPTO to process) an application. Confidentiality is governed by 35 U.S.C. 122 and 37 CFR 1.11 and 1.14. This collection is estimated to take 1 hour to complete, including gathering, preparing, and submitting the completed application form to the USPTO. Time will vary depending upon the individual case. Any comments on the amount of time you require to complete this form and/ or suggestions for reducing this burden, should be sent to the Chief Information Officer, U.S. Patent and Trademark Office, U.S. Department of Commerce, P.O. Box 1450, Alexandria, VA 22313-1450. DO NOT SEND FEES OR COMPLETED FORMS TO THIS ADDRESS. **This form can only be used when in conjunction with EFS-Web. If this form is mailed to the USPTO, it may cause delays in reinstating the patent.**

Privacy Act Statement

The Privacy Act of 1974 (P.L. 93-579) requires that you be given certain information in connection with your submission of the attached form related to a patent application or patent. Accordingly, pursuant to the requirements of the Act, please be advised that: (1) the general authority for the collection of this information is 35 U.S.C. 2(b)(2); (2) furnishing of the information solicited is voluntary; and (3) the principal purpose for which the information is used by the U.S. Patent and Trademark Office is to process and/or examine your submission related to a patent application or patent. If you do not furnish the requested information, the U.S. Patent and Trademark Office may not be able to process and/or examine your submission, which may result in termination of proceedings or abandonment of the application or expiration of the patent.

The information provided by you in this form will be subject to the following routine uses:

1. The information on this form will be treated confidentially to the extent allowed under the Freedom of Information Act (5 U.S.C. 552) and the Privacy Act (5 U.S.C. 552a). Records from this system of records may be disclosed to the Department of Justice to determine whether the Freedom of Information Act requires disclosure of these records.

2. A record from this system of records may be disclosed, as a routine use, in the course of presenting evidence to a court, magistrate, or administrative tribunal, including disclosures to opposing counsel in the course of settlement negotiations.

3. A record in this system of records may be disclosed, as a routine use, to a Member of Congress submitting a request involving an individual, to whom the record pertains, when the individual has requested assistance from the Member with respect to the subject matter of the record.

4. A record in this system of records may be disclosed, as a routine use, to a contractor of the Agency having need for the information in order to perform a contract. Recipients of information shall be required to comply with the requirements of the Privacy Act of 1974, as amended, pursuant to 5 U.S.C. 552a(m).

5. A record related to an International Application filed under the Patent Cooperation Treaty in this system of records may be disclosed, as a routine use, to the International Bureau of the World Intellectual Property Organization, pursuant to the Patent Cooperation Treaty.

6. A record in this system of records may be disclosed, as a routine use, to another federal agency for purposes of National Security review (35 U.S.C. 181) and for review pursuant to the Atomic Energy Act (42 U.S.C. 218(c)).

7. A record from this system of records may be disclosed, as a routine use, to the Administrator, General Services, or his/her designee, during an inspection of records conducted by GSA as part of that agency's responsibility to recommend improvements in records management practices and programs, under authority of 44 U.S.C. 2904 and 2906. Such disclosure shall be made in accordance with the GSA regulations governing inspection of records for this purpose, and any other relevant (i.e., GSA or Commerce) directive. Such disclosure shall not be used to make determinations about individuals.

8. A record from this system of records may be disclosed, as a routine use, to the public after either publication of the application pursuant to 35 U.S.C. 122(b) or issuance of a patent pursuant to 35 U.S.C. 151. Further, a record may be disclosed, subject to the limitations of 37 CFR 1.14, as a routine use, to the public if the record was filed in an application which became abandoned or in which the proceedings were terminated and which application is referenced by either a published application, an application open to public inspections or an issued patent.

9. A record from this system of records may be disclosed, as a routine use, to a Federal, State, or local law enforcement agency, if the USPTO becomes aware of a violation or potential violation of law or regulation.

UNITED STATES PATENT AND TRADEMARK OFFICE

Commissioner for Patents
United States Patent and Trademark Office
P.O. Box 1450
Alexandria, VA 22313-1450
www.uspto.gov

In re Patent No. 7107676
Issue Date: September 19,2006
Application No. 10702155
Filed: November 5,2003
Attorney Docket No. EF-101B

:
:DECISION GRANTING PETITION
:UNDER 37 CFR 1.378(c)
:

This is a decision on the electronic petition, filed January 12,2011 ,under 37 CFR 1.378(c) to accept the unintentionally delayed payment of the 3.5 year maintenance fee for the above-identified patent.

The petition is **GRANTED**.

The maintenance fee is accepted, and the above-identified patent reinstated as of January 12,2011 . This decision also constitutes notice that the fee has been accepted. An electronic copy of the petition and this decision has been created as an entry in the Image File Wrapper. Nevertheless, petitioner should print and retain an independent copy.

Telephone inquiries related to this electronic decision should be directed to the Electronic Business Center at 1-866-217-9197.

UNITED STATES PATENT AND TRADEMARK OFFICE

Commissioner for Patents
United States Patent and Trademark Office
P.O. Box 1450
Alexandria, VA 22313-1450
www.uspto.gov

MAILED
JUN 10 2011
OFFICE OF PETITIONS

Laboratory Corporation of America Holdings
c/o Kilpatrick Townsend & Stockton LLP
1001 West Fourth Street
Winston-Salem NC 27101

In re Application of	:	
Linda Liu et al.	:	
Application No. 10/702,269	:	NOTICE
Patent No. 7,122,319	:	
Filed: November 05, 2003	:	
Attorney Docket No. **122.00US**		

This is a notice regarding your request for acceptance of a fee deficiency submission under 37 CFR 1.28 filed May 26, 2011.

The Office no longer investigates or rejects original or reissue patent under 37 CFR 1.56. **1098 Off. Gaz. Pat. Office 502 (January 3, 1989)**. Therefore, nothing in this Notice is intended to imply that an investigation was done.

Your fee deficiency submission under 37 CFR 1.28 is hereby **ACCEPTED**.

This patent is no longer entitled to small entity status. Accordingly, all future fees paid in this patent must be paid at the large entity rate.

Inquiries related to this communication should be directed to the undersigned at (571) 272-2783.

/Tredelle D. Jackson/
Paralegal Specialist
Office of Petitions

UNITED STATES PATENT AND TRADEMARK OFFICE

Commissioner for Patents
United States Patent and Trademark Office
P.O. Box 1450
Alexandria, VA 22313-1450
www.uspto.gov

In re Patent No. 7165360
Issue Date: January 23,2007
Application No. 10702339
Filed: November 6,2003
Attorney Docket No. 205327-9018

:
:DECISION GRANTING PETITION
:UNDER 37 CFR 1.378(c)
:

This is a decision on the electronic petition, filed March 29,2012 ,under 37 CFR 1.378(c) to accept the unintentionally delayed payment of the 3.5 year maintenance fee for the above-identified patent.

The petition is **GRANTED**.

The maintenance fee is accepted, and the above-identified patent reinstated as of March 29,2012 . This decision also constitutes notice that the fee has been accepted. An electronic copy of the petition and this decision has been created as an entry in the Image File Wrapper. Nevertheless, petitioner should print and retain an independent copy.

Telephone inquiries related to this electronic decision should be directed to the Electronic Business Center at 1-866-217-9197.

PTO/SB/66 (03-09)
Approved for use through 03/31/2012. OMB 0651-0016
U.S. Patent and Trademark Office: U.S. DEPARTMENT OF COMMERCE
Under the Paperwork Reduction Act of 1995, no persons are required to respond to a collection of information unless it displays valid OMB control number.

PETITION TO ACCEPT UNINTENTIONALLY DELAYED PAYMENT OF MAINTENANCE FEE IN AN EXPIRED PATENT (37 CFR 1.378(c))

Patent Number	Issue Date (YYYY-MM-DD)	Application Number	Filing Date (YYYY-MM-DD)	Docket Number (if applicable)
7165360	2007-01-23	10702339	2003-11-06	205327-9018

CAUTION: Maintenance fee (and surcharge, if any) payment must correctly identify: (1) the patent number and (2) the application number of the actual U.S. application leading to issuance of that patent to ensure the fee(s) is/are associated with the correct patent. 37 CFR 1.366(c) and (d).

SMALL ENTITY
☐ Patentee claims, or has previously claimed, small entity status. See 37 CFR 1.27.

LOSS OF ENTITLEMENT TO SMALL ENTITY STATUS
☐ Patentee is no longer entitled to small entity status. See 37 CFR 1.27(g)

NOT Small Entity			Small Entity		
	Fee	Code		Fee	Code
◉	3 ½ year	(1551)	○	3 ½ year	(2551)
○	7 ½ year	(1552)	○	7 ½ year	(2552)
○	11 ½ year	(1553)	○	11 ½ year	(2553)

SURCHARGE
The surcharge required by 37 CFR 1.20(i)(2) (Fee Code 1558) must be paid as a condition of accepting unintentionally delayed payment of the maintenance fee.

MAINTENANCE FEE (37 CFR 1.20(e)-(g))
The appropriate maintenance fee must be submitted with this petition.

STATEMENT
THE UNDERSIGNED CERTIFIES THAT THE DELAY IN PAYMENT OF THE MAINTENANCE FEE TO THIS PATENT WAS UNINTENTIONAL

PETITIONER(S) REQUEST THAT THE DELAYED PAYMENT OF THE MAINTENANCE FEE BE ACCEPTED AND THE PATENT REINSTATED

THIS PORTION MUST BE COMPLETED BY THE SIGNATORY OR SIGNATORIES

37 CFR 1.378(d) states: "Any petition under this section must be signed by an attorney or agent registered to practice before the Patent and Trademark Office, or by the patentee, the assignee, or other party in interest."

I certify, in accordance with 37 CFR 1.4(d)(4) that I am

○ An attorney or agent registered to practice before the Patent and Trademark Office

○ A sole patentee

○ A joint patentee; I certify that I am authorized to sign this submission on behalf of all the other patentees.

○ A joint patentee; all of whom are signing this e-petition

◉ The assignee of record of the entire interest

The Assignee of record of the entire interest			
Under 37 CFR 3.71 an assignee becomes of record by filing a statement in compliance with 37 CFR 3.73(b). Signature requirements are set forth in 37 CFR 1.4(d), and the undersigned certifies that he / she is empowered to act on behalf of the assignee of the entire interest			
Signature	/Gene B. Kartchner/	Date (YYYY-MM-DD)	2012-03-28
Name	Gene B. Kartchner, Vice President		
Enter Reel and Frame Number		Remove	
Reel Number	014978	Frame Number	0153
Click ADD for additional Reel Number and Frame Number		Add	

This collection of information is required by 37 CFR 1.378(c). The information is required to obtain or retain a benefit by the public which is to file (and by the USPTO to process) an application. Confidentiality is governed by 35 U.S.C. 122 and 37 CFR 1.11 and 1.14. This collection is estimated to take 1 hour to complete, including gathering, preparing, and submitting the completed application form to the USPTO. Time will vary depending upon the individual case. Any comments on the amount of time you require to complete this form and/ or suggestions for reducing this burden, should be sent to the Chief Information Officer, U.S. Patent and Trademark Office, U.S. Department of Commerce, P.O. Box 1450, Alexandria, VA 22313-1450. DO NOT SEND FEES OR COMPLETED FORMS TO THIS ADDRESS. **This form can only be used when in conjunction with EFS-Web. If this form is mailed to the USPTO, it may cause delays in reinstating the patent.**

Privacy Act Statement

The Privacy Act of 1974 (P.L. 93-579) requires that you be given certain information in connection with your submission of the attached form related to a patent application or patent. Accordingly, pursuant to the requirements of the Act, please be advised that: (1) the general authority for the collection of this information is 35 U.S.C. 2(b)(2); (2) furnishing of the information solicited is voluntary; and (3) the principal purpose for which the information is used by the U.S. Patent and Trademark Office is to process and/or examine your submission related to a patent application or patent. If you do not furnish the requested information, the U.S. Patent and Trademark Office may not be able to process and/or examine your submission, which may result in termination of proceedings or abandonment of the application or expiration of the patent.

The information provided by you in this form will be subject to the following routine uses:

1. The information on this form will be treated confidentially to the extent allowed under the Freedom of Information Act (5 U.S.C. 552) and the Privacy Act (5 U.S.C. 552a). Records from this system of records may be disclosed to the Department of Justice to determine whether the Freedom of Information Act requires disclosure of these records.

2. A record from this system of records may be disclosed, as a routine use, in the course of presenting evidence to a court, magistrate, or administrative tribunal, including disclosures to opposing counsel in the course of settlement negotiations.

3. A record in this system of records may be disclosed, as a routine use, to a Member of Congress submitting a request involving an individual, to whom the record pertains, when the individual has requested assistance from the Member with respect to the subject matter of the record.

4. A record in this system of records may be disclosed, as a routine use, to a contractor of the Agency having need for the information in order to perform a contract. Recipients of information shall be required to comply with the requirements of the Privacy Act of 1974, as amended, pursuant to 5 U.S.C. 552a(m).

5. A record related to an International Application filed under the Patent Cooperation Treaty in this system of records may be disclosed, as a routine use, to the International Bureau of the World Intellectual Property Organization, pursuant to the Patent Cooperation Treaty.

6. A record in this system of records may be disclosed, as a routine use, to another federal agency for purposes of National Security review (35 U.S.C. 181) and for review pursuant to the Atomic Energy Act (42 U.S.C. 218(c)).

7. A record from this system of records may be disclosed, as a routine use, to the Administrator, General Services, or his/her designee, during an inspection of records conducted by GSA as part of that agency's responsibility to recommend improvements in records management practices and programs, under authority of 44 U.S.C. 2904 and 2906. Such disclosure shall be made in accordance with the GSA regulations governing inspection of records for this purpose, and any other relevant (i.e., GSA or Commerce) directive. Such disclosure shall not be used to make determinations about individuals.

8. A record from this system of records may be disclosed, as a routine use, to the public after either publication of the application pursuant to 35 U.S.C. 122(b) or issuance of a patent pursuant to 35 U.S.C. 151. Further, a record may be disclosed, subject to the limitations of 37 CFR 1.14, as a routine use, to the public if the record was filed in an application which became abandoned or in which the proceedings were terminated and which application is referenced by either a published application, an application open to public inspections or an issued patent.

9. A record from this system of records may be disclosed, as a routine use, to a Federal, State, or local law enforcement agency, if the USPTO becomes aware of a violation or potential violation of law or regulation.

PTO/SB/66 (03-09)
Approved for use through 03/31/2012. OMB 0651-0016
U.S. Patent and Trademark Office: U.S. DEPARTMENT OF COMMERCE
Under the Paperwork Reduction Act of 1995, no persons are required to respond to a collection of information unless it displays valid OMB control number.

PETITION TO ACCEPT UNINTENTIONALLY DELAYED PAYMENT OF MAINTENANCE FEE IN AN EXPIRED PATENT (37 CFR 1.378(c))

Patent Number	Issue Date (YYYY-MM-DD)	Application Number	Filing Date (YYYY-MM-DD)	Docket Number (if applicable)
7094799	2006-08-22	10702397	2003-11-05	DOVP-0401PTN

CAUTION: Maintenance fee (and surcharge, if any) payment must correctly identify: (1) the patent number and (2) the application number of the actual U.S. application leading to issuance of that patent to ensure the fee(s) is/are associated with the correct patent. 37 CFR 1.366(c) and (d).

SMALL ENTITY
☒ Patentee claims, or has previously claimed, small entity status. See 37 CFR 1.27.

LOSS OF ENTITLEMENT TO SMALL ENTITY STATUS
☐ Patentee is no longer entitled to small entity status. See 37 CFR 1.27(g)

NOT Small Entity		Small Entity	
Fee	Code	Fee	Code
○ 3 ½ year	(1551)	● 3 ½ year	(2551)
○ 7 ½ year	(1552)	○ 7 ½ year	(2552)
○ 11 ½ year	(1553)	○ 11 ½ year	(2553)

SURCHARGE
The surcharge required by 37 CFR 1.20(i)(2) (Fee Code 1558) must be paid as a condition of accepting unintentionally delayed payment of the maintenance fee.

MAINTENANCE FEE (37 CFR 1.20(e)-(g))
The appropriate maintenance fee must be submitted with this petition.

STATEMENT
THE UNDERSIGNED CERTIFIES THAT THE DELAY IN PAYMENT OF THE MAINTENANCE FEE TO THIS PATENT WAS UNINTENTIONAL

PETITIONER(S) REQUEST THAT THE DELAYED PAYMENT OF THE MAINTENANCE FEE BE ACCEPTED AND THE PATENT REINSTATED

THIS PORTION MUST BE COMPLETED BY THE SIGNATORY OR SIGNATORIES

37 CFR 1.378(d) states: "Any petition under this section must be signed by an attorney or agent registered to practice before the Patent and Trademark Office, or by the patentee, the assignee, or other party in interest."

I certify, in accordance with 37 CFR 1.4(d)(4) that I am

- ● An attorney or agent registered to practice before the Patent and Trademark Office
- ○ A sole patentee
- ○ A joint patentee; I certify that I am authorized to sign this submission on behalf of all the other patentees.
- ○ A joint patentee; all of whom are signing this e-petition
- ○ The assignee of record of the entire interest

Under the Paperwork Reduction Act of 1995, no persons are required to respond to a collection of information unless it displays valid OMB control number.

Patent Practitioner			
A signature of the applicant or representative is required in accordance with 37 CFR 1.33 and 10.18. Please see 37 CFR 1.4(d) for the form of the signature			
Signature	/Jeffrey J. King/	Date (YYYY-MM-DD)	2012-02-22
Name	Jeffrey J. King, Esq.	Registration Number	38515

This collection of information is required by 37 CFR 1.378(c). The information is required to obtain or retain a benefit by the public which is to file (and by the USPTO to process) an application. Confidentiality is governed by 35 U.S.C. 122 and 37 CFR 1.11 and 1.14. This collection is estimated to take 1 hour to complete, including gathering, preparing, and submitting the completed application form to the USPTO. Time will vary depending upon the individual case. Any comments on the amount of time you require to complete this form and/ or suggestions for reducing this burden, should be sent to the Chief Information Officer, U.S. Patent and Trademark Office, U.S. Department of Commerce, P.O. Box 1450, Alexandria, VA 22313-1450. DO NOT SEND FEES OR COMPLETED FORMS TO THIS ADDRESS. **This form can only be used when in conjunction with EFS-Web. If this form is mailed to the USPTO, it may cause delays in reinstating the patent.**

Privacy Act Statement

The Privacy Act of 1974 (P.L. 93-579) requires that you be given certain information in connection with your submission of the attached form related to a patent application or patent. Accordingly, pursuant to the requirements of the Act, please be advised that: (1) the general authority for the collection of this information is 35 U.S.C. 2(b)(2); (2) furnishing of the information solicited is voluntary; and (3) the principal purpose for which the information is used by the U.S. Patent and Trademark Office is to process and/or examine your submission related to a patent application or patent. If you do not furnish the requested information, the U.S. Patent and Trademark Office may not be able to process and/or examine your submission, which may result in termination of proceedings or abandonment of the application or expiration of the patent.

The information provided by you in this form will be subject to the following routine uses:

1. The information on this form will be treated confidentially to the extent allowed under the Freedom of Information Act (5 U.S.C. 552) and the Privacy Act (5 U.S.C. 552a). Records from this system of records may be disclosed to the Department of Justice to determine whether the Freedom of Information Act requires disclosure of these records.

2. A record from this system of records may be disclosed, as a routine use, in the course of presenting evidence to a court, magistrate, or administrative tribunal, including disclosures to opposing counsel in the course of settlement negotiations.

3. A record in this system of records may be disclosed, as a routine use, to a Member of Congress submitting a request involving an individual, to whom the record pertains, when the individual has requested assistance from the Member with respect to the subject matter of the record.

4. A record in this system of records may be disclosed, as a routine use, to a contractor of the Agency having need for the information in order to perform a contract. Recipients of information shall be required to comply with the requirements of the Privacy Act of 1974, as amended, pursuant to 5 U.S.C. 552a(m).

5. A record related to an International Application filed under the Patent Cooperation Treaty in this system of records may be disclosed, as a routine use, to the International Bureau of the World Intellectual Property Organization, pursuant to the Patent Cooperation Treaty.

6. A record in this system of records may be disclosed, as a routine use, to another federal agency for purposes of National Security review (35 U.S.C. 181) and for review pursuant to the Atomic Energy Act (42 U.S.C. 218(c)).

7. A record from this system of records may be disclosed, as a routine use, to the Administrator, General Services, or his/her designee, during an inspection of records conducted by GSA as part of that agency's responsibility to recommend improvements in records management practices and programs, under authority of 44 U.S.C. 2904 and 2906. Such disclosure shall be made in accordance with the GSA regulations governing inspection of records for this purpose, and any other relevant (i.e., GSA or Commerce) directive. Such disclosure shall not be used to make determinations about individuals.

8. A record from this system of records may be disclosed, as a routine use, to the public after either publication of the application pursuant to 35 U.S.C. 122(b) or issuance of a patent pursuant to 35 U.S.C. 151. Further, a record may be disclosed, subject to the limitations of 37 CFR 1.14, as a routine use, to the public if the record was filed in an application which became abandoned or in which the proceedings were terminated and which application is referenced by either a published application, an application open to public inspections or an issued patent.

9. A record from this system of records may be disclosed, as a routine use, to a Federal, State, or local law enforcement agency, if the USPTO becomes aware of a violation or potential violation of law or regulation.

UNITED STATES PATENT AND TRADEMARK OFFICE

Commissioner for Patents
United States Patent and Trademark Office
P.O. Box 1450
Alexandria, VA 22313-1450
www.uspto.gov

In re Patent No. 7094799
Issue Date: August 22,2006
Application No. 10702397
Filed: November 5,2003
Attorney Docket No. 101864-46855

:
:DECISION GRANTING PETITION
:UNDER 37 CFR 1.378(c)
:

This is a decision on the electronic petition, filed February 23,2012 ,under 37 CFR 1.378(c) to accept the unintentionally delayed payment of the 3.5 year maintenance fee for the above-identified patent.

The petition is **GRANTED**.

The maintenance fee is accepted, and the above-identified patent reinstated as of February 23,2012 . This decision also constitutes notice that the fee has been accepted. An electronic copy of the petition and this decision has been created as an entry in the Image File Wrapper. Nevertheless, petitioner should print and retain an independent copy.

Telephone inquiries related to this electronic decision should be directed to the Electronic Business Center at 1-866-217-9197.

UNITED STATES PATENT AND TRADEMARK OFFICE

Commissioner for Patents
United States Patent and Trademark Office
P.O. Box 1450
Alexandria, VA 22313-1450
www.uspto.gov

FERRELLS, PLLC
P. O. BOX 312
CLIFTON, VA 20124-1706

MAILED
JUN 30 2011
OFFICE OF PETITIONS

In re Patent No. 7,300,547	:	
Issue Date: November 27, 2007	:	
Application No. 10/702,414	:	ON PETITION
Filed: November 6, 2003	:	
Attorney Docket No.: 2376 (GP-01-24)	:	

This is a decision on the petition filed May 4, 2011, which is being treated as a request under 37 CFR 3.81(b)[1] to correct the name of the assignee on the front page of the above-identified patent by way of a Certificate of Correction.

The request is **GRANTED**.

Petitioner indicates that the correct assignee's name is Georgia-Pacific Consumer Products LP and that an incorrect assignee's name was included on the Fee(s) Transmittal form PTOL-85(b). The present communication requests that a certificate of correction be issued to reflect the correct assignee on the front page of the Letters Patent.

37 CFR 3.81(b), effective June 25, 2004, reads:

> *After payment of the issue fee:* Any request for issuance of an application in the name of the assignee submitted after the date of payment of the issue fee, and any request for a patent to be corrected to state the name of the assignee, must state that the assignment was submitted for recordation as set forth in § 3.11 before issuance of the patent, and must include a request for a certificate of correction under § 1.323 of this chapter (accompanied by the fee set forth in § 1.20(a) and the processing fee set forth in § 1.17(i) of this chapter.

A review of the details of the assignment recorded on February 14, 2007 confirms that Georgia-Pacific Consumer Products LP is the assignee of record. Further, a request for a certificate of correction under

[1] *See* MPEP 1309, subsection II; and Official Gazette of June 22, 2004.

§ 1.323 and the fee required by § 1.20(a) has been provided. The $130 processing fee set forth in § 1.17(i) will be charged to counsel's deposit account as authorized.

In view of the above, the request is found to comply with the provisions of 37 CFR 3.81(b).

The Certificates of Correction Branch will be notified of this decision granting the petition under 37 CFR 3.81(b) and directing issuance of the requested Certificate of Correction.

Telephone inquiries concerning this decision may be directed to the undersigned at (571) 272-3204. Inquiries regarding the issuance of a certificate of correction should be directed to the Certificates of Correction Branch at (703) 756-1814.

/SDB/

Sherry D. Brinkley
Petitions Examiner
Office of Petitions

UNITED STATES PATENT AND TRADEMARK OFFICE

Commissioner for Patents
United States Patent and Trademark Office
P.O. Box 1450
Alexandria, VA 22313-1450
www.uspto.gov

BIRCH STEWART KOLASCH & BIRCH
PO BOX 747
FALLS CHURCH, VA 22040-0747

MAILED

JAN 03 2011

OFFICE OF PETITIONS

In re Application of
Sang Kyun LEE, et *al.*
Application No. 10/702,462
Filed: November 7, 2003
Attorney Docket No. **1630-0833PUS1**

DECISION ON PETITION
UNDER 37 CFR 1.137(b)

This is a decision on the petition under the unintentional provisions of 37 CFR 1.137(b), filed August 9, 2010, to revive the above-identified application.

The petition is **GRANTED**.

The application became abandoned for failure to timely file a reply within the meaning of 37 CFR 1.113 to the final Office action of September 10, 2008. The proposed reply required for consideration of a petition to revive must be a Notice of Appeal (and appeal fee required by 37 CFR 41.20(b)(2), an amendment that *prima facie* places the application in condition for allowance, a Request for Continued Examination and submission (37 CFR 1.114), or the filing of a continuing application under 37 CFR 1.53(b). See MPEP 711.03(c)(III)(A)(2). No extensions of time pursuant to the provisions of 37 CFR 1.136(a) were obtained. Accordingly, the date of abandonment of this application is December 11, 2008.

It is not apparent whether the person signing the statement of unintentional delay was in a position to have firsthand or direct knowledge of the facts and circumstances of the delay at issue. Nevertheless, such statement is being treated as having been made as the result of a reasonable inquiry into the facts and circumstances of such delay. See 37 CFR 10.18(b) and Changes to Patent Practice and Procedure; Final Rule Notice, 62 Fed. Reg. 53131, 53178 (October 10, 1997), 1203 Off. Gaz. Pat. Office 63, 103 (October 21, 1997). In the event that such an inquiry has not been made, petitioner must make such an inquiry. If such inquiry results in the discovery that it is not correct that the entire delay in filing the required reply from the due date for the reply until the filing of a grantable petition pursuant to 37 CFR 1.137(b) was unintentional, petitioner must notify the Office.

The petition satisfies the requirements of 37 CFR 1.137(b) in that petitioner has supplied (1) the reply in the form of a Request for Continued Examination (RCE) and fee of $810, and the submission required by 37 CFR 1.114; (2) the petition fee of $1620; and (3) an adequate statement of unintentional delay.

Telephone inquiries concerning this decision should be directed to Monica A. Graves at (571) 272-7253.

This application is being referred to Technology Center AU 2444 for processing of the RCE and for appropriate action by the Examiner in the normal course of business on the amendment submitted in accordance with 37 CFR 1.114.

Thurman K. Page
Petitions Examiner
Office of Petitions

UNITED STATES PATENT AND TRADEMARK OFFICE

4-10-2012

Commissioner for Patents
United States Patent and Trademark Office
P.O. Box 1450
Alexandria, VA 22313-1450
www.uspto.gov

Patent No : 7,188,180 B2
Ser. No. : 10702,486
Inventor(s) : Victor Larson, et. al.
Issued : March 6, 2007

Re: Request for Certificate of Correction

Consideration has been given your request for the issuance of a certificate of correction for the above-identified patent under the provisions of Rule(s) 1.322.

Assignees' names and addresses (assignment data) printed in a patent, are based *solely* on information supplied in the appropriate space for identifying the assignment data, i.e., item 3 of the Issue Fee Transmittal Form PTOL-85B. Granting of a request under 37 CFR 3.81(b) is required to correct applicant's error providing ***incorrect or erroneous*** assignment data, *before* issuance of a Certificate of Correction, under 37 CFR 1.323 *(see Manual of Patent Examining Procedures (M.P.E.P) Chp.1400, sect. 1481).* This procedure is required *at any time after the issue fee is paid,* including after issuance of the patent.

In view of the foregoing, your request is hereby denied.

A request to correct the Assignee under 37 CFR 3.81(b) should include:

A. **the processing fee set forth in 37 CFR 1.17(i) (currently $130);**
B. a statement that the failure to include the correct assignee name on the PTOL-85B was inadvertent; and
C. a copy of the Notice of Recordation of Assignment Document, reflecting the reel and frame number where the assignment(s) is recorded and/or reflecting proof of *the date* the assignment was submitted for recordation.

In the Request, Applicant(s) may request that the file be forwarded to Certificates of Correction Branch, for issuance of a Certificate of Correction, if the Request is granted.

Any request under 37 CFR 3.81(b) should be directed to the following address or facsimile number:

By mail: Mail Stop PETITIONS
Commissioner for Patents
Post Office Box 1450
Alexandria, VA 22313-1450

By hand: Customer Service Window
Mail Stop Petitions
Randolph Building
401 Dulany Street
Alexandria, VA 22314

By fax: (703) 872-9306
ATTN: Office of Petitions

If a fee (currently $100) was previously submitted for consideration of a Request for Certificate of Correction, under CFR 1.323, to correct assignment data, , no additional fee is required.

Eva James
For Mary Diggs
Decisions & Certificates
of Correction Branch
(571) 272-3422 or 703- 756 -1580

Atabak R. Royaee
Mcdermott Will & Emery LLP
28 State Street
Boston, MA 02109

ej

SPE RESPONSE FOR CERTIFICATE OF CORRECTION

Paper No.:20100830

DATE : August 30, 2010

TO SPE OF : ART UNIT 1638

SUBJECT : Request for Certificate of Correction on Patent No.: 7,282,623

A response is requested with respect to the accompanying request for a certificate of correction.

Please complete this form and return with file, within **7** days to:
Certificates of Correction Branch - ST (South Tower) 9A22
Palm location **7590** - Tel. No. (703) 305-8309

With respect to the change(s) requested, correcting Office and/or Applicant's errors, should the patent read as shown in the certificate of correction? No new matter should be introduced, nor should the scope or meaning of the claims be changed.

Thank You For Your Assistance **Certificates of Correction Branch**

The request for issuing the above-identified correction(s) is hereby:

Note your decision on the appropriated box.

☒ **Approved** All changes apply.

☐ **Approved in Part** Specify below which changes **do not** apply.

☐ **Denied** State the reasons for denial below.

Comments:

The Certificate of Correction is approved in view of the granting of the decison on the petition for adding a claim to priority on 7/19/10. /EM/

Attn: Angela Green

/Anne Marie Grunberg/
Supervisory Patent Examiner.Art Unit 1638

UNITED STATES PATENT AND TRADEMARK OFFICE

Commissioner for Patents
United States Patent and Trademark Office
P.O. Box 1450
Alexandria, VA 22313-1450
www.uspto.gov

October 27, 2010

Patent No. : 7,696,252 B2
Appl. No. : 10/703,094
Inventor(s) : Richard M. Pashley
Issued : April 13, 2010
Title : **PROCESS FOR THE PRODUCTION OF EMULSIONS AND DISPERSIONS**
Docket No. : **026007-000100US**

Re: Request for Certificate of Correction

Consideration has been given your request for the issuance of a certificate of correction for the above-identified patent under the provisions of Rule 1.323.

Assignees' names and addresses (assignment data) printed in a patent, are based *solely* on information supplied in the appropriate space for identifying the assignment data, i.e., item 3 of the Issue Fee Transmittal Form PTOL-85B. Granting of a request under 37 CFR 3.81(b) is required to correct applicant's error providing ***incorrect or erroneous*** assignment data, *before* issuance of a Certificate of Correction, under 37 CFR 1.323 *(see Manual of Patent Examining Procedures (M.P.E.P) Chp.1400, sect. 1481).* This procedure is required *at any time after the issue fee is paid*, including after issuance of the patent.

In view of the foregoing, your request, in this mater, is hereby denied.

A request to correct the Assignee under 37 CFR 3.81(b) should include:

A. **the processing fee set forth in 37 CFR 1.117(h) (currently $130);**
B. a statement that the failure to include the correct assignee name on the PTOL-85B was inadvertent; and
C. a copy of the Notice of Recordation of Assignment Document, reflecting the reel and frame number where the assignment(s) is recorded and/or reflecting proof of *the date* the assignment was submitted for recordation.

In the Request, Applicant(s) may request that the file be forwarded to Certificates of Correction Branch, for issuance of a Certificate of Correction, if the Request is granted.

Any request under 37 CFR 3.81(b) should be directed to the following address or facsimile number:

By mail: Mail Stop PETITIONS
Commissioner for Patents
Post Office Box 1450
Alexandria, VA 22313-1450

By hand: Customer Service Window
Mail Stop Petitions
Randolph Building
401 Dulany Street
Alexandria, VA 22314

By fax: (571) 273-8300
ATTN: Office of Petitions

If a fee (currently $100) was previously submitted for consideration of a Request for Certificate of Correction, under CFR 1.323, to correct assignment data, , no additional fee is required.

Antonio Johnson
For Mary F. Diggs
Decisions & Certificates
of Correction Branch
(571)272-0483

TOWNSEND AND TOWNSEND AND CREW, LLP
TWO EMBARCADERO CENTER
EIGHTH FLOOR
SAN FRANCISCO CA 94111-3834

UNITED STATES PATENT AND TRADEMARK OFFICE

UNITED STATES DEPARTMENT OF COMMERCE
United States Patent and Trademark Office
Address: COMMISSIONER FOR PATENTS
P.O. Box 1450
Alexandria, Virginia 22313-1450
www.uspto.gov

MINTZ, LEVIN, COHN, FERRIS, GLOVSKY & POPEO, P.C.
ONE FINANCIAL CENTER
BOSTON, MA 02111

Mail Date: 08/04/2010

Applicant	: Peter Bittner	: DECISION ON REQUEST FOR
Patent Number	: 7653688	: RECALCULATION of PATENT
Issue Date	: 01/26/2010	: TERM ADJUSTMENT IN VIEW
Application No	: 10/703,144	: OF WYETH AND NOTICE OF INTENT TO
Filed	: 11/05/2003	: ISSUE CERTIFICATE OF CORRECTION
		:

The Request for Recalculation is **GRANTED** to the extent indicated.

The patent term adjustment has been determined to be **1127** days. The USPTO will *sua sponte* issue a certificate of correction reflecting the amount of PTA days determined by the recalculation.

Prior to the issuance of the certificate of correction, the USPTO will afford patentee an opportunity to be heard and request reconsideration. Accordingly, patentee has **one month or thirty (30) days**, whichever is longer, to file a request for reconsideration of this patent term adjustment calculation. See 35 U.S.C. 154(b)(3)(B)(ii) and 37 CFR 1.322(a)(4). No extensions of time will be granted under 37 CFR 1.136.

Patentee should use document code PET.OP if electronically filing a request for reconsideration of this patent term adjustment calculation. The patentee must also include the information required by 37 CFR 1.705(b)(2) and the fee required by 37 CFR 1.18(e). If patentee does not file a timely request for reconsideration of this patent term adjustment calculation including the information required by 37 CFR 1.705(b)(2) and the fee required by 37 CFR 1.18(e), the USPTO will issue a certificate of correction reflecting the PTA determination noted above.

Patentee should be aware that in order to preserve the right to review in the United States District Court for the District of Columbia of the USPTO patent term adjustment determination, patentee must ensure that he or she also take the steps required under 35 U.S.C. 154(b)(4)(A) in a timely manner. Nothing in the request for recalculation should be construed as providing an alternative time frame for commencing a civil action under 35 U.S.C. 154(b)(4)(A).

Any questions concerning this decision should be directed to the Office of Patent Legal Administration at 571-272-7702.

UNITED STATES PATENT AND TRADEMARK OFFICE

Commissioner for Patents
United States Patent and Trademark Office
P.O. Box 1450
Alexandria, VA 22313-1450
www.uspto.gov

PERKINS COIE LLP
P.O. BOX 1208
SEATTLE, WA 98111-1208

MAILED

AUG 26 2010

OFFICE OF PETITIONS

In re Application of
Wei Yen, et al.
Application No. 10/703,149
Filed: November 5, 2003
Attorney Docket No. 57189-8007US01

DECISION ON PETITION
TO WITHDRAW
FROM RECORD

This is a decision on the Request to Withdraw as attorney or agent of record under 37 C.F.R. § 1.36(b), filed August 5, 2010.

The request is **NOT APPROVED**.

A grantable request to withdraw as attorney/agent of record must be signed by every attorney/agent seeking to withdraw or contain a clear indication that one attorney is signing on behalf of another/others.

Petitioner should also note that the Office will no longer accept address changes to a new practitioner of law firm filed with a Request, absent the filing of a power of attorney to the new representative. The Office will either change the correspondence address of record to the most current address information provided for the assignee of the entire interest who properly became of record under 37 CFR 3.71 or, the most current address information provided for the first named inventor.

Accordingly, the request to withdraw from record cannot be approved because the request does not include an acceptable current correspondence address for future communications from the Office.

Additionally, as set forth in MPEP 403(I), the addition or deletion of a practitioner from the list of persons associated with a Customer Number should be done by way of a Request for Customer Number Data Change (PTO/SB/124) and not a Request for Withdrawal As Attorney or Agent and Change of Correspondence Address (Form PTO/SB/83).

All future communications from the Office will continue to be directed to the above-listed address until otherwise notified by applicant.

Telephone inquiries concerning this decision should be directed to undersigned at 571-272-1642. All other inquiries concerning the examination or status of this application should be directed to the Technology Center.

/AMW/
April M. Wise
Petitions Examiner
Office of Petitions

Doc Code: PET.AUTO Document Description: Petition automatically granted by EFS-Web	PTO/SB/140 U.S. Patent and Trademark Office Department of Commerce

Electronic Petition Request	**PETITION TO WITHDRAW AN APPLICATION FROM ISSUE AFTER PAYMENT OF THE ISSUE FEE UNDER 37 CFR 1.313(c)**
Application Number	10703149
Filing Date	05-Nov-2003
First Named Inventor	Wei Yen
Art Unit	3667
Examiner Name	MARY CHEUNG
Attorney Docket Number	25NP-157459
Title	STATIC-OR-DYNAMIC AND LIMITED-OR-UNLIMITED CONTENT RIGHTS

An application may be withdrawn from issue for further action upon petition by the applicant. To request that the Office withdraw an application from issue, applicant must file a petition under this section including the fee set forth in § 1.17(h) and a showing of good and sufficient reasons why withdrawal of the application from issue is necessary.

APPLICANT HEREBY PETITIONS TO WITHDRAW THIS APPLICATION FROM ISSUE UNDER 37 CFR 1.313(c).

A grantable petition requires the following items:
(1) Petition fee; and
(2) One of the following reasons:
(a) Unpatentability of one or more claims, which must be accompanied by an unequivocal statement that one or more claims are unpatentable, an amendment to such claim or claims, and an explanation as to how the amendment causes such claim or claims to be patentable;
(b) Consideration of a request for continued examination in compliance with § 1.114 (for a utility or plant application only); or
(c) Express abandonment of the application. Such express abandonment may be in favor of a continuing application, but not a CPA under 37 CFR 1.53(d).

Petition Fee

☐ Applicant claims SMALL ENTITY status. See 37 CFR 1.27.

☐ Applicant is no longer claiming SMALL ENTITY status. See 37 CFR 1.27(g)(2).

☐ Applicant(s) status remains as SMALL ENTITY.

☒ Applicant(s) status remains as other than SMALL ENTITY

Reason for withdrawal from issue

○ One or more claims are unpatentable

◉ Consideration of a request for continued examination (RCE) (List of Required Documents and Fees)

○ Applicant hereby expressly abandons the instant application (any attorney/agent signing for this reason must have power of attorney pursuant to 37 CFR 1.32(b)).

RCE request,submission, and fee.

☐ I certify, in accordance with 37 CFR 1.4(d)(4) that : The RCE request ,submission, and fee have already been filed in the above-identified application on

☒ Are attached.

THIS PORTION MUST BE COMPLETED BY THE SIGNATORY OR SIGNATORIES

I certify, in accordance with 37 CFR 1.4(d)(4) that I am:

◉ An attorney or agent registered to practice before the Patent and Trademark Office who has been given power of attorney in this application.

○ An attorney or agent registered to practice before the Patent and Trademark Office, acting in a representative capacity.

○ A sole inventor

○ A joint inventor; I certify that I am authorized to sign this submission on behalf of all of the inventors

○ A joint inventor; all of whom are signing this e-petition

○ The assignee of record of the entire interest that has properly made itself of record pursuant to 37 CFR 3.71

Signature	/William F. Ahmann/
Name	William F. Ahmann
Registration Number	52548

UNITED STATES PATENT AND TRADEMARK OFFICE

Commissioner for Patents
United States Patent and Trademark Office
P.O. Box 1450
Alexandria, VA 22313-1450
www.uspto.gov

Decision Date : December 23, 2011

In re Application of :

Wei Yen

DECISION ON PETITION

UNDER CFR 1.313(c)(2)

Application No : 10703149

Filed : 05-Nov-2003

Attorney Docket No : 25NP-157459

This is an electronic decision on the petition under 37 CFR 1.313(c)(2), filed December 23, 201,1to withdraw the above-identified application from issue after payment of the issue fee.

The petition is **GRANTED.**

The above-identified application is withdrawn from issue for consideration of a submission under 37 CFR 1.114 (request for continued examination). See 37 CFR 1.313(c)(2).

Petitioner is advised that the issue fee paid in this application cannot be refunded. If, however, this application is again allowed, petitioner may request that it be applied towards the issue fee required by the new Notice of Allowance.

Telephone inquiries concerning this decision should be directed to the Patent Electronic Business Center (EBC) at 866-217-9197.

This application file is being referred to Technology Center AU 3667 for processing of the request for continuing examination under 37 CFR 1.114 .

Office of Petitions

UNITED STATES PATENT AND TRADEMARK OFFICE

Commissioner for Patents
United States Patent and Trademark Office
P.O. Box 1450
Alexandria, VA 22313-1450
www.uspto.gov

FENNEMORE CRAIG
3003 NORTH CENTRAL AVENUE
SUITE 2600
PHOENIX AZ 85012

MAILED

APR 06 2011

OFFICE OF PETITIONS

In re Application of	:	
OPIE, John C. et al.	:	
Application No. 10/703,231	:	DECISION ON PETITION
Filed: November 07, 2003	:	TO WITHDRAW
Attorney Docket No. 11637.011	:	FROM RECORD
	:	

This is a decision on the Request to Withdraw as attorney or agent of record under 37 C.F.R. § 1.36(b), filed March 03, 2011.

The request is **APPROVED**.

A grantable request to withdraw as attorney/agent of record must be signed by every attorney/agent seeking to withdraw or contain a clear indication that one attorney is signing on behalf of another/others. The Office requires the practitioner(s) requesting withdrawal to certify that he, she, or they have: (1) given reasonable notice to the client, prior to the expiration of the response period, that the practitioner(s) intends to withdraw from employment; (2) delivered to the client or a duly authorized representative of the client all papers and property (including funds) to which the client is entitled; and (3) notified the client of any responses that may be due and the time frame within which the client must respond, pursuant 37 CFR 10.40(c).

The request was signed by Rodney Fuller on behalf of all attorneys of record who are associated with customer No. 27887. All attorneys/agents associated with the Customer Number 27887 have been withdrawn. Applicant is reminded that there is no attorney of record at this time.

The correspondence address of record has been changed and the new correspondence address is the address indicated below.

Telephone inquiries concerning this decision should be directed to Tredelle Jackson at 571-272-2783.

/Tredelle D. Jackson/
Paralegal Specialist
Office of Petitions

cc: **SCOTTSDALE MEDICAL DEVICES, INC.**
7300 E. ACOMA DRIVE
SCOTTSDALE, AZ 85260

UNITED STATES PATENT AND TRADEMARK OFFICE

Commissioner for Patents
United States Patent and Trademark Office
P.O. Box 1450
Alexandria, VA 22313-1450
www.uspto.gov

MCANDREWS HELD & MALLOY, LTD
500 WEST MADISON STREET
SUITE 3400
CHICAGO IL 60661

MAILED
DEC 02 2010
OFFICE OF PETITIONS

In re Application of :
Hatti, et al. :
Application No. 10/703,332 : ON APPLICATION FOR
Filed: November 7, 2003 : PATENT TERM ADJUSTMENT
Atty Docket No. **15139US02** :

This is in response to the "APPLICATION FOR RECONSIDERATION OF PATENT TERM ADJUSTMENT UNDER 35 U.S.C. 154(b) ACCOMPANYING THE NOTICE OF ALLOWANCE (37 C.F.R. § 1.705)" filed November 24, 2010, which is properly treated under 37 CFR 1.705(b). Applicants submits that the patent term adjustment to be indicated on the patent is one thousand sixty-four (1,064) days, not eight hundred and eight(808) days as calculated by the Office as of the mailing of the initial determination of patent term adjustment. Applicants request this correction solely on the basis that the Office will take in excess of three years to issue this patent.

As the instant application for patent term adjustment requests reconsideration of the patent term adjustment as it relates to the Office's failure to issue the patent within 3 years of the filing date, the application for patent term adjustment under 37 CFR 1.705(b) is **DISMISSED as PREMATURE**.

Knowledge of the actual date the patent issues is required to calculate the amount, if any, of additional patent term patentee is entitled to for Office failure to issue the patent within 3 years. See § 1.702(b). (This is true even where a request for continued examination (RCE) was filed). The computer will not undertake the § 1.702(b) calculation until the actual date of issuance of the patent has been determined. Likewise, the computer will not calculate any further Office delay under § 1.702(a)(4) or applicant delay under § 1.704(c)(10) until the actual date of issuance of the patent has been determined. As

such, the Office can not make a determination on the correctness of the patent term adjustment until the patent has issued.

Requesting reconsideration of the patent term adjustment to be indicated on the patent under 37 CFR 1.705(b) based on the initial determination of patent term adjustment and a projected issuance date of the patent (or even the filing date of the request for continued examination) is premature. Accordingly, it is appropriate to dismiss as premature such a request.

Rather than file an application for patent term adjustment under 37 CFR 1.705(b) contesting the 37 CFR 1.702(b) calculation at the time of the mailing of the notice of allowance, applicant is advised that they may wait until the time of the issuance of the patent and file a request for reconsideration of the patent term adjustment pursuant to 37 CFR 1.705(d). As the USPTO does not calculate the amount of time earned pursuant to 37 CFR 1.702(b) until the time of the issuance of the patent, the Office will consider any request for reconsideration of the patent term adjustment due to an error in the calculation of 37 CFR 1.702(b) to be timely if the request for reconsideration is filed within two months of the issuance of the patent. However, as to all other bases for contesting the initial determination of patent term adjustment received with the notice of allowance, applicant must timely file an application for patent term adjustment prior to the payment of the issue fee[1].

It is noted that any period of adjustment will be entered in light of 35 U.S.C. 154(B) GUARANTEE OF NO MORE THAN 3-YEAR APPLICATION PENDENCY, which provides that:

> Subject to the limitations under paragraph (2), if the issue of an original patent is delayed due to the failure of the United States Patent and Trademark Office to issue a

---

[1] For example, if applicant disputes both the calculation of patent term adjustment under 37 CFR 1.702(a)(1) for Office failure to mail a first Office action or notice of allowance not later than fourteen months after the date on which the application was filed and under 37 CFR 1.702(b) for Office failure to issue a patent within three years of the actual filing date of the application, then applicant must still timely file an application for patent term adjustment prior to the payment of the issue fee to contest the calculation of Office delay in issuing a first Office action or notice of allowance. See 37 CFR 1.705(b) and 35 U.S.C. 154(b)(3)(B). A dispute as to the calculation of the §1.702(a)(1) period raised on request for reconsideration of patent term adjustment under 37 CFR 1.705(d) will be dismissed as untimely filed.

patent within 3 years after the actual filing date of the application in the United States, not including –

(i) any time consumed by continued examination of the application requested by the applicant under section 132(b);

It is further noted that a Request for Continued Examination (RCE) was filed in this application on October 26, 2007.

The Office acknowledges submission of the $200.00 fee set forth in 37 CFR 1.18(e) for consideration of the application for patent term adjustment under 37 CFR 1.705(b).

Any request for reconsideration of the patent term adjustment indicated on the patent must be timely filed within 2 months after issuance pursuant to 37 CFR 1.705(d) and must include payment of the required fee under 37 CFR 1.18(e).

The Office of Data Management has been advised of this decision. This application is being referred to the Office of Data Management for issuance of the patent.

Telephone inquiries specific to this decision should be directed to the undersigned at (571) 272-3222.

/Kenya A. McLaughlin/

Kenya A. McLaughlin
Senior Petitions Attorney
Office of Petitions

UNITED STATES PATENT AND TRADEMARK OFFICE

Commissioner for Patents
United States Patent and Trademark Office
P.O. Box 1450
Alexandria, VA 22313-1450
www.uspto.gov

MR. CHRISTOPHER JOHN ROURK
JACKSON WALKER LLP
901 MAIN STREET, SUITE 6000
DALLAS TX 75202

MAILED

JUN 02 2011

OFFICE OF PETITIONS

In re Application :
Emmitt J. Smith III :
Application No. 10/703,373 : DECISION ON APPLICATION
Filed: November 7, 2003 : FOR PATENT TERM ADJUSTMENT
Attorney Docket No. 107504.00004 :

This is in response to the REQUEST FOR RECONSIDERATION OF PATENT TERM ADJUSTMENT UNDER 37 C.F.R. 1.705(b) filed February 14, 2011. Applicant requests that the determination of patent term adjustment be corrected from 26 days to 1668 days.

The application for patent term adjustment is **GRANTED** to the extent indicated herein.

On November 12, 2010, the Office mailed the Determination of Patent Term Adjustment under 35 U.S.C. 154(b) in the above-identified application. The Notice stated that the patent term adjustment to date is 26 days. The instant application for patent term adjustment was timely filed[1] on or before payment of the issue fee.

With respect to the patent term adjustment at the time of the mailing of the notice of allowance, applicants acknowledge the period of adjustment of 201 days for Office delay pursuant to 37 CFR 1.702(a)(1) and 10 days for Office delay pursuant to 37 CFR 1.702(a)(2)

Applicants argue however that the Patent Term Adjustment history in private PAIR incorrectly states that the decision on appeal on August 13, 2010 was "Examiner Affirmed." In fact, the Examiner was only affirmed in part, and Applicant timely submitted an amendment after the Board decision was rendered to place the claims in condition for allowance by amending the pending claims to include allowable subject matter as indicated by the Board. As such, an additional period of 1817 days of PTO delay from the date of the notice of appeal (November 21, 2005) to the date on which the notice of allowance was mailed (November 12, 2010), minus the 149 days of Applicant delay noted in the Patent Term Adjustment history in private PAIR, or 1668 days total, pursuant to 37 C.F.R. 1.703(e).

Patentee's arguments have been considered, and found persuasive to an extent.

[1] PALM records indicate that the issue fee was paid on February 14, 2011.

Pursuant to 37 CFR 1.703(e), the period of adjustment under § **1.702**(e) is the sum of the number of days, if any, in the period beginning on the date on which a notice of appeal to the Board of Patent Appeals and Interferences was filed under 35 U.S.C. **134** and § **41.31** of this title and ending on the date of a final decision in favor of the applicant by the Board of Patent Appeals and Interferences or by a Federal court in an appeal under 35 U.S.C. **141** or a civil action under 35 U.S.C. **145**.

In this instance, the delay for successful appellate review from the filing of the Notice of Appeal (November 4, 2008) to the mailing of the decision by the Board of Patent Appeals and Interferences (August 13, 2010), in the amount of 648 days should have been entered pursuant to 37 CFR 1.702(c).[2] Thus the patent term adjustment at the time the Notice of Allowance was mailed was 674 days (211 "A delay" days + 648 "C delay" days - 185 Applicant delay days), not 1668 days.

In view thereof, the correct determination of patent term adjustment at the time of the mailing of the notice of allowance is SIX HUNDRED SEVENTY-FOUR **(674)** days.

The Office acknowledges submission of the $200.00 fee set forth in 37 CFR 1.18(e). No additional fees are required.

Applicants are reminded that any delays by the Office pursuant to 37 CFR 1.702(a)(4) and 1.702(b) and any applicant delays under 37 CFR 1.704(c)(10) will be calculated at the time of the issuance of the patent and applicants will be notified of the revised patent term adjustment to be indicated on the patent in the Issue Notification letter that is mailed to applicants approximately three weeks prior to issuance.

The Office of Data Management has been advised of this decision. This matter is being referred to the Office of Data Management for issuance of the patent.

Telephone inquiries specific to this decision should be directed to the undersigned Petitions Attorney at (571) 272-3212.

Patricia Faison-Ball

Patricia Faison-Ball
Senior Petitions Attorney
Office of Petitions

Enclosure: Copy of Revised PALM Screen

[2]Under 35 U.S.C 154 (b)(1), an applicant is entitled (subject to certain conditions and limitations) to patent term adjustment fot the following reason: (1) if the USPTO fails to take certain actions during the examination and issue process within specified time frames (35 U.S.C. 154(b)(1)(A)), which are known as the "A" delays; (2) if the USPTO fails to issue a patent within three years of the actual filing date of the application (35 U.S.C. 154(b)(1)(B), which are known as the "B" delays; and (3) for delays due to interference, secrecy order or successful appellate review (35 U.S.C. 154(b)(1)(C)), which are known as the "C" delays.

Patent Term Adjustments

PTA/PTE Information

Application Number*: 10703373 Search | Explanation of PTA Calculation | Explanation of PTE Calculation

PTA Calculations for Application: 10703373

Application Filing Date	11/07/2003	OverLapping Days Between (A and B) or (A and C)	0
Issue Date of Patent		Non-Overlapping USPTO Delays:	211
A Delays	211	PTO Manual Adjustment	648
B Delays	0	Applicant Delay (APPL)	185
C Delays	0	Total PTA (days)	674

* - Sorted Column

File Contents History

Action Number	Action Recorded Date	Action Due Date	Action Code	Action Description	Duration PTO	Duration APPL	Parent Action Number
93	06/01/2011		P028	Adjustment of PTA Calculation by PTO	648		0
83	11/12/2010		MN/=.	Mail Notice of Allowance			0
82	11/09/2010		IREV	Issue Revision Completed			0
81	11/09/2010		DVER	Document Verification			0
80	11/09/2010		N/=.	Notice of Allowance Data Verification Completed			0
79	11/09/2010		CNTA	Allowability Notice			0
76	10/12/2010		BD.A	Amendment/Argument after BPAI Decision			0
75	08/13/2010		MAPDA	Mail BPAI Decision on Appeal - Affirmed			0
74	08/13/2010		APDA	BPAI Decision - Examiner Affirmed			0
73	08/13/2010		MAPDN	Mail - BPAI Decision 41.50(b) In IFW: 196(b)			0
72	08/13/2010		APDN	BPAI Decision 41.50(b)			0
71	05/06/2009		AP_DK_M	Docketing Notice Mailed to Appellant			0
70	05/05/2009		APAS	Assignment of Appeal Number			0
69	04/21/2009		APWD	Appeal Awaiting BPAI Docketing			0
68	04/17/2009		MRBNE	Mail Reply Brief Noted by Examiner			0
67	04/16/2009		RBNE	Reply Brief Noted by Examiner			0
66	04/15/2009		FWDX	Date Forwarded to Examiner			0
65	03/26/2009		APRB	Reply Brief Filed			0
64	02/18/2009		PACC	Exam. Ans. Review Complete			0
63	01/26/2009	11/04/2008	MAPEA	Mail Examiner's Answer			58
62	01/21/2009		APEA	Examiner's Answer to Appeal Brief			0
61	12/10/2008		APBR	Appeal Brief Review Complete			0
60	12/10/2008		FWDX	Date Forwarded to Examiner			0
59	11/21/2008		AP.B	Appeal Brief Filed			0
58	11/04/2008		N/AP	Notice of Appeal Filed			0
57	08/06/2008	02/21/2008	MCTNF	Mail Non-Final Rejection			47
56	08/04/2008		CTNF	Non-Final Rejection			0
55	06/10/2008		DOCK	Case Docketed to Examiner in GAU			0
54	05/22/2008		FWDX	Date Forwarded to Examiner			0
53	05/19/2008		AP.B	Appeal Brief Filed			0
52	05/12/2008		APBD	Notice -- Defective Appeal Brief			0
51	05/08/2008		APBR	Appeal Brief Review Complete			0
50	05/08/2008		FWDX	Date Forwarded to Examiner			0
49.1	05/07/2008		APBI	Defective / Incomplete Appeal Brief Filed			0
49	05/07/2008		AP.B	Appeal Brief Filed			0
48	05/07/2008		XT/G	Request for Extension of Time - Granted			0
47	02/21/2008	01/17/2008	N/AP	Notice of Appeal Filed		35	45
46	02/21/2008		XT/G	Request for Extension of Time - Granted			0
45	10/17/2007	10/07/2007	MCTNF	Mail Non-Final Rejection	10		41
44	10/11/2007		CTNF	Non-Final Rejection			0
43	07/16/2007		APBR	Appeal Brief Review Complete			0
42	07/16/2007		FWDX	Date Forwarded to Examiner			0
39	06/13/2007		DOCK	Case Docketed to Examiner in GAU			0
41	06/07/2007		AP.B	Appeal Brief Filed			0
40	06/07/2007		XT/G	Request for Extension of Time - Granted			0
38	04/03/2007		MCTAV	Mail Advisory Action (PTOL - 303)			0
37	03/31/2007		CTAV	Advisory Action (PTOL-303)			0
35	03/13/2007		FWDX	Date Forwarded to Examiner			0
36	03/05/2007	03/04/2007	N/AP	Notice of Appeal Filed		1	33
34	03/05/2007		A.NE	Amendment after Final Rejection			0
33	12/04/2006	05/17/2006	MCTFR	Mail Final Rejection (PTOL - 326)	201		29
32	11/30/2006		CTFR	Final Rejection			0
30	02/01/2006		FWDX	Date Forwarded to Examiner			0
29	01/17/2006	10/22/2005	A.NE	Amendment after Final Rejection		87	27

28	01/17/2006		XT/G	Request for Extension of Time - Granted		0
31	11/21/2005		N/AP	Notice of Appeal Filed		0
27	07/22/2005		MCTFR	Mail Final Rejection (PTOL - 326)		0
26	07/21/2005		CTFR	Final Rejection		0
25	05/13/2005		FWDX	Date Forwarded to Examiner		0
24	05/09/2005	03/08/2005	A...	Response after Non-Final Action	62	22
23	05/09/2005		XT/G	Request for Extension of Time - Granted		0
22	12/08/2004		MCTNF	Mail Non-Final Rejection		0
21	12/07/2004		CTNF	Non-Final Rejection		0
20	12/01/2004		DOCK	Case Docketed to Examiner in GAU		0
18	10/04/2004		PA..	Change in Power of Attorney (May Include Associate POA)		0
19	10/02/2004		C.AD	Correspondence Address Change		0
16	10/02/2004		FWDX	Date Forwarded to Examiner		0
15	09/29/2004		A...	Response after Non-Final Action		0
14	06/29/2004		MCTNF	Mail Non-Final Rejection		0
12	06/22/2004		CTNF	Non-Final Rejection		0
11	04/27/2004		TSSCOMP	IFW TSS Processing by Tech Center Complete		0
10	04/27/2004		DOCK	Case Docketed to Examiner in GAU		0
8	02/09/2004		WROIPE	Application Return from OIPE		0
7	02/09/2004		ROIPE	Application Return TO OIPE		0
6	02/09/2004		OIPE	Application Dispatched from OIPE		0
5	02/09/2004		COMP	Application Is Now Complete		0
4	01/28/2004		L194	Cleared by OIPE CSR		0
3	01/28/2004		CLSS	CASE CLASSIFIED BY OIPE		0
2	12/22/2003		SCAN	IFW Scan & PACR Auto Security Review		0
17	11/17/2003		A.PE	Preliminary Amendment		0
13.7	11/07/2003		M844	Information Disclosure Statement (IDS) Filed		0
13	11/07/2003		WIDS	Information Disclosure Statement (IDS) Filed		0
9	11/07/2003		RCAP	Reference capture on IDS		0
1	11/07/2003		IEXX	Initial Exam Team nn		0

Export to: Excel

UNITED STATES PATENT AND TRADEMARK OFFICE

UNITED STATES DEPARTMENT OF COMMERCE
United States Patent and Trademark Office
Address: COMMISSIONER FOR PATENTS
P.O. Box 1450
Alexandria, Virginia 22313-1450
www.uspto.gov

APPLICATION NO.	FILING DATE	FIRST NAMED INVENTOR	ATTORNEY DOCKET NO.	CONFIRMATION NO.
10/703,469	11/10/2003	Evelio Pina	P56393A	1384

8439 7590 08/23/2010
ROBERT E. BUSHNELL & LAW FIRM
2029 K STREET NW
SUITE 600
WASHINGTON, DC 20006-1004

EXAMINER
PAINTER, BRANON C

ART UNIT	PAPER NUMBER
3635	

NOTIFICATION DATE	DELIVERY MODE
08/23/2010	ELECTRONIC

Please find below and/or attached an Office communication concerning this application or proceeding.

The time period for reply, if any, is set in the attached communication.

Notice of the Office communication was sent electronically on above-indicated "Notification Date" to the following e-mail address(es):

rebushnell@aol.com
mail@rebushnell.com
info@rebushnell.com

UNITED STATES PATENT AND TRADEMARK OFFICE

Commissioner for Patents
United States Patent and Trademark Office
P.O. Box 1450
Alexandria, VA 22313-1450
www.uspto.gov

AUG 20 2010

ROBERT E. BUSHNELL & LAW FIRM
2029 K STREET NW
SUITE 600
WASHINGTON DC 20006-1004

In re application of	:	
Evelio PINA et al.	:	DECISION ON PETITION
Application No. 10/703,469	:	UNDER 37 CFR § 1.181
Filed: November 10, 2003	:	
For: FORM ASSEMBLY FOR FORMING	:	
AN EAVE, A ROOF SLAB, AND A	:	
PERIMETER BEAM IN A MONOLITHIC	:	
STRUCTURE AND METHOD OF	:	
FORMING THE SAME	:	

This is a decision on the petition filed on August 03, 2009, under 37 CFR §1.181 to request the withdrawal of the drawing objection and the requirement of replacement drawings set forth in a Office action mailed May 11, 2009.

The petition is DISMISSED AS MOOT.

A review of the file record reveals that the examiner objected to the drawings and required replacement drawings in the Office action mailed on May 11, 2009. Applicants filed a response on August 3, 2009 canceling claims 1-34, adding claims 35-45 and stating that new copies of drawings were submitted along with a petition to overcome the drawing objection. This petition was timely filed on August 3, 2009; however, there were no new copies of drawings in the record. A final Office action was mailed on November 30, 2009 in which there was no mention of the drawing objection or the requirement of corrected drawings.

In view of the fact the drawing objection and replacement drawings requirement were vacated in the final Office action dated November 30, 2009 and the application became abandoned for failure to timely pay the issue fee, applicants' request for withdrawal of the drawing objection is dismissed as moot.

Any questions regarding this letter should be directed to Supervisory Patent Examiner Richard Chilcot at (571) 272-6777.

Katherine Matecki

Katherine A. Matecki, Director
Patent Technology Center 3600
(571) 272-5250

rc/lm: 8/5/10

LM

UNITED STATES PATENT AND TRADEMARK OFFICE

Commissioner for Patents
United States Patent and Trademark Office
P.O. Box 1450
Alexandria, VA 22313-1450
www.uspto.gov

In re Patent No. 6994753
Issue Date: February 7,2006
Application No. 10703483
Filed: November 10,2003
Attorney Docket No. T2740-907459US02

:
:DECISION GRANTING PETITION
:UNDER 37 CFR 1.378(c)
:

This is a decision on the electronic petition, filed October 19,2010 ,under 37 CFR 1.378(c) to accept the unintentionally delayed payment of the 3.5 year maintenance fee for the above-identified patent.

The petition is **GRANTED**.

The maintenance fee is accepted, and the above-identified patent reinstated as of October 19,2010 .
This decision also constitutes notice that the fee has been accepted. An electronic copy of the petition and this decision has been created as an entry in the Image File Wrapper. Nevertheless, petitioner should print and retain an independent copy.

Telephone inquiries related to this electronic decision should be directed to the Electronic Business Center at 1-866-217-9197.

PTO/SB/66 (03-09)
Approved for use through 03/31/2012. OMB 0651-0016
U.S. Patent and Trademark Office: U.S. DEPARTMENT OF COMMERCE
Under the Paperwork Reduction Act of 1995, no persons are required to respond to a collection of information unless it displays valid OMB control number.

PETITION TO ACCEPT UNINTENTIONALLY DELAYED PAYMENT OF MAINTENANCE FEE IN AN EXPIRED PATENT (37 CFR 1.378(c))

Patent Number	Issue Date (YYYY-MM-DD)	Application Number	Filing Date (YYYY-MM-DD)	Docket Number (if applicable)
6994753	2006-02-07	10703483	2003-11-10	

CAUTION: Maintenance fee (and surcharge, if any) payment must correctly identify: (1) the patent number and (2) the application number of the actual U.S. application leading to issuance of that patent to ensure the fee(s) is/are associated with the correct patent. 37 CFR 1.366(c) and (d).

SMALL ENTITY
☒ Patentee claims, or has previously claimed, small entity status. See 37 CFR 1.27.

LOSS OF ENTITLEMENT TO SMALL ENTITY STATUS
☐ Patentee is no longer entitled to small entity status. See 37 CFR 1.27(g)

NOT Small Entity		Small Entity	
Fee	Code	Fee	Code
○ 3 ½ year	(1551)	◉ 3 ½ year	(2551)
○ 7 ½ year	(1552)	○ 7 ½ year	(2552)
○ 11 ½ year	(1553)	○ 11 ½ year	(2553)

SURCHARGE
The surcharge required by 37 CFR 1.20(i)(2) (Fee Code 1558) must be paid as a condition of accepting unintentionally delayed payment of the maintenance fee.

MAINTENANCE FEE (37 CFR 1.20(e)-(g))
The appropriate maintenance fee must be submitted with this petition.

STATEMENT
THE UNDERSIGNED CERTIFIES THAT THE DELAY IN PAYMENT OF THE MAINTENANCE FEE TO THIS PATENT WAS UNINTENTIONAL

PETITIONER(S) REQUEST THAT THE DELAYED PAYMENT OF THE MAINTENANCE FEE BE ACCEPTED AND THE PATENT REINSTATED

THIS PORTION MUST BE COMPLETED BY THE SIGNATORY OR SIGNATORIES

37 CFR 1.378(d) states: "Any petition under this section must be signed by an attorney or agent registered to practice before the Patent and Trademark Office, or by the patentee, the assignee, or other party in interest."

I certify, in accordance with 37 CFR 1.4(d)(4) that I am

○ An attorney or agent registered to practice before the Patent and Trademark Office

◉ A sole patentee

○ A joint patentee; I certify that I am authorized to sign this submission on behalf of all the other patentees.

○ A joint patentee; all of whom are signing this e-petition

○ The assignee of record of the entire interest

Under the Paperwork Reduction Act of 1995, no persons are required to respond to a collection of information unless it displays valid OMB control number.

Sole Patentee			
A signature of the applicant or representative is required in accordance with 37 CFR 1.33 and 10.18. Please see 37 CFR 1.4(d) for the form of the signature.			
Signature	/Todd A. Rae/	Date (YYYY-MM-DD)	2010-10-19
Name	Todd A. Rae		

This collection of information is required by 37 CFR 1.378(c). The information is required to obtain or retain a benefit by the public which is to file (and by the USPTO to process) an application. Confidentiality is governed by 35 U.S.C. 122 and 37 CFR 1.11 and 1.14. This collection is estimated to take 1 hour to complete, including gathering, preparing, and submitting the completed application form to the USPTO. Time will vary depending upon the individual case. Any comments on the amount of time you require to complete this form and/ or suggestions for reducing this burden, should be sent to the Chief Information Officer, U.S. Patent and Trademark Office, U.S. Department of Commerce, P.O. Box 1450, Alexandria, VA 22313-1450. DO NOT SEND FEES OR COMPLETED FORMS TO THIS ADDRESS. **This form can only be used when in conjunction with EFS-Web. If this form is mailed to the USPTO, it may cause delays in reinstating the patent.**

Privacy Act Statement

The Privacy Act of 1974 (P.L. 93-579) requires that you be given certain information in connection with your submission of the attached form related to a patent application or patent. Accordingly, pursuant to the requirements of the Act, please be advised that: (1) the general authority for the collection of this information is 35 U.S.C. 2(b)(2); (2) furnishing of the information solicited is voluntary; and (3) the principal purpose for which the information is used by the U.S. Patent and Trademark Office is to process and/or examine your submission related to a patent application or patent. If you do not furnish the requested information, the U.S. Patent and Trademark Office may not be able to process and/or examine your submission, which may result in termination of proceedings or abandonment of the application or expiration of the patent.

The information provided by you in this form will be subject to the following routine uses:

1. The information on this form will be treated confidentially to the extent allowed under the Freedom of Information Act (5 U.S.C. 552) and the Privacy Act (5 U.S.C. 552a). Records from this system of records may be disclosed to the Department of Justice to determine whether the Freedom of Information Act requires disclosure of these records.

2. A record from this system of records may be disclosed, as a routine use, in the course of presenting evidence to a court, magistrate, or administrative tribunal, including disclosures to opposing counsel in the course of settlement negotiations.

3. A record in this system of records may be disclosed, as a routine use, to a Member of Congress submitting a request involving an individual, to whom the record pertains, when the individual has requested assistance from the Member with respect to the subject matter of the record.

4. A record in this system of records may be disclosed, as a routine use, to a contractor of the Agency having need for the information in order to perform a contract. Recipients of information shall be required to comply with the requirements of the Privacy Act of 1974, as amended, pursuant to 5 U.S.C. 552a(m).

5. A record related to an International Application filed under the Patent Cooperation Treaty in this system of records may be disclosed, as a routine use, to the International Bureau of the World Intellectual Property Organization, pursuant to the Patent Cooperation Treaty.

6. A record in this system of records may be disclosed, as a routine use, to another federal agency for purposes of National Security review (35 U.S.C. 181) and for review pursuant to the Atomic Energy Act (42 U.S.C. 218(c)).

7. A record from this system of records may be disclosed, as a routine use, to the Administrator, General Services, or his/her designee, during an inspection of records conducted by GSA as part of that agency's responsibility to recommend improvements in records management practices and programs, under authority of 44 U.S.C. 2904 and 2906. Such disclosure shall be made in accordance with the GSA regulations governing inspection of records for this purpose, and any other relevant (i.e., GSA or Commerce) directive. Such disclosure shall not be used to make determinations about individuals.

8. A record from this system of records may be disclosed, as a routine use, to the public after either publication of the application pursuant to 35 U.S.C. 122(b) or issuance of a patent pursuant to 35 U.S.C. 151. Further, a record may be disclosed, subject to the limitations of 37 CFR 1.14, as a routine use, to the public if the record was filed in an application which became abandoned or in which the proceedings were terminated and which application is referenced by either a published application, an application open to public inspections or an issued patent.

9. A record from this system of records may be disclosed, as a routine use, to a Federal, State, or local law enforcement agency, if the USPTO becomes aware of a violation or potential violation of law or regulation.

PTO/SB/131 (02-10)
Approved for use through 02/28/2011. OMB 0651-0020
U.S. Patent and Trademark Office; U. S. DEPARTMENT OF COMMERCE

Under the Paperwork Reduction Act of 1995, no persons are required to respond to a collection of information unless it displays a valid OMB control number.

REQUEST FOR RECALCULATION OF PATENT TERM ADJUSTMENT IN VIEW OF *WYETH**

Attorney Docket Number:	136922003301		
Application Number:	10/703,681	Filing Date (or 371(b) or (f) Date):	November 7, 2003
Patent Number:	7,764,790	Issue Date:	July 27, 2010
First Named Inventor:	John O. RYAN		
Title:	SCALING INDEPENDENT TECHNIQUE FOR WATERMARKING IMAGES		

PATENTEE HEREBY REQUESTS RECALCULATION OF THE PATENT TERM ADJUSTMENT (PTA) UNDER 35 USC 154(b) INDICATED ON THE ABOVE-IDENTIFIED PATENT. T HE PATENTEE'S SOLE BASIS FOR REQUESTING THE RECALCULATION IS THE USPTO'S PRE-*WYETH* INTERPRETATION OF 35 U.S.C. 154(b)(2)(A).

Note: This form is only for requesting a recalculation of PTA for patents issued before March 2, 2010, if the sole basis for requesting the recalculation is the USPTO's pre-*Wyeth* interpretation of 35 U.S.C. 154(b)(2)(A). See Instruction Sheet on page 2 for more information.

Patentees are reminded that to preserve the right to review in the United States District Court for the District of Columbia of the USPTO's patent term adjustment determination, a patentee must ensure that he or she also takes the steps required under 35 U.S.C. 154(b)(3) and (b)(4) and 37 CFR 1.705 in a timely manner.

**Wyeth v. Kappos*, No. 2009-1120 (Fed. Cir., Jan. 7, 2010).

Signature		Date	August 24, 2010
Name (Print/Typed)	Norman R. Klivans	Registration Number	33,003

***Note**: Signatures of all the inventors or assignees of record of the entire interest or their representative(s) are required in accordance with 37 CFR 1.33 and 11.18. Please see 37 CFR 1.4(d) for the form of the signature. If necessary, submit multiple forms if more than one signature, see below**.*

[X] *Total of 1 Form(s) are submitted.

Client Reference No.: 0191C

UNITED STATES PATENT AND TRADEMARK OFFICE

UNITED STATES DEPARTMENT OF COMMERCE
United States Patent and Trademark Office
Address: COMMISSIONER FOR PATENTS
P.O. Box 1450
Alexandria, Virginia 22313-1450
www.uspto.gov

MORRISON & FOERSTER LLP
755 PAGE MILL RD
PALO ALTO, CA 94304-1018

Mail Date: 09/01/2010

Applicant	: John O. Ryan	: DECISION ON REQUEST FOR
Patent Number	: 7764790	: RECALCULATION of PATENT
Issue Date	: 07/27/2010	: TERM ADJUSTMENT IN VIEW
Application No	: 10/703,681	: OF WYETH
Filed	: 11/07/2003	:
		:

The Patentee's Request for Recalculation is **DISMISSED.**

This Request is deemed ineligible for consideration for one or more of the following reasons:

(A). The patent for which PTA recalculation is requested is either a design or reissue application or is a reexamination proceeding;

(B). The patent for which PTA recalculation is requested resulted from a utility or plant application filed under 35 USC 111(a) before May 29, 2000 and no CPA filed in the application on/after May 29, 2000;

(C). The patent for which PTA recalculation is requested resulted from an international application in which the international filing date was before May 29, 2000 and no CPA filed in the application on/after May 29, 2000;

(D). The patent for which PTA recalculation is requested issued on/after March 2, 2010;

(E). The Request for Recalculation was filed more than 180 days after the grant date of the patent and the request was not filed within two months of a dismissal of a request for reconsideration of the of the patent term under 37 CFR 1.705(d);

(F). The Request for Recalculation is not solely limited to USPTO pre-Wyeth interpretation of 35 U.S.C. 154(b)(2)(A);

or

(G). A civil action was filed pursuant to 35 U.S.C. 154(b)(4)(A)concerning the same patent at issue in this request.

Patentee may file a reply to this decision dismissing the Request for Recalculation. Patentee must file such reply within one month or thirty days, whichever is longer, of the mail date of the decision dismissing the Request for Recalculation. No fee is required if patentee is asserting in the reply that the dismissal for ineligibility is improper.

Patentee should use document code PET.OP if electronically filing a reply to this dismissal. If the USPTO finds that the request was improperly deemed ineligible, the USPTO will mail applicant a recalculation determination.

Patentee should be aware that in order to preserve the right to review in the United States District Court for the District of Columbia of the USPTO patent term adjustment determination, patentee must ensure that he or she also take the steps required under 35 U.S.C. 154(b)(4)(A). Nothing in the request for recalculation should be construed as providing an alternative time frame for commencing a civil action under 35 U.S.C. 154 (b)(4)(A).

Any questions concerning this decision should be directed to the Office of Patent Legal Administration at 571-272-7702.

UNITED STATES PATENT AND TRADEMARK OFFICE

Commissioner for Patents
United States Patent and Trademark Office
P.O. Box 1450
Alexandria, VA 22313-1450
www.uspto.gov

MAILED

MAR 01 2011

OFFICE OF PETITIONS

CLARK & ELBING LLP
101 FEDERAL STREET
BOSTON, MA 0211

In re Patent No. 7,053,064	:	
Issue Date: May 30, 2006	:	
Application No. 10/703,695	:	ON PETITION
Filed: November 6, 2003	:	
Attorney Docket No. 04843/119002	:	

This is a notice regarding your request for acceptance of a fee deficiency submission under 37 CFR 1.28, filed January 4, 2011.

The Office no longer investigates or rejects original or reissue patent under 37 CFR 1.56. **1098 Off. Gaz. Pat. Office 502 (January 3, 1989).** Therefore, nothing in this Notice is intended to imply that an investigation was done.

Your fee deficiency submission under 37 CFR 1.28 is hereby **ACCEPTED**.

This patent is no longer entitled to small entity status. Accordingly, all future fees paid in this patent must be paid at the large entity rate.

Telephone inquiries concerning this decision should be directed to the undersigned at (571) 272-6059.

A Kelley

Alicia Kelley
Petitions Examiner
Office of Petitions

Best Available Copy

SPE RESPONSE FOR CERTIFICATE OF CORRECTION

DATE : 10-27-11

TO SPE OF : ART UNIT 1785

SUBJECT : Request for Certificate of Correction for Appl. No.: 10/703740 Patent No.: 7947345

CofC mailroom date: 09-09-11

Please respond to this request for a certificate of correction within 7 days.

FOR IFW FILES:

Please review the requested changes/corrections as shown in the **COCIN** document(s) in the IFW application image. No new matter should be introduced, nor should the scope or meaning of the claims be changed.

Please complete the response (see below) and forward the completed response to scanning using document code **COCX**.

FOR PAPER FILES:

Please review the requested changes/corrections as shown in the attached certificate of correction. Please complete this form (see below) and forward it with the file to:

Certificates of Correction Branch (CofC)
Randolph Square – 9D10-A
Palm Location 7580

Note:

Angela Green 571.272.9005
CofC Branch 703-756-1814

Thank You For Your Assistance

The request for issuing the above-identified correction(s) is hereby:
Note your decision on the appropriate box.

- ☐ **Approved** — **All** changes apply.
- ☐ **Approved in Part** — Specify below which changes **do not** apply.
- ☒ **Denied** — State the reasons for denial below.

Comments: Line 55 in column 6 is claim 6, not claim 5. If the last line in claim 5 is intended, there are two recitations of "surface".

/Bruce Hess/

Primary Examiner

SPE **Art Unit** 1785

UNITED STATES PATENT AND TRADEMARK OFFICE

Commissioner for Patents
United States Patent and Trademark Office
P.O. Box 1450
Alexandria, VA 22313-1450
www.uspto.gov

Date Mailed :January 11, 2012

Patent No. :7947345
Inventor :Eric L. Burch et al.
Patent Issued :May 24, 2011
Title :SYNTHESIS OF POLY(ETHYLENE AMINE) ON AN OXIDE SUPPORT

Re: Request for Certificate of Correction

Consideration has been given your request for the issuance of a certificate of correction for the above-identified patent under the provisions of Rule(s) 1.322.

Inspection of the application for the patent reveals that in connection with the alleged error pertaining to claim 5 as requested; Line 55 in column 6, is claim 6, not claim 5. If the last line in claim 5 is intended, there are two recitations of "surface".

Accordingly, a certificate of correction is not warranted.

In view of the foregoing applicants request in this matter is hereby denied. Any telephone inquiry concerning this communication should be directed to Ms. A. Green at (571) 272-9005.

Mary Diggs, Supervisor
Decisions & Certificates
of Correction Branch
(703) 756-1580 or (571) 272-9005

Hewlett-Packard Company
Intellectual Property Administration
3404 E. Harmony Road
Mail Stop 35
Fort Collins, CO 80528

/arg

UNITED STATES PATENT AND TRADEMARK OFFICE

Commissioner for Patents
United States Patent and Trademark Office
P.O. Box 1450
Alexandria, VA 22313-1450
www.uspto.gov

K&L GATES LLP
210 SIXTH AVENUE
PITTSBURGH, PA 15222-2613

MAILED

JAN 18 2011

OFFICE OF PETITIONS

In re Application of

Serkan SAVASOGLU, et *al.*
Application No. 10/703,975
Filed: November 7, 2003
Attorney Docket No. **030588**

DECISION ON PETITION TO WITHDRAW FROM RECORD

This is a decision on the Request to Withdraw as attorney or agent of record under 37 C.F.R. § 1.36(b), filed November 3, 2010.

The request is **NOT APPROVED.**

The request to withdraw as attorney/agent of record and change of correspondence address is hereby not accepted. Petitioner has not complied with current USPTO requirements, set forth in 37 CFR 10.40 concerning Request for Withdrawal as Attorney and Change of Correspondence Address. Specifically, pursuant to 37 CFR 10.40, the Office will require the practitioner(s) to certify that he, she or they have:

> (1) given reasonable notice to the client, prior to the expiration of the reply period, that the practitioner(s) intends to withdraw from employment;
>
> (2) delivered to the client or duly authorized representative of the client all papers and property (including funds) to which the client is entitled; and
>
> (3) notified the client of any replies that may be due and the time frame within which the client must respond.

Petitioner has not complied with the above certifications. Also, petitioner has not properly submitted forwarding correspondence address information for the application.

The Office will only accept correspondence address changes to the most current address information provided for the assignee of the entire interest *who properly became of record under 37 CFR 3.71*, or if no assignee of the entire interest has properly been made of record, the most current address information provided for the first named inventor. 37 CFR 3.71 (c) states:

> ***An assignee becomes of record either in a national patent application or a reexamination proceeding by filing a statement in compliance with § 3.73 (b) that is signed by a party who is authorized to act on behalf of the assignee.***

Inquires concerning either the examination or status of the application should be directed to the Technology Center at (571) 272-3700. Telephone inquiries concerning this decision should be directed to the undersigned at (571) 272-7253.

/Monica A. Graves/
Petitions Examiner, Office of Petitions

UNITED STATES PATENT AND TRADEMARK OFFICE

Commissioner for Patents
United States Patent and Trademark Office
P.O. Box 1450
Alexandria, VA 22313-1450
www.uspto.gov

K&L GATES LLP
210 SIXTH AVENUE
PITTSBURGH PA 15222-2613

MAILED

DEC 02 2010

OFFICE OF PETITIONS

In re Application of	:	
Savasoglu et al.	:	DECISION ON PETITION
Application No. 10/703,978	:	TO WITHDRAW
Filed: November 7, 2003	:	FROM RECORD
Attorney Docket No. 030587	:	

This is a decision on the Request to Withdraw as attorney or agent of record under 37 C.F.R. § 1.36(b), filed November 3, 2010.

The request is **APPROVED**.

The request was signed by Daniel R. Miller on behalf of himself, as he has accepted an offer of employment from the USPTO. Daniel R. Miller has been withdrawn as attorney of record. All other current attorneys/agents of record will remain as such.

All future correspondence will be continued to be directed to the address indicated above.

There is an outstanding Office action, mailed November 23, 2010, which requires a reply. Failure to timely and properly do so will result in abandonment of the instant application.

Telephone inquires concerning this decision should be directed to the undersigned at (571) 272-3206. All other inquires concerning either the examination or status of the application should be directed to the Technology Center.

Liana Walsh
Petitions Examiner
Office of Petitions

UNITED STATES PATENT AND TRADEMARK OFFICE

Commissioner for Patents
United States Patent and Trademark Office
P.O. Box 1450
Alexandria, VA 22313-1450
www.uspto.gov

Kenneth J. LuKacher, Esq.
South Winton Court
Suite 204
3136 Winton Road South
Rochester NY 14623

MAILED

OCT 20 2010

OFFICE OF PETITIONS

In re Application of :
Prokupets, et al. :
Application No. 10/704,000 : ON PETITION
Filed: November 7, 2003 :
Attorney Docket No. LNL-004 :

This is a decision on the petition under 37 CFR 1.137(a), filed April 13, 2010, to revive the above-identified application.

The petition under 37 CFR 1.137(a) is **DISMISSED**.[1]

This application became abandoned for failure to file a timely response to the final Office action mailed April 7, 2009, which set a shortened statutory period for reply of three months from its mailing date. Extensions of time under 37 CFR 1.136(a) were available. No response was received within the allowable period and the application became abandoned on July 8, 2009. A Notice of Abandonment was mailed March 26, 2010.

A grantable petition under 37 CFR 1.137(a)[2] must be accompanied by: (1) the required reply,[3] unless previously filed; (2) the petition fee as set forth in 37 CFR 1.17(1); (3) a showing to the satisfaction of the Commissioner that the entire delay in filing the required reply from the due date for the reply until the filing of a grantable petition pursuant to this paragraph was unavoidable; and (4) any terminal disclaimer required by 37 CFR 1.137(c).

The instant petition lacks item (3).

The Commissioner is responsible for determining the standard for unavoidable

[1] Petitioner is advised that this decision was made after consultation with the supervisory staff in the Office of Petitions.

[2] As amended effective December 1, 1997. See Changes to Patent Practice and Procedure; Final Rule Notice 62 Fed. Reg. 53131, 53194-95 (October 10, 1997), 1203 Off. Gaz. Pat. Office 63, 119-20 (October 21, 1997).

[3] In a nonprovisional application abandoned for failure to prosecute, the required reply may be met by the filing of a continuing application. In an application or patent, abandoned or lapsed for failure to pay the issue fee or any portion thereof, the required reply must be the payment of the issue fee or any outstanding balance thereof.

delay and for applying that standard.

"In the specialized field of patent law, . . . the Commissioner of Patent and Trademarks is primarily responsible for the application and enforcement of the various narrow and technical statutory and regulatory provisions. The Commissioner's interpretation of those provisions is entitled to considerable deference."[4]

"[T]he Commissioner's discretion cannot remain wholly uncontrolled, if the facts **clearly** demonstrate that the applicant's delay in prosecuting the application was unavoidable, and that the Commissioner's adverse determination lacked **any** basis in reason or common sense."[5]

"The court's review of a Commissioner's decision is 'limited, however, to a determination of whether the agency finding was arbitrary, capricious, an abuse of discretion, or otherwise not in accordance with the law.'"[6]
"The scope of review under the arbitrary and capricious standard is narrow and a court is not to substitute its judgment for that of the agency."[7]

The standard

"[T]he question of whether an applicant's delay in prosecuting an application was unavoidable must be decided on a case-by-case basis, taking all of the facts and circumstances into account."[8]

The general question asked by the Office is: "Did petitioner act as a reasonable and prudent person in relation to his most important business?"[9] Nonawarness of a PTO rule will not constitute unavoidable delay.[10]

---

[4]Rydeen v. Quigg, 748 F.Supp. 900, 904, 16 U.S.P.Q.2d (BNA) 1876 (D.D.C. 1990), aff'd without opinion (Rule 36), 937 F.2d 623 (Fed. Cir.1991) (citing Morganroth v. Quigg, 885 F.2d 843, 848, 12 U.S.P.Q.2d (BNA) 1125 (Fed. Cir. 1989); Ethicon, Inc. v. Quigg 849 F.2d 1422, 7 U.S.P.Q.2d (BNA 1152 (Fed. Cir. 1988) ("an agency' interpretation of a statute it administers is entitled to deference"); see also Chevron U.S.A. Inc. v. Natural Resources Defence Council, Inc., 467 U.S. 837, 844, 81 L. Ed. 694, 104 S. Ct. 2778 (1984) ("if the statute is silent or ambiguous with respect to the specific issue, the question for the court is whether the agency's answer is based on a permissible construction of the statute.")

[5]Commissariat A L'Energie Atomique et al. v. Watson, 274 F.2d 594, 597, 124 U.S.P.Q. (BNA) 126 (D.C. Cir. 1960) (emphasis added).

[6]Haines v. Quigg, 673 F. Supp. 314, 316, 5 U.S.P.Q.2d (BNA) 1130 (N.D. Ind. 1987) (citing Camp v. Pitts, 411 U.S. 138, 93 S. Ct.1241, 1244 (1973) (citing 5 U.S.C. §706 (2)(A)); Beerly v. Dept. of Treasury, 768 F.2d 942, 945 (7th Cir. 1985); Smith v. Mossinghoff, 217 U.S. App. D.C. 27, 671 F.2d 533, 538 (D.C. Cir.1982)).

[7]Ray v. Lehman, 55 F.3d 606, 608, 34 U.S.P.Q2d (BNA) 1786 (Fed. Cir. 1995) (citing Motor Vehicles Mfrs. Ass'n v. State Farm Mut. Auto. Ins. Co., 463 U.S. 29, 43, 77 L.Ed.2d 443, 103 S. Ct. 2856 (1983)).

[8]Id.

[9]See In re Mattulah, 38 App. D.C. 497 (D.C. Cir. 1912).

[10]See Smith v. Mossinghoff, 671 F.2d 533, 538, 213 U.S.P.Q. (BNA) 977 (Fed. Cir. 1982) (citing Potter v. Dann, 201 U.S.P.Q. (BNA) 574 (D.D.C. 1978) for the proposition that counsel's nonawarness of PTO rules does not constitute "unavoidable" delay)). Although court decisions have only addressed the issue of lack of knowledge of an attorney, there is no reason to expect a different result due to lack of knowledge on the part of a pro se (one who prosecutes on his own) applicant. It would be inequitable for a court to determine that a client who spends his hard earned money on an attorney who happens not to know a

Application of the standard to the current facts and circumstances

In the instant petition, petitioner maintains that the circumstances leading to the abandonment of the application meet the aforementioned unavoidable standard and, therefore, petitioner qualifies for relief under 37 CFR 1.137(a). In support thereof, petitioner asserts the examiner assigned to this application agreed to provide a new search and a new Office action in response to the amendment filed January 7, 2009.

With regard to item (3) above, the aforementioned argument of petitioner in support of petitioner's belief that the above-cited application was unavoidably abandoned is not persuasive. The reasons petitioner's argument must necessarily fail are addressed below.

A review of the application file history reveals that an amendment was filed on January 7, 2009; a final Office action was mailed, responsively, on April 7, 2009. On September 17, 2009, an Interview Summary was entered into record memorializing an interview held on July 28, 2009, between the attorney of record and examiner Anyikire. The Interview Summary states, "[t]he examiner acknowledges that further consideration and a new search should be done with regards to claims 9 and 20." There is no further written communication between applicants and the USPTO until March 26, 2010, when the Notice of Abandonment was mailed. Petitioner states that:

> [o]n August 14, 2009, Applicants' Attorney called Examiner Anyikire to discuss the status of the Application and he states that he would conduct a new search with regards to Claims 9 and 20, and provide a new Office Action. Applicants' Attorney was not informed by the Examiner that any additional Application communication or submission would be required.

Excerpt taken from "Petition for Revival of an Application for Unavoidable Patent Application Abandonment under 37 CFR 1.137(a)", filed April 13, 2010, p. 1.

It is noted that 37 CFR 1.2 states that:

> All business with the Patent and Trademark Office should be transacted in writing. The personal attendance of applicants or their attorneys or argents at the Patent and Trademark Office is unnecessary. The action of the Patent and Trademark Office will be based exclusively on the written record in the Office. No attention will be paid to any alleged oral promise, stipulation, or understanding in relation to which there is disagreement or doubt.

The record does not corroborate petitioner's assertion that a new Office action was forthcoming and that there was no need to respond to the final Office action mailed April 7, 2009. Without a statement on the record by the examiner expressly indicating that a new Office action was forthcoming and/or a communication from the Director of the Technology Center vacating the

---

specific rule should be held to a higher standard than a pro se applicant who makes (or is forced to make) the decision to file the application without the assistance of counsel.

final Office action, petitioner's assertion that a new Office action was forthcoming and that there was no need to respond to the final Office action mailed April 7, 2009, is conjecture. Nothing in the record indicates that a response to the final Office action was not required. Accordingly, petitioner was required to file a proper response to the final Office action within the statutory period for reply set forth therein. A proper response was not received within the period allowed; therefore, the application was properly held abandoned on July 8, 2009. The instant petition is dismissed, accordingly.

Alternatively, petitioner may revive the application based on unintentional abandonment under 37 CFR 1.137(b) (enclosed). A grantable petition pursuant to 37 CFR 1.137(b) must be accompanied by the required reply, the required petition fee ($1,620.00 for a large entity and $810.00 for a verified small entity), and a statement that the **entire** delay in filing the required reply from the due date for the reply until the filing of a grantable petition pursuant to 37 CFR 1.137(b) was unintentional.

Further correspondence with respect to this matter should be addressed as follows:

By mail: Commissioner for Patents
United States Patent and Trademark Office
Box 1450
Alexandria, VA 22313-1450

By facsimile: (571) 273-8300
Attn: Office of Petitions

Telephone inquiries regarding this decision should be directed to the undersigned (571) 272-3222.

/Kenya A. McLaughlin/

Kenya A. McLaughlin
Petitions Attorney
Office of Petitions

UNITED STATES PATENT AND TRADEMARK OFFICE

Commissioner for Patents
United States Patent and Trademark Office
P.O. Box 1450
Alexandria, VA 22313-1450
www.uspto.gov

Kenneth J. LuKacher, Esq.
South Winton Court
Suite 204
3136 Winton Road South
Rochester NY 14623

MAILED
JAN 03 2011
OFFICE OF PETITIONS

In re Application of
Prokupets, et al.
Application No. 10/704,000
Filed: November 7, 2003
Attorney Docket No. LNL-004

DECISION ON PETITION

This is a decision on the petition under 37 CFR 1.137(b), filed November 22, 2010, to revive the above-identified application.

The petition is **GRANTED**.

The above-cited application became abandoned for failure to file a proper reply to the final Office action mailed April 7, 2009, which set a three (3) month shortened statutory period for reply. The application became abandoned on July 8, 2009. A Notice of Abandonment was mailed on March 26, 2010.

The Notice of Appeal, filed November 22, 2010, is noted as is the Pre-Appeal Brief Request for Review, filed November 22, 2010.

The application file is being forwarded to Technology Center 2600, GAU 2621 for further processing.

Telephone inquiries concerning this decision should be directed to the undersigned at (571) 272-3222.

/Kenya A. McLaughlin/

Kenya A. McLaughlin
Petitions Attorney
Office of Petitions

UNITED STATES PATENT AND TRADEMARK OFFICE

Commissioner for Patents
United States Patent and Trademark Office
P.O. Box 1450
Alexandria, VA 22313-1450
www.uspto.gov

MAILED

AUG 3 1 2010

OFFICE OF PETITIONS

FISH & RICHARDSON PC
P.O. BOX 1022
MINNEAPOLIS MN 55440-1022

In re Patent No. 7,279,560	: ON PETITION
Tamatani et al.	: UNDER 37 CFR 1.183
Issue Date: October 9, 2007	: and
Application No. 10/704,030	: ON APPLICATION FOR
Filed: November 7, 2003	: PATENT TERM ADJUSTMENT
Attorney Docket No. 14539-004008	:

This is a decision on the "Response to Decision on Petition Under 37 C.F.R. § 1.183 and on Application for Patent Term Adjustment Under 37 C.F.R. § 1.705(d)," filed August 27, 2009, requesting suspension of the time limit for consideration of an application for patent term adjustment ("PTA"). The response is properly treated as a request for reconsideration of petition under 37 CFR 1.183.

This petition is hereby **DENIED**. This decision is a final agency action within the meaning of 5 U.S.C. § 704 for purposes of seeking judicial review. *See,* MPEP 1002.02.

Your petition for recalculation/reconsideration of the USPTO's PTA determination for U.S. Patent No. 7,279,560 is dismissed as untimely. On February 1, 2010, the USPTO published a Federal Register notice that, *inter alia*, announced a limited waiver of the two-month deadline for filing a petition for reconsideration of a PTA determination under 37 CFR sec. 1.705(d). *See Interim Procedure for Patentees to Request a Recalculation of the Patent Term Adjustment to Comply with the Federal Circuit Decision in Wyeth v. Kappos Regarding Overlapping Delay Provisions of 35 U.S.C. sec. 154(b)(2)(A)*, 75 *Fed. Reg.* 5043 (Feb. 1, 2010) (notice).

Specifically, patent owners were permitted to request recalculation of a patent's PTA in view of the Federal Circuit decision Wyeth v. Kappos, 591 F.3d 1364 (Fed. Cir. 2010) up to 180 days after the grant of the patent. The USPTO determined not to accept <u>any</u> requests for PTA recalculation initially filed more than 180 days after patent grant, however, in view of the statutory judicial-review provisions of 35 U.S.C. sec. 154(b)(4), which require that any civil action to challenge the USPTO's PTA determination be brought within 180 days of patent grant. The USPTO believes that the statutory 180-day period for seeking court review of the USPTO's PTA determinations, particularly in view of the six-year statute of limitations that otherwise is applicable for actions under the Administrative Procedure Act, indicates a congressional intent

that PTA issues be resolved shortly after a patent issues. The USPTO does not consider it likely that Congress created a scheme under which the time period to seek initial USPTO review of a PTA determination extends beyond the time period provided for a dissatisfied patentee to seek judicial review of the USPTO's PTA determination. Thus, the USPTO believes that the 180-day period in 35 U.S.C. sec. 154(b)(4) represents the outer limit on the USPTO's ability to conclude its PTA determination.

The present renewed petition under 37 CFR 1.183 is granted to the extent that the decision of June 29, 2009 has been reconsidered; however, the renewed petition requesting suspension of the time limit for consideration of an application for patent term adjustment under 37 CFR 1.183 is **DENIED**.

The address on the petition differs from the correspondence address of record. A courtesy copy of this decision is being mailed to the address on the petition. However, until otherwise instructed, all future correspondence regarding this application file will be directed solely to the above-noted correspondence address of record.

Telephone inquiries specific to this matter should be directed to Charlema Grant, Attorney, Office of Petitions, at (571) 272-3215.

Anthony Knight
Director
Office of Petitions

Cc: Fish & Richardson, P.C.
601 Lexington Avenue-52nd Floor
New York, New York 10022-4611

UNITED STATES PATENT AND TRADEMARK OFFICE

Commissioner for Patents
United States Patent and Trademark Office
P.O. Box 1450
Alexandria, VA 22313-1450
www.uspto.gov

EDWARDS LIFESCIENCES CORPORATION
LEGAL DEPARTMENT
ONE EDWARDS WAY
IRVINE, CA 92614

MAILED
MAY 05 2011
OFFICE OF PETITIONS

In re Patent No. 7,112,219 :
Issue Date: September 26, 2006 :
Application No. 10/704,143 : NOTICE
Filed: November 10, 2003 :
Attorney Docket No. PVI-6153 :

This is a notice regarding your request for acceptance of a fee deficiency submission under 37 CFR 1.28. On September 1, 1998, the Court of Appeals for the Federal Circuit held that 37 CFR 1.28(c) is the sole provision governing the time for correction of the erroneous payment of the issue fee as a small entity. **See DH Technology v. Synergystex International, Inc. 154 F.3d 1333, 47 USPQ2d 1865 (Fed. Cir. Sept. 1, 1998).**

The Office no longer investigates or rejects original or reissue applications under 37 CFR 1.56. **1098 Off. Gaz. Pat. Office 502 (January 3, 1989)**. Therefore, nothing in this Notice is intended to imply that an investigation was done.

Your fee deficiency submission under 37 CFR 1.28 is hereby **ACCEPTED**.

This application is no longer entitled to small entity status. Accordingly, all future fees paid in this application must be paid at the large entity rate.

Inquiries related to this communication should be directed to the undersigned at (571) 272-1642.

/AMW/
April M. Wise
Petitions Examiner
Office of Petitions

UNITED STATES PATENT AND TRADEMARK OFFICE

Commissioner for Patents
United States Patent and Trademark Office
P.O. Box 1450
Alexandria, VA 22313-1450
www.uspto.gov

MAILED

SEP 23 2010

OFFICE OF PETITIONS

WESTERNGECO L.L.C.
KEVIN MCENANEY, IP DEPT
10001 RICHMOND AVENUE
HOUSTON, TX 77042-4299

In re Application of Simon H. Bittleston Application No. 10/704,182 Filed: November 7, 2003 Attorney Docket No.: 14.0088/DIV	: : : : :	ON PETITION

This is a decision on the petition under 37 CFR 1.137(b) to revive the above-identified application, filed July 22, 2010.

The petition is **GRANTED**.

The application became abandoned for failure to timely pay the issue and publication fees on or before July 6, 2010, as required by the Notice of Allowance and Fee(s) Due mailed April 5, 2010. On July 22, 2010, the present petition was filed. A Notice of Abandonment was subsequently mailed on July 30, 2009.

The petition satisfies the requirements of 37 CFR 1.137(b) in that petitioner has supplied (1) the reply in the form of the $1,510 issue fee and $300 publication fee; (2) the petition fee of $1.620; and (3) an adequate statement of unintentional delay.

The application is being referred to the Office of Data Management to be processed into a patent.

Telephone inquires related to this decision should be directed to the undersigned at (571) 272-3204. Telephone inquiries related to processing as a patent should be directed to (571) 272-4200.

Sherry D. Brinkley
Petitions Examiner
Office of Petitions

UNITED STATES PATENT AND TRADEMARK OFFICE

Commissioner for Patents
United States Patent and Trademark Office
P.O. Box 1450
Alexandria, VA 22313-1450
www.uspto.gov

KILPATRICK TOWNSEND & STOCKTON LLP
TWO EMBARCADERO CENTER
EIGHTH FLOOR
SAN FRANCISCO CA 94111-3834

MAILED
FEB 18 2011
OFFICE OF PETITIONS

In re Application of	:	
Indermuhle et al.	:	
Application No. 10/704199	:	ON PETITION
Filing or 371(c) Date: 11/07/2003	:	
Attorney Docket Number:	:	
020144-000811US	:	

This is a decision on the petition under the unintentional provisions of 37 CFR 1.137(b), filed November 22, 2010, to revive the above-identified application.

The petition is **GRANTED**.

The application became abandoned for failure to timely file a reply within the meaning of 37 CFR 1.113 to the final Office action of May 19, 2010. The proposed reply required for consideration of a petition to revive must be a Notice of Appeal (and appeal fee required by 37 CFR 41.20(b)(2), an amendment that *prima facie* places the application in condition for allowance, a Request for Continued Examination and submission (37 CFR 1.114), or the filing of a continuing application under 37 CFR 1.53(b). See MPEP 711.03(c)(III)(A)(2). Accordingly, the date of abandonment of this application is August 20, 2010.

The petition satisfies the requirements of 37 CFR 1.137(b) in that petitioner has supplied (1) the reply in the form of a Request for Continued Examination (RCE) and fee (and the submission required by 37 CFR 1.114); (2) the petition fee; and (3) a proper statement of unintentional delay.

Telephone inquiries concerning this decision should be directed to the undersigned at (571) 272-3232.

The application is being referred to Technology Center AU 1639 for processing of the RCE, and for appropriate action on the Amendment by the Examiner in the normal course of business.

/DLW/

Derek L. Woods
Attorney
Office of Petitions

Doc Code: PET.PTA.RCAL
Document Description: Request for Recalculation in view of Wyeth

PTO/SB/131 (02-10)
Approved for use through 07/31/2010. OMB 0651-0020
U.S. Patent and Trademark Office; U. S. DEPARTMENT OF COMMERCE
Under the Paperwork Reduction Act of 1995, no persons are required to respond to a collection of information unless it displays a valid OMB control number.

REQUEST FOR RECALCULATION OF PATENT TERM ADJUSTMENT IN VIEW OF *WYETH**

Attorney Docket Number: 4439-102894	
Application Number: 10/704,346	Filing Date (or 371(b) or (f) Date): November 7, 2003
Patent Number: 7,754,072	Issue Date: July 13, 2010
First Named Inventor: David R. Kelly	
Title: WATER FEATURE CONSTRUCTION	

PATENTEE HEREBY REQUESTS RECALCULATION OF THE PATENT TERM ADJUSTMENT (PTA) UNDER 35 USC 154(b) INDICATED ON THE ABOVE-IDENTIFIED PATENT. THE PATENTEE'S SOLE BASIS FOR REQUESTING THE RECALCULATION IS THE USPTO'S PRE-*WYETH* INTERPRETATION OF 35 U.S.C. 154(b)(2)(A).

Note: This form is only for requesting a recalculation of PTA for patents issued before March 2, 2010, if the sole basis for requesting the recalculation is the USPTO's pre-*Wyeth* interpretation of 35 U.S.C. 154(b)(2)(A). See Instruction Sheet on page 2 for more information.

Patentees are reminded that to preserve the right to review in the United States District Court for the District of Columbia of the USPTO's patent term adjustment determination, a patentee must ensure that he or she also takes the steps required under 35 U.S.C. 154(b)(3) and (b)(4) and 37 CFR 1.705 in a timely manner.

**Wyeth v. Kappos*, No. 2009-1120 (Fed. Cir., Jan. 7, 2010).

Signature	Date
Name (Print/Typed) James B. Conte	Registration Number 54,661

Note: *Signatures of all the inventors or assignees of record of the entire interest or their representative(s) are required in accordance with 37 CFR 1.33 and 11.18. Please see 37 CFR 1.4(d) for the form of the signature. If necessary, submit multiple forms for more than one signature, see below**.*

☒ *Total of 1 forms are submitted.

The information is required to obtain or retain a benefit by the public which is to file (and by the USPTO to process) an application. Confidentiality is governed by 35 U.S.C. 122 and 37 CFR 1.11 and 1.14. This collection is estimated to take 10 minutes to complete, including gathering, preparing, and submitting the completed application form to the USPTO. Time will vary depending upon the individual case. Any comments on the amount of time you require to complete this form and/or suggestions for reducing this burden, should be sent to the Chief Information Officer, U.S. Patent and Trademark Office, U.S. Department of Commerce, P.O. Box 1450, Alexandria, VA 22313-1450. DO NOT SEND FEES OR COMPLETED FORMS TO THIS ADDRESS. **SEND TO: Commissioner for Patents, P.O. Box 1450, Alexandria, VA 22313-1450.**

If you need assistance in completing the form, call 1-800-PTO-9199 and select option 2.

UNITED STATES PATENT AND TRADEMARK OFFICE

UNITED STATES DEPARTMENT OF COMMERCE
United States Patent and Trademark Office
Address: COMMISSIONER FOR PATENTS
P.O. Box 1450
Alexandria, Virginia 22313-1450
www.uspto.gov

Husch Blackwell Sanders, LLP
Husch Blackwell Sanders LLP Welsh & Katz
120 S RIVERSIDE PLAZA
22ND FLOOR
CHICAGO, IL 60606

Mail Date: 09/13/2010

Applicant	: David R. Kelly	: DECISION ON REQUEST FOR
Patent Number	: 7754072	: RECALCULATION of PATENT
Issue Date	: 07/13/2010	: TERM ADJUSTMENT IN VIEW
Application No	: 10/704,346	: OF WYETH
Filed	: 11/07/2003	:
		:

The Patentee's Request for Recalculation is **DISMISSED.**

This Request is deemed ineligible for consideration for one or more of the following reasons:

(A). The patent for which PTA recalculation is requested is either a design or reissue application or is a reexamination proceeding;

(B). The patent for which PTA recalculation is requested resulted from a utility or plant application filed under 35 USC 111(a) before May 29, 2000 and no CPA filed in the application on/after May 29, 2000;

(C). The patent for which PTA recalculation is requested resulted from an international application in which the international filing date was before May 29, 2000 and no CPA filed in the application on/after May 29, 2000;

(D). The patent for which PTA recalculation is requested issued on/after March 2, 2010;

(E). The Request for Recalculation was filed more than 180 days after the grant date of the patent and the request was not filed within two months of a dismissal of a request for reconsideration of the of the patent term under 37 CFR 1.705(d);

(F). The Request for Recalculation is not solely limited to USPTO pre-Wyeth interpretation of 35 U.S.C. 154(b)(2)(A);

or

(G). A civil action was filed pursuant to 35 U.S.C. 154(b)(4)(A)concerning the same patent at issue in this request.

Patentee may file a reply to this decision dismissing the Request for Recalculation. Patentee must file such reply within one month or thirty days, whichever is longer, of the mail date of the decision dismissing the Request for Recalculation. No fee is required if patentee is asserting in the reply that the dismissal for ineligibility is improper.

Patentee should use document code PET.OP if electronically filing a reply to this dismissal. If the USPTO finds that the request was improperly deemed ineligible, the USPTO will mail applicant a recalculation determination.

Patentee should be aware that in order to preserve the right to review in the United States District Court for the District of Columbia of the USPTO patent term adjustment determination, patentee must ensure that he or she also take the steps required under 35 U.S.C. 154(b)(4)(A). Nothing in the request for recalculation should be construed as providing an alternative time frame for commencing a civil action under 35 U.S.C. 154 (b)(4)(A).

Any questions concerning this decision should be directed to the Office of Patent Legal Administration at 571-272-7702.

UNITED STATES PATENT AND TRADEMARK OFFICE

Commissioner for Patents
United States Patent and Trademark Office
P.O. Box 1450
Alexandria, VA 22313-1450
www.uspto.gov

GOTTLIEB RACKMAN & REISMAN PC
270 MADISON AVENUE
8TH FLOOR
NEW YORK NY 10016-0601

MAILED

MAY 09 2011

OFFICE OF PETITIONS

In re Application of	:	
Kenneth Goeller, et al.	:	
Application No. 10/704,519	:	NOTICE
Filed: November 6, 2003	:	
Attorney Docket No. 4336-005	:	

This is a notice regarding your request for acceptance of a fee deficiency submission under 37 CFR 1.28.

The Office no longer investigates or rejects original or reissue patent under 37 CFR 1.56. **1098 Off. Gaz. Pat. Office 502 (January 3, 1989)**. Therefore, nothing in this Notice is intended to imply that an investigation was done.

Your fee deficiency submission under 37 CFR 1.28 is hereby **ACCEPTED**.

This patent is no longer entitled to small entity status. Accordingly, all future fees paid in this patent must be paid at the large entity rate.

Inquiries related to this communication should be directed to the undersigned at (571) 272-2991.

/Terri Johnson/
Terri Johnson
Petitions Examiner
Office of Petitions

UNITED STATES PATENT AND TRADEMARK OFFICE

UNITED STATES DEPARTMENT OF COMMERCE
United States Patent and Trademark Office
Address: COMMISSIONER FOR PATENTS
P.O. Box 1450
Alexandria, Virginia 22313-1450
www.uspto.gov

APPLICATION NO.	FILING DATE	FIRST NAMED INVENTOR	ATTORNEY DOCKET NO.	CONFIRMATION NO.
10/704,860	11/07/2003	Susan Clark King		4935

7590 01/26/2012

Susan Clark King
P.O. Box 485
Homedale, ID 83628

EXAMINER
HAND, MELANIE JO

ART UNIT	PAPER NUMBER
3761	

MAIL DATE	DELIVERY MODE
01/26/2012	PAPER

Please find below and/or attached an Office communication concerning this application or proceeding.

The time period for reply, if any, is set in the attached communication.

UNITED STATES PATENT AND TRADEMARK OFFICE

BEFORE THE
BOARD OF PATENT APPEALS AND INTERFERENCES

Ex parte SUSAN CLARK KING

Appeal 2011-001709
Application 10/704,860

Before DALE M. SHAW, Division 2 Support Administrator.

DECISION ON PETITION

This is a decision on the "Petition to the Commissioner to Make Special Due to Inventor's Age," filed January 11, 2012. ("Petition").

FINDINGS

1. On November 12, 2010, a Board of Patent Appeals and Interferences Docketing Notice was mailed and the Board took jurisdiction of the present application.

2. On January 11, 2012, Appellant filed the Petition requesting that the application be made special in view of Appellant's age.

3. Treating an application as special in view of the Applicant's age is authorized under 37 C.F.R. § 1.102(c)(1). To qualify for such treatment, Applicant must present any evidence showing that the Applicant is 65 years of age, or more, such as Applicant's statement, that he or she is 65 years of age or older. MPEP § 708.02, IV.

4. Applicant has provided the required statement setting forth that she is 65 years of age or more.

5. A petition under 37 C.F.R. § 1.102(c)(1) does not require the payment of any fee.

DISCUSSION

Appellant has met the criteria for making the present application special on the basis of her age.

DECISION

For the foregoing reasons, the Petition is GRANTED. The application is hereby made special.

DMS/bar

UNITED STATES PATENT AND TRADEMARK OFFICE

Commissioner for Patents
United States Patent and Trademark Office
P.O. Box 1450
Alexandria, VA 22313-1450
www.uspto.gov

Susan Clark King
P.O. Box 485
Homedale ID 83628

MAILED

FEB 13 2012

OFFICE OF PETITIONS

In re Application of	:	
Susan Clark King	:	
Application No. 10/704,860	:	DECISION ON PETITION
Filed: November 7, 2003	:	TO MAKE SPECIAL UNDER
Attorney Docket No.	:	37 CFR 1.102(c)(1)
	:	

This is a decision on the petition under 37 CFR 1.102(c)(1), filed January 11, 2012, to make the above-identified application special based on applicant's age as set forth in MPEP § 708.02, Section IV.

A review of the record discloses that a decision was mailed January 26, 2012, which **GRANTED** the petition based on age filed January 11, 2012. Therefore, the petition is **DISMISSED AS MOOT**.

Telephone inquiries concerning this decision should be directed to JoAnne Burke at 571-272-4584.

All other inquiries concerning either the examination or status of the application should be directed to the Technology Center.

/JoAnne Burke/
JoAnne Burke
Petitions Examiner
Office of Petitions

UNITED STATES PATENT AND TRADEMARK OFFICE

COMMISSIONER FOR PATENTS
UNITED STATES PATENT AND TRADEMARK OFFICE
P.O. BOX 1450
ALEXANDRIA, VA 22313-1450
www.uspto.gov

Paper No.

PHARMACIA & UPJOHN
7000 Portage Road
KZO-300-104
KALAMAZOO MI 49001

MAILED

OCT 01 2010

OFFICE OF PETITIONS

In re Application of	:	
Teagarden et al.	:	
Application No. 10/704,989	:	ON APPLICATION FOR
Filed: November 10, 2003	:	PATENT TERM ADJUSTMENT
Atty Docket No. PC26601	:	

This is in response to the APPLICATION FOR PATENT TERM ADJUSTMENT UNDER 37 C.F.R. § 1.705(b) filed March 8, 2010. Applicant submits that the correct patent term adjustment to be indicated on the patent is nine hundred eighteen (918) days, not three hundred ninety-seven (397) days as calculated by the Office as of the mailing of the initial determination of patent term adjustment. Applicant requests this correction on the basis that the Office will take in excess of three years to issue this patent.

As the instant application for patent term adjustment requests reconsideration of the patent term adjustment as it relates to the Office's failure to issue the patent within 3 years of the filing date, the application for patent term adjustment under 37 CFR 1.705(b) is **DISMISSED as PREMATURE**.

Knowledge of the actual date the patent issues is required to calculate the amount, if any, of additional patent term patentee is entitled to for Office failure to issue the patent within 3 years. See § 1.702(b). (This is true even where a request for continued examination (RCE) was filed). The computer will not undertake the § 1.702(b) calculation until the actual date of issuance of the patent has been determined. Likewise, the computer will not calculate any further Office delay under § 1.702(a)(4) or applicant delay under § 1.704(c)(10) until the actual date of issuance of the patent has been determined. As

such, the Office cannot make a determination on the correctness of the patent term adjustment until the patent has issued.

Requesting reconsideration of the patent term adjustment to be indicated on the patent under 37 CFR 1.705(b) based on the initial determination of patent term adjustment and a projected issuance date of the patent (or even the filing date of the request for continued examination) is premature. Accordingly, it is appropriate to dismiss as premature such a request.

Rather than file an application for patent term adjustment under 37 CFR 1.705(b) contesting the 37 CFR 1.702(b) calculation at the time of the mailing of the notice of allowance, applicant is advised that they may wait until the time of the issuance of the patent and file a request for reconsideration of the patent term adjustment pursuant to 37 CFR 1.705(d). As the USPTO does not calculate the amount of time earned pursuant to 37 CFR 1.702(b) until the time of the issuance of the patent, the Office will consider any request for reconsideration of the patent term adjustment due to an error in the calculation of 37 CFR 1.702(b) to be timely if the request for reconsideration is filed within two months of the issuance of the patent. However, as to all other bases for contesting the initial determination of patent term adjustment received with the notice of allowance, applicant must timely file an application for patent term adjustment prior to the payment of the issue fee[1].

The Office acknowledges submission of the $200.00 fee set forth in 37 CFR 1.18(e) for consideration of the application for patent term adjustment under 37 CFR 1.705(b).

Any request for reconsideration of the patent term adjustment indicated on the patent must be timely filed within 2 months

---

[1] For example, if applicant disputes both the calculation of patent term adjustment under 37 CFR 1.702(a)(1) for Office failure to mail a first Office action or notice of allowance not later than fourteen months after the date on which the application was filed and under 37 CFR 1.702(b) for Office failure to issue a patent within three years of the actual filing date of the application, then applicant must still timely file an application for patent term adjustment prior to the payment of the issue fee to contest the calculation of Office delay in issuing a first Office action or notice of allowance. See 37 CFR 1.705(b) and 35 U.S.C. 154(b)(3)(B). A dispute as to the calculation of the §1.702(a)(1) period raised on request for reconsideration of patent term adjustment under 37 CFR 1.705(d) will be dismissed as untimely filed.

after issuance pursuant to 37 CFR 1.705(d) and must include payment of the required fee under 37 CFR 1.18(e).

Telephone inquiries specific to this decision should be directed to the undersigned at (571) 272-3219.

Nancy Johnson
Senior Petitions Attorney
Office of Petitions

UNITED STATES PATENT AND TRADEMARK OFFICE

Commissioner for Patents
United States Patent and Trademark Office
P.O. Box 1450
Alexandria, VA 22313-1450
www.uspto.gov

Patent No. : **7732164**
Ser. No. **10/705195**
Inventor(s) : **BUTTCHER, VOLKER**
Issued : **06/08/2010**
Title : **METHOD FOR PRODUCING ALPHA-1, 6-BRANCHED ALPH-1, 4-GLUCANS FROM SUCROSE**
Docket No. : **0147-0253P**

Re: Request for Certificate of Correction

Consideration has been given your request for the issuance of a certificate of correction for the above-identified patent under the provisions of Rule(s) 1.322 and/or 1.323.

Assignees' names and addresses (assignment data) printed in a patent, are based *solely* on information supplied in the appropriate space for identifying the assignment data, i.e., item 3 of the Issue Fee Transmittal Form PTOL-85B. Granting of a request under 37 CFR 3.81(b) is required to correct applicant's error providing ***incorrect or erroneous*** assignment data, *before* issuance of a Certificate of Correction, under 37 CFR 1.323 *(see Manual of Patent Examining Procedures (M.P.E.P) Chp.1400, sect. 1481).* This procedure is required *at any time after the issue fee is paid*, including after issuance of the patent.

In view of the foregoing, your request, in this matter, is hereby denied.

A request to correct the Assignee under 37 CFR 3.81(b) should include:

A. **the processing fee set forth in 37 CFR 1. 17(i) (currently $130);**
B. a statement that the failure to include the correct assignee name on the PTOL-85B was inadvertent; and
C. a copy of the Notice of Recordation of Assignment Document, reflecting the reel and frame number where the assignment(s) is recorded and/or reflecting proof of *the date* the assignment was submitted for recordation.

In the Request, Applicant(s) may request that the file be forwarded to Certificates of Correction Branch, for issuance of a Certificate of Correction, if the Request is granted.

Any request under 37 CFR 3.81(b) should be directed to the following address or facsimile number:

By mail: Mail Stop PETITIONS
Commissioner for Patents
Post Office Box 1450
Alexandria, VA 22313-1450

By hand: Customer Service Window
Mail Stop Petitions
Randolph Building
401 Dulany Street
Alexandria, VA 22314

By fax: (703) 872-9306
ATTN: Office of Petitions

If a fee (currently $100) was previously submitted for consideration of a Request for Certificate of Correction, under CFR 1.323, to correct assignment data, no additional fee is required.

A Certificate of Correction will be issued for the remaining errors.

Omega Lewis
For Mary Diggs
Decisions & Certificates
of Correction Branch
(703)756-1575 or (703) 756-1814

LEONARD R. SVENSSON
BIRCH, STEWART, KOLASCH & BIRCH, LLP
12770 HIGH BLUFF DRIVE
SUITE 260
SAN DIEGO, CALIFORNIA 92130

OL

UNITED STATES PATENT AND TRADEMARK OFFICE

Commissioner for Patents
United States Patent and Trademark Office
P.O. Box 1450
Alexandria, VA 22313-1450
www.uspto.gov

BIRCH STEWART KOLASCH & BIRCH
PO BOX 747
FALLS CHURCH VA 22040-0747

MAILED
JUN 01 2011
OFFICE OF PETITIONS

Patent No. 7,732,164	:	
Issue Date: June 8, 2010	:	
Application No. 10/705,195	:	ON PETITION
Filed: November 10, 2003	:	
Attorney Docket No. 0147-0253P	:	

This is a decision on the petition filed April 27, 2011, a request under 37 CFR 3.81(b) to correct the name of the assignee on the front page of the above-identified patent by way of a Certificate of Correction.

The petition is **GRANTED.**

The patent file is being forwarded to the Certificates of Correction Branch for issuance of the requested Certificate of Correction.

The application file does not indicate a change of address has been filed in this case, although the address given on the petition differs from the address of record. A change of address should be filed in this case in accordance with MPEP 601.03. A courtesy copy of this decision is being mailed to the address noted on the petition. However, until otherwise instructed, all future correspondence regarding this application will be mailed solely to the address of record.

Telephone inquiries concerning this decision may be directed to the Kimberly Inabinet at (571) 272-4618. Inquiries regarding the issuance of a certificate of correction should be directed to the Certificate of Correction Branch at (703) 756-1814.

/Carl Friedman/
Carl Friedman
Petitions Examiner
Office of Petitions

cc: Leonard R. Svensson
Birch, Stewart, Kolasch & Birch, LLP
12770 High Bluff Drive
Suite 260
San Diego, CA 92130

UNITED STATES PATENT AND TRADEMARK OFFICE

Commissioner for Patents
United States Patent and Trademark Office
P.O. Box 1450
Alexandria, VA 22313-1450
www.uspto.gov

AVERY GOODMAN
4958 W COLONIAL CT.
GREENFIELD, WI 53220

MAILED

JAN 30 2012

OFFICE OF PETITIONS

In re Patent No. 7,004,659 :
Issue Date: February 28, 2006 :
Application No. 10/705,528 : ON PETITION
Filed: November 12, 2003 :
Patentees: Avery Goodman :

This is a decision on the petition under 37 CFR 1.378(c), filed on September 26, 2011, to accept the delayed payment of a maintenance fee for the above-identified patent.

Since petitioner has demonstrated to the satisfaction of the Commissioner that the delay in timely paying the maintenance fee was unintentional, the petition under 37 CFR 1.378(c) is hereby **GRANTED**.

The maintenance fee is hereby accepted and the above-identified patent is reinstated as of the mail date of this decision.

This patented file is being forwarded to Files Repository.

Telephone inquiries should be directed to the undersigned at (571) 272-3226.

/Andrea Smith/
Andrea Smith
Petitions Examiner
Office of Petitions

UNITED STATES PATENT AND TRADEMARK OFFICE

UNITED STATES DEPARTMENT OF COMMERCE
United States Patent and Trademark Office
Address: COMMISSIONER FOR PATENTS
P.O. Box 1450
Alexandria, Virginia 22313-1450
www.uspto.gov

APPLICATION NO.	FILING DATE	FIRST NAMED INVENTOR	ATTORNEY DOCKET NO.	CONFIRMATION NO.
10/705,544	11/10/2003	Kathrin Berkner	074451.P159	5145

8791 7590 11/09/2010
BLAKELY SOKOLOFF TAYLOR & ZAFMAN LLP
1279 OAKMEAD PARKWAY
SUNNYVALE, CA 94085-4040

EXAMINER
BAYAT, ALI

ART UNIT	PAPER NUMBER
2624	

MAIL DATE	DELIVERY MODE
11/09/2010	PAPER

Please find below and/or attached an Office communication concerning this application or proceeding.

The time period for reply, if any, is set in the attached communication.

UNITED STATES PATENT AND TRADEMARK OFFICE

Commissioner for Patents
United States Patent and Trademark Office
P.O. Box 1450
Alexandria, VA 22313-1450
www.uspto.gov

November 9, 2010

BLAKELY SOKOLOFF TAYLOR & ZAFMAN LLP
1279 OAKMEAD PARKWAY
SUNNYVALE CA 94085-4040

In re Application of	:	
Kathrin Berkner et al.	:	**DECISION ON PETITION**
Application No. 10705544	:	
Filed: 11/10/2003	:	
Attorney Docket No. 074451.P159	:	

This is a decision on the Petition to Accept Color Drawings under 37 C.F.R 1.84 (a) (2), received in the United States Patent and Trademark Office (USPTO) October 12, 2004.

The petition is **DISMISSED.**

A grantable petition under 37 C.F.R. 1.84(a) (2) must be accompanied by the following.

1. The fee set forth under 37 C.F.R. 1.17(h),
2. Three (3) sets of the color drawings in question, (One (1) set for EFS filings), and
3. The specification containing the following language as the first paragraph in that portion of the specification relating to the brief description of the drawings.

"The patent or application file contains at least one drawing executed in color. Copies of this patent or patent application publication with color drawing(s) will be provided by the Office upon request and payment of the necessary fee."

The petition did not meet the following requirement(s). 1 ☐ 2 ☑ 3 ☐

A renewed petition filed under 37 C.F.R. 1.84 (a) (2) must be filed within TWO (2) MONTHS of this decision. If a renewed petition is not filed within the TWO (2) Months of this decision the drawings will be printed in black and white.

Telephone inquires relating to this decision may be directed to the undersigned in the Office of Data Management at 571-272-4200.

/Donald Fairchild/
Office of Data Management
Publications Branch

UNITED STATES PATENT AND TRADEMARK OFFICE

UNITED STATES DEPARTMENT OF COMMERCE
United States Patent and Trademark Office
Address: COMMISSIONER FOR PATENTS
P.O. Box 1450
Alexandria, Virginia 22313-1450
www.uspto.gov

APPLICATION NO.	FILING DATE	FIRST NAMED INVENTOR	ATTORNEY DOCKET NO.	CONFIRMATION NO.
10/705,544	11/10/2003	Kathrin Berkner	074451.P159	5145

7590 01/12/2011
BLAKELY SOKOLOFF TAYLOR & ZAFMAN LLP
1279 OAKMEAD PARKWAY
SUNNYVALE, CA 94085-4040

EXAMINER
BAYAT, ALI

ART UNIT	PAPER NUMBER
2624	

MAIL DATE	DELIVERY MODE
01/12/2011	PAPER

ACKNOWLEDGEMENT OF REQUEST

Notice of Allowance/Allowability Mailed

The request to print a color drawing reference as the first paragraph in the portion of the specification containing a brief description of the drawings as required by 37 CFR 1.84 and MPEP § 608.02 has been received by the United States Patent and Trademark Office and will be entered into the specification.

571-272-4200 or 1-888-786-0101
Application Assistance Unit
Office of Data Management

FORM PTOM327-5 (Rev. 02/08)

UNITED STATES PATENT AND TRADEMARK OFFICE

Commissioner for Patents
United States Patent and Trademark Office
P.O. Box 1450
Alexandria, VA 22313-1450
www.uspto.gov

January 12, 2011

BLAKELY SOKOLOFF TAYLOR & ZAFMAN LLP
1279 OAKMEAD PARKWAY
SUNNYVALE CA 94085-4040

In re Application of	:	
Kathrin Berkner et al.	:	**DECISION ON PETITION**
Application No. 10705544	:	
Filed: 11/10/2003	:	***ACCEPTANCE OF COLOR***
Attorney Docket No. 074451.P159	:	***DRAWINGS***

This is a decision on the Petition to Accept Color Drawings under 37 C.F.R 1.84 (a) (2), received in the United States Patent and Trademark Office (USPTO) January 4, 2011.

The petition is **GRANTED**.

A grantable petition under 37 C.F.R. 1.84(a) (2) must be accompanied by the following.

1. The fee set forth under 37 C.F.R. 1.17(h),
2. Three (3) sets of the color drawings in question, or (1) set if filed via EFS, and
3. The specification contains appropriate language referring to the color drawings as the first paragraph in that portion of the specification relating to the brief description of the drawings.

The petition was accompanied by all of the required fees and drawings. The specification contains the appropriate language. Therefore, the petition is GRANTED.

Telephone inquires relating to this decision may be directed to the undersigned in the Office of Data Management at 571-272-4200.

/Don Fairchild/
Office of Data Management
Publications Branch

PTO/SB/66 (03-09)
Approved for use through 03/31/2012. OMB 0651-0016
U.S. Patent and Trademark Office: U.S. DEPARTMENT OF COMMERCE
Under the Paperwork Reduction Act of 1995, no persons are required to respond to a collection of information unless it displays valid OMB control number.

PETITION TO ACCEPT UNINTENTIONALLY DELAYED PAYMENT OF MAINTENANCE FEE IN AN EXPIRED PATENT (37 CFR 1.378(c))

Patent Number	Issue Date (YYYY-MM-DD)	Application Number	Filing Date (YYYY-MM-DD)	Docket Number (if applicable)
7124142	2006-10-17	10705679	2003-11-10	2966-031367

CAUTION: Maintenance fee (and surcharge, if any) payment must correctly identify: (1) the patent number and (2) the application number of the actual U.S. application leading to issuance of that patent to ensure the fee(s) is/are associated with the correct patent. 37 CFR 1.366(c) and (d).

SMALL ENTITY
☒ Patentee claims, or has previously claimed, small entity status. See 37 CFR 1.27.

LOSS OF ENTITLEMENT TO SMALL ENTITY STATUS
☐ Patentee is no longer entitled to small entity status. See 37 CFR 1.27(g)

NOT Small Entity		Small Entity	
Fee	Code	Fee	Code
○ 3 ½ year	(1551)	◉ 3 ½ year	(2551)
○ 7 ½ year	(1552)	○ 7 ½ year	(2552)
○ 11 ½ year	(1553)	○ 11 ½ year	(2553)

SURCHARGE
The surcharge required by 37 CFR 1.20(i)(2) (Fee Code 1558) must be paid as a condition of accepting unintentionally delayed payment of the maintenance fee.

MAINTENANCE FEE (37 CFR 1.20(e)-(g))
The appropriate maintenance fee must be submitted with this petition.

STATEMENT
THE UNDERSIGNED CERTIFIES THAT THE DELAY IN PAYMENT OF THE MAINTENANCE FEE TO THIS PATENT WAS UNINTENTIONAL

PETITIONER(S) REQUEST THAT THE DELAYED PAYMENT OF THE MAINTENANCE FEE BE ACCEPTED AND THE PATENT REINSTATED

THIS PORTION MUST BE COMPLETED BY THE SIGNATORY OR SIGNATORIES

37 CFR 1.378(d) states: "Any petition under this section must be signed by an attorney or agent registered to practice before the Patent and Trademark Office, or by the patentee, the assignee, or other party in interest."

I certify, in accordance with 37 CFR 1.4(d)(4) that I am

◉ An attorney or agent registered to practice before the Patent and Trademark Office

○ A sole patentee

○ A joint patentee; I certify that I am authorized to sign this submission on behalf of all the other patentees.

○ A joint patentee; all of whom are signing this e-petition

○ The assignee of record of the entire interest

Under the Paperwork Reduction Act of 1995, no persons are required to respond to a collection of information unless it displays valid OMB control number.

Patent Practitioner			
A signature of the applicant or representative is required in accordance with 37 CFR 1.33 and 10.18. Please see 37 CFR 1.4(d) for the form of the signature			
Signature	/Kent F. Baldauf, Jr./	Date (YYYY-MM-DD)	2011-03-16
Name	Kent F. Baldauf, Jr.	Registration Number	36082

This collection of information is required by 37 CFR 1.378(c). The information is required to obtain or retain a benefit by the public which is to file (and by the USPTO to process) an application. Confidentiality is governed by 35 U.S.C. 122 and 37 CFR 1.11 and 1.14. This collection is estimated to take 1 hour to complete, including gathering, preparing, and submitting the completed application form to the USPTO. Time will vary depending upon the individual case. Any comments on the amount of time you require to complete this form and/ or suggestions for reducing this burden, should be sent to the Chief Information Officer, U.S. Patent and Trademark Office, U.S. Department of Commerce, P.O. Box 1450, Alexandria, VA 22313-1450. DO NOT SEND FEES OR COMPLETED FORMS TO THIS ADDRESS. **This form can only be used when in conjunction with EFS-Web. If this form is mailed to the USPTO, it may cause delays in reinstating the patent.**

Privacy Act Statement

The Privacy Act of 1974 (P.L. 93-579) requires that you be given certain information in connection with your submission of the attached form related to a patent application or patent. Accordingly, pursuant to the requirements of the Act, please be advised that: (1) the general authority for the collection of this information is 35 U.S.C. 2(b)(2); (2) furnishing of the information solicited is voluntary; and (3) the principal purpose for which the information is used by the U.S. Patent and Trademark Office is to process and/or examine your submission related to a patent application or patent. If you do not furnish the requested information, the U.S. Patent and Trademark Office may not be able to process and/or examine your submission, which may result in termination of proceedings or abandonment of the application or expiration of the patent.

The information provided by you in this form will be subject to the following routine uses:

1. The information on this form will be treated confidentially to the extent allowed under the Freedom of Information Act (5 U.S.C. 552) and the Privacy Act (5 U.S.C. 552a). Records from this system of records may be disclosed to the Department of Justice to determine whether the Freedom of Information Act requires disclosure of these records.

2. A record from this system of records may be disclosed, as a routine use, in the course of presenting evidence to a court, magistrate, or administrative tribunal, including disclosures to opposing counsel in the course of settlement negotiations.

3. A record in this system of records may be disclosed, as a routine use, to a Member of Congress submitting a request involving an individual, to whom the record pertains, when the individual has requested assistance from the Member with respect to the subject matter of the record.

4. A record in this system of records may be disclosed, as a routine use, to a contractor of the Agency having need for the information in order to perform a contract. Recipients of information shall be required to comply with the requirements of the Privacy Act of 1974, as amended, pursuant to 5 U.S.C. 552a(m).

5. A record related to an International Application filed under the Patent Cooperation Treaty in this system of records may be disclosed, as a routine use, to the International Bureau of the World Intellectual Property Organization, pursuant to the Patent Cooperation Treaty.

6. A record in this system of records may be disclosed, as a routine use, to another federal agency for purposes of National Security review (35 U.S.C. 181) and for review pursuant to the Atomic Energy Act (42 U.S.C. 218(c)).

7. A record from this system of records may be disclosed, as a routine use, to the Administrator, General Services, or his/her designee, during an inspection of records conducted by GSA as part of that agency's responsibility to recommend improvements in records management practices and programs, under authority of 44 U.S.C. 2904 and 2906. Such disclosure shall be made in accordance with the GSA regulations governing inspection of records for this purpose, and any other relevant (i.e., GSA or Commerce) directive. Such disclosure shall not be used to make determinations about individuals.

8. A record from this system of records may be disclosed, as a routine use, to the public after either publication of the application pursuant to 35 U.S.C. 122(b) or issuance of a patent pursuant to 35 U.S.C. 151. Further, a record may be disclosed, subject to the limitations of 37 CFR 1.14, as a routine use, to the public if the record was filed in an application which became abandoned or in which the proceedings were terminated and which application is referenced by either a published application, an application open to public inspections or an issued patent.

9. A record from this system of records may be disclosed, as a routine use, to a Federal, State, or local law enforcement agency, if the USPTO becomes aware of a violation or potential violation of law or regulation.

UNITED STATES PATENT AND TRADEMARK OFFICE

Commissioner for Patents
United States Patent and Trademark Office
P.O. Box 1450
Alexandria, VA 22313-1450
www.uspto.gov

In re Patent No. 7124142
Issue Date: October 17,2006
Application No. 10705679
Filed: November 10,2003
Attorney Docket No. 2966-031367

:
:DECISION GRANTING PETITION
:UNDER 37 CFR 1.378(c)
:

This is a decision on the electronic petition, filed March 16,2011 ,under 37 CFR 1.378(c) to accept the unintentionally delayed payment of the 3.5 year maintenance fee for the above-identified patent.

The petition is **GRANTED**.

The maintenance fee is accepted, and the above-identified patent reinstated as of March 16,2011 .
This decision also constitutes notice that the fee has been accepted. An electronic copy of the petition and this decision has been created as an entry in the Image File Wrapper. Nevertheless, petitioner should print and retain an independent copy.

Telephone inquiries related to this electronic decision should be directed to the Electronic Business Center at 1-866-217-9197.

UNITED STATES PATENT AND TRADEMARK OFFICE

Commissioner for Patents
United States Patent and Trademark Office
P.O. Box 1450
Alexandria, VA 22313-1450
www.uspto.gov

In re Patent No. 7278957
Issue Date: October 9,2007
Application No. 10705993
Filed: November 12,2003
Attorney Docket No. 01126_1001

:
:DECISION GRANTING PETITION
:UNDER 37 CFR 1.378(c)
:

This is a decision on the electronic petition, filed March 6,2012 ,under 37 CFR 1.378(c) to accept the unintentionally delayed payment of the 3.5 year maintenance fee for the above-identified patent.

The petition is **GRANTED**.

The maintenance fee is accepted, and the above-identified patent reinstated as of March 6,2012 .
This decision also constitutes notice that the fee has been accepted. An electronic copy of the petition and this decision has been created as an entry in the Image File Wrapper. Nevertheless, petitioner should print and retain an independent copy.

Telephone inquiries related to this electronic decision should be directed to the Electronic Business Center at 1-866-217-9197.

PTO/SB/66 (03-09)
Approved for use through 03/31/2012. OMB 0651-0016
U.S. Patent and Trademark Office: U.S. DEPARTMENT OF COMMERCE
Under the Paperwork Reduction Act of 1995, no persons are required to respond to a collection of information unless it displays valid OMB control number.

PETITION TO ACCEPT UNINTENTIONALLY DELAYED PAYMENT OF MAINTENANCE FEE IN AN EXPIRED PATENT (37 CFR 1.378(c))

Patent Number	Issue Date (YYYY-MM-DD)	Application Number	Filing Date (YYYY-MM-DD)	Docket Number (if applicable)
7278957	2007-10-09	10705993	2003-11-12	

CAUTION: Maintenance fee (and surcharge, if any) payment must correctly identify: (1) the patent number and (2) the application number of the actual U.S. application leading to issuance of that patent to ensure the fee(s) is/are associated with the correct patent. 37 CFR 1.366(c) and (d).

SMALL ENTITY
☒ Patentee claims, or has previously claimed, small entity status. See 37 CFR 1.27.

LOSS OF ENTITLEMENT TO SMALL ENTITY STATUS
☐ Patentee is no longer entitled to small entity status. See 37 CFR 1.27(g)

NOT Small Entity		Small Entity	
Fee	Code	Fee	Code
○ 3 ½ year	(1551)	● 3 ½ year	(2551)
○ 7 ½ year	(1552)	○ 7 ½ year	(2552)
○ 11 ½ year	(1553)	○ 11 ½ year	(2553)

SURCHARGE
The surcharge required by 37 CFR 1.20(i)(2) (Fee Code 1558) must be paid as a condition of accepting unintentionally delayed payment of the maintenance fee.

MAINTENANCE FEE (37 CFR 1.20(e)-(g))
The appropriate maintenance fee must be submitted with this petition.

STATEMENT
THE UNDERSIGNED CERTIFIES THAT THE DELAY IN PAYMENT OF THE MAINTENANCE FEE TO THIS PATENT WAS UNINTENTIONAL

PETITIONER(S) REQUEST THAT THE DELAYED PAYMENT OF THE MAINTENANCE FEE BE ACCEPTED AND THE PATENT REINSTATED

THIS PORTION MUST BE COMPLETED BY THE SIGNATORY OR SIGNATORIES

37 CFR 1.378(d) states: "Any petition under this section must be signed by an attorney or agent registered to practice before the Patent and Trademark Office, or by the patentee, the assignee, or other party in interest."

I certify, in accordance with 37 CFR 1.4(d)(4) that I am

- ● An attorney or agent registered to practice before the Patent and Trademark Office
- ○ A sole patentee
- ○ A joint patentee; I certify that I am authorized to sign this submission on behalf of all the other patentees.
- ○ A joint patentee; all of whom are signing this e-petition
- ○ The assignee of record of the entire interest

Under the Paperwork Reduction Act of 1995, no persons are required to respond to a collection of information unless it displays valid OMB control number.

Patent Practitioner			
A signature of the applicant or representative is required in accordance with 37 CFR 1.33 and 10.18. Please see 37 CFR 1.4(d) for the form of the signature			
Signature	/sangwon kim/	Date (YYYY-MM-DD)	2012-02-26
Name	Sangwon Kim	Registration Number	54221

This collection of information is required by 37 CFR 1.378(c). The information is required to obtain or retain a benefit by the public which is to file (and by the USPTO to process) an application. Confidentiality is governed by 35 U.S.C. 122 and 37 CFR 1.11 and 1.14. This collection is estimated to take 1 hour to complete, including gathering, preparing, and submitting the completed application form to the USPTO. Time will vary depending upon the individual case. Any comments on the amount of time you require to complete this form and/ or suggestions for reducing this burden, should be sent to the Chief Information Officer, U.S. Patent and Trademark Office, U.S. Department of Commerce, P.O. Box 1450, Alexandria, VA 22313-1450. DO NOT SEND FEES OR COMPLETED FORMS TO THIS ADDRESS. **This form can only be used when in conjunction with EFS-Web. If this form is mailed to the USPTO, it may cause delays in reinstating the patent.**

Privacy Act Statement

The Privacy Act of 1974 (P.L. 93-579) requires that you be given certain information in connection with your submission of the attached form related to a patent application or patent. Accordingly, pursuant to the requirements of the Act, please be advised that: (1) the general authority for the collection of this information is 35 U.S.C. 2(b)(2); (2) furnishing of the information solicited is voluntary; and (3) the principal purpose for which the information is used by the U.S. Patent and Trademark Office is to process and/or examine your submission related to a patent application or patent. If you do not furnish the requested information, the U.S. Patent and Trademark Office may not be able to process and/or examine your submission, which may result in termination of proceedings or abandonment of the application or expiration of the patent.

The information provided by you in this form will be subject to the following routine uses:

1. The information on this form will be treated confidentially to the extent allowed under the Freedom of Information Act (5 U.S.C. 552) and the Privacy Act (5 U.S.C. 552a). Records from this system of records may be disclosed to the Department of Justice to determine whether the Freedom of Information Act requires disclosure of these records.

2. A record from this system of records may be disclosed, as a routine use, in the course of presenting evidence to a court, magistrate, or administrative tribunal, including disclosures to opposing counsel in the course of settlement negotiations.

3. A record in this system of records may be disclosed, as a routine use, to a Member of Congress submitting a request involving an individual, to whom the record pertains, when the individual has requested assistance from the Member with respect to the subject matter of the record.

4. A record in this system of records may be disclosed, as a routine use, to a contractor of the Agency having need for the information in order to perform a contract. Recipients of information shall be required to comply with the requirements of the Privacy Act of 1974, as amended, pursuant to 5 U.S.C. 552a(m).

5. A record related to an International Application filed under the Patent Cooperation Treaty in this system of records may be disclosed, as a routine use, to the International Bureau of the World Intellectual Property Organization, pursuant to the Patent Cooperation Treaty.

6. A record in this system of records may be disclosed, as a routine use, to another federal agency for purposes of National Security review (35 U.S.C. 181) and for review pursuant to the Atomic Energy Act (42 U.S.C. 218(c)).

7. A record from this system of records may be disclosed, as a routine use, to the Administrator, General Services, or his/her designee, during an inspection of records conducted by GSA as part of that agency's responsibility to recommend improvements in records management practices and programs, under authority of 44 U.S.C. 2904 and 2906. Such disclosure shall be made in accordance with the GSA regulations governing inspection of records for this purpose, and any other relevant (i.e., GSA or Commerce) directive. Such disclosure shall not be used to make determinations about individuals.

8. A record from this system of records may be disclosed, as a routine use, to the public after either publication of the application pursuant to 35 U.S.C. 122(b) or issuance of a patent pursuant to 35 U.S.C. 151. Further, a record may be disclosed, subject to the limitations of 37 CFR 1.14, as a routine use, to the public if the record was filed in an application which became abandoned or in which the proceedings were terminated and which application is referenced by either a published application, an application open to public inspections or an issued patent.

9. A record from this system of records may be disclosed, as a routine use, to a Federal, State, or local law enforcement agency, if the USPTO becomes aware of a violation or potential violation of law or regulation.

UNITED STATES PATENT AND TRADEMARK OFFICE

Commissioner for Patents
United States Patent and Trademark Office
P.O. Box 1450
Alexandria, VA 22313-1450
www.uspto.gov

COLESANTI & ASSOCIATES LLC
P.O. BOX 954
BRISTOL RI 02809

MAILED

SEP 07 2010

OFFICE OF PETITIONS

Patent No. 6,948,556	:	
Application No. 10/706,017	:	
Filed: November 12, 2003	:	ON PETITION
Issued: September 27, 2005	:	
Attorney Docket No. D1431-0002	:	

This is a decision on the petition under 37 CFR 1.378(c), filed August 5, 2010, to accept the unintentionally delayed payment of a maintenance fee for the above-identified patent.

The petition is **GRANTED**.

The patent issued September 27, 2005. The last day of the grace period for paying the 3.5-year maintenance fee was September 27, 2009. Therefore, since this petition was filed within twenty-four months after the six-month grace period provided in 37 CFR 1.362(e), this petition was timely filed under the provisions of 37 CFR 1.378(c).

The maintenance fee is hereby accepted and the above-identified patent is reinstated as of the mail date of this decision.

It is not apparent whether the statement of unintentional delay was signed by a person who would have been in a position of knowing that the delay in filing a timely response was unintentional. Nevertheless, in accordance with 37 CFR 10.18, the statement is accepted as constituting a certification of unintentional delay. However, in the event that petitioner has no knowledge that the delay in paying the maintenance fee was in fact unintentional, petitioner must make such an inquiry to ascertain that, in fact, the delay was unintentional. If petitioner discovers that the delay in paying the maintenance fee was intentional, petitioner must so notify the Office. Also, it is not apparent whether the person signing the instant petition was ever given a power of attorney or authorization of agent to prosecute this patent. In accordance with 37 CFR 1.34(a), the signature appearing on the petition shall constitute a representation to the United States Patent and Trademark Office that he/she is authorized to represent the particular party in whose behalf he/she acts. While a courtesy copy of this decision is being mailed to the person signing the instant petition, all future correspondence will be directed solely to the address currently of record until such time as appropriate instructions are received to the contrary.

Petitioner should note that submission of a power of attorney and/or a change of correspondence address would not affect the fee address. Therefore, if petitioner desires to receive future correspondence, which **may** be mailed regarding maintenance fees for the above-identified patent, the "fee address" and/or "customer number" forms should be submitted to the Maintenance Fee Division.

Telephone inquiries concerning this decision should be directed to the undersigned at (571) 272-3206.

Liana Walsh
Petitions Examiner
Office of Petitions

cc: MARTIN FRUITMAN
25821 PARADA DRIVE
VALENCIA, CA 91355

UNITED STATES PATENT AND TRADEMARK OFFICE

Commissioner for Patents
United States Patent and Trademark Office
P.O. Box 1450
Alexandria, VA 22313-1450
www.uspto.gov

MAILED

OCT 31 2011

OFFICE OF PETITIONS

CHRISTIE PARKER & HALE, LLP
P.O. BOX 7068
PASADENA, CA 91109-7068

In re Application of	:	
Wilton W. Webster, Jr. et al	:	
Application No. 10/706,024	:	DECISION GRANTING PETITION
Filed: November 12, 2003	:	UNDER 37 CFR 1.313(c)(2)
Attorney Docket No. 51216/W112	:	

This is a decision on the petition under 37 CFR 1.313(c)(2), filed, October 27, 2011 to withdraw the above-identified application from issue after payment of the issue fee.

The petition is **GRANTED**.

The above-identified application is withdrawn from issue for consideration of a submission under 37 CFR 1.114 (request for continued examination). *See* 37 CFR 1.313(c)(2).

Petitioner is advised that the issue fee paid on October 20, 2011 in the above-identified application cannot be refunded. If, however, the above-identified application is again allowed, petitioner may request that it be applied towards the issue fee required by the new Notice of Allowance.[1]

Telephone inquiries should be directed to Irvin Dingle at (571) 272-3210.

This matter is being referred to Technology Center AU 3729 for processing of the request for continued examination under 37 CFR 1.114 and for consideration of the concurrently filed Information Disclosure Statement.

/Irvin Dingle/
Irvin Dingle
Petitions Examiner
Office of Petitions

[1] The request to apply the issue fee to the new Notice may be satisfied by completing and returning the new Issue Fee Transmittal Form PTOL-85(b), which includes the following language thereon: Commissioner for Patents is requested to apply the Issue Fee and Publication Fee (if any) or re-apply any previously paid issue fee to the application identified above. Petitioner is advised that, whether a fee is indicated as being due or not, the Issue Fee Transmittal Form **must** be completed and timely submitted to avoid abandonment. Note the language in bold text on the first page of the Notice of Allowance and Fee(s) Due (PTOL-85).

UNITED STATES PATENT AND TRADEMARK OFFICE

Commissioner for Patents
United States Patent and Trademark Office
P.O. Box1450
Alexandria, VA 22313-1450
www.uspto.gov

KILPATRICK TOWNSEND & STOCKTON LLP
TWO EMBARCADERO CENTER
EIGHTH FLOOR
SAN FRANCISCO, CA 94111-3834

In re Patent No. 7,220,755
Issue Date: May 22, 2007
Appl. No: 10/706,055
Filed: November 12, 2003
For: Correction of Inventorship

This is a decision on the petition filed May 19, 2010, to correct inventorship under 37 CFR 1.324.

The petition is **GRANTED**.

The patented filed is being forwarded to Certificate of Corrections Branch for issuance of a certificate naming only the actual inventor or inventors.

/Andrew D. Kosar/

Andrew D. Kosar
Supervisory Patent Examiner Art Unit 1622
Technology Center 1600

UNITED STATES PATENT AND TRADEMARK OFFICE

Commissioner for Patents
United States Patent and Trademark Office
P.O. Box 1450
Alexandria, VA 22313-1450
www.uspto.gov

Blank Rome, LLP
Watergate
600 New Hampshire Avenue, N.W.
Washington, DC 20037

MAILED

NOV 15 2010

OFFICE OF PETITIONS

In re Application of	:	
Nathan Ravi	:	
Application No. 10/706,081	:	DECISION ON PETITION
Filed: November 13, 2003	:	TO WITHDRAW
Attorney Docket No. 111828.0110	:	FROM RECORD
	:	

This is a decision on the Request to Withdraw as attorney or agent of record under 37 C.F.R. § 1.36(b), filed August 26, 2010.

The request is **moot because a revocation of power of attorney has been filed**.

A review of the file record indicates that the power of attorney to Minh-Quan K/ Pham and all attorneys/agents of record have been revoked by the assignee of the patent application on October 13, 2010. Accordingly, the request to withdraw under 37 C.F.R. § 1.36(b) is moot.

All future communications from the Office will continue to be directed to the below-listed address until otherwise notified by applicant.

Telephone inquires concerning this decision should be directed to Kimberly Inabinet at 571-272-4618.

/Kimberly Inabinet/

Kimberly Inabinet
Petitions Examiner
Office of Petitions

cc: Gorman Law Offices
315 Madison Avenue
Suite 901
New York, NY 10017

UNITED STATES PATENT AND TRADEMARK OFFICE

UNITED STATES DEPARTMENT OF COMMERCE
United States Patent and Trademark Office
Address: COMMISSIONER FOR PATENTS
P.O. Box 1450
Alexandria, Virginia 22313-1450
www.uspto.gov

APPLICATION NUMBER	FILING OR 371(C) DATE	FIRST NAMED APPLICANT	ATTY. DOCKET NO./TITLE
10/706,081	11/13/2003	Nathan Ravi	111828-00110

CONFIRMATION NO. 7277

POWER OF ATTORNEY NOTICE

27557
BLANK ROME LLP
WATERGATE
600 NEW HAMPSHIRE AVENUE, N.W.
WASHINGTON, DC 20037

OC000000044478419

Date Mailed: 11/12/2010

NOTICE REGARDING CHANGE OF POWER OF ATTORNEY

This is in response to the Power of Attorney filed 10/13/2010.

- The Power of Attorney to you in this application has been revoked by the assignee who has intervened as provided by 37 CFR 3.71. Future correspondence will be mailed to the new address of record(37 CFR 1.33).

/kainabinet/

Office of Data Management, Application Assistance Unit (571) 272-4000, or (571) 272-4200, or 1-888-786-0101

UNITED STATES PATENT AND TRADEMARK OFFICE

Commissioner for Patents
United States Patent and Trademark Office
P.O. Box 1450
Alexandria, VA 22313-1450
www.uspto.gov

GOODWIN PROCTER LLP
PATENT ADMINISTRATOR
53 STATE STREET
EXCHANGE PLACE
BOSTON MA 02109-2881

MAILED
AUG 17 2010
OFFICE OF PETITIONS

In re Application of	:	
Fein	:	
Application No. 10/706,100	:	ON APPLICATION FOR
Filed: November 12, 2003	:	PATENT TERM ADJUSTMENT
Atty Docket No. SER-001	:	

This is in response to the APPLICATION FOR PATENT TERM ADJUSTMENT UNDER 35 U.S.C. § 154(b) AND 37 C.F.R. § 1.705(b), filed May 20, 2010. Applicant requests that the patent term adjustment at the time of the mailing of the Notice of Allowance be corrected from two hundred thirty-seven (237) days to five hundred thirty-nine (539) days.

Applicant requests recalculation of the determination of patent term adjustment partly on the basis that the Office will take in excess of three years to issue this patent. In addition to the over three year argument, applicant sets forth two additional bases for correction of the patent term adjustment. First, applicant argues that, pursuant to 37 CFR 1.702(a)(2), a period of adjustment of 30 days should be entered in connection with the Office's mailing of a non-final Office action on October 16, 2007 in response to applicant's May 16, 2007 reply. Second, applicant asserts that the Office improperly entered a 87 day period of reduction pursuant to 37 CFR 1.704(c)(8) in connection with the filing of an Information Disclosure Statement on February 4, 2010, after applicant filed an appeal brief on November 9, 2009.

To the extent that applicant requests reconsideration of the patent term adjustment as it relates to the Office's failure to issue the patent within 3 years of the filing date, the application for patent term adjustment under 37 CFR 1.705(b) is **DISMISSED as PREMATURE**.

Knowledge of the actual date the patent issues is required to calculate the amount, if any, of additional patent term patentee is entitled to for Office failure to issue the patent within 3 years. See § 1.702(b). This is true even in this instance where a request for continued examination (RCE) was filed. The computer will not undertake the § 1.702(b) calculation until the actual date of issuance of the patent has been determined. Likewise, the computer will not calculate any further Office delay under § 1.702(a)(4) or applicant delay under § 1.704(c)(10) until the actual date of issuance of the patent has been determined. As such, the Office cannot make a determination on the correctness of the patent term adjustment until the patent has issued. Requesting reconsideration of the patent term adjustment to be indicated on the patent under 37 CFR 1.705(b) based on the initial determination of patent term adjustment and a projected issuance date of the patent or even the filing date of the request for continued examination is premature. Accordingly, it is appropriate to dismiss as premature such a request.

Rather than file an application for patent term adjustment under 37 CFR 1.705(b) contesting the 37 CFR 1.702(b) calculation at the time of the mailing of the notice of allowance, applicant is advised that he may wait until the time of the issuance of the patent and file a request for reconsideration of the patent term adjustment pursuant to 37 CFR 1.705(d). As the USPTO does not calculate the amount of time earned pursuant to 37 CFR 1.702(b) until the time of the issuance of the patent, the Office will consider any request for reconsideration of the patent term adjustment due to an error in the calculation of 37 CFR 1.702(b) to be timely if the request for reconsideration is filed within two months of the issuance of the patent. However, as to all other bases for contesting the initial determination of patent term adjustment received with the notice of allowance, applicant must timely file an application for patent term adjustment prior to the payment of the issue fee[1].

---

[1] For example, if applicant disputes both the calculation of patent term adjustment under 37 CFR 1.702(a)(1) for Office failure to mail a first Office action or notice of allowance not later than fourteen months after the date on which the application was filed and under 37 CFR 1.702(b) for Office failure to issue a patent within three years of the actual filing date of the application, then applicant must still timely file an application for patent term adjustment prior to the payment of the issue fee to contest the calculation of Office delay in issuing a first Office action or notice of allowance. See 37 CFR 1.705(b) and 35 U.S.C. 154(b)(3)(B). A dispute as to the calculation of the §1.702(a)(1) period raised on request for reconsideration of patent term adjustment under 37 CFR 1.705(d) will be dismissed as untimely filed.

To the extent that applicant otherwise requests correction of the initial determination of patent term adjustment (PTA), the application for patent term adjustment is **GRANTED to the extent indicated herein.**

The Office has updated the PALM screen to reflect that the correct Patent Term Adjustment determination at the time of the mailing of the Notice of Allowance is **three hundred twenty-four (324) days.** A copy of the updated PALM screen, showing the determination, is enclosed.

On February 23, 2010, the Office mailed the Determination of Patent Term Adjustment under 35 U.S.C. 154(b) in the above-identified application. The Notice stated that the patent term adjustment to date is 237 days.

First, pursuant to 37 CFR 1.702(a)(2), applicant argues that a period of adjustment of 30 days should be entered in connection with the Office's mailing of a non-final Office action on October 16, 2007 in response to applicant's May 16, 2007 reply. A reply was filed on May 16, 2007 in response to the March 14, 2007 final Office action. On August 6, 2007 a non-final Office action was mailed. Applicant asserts the August 6, 2007 was subsequently vacated on October 16, 2007, when a second non-final Office action was mailed. It is applicant's position that the withdrawal of a timely Office action and the issuance of new Office action after four months from the date a reply was filed should not be considered timely for the purposes of calculating patent term adjustment.

Applicant would have the Office accord 30 days of Office delay on the basis that the non-final Office action of October 16, 2007 more completely responds to his May 16, 2007 reply after final Office action. Applicant argues that the Office failed to mail an action under 35 U.S.C. § 132 not later than 4 months after applicant's May 16, 2007 reply under § 1.113 was filed.

37 CFR 1.702(a) provides, in pertinent part, that grounds for adjustment of patent term due to examination delay include failure of the Office to

> (2) Respond to a reply under 35 U.S.C. 132 or to an appeal taken under 35 U.S.C. 134 not later than four months after the date on which the reply was filed or the appeal was taken;

37 CFR 1.703(a) provides, in pertinent part, the periods are calculated as follows:

> (2) The number of days, if any, in the period beginning on the day after the date that is four months after the date a reply under § 1.111 was filed and ending on the date of mailing of either an action under 35 U.S.C. 132, or a notice of allowance under 35 U.S.C. 151, whichever occurs first;
>
> (3) The number of days, if any, in the period beginning on the day after the date that is four months after the date a reply in compliance with § 1.113(c) was filed and ending on the date of mailing of either an action under 35 U.S.C. 132, or a notice of allowance under 35 U.S.C. 151, whichever occurs first;

Regarding the period of Office delay, pursuant to 37 C.F.R. § 1.703(a)(3), applicant submitted a RCE and amendment on May 16, 2007. The Office mailed a non-final Office action on August 6, 2007, which is within the four months of the filing of the May 16, 2007 RCE and amendment. Therefore, no period of adjustment was entered pursuant to 37 CFR 1.703(a)(3).

Applicant's argument that this calculation is incorrect has been considered but not found persuasive. In reply to applicant's May 16, 2007 reply, the Office mailed a non-final Office action on August 6, 2007. This was in response to and within four months of the date the reply was filed. The fact that the Office mailed an Office action on October 16, 2007 which also referenced the reply filed May 16, 2007 does not negate the fact that the Office first mailed an action under 35 U.S.C. §132 in response on August 6, 2007. Accordingly, Office delay in taking action in response to the reply filed May 16, 2007 was properly calculated as zero (0) days.

Second, applicant asserts the Office improperly entered a reduction pursuant to 37 CFR 1.704(c)(8) in connection with the filing of an Information Disclosure Statement on February 4, 2010 after applicant filed an appeal brief on November 9, 2009. A review of the application history reveals that applicant is correct. Ordinarily there are no reductions during the appeal period. The February 4, 2010 IDS is not a supplemental reply within the meaning on 37 CFR 1.704(c)(8) because no period was running against applicant. Therefore, there was no failure to engage and no reduction is warranted in connection with the filing of the IDS on February 4, 2010. Accordingly, the

reduction of 87 days associated with the filing of the February 4, 2010 IDS is being removed.

In view thereof, the determination of patent term adjustment at the time of mailing of the Notice of Allowance is **three hundred twenty-four (324) days** (491 days of Office delay - 167 days of applicant delay).

The Office acknowledges submission of the $200.00 fee set forth in 37 CFR 1.18(e) for consideration of the application for patent term adjustment under 37 CFR 1.705(b).

Any request for reconsideration of the patent term adjustment indicated on the patent must be timely filed within 2 months after issuance pursuant to 37 CFR 1.705(d) and must include payment of the required fee under 37 CFR 1.18(e).

The Office of Data Management has been advised of this decision. This application is being referred to the Office of Data Management for issuance of the patent.

Telephone inquiries specific to this decision should be directed to Senior Petitions Attorney Shirene Willis Brantley at (571) 272-3230.

Anthony Knight
Director
Office of Petitions

Enclosure: Copy of adjusted PALM calculation

Day : Saturday
Date: 8/14/2010

PALM INTRANET

Time: 14:51:35

PTA Calculations for Application: 10/706100			
Application Filing Date:	11/12/2003	PTO Delay (PTO):	491
Issue Date of Patent:		Three Years:	0
Pre-Issue Petitions:	0	Applicant Delay (APPL):	254
Post-Issue Petitions:	0	Total PTA (days):	324
PTO Delay Adjustment:	87		

File Contents History

Number	Date	Contents Description	PTO	APPL	START
132	08/14/2010	ADJUSTMENT OF PTA CALCULATION BY PTO	87		
119	02/16/2010	ISSUE REVISION COMPLETED			
118	02/16/2010	NOTICE OF ALLOWANCE DATA VERIFICATION COMPLETED			
117	02/16/2010	CASE DOCKETED TO EXAMINER IN GAU			
116	02/16/2010	DOCUMENT VERIFICATION			
115	02/05/2010	EXAMINER INTERVIEW SUMMARY RECORD (PTOL - 413)			
114	02/04/2010	REFERENCE CAPTURE ON IDS			
113	02/04/2010	INFORMATION DISCLOSURE STATEMENT (IDS) FILED		87	104
112	02/08/2010	EXAMINER'S AMENDMENT COMMUNICATION			
111	02/08/2010	NOTICE OF ALLOWABILITY			
110	03/05/2009	INFORMATION DISCLOSURE STATEMENT CONSIDERED			
109	05/08/2009	INFORMATION DISCLOSURE STATEMENT CONSIDERED			
108	02/04/2010	INFORMATION DISCLOSURE STATEMENT CONSIDERED			
107	02/04/2010	INFORMATION DISCLOSURE STATEMENT (IDS) FILED			
106	11/24/2009	APPEAL BRIEF REVIEW COMPLETE			
105	11/17/2009	DATE FORWARDED TO EXAMINER			
104	11/09/2009	APPEAL BRIEF FILED			
103	11/09/2009	REQUEST FOR EXTENSION OF TIME - GRANTED			
102	11/05/2009	EMAIL NOTIFICATION			
101	11/05/2009	MAIL ADVISORY ACTION (PTOL - 303)			

100	11/03/2009	ADVISORY ACTION (PTOL-303)			
99	08/15/2008	REFERENCE CAPTURE ON IDS			
98	08/15/2008	INFORMATION DISCLOSURE STATEMENT (IDS) FILED		0	75
97	05/08/2009	INFORMATION DISCLOSURE STATEMENT (IDS) FILED			
96	05/08/2009	INFORMATION DISCLOSURE STATEMENT (IDS) FILED			
95	05/08/2009	NOTICE OF APPEAL FILED		30	81
94	05/08/2009	REQUEST FOR EXTENSION OF TIME - GRANTED			
93	05/08/2009	INFORMATION DISCLOSURE STATEMENT (IDS) FILED			
92	03/12/2009	EMAIL NOTIFICATION			
91	03/12/2009	MAIL ADVISORY ACTION (PTOL - 303)			
90	03/09/2009	ADVISORY ACTION (PTOL-303)			
89	03/05/2009	INFORMATION DISCLOSURE STATEMENT (IDS) FILED			
88	02/12/2009	DATE FORWARDED TO EXAMINER			
87	02/10/2009	AMENDMENT AFTER FINAL REJECTION			
86	02/12/2009	EMAIL NOTIFICATION			
85	02/12/2009	MAIL EXAMINER INTERVIEW SUMMARY (PTOL - 413)			
84	02/03/2009	EXAMINER INTERVIEW SUMMARY RECORD (PTOL - 413)			
83	01/08/2009	ELECTRONIC REVIEW			
82	01/08/2009	EMAIL NOTIFICATION			
81	01/08/2009	MAIL FINAL REJECTION (PTOL - 326)	24		75
80	01/05/2009	FINAL REJECTION			
79	08/15/2008	INFORMATION DISCLOSURE STATEMENT CONSIDERED			
78	08/15/2008	INFORMATION DISCLOSURE STATEMENT (IDS) FILED			
77	08/15/2008	INFORMATION DISCLOSURE STATEMENT (IDS) FILED			
76	09/18/2008	DATE FORWARDED TO EXAMINER			
75	08/15/2008	RESPONSE TO RULE 105 REQUIRED FOR INFORMATION FILED			
74	07/16/2008	MAIL INDEPENDENT RULE 105 COMMUNICATION			
		INDEPENDENT COMMUNICATION UNDER RULE			

73	07/14/2008	105			
65	05/15/2008	DATE FORWARDED TO EXAMINER			
64	04/08/2008	RESPONSE AFTER NON-FINAL ACTION		83	58
63	04/08/2008	REQUEST FOR EXTENSION OF TIME - GRANTED			
62	04/08/2008	NEW OR ADDITIONAL DRAWING FILED			
61	10/29/2007	MAIL EXAMINER INTERVIEW SUMMARY (PTOL - 413)			
60	10/23/2007	EXAMINER INTERVIEW SUMMARY RECORD (PTOL - 413)			
59	10/16/2007	MAIL NOTICE OF WITHDRAWN ACTION			
58	10/16/2007	MAIL NON-FINAL REJECTION			
57	10/15/2007	NON-FINAL REJECTION			
56	10/15/2007	DATE FORWARDED TO EXAMINER			
55	10/15/2007	LETTER WITHDRAWING / VACATING OFFICE ACTION			
54	09/18/2007	MISCELLANEOUS INCOMING LETTER			
53	09/11/2007	EXAMINER INTERVIEW SUMMARY RECORD (PTOL - 413)			
52	08/06/2007	MAIL NON-FINAL REJECTION			
51	08/03/2007	NON-FINAL REJECTION			
50	06/18/2007	CASE DOCKETED TO EXAMINER IN GAU			
49	05/16/2007	AFFIDAVIT(S) (RULE 131 OR 132) OR EXHIBIT(S) RECEIVED			
48	05/23/2007	DATE FORWARDED TO EXAMINER			
47	05/16/2007	AMENDMENT SUBMITTED/ENTERED WITH FILING OF CPA/RCE			
46	05/23/2007	DATE FORWARDED TO EXAMINER			
45	05/16/2007	REQUEST FOR CONTINUED EXAMINATION (RCE)			
44	05/23/2007	DISPOSAL FOR A RCE / CPA / R129			
43	05/16/2007	WORKFLOW - REQUEST FOR RCE - BEGIN			
42	05/01/2007	CORRESPONDENCE ADDRESS CHANGE			
41	05/01/2007	CHANGE IN POWER OF ATTORNEY (MAY INCLUDE ASSOCIATE POA)			
40	04/30/2007	MAIL EXAMINER INTERVIEW SUMMARY (PTOL - 413)			
39	03/08/2007	EXAMINER INTERVIEW SUMMARY RECORD (PTOL - 413)			
38	03/14/2007	MAIL FINAL REJECTION (PTOL - 326)			

37	03/07/2007	FINAL REJECTION			
36	12/26/2006	INFORMATION DISCLOSURE STATEMENT CONSIDERED			
35	12/26/2006	REQUEST FOR FOREIGN PRIORITY (PRIORITY PAPERS MAY BE INCLUDED)			
34	12/26/2006	REFERENCE CAPTURE ON IDS			
33.7	12/26/2006	INFORMATION DISCLOSURE STATEMENT (IDS) FILED		0	31
33	12/26/2006	INFORMATION DISCLOSURE STATEMENT (IDS) FILED			
32	01/25/2007	DATE FORWARDED TO EXAMINER			
31	12/26/2006	RESPONSE AFTER NON-FINAL ACTION		54	29
30	12/26/2006	REQUEST FOR EXTENSION OF TIME - GRANTED			
29	08/02/2006	MAIL NON-FINAL REJECTION			
28	07/28/2006	NON-FINAL REJECTION			
27	06/21/2004	INFORMATION DISCLOSURE STATEMENT CONSIDERED			
26	10/22/2004	INFORMATION DISCLOSURE STATEMENT CONSIDERED			
25	05/25/2006	DATE FORWARDED TO EXAMINER			
24	05/22/2006	RESPONSE TO ELECTION / RESTRICTION FILED			
23	04/24/2006	MAIL RESTRICTION REQUIREMENT	467		-1
22	04/20/2006	REQUIREMENT FOR RESTRICTION / ELECTION			
21	10/06/2005	PRELIMINARY AMENDMENT			
20	06/28/2005	CASE DOCKETED TO EXAMINER IN GAU			
19	10/22/2004	REFERENCE CAPTURE ON IDS			
18.7	10/22/2004	INFORMATION DISCLOSURE STATEMENT (IDS) FILED			
18	10/22/2004	INFORMATION DISCLOSURE STATEMENT (IDS) FILED			
17	07/13/2004	IFW TSS PROCESSING BY TECH CENTER COMPLETE			
16	07/13/2004	CASE DOCKETED TO EXAMINER IN GAU			
15	06/21/2004	REFERENCE CAPTURE ON IDS			
14.7	06/21/2004	INFORMATION DISCLOSURE STATEMENT (IDS) FILED			
14	06/21/2004	INFORMATION DISCLOSURE STATEMENT (IDS) FILED			
13	04/07/2004	APPLICATION RETURN FROM OIPE			

12	04/07/2004	APPLICATION RETURN TO OIPE			
11	04/07/2004	APPLICATION DISPATCHED FROM OIPE			
10	04/07/2004	APPLICATION IS NOW COMPLETE			
9	03/29/2004	ADDITIONAL APPLICATION FILING FEES			
8	03/29/2004	A STATEMENT BY ONE OR MORE INVENTORS SATISFYING THE REQUIREMENT UNDER 35 USC 115, OATH OF THE APPLIC			
7	03/09/2004	NOTICE MAILED--APPLICATION INCOMPLETE--FILING DATE ASSIGNED			
5	02/24/2004	CLEARED BY L&R (LARS)			
4	01/30/2004	REFERRED TO LEVEL 2 (LARS) BY OIPE CSR			
3	01/30/2004	CASE CLASSIFIED BY OIPE			
2	12/22/2003	IFW SCAN & PACR AUTO SECURITY REVIEW			
1	11/12/2003	INITIAL EXAM TEAM NN			

Search Another: Application# [ ] Search

EXPLANATION OF PTA CALCULATION

EXPLANATION OF PTE CALCULATION

To go back, right click here and select Back. To go forward, right click here and select Forward. To refresh, right click here and select Refresh.

Back to OASIS | Home page

UNITED STATES PATENT AND TRADEMARK OFFICE

Commissioner for Patents
United States Patent and Trademark Office
P.O. Box 1450
Alexandria, VA 22313-1450
www.uspto.gov

GOODWIN PROCTER LLP
PATENT ADMINISTRATOR
53 STATE STREET
EXCHANGE PLACE
BOSTON MA 02109-2881

MAILED

NOV 23 2010

OFFICE OF PETITIONS

In re Patent of Fein	:	
Patent No. 7,799,761	:	
Issued: September 21, 2010	:	
Application No. 10/706,100	:	ON APPLICATION FOR
Filed: November 12, 2003	:	PATENT TERM ADJUSTMENT
Atty Docket No. SER-001	:	

This is in response to the PETITION UNDER 37 C.F.R. § 1.181 FOR RECONSIDERATION OF PATENT TERM ADJUSTMENT, filed October 17, 2010. The petition was filed within two months of the mail date of the August 17, 2010 decision on petition. Therefore, it will be treated as a renewed petition under 37 CFR 1.705(b).

The $400.00 fee submitted with the present renewed petition is unnecessary and will be credited to patentee's credit card.

The renewed petition under 37 CFR 1.705(b) is **DISMISSED.**

Patentee renews his argument that, pursuant to 37 CFR 1.702(a)(2), a period of adjustment of 30 days should be entered in connection with the Office's mailing of a non-final Office action on October 16, 2007.

Pursuant to 37 CFR 1.702(a)(2), patentee argues that a period of adjustment of 30 days should be entered in connection with the Office's mailing of a non-final Office action on October 16, 2007 in response to applicant's May 16, 2007 reply. A reply was filed on May 16, 2007 in response to the March 14, 2007 final Office action. On August 6, 2007 a non-final Office action was mailed. Patentee asserts the August 6, 2007 non-final Office action was subsequently vacated on October 16, 2007, when a second non-final Office action was mailed. It is patentee's position that the withdrawal of a timely Office action and the issuance of new Office action after four months from the date a reply was filed should not be considered timely for the purposes of calculating patent term adjustment.

Patentee would have the Office accord 30 days of Office delay on the basis that the non-final Office action of October 16, 2007 more completely responds to his May 16, 2007 reply after final Office action. Patentee argues that the Office failed to mail an action under 35 U.S.C. § 132 not later than 4 months after applicant's May 16, 2007 reply under § 1.113 was filed.

37 CFR 1.702(a) provides, in pertinent part, that grounds for adjustment of patent term due to examination delay include failure of the Office to

> (2) Respond to a reply under 35 U.S.C. 132 or to an appeal taken under 35 U.S.C. 134 not later than four months after the date on which the reply was filed or the appeal was taken;

37 CFR 1.703(a) provides, in pertinent part, the periods are calculated as follows:

> (2) The number of days, if any, in the period beginning on the day after the date that is four months after the date a reply under § 1.111 was filed and ending on the date of mailing of either an action under 35 U.S.C. 132, or a notice of allowance under 35 U.S.C. 151, whichever occurs first;
>
> (3) The number of days, if any, in the period beginning on the day after the date that is four months after the date a reply in compliance with § 1.113(c) was filed and ending on the date of mailing of either an action under 35 U.S.C. 132, or a notice of allowance under 35 U.S.C. 151, whichever occurs first;

Regarding the period of Office delay, pursuant to 37 C.F.R. § 1.703(a)(3), patentee submitted a RCE and amendment on May 16, 2007. The Office mailed a non-final Office action on August 6, 2007, which is within the four months of the filing of the May 16, 2007 RCE and amendment. Therefore, no period of adjustment was entered pursuant to 37 CFR 1.703(a)(3).

Patentee's argument that this calculation is incorrect has been considered but not found persuasive. In reply to applicant's May 16, 2007 reply, the Office mailed a non-final Office action on August 6, 2007. This was in response to and within four months of the date the reply was filed. The fact that the Office mailed an Office action on October 16, 2007 which also referenced the reply filed May 16, 2007 does not negate the fact

that the Office first mailed an action under 35 U.S.C. §132 in response on August 6, 2007.

Patentee is correct that an Office action may be vacated by a T.C. Director. If this occurs, the effect is that the Office action is treated as if it were never mailed. In this instance, the August 6, 2007 non-final Office action was **not** vacated by the T.C. Director. The October 16, 2007 non-final Office action was only signed by the examiner. Accordingly, Office delay in taking action in response to the reply filed May 16, 2007 was properly calculated as zero (0) days.

In view thereof, no adjustment will be entered in connection with the Office's mailing of a supplemental non-final Office action on October 16, 2007.

Patentee is reminded that any request for reconsideration of the patent term adjustment indicated on the patent must be timely filed within 2 months after issuance pursuant to 37 CFR 1.705(d) and must include payment of the required fee under 37 CFR 1.18(e).

Telephone inquiries specific to this decision should be directed to the undersigned at (571) 272-3230.

Shirene Willis Brantley

Shirene Willis Brantley
Senior Petitions Attorney
Office of Petitions

SPE RESPONSE FOR CERTIFICATE OF CORRECTION

Paper No.: _____

DATE : 04/04/11

TO SPE OF : ART UNIT 2626

SUBJECT : Request for Certificate of Correction for Appl. No.: 10706102 Patent No.: 7412385

CofC mailroom date: 03/21/11

Please respond to this request for a certificate of correction within 7 days.

FOR IFW FILES:

Please review the requested changes/corrections as shown in the **COCIN** document(s) in the IFW application image. No new matter should be introduced, nor should the scope or meaning of the claims be changed.

Please complete the response (see below) and forward the completed response to scanning using document code **COCX**.

FOR PAPER FILES:

Please review the requested changes/corrections as shown in the attached certificate of correction. Please complete this form (see below) and forward it with the file to:

Certificates of Correction Branch (C of C)
Randolph Square 9D40-D
Palm Location 7580

You can fax the Directors/SPE response to 571-270-9990

Lamonte Newsome

Certificates of Correction Branch

571-272-3421

Thank You For Your Assistance

The request for issuing the above-identified correction(s) is hereby:

Note your decision on the appropriate box.

☑ **Approved**	**All** changes apply.
☐ **Approved in Part**	Specify below which changes **do not** apply.
☐ **Denied**	State the reasons for denial below.

Comments: _____

/David R. Hudspeth/ 2626

SPE **Art Unit**

Doc Code: PET.AUTO **Document Description: Petition automatically granted by EFS-Web**	PTO/SB/83 U.S. Patent and Trademark Office Department of Commerce

Electronic Petition Request	**REQUEST FOR WITHDRAWAL AS ATTORNEY OR AGENT AND CHANGE OF CORRESPONDENCE ADDRESS**
Application Number	10706136
Filing Date	12-Nov-2003
First Named Inventor	Gary Peck
Art Unit	3781
Examiner Name	STEPHEN CASTELLANO
Attorney Docket Number	397.091300
Title	Painter's tool tray

◉ Please withdraw me as attorney or agent for the above identified patent application and the practitioners of record associated with Customer Number: 23445

The reason(s) for this request are those described in 37 CFR:

10.40(b)(4)

10.40(c)(1)(iv)

Certifications

☒ I/We have given reasonable notice to the client, prior to the expiration of the response period, that the practitioner(s) intend to withdraw from employment

☒ I/We have delivered to the client or a duly authorized representative of the client all papers and property (including funds) to which the client is entitled

☒ I/We have notified the client of any responses that may be due and the time frame within which the client must respond

Change the correspondence address and direct all future correspondence to the first named inventor or assignee that has properly made itself of record pursuant to 37 CFR 3.71:

Name	Gary Peck
Address	37 Watson Avenue
City	Westfield
State	NY
Postal Code	14787

Country	US
I am authorized to sign on behalf of myself and all withdrawing practitioners.	
Signature	/Carl Hjort/
Name	Carl A. Hjort, III
Registration Number	56934

UNITED STATES PATENT AND TRADEMARK OFFICE

Commissioner for Patents
United States Patent and Trademark Office
P.O. Box 1450
Alexandria, VA 22313-1450
www.uspto.gov

Decision Date : December 6, 2011

In re Application of :

Gary Peck

Application No : 10706136

Filed : 12-Nov-2003

Attorney Docket No : 397.091300

DECISION ON REQUEST TO WITHDRAW AS ATTORNEY/AGENTOF RECORD

This is an electronic decision on the Request to Withdraw as attorney or agent of record under 37 CFR § 1.36(b), filed December 6, 2011

The request is **APPROVED.**

The request was signed by Carl A. Hjort, III (registration no. 56934) on behalf of all attorneys/agents associated with Customer Number 23445 . All attorneys/agents associated with Cusotmer Number 23445 have been withdrawn.

Since there are no remaining attorneys of record, all future communications from the Office will be directed to the first named inventor or assignee that has properly made itself of record pursuant to 37 CFR 3.71, with correspondence address:

Name	Gary Peck
Name2	
Address 1	37 Watson Avenue
Address 2	
City	Westfield
State	NY
Postal Code	14787
Country	US

As a reminder, requester is required to inform the first named inventor or assignee that has properly made itself of record pursuant to 37 CFR 3.71 of the electronically processed petition.

Telephone inquiries concerning this decision should be directed to the Patent Electronic Business Center (EBC) at 866-217-9197.

Office of Petitions

UNITED STATES PATENT AND TRADEMARK OFFICE

Commissioner for Patents
United States Patent and Trademark Office
P.O. Box 1450
Alexandria, VA 22313-1450
www.uspto.gov

THEMI ANAGNOS
437 NORTH ASHLAND AVE.
LA GRANGE PARK IL 60526

MAILED
JUN 14 2011
OFFICE OF PETITIONS

In re Application of :
Smith et al. :
Application No. 10/706,252 :
Filed: November 12, 2003 :
Attorney Docket No. Max Nut 35447.03.0001 :
For: REMOVABLE ANCHOR AND FASTENER

ON PETITION

This is a decision on the petition, filed May 15, 2011, under 37 CFR 1.137(b) to revive the above-identified application.

The petition is **GRANTED**.

The above-identified application became abandoned for failure to timely submit a reply within three (3) months of the mailing of the June 8, 2010 non-final Office action. No timely response being received and no extensions of time being obtained under the provisions of 37 CFR 1.136(a), this application became abandoned on September 9, 2010. A Notice of Abandonment was mailed on May 3, 2011.

Applicants have submitted an amendment in reply to the June 8, 2010 non-final Office action, an acceptable statement of the unintentional nature of the delay in responding to the June 8, 2010 non-final Office action, and the $810.00 petition fee.

All of the requirements under 37 CFR 1.137(b) being met, the petition is granted.

The application file does not indicate a change of address has been filed in this case, although the address given on the petition differs from the address of record. A change of address should be filed in this case in accordance with MPEP 601.03. A courtesy copy of this decision is being mailed to the address noted on the petition. However, until otherwise instructed, all future correspondence regarding this application will be mailed solely to the address of record.

After the mailing of this decision, the application will be returned to Technology Center GAU 3677 for consideration of the amendment filed on May 15, 2011.

Telephone inquiries should be directed to the undersigned at (571) 272-3230.

Shirene Willis Brantley
Senior Petitions Attorney
Office of Petitions

CC: THEMI ANAGNOS
115 ROSE
LAKE ZURICH IL 60047

UNITED STATES PATENT AND TRADEMARK OFFICE

COMMISSIONER FOR PATENTS
UNITED STATES PATENT AND TRADEMARK OFFICE
P.O. BOX 1450
ALEXANDRIA, VA 22313-1450
www.uspto.gov

NOVARTIS VACCINES AND
DIAGNOSTICS INC.
INTELLECTUAL PROPERTY- X100B
P.O. BOX 8097
Emeryville CA 94662-8097

MAILED

SEP 27 2010

OFFICE OF PETITIONS

In re Application :
Hannah, et al. :
Application No. 10/706,328 : PATENT TERM ADJUSTMENT
Filing or 371(c) Date: November 12, 2003 :
Dkt. No.: 072121-0366 :

This is in response to the application for patent term adjustment under 37 CFR 1.705(b), filed September 10, 2010.

Applicant submits that the correct patent term adjustment to be indicated on the patent is 1217 days, not zero days as calculated by the Office as of the mailing of the initial determination of patent term adjustment. Applicant requests this correction on the basis that the Office will take in excess of three years to issue this patent.

Insofar as the instant application for patent term adjustment requests reconsideration of the patent term adjustment as it relates to the Office's failure to issue the patent within 3 years of the filing date, the application for patent term adjustment under 37 CFR 1.705(b) is DISMISSED as PREMATURE.

Knowledge of the actual date the patent issues is required to calculate the amount, if any, of additional patent term patentee is entitled to for Office failure to issue the patent within 3 years. See, § 1.702(b). (This is true even where a request for continued examination (RCE) was filed). The computer will not undertake the § 1.702(b) calculation until the actual date of issuance of the patent has been determined. Likewise, the computer will not calculate any further Office delay under § 1.702(a)(4) or applicant delay under § 1.704(c)(10) until the actual date of issuance of the patent has been determined. As such, the Office can not make a determination on the correctness of the patent term adjustment until the patent has issued.

Requesting reconsideration of the patent term adjustment to be indicated on the patent based on the initial determination of patent term adjustment and a projected issuance date of the patent (or even the filing date of the request for continued examination) is premature. Accordingly, it is appropriate to dismiss as premature such a request.

Applicant is advised that they may wait until the time of the issuance of the patent and file a request for reconsideration of the patent term adjustment pursuant to 37 CFR 1.705(d). As the

USPTO does not calculate the amount of time earned pursuant to 37 CFR 1.702(b) until the time of the issuance of the patent, the Office will consider any request for reconsideration of the patent term adjustment due to an error in the calculation of 37 CFR 1.702(b) to be timely if the request for reconsideration is filed within two months of the issuance of the patent. However, as to all other bases for contesting the initial determination of patent term adjustment received with the notice of allowance, applicant must timely file an application for patent term adjustment prior to the payment of the issue fee[1].

Receipt is hereby acknowledged of the required patent term adjustment application fee under 37 CFR 1.705(b) of $200.00. See, 37 CFR 1.18(e). As the submission of the fee is required for reconsideration of the patent term adjustment, the request for refund is hereby DISMISSED.

Any request for reconsideration of the patent term adjustment indicated on the patent must be timely filed within 2 months after issuance pursuant to 37 CFR 1.705(d) and **must** include payment of the required fee under 37 CFR 1.18(e).

There is no indication that the petition is signed by a registered patent attorney or patent agent of record. However, in accordance with 37 CFR 1.34, practitioner's signature appearing on the correspondence shall constitute a representation to the United States Patent and Trademark Office that he is authorized to represent the particular party in whose behalf he acts. If practitioner desires to receive correspondence regarding this file, the appropriate power of attorney documents must be submitted. A courtesy copy of this decision is being mailed to practitioner, the petitioner herein. However, until otherwise instructed, all future correspondence regarding this application file will be directed solely to the above-noted correspondence address of record.

The application file is being forwarded to the Office of Data Management for issuance of the patent. The patent term adjustment indicated on the patent (as shown on the Issue Notification mailed about three weeks prior to patent issuance) will include any additional adjustment accrued both for Office delay in issuing the patent more than four months after payment of the issue fee and satisfaction of all outstanding requirements, and for the Office taking in excess of three years to issue the patent (to the extent that the three-year period does not overlap with periods already accorded).

---

[1] For example, if applicant disputes both the calculation of patent term adjustment under 37 CFR 1.702(a)(1) for Office failure to mail a first Office action or notice of allowance not later than fourteen months after the date on which the application was filed and under 37 CFR 1.702(b) for Office failure to issue a patent within three years of the actual filing date of the application, then applicant must still timely file an application for patent term adjustment prior to the payment of the issue fee to contest the calculation of Office delay in issuing a first Office action or notice of allowance. See 37 CFR 1.705(b) and 35 U.S.C. 154(b)(3)(B). A dispute as to the calculation of the §1.702(a)(1) period raised on request for reconsideration of patent term adjustment under 37 CFR 1.705(d) will be dismissed as untimely filed.

Telephone inquiries specific to this decision should be directed to the undersigned at (571) 272-3205.

/ALESIA M. BROWN/

Alesia M. Brown
Petitions Attorney
Office of Petitions

CC: Joseph P. Meara
FOLEY & LARDNER LLP
150 EAST GILMAN STREET
P.O. BOX 1497
MADISON, WI 53701-1497

UNITED STATES PATENT AND TRADEMARK OFFICE

COMMISSIONER FOR PATENTS
UNITED STATES PATENT AND TRADEMARK OFFICE
P.O. BOX 1450
ALEXANDRIA, VA 22313-1450
www.uspto.gov

Paper No.

TOWNSEND AND TOWNSEND AND CREW, LLP
TWO EMBARCADERO CENTER
EIGHTH FLOOR
SAN FRANCISCO CA 94111-3834

MAILED

AUG 30 2010

OFFICE OF PETITIONS

In re Patent No. 7,569,542	:	DECISION ON REQUEST
Eckert et al.	:	FOR
Issue Date: August 4, 2009	:	RECONSIDERATION OF
Application No. 10/706,391	:	PATENT TERM ADJUSTMENT
Filed: November 12, 2003	:	and
Atty Docket No.02307K-186431US	:	NOTICE OF INTENT TO ISSUE
	:	CERTIFICATE OF CORRECTION

This is a decision on the petition filed on September 29, 2009, which is being treated as a petition under 37 CFR 1.705(d) requesting that the patent term adjustment indicated on the above-identified patent be corrected to indicate that the term of the above-identified patent is extended or adjusted by **four hundred eighty-two (482)** days.

The petition to correct the patent term adjustment indicated on the above-identified patent is **GRANTED to the extent indicated herein.** The patent term adjustment is corrected to indicate that the term of the above-identified patent is extended or adjusted by **four hundred eighty-one (481)** days.

As the period from the filing date of the request for continued examination (RCE) to the issue date of the patent is not included in the "B" delay period, the over three year period begins on November 13, 2006 and ends on February 21, 2008, the day *before* the RCE was filed. See 35 U.S.C. 154(b)(1)(B)(i). Thus, the over 3 year period is 466 not 467 days. Thus, the patent term adjustment is increased to 481 days. (The 116 days entered at issuance for B delay has been removed and the period of adjustment of 466 days entered).

The Office will *sua sponte* issue a certificate of correction. Pursuant to 37 CFR 1.322, the Office will not issue a certificate of correction without first providing assignee or patentee an opportunity to be heard. Accordingly, patentees are given **one (1) month or thirty (30) days**, whichever is longer, from the mail date of this decision to respond. No extensions of time will be granted under § 1.136.

Nothing in this decision shall be construed as a waiver of the requirement of 35 U.S.C. 154(b)(4) that any civil action by an applicant dissatisfied with a determination made by the Director under 35 U.S.C. 154(b)(3) be filed in the United States District Court for the District of Columbia within 180 days after the grant of the patent.

The Office acknowledges submission of the $200.00 fee set forth in 37 CFR 1.18(e). No additional fees are required.

The application is being forwarded to the Certificates of Branch for issuance of a certificate of correction. The Office will issue a certificate of correction indicating that the term of the above-identified patent is extended or adjusted by **four hundred eighty-one (481)** days.

Telephone inquiries specific to this matter should be directed to the undersigned at (571) 272-3219.

Nancy Johnson
Senior Petitions Attorney
Office of Petitions

Enclosure: Copy of DRAFT Certificate of Correction

UNITED STATES PATENT AND TRADEMARK OFFICE

CERTIFICATE OF CORRECTION

PATENT : 7,569,542 B2

DATED : **August 4, 2009** **DRAFT**

INVENTOR(S) : Eckert et al.

It is certified that error appears in the above-identified patent and that said Letters Patent is hereby
corrected as shown below:

On the cover page,

[*] Notice: Subject to any disclaimer, the term of this patent is extended or adjusted under 35 USC 154(b) by 131 days

Delete the phrase "by 131 days" and insert – by 481 days--

UNITED STATES PATENT AND TRADEMARK OFFICE

Commissioner for Patents
United States Patent and Trademark Office
P.O. Box 1450
Alexandria, VA 22313-1450
www.uspto.gov

UNITED STATES DEPARTMENT OF ENERGY
1000 INDEPENDENCE AVENUE, S.W.
ATTN: GC-62 (CHI), MS 6F-067
WASHINGTON DC 20585-0162

MAILED
APR 12 2011
OFFICE OF PETITIONS

In re Patent No. 7,159,841	:	
Issue Date: January 9, 2007	:	
Application No. 10/706,477	:	ON PETITION
Filed: November 7, 2003	:	
Attorney Docket No. S-100,791	:	

This is a decision on the petition under 37 CFR 1.378(c), filed February 24, 2011, to accept the delayed payment of a maintenance fee for the above-identified patent.

The petition is **DISMISSED**.

If reconsideration of this decision is desired, a petition for reconsideration under 37 CFR 1.378(e) must be filed within TWO (2) MONTHS from the mail date of this decision. No extension of this two-month time limit can be granted under 37 CFR 1.136(a) or (b). This is **not** a final agency action within the meaning of 5 U.S.C. § 704.

Any petition for reconsideration of this decision must be accompanied by the petition fee of $400 as set forth in 37 CFR 1.17(f). The petition for reconsideration must include the lacking item(s) noted below, since, after a decision on the petition for reconsideration, no further reconsideration or review of the matter will be undertaken by the Director.

This patent expired on January 10, 2011 for failure to pay the three and one-half year maintenance fee. Since this petition was submitted within twenty-four months after the six-month grace period provided in 37 CFR 1.362(e), the petition was timely filed under the provisions of 37 CFR 1.378(c).

A petition to accept the unintentionally delayed payment of a maintenance fee under 35 U.S.C. 41(c) and 37 CFR 1.378(c) must be accompanied by: (1) a statement that the delay was unintentional; (2) payment of the appropriate maintenance fee, unless previously submitted; (3) payment of the surcharge set forth in 37 CFR 1.20(i)(2). This petition lacks item 1 & 3 above.

A fee of $1,640 was submitted herewith petition, however there is still $1,000 due to complete the maintenance fee and the surcharge fee payment ***(three and one half year maintenance fee= $980; surcharge= $1,640; Total= $2,620)***.

Further correspondence with respect to this matter should be addressed as follows:

By Mail: Mail Stop PETITION
Commissioner for Patents
Post Office Box 1450
Alexandria, VA 22313-1450

By hand: U. S. Patent and Trademark Office
Customer Service Window, Mail Stop Petitions
Randolph Building
401 Dulany Street
Alexandria, VA 22314

The centralized facsimile number is (571) 273-8300.

Telephone inquiries should be directed to Terri Johnson at (571) 272-2991.

/Terri Johnson/
Terri Johnson
Petitions Examiner
Office of Petitions

UNITED STATES PATENT AND TRADEMARK OFFICE

Commissioner for Patents
United States Patent and Trademark Office
P.O. Box 1450
Alexandria, VA 22313-1450
www.uspto.gov

UNITED STATES DEPARTMENT OF ENERGY
1000 INDEPENDENCE AVENUE, S.W.
ATTN: GC-62 (CHI), MS 6F-067
WASHINGTON DC 20585-0162

MAILED
JUN 16 2011
OFFICE OF PETITIONS

In re Patent No. 7,159,841	:	
Issue Date: January 9, 2007	:	
Application No. 10/706,477	:	ON PETITION
Filed: November 7, 2003	:	
Attorney Docket No. S-100,791	:	

This is a decision on the renewed petition under 37 CFR 1.378(c), filed May 31, 2011, to accept the unintentionally delayed payment of a maintenance fee for the above-identified patent.

The petition is **GRANTED**.

This patent expired on January 10, 2011 for failure to pay the three and one-half year maintenance fee. Since this petition was submitted within twenty-four months after the six-month grace period provided in 37 CFR 1.362(e), the petition was timely filed under the provisions of 37 CFR 1.378(c).

The maintenance fee is hereby accepted and the above-identified patent is reinstated as of the mail date of this decision.

Telephone inquiries concerning this decision should be directed to Terri Johnson at (571) 272-2991.

The patent file is being forwarded to Files Repository.

/Terri Johnson/
Terri Johnson
Petitions Examiner
Office of Petitions

x

SPE RESPONSE FOR CERTIFICATE OF CORRECTION

DATE : 10/26/10 **Paper No.:** ____

TO SPE OF : ART UNIT 3727

SUBJECT : Request for Certificate of Correction for Appl. No.: 10/706491 Patent No.: 7763132

Please respond to this request for a certificate of correction within 7 days.

FOR IFW FILES:

Please review the requested changes/corrections as shown in the **COCIN** document(s) in the IFW application image. No new matter should be introduced, nor should the scope or meaning of the claims be changed.

Please complete the response (see below) and forward the completed response to scanning using document code **COCX**.

FOR PAPER FILES:

Please review the requested changes/corrections as shown in the attached certificate of correction. Please complete this form (see below) and forward it with the file to:

Certificates of Correction Branch (CofC)
Randolph Square – 9D10-A
Palm Location 7580

Virginia Tolbert
Certificates of Correction Branch
571-272-0460

Thank You For Your Assistance

The request for issuing the above-identified correction(s) is hereby:
Note your decision on the appropriate box.

- ☐ **Approved** — **All** changes apply.
- ☒ **Approved in Part** — Specify below which changes **do not** apply.
- ☐ **Denied** — State the reasons for denial below.

Comments: This has been approved in part the hyperlink has been removed. Please delete www.toolhawk.com/tools/. The rest os the text is fine.

/Lee D. Wilson/ /LW/
Primary Examiner 3727

UNITED STATES PATENT AND TRADEMARK OFFICE

9-17-2010

Commissioner for Patents
United States Patent and Trademark Office
P.O. Box 1450
Alexandria, VA 22313-1450
www.uspto.gov

Patent No. : 7,373,030B2
Serial No. : 10/706492
Inventor(s) : Zhan Gao, et. al
Issued : May 13, 2008

Re: Request for Certificate of Correction

Consideration has been given your request for the issuance of a certificate of correction for the above-identified patent under the provisions of Rule(s) 1.322.

The alleged error on the Title page, item [30] is an editing change made in accordance with the style of the Invention Patent Manual.

In view of the foregoing, your request in this matter is hereby denied.

A certificate of correction will issue to correct the remaining error noted in your request.

Further correspondence concerning this matter should be filed and directed to decisions and Certificates of Correction Branch. Any response must be filed within a four week period along with fee of $100.00.

Eva James
For Mary Diggs
Decisions & Certificates
Of Correction Branch
(703)756-1583 or 1580

Kulaniakea Fisher Workman Nydegger
1000 Eagle Gate Tower
60 East South Temple
Salt Lake Cityk Utah 84111

ej

SPE RESPONSE FOR CERTIFICATE OF CORRECTION

Paper No.: _____

DATE : May 4, 2011

TO SPE OF : ART UNIT 1735

SUBJECT : Request for Certificate of Correction for Appl. No.: 10706645 Patent No.: 7888278

CofC mailroom date: April 27, 2011

Please respond to this request for a certificate of correction within 7 days.

FOR IFW FILES:

Please review the requested changes/corrections as shown in the **COCIN** document(s) in the IFW application image. No new matter should be introduced, nor should the scope or meaning of the claims be changed.

Please complete the response (see below) and forward the completed response to scanning using document code **COCX**.

FOR PAPER FILES:

Please review the requested changes/corrections as shown in the attached certificate of correction. Please complete this form (see below) and forward it with the file to:

Certificates of Correction Branch (CofC)
Randolph Square – 9D10-A
Palm Location 7580

Certificates of Correction Branch
703-756-1814

Thank You For Your Assistance

The request for issuing the above-identified correction(s) is hereby:
Note your decision on the appropriate box.

- ☐ **Approved** — **All** changes apply.
- ☐ **Approved in Part** — Specify below which changes **do not** apply.
- ☑ **Denied** — State the reasons for denial below.

Comments: Missing statement from person being added that the inventorship error occurred without any deceptive intention on his part (MPEP 1481.02)

UNITED STATES PATENT AND TRADEMARK OFFICE

Commissioner for Patents
United States Patent and Trademark Office
P.O. Box 1450
Alexandria, VA 22313-1450
www.uspto.gov

HICKMAN PALERMO TRUONG & BECKER, LLP
2055 GATEWAY PLACE
SUITE 550
SAN JOSE CA 95110

MAILED

JAN 25 2011

OFFICE OF PETITIONS

In re Application of

Leonid Mark Tertitski, et al.
Application No. 10/707,343
Filed: December 5, 2003
Attorney Docket No. 60174-0011

DECISION ON PETITION
TO WITHDRAW
FROM RECORD

This is a decision on the Request to Withdraw as attorney or agent of record under 37 C.F.R. § 1.36(b), filed December 20, 2010.

The request is **NOT APPROVED**.

The Office will not decide request to withdraw from representation as practitioner of record which are filed after the patent has issued. Sections 2540 and 2542 of the Manuel of Patent Procedures (MPEP explain that a practitioner does not have to request permission to withdraw as practitioner of record under 37 CFR 1.36 in order to change the address in a patented filed and to directed notices, receipts and other communications relating to maintenance fees. These requests will be placed in the application but will not be treated on their merits. The above mentioned sections of the MPEP recommend the designation of a fee address or submission of a change in correspondence address in the patented file for directing correspondence relating to maintenance fee payments and other correspondences after issuance. See Form PTO/SB/47, entitled, *"Fee Address" Indication Form* and Form PTO/SB/123, entitled, *Change of Correspondence Address, Patent*

Accordingly, the request to withdraw from record cannot be approved because the request was filed after the application was abandoned.

All future communications from the Office will continue to be directed to the address of record until otherwise notified by applicant.

Telephone inquiries concerning this decision should be directed to undersigned at 571-272-1642.

/AMW/
April M. Wise
Petitions Examiner
Office of Petitions

cc: LEONID M. TERTITSKI
26188 HIGHWAY 9
LOS GATOS, CA 95033

UNITED STATES PATENT AND TRADEMARK OFFICE

Commissioner for Patents
United States Patent and Trademark Office
P.O. Box 1450
Alexandria, VA 22313-1450
www.uspto.gov

NORTH AMERICA INTELLECTUAL
PROPERTY CORPORATION
P.O. BOX 506
MERRIFIELD VA 22116

MAILED
JAN 27 2012
OFFICE OF PETITIONS

In re Patent No. 6,903,673 :
Issue Date: 7 June, 2005 :
Application No. 10/707,512 : DECISION
Filed: 19 December, 2003 :
Attorney Docket No. ACMP0125USA

This is a decision on the petition filed on 7 September, 2011, pursuant to 37 C.F.R. §1.27 requesting that fees be charged as previously authorized on 18 October, 2004, and about which Petitioner made inquiry also on 8 October, 2007, and is considered as a request for relief pursuant to pursuant to 37 C.F.R. §1.181 (no fee)

NOTE:

Petitioner apparently submitted to the Examiner amongst a collection of other papers an authorization for fees contemporaneously with an amendment in October 2004—only a few months in advance of allowance.

Petitioner sought to inquire to the Examiner some two years after issue as to why fees were not charged as authorized.

Petitioner might in the future direct such inquiries to the Office of Finance (with copies of the underlying papers) in order to obtain timely resolution.

This will allow such these matters to be addressed directly, rather than remaining unattended in a Technology Center/Art Unit after allowance and in a context in which an Examiner no longer has jurisdiction.

Petitioners have a duty of candor to the Office to properly inquire to ascertain the accuracy of representations made before the Office (*see*: 37 C.F.R. §1.4, §10.18, MPEP §410).

Patent No. 6,903,673
Application No. 10/707,512

Thus Petitioners always are reminded of the responsibility to review their records and submit accurate information to the Office.

Petitioner's submission is **DISMISSED as moot**.

Office records indicate that the fees in question already have been charged as authorized.

The availability of applications and application papers online to applicants/practitioners who diligently associate their Customer Number with the respective application(s) now provides an applicant/practitioner on-demand information as to events/transactions in an application.

Out of an abundance of caution, Petitioners always are reminded that that those registered to practice and all others who make representations before the Office **must** inquire into the underlying facts of representations made to the Office and support averments with the appropriate documentation–since all owe to the Office the continuing duty to disclose.[1]

The instant application is released to IFW Files Repository in due course.

Telephone inquiries regarding this decision may be directed to the undersigned at (571) 272-3214—it is noted, however, that all practice before the Office is in writing (see: 37 C.F.R. §1.2[2]) and the proper authority for action on any matter in this regard are the statutes (35 U.S.C.), regulations (37 C.F.R.) and the commentary on policy (MPEP). Therefore, no telephone discussion may be controlling or considered authority for Petitioner's action(s).

/John J. Gillon, Jr./
John J. Gillon, Jr.
Senior Attorney
Office of Petitions

---

[1] See supplement of 17 June, 1999. The Patent and Trademark Office is relying on Petitioner's duty of candor and good faith and accepting a statement made by Petitioner. See Changes to Patent Practice and Procedure, 62 Fed. Reg. at 53160 and 53178, 1203 Off. Gaz. Pat. Office at 88 and 103 (responses to comments 64 and 109)(applicant obligated under 37 C.F.R. §10.18 to inquire into the underlying facts and circumstances when providing statements to the Patent and Trademark Office).

[2] The regulations at 37 C.F.R. §1.2 provide:

§1.2 Business to be transacted in writing.

All business with the Patent and Trademark Office should be transacted in writing. The personal attendance of applicants or their attorneys or agents at the Patent and Trademark Office is unnecessary. The action of the Patent and Trademark Office will be based exclusively on the written record in the Office. No attention will be paid to any alleged oral promise, stipulation, or understanding in relation to which there is disagreement or doubt.

SPE RESPONSE FOR CERTIFICATE OF CORRECTION

Paper No.: _____

DATE : January 27, 2011

TO SPE OF : ART UNIT 2611

SUBJECT : Request for Certificate of Correction for Appl. No.: 10707588 Patent No.: 7573945

CofC mailroom date: Jan. 11, 2011

Please respond to this request for a certificate of correction within 7 days.

FOR IFW FILES:

Please review the requested changes/corrections as shown in the **COCIN** document(s) in the IFW application image. No new matter should be introduced, nor should the scope or meaning of the claims be changed.

Please complete the response (see below) and forward the completed response to scanning using document code **COCX**.

FOR PAPER FILES:

Please review the requested changes/corrections as shown in the attached certificate of correction. Please complete this form (see below) and forward it with the file to:

Certificates of Correction Branch (CofC)
Randolph Square – 9D10-A
Palm Location 7580

Certificates of Correction Branch

703-756-1814

Thank You For Your Assistance

The request for issuing the above-identified correction(s) is hereby:

Note your decision on the appropriate box.

- ☐ **Approved** — **All** changes apply.
- ☒ **Approved in Part** — Specify below which changes **do not** apply.
- ☐ **Denied** — State the reasons for denial below.

Comments: Deny the changes at section (63) & (60) Related US Application Data (no compliance with MPEP section 201.11 Rule 78)

All other changes are approved

Chris Mir Fan — 2611

SPE — **Art Unit**

UNITED STATES PATENT AND TRADEMARK OFFICE

Commissioner for Patents
United States Patent and Trademark Office
P.O. Box 1450
Alexandria, VA 22313-1450
www.uspto.gov

GEOFFREY E. DOBBIN, PATENT ATTORNEY
4278 SOUTH 6220 WEST
WEST VALLEY CITY UT 84128-6501

MAILED
JUL 13 2011
OFFICE OF PETITIONS

In re Patent No. 6,883,261 :
Issue Date: April 26, 2005 :
Application No. 10/707,643 : ON PETITION
Filed: December 23, 2003 :
Attorney Docket No. **GDRMF01R** :

This is a decision on the petition under 37 CFR 1.378(c), filed June 17, 2011, to accept the delayed payment of a maintenance fee for the above-identified patent.

The petition is hereby **DISMISSED**.

A petition under 37 CFR 1.378(c) must be filed within twenty-four months after the six month grace period specified in 35 USC 41(b). Petitioner has filed a petition to reinstate for the 3 ½ year payment. However, the patent issued on April 26, 2005 and the 3 ½ year payment was due on April 26, 2009. Therefore, the set forth period in 35 USC 41(b) for paying the 3 ½ year maintenance fee expired at midnight on April 26, 2009. Accordingly, an unintentional petition to reinstate the instant patent must have been submitted no later than April 26, 2011. As the instant petition was filed on June 17, 2011, it was not timely filed and the instant patent will not be reinstated under the unintentional provisions of 37 CFR 1.378(c).

35 U.S.C. § 41(c)(1) authorizes the Commissioner to accept a delayed maintenance fee payment within twenty-four (24) months after the expiration of the six-month grace period specified in 35 U.S.C. § 41(b) if the delay is shown to have been unintentional, and authorizes the Commissioner to accept a delayed maintenance fee payment at any time if the delay is shown to have been unavoidable. Thus, 35 U.S.C. § 41(c)(1) does not authorize the Commissioner to accept a delayed maintenance fee payment later than twenty-four (24) months after the expiration of the six-month grace period specified in 35 U.S.C. § 41(b) unless the delay is shown to have been unavoidable. Since

the instant petition was not filed within twenty-four (24) months after the expiration of the six-month grace period specified in 35 U.S.C. § 41(b), the Commissioner cannot accept a delayed maintenance fee payment for the above-identified patent under 37 CFR 1.378(c).

Maintenance fees are required to be paid to maintain a patent in force beyond 4, 8 and 12 years after the date of grant.

> The periods specified [above] with respect to a reissue application, including a continuing reissue application thereof, are counted from the date of grant of the original non-reissue application on which the reissued patent is based. ***See MPEP 2504 and 37 CFR 1.362(h)***.

Petitioner may wish to pursue reinstatement of the patent under the unavoidable provisions of 37 CFR 1.378(b). A petition to accept the delayed payment of a maintenance fee under 35 USC 41(c) and 37 CFR 1.378(b) must be accompanied by (1) an adequate, verified showing that the delay was unavoidable, since reasonable care was taken to insure that the maintenance fee would be paid timely and that the petition was filed promptly after the patentee was notified of, or otherwise became aware of, the expiration of the patent, (2) payment of the appropriate maintenance fee, unless previously submitted, and (3) payment of the surcharge set forth in 37 CFR 1.20(i)(1).

Further correspondence with respect to this matter should be addressed as follows:

By Mail: Mail Stop PETITION
Commissioner for Patents
Post Office Box 1450
Alexandria, VA 22313-1450

By hand: U. S. Patent and Trademark Office
Customer Service Window, Mail Stop Petitions
Randolph Building
401 Dulany Street
Alexandria, VA 22314

The centralized facsimile number is (571) 273-8300.

Telephone inquiries should be directed to the undersigned at (571) 272-4584.

JoAnne Burke
Petitions Examiner
Office of Petitions

PTO/SB/66 (03-09)
Approved for use through 03/31/2012. OMB 0651-0016
U.S. Patent and Trademark Office: U.S. DEPARTMENT OF COMMERCE
Under the Paperwork Reduction Act of 1995, no persons are required to respond to a collection of information unless it displays valid OMB control number.

PETITION TO ACCEPT UNINTENTIONALLY DELAYED PAYMENT OF MAINTENANCE FEE IN AN EXPIRED PATENT (37 CFR 1.378(c))

Patent Number	Issue Date (YYYY-MM-DD)	Application Number	Filing Date (YYYY-MM-DD)	Docket Number (if applicable)
7,164,177	2007-01-16	10/707,677	2004-01-02	LKSP0147USA

CAUTION: Maintenance fee (and surcharge, if any) payment must correctly identify: (1) the patent number and (2) the application number of the actual U.S. application leading to issuance of that patent to ensure the fee(s) is/are associated with the correct patent. 37 CFR 1.366(c) and (d).

SMALL ENTITY
☐ Patentee claims, or has previously claimed, small entity status. See 37 CFR 1.27.

LOSS OF ENTITLEMENT TO SMALL ENTITY STATUS
☐ Patentee is no longer entitled to small entity status. See 37 CFR 1.27(g)

NOT Small Entity			Small Entity		
	Fee	Code		Fee	Code
◉	3 ½ year	(1551)	○	3 ½ year	(2551)
○	7 ½ year	(1552)	○	7 ½ year	(2552)
○	11 ½ year	(1553)	○	11 ½ year	(2553)

SURCHARGE
The surcharge required by 37 CFR 1.20(i)(2) (Fee Code 1558) must be paid as a condition of accepting unintentionally delayed payment of the maintenance fee.

MAINTENANCE FEE (37 CFR 1.20(e)-(g))
The appropriate maintenance fee must be submitted with this petition.

STATEMENT
THE UNDERSIGNED CERTIFIES THAT THE DELAY IN PAYMENT OF THE MAINTENANCE FEE TO THIS PATENT WAS UNINTENTIONAL

PETITIONER(S) REQUEST THAT THE DELAYED PAYMENT OF THE MAINTENANCE FEE BE ACCEPTED AND THE PATENT REINSTATED

THIS PORTION MUST BE COMPLETED BY THE SIGNATORY OR SIGNATORIES

37 CFR 1.378(d) states: "Any petition under this section must be signed by an attorney or agent registered to practice before the Patent and Trademark Office, or by the patentee, the assignee, or other party in interest."

I certify, in accordance with 37 CFR 1.4(d)(4) that I am

◉ An attorney or agent registered to practice before the Patent and Trademark Office

○ A sole patentee

○ A joint patentee; I certify that I am authorized to sign this submission on behalf of all the other patentees.

○ A joint patentee; all of whom are signing this e-petition

○ The assignee of record of the entire interest

Under the Paperwork Reduction Act of 1995, no persons are required to respond to a collection of information unless it displays valid OMB control number.

Patent Practitioner			
A signature of the applicant or representative is required in accordance with 37 CFR 1.33 and 10.18. Please see 37 CFR 1.4(d) for the form of the signature			
Signature	/Winston Hsu/	Date (YYYY-MM-DD)	2012-04-05
Name	Winston Hsu	Registration Number	41526

This collection of information is required by 37 CFR 1.378(c). The information is required to obtain or retain a benefit by the public which is to file (and by the USPTO to process) an application. Confidentiality is governed by 35 U.S.C. 122 and 37 CFR 1.11 and 1.14. This collection is estimated to take 1 hour to complete, including gathering, preparing, and submitting the completed application form to the USPTO. Time will vary depending upon the individual case. Any comments on the amount of time you require to complete this form and/ or suggestions for reducing this burden, should be sent to the Chief Information Officer, U.S. Patent and Trademark Office, U.S. Department of Commerce, P.O. Box 1450, Alexandria, VA 22313-1450. DO NOT SEND FEES OR COMPLETED FORMS TO THIS ADDRESS. **This form can only be used when in conjunction with EFS-Web. If this form is mailed to the USPTO, it may cause delays in reinstating the patent.**

Privacy Act Statement

The Privacy Act of 1974 (P.L. 93-579) requires that you be given certain information in connection with your submission of the attached form related to a patent application or patent. Accordingly, pursuant to the requirements of the Act, please be advised that: (1) the general authority for the collection of this information is 35 U.S.C. 2(b)(2); (2) furnishing of the information solicited is voluntary; and (3) the principal purpose for which the information is used by the U.S. Patent and Trademark Office is to process and/or examine your submission related to a patent application or patent. If you do not furnish the requested information, the U.S. Patent and Trademark Office may not be able to process and/or examine your submission, which may result in termination of proceedings or abandonment of the application or expiration of the patent.

The information provided by you in this form will be subject to the following routine uses:

1. The information on this form will be treated confidentially to the extent allowed under the Freedom of Information Act (5 U.S.C. 552) and the Privacy Act (5 U.S.C. 552a). Records from this system of records may be disclosed to the Department of Justice to determine whether the Freedom of Information Act requires disclosure of these records.

2. A record from this system of records may be disclosed, as a routine use, in the course of presenting evidence to a court, magistrate, or administrative tribunal, including disclosures to opposing counsel in the course of settlement negotiations.

3. A record in this system of records may be disclosed, as a routine use, to a Member of Congress submitting a request involving an individual, to whom the record pertains, when the individual has requested assistance from the Member with respect to the subject matter of the record.

4. A record in this system of records may be disclosed, as a routine use, to a contractor of the Agency having need for the information in order to perform a contract. Recipients of information shall be required to comply with the requirements of the Privacy Act of 1974, as amended, pursuant to 5 U.S.C. 552a(m).

5. A record related to an International Application filed under the Patent Cooperation Treaty in this system of records may be disclosed, as a routine use, to the International Bureau of the World Intellectual Property Organization, pursuant to the Patent Cooperation Treaty.

6. A record in this system of records may be disclosed, as a routine use, to another federal agency for purposes of National Security review (35 U.S.C. 181) and for review pursuant to the Atomic Energy Act (42 U.S.C. 218(c)).

7. A record from this system of records may be disclosed, as a routine use, to the Administrator, General Services, or his/her designee, during an inspection of records conducted by GSA as part of that agency's responsibility to recommend improvements in records management practices and programs, under authority of 44 U.S.C. 2904 and 2906. Such disclosure shall be made in accordance with the GSA regulations governing inspection of records for this purpose, and any other relevant (i.e., GSA or Commerce) directive. Such disclosure shall not be used to make determinations about individuals.

8. A record from this system of records may be disclosed, as a routine use, to the public after either publication of the application pursuant to 35 U.S.C. 122(b) or issuance of a patent pursuant to 35 U.S.C. 151. Further, a record may be disclosed, subject to the limitations of 37 CFR 1.14, as a routine use, to the public if the record was filed in an application which became abandoned or in which the proceedings were terminated and which application is referenced by either a published application, an application open to public inspections or an issued patent.

9. A record from this system of records may be disclosed, as a routine use, to a Federal, State, or local law enforcement agency, if the USPTO becomes aware of a violation or potential violation of law or regulation.

UNITED STATES PATENT AND TRADEMARK OFFICE

Commissioner for Patents
United States Patent and Trademark Office
P.O. Box 1450
Alexandria, VA 22313-1450
www.uspto.gov

In re Patent No. 7164177
Issue Date: January 16,2007
Application No. 10707677
Filed: January 2,2004
Attorney Docket No. 12089-US-PA

:
:DECISION GRANTING PETITION
:UNDER 37 CFR 1.378(c)
:

This is a decision on the electronic petition, filed April 5,2012 ,under 37 CFR 1.378(c) to accept the unintentionally delayed payment of the 3.5 year maintenance fee for the above-identified patent.

The petition is **GRANTED**.

The maintenance fee is accepted, and the above-identified patent reinstated as of April 5,2012 . This decision also constitutes notice that the fee has been accepted. An electronic copy of the petition and this decision has been created as an entry in the Image File Wrapper. Nevertheless, petitioner should print and retain an independent copy.

Telephone inquiries related to this electronic decision should be directed to the Electronic Business Center at 1-866-217-9197.

PTO/SB/66 (03-09)
Approved for use through 03/31/2012. OMB 0651-0016
U.S. Patent and Trademark Office: U.S. DEPARTMENT OF COMMERCE
Under the Paperwork Reduction Act of 1995, no persons are required to respond to a collection of information unless it displays valid OMB control number.

PETITION TO ACCEPT UNINTENTIONALLY DELAYED PAYMENT OF MAINTENANCE FEE IN AN EXPIRED PATENT (37 CFR 1.378(c))

Patent Number	Issue Date (YYYY-MM-DD)	Application Number	Filing Date (YYYY-MM-DD)	Docket Number (if applicable)
7,091,550	2006-08-15	10/707,704	2004-01-06	LKSP0131USA

CAUTION: Maintenance fee (and surcharge, if any) payment must correctly identify: (1) the patent number and (2) the application number of the actual U.S. application leading to issuance of that patent to ensure the fee(s) is/are associated with the correct patent. 37 CFR 1.366(c) and (d).

SMALL ENTITY
☐ Patentee claims, or has previously claimed, small entity status. See 37 CFR 1.27.

LOSS OF ENTITLEMENT TO SMALL ENTITY STATUS
☐ Patentee is no longer entitled to small entity status. See 37 CFR 1.27(g)

NOT Small Entity			Small Entity		
	Fee	Code		Fee	Code
◉	3 ½ year	(1551)	○	3 ½ year	(2551)
○	7 ½ year	(1552)	○	7 ½ year	(2552)
○	11 ½ year	(1553)	○	11 ½ year	(2553)

SURCHARGE
The surcharge required by 37 CFR 1.20(i)(2) (Fee Code 1558) must be paid as a condition of accepting unintentionally delayed payment of the maintenance fee.

MAINTENANCE FEE (37 CFR 1.20(e)-(g))
The appropriate maintenance fee must be submitted with this petition.

STATEMENT
THE UNDERSIGNED CERTIFIES THAT THE DELAY IN PAYMENT OF THE MAINTENANCE FEE TO THIS PATENT WAS UNINTENTIONAL

PETITIONER(S) REQUEST THAT THE DELAYED PAYMENT OF THE MAINTENANCE FEE BE ACCEPTED AND THE PATENT REINSTATED

THIS PORTION MUST BE COMPLETED BY THE SIGNATORY OR SIGNATORIES

37 CFR 1.378(d) states: "Any petition under this section must be signed by an attorney or agent registered to practice before the Patent and Trademark Office, or by the patentee, the assignee, or other party in interest."

I certify, in accordance with 37 CFR 1.4(d)(4) that I am

◉ An attorney or agent registered to practice before the Patent and Trademark Office

○ A sole patentee

○ A joint patentee; I certify that I am authorized to sign this submission on behalf of all the other patentees.

○ A joint patentee; all of whom are signing this e-petition

○ The assignee of record of the entire interest

Under the Paperwork Reduction Act of 1995, no persons are required to respond to a collection of information unless it displays valid OMB control number.

Patent Practitioner			
A signature of the applicant or representative is required in accordance with 37 CFR 1.33 and 10.18. Please see 37 CFR 1.4(d) for the form of the signature			
Signature	/Winston Hsu/	Date (YYYY-MM-DD)	2012-04-06
Name	Winston Hsu	Registration Number	41526

This collection of information is required by 37 CFR 1.378(c). The information is required to obtain or retain a benefit by the public which is to file (and by the USPTO to process) an application. Confidentiality is governed by 35 U.S.C. 122 and 37 CFR 1.11 and 1.14. This collection is estimated to take 1 hour to complete, including gathering, preparing, and submitting the completed application form to the USPTO. Time will vary depending upon the individual case. Any comments on the amount of time you require to complete this form and/ or suggestions for reducing this burden, should be sent to the Chief Information Officer, U.S. Patent and Trademark Office, U.S. Department of Commerce, P.O. Box 1450, Alexandria, VA 22313-1450. DO NOT SEND FEES OR COMPLETED FORMS TO THIS ADDRESS. **This form can only be used when in conjunction with EFS-Web. If this form is mailed to the USPTO, it may cause delays in reinstating the patent.**

Privacy Act Statement

The Privacy Act of 1974 (P.L. 93-579) requires that you be given certain information in connection with your submission of the attached form related to a patent application or patent. Accordingly, pursuant to the requirements of the Act, please be advised that: (1) the general authority for the collection of this information is 35 U.S.C. 2(b)(2); (2) furnishing of the information solicited is voluntary; and (3) the principal purpose for which the information is used by the U.S. Patent and Trademark Office is to process and/or examine your submission related to a patent application or patent. If you do not furnish the requested information, the U.S. Patent and Trademark Office may not be able to process and/or examine your submission, which may result in termination of proceedings or abandonment of the application or expiration of the patent.

The information provided by you in this form will be subject to the following routine uses:

1. The information on this form will be treated confidentially to the extent allowed under the Freedom of Information Act (5 U.S.C. 552) and the Privacy Act (5 U.S.C. 552a). Records from this system of records may be disclosed to the Department of Justice to determine whether the Freedom of Information Act requires disclosure of these records.

2. A record from this system of records may be disclosed, as a routine use, in the course of presenting evidence to a court, magistrate, or administrative tribunal, including disclosures to opposing counsel in the course of settlement negotiations.

3. A record in this system of records may be disclosed, as a routine use, to a Member of Congress submitting a request involving an individual, to whom the record pertains, when the individual has requested assistance from the Member with respect to the subject matter of the record.

4. A record in this system of records may be disclosed, as a routine use, to a contractor of the Agency having need for the information in order to perform a contract. Recipients of information shall be required to comply with the requirements of the Privacy Act of 1974, as amended, pursuant to 5 U.S.C. 552a(m).

5. A record related to an International Application filed under the Patent Cooperation Treaty in this system of records may be disclosed, as a routine use, to the International Bureau of the World Intellectual Property Organization, pursuant to the Patent Cooperation Treaty.

6. A record in this system of records may be disclosed, as a routine use, to another federal agency for purposes of National Security review (35 U.S.C. 181) and for review pursuant to the Atomic Energy Act (42 U.S.C. 218(c)).

7. A record from this system of records may be disclosed, as a routine use, to the Administrator, General Services, or his/her designee, during an inspection of records conducted by GSA as part of that agency's responsibility to recommend improvements in records management practices and programs, under authority of 44 U.S.C. 2904 and 2906. Such disclosure shall be made in accordance with the GSA regulations governing inspection of records for this purpose, and any other relevant (i.e., GSA or Commerce) directive. Such disclosure shall not be used to make determinations about individuals.

8. A record from this system of records may be disclosed, as a routine use, to the public after either publication of the application pursuant to 35 U.S.C. 122(b) or issuance of a patent pursuant to 35 U.S.C. 151. Further, a record may be disclosed, subject to the limitations of 37 CFR 1.14, as a routine use, to the public if the record was filed in an application which became abandoned or in which the proceedings were terminated and which application is referenced by either a published application, an application open to public inspections or an issued patent.

9. A record from this system of records may be disclosed, as a routine use, to a Federal, State, or local law enforcement agency, if the USPTO becomes aware of a violation or potential violation of law or regulation.

UNITED STATES PATENT AND TRADEMARK OFFICE

Commissioner for Patents
United States Patent and Trademark Office
P.O. Box 1450
Alexandria, VA 22313-1450
www.uspto.gov

In re Patent No. 7091550
Issue Date: August 15,2006
Application No. 10707704
Filed: January 6,2004
Attorney Docket No. 11964-US-PA

:
:DECISION GRANTING PETITION
:UNDER 37 CFR 1.378(c)
:

This is a decision on the electronic petition, filed April 6,2012 ,under 37 CFR 1.378(c) to accept the unintentionally delayed payment of the 3.5 year maintenance fee for the above-identified patent.

The petition is **GRANTED**.

The maintenance fee is accepted, and the above-identified patent reinstated as of April 6,2012 . This decision also constitutes notice that the fee has been accepted. An electronic copy of the petition and this decision has been created as an entry in the Image File Wrapper. Nevertheless, petitioner should print and retain an independent copy.

Telephone inquiries related to this electronic decision should be directed to the Electronic Business Center at 1-866-217-9197.

PTO/SB/66 (03-09)
Approved for use through 03/31/2012. OMB 0651-0016
U.S. Patent and Trademark Office: U.S. DEPARTMENT OF COMMERCE
Under the Paperwork Reduction Act of 1995, no persons are required to respond to a collection of information unless it displays valid OMB control number.

PETITION TO ACCEPT UNINTENTIONALLY DELAYED PAYMENT OF MAINTENANCE FEE IN AN EXPIRED PATENT (37 CFR 1.378(c))

Patent Number	Issue Date (YYYY-MM-DD)	Application Number	Filing Date (YYYY-MM-DD)	Docket Number (if applicable)
7111603	2006-09-26	10707783	2004-01-12	

CAUTION: Maintenance fee (and surcharge, if any) payment must correctly identify: (1) the patent number and (2) the application number of the actual U.S. application leading to issuance of that patent to ensure the fee(s) is/are associated with the correct patent. 37 CFR 1.366(c) and (d).

SMALL ENTITY
☒ Patentee claims, or has previously claimed, small entity status. See 37 CFR 1.27.

LOSS OF ENTITLEMENT TO SMALL ENTITY STATUS
☐ Patentee is no longer entitled to small entity status. See 37 CFR 1.27(g)

NOT Small Entity		Small Entity	
Fee	Code	Fee	Code
○ 3 ½ year	(1551)	◉ 3 ½ year	(2551)
○ 7 ½ year	(1552)	○ 7 ½ year	(2552)
○ 11 ½ year	(1553)	○ 11 ½ year	(2553)

SURCHARGE
The surcharge required by 37 CFR 1.20(i)(2) (Fee Code 1558) must be paid as a condition of accepting unintentionally delayed payment of the maintenance fee.

MAINTENANCE FEE (37 CFR 1.20(e)-(g))
The appropriate maintenance fee must be submitted with this petition.

STATEMENT
THE UNDERSIGNED CERTIFIES THAT THE DELAY IN PAYMENT OF THE MAINTENANCE FEE TO THIS PATENT WAS UNINTENTIONAL

PETITIONER(S) REQUEST THAT THE DELAYED PAYMENT OF THE MAINTENANCE FEE BE ACCEPTED AND THE PATENT REINSTATED

THIS PORTION MUST BE COMPLETED BY THE SIGNATORY OR SIGNATORIES

37 CFR 1.378(d) states: "Any petition under this section must be signed by an attorney or agent registered to practice before the Patent and Trademark Office, or by the patentee, the assignee, or other party in interest."

I certify, in accordance with 37 CFR 1.4(d)(4) that I am

○ An attorney or agent registered to practice before the Patent and Trademark Office

◉ A sole patentee

○ A joint patentee; I certify that I am authorized to sign this submission on behalf of all the other patentees.

○ A joint patentee; all of whom are signing this e-petition

○ The assignee of record of the entire interest

Under the Paperwork Reduction Act of 1995, no persons are required to respond to a collection of information unless it displays valid OMB control number.

Sole Patentee			
A signature of the applicant or representative is required in accordance with 37 CFR 1.33 and 10.18. Please see 37 CFR 1.4(d) for the form of the signature.			
Signature	/KMD/	Date (YYYY-MM-DD)	2010-12-09
Name	Kenneth Michael Davis		

This collection of information is required by 37 CFR 1.378(c). The information is required to obtain or retain a benefit by the public which is to file (and by the USPTO to process) an application. Confidentiality is governed by 35 U.S.C. 122 and 37 CFR 1.11 and 1.14. This collection is estimated to take 1 hour to complete, including gathering, preparing, and submitting the completed application form to the USPTO. Time will vary depending upon the individual case. Any comments on the amount of time you require to complete this form and/ or suggestions for reducing this burden, should be sent to the Chief Information Officer, U.S. Patent and Trademark Office, U.S. Department of Commerce, P.O. Box 1450, Alexandria, VA 22313-1450. DO NOT SEND FEES OR COMPLETED FORMS TO THIS ADDRESS. **This form can only be used when in conjunction with EFS-Web. If this form is mailed to the USPTO, it may cause delays in reinstating the patent.**

Privacy Act Statement

The Privacy Act of 1974 (P.L. 93-579) requires that you be given certain information in connection with your submission of the attached form related to a patent application or patent. Accordingly, pursuant to the requirements of the Act, please be advised that: (1) the general authority for the collection of this information is 35 U.S.C. 2(b)(2); (2) furnishing of the information solicited is voluntary; and (3) the principal purpose for which the information is used by the U.S. Patent and Trademark Office is to process and/or examine your submission related to a patent application or patent. If you do not furnish the requested information, the U.S. Patent and Trademark Office may not be able to process and/or examine your submission, which may result in termination of proceedings or abandonment of the application or expiration of the patent.

The information provided by you in this form will be subject to the following routine uses:

1. The information on this form will be treated confidentially to the extent allowed under the Freedom of Information Act (5 U.S.C. 552) and the Privacy Act (5 U.S.C. 552a). Records from this system of records may be disclosed to the Department of Justice to determine whether the Freedom of Information Act requires disclosure of these records.

2. A record from this system of records may be disclosed, as a routine use, in the course of presenting evidence to a court, magistrate, or administrative tribunal, including disclosures to opposing counsel in the course of settlement negotiations.

3. A record in this system of records may be disclosed, as a routine use, to a Member of Congress submitting a request involving an individual, to whom the record pertains, when the individual has requested assistance from the Member with respect to the subject matter of the record.

4. A record in this system of records may be disclosed, as a routine use, to a contractor of the Agency having need for the information in order to perform a contract. Recipients of information shall be required to comply with the requirements of the Privacy Act of 1974, as amended, pursuant to 5 U.S.C. 552a(m).

5. A record related to an International Application filed under the Patent Cooperation Treaty in this system of records may be disclosed, as a routine use, to the International Bureau of the World Intellectual Property Organization, pursuant to the Patent Cooperation Treaty.

6. A record in this system of records may be disclosed, as a routine use, to another federal agency for purposes of National Security review (35 U.S.C. 181) and for review pursuant to the Atomic Energy Act (42 U.S.C. 218(c)).

7. A record from this system of records may be disclosed, as a routine use, to the Administrator, General Services, or his/her designee, during an inspection of records conducted by GSA as part of that agency's responsibility to recommend improvements in records management practices and programs, under authority of 44 U.S.C. 2904 and 2906. Such disclosure shall be made in accordance with the GSA regulations governing inspection of records for this purpose, and any other relevant (i.e., GSA or Commerce) directive. Such disclosure shall not be used to make determinations about individuals.

8. A record from this system of records may be disclosed, as a routine use, to the public after either publication of the application pursuant to 35 U.S.C. 122(b) or issuance of a patent pursuant to 35 U.S.C. 151. Further, a record may be disclosed, subject to the limitations of 37 CFR 1.14, as a routine use, to the public if the record was filed in an application which became abandoned or in which the proceedings were terminated and which application is referenced by either a published application, an application open to public inspections or an issued patent.

9. A record from this system of records may be disclosed, as a routine use, to a Federal, State, or local law enforcement agency, if the USPTO becomes aware of a violation or potential violation of law or regulation.

UNITED STATES PATENT AND TRADEMARK OFFICE

Commissioner for Patents
United States Patent and Trademark Office
P.O. Box 1450
Alexandria, VA 22313-1450
www.uspto.gov

In re Patent No. 7111603
Issue Date: September 26,2006
Application No. 10707783
Filed: January 12,2004
Attorney Docket No.

:
:DECISION GRANTING PETITION
:UNDER 37 CFR 1.378(c)
:

This is a decision on the electronic petition, filed December 9,2010 ,under 37 CFR 1.378(c) to accept the unintentionally delayed payment of the 3.5 year maintenance fee for the above-identified patent.

The petition is **GRANTED**.

The maintenance fee is accepted, and the above-identified patent reinstated as of December 9,2010 .
This decision also constitutes notice that the fee has been accepted. An electronic copy of the petition and this decision has been created as an entry in the Image File Wrapper. Nevertheless, petitioner should print and retain an independent copy.

Telephone inquiries related to this electronic decision should be directed to the Electronic Business Center at 1-866-217-9197.

UNITED STATES PATENT AND TRADEMARK OFFICE

Commissioner for Patents
United States Patent and Trademark Office
P.O. Box 1450
Alexandria, VA 22313-1450
www.uspto.gov

CALFEE HALTER & GRISWOLD, LLP
800 SUPERIOR AVENUE
SUITE 1400
CLEVELAND OH 44114

MAILED
SEP 22 2011
OFFICE OF PETITIONS

In re Patent No. 7,108,497 :
Issue Date: September 19, 2006 :
Application No. 10/707,784 :
Filed: January 12, 2004 :
Attorney Docket No. 23093/04006 :

ON PETITION

This is a decision on the petition under 37 CFR 1.378(c), filed September 2, 2011, to accept the unintentionally delayed payment of a maintenance fee for the above-identified patent.

The petition is **GRANTED**.

This patent expired on September 20, 2010 for failure to pay the 3.5 year maintenance fee. Since this petition was submitted within twenty-four months after the six-month grace period provided in 37 CFR 1.362(e), the petition was timely filed under the provisions of 37 CFR 1.378(c).

It is not apparent whether the person signing the statement of unintentional delay was in a position to have firsthand or direct knowledge of the facts and circumstances of the delay at issue. Nevertheless, such statement is being treated as having been made as a result of a reasonable inquiry into the facts and circumstances of such delay. In the event that such an inquiry has not been made, petitioner must make such an inquiry. If such an inquiry results in the discovery that the delay in paying the maintenance fee under 37 CFR 1.378(c) was intentional, petitioner must notify the Office.

The address on the petition differs from the correspondence address of record a courtesy copy of this decision is being provided. All future correspondence will be addressed to the correspondence address of record.

The maintenance fee is hereby accepted and the above-identified patent is reinstated as of the mail date of this decision.

Telephone inquiries concerning this decision should be directed to the undersigned at (571) 272-3215.

Charlema Grant
Petitions Attorney
Office of Petitions

Cc: Angelo Bufalino
Vedder Price P.C.
222 North LaSalle Street-24th Floor
Chicago, Il 60601

PTO/SB/66 (03-09)
Approved for use through 03/31/2012. OMB 0651-0016
U.S. Patent and Trademark Office: U.S. DEPARTMENT OF COMMERCE
Under the Paperwork Reduction Act of 1995, no persons are required to respond to a collection of information unless it displays valid OMB control number.

PETITION TO ACCEPT UNINTENTIONALLY DELAYED PAYMENT OF MAINTENANCE FEE IN AN EXPIRED PATENT (37 CFR 1.378(c))

Patent Number	Issue Date (YYYY-MM-DD)	Application Number	Filing Date (YYYY-MM-DD)	Docket Number (if applicable)
7,071,011	2006-07-04	10/707,824	2004-01-15	LKSP0029USA

CAUTION: Maintenance fee (and surcharge, if any) payment must correctly identify: (1) the patent number and (2) the application number of the actual U.S. application leading to issuance of that patent to ensure the fee(s) is/are associated with the correct patent. 37 CFR 1.366(c) and (d).

SMALL ENTITY
☐ Patentee claims, or has previously claimed, small entity status. See 37 CFR 1.27.

LOSS OF ENTITLEMENT TO SMALL ENTITY STATUS
☐ Patentee is no longer entitled to small entity status. See 37 CFR 1.27(g)

NOT Small Entity			Small Entity		
	Fee	Code		Fee	Code
◉	3 ½ year	(1551)	○	3 ½ year	(2551)
○	7 ½ year	(1552)	○	7 ½ year	(2552)
○	11 ½ year	(1553)	○	11 ½ year	(2553)

SURCHARGE
The surcharge required by 37 CFR 1.20(i)(2) (Fee Code 1558) must be paid as a condition of accepting unintentionally delayed payment of the maintenance fee.

MAINTENANCE FEE (37 CFR 1.20(e)-(g))
The appropriate maintenance fee must be submitted with this petition.

STATEMENT
THE UNDERSIGNED CERTIFIES THAT THE DELAY IN PAYMENT OF THE MAINTENANCE FEE TO THIS PATENT WAS UNINTENTIONAL

PETITIONER(S) REQUEST THAT THE DELAYED PAYMENT OF THE MAINTENANCE FEE BE ACCEPTED AND THE PATENT REINSTATED

THIS PORTION MUST BE COMPLETED BY THE SIGNATORY OR SIGNATORIES

37 CFR 1.378(d) states: "Any petition under this section must be signed by an attorney or agent registered to practice before the Patent and Trademark Office, or by the patentee, the assignee, or other party in interest."

I certify, in accordance with 37 CFR 1.4(d)(4) that I am

◉ An attorney or agent registered to practice before the Patent and Trademark Office

○ A sole patentee

○ A joint patentee; I certify that I am authorized to sign this submission on behalf of all the other patentees.

○ A joint patentee; all of whom are signing this e-petition

○ The assignee of record of the entire interest

Under the Paperwork Reduction Act of 1995, no persons are required to respond to a collection of information unless it displays valid OMB control number.

Patent Practitioner			
A signature of the applicant or representative is required in accordance with 37 CFR 1.33 and 10.18. Please see 37 CFR 1.4(d) for the form of the signature			
Signature	/Winston Hsu/	Date (YYYY-MM-DD)	2012-04-05
Name	Winston Hsu	Registration Number	41526

This collection of information is required by 37 CFR 1.378(c). The information is required to obtain or retain a benefit by the public which is to file (and by the USPTO to process) an application. Confidentiality is governed by 35 U.S.C. 122 and 37 CFR 1.11 and 1.14. This collection is estimated to take 1 hour to complete, including gathering, preparing, and submitting the completed application form to the USPTO. Time will vary depending upon the individual case. Any comments on the amount of time you require to complete this form and/ or suggestions for reducing this burden, should be sent to the Chief Information Officer, U.S. Patent and Trademark Office, U.S. Department of Commerce, P.O. Box 1450, Alexandria, VA 22313-1450. DO NOT SEND FEES OR COMPLETED FORMS TO THIS ADDRESS. **This form can only be used when in conjunction with EFS-Web. If this form is mailed to the USPTO, it may cause delays in reinstating the patent.**

Privacy Act Statement

The Privacy Act of 1974 (P.L. 93-579) requires that you be given certain information in connection with your submission of the attached form related to a patent application or patent. Accordingly, pursuant to the requirements of the Act, please be advised that: (1) the general authority for the collection of this information is 35 U.S.C. 2(b)(2); (2) furnishing of the information solicited is voluntary; and (3) the principal purpose for which the information is used by the U.S. Patent and Trademark Office is to process and/or examine your submission related to a patent application or patent. If you do not furnish the requested information, the U.S. Patent and Trademark Office may not be able to process and/or examine your submission, which may result in termination of proceedings or abandonment of the application or expiration of the patent.

The information provided by you in this form will be subject to the following routine uses:

1. The information on this form will be treated confidentially to the extent allowed under the Freedom of Information Act (5 U.S.C. 552) and the Privacy Act (5 U.S.C. 552a). Records from this system of records may be disclosed to the Department of Justice to determine whether the Freedom of Information Act requires disclosure of these records.

2. A record from this system of records may be disclosed, as a routine use, in the course of presenting evidence to a court, magistrate, or administrative tribunal, including disclosures to opposing counsel in the course of settlement negotiations.

3. A record in this system of records may be disclosed, as a routine use, to a Member of Congress submitting a request involving an individual, to whom the record pertains, when the individual has requested assistance from the Member with respect to the subject matter of the record.

4. A record in this system of records may be disclosed, as a routine use, to a contractor of the Agency having need for the information in order to perform a contract. Recipients of information shall be required to comply with the requirements of the Privacy Act of 1974, as amended, pursuant to 5 U.S.C. 552a(m).

5. A record related to an International Application filed under the Patent Cooperation Treaty in this system of records may be disclosed, as a routine use, to the International Bureau of the World Intellectual Property Organization, pursuant to the Patent Cooperation Treaty.

6. A record in this system of records may be disclosed, as a routine use, to another federal agency for purposes of National Security review (35 U.S.C. 181) and for review pursuant to the Atomic Energy Act (42 U.S.C. 218(c)).

7. A record from this system of records may be disclosed, as a routine use, to the Administrator, General Services, or his/her designee, during an inspection of records conducted by GSA as part of that agency's responsibility to recommend improvements in records management practices and programs, under authority of 44 U.S.C. 2904 and 2906. Such disclosure shall be made in accordance with the GSA regulations governing inspection of records for this purpose, and any other relevant (i.e., GSA or Commerce) directive. Such disclosure shall not be used to make determinations about individuals.

8. A record from this system of records may be disclosed, as a routine use, to the public after either publication of the application pursuant to 35 U.S.C. 122(b) or issuance of a patent pursuant to 35 U.S.C. 151. Further, a record may be disclosed, subject to the limitations of 37 CFR 1.14, as a routine use, to the public if the record was filed in an application which became abandoned or in which the proceedings were terminated and which application is referenced by either a published application, an application open to public inspections or an issued patent.

9. A record from this system of records may be disclosed, as a routine use, to a Federal, State, or local law enforcement agency, if the USPTO becomes aware of a violation or potential violation of law or regulation.

UNITED STATES PATENT AND TRADEMARK OFFICE

Commissioner for Patents
United States Patent and Trademark Office
P.O. Box 1450
Alexandria, VA 22313-1450
www.uspto.gov

In re Patent No. 7071011
Issue Date: July 4,2006
Application No. 10707824
Filed: January 15,2004
Attorney Docket No. LKSP0029USA

:
:DECISION GRANTING PETITION
:UNDER 37 CFR 1.378(c)
:

This is a decision on the electronic petition, filed April 5,2012 ,under 37 CFR 1.378(c) to accept the unintentionally delayed payment of the 3.5 year maintenance fee for the above-identified patent.

The petition is **GRANTED**.

The maintenance fee is accepted, and the above-identified patent reinstated as of April 5,2012 .
This decision also constitutes notice that the fee has been accepted. An electronic copy of the petition and this decision has been created as an entry in the Image File Wrapper. Nevertheless, petitioner should print and retain an independent copy.

Telephone inquiries related to this electronic decision should be directed to the Electronic Business Center at 1-866-217-9197.

PTO/SB/66 (03-09)
Approved for use through 03/31/2012. OMB 0651-0016
U.S. Patent and Trademark Office: U.S. DEPARTMENT OF COMMERCE
Under the Paperwork Reduction Act of 1995, no persons are required to respond to a collection of information unless it displays valid OMB control number.

PETITION TO ACCEPT UNINTENTIONALLY DELAYED PAYMENT OF MAINTENANCE FEE IN AN EXPIRED PATENT (37 CFR 1.378(c))

Patent Number	Issue Date (YYYY-MM-DD)	Application Number	Filing Date (YYYY-MM-DD)	Docket Number (if applicable)
7,005,699	2006-02-28	10/707,826	2004-01-15	LKSP0168USA

CAUTION: Maintenance fee (and surcharge, if any) payment must correctly identify: (1) the patent number and (2) the application number of the actual U.S. application leading to issuance of that patent to ensure the fee(s) is/are associated with the correct patent. 37 CFR 1.366(c) and (d).

SMALL ENTITY
☐ Patentee claims, or has previously claimed, small entity status. See 37 CFR 1.27.

LOSS OF ENTITLEMENT TO SMALL ENTITY STATUS
☐ Patentee is no longer entitled to small entity status. See 37 CFR 1.27(g)

NOT Small Entity			Small Entity		
	Fee	Code		Fee	Code
◉	3 ½ year	(1551)	○	3 ½ year	(2551)
○	7 ½ year	(1552)	○	7 ½ year	(2552)
○	11 ½ year	(1553)	○	11 ½ year	(2553)

SURCHARGE
The surcharge required by 37 CFR 1.20(i)(2) (Fee Code 1558) must be paid as a condition of accepting unintentionally delayed payment of the maintenance fee.

MAINTENANCE FEE (37 CFR 1.20(e)-(g))
The appropriate maintenance fee must be submitted with this petition.

STATEMENT
THE UNDERSIGNED CERTIFIES THAT THE DELAY IN PAYMENT OF THE MAINTENANCE FEE TO THIS PATENT WAS UNINTENTIONAL

PETITIONER(S) REQUEST THAT THE DELAYED PAYMENT OF THE MAINTENANCE FEE BE ACCEPTED AND THE PATENT REINSTATED

THIS PORTION MUST BE COMPLETED BY THE SIGNATORY OR SIGNATORIES

37 CFR 1.378(d) states: "Any petition under this section must be signed by an attorney or agent registered to practice before the Patent and Trademark Office, or by the patentee, the assignee, or other party in interest."

I certify, in accordance with 37 CFR 1.4(d)(4) that I am

◉ An attorney or agent registered to practice before the Patent and Trademark Office

○ A sole patentee

○ A joint patentee; I certify that I am authorized to sign this submission on behalf of all the other patentees.

○ A joint patentee; all of whom are signing this e-petition

○ The assignee of record of the entire interest

Under the Paperwork Reduction Act of 1995, no persons are required to respond to a collection of information unless it displays valid OMB control number.

Patent Practitioner			
A signature of the applicant or representative is required in accordance with 37 CFR 1.33 and 10.18. Please see 37 CFR 1.4(d) for the form of the signature			
Signature	/Winston Hsu/	Date (YYYY-MM-DD)	2012-02-04
Name	Winston Hsu	Registration Number	41526

This collection of information is required by 37 CFR 1.378(c). The information is required to obtain or retain a benefit by the public which is to file (and by the USPTO to process) an application. Confidentiality is governed by 35 U.S.C. 122 and 37 CFR 1.11 and 1.14. This collection is estimated to take 1 hour to complete, including gathering, preparing, and submitting the completed application form to the USPTO. Time will vary depending upon the individual case. Any comments on the amount of time you require to complete this form and/ or suggestions for reducing this burden, should be sent to the Chief Information Officer, U.S. Patent and Trademark Office, U.S. Department of Commerce, P.O. Box 1450, Alexandria, VA 22313-1450. DO NOT SEND FEES OR COMPLETED FORMS TO THIS ADDRESS. **This form can only be used when in conjunction with EFS-Web. If this form is mailed to the USPTO, it may cause delays in reinstating the patent.**

Privacy Act Statement

The Privacy Act of 1974 (P.L. 93-579) requires that you be given certain information in connection with your submission of the attached form related to a patent application or patent. Accordingly, pursuant to the requirements of the Act, please be advised that: (1) the general authority for the collection of this information is 35 U.S.C. 2(b)(2); (2) furnishing of the information solicited is voluntary; and (3) the principal purpose for which the information is used by the U.S. Patent and Trademark Office is to process and/or examine your submission related to a patent application or patent. If you do not furnish the requested information, the U.S. Patent and Trademark Office may not be able to process and/or examine your submission, which may result in termination of proceedings or abandonment of the application or expiration of the patent.

The information provided by you in this form will be subject to the following routine uses:

1. The information on this form will be treated confidentially to the extent allowed under the Freedom of Information Act (5 U.S.C. 552) and the Privacy Act (5 U.S.C. 552a). Records from this system of records may be disclosed to the Department of Justice to determine whether the Freedom of Information Act requires disclosure of these records.

2. A record from this system of records may be disclosed, as a routine use, in the course of presenting evidence to a court, magistrate, or administrative tribunal, including disclosures to opposing counsel in the course of settlement negotiations.

3. A record in this system of records may be disclosed, as a routine use, to a Member of Congress submitting a request involving an individual, to whom the record pertains, when the individual has requested assistance from the Member with respect to the subject matter of the record.

4. A record in this system of records may be disclosed, as a routine use, to a contractor of the Agency having need for the information in order to perform a contract. Recipients of information shall be required to comply with the requirements of the Privacy Act of 1974, as amended, pursuant to 5 U.S.C. 552a(m).

5. A record related to an International Application filed under the Patent Cooperation Treaty in this system of records may be disclosed, as a routine use, to the International Bureau of the World Intellectual Property Organization, pursuant to the Patent Cooperation Treaty.

6. A record in this system of records may be disclosed, as a routine use, to another federal agency for purposes of National Security review (35 U.S.C. 181) and for review pursuant to the Atomic Energy Act (42 U.S.C. 218(c)).

7. A record from this system of records may be disclosed, as a routine use, to the Administrator, General Services, or his/her designee, during an inspection of records conducted by GSA as part of that agency's responsibility to recommend improvements in records management practices and programs, under authority of 44 U.S.C. 2904 and 2906. Such disclosure shall be made in accordance with the GSA regulations governing inspection of records for this purpose, and any other relevant (i.e., GSA or Commerce) directive. Such disclosure shall not be used to make determinations about individuals.

8. A record from this system of records may be disclosed, as a routine use, to the public after either publication of the application pursuant to 35 U.S.C. 122(b) or issuance of a patent pursuant to 35 U.S.C. 151. Further, a record may be disclosed, subject to the limitations of 37 CFR 1.14, as a routine use, to the public if the record was filed in an application which became abandoned or in which the proceedings were terminated and which application is referenced by either a published application, an application open to public inspections or an issued patent.

9. A record from this system of records may be disclosed, as a routine use, to a Federal, State, or local law enforcement agency, if the USPTO becomes aware of a violation or potential violation of law or regulation.

UNITED STATES PATENT AND TRADEMARK OFFICE

Commissioner for Patents
United States Patent and Trademark Office
P.O. Box 1450
Alexandria, VA 22313-1450
www.uspto.gov

In re Patent No. 7005699
Issue Date: February 28,2006
Application No. 10707826
Filed: January 15,2004
Attorney Docket No. 12090-US-PA

:
:DECISION GRANTING PETITION
:UNDER 37 CFR 1.378(c)
:

This is a decision on the electronic petition, filed February 4,2012 ,under 37 CFR 1.378(c) to accept the unintentionally delayed payment of the 3.5 year maintenance fee for the above-identified patent.

The petition is **GRANTED**.

The maintenance fee is accepted, and the above-identified patent reinstated as of February 4,2012 . This decision also constitutes notice that the fee has been accepted. An electronic copy of the petition and this decision has been created as an entry in the Image File Wrapper. Nevertheless, petitioner should print and retain an independent copy.

Telephone inquiries related to this electronic decision should be directed to the Electronic Business Center at 1-866-217-9197.

UNITED STATES PATENT AND TRADEMARK OFFICE

Commissioner for Patents
United States Patent and Trademark Office
P.O. Box 1450
Alexandria, VA 22313-1450
www.uspto.gov

THOMAS, KAYDEN, HORSTEMEYER & RISLEY, LLP
600 GALLERIA PARKWAY, S.E.
STE 1500
ATLANTA GA 30339-5994

MAILED
MAR 09 2011
OFFICE OF PETITIONS

In re Application of :
Yung-Chieh Lo et al. :
Application No. 10/708,027 : ON PETITION
Filed: February 3, 2004 :
Attorney Docket No: 251812-1220 :

This is a decision on the petition filed February 8, 2011 under 37 CFR 1.137(b),[1] to revive the above-identified application.

The petition is **GRANTED**.

This application became abandoned for failure to timely reply to the non-Final Office Action mailed July 7, 2010. A shortened statutory period of three months was set for replying to the non-Final Office Action. No response having been timely filed, this application became abandoned October 8, 2010. Accordingly, a Notice of Abandonment was mailed February 4, 2011.

This matter is being referred to Technology Center 2465 for appropriate action on the amendment filed February 8, 2011.

Telephone inquiries concerning this matter should be directed to the undersigned Petitions Attorney at (571) 272-3212.

Patricia Faison-Ball
Senior Petitions Attorney
Office of Petitions

---

[1]Effective December 1, 1997, the provisions of 37 CFR 1.137(b) now provide that where the delay in reply was unintentional, a petition may be filed to revive an abandoned application or a lapsed patent pursuant to 37 CFR 1.137(b). A grantable petition filed under the provisions of 37 CFR 1.137(b) must be accompanied by:

(1) the required reply, unless previously filed. In a nonprovisional application abandoned for failure to prosecute, the required reply may be met by the filing of a continuing application. In a nonprovisional application filed on or after June 8, 1995, and abandoned for failure to prosecute, the required reply may also be met by the filing of a request for continued examination in compliance with § 1.114. In an application or patent, abandoned or lapsed for failure to pay the issue fee or any portion thereof, the required reply must be the payment of the issue fee or any outstanding balance thereof. In an application abandoned for failure to pay the publication fee, the required reply must include payment of the publication fee.

(2) the petition fee as set forth in 37 CFR 1.17(m);

(3) a statement that the entire delay in filing the required reply from the due date for the reply until the filing of a grantable petition pursuant to 37 CFR 1.137(b) was unintentional. The Commissioner may required additional information where there is a question whether the delay was unintentional; and

(4) any terminal disclaimer (and fee as set forth in 37 CFR 1.20(d)) required pursuant to 37 CFR 1.137(c)).

PTO/SB/66 (03-09)
Approved for use through 03/31/2012. OMB 0651-0016
U.S. Patent and Trademark Office: U.S. DEPARTMENT OF COMMERCE
Under the Paperwork Reduction Act of 1995, no persons are required to respond to a collection of information unless it displays valid OMB control number.

PETITION TO ACCEPT UNINTENTIONALLY DELAYED PAYMENT OF MAINTENANCE FEE IN AN EXPIRED PATENT (37 CFR 1.378(c))

Patent Number	Issue Date (YYYY-MM-DD)	Application Number	Filing Date (YYYY-MM-DD)	Docket Number (if applicable)
7,020,536	2006-03-28	10/708,059	2004-02-06	LKSP0032USA

CAUTION: Maintenance fee (and surcharge, if any) payment must correctly identify: (1) the patent number and (2) the application number of the actual U.S. application leading to issuance of that patent to ensure the fee(s) is/are associated with the correct patent. 37 CFR 1.366(c) and (d).

SMALL ENTITY
☐ Patentee claims, or has previously claimed, small entity status. See 37 CFR 1.27.

LOSS OF ENTITLEMENT TO SMALL ENTITY STATUS
☐ Patentee is no longer entitled to small entity status. See 37 CFR 1.27(g)

NOT Small Entity			Small Entity		
	Fee	Code		Fee	Code
◉	3 ½ year	(1551)	○	3 ½ year	(2551)
○	7 ½ year	(1552)	○	7 ½ year	(2552)
○	11 ½ year	(1553)	○	11 ½ year	(2553)

SURCHARGE
The surcharge required by 37 CFR 1.20(i)(2) (Fee Code 1558) must be paid as a condition of accepting unintentionally delayed payment of the maintenance fee.

MAINTENANCE FEE (37 CFR 1.20(e)-(g))
The appropriate maintenance fee must be submitted with this petition.

STATEMENT
THE UNDERSIGNED CERTIFIES THAT THE DELAY IN PAYMENT OF THE MAINTENANCE FEE TO THIS PATENT WAS UNINTENTIONAL

PETITIONER(S) REQUEST THAT THE DELAYED PAYMENT OF THE MAINTENANCE FEE BE ACCEPTED AND THE PATENT REINSTATED

THIS PORTION MUST BE COMPLETED BY THE SIGNATORY OR SIGNATORIES

37 CFR 1.378(d) states: "Any petition under this section must be signed by an attorney or agent registered to practice before the Patent and Trademark Office, or by the patentee, the assignee, or other party in interest."

I certify, in accordance with 37 CFR 1.4(d)(4) that I am

◉ An attorney or agent registered to practice before the Patent and Trademark Office

○ A sole patentee

○ A joint patentee; I certify that I am authorized to sign this submission on behalf of all the other patentees.

○ A joint patentee; all of whom are signing this e-petition

○ The assignee of record of the entire interest

Under the Paperwork Reduction Act of 1995, no persons are required to respond to a collection of information unless it displays valid OMB control number.

Patent Practitioner			
A signature of the applicant or representative is required in accordance with 37 CFR 1.33 and 10.18. Please see 37 CFR 1.4(d) for the form of the signature			
Signature	/Winston Hsu/	Date (YYYY-MM-DD)	2012-03-05
Name	Winston Hsu	Registration Number	41526

This collection of information is required by 37 CFR 1.378(c). The information is required to obtain or retain a benefit by the public which is to file (and by the USPTO to process) an application. Confidentiality is governed by 35 U.S.C. 122 and 37 CFR 1.11 and 1.14. This collection is estimated to take 1 hour to complete, including gathering, preparing, and submitting the completed application form to the USPTO. Time will vary depending upon the individual case. Any comments on the amount of time you require to complete this form and/ or suggestions for reducing this burden, should be sent to the Chief Information Officer, U.S. Patent and Trademark Office, U.S. Department of Commerce, P.O. Box 1450, Alexandria, VA 22313-1450. DO NOT SEND FEES OR COMPLETED FORMS TO THIS ADDRESS. **This form can only be used when in conjunction with EFS-Web. If this form is mailed to the USPTO, it may cause delays in reinstating the patent.**

Privacy Act Statement

The Privacy Act of 1974 (P.L. 93-579) requires that you be given certain information in connection with your submission of the attached form related to a patent application or patent. Accordingly, pursuant to the requirements of the Act, please be advised that: (1) the general authority for the collection of this information is 35 U.S.C. 2(b)(2); (2) furnishing of the information solicited is voluntary; and (3) the principal purpose for which the information is used by the U.S. Patent and Trademark Office is to process and/or examine your submission related to a patent application or patent. If you do not furnish the requested information, the U.S. Patent and Trademark Office may not be able to process and/or examine your submission, which may result in termination of proceedings or abandonment of the application or expiration of the patent.

The information provided by you in this form will be subject to the following routine uses:

1. The information on this form will be treated confidentially to the extent allowed under the Freedom of Information Act (5 U.S.C. 552) and the Privacy Act (5 U.S.C. 552a). Records from this system of records may be disclosed to the Department of Justice to determine whether the Freedom of Information Act requires disclosure of these records.

2. A record from this system of records may be disclosed, as a routine use, in the course of presenting evidence to a court, magistrate, or administrative tribunal, including disclosures to opposing counsel in the course of settlement negotiations.

3. A record in this system of records may be disclosed, as a routine use, to a Member of Congress submitting a request involving an individual, to whom the record pertains, when the individual has requested assistance from the Member with respect to the subject matter of the record.

4. A record in this system of records may be disclosed, as a routine use, to a contractor of the Agency having need for the information in order to perform a contract. Recipients of information shall be required to comply with the requirements of the Privacy Act of 1974, as amended, pursuant to 5 U.S.C. 552a(m).

5. A record related to an International Application filed under the Patent Cooperation Treaty in this system of records may be disclosed, as a routine use, to the International Bureau of the World Intellectual Property Organization, pursuant to the Patent Cooperation Treaty.

6. A record in this system of records may be disclosed, as a routine use, to another federal agency for purposes of National Security review (35 U.S.C. 181) and for review pursuant to the Atomic Energy Act (42 U.S.C. 218(c)).

7. A record from this system of records may be disclosed, as a routine use, to the Administrator, General Services, or his/her designee, during an inspection of records conducted by GSA as part of that agency's responsibility to recommend improvements in records management practices and programs, under authority of 44 U.S.C. 2904 and 2906. Such disclosure shall be made in accordance with the GSA regulations governing inspection of records for this purpose, and any other relevant (i.e., GSA or Commerce) directive. Such disclosure shall not be used to make determinations about individuals.

8. A record from this system of records may be disclosed, as a routine use, to the public after either publication of the application pursuant to 35 U.S.C. 122(b) or issuance of a patent pursuant to 35 U.S.C. 151. Further, a record may be disclosed, subject to the limitations of 37 CFR 1.14, as a routine use, to the public if the record was filed in an application which became abandoned or in which the proceedings were terminated and which application is referenced by either a published application, an application open to public inspections or an issued patent.

9. A record from this system of records may be disclosed, as a routine use, to a Federal, State, or local law enforcement agency, if the USPTO becomes aware of a violation or potential violation of law or regulation.

UNITED STATES PATENT AND TRADEMARK OFFICE

Commissioner for Patents
United States Patent and Trademark Office
P.O. Box 1450
Alexandria, VA 22313-1450
www.uspto.gov

In re Patent No. 7020536
Issue Date: March 28,2006
Application No. 10708059
Filed: February 6,2004
Attorney Docket No. LKSP0032USA

:
:DECISION GRANTING PETITION
:UNDER 37 CFR 1.378(c)
:

This is a decision on the electronic petition, filed March 5,2012 ,under 37 CFR 1.378(c) to accept the unintentionally delayed payment of the 3.5 year maintenance fee for the above-identified patent.

The petition is **GRANTED**.

The maintenance fee is accepted, and the above-identified patent reinstated as of March 5,2012 .
This decision also constitutes notice that the fee has been accepted. An electronic copy of the petition and this decision has been created as an entry in the Image File Wrapper. Nevertheless, petitioner should print and retain an independent copy.

Telephone inquiries related to this electronic decision should be directed to the Electronic Business Center at 1-866-217-9197.

UNITED STATES PATENT AND TRADEMARK OFFICE

Commissioner for Patents
United States Patent and Trademark Office
P.O. Box 1450
Alexandria, VA 22313-1450
www.uspto.gov

In re Patent No. 7099729
Issue Date: August 29,2006
Application No. 10708277
Filed: February 20,2004
Attorney Docket No. LKSP0045USA

:
:DECISION GRANTING PETITION
:UNDER 37 CFR 1.378(c)
:

This is a decision on the electronic petition, filed April 6,2012 ,under 37 CFR 1.378(c) to accept the unintentionally delayed payment of the 3.5 year maintenance fee for the above-identified patent.

The petition is **GRANTED**.

The maintenance fee is accepted, and the above-identified patent reinstated as of April 6,2012 .
This decision also constitutes notice that the fee has been accepted. An electronic copy of the petition and this decision has been created as an entry in the Image File Wrapper. Nevertheless, petitioner should print and retain an independent copy.

Telephone inquiries related to this electronic decision should be directed to the Electronic Business Center at 1-866-217-9197.

PTO/SB/66 (03-09)
Approved for use through 03/31/2012. OMB 0651-0016
U.S. Patent and Trademark Office: U.S. DEPARTMENT OF COMMERCE
Under the Paperwork Reduction Act of 1995, no persons are required to respond to a collection of information unless it displays valid OMB control number.

PETITION TO ACCEPT UNINTENTIONALLY DELAYED PAYMENT OF MAINTENANCE FEE IN AN EXPIRED PATENT (37 CFR 1.378(c))

Patent Number	Issue Date (YYYY-MM-DD)	Application Number	Filing Date (YYYY-MM-DD)	Docket Number (if applicable)
7,099,729	2006-08-29	10/708,277	2004-02-20	LKSP0045USA

CAUTION: Maintenance fee (and surcharge, if any) payment must correctly identify: (1) the patent number and (2) the application number of the actual U.S. application leading to issuance of that patent to ensure the fee(s) is/are associated with the correct patent. 37 CFR 1.366(c) and (d).

SMALL ENTITY
☐ Patentee claims, or has previously claimed, small entity status. See 37 CFR 1.27.

LOSS OF ENTITLEMENT TO SMALL ENTITY STATUS
☐ Patentee is no longer entitled to small entity status. See 37 CFR 1.27(g)

NOT Small Entity			Small Entity		
	Fee	Code		Fee	Code
◉	3 ½ year	(1551)	○	3 ½ year	(2551)
○	7 ½ year	(1552)	○	7 ½ year	(2552)
○	11 ½ year	(1553)	○	11 ½ year	(2553)

SURCHARGE
The surcharge required by 37 CFR 1.20(i)(2) (Fee Code 1558) must be paid as a condition of accepting unintentionally delayed payment of the maintenance fee.

MAINTENANCE FEE (37 CFR 1.20(e)-(g))
The appropriate maintenance fee must be submitted with this petition.

STATEMENT
THE UNDERSIGNED CERTIFIES THAT THE DELAY IN PAYMENT OF THE MAINTENANCE FEE TO THIS PATENT WAS UNINTENTIONAL

PETITIONER(S) REQUEST THAT THE DELAYED PAYMENT OF THE MAINTENANCE FEE BE ACCEPTED AND THE PATENT REINSTATED

THIS PORTION MUST BE COMPLETED BY THE SIGNATORY OR SIGNATORIES

37 CFR 1.378(d) states: "Any petition under this section must be signed by an attorney or agent registered to practice before the Patent and Trademark Office, or by the patentee, the assignee, or other party in interest."

I certify, in accordance with 37 CFR 1.4(d)(4) that I am

◉ An attorney or agent registered to practice before the Patent and Trademark Office

○ A sole patentee

○ A joint patentee; I certify that I am authorized to sign this submission on behalf of all the other patentees.

○ A joint patentee; all of whom are signing this e-petition

○ The assignee of record of the entire interest

Under the Paperwork Reduction Act of 1995, no persons are required to respond to a collection of information unless it displays valid OMB control number.

Patent Practitioner			
A signature of the applicant or representative is required in accordance with 37 CFR 1.33 and 10.18. Please see 37 CFR 1.4(d) for the form of the signature			
Signature	/Winston Hsu/	Date (YYYY-MM-DD)	2012-04-06
Name	Winston Hsu	Registration Number	41526

This collection of information is required by 37 CFR 1.378(c). The information is required to obtain or retain a benefit by the public which is to file (and by the USPTO to process) an application. Confidentiality is governed by 35 U.S.C. 122 and 37 CFR 1.11 and 1.14. This collection is estimated to take 1 hour to complete, including gathering, preparing, and submitting the completed application form to the USPTO. Time will vary depending upon the individual case. Any comments on the amount of time you require to complete this form and/ or suggestions for reducing this burden, should be sent to the Chief Information Officer, U.S. Patent and Trademark Office, U.S. Department of Commerce, P.O. Box 1450, Alexandria, VA 22313-1450. DO NOT SEND FEES OR COMPLETED FORMS TO THIS ADDRESS. **This form can only be used when in conjunction with EFS-Web. If this form is mailed to the USPTO, it may cause delays in reinstating the patent.**

Privacy Act Statement

The Privacy Act of 1974 (P.L. 93-579) requires that you be given certain information in connection with your submission of the attached form related to a patent application or patent. Accordingly, pursuant to the requirements of the Act, please be advised that: (1) the general authority for the collection of this information is 35 U.S.C. 2(b)(2); (2) furnishing of the information solicited is voluntary; and (3) the principal purpose for which the information is used by the U.S. Patent and Trademark Office is to process and/or examine your submission related to a patent application or patent. If you do not furnish the requested information, the U.S. Patent and Trademark Office may not be able to process and/or examine your submission, which may result in termination of proceedings or abandonment of the application or expiration of the patent.

The information provided by you in this form will be subject to the following routine uses:

1. The information on this form will be treated confidentially to the extent allowed under the Freedom of Information Act (5 U.S.C. 552) and the Privacy Act (5 U.S.C. 552a). Records from this system of records may be disclosed to the Department of Justice to determine whether the Freedom of Information Act requires disclosure of these records.

2. A record from this system of records may be disclosed, as a routine use, in the course of presenting evidence to a court, magistrate, or administrative tribunal, including disclosures to opposing counsel in the course of settlement negotiations.

3. A record in this system of records may be disclosed, as a routine use, to a Member of Congress submitting a request involving an individual, to whom the record pertains, when the individual has requested assistance from the Member with respect to the subject matter of the record.

4. A record in this system of records may be disclosed, as a routine use, to a contractor of the Agency having need for the information in order to perform a contract. Recipients of information shall be required to comply with the requirements of the Privacy Act of 1974, as amended, pursuant to 5 U.S.C. 552a(m).

5. A record related to an International Application filed under the Patent Cooperation Treaty in this system of records may be disclosed, as a routine use, to the International Bureau of the World Intellectual Property Organization, pursuant to the Patent Cooperation Treaty.

6. A record in this system of records may be disclosed, as a routine use, to another federal agency for purposes of National Security review (35 U.S.C. 181) and for review pursuant to the Atomic Energy Act (42 U.S.C. 218(c)).

7. A record from this system of records may be disclosed, as a routine use, to the Administrator, General Services, or his/her designee, during an inspection of records conducted by GSA as part of that agency's responsibility to recommend improvements in records management practices and programs, under authority of 44 U.S.C. 2904 and 2906. Such disclosure shall be made in accordance with the GSA regulations governing inspection of records for this purpose, and any other relevant (i.e., GSA or Commerce) directive. Such disclosure shall not be used to make determinations about individuals.

8. A record from this system of records may be disclosed, as a routine use, to the public after either publication of the application pursuant to 35 U.S.C. 122(b) or issuance of a patent pursuant to 35 U.S.C. 151. Further, a record may be disclosed, subject to the limitations of 37 CFR 1.14, as a routine use, to the public if the record was filed in an application which became abandoned or in which the proceedings were terminated and which application is referenced by either a published application, an application open to public inspections or an issued patent.

9. A record from this system of records may be disclosed, as a routine use, to a Federal, State, or local law enforcement agency, if the USPTO becomes aware of a violation or potential violation of law or regulation.

UNITED STATES PATENT AND TRADEMARK OFFICE

Commissioner for Patents
United States Patent and Trademark Office
P.O. Box 1450
Alexandria, VA 22313-1450
www.uspto.gov

DARBY & DARBY P.C.
P.O. BOX 770
Church Street Station
New York NY 10008-0770

MAILED
JUN 13 2011
OFFICE OF PETITIONS

In re Patent No. 7,277,864 :
Issue Date: October 2, 2007 :
Application No. 10/708,441 : NOTICE
Filed: March 3, 2004 :
Attorney Docket No. 20118/0200853-US0 :

This is a notice regarding your request for acceptance of a fee deficiency submission under 37 CFR 1.28 filed May 23, 2011.

The Office no longer investigates or rejects original or reissue applications under 37 CFR 1.56. **1098 Off. Gaz. Pat. Office 502 (January 3, 1989)**. Therefore, nothing in this Notice is intended to imply that an investigation was done.

Your fee deficiency submission under 37 CFR 1.28 is hereby **ACCEPTED**.

This patent is no longer entitled to small entity status. Accordingly, all future fees paid in this patent must be paid at the large entity rate.

A courtesy copy of this decision is being mailed to the address given on the petition. However, the Office will mail all future correspondence solely to the address of record. If appropriate the proper power attorney documents should also be submitted.

Inquiries related to this communication should be directed to the undersigned at (571) 272-3215.

Charlema Grant
Petitions Attorney
Office of Petitions

Cc: David M. Rosenblatt
Thomson Reuters
3 Times Square
New York, New York 10036

UNITED STATES PATENT AND TRADEMARK OFFICE

Commissioner for Patents
United States Patent and Trademark Office
P.O. Box 1450
Alexandria, VA 22313-1450
www.uspto.gov

Date : July 22, 2011

Patent No. :7765975
Ser. No. :10/708560
Inventor(s) : Maso Koriyama
Issued :August 3, 2010
Title :

Re: Request for Certificate of Correction

Consideration has been given your request for the issuance of a certificate of correction for the above-identified patent under the provisions of Rule(s) 1.322 and/or 1.323.

Assignees' names and addresses (assignment data) printed in a patent, are based *solely* on information supplied in the appropriate space for identifying the assignment data, i.e., item 3 of the Issue Fee Transmittal Form PTOL-85B. Granting of a request under 37 CFR 3.81(b) is required to correct applicant's error providing ***incorrect or erroneous*** assignment data, *before* issuance of a Certificate of Correction, under 37 CFR 1.323 *(see Manual of Patent Examining Procedures (M.P.E.P) Chp.1400, sect. 1481)*. This procedure is required *at any time after the issue fee is paid*, including after issuance of the patent.

In view of the foregoing, your request, in this matter, is hereby denied.

A request to correct the Assignee under 37 CFR 3.81(b) should include:

- **A.** the processing fee set forth in 37 CFR 1. 17(i) (currently $130);
- **B. a statement that the failure to include the correct assignee name on the PTOL-85B was inadvertent; and**
- C. a copy of the Notice of Recordation of Assignment Document, reflecting the reel and frame number where the assignment(s) is recorded and/or reflecting proof of *the date* the assignment was submitted for recordation.

In the Request, Applicant(s) may request that the file be forwarded to Certificates of Correction Branch, for issuance of a Certificate of Correction, if the Request is granted.

Any request under 37 CFR 3.81(b) should be directed to the following address or facsimile number:

By mail:	Mail Stop PETITIONS Commissioner for Patents Post Office Box 1450 Alexandria, VA 22313-1450
By hand:	Customer Service Window Mail Stop Petitions Randolph Building 401 Dulany Street Alexandria, VA 22314
By fax:	(703) 872-9306 ATTN: Office of Petitions
Electronic Filing	uspto.gov/ebc/index.html (must be registered as an e-filer) Support 1-866-217-9197 571-272-4100

If a fee (currently $100) was previously submitted for consideration of a Request for Certificate of Correction, under CFR 1.323, to correct assignment data, no additional fee is required.

Any inquiries concerning this communication should be directed to Ms. A. Green at 571-272-9005.

For Mary Diggs
Decisions & Certificates
of Correction Branch
(703) 756-1580 or (571) 272-

Richard A. Jones
3825 Woodward Avenue, Ste 2000
Bloomfield Hills, MI 48304

/arg

UNITED STATES PATENT AND TRADEMARK OFFICE

Commissioner for Patents
United States Patent and Trademark Office
P.O. Box 1450
Alexandria, VA 22313-1450
www.uspto.gov

In re Patent No. 6999897
Issue Date: February 14,2006
Application No. 10708573
Filed: March 11,2004
Attorney Docket No. LKSP0047USA

:
:DECISION GRANTING PETITION
:UNDER 37 CFR 1.378(c)
:

This is a decision on the electronic petition, filed February 4,2012 ,under 37 CFR 1.378(c) to accept the unintentionally delayed payment of the 3.5 year maintenance fee for the above-identified patent.

The petition is **GRANTED**.

The maintenance fee is accepted, and the above-identified patent reinstated as of February 4,2012 . This decision also constitutes notice that the fee has been accepted. An electronic copy of the petition and this decision has been created as an entry in the Image File Wrapper. Nevertheless, petitioner should print and retain an independent copy.

Telephone inquiries related to this electronic decision should be directed to the Electronic Business Center at 1-866-217-9197.

PTO/SB/66 (03-09)
Approved for use through 03/31/2012. OMB 0651-0016
U.S. Patent and Trademark Office: U.S. DEPARTMENT OF COMMERCE
Under the Paperwork Reduction Act of 1995, no persons are required to respond to a collection of information unless it displays valid OMB control number.

PETITION TO ACCEPT UNINTENTIONALLY DELAYED PAYMENT OF MAINTENANCE FEE IN AN EXPIRED PATENT (37 CFR 1.378(c))

Patent Number	Issue Date (YYYY-MM-DD)	Application Number	Filing Date (YYYY-MM-DD)	Docket Number (if applicable)
6,999,897	2006-02-14	10/708,573	2004-03-11	LKSP0047USA

CAUTION: Maintenance fee (and surcharge, if any) payment must correctly identify: (1) the patent number and (2) the application number of the actual U.S. application leading to issuance of that patent to ensure the fee(s) is/are associated with the correct patent. 37 CFR 1.366(c) and (d).

SMALL ENTITY
☐ Patentee claims, or has previously claimed, small entity status. See 37 CFR 1.27.

LOSS OF ENTITLEMENT TO SMALL ENTITY STATUS
☐ Patentee is no longer entitled to small entity status. See 37 CFR 1.27(g)

NOT Small Entity			Small Entity		
	Fee	Code		Fee	Code
◉	3 ½ year	(1551)	○	3 ½ year	(2551)
○	7 ½ year	(1552)	○	7 ½ year	(2552)
○	11 ½ year	(1553)	○	11 ½ year	(2553)

SURCHARGE
The surcharge required by 37 CFR 1.20(i)(2) (Fee Code 1558) must be paid as a condition of accepting unintentionally delayed payment of the maintenance fee.

MAINTENANCE FEE (37 CFR 1.20(e)-(g))
The appropriate maintenance fee must be submitted with this petition.

STATEMENT
THE UNDERSIGNED CERTIFIES THAT THE DELAY IN PAYMENT OF THE MAINTENANCE FEE TO THIS PATENT WAS UNINTENTIONAL

PETITIONER(S) REQUEST THAT THE DELAYED PAYMENT OF THE MAINTENANCE FEE BE ACCEPTED AND THE PATENT REINSTATED

THIS PORTION MUST BE COMPLETED BY THE SIGNATORY OR SIGNATORIES

37 CFR 1.378(d) states: "Any petition under this section must be signed by an attorney or agent registered to practice before the Patent and Trademark Office, or by the patentee, the assignee, or other party in interest."

I certify, in accordance with 37 CFR 1.4(d)(4) that I am

◉ An attorney or agent registered to practice before the Patent and Trademark Office

○ A sole patentee

○ A joint patentee; I certify that I am authorized to sign this submission on behalf of all the other patentees.

○ A joint patentee; all of whom are signing this e-petition

○ The assignee of record of the entire interest

Under the Paperwork Reduction Act of 1995, no persons are required to respond to a collection of information unless it displays valid OMB control number.

Patent Practitioner			
A signature of the applicant or representative is required in accordance with 37 CFR 1.33 and 10.18. Please see 37 CFR 1.4(d) for the form of the signature			
Signature	/Winston Hsu/	Date (YYYY-MM-DD)	2012-02-04
Name	Winston Hsu	Registration Number	41526

This collection of information is required by 37 CFR 1.378(c). The information is required to obtain or retain a benefit by the public which is to file (and by the USPTO to process) an application. Confidentiality is governed by 35 U.S.C. 122 and 37 CFR 1.11 and 1.14. This collection is estimated to take 1 hour to complete, including gathering, preparing, and submitting the completed application form to the USPTO. Time will vary depending upon the individual case. Any comments on the amount of time you require to complete this form and/ or suggestions for reducing this burden, should be sent to the Chief Information Officer, U.S. Patent and Trademark Office, U.S. Department of Commerce, P.O. Box 1450, Alexandria, VA 22313-1450. DO NOT SEND FEES OR COMPLETED FORMS TO THIS ADDRESS. **This form can only be used when in conjunction with EFS-Web. If this form is mailed to the USPTO, it may cause delays in reinstating the patent.**

Privacy Act Statement

The Privacy Act of 1974 (P.L. 93-579) requires that you be given certain information in connection with your submission of the attached form related to a patent application or patent. Accordingly, pursuant to the requirements of the Act, please be advised that: (1) the general authority for the collection of this information is 35 U.S.C. 2(b)(2); (2) furnishing of the information solicited is voluntary; and (3) the principal purpose for which the information is used by the U.S. Patent and Trademark Office is to process and/or examine your submission related to a patent application or patent. If you do not furnish the requested information, the U.S. Patent and Trademark Office may not be able to process and/or examine your submission, which may result in termination of proceedings or abandonment of the application or expiration of the patent.

The information provided by you in this form will be subject to the following routine uses:

1. The information on this form will be treated confidentially to the extent allowed under the Freedom of Information Act (5 U.S.C. 552) and the Privacy Act (5 U.S.C. 552a). Records from this system of records may be disclosed to the Department of Justice to determine whether the Freedom of Information Act requires disclosure of these records.

2. A record from this system of records may be disclosed, as a routine use, in the course of presenting evidence to a court, magistrate, or administrative tribunal, including disclosures to opposing counsel in the course of settlement negotiations.

3. A record in this system of records may be disclosed, as a routine use, to a Member of Congress submitting a request involving an individual, to whom the record pertains, when the individual has requested assistance from the Member with respect to the subject matter of the record.

4. A record in this system of records may be disclosed, as a routine use, to a contractor of the Agency having need for the information in order to perform a contract. Recipients of information shall be required to comply with the requirements of the Privacy Act of 1974, as amended, pursuant to 5 U.S.C. 552a(m).

5. A record related to an International Application filed under the Patent Cooperation Treaty in this system of records may be disclosed, as a routine use, to the International Bureau of the World Intellectual Property Organization, pursuant to the Patent Cooperation Treaty.

6. A record in this system of records may be disclosed, as a routine use, to another federal agency for purposes of National Security review (35 U.S.C. 181) and for review pursuant to the Atomic Energy Act (42 U.S.C. 218(c)).

7. A record from this system of records may be disclosed, as a routine use, to the Administrator, General Services, or his/her designee, during an inspection of records conducted by GSA as part of that agency's responsibility to recommend improvements in records management practices and programs, under authority of 44 U.S.C. 2904 and 2906. Such disclosure shall be made in accordance with the GSA regulations governing inspection of records for this purpose, and any other relevant (i.e., GSA or Commerce) directive. Such disclosure shall not be used to make determinations about individuals.

8. A record from this system of records may be disclosed, as a routine use, to the public after either publication of the application pursuant to 35 U.S.C. 122(b) or issuance of a patent pursuant to 35 U.S.C. 151. Further, a record may be disclosed, subject to the limitations of 37 CFR 1.14, as a routine use, to the public if the record was filed in an application which became abandoned or in which the proceedings were terminated and which application is referenced by either a published application, an application open to public inspections or an issued patent.

9. A record from this system of records may be disclosed, as a routine use, to a Federal, State, or local law enforcement agency, if the USPTO becomes aware of a violation or potential violation of law or regulation.

UNITED STATES PATENT AND TRADEMARK OFFICE

Commissioner for Patents
United States Patent and Trademark Office
P.O. Box 1450
Alexandria, VA 22313-1450
www.uspto.gov

DICKINSON WRIGHT PLLC
38525 WOODWARD AVENUE
SUITE 2000
BLOOMFIELD HILLS MI 48304-2970

MAILED
APR 22 2011
OFFICE OF PETITIONS

In re Patent No. 6,830,021	:	
Issue Date: December 14, 2004	:	
Application No. 10/708,578	:	DECISION ON PETITION
Filed: March 12, 2004	:	
Attorney Docket No. **27006-00077**	:	

This is a decision on the petition under 37 CFR 1.378(c), filed December 10, 2010, to accept the unintentionally delayed payment of a maintenance fee for the above-identified patent.

The petition is **GRANTED**.

This patent expired at midnight on December 14, 2008 for failure to pay the three and one-half year maintenance fee. Since this petition was submitted within twenty-four months after the six-month grace period provided in 37 CFR 1.362(e), the petition was timely filed under the provisions of 37 CFR 1.378(c).

The maintenance fee is hereby accepted and the above-identified patent is reinstated as of the mail date of this decision.

37 CFR 1.378(c) requires a statement that "the delay in payment of the maintenance fee was unintentional." Since the statement appearing in the petition varies from the language required by 37 CFR 1.378(c)(3), the statement will be construed as the statement required by 37 CFR 1.378(c)(3). If this is an incorrect reading of the statement appearing in the petition, petitioner must promptly notify the Office.

It is not apparent whether the person signing the statement of unintentional delay was in a position to have firsthand or direct knowledge of the facts and circumstances of the delay at issue. Nevertheless, such statement is being treated as having been made as the result of a reasonable inquiry into the facts and circumstances of such delay. In the event that such an

inquiry has not been made, petitioner must make such an inquiry. If such inquiry results in the discovery that the delay in paying the maintenance fee under 37 CFR 1.378(c) was intentional, petitioner must notify the Office.

Telephone inquiries concerning this decision should be directed to Tredelle Jackson at (571) 272-2783.

Ramesh Krishnamurthy

Ramesh Krishnamurthy
Petitions Examiner
Office of Petitions

PTO/SB/66 (03-09)
Approved for use through 03/31/2012. OMB 0651-0016
U.S. Patent and Trademark Office: U.S. DEPARTMENT OF COMMERCE
Under the Paperwork Reduction Act of 1995, no persons are required to respond to a collection of information unless it displays valid OMB control number.

PETITION TO ACCEPT UNINTENTIONALLY DELAYED PAYMENT OF MAINTENANCE FEE IN AN EXPIRED PATENT (37 CFR 1.378(c))

Patent Number	Issue Date (YYYY-MM-DD)	Application Number	Filing Date (YYYY-MM-DD)	Docket Number (if applicable)
6912986	2005-07-05	10708582	2004-03-12	27006-00079

CAUTION: Maintenance fee (and surcharge, if any) payment must correctly identify: (1) the patent number and (2) the application number of the actual U.S. application leading to issuance of that patent to ensure the fee(s) is/are associated with the correct patent. 37 CFR 1.366(c) and (d).

SMALL ENTITY
☐ Patentee claims, or has previously claimed, small entity status. See 37 CFR 1.27.

LOSS OF ENTITLEMENT TO SMALL ENTITY STATUS
☐ Patentee is no longer entitled to small entity status. See 37 CFR 1.27(g)

NOT Small Entity	Fee	Code	Small Entity	Fee	Code
◉	3 ½ year	(1551)	◯	3 ½ year	(2551)
◯	7 ½ year	(1552)	◯	7 ½ year	(2552)
◯	11 ½ year	(1553)	◯	11 ½ year	(2553)

SURCHARGE
The surcharge required by 37 CFR 1.20(i)(2) (Fee Code 1558) must be paid as a condition of accepting unintentionally delayed payment of the maintenance fee.

MAINTENANCE FEE (37 CFR 1.20(e)-(g))
The appropriate maintenance fee must be submitted with this petition.

STATEMENT
THE UNDERSIGNED CERTIFIES THAT THE DELAY IN PAYMENT OF THE MAINTENANCE FEE TO THIS PATENT WAS UNINTENTIONAL

PETITIONER(S) REQUEST THAT THE DELAYED PAYMENT OF THE MAINTENANCE FEE BE ACCEPTED AND THE PATENT REINSTATED

THIS PORTION MUST BE COMPLETED BY THE SIGNATORY OR SIGNATORIES

37 CFR 1.378(d) states: "Any petition under this section must be signed by an attorney or agent registered to practice before the Patent and Trademark Office, or by the patentee, the assignee, or other party in interest."

I certify, in accordance with 37 CFR 1.4(d)(4) that I am

◉ An attorney or agent registered to practice before the Patent and Trademark Office

◯ A sole patentee

◯ A joint patentee; I certify that I am authorized to sign this submission on behalf of all the other patentees.

◯ A joint patentee; all of whom are signing this e-petition

◯ The assignee of record of the entire interest

Under the Paperwork Reduction Act of 1995, no persons are required to respond to a collection of information unless it displays valid OMB control number.

Patent Practitioner			
A signature of the applicant or representative is required in accordance with 37 CFR 1.33 and 10.18. Please see 37 CFR 1.4(d) for the form of the signature			
Signature	/Richard A. Jones/	Date (YYYY-MM-DD)	2010-12-13
Name	Richard A. Jones	Registration Number	39242

This collection of information is required by 37 CFR 1.378(c). The information is required to obtain or retain a benefit by the public which is to file (and by the USPTO to process) an application. Confidentiality is governed by 35 U.S.C. 122 and 37 CFR 1.11 and 1.14. This collection is estimated to take 1 hour to complete, including gathering, preparing, and submitting the completed application form to the USPTO. Time will vary depending upon the individual case. Any comments on the amount of time you require to complete this form and/ or suggestions for reducing this burden, should be sent to the Chief Information Officer, U.S. Patent and Trademark Office, U.S. Department of Commerce, P.O. Box 1450, Alexandria, VA 22313-1450. DO NOT SEND FEES OR COMPLETED FORMS TO THIS ADDRESS. **This form can only be used when in conjunction with EFS-Web. If this form is mailed to the USPTO, it may cause delays in reinstating the patent.**

Privacy Act Statement

The Privacy Act of 1974 (P.L. 93-579) requires that you be given certain information in connection with your submission of the attached form related to a patent application or patent. Accordingly, pursuant to the requirements of the Act, please be advised that: (1) the general authority for the collection of this information is 35 U.S.C. 2(b)(2); (2) furnishing of the information solicited is voluntary; and (3) the principal purpose for which the information is used by the U.S. Patent and Trademark Office is to process and/or examine your submission related to a patent application or patent. If you do not furnish the requested information, the U.S. Patent and Trademark Office may not be able to process and/or examine your submission, which may result in termination of proceedings or abandonment of the application or expiration of the patent.

The information provided by you in this form will be subject to the following routine uses:

1. The information on this form will be treated confidentially to the extent allowed under the Freedom of Information Act (5 U.S.C. 552) and the Privacy Act (5 U.S.C. 552a). Records from this system of records may be disclosed to the Department of Justice to determine whether the Freedom of Information Act requires disclosure of these records.

2. A record from this system of records may be disclosed, as a routine use, in the course of presenting evidence to a court, magistrate, or administrative tribunal, including disclosures to opposing counsel in the course of settlement negotiations.

3. A record in this system of records may be disclosed, as a routine use, to a Member of Congress submitting a request involving an individual, to whom the record pertains, when the individual has requested assistance from the Member with respect to the subject matter of the record.

4. A record in this system of records may be disclosed, as a routine use, to a contractor of the Agency having need for the information in order to perform a contract. Recipients of information shall be required to comply with the requirements of the Privacy Act of 1974, as amended, pursuant to 5 U.S.C. 552a(m).

5. A record related to an International Application filed under the Patent Cooperation Treaty in this system of records may be disclosed, as a routine use, to the International Bureau of the World Intellectual Property Organization, pursuant to the Patent Cooperation Treaty.

6. A record in this system of records may be disclosed, as a routine use, to another federal agency for purposes of National Security review (35 U.S.C. 181) and for review pursuant to the Atomic Energy Act (42 U.S.C. 218(c)).

7. A record from this system of records may be disclosed, as a routine use, to the Administrator, General Services, or his/her designee, during an inspection of records conducted by GSA as part of that agency's responsibility to recommend improvements in records management practices and programs, under authority of 44 U.S.C. 2904 and 2906. Such disclosure shall be made in accordance with the GSA regulations governing inspection of records for this purpose, and any other relevant (i.e., GSA or Commerce) directive. Such disclosure shall not be used to make determinations about individuals.

8. A record from this system of records may be disclosed, as a routine use, to the public after either publication of the application pursuant to 35 U.S.C. 122(b) or issuance of a patent pursuant to 35 U.S.C. 151. Further, a record may be disclosed, subject to the limitations of 37 CFR 1.14, as a routine use, to the public if the record was filed in an application which became abandoned or in which the proceedings were terminated and which application is referenced by either a published application, an application open to public inspections or an issued patent.

9. A record from this system of records may be disclosed, as a routine use, to a Federal, State, or local law enforcement agency, if the USPTO becomes aware of a violation or potential violation of law or regulation.

UNITED STATES PATENT AND TRADEMARK OFFICE

Commissioner for Patents
United States Patent and Trademark Office
P.O. Box 1450
Alexandria, VA 22313-1450
www.uspto.gov

In re Patent No. 6912986
Issue Date: July 5,2005
Application No. 10708582
Filed: March 12,2004
Attorney Docket No. SIMTEK6883

:
:DECISION GRANTING PETITION
:UNDER 37 CFR 1.378(c)
:

This is a decision on the electronic petition, filed December 13,2010 ,under 37 CFR 1.378(c) to accept the unintentionally delayed payment of the 3.5 year maintenance fee for the above-identified patent.

The petition is **GRANTED**.

The maintenance fee is accepted, and the above-identified patent reinstated as of December 13,2010 . This decision also constitutes notice that the fee has been accepted. An electronic copy of the petition and this decision has been created as an entry in the Image File Wrapper. Nevertheless, petitioner should print and retain an independent copy.

Telephone inquiries related to this electronic decision should be directed to the Electronic Business Center at 1-866-217-9197.

UNITED STATES PATENT AND TRADEMARK OFFICE

COMMISSIONER FOR PATENTS
UNITED STATES PATENT AND TRADEMARK OFFICE
P.O. BOX 1450

Mr. Winston Hsu
North American Intellectual Property Corporation
P.O. Box 506
Merrifield, Virginia 22116

MAILED
JAN 21 2011
OFFICE OF PETITIONS

In re Application of	:	
Chih-Chung CHUANG et al.	:	DECISION GRANTING PETITION
Application No. 10/708,642	:	UNDER 37 CFR 1.181
Filed: 17 March 2004	:	
Atty Docket No. ADTP0066USA		

This is a decision on the petition under 37 CFR 1.181, filed 14 April 2010, to revive the above-identified application.

The petition is **GRANTED**.

The above-identified application was held abandoned because the period for seeking court review of the decision by the Board of Appeals and Interferences mailed 11 January 2010 had expired and there were no allowed claims. A Notice of Abandonment was mailed 30 March 2010.

Petitioner asserts that the Notice of Abandonment mailed 30 March 2010 be withdrawn as it was premature because the application contains claims allowed by the examiner.

MPEP 1214.06 (II) states:

> The appellant is not required to file a reply. The examiner issues the application or *ex parte* reexamination certificate on the claims which stand allowed.

As the examiner did not follow the provisions of MPEP 1214.06(II), the Notice of Abandonment mailed 30 March 2010 is withdrawn as premature.

General inquiries relating to this decision should be directed to Robert DeWitty, Petitions Examiner, Office of Petitions (571-272-6051), or, if unavailable, the undersigned at 571-272-7099.

The application is being referred to the Technology Center AU 1794 for further processing in accordance with the above decision.

David Bucci
Petitions Examiner
Office of Petitions

PTO/SB/66 (03-09)
Approved for use through 03/31/2012. OMB 0651-0016
U.S. Patent and Trademark Office: U.S. DEPARTMENT OF COMMERCE
Under the Paperwork Reduction Act of 1995, no persons are required to respond to a collection of information unless it displays valid OMB control number.

PETITION TO ACCEPT UNINTENTIONALLY DELAYED PAYMENT OF MAINTENANCE FEE IN AN EXPIRED PATENT (37 CFR 1.378(c))

Patent Number	Issue Date (YYYY-MM-DD)	Application Number	Filing Date (YYYY-MM-DD)	Docket Number (if applicable)
6948471	2005-09-27	10708728	2004-03-20	27006-00078

CAUTION: Maintenance fee (and surcharge, if any) payment must correctly identify: (1) the patent number and (2) the application number of the actual U.S. application leading to issuance of that patent to ensure the fee(s) is/are associated with the correct patent. 37 CFR 1.366(c) and (d).

SMALL ENTITY
☐ Patentee claims, or has previously claimed, small entity status. See 37 CFR 1.27.

LOSS OF ENTITLEMENT TO SMALL ENTITY STATUS
☐ Patentee is no longer entitled to small entity status. See 37 CFR 1.27(g)

NOT Small Entity			Small Entity		
	Fee	Code		Fee	Code
◉	3 ½ year	(1551)	◯	3 ½ year	(2551)
◯	7 ½ year	(1552)	◯	7 ½ year	(2552)
◯	11 ½ year	(1553)	◯	11 ½ year	(2553)

SURCHARGE
The surcharge required by 37 CFR 1.20(i)(2) (Fee Code 1558) must be paid as a condition of accepting unintentionally delayed payment of the maintenance fee.

MAINTENANCE FEE (37 CFR 1.20(e)-(g))
The appropriate maintenance fee must be submitted with this petition.

STATEMENT
THE UNDERSIGNED CERTIFIES THAT THE DELAY IN PAYMENT OF THE MAINTENANCE FEE TO THIS PATENT WAS UNINTENTIONAL

PETITIONER(S) REQUEST THAT THE DELAYED PAYMENT OF THE MAINTENANCE FEE BE ACCEPTED AND THE PATENT REINSTATED

THIS PORTION MUST BE COMPLETED BY THE SIGNATORY OR SIGNATORIES

37 CFR 1.378(d) states: "Any petition under this section must be signed by an attorney or agent registered to practice before the Patent and Trademark Office, or by the patentee, the assignee, or other party in interest."

I certify, in accordance with 37 CFR 1.4(d)(4) that I am

◉ An attorney or agent registered to practice before the Patent and Trademark Office

◯ A sole patentee

◯ A joint patentee; I certify that I am authorized to sign this submission on behalf of all the other patentees.

◯ A joint patentee; all of whom are signing this e-petition

◯ The assignee of record of the entire interest

Under the Paperwork Reduction Act of 1995, no persons are required to respond to a collection of information unless it displays valid OMB control number.

Patent Practitioner			
A signature of the applicant or representative is required in accordance with 37 CFR 1.33 and 10.18. Please see 37 CFR 1.4(d) for the form of the signature			
Signature	/Richard A. Jones/	Date (YYYY-MM-DD)	2010-12-10
Name	Richard A. Jones	Registration Number	39242

This collection of information is required by 37 CFR 1.378(c). The information is required to obtain or retain a benefit by the public which is to file (and by the USPTO to process) an application. Confidentiality is governed by 35 U.S.C. 122 and 37 CFR 1.11 and 1.14. This collection is estimated to take 1 hour to complete, including gathering, preparing, and submitting the completed application form to the USPTO. Time will vary depending upon the individual case. Any comments on the amount of time you require to complete this form and/ or suggestions for reducing this burden, should be sent to the Chief Information Officer, U.S. Patent and Trademark Office, U.S. Department of Commerce, P.O. Box 1450, Alexandria, VA 22313-1450. DO NOT SEND FEES OR COMPLETED FORMS TO THIS ADDRESS. **This form can only be used when in conjunction with EFS-Web. If this form is mailed to the USPTO, it may cause delays in reinstating the patent.**

Privacy Act Statement

The Privacy Act of 1974 (P.L. 93-579) requires that you be given certain information in connection with your submission of the attached form related to a patent application or patent. Accordingly, pursuant to the requirements of the Act, please be advised that: (1) the general authority for the collection of this information is 35 U.S.C. 2(b)(2); (2) furnishing of the information solicited is voluntary; and (3) the principal purpose for which the information is used by the U.S. Patent and Trademark Office is to process and/or examine your submission related to a patent application or patent. If you do not furnish the requested information, the U.S. Patent and Trademark Office may not be able to process and/or examine your submission, which may result in termination of proceedings or abandonment of the application or expiration of the patent.

The information provided by you in this form will be subject to the following routine uses:

1. The information on this form will be treated confidentially to the extent allowed under the Freedom of Information Act (5 U.S.C. 552) and the Privacy Act (5 U.S.C. 552a). Records from this system of records may be disclosed to the Department of Justice to determine whether the Freedom of Information Act requires disclosure of these records.

2. A record from this system of records may be disclosed, as a routine use, in the course of presenting evidence to a court, magistrate, or administrative tribunal, including disclosures to opposing counsel in the course of settlement negotiations.

3. A record in this system of records may be disclosed, as a routine use, to a Member of Congress submitting a request involving an individual, to whom the record pertains, when the individual has requested assistance from the Member with respect to the subject matter of the record.

4. A record in this system of records may be disclosed, as a routine use, to a contractor of the Agency having need for the information in order to perform a contract. Recipients of information shall be required to comply with the requirements of the Privacy Act of 1974, as amended, pursuant to 5 U.S.C. 552a(m).

5. A record related to an International Application filed under the Patent Cooperation Treaty in this system of records may be disclosed, as a routine use, to the International Bureau of the World Intellectual Property Organization, pursuant to the Patent Cooperation Treaty.

6. A record in this system of records may be disclosed, as a routine use, to another federal agency for purposes of National Security review (35 U.S.C. 181) and for review pursuant to the Atomic Energy Act (42 U.S.C. 218(c)).

7. A record from this system of records may be disclosed, as a routine use, to the Administrator, General Services, or his/her designee, during an inspection of records conducted by GSA as part of that agency's responsibility to recommend improvements in records management practices and programs, under authority of 44 U.S.C. 2904 and 2906. Such disclosure shall be made in accordance with the GSA regulations governing inspection of records for this purpose, and any other relevant (i.e., GSA or Commerce) directive. Such disclosure shall not be used to make determinations about individuals.

8. A record from this system of records may be disclosed, as a routine use, to the public after either publication of the application pursuant to 35 U.S.C. 122(b) or issuance of a patent pursuant to 35 U.S.C. 151. Further, a record may be disclosed, subject to the limitations of 37 CFR 1.14, as a routine use, to the public if the record was filed in an application which became abandoned or in which the proceedings were terminated and which application is referenced by either a published application, an application open to public inspections or an issued patent.

9. A record from this system of records may be disclosed, as a routine use, to a Federal, State, or local law enforcement agency, if the USPTO becomes aware of a violation or potential violation of law or regulation.

UNITED STATES PATENT AND TRADEMARK OFFICE

Commissioner for Patents
United States Patent and Trademark Office
P.O. Box 1450
Alexandria, VA 22313-1450
www.uspto.gov

In re Patent No. 6948471
Issue Date: September 27,2005
Application No. 10708728
Filed: March 20,2004
Attorney Docket No. SIMTEK6877

:
:DECISION GRANTING PETITION
:UNDER 37 CFR 1.378(c)
:

This is a decision on the electronic petition, filed December 10,2010 ,under 37 CFR 1.378(c) to accept the unintentionally delayed payment of the 3.5 year maintenance fee for the above-identified patent.

The petition is **GRANTED**.

The maintenance fee is accepted, and the above-identified patent reinstated as of December 10,2010 . This decision also constitutes notice that the fee has been accepted. An electronic copy of the petition and this decision has been created as an entry in the Image File Wrapper. Nevertheless, petitioner should print and retain an independent copy.

Telephone inquiries related to this electronic decision should be directed to the Electronic Business Center at 1-866-217-9197.

UNITED STATES PATENT AND TRADEMARK OFFICE

UNITED STATES DEPARTMENT OF COMMERCE
United States Patent and Trademark Office
Address: COMMISSIONER FOR PATENTS
P.O. Box 1450
Alexandria, Virginia 22313-1450
www.uspto.gov

APPLICATION NO.	FILING DATE	FIRST NAMED INVENTOR	ATTORNEY DOCKET NO.	CONFIRMATION NO.
10/708,897	03/30/2004	Bruce W. Tryon	5704.00209	2896

26659 7590 09/20/2010
RAGGIO & DINNIN, P.C.
2701 CAMBRIDGE COURT, STE. 410
AUBURN HILLS, MI 48326

EXAMINER
BEHNCKE, CHRISTINE M

ART UNIT	PAPER NUMBER
3661	

MAIL DATE	DELIVERY MODE
09/20/2010	PAPER

Please find below and/or attached an Office communication concerning this application or proceeding.

The time period for reply, if any, is set in the attached communication.

UNITED STATES PATENT AND TRADEMARK OFFICE

Commissioner for Patents
United States Patent and Trademark Office
P.O. Box 1450
Alexandria, VA 22313-1450
www.uspto.gov

SEP 20 2010

RAGGIO & DINNIN, P.C.
2701 CAMBRIDGE COURT, STE. 410
AUBURN HILLS MI 48326

In re Application of	:	
Bruce W. Tryon	:	DECISION ON PETITION
Application No. 10/708,897	:	UNDER 37 CFR §1.181
Filed: March 30, 2004	:	
For: HYBRID ELECTRIC VEHICLE ENERGY	:	
MANAGEMENT SYSTEM	:	

This is a decision on applicant's petition under 37 CFR 1.181 filed July 16, 2008 requesting withdrawal of the finality of the Office action mailed April 16, 2008.

The petition is **DISMISSED AS MOOT.**

Applicant alleges that the finality of the April 16, 2008 Office action was premature as the amendment of claim 23 does not necessitated the new ground of rejection. Applicant asserts that claim 23 was rewritten in independent form to include all the limitations of claims 22 and 12 upon which claim 23 depended, and a new limitation that provides proper antecedent basis for the operation of shutting off fuel flow to the power generator. The new limitation in claim 23 was added for the purpose of improving the claim's clarity.

A review of the file record shows that a non-final Office action was mailed on October 18, 2007 in which the elected claims 12-23 and 47 were rejected. Applicant filed a response on January 21, 2008 amending claims 12, 13, 16, 18-23 and 47, cancelling claims 15 and arguing the rejection. The examiner issued a final Office action on April 16, 2008 again rejecting all the elected claims. Applicant timely filed this petition on July 16, 2008. The examiner withdrew the April 16, 2008 final Office action and issued a non-final Office action on October 20, 2008.

As the corrective action has been made, the issue raised in the petition is now moot.

Any questions regarding this decision should be directed to Supervisory Patent Examiner Thomas Black at (571) 272-6956.

Katherine Matecki

Katherine Matecki, Director
Patent Technology Center 3600
Telephone No.: (571)-272-5250

tb/lm: 8/26/10

LM

UNITED STATES PATENT AND TRADEMARK OFFICE

Commissioner for Patents
United States Patent and Trademark Office
P.O. Box 1450
Alexandria, VA 22313-1450
www.uspto.gov

In re Patent No. 7049189
Issue Date: May 23,2006
Application No. 10708904
Filed: March 31,2004
Attorney Docket No. 12694-US-PA

:
:DECISION GRANTING PETITION
:UNDER 37 CFR 1.378(c)
:

This is a decision on the electronic petition, filed April 3,2012 ,under 37 CFR 1.378(c) to accept the unintentionally delayed payment of the 3.5 year maintenance fee for the above-identified patent.

The petition is **GRANTED**.

The maintenance fee is accepted, and the above-identified patent reinstated as of April 3,2012 .
This decision also constitutes notice that the fee has been accepted. An electronic copy of the petition and this decision has been created as an entry in the Image File Wrapper. Nevertheless, petitioner should print and retain an independent copy.

Telephone inquiries related to this electronic decision should be directed to the Electronic Business Center at 1-866-217-9197.

PTO/SB/66 (03-09)
Approved for use through 03/31/2012. OMB 0651-0016
U.S. Patent and Trademark Office: U.S. DEPARTMENT OF COMMERCE
Under the Paperwork Reduction Act of 1995, no persons are required to respond to a collection of information unless it displays valid OMB control number.

PETITION TO ACCEPT UNINTENTIONALLY DELAYED PAYMENT OF MAINTENANCE FEE IN AN EXPIRED PATENT (37 CFR 1.378(c))

Patent Number	Issue Date (YYYY-MM-DD)	Application Number	Filing Date (YYYY-MM-DD)	Docket Number (if applicable)
7,049,189	2006-05-23	10/708,904	2004-03-31	LKSP0121USA

CAUTION: Maintenance fee (and surcharge, if any) payment must correctly identify: (1) the patent number and (2) the application number of the actual U.S. application leading to issuance of that patent to ensure the fee(s) is/are associated with the correct patent. 37 CFR 1.366(c) and (d).

SMALL ENTITY
☐ Patentee claims, or has previously claimed, small entity status. See 37 CFR 1.27.

LOSS OF ENTITLEMENT TO SMALL ENTITY STATUS
☐ Patentee is no longer entitled to small entity status. See 37 CFR 1.27(g)

NOT Small Entity			Small Entity		
	Fee	Code		Fee	Code
◉	3 ½ year	(1551)	○	3 ½ year	(2551)
○	7 ½ year	(1552)	○	7 ½ year	(2552)
○	11 ½ year	(1553)	○	11 ½ year	(2553)

SURCHARGE
The surcharge required by 37 CFR 1.20(i)(2) (Fee Code 1558) must be paid as a condition of accepting unintentionally delayed payment of the maintenance fee.

MAINTENANCE FEE (37 CFR 1.20(e)-(g))
The appropriate maintenance fee must be submitted with this petition.

STATEMENT
THE UNDERSIGNED CERTIFIES THAT THE DELAY IN PAYMENT OF THE MAINTENANCE FEE TO THIS PATENT WAS UNINTENTIONAL

PETITIONER(S) REQUEST THAT THE DELAYED PAYMENT OF THE MAINTENANCE FEE BE ACCEPTED AND THE PATENT REINSTATED

THIS PORTION MUST BE COMPLETED BY THE SIGNATORY OR SIGNATORIES

37 CFR 1.378(d) states: "Any petition under this section must be signed by an attorney or agent registered to practice before the Patent and Trademark Office, or by the patentee, the assignee, or other party in interest."

I certify, in accordance with 37 CFR 1.4(d)(4) that I am

◉ An attorney or agent registered to practice before the Patent and Trademark Office

○ A sole patentee

○ A joint patentee; I certify that I am authorized to sign this submission on behalf of all the other patentees.

○ A joint patentee; all of whom are signing this e-petition

○ The assignee of record of the entire interest

Under the Paperwork Reduction Act of 1995, no persons are required to respond to a collection of information unless it displays valid OMB control number.

Patent Practitioner			
A signature of the applicant or representative is required in accordance with 37 CFR 1.33 and 10.18. Please see 37 CFR 1.4(d) for the form of the signature			
Signature	/Winston Hsu/	Date (YYYY-MM-DD)	2012-04-03
Name	Winston Hsu	Registration Number	41526

This collection of information is required by 37 CFR 1.378(c). The information is required to obtain or retain a benefit by the public which is to file (and by the USPTO to process) an application. Confidentiality is governed by 35 U.S.C. 122 and 37 CFR 1.11 and 1.14. This collection is estimated to take 1 hour to complete, including gathering, preparing, and submitting the completed application form to the USPTO. Time will vary depending upon the individual case. Any comments on the amount of time you require to complete this form and/ or suggestions for reducing this burden, should be sent to the Chief Information Officer, U.S. Patent and Trademark Office, U.S. Department of Commerce, P.O. Box 1450, Alexandria, VA 22313-1450. DO NOT SEND FEES OR COMPLETED FORMS TO THIS ADDRESS. **This form can only be used when in conjunction with EFS-Web. If this form is mailed to the USPTO, it may cause delays in reinstating the patent.**

Privacy Act Statement

The Privacy Act of 1974 (P.L. 93-579) requires that you be given certain information in connection with your submission of the attached form related to a patent application or patent. Accordingly, pursuant to the requirements of the Act, please be advised that: (1) the general authority for the collection of this information is 35 U.S.C. 2(b)(2); (2) furnishing of the information solicited is voluntary; and (3) the principal purpose for which the information is used by the U.S. Patent and Trademark Office is to process and/or examine your submission related to a patent application or patent. If you do not furnish the requested information, the U.S. Patent and Trademark Office may not be able to process and/or examine your submission, which may result in termination of proceedings or abandonment of the application or expiration of the patent.

The information provided by you in this form will be subject to the following routine uses:

1. The information on this form will be treated confidentially to the extent allowed under the Freedom of Information Act (5 U.S.C. 552) and the Privacy Act (5 U.S.C. 552a). Records from this system of records may be disclosed to the Department of Justice to determine whether the Freedom of Information Act requires disclosure of these records.

2. A record from this system of records may be disclosed, as a routine use, in the course of presenting evidence to a court, magistrate, or administrative tribunal, including disclosures to opposing counsel in the course of settlement negotiations.

3. A record in this system of records may be disclosed, as a routine use, to a Member of Congress submitting a request involving an individual, to whom the record pertains, when the individual has requested assistance from the Member with respect to the subject matter of the record.

4. A record in this system of records may be disclosed, as a routine use, to a contractor of the Agency having need for the information in order to perform a contract. Recipients of information shall be required to comply with the requirements of the Privacy Act of 1974, as amended, pursuant to 5 U.S.C. 552a(m).

5. A record related to an International Application filed under the Patent Cooperation Treaty in this system of records may be disclosed, as a routine use, to the International Bureau of the World Intellectual Property Organization, pursuant to the Patent Cooperation Treaty.

6. A record in this system of records may be disclosed, as a routine use, to another federal agency for purposes of National Security review (35 U.S.C. 181) and for review pursuant to the Atomic Energy Act (42 U.S.C. 218(c)).

7. A record from this system of records may be disclosed, as a routine use, to the Administrator, General Services, or his/her designee, during an inspection of records conducted by GSA as part of that agency's responsibility to recommend improvements in records management practices and programs, under authority of 44 U.S.C. 2904 and 2906. Such disclosure shall be made in accordance with the GSA regulations governing inspection of records for this purpose, and any other relevant (i.e., GSA or Commerce) directive. Such disclosure shall not be used to make determinations about individuals.

8. A record from this system of records may be disclosed, as a routine use, to the public after either publication of the application pursuant to 35 U.S.C. 122(b) or issuance of a patent pursuant to 35 U.S.C. 151. Further, a record may be disclosed, subject to the limitations of 37 CFR 1.14, as a routine use, to the public if the record was filed in an application which became abandoned or in which the proceedings were terminated and which application is referenced by either a published application, an application open to public inspections or an issued patent.

9. A record from this system of records may be disclosed, as a routine use, to a Federal, State, or local law enforcement agency, if the USPTO becomes aware of a violation or potential violation of law or regulation.

UNITED STATES PATENT AND TRADEMARK OFFICE

Commissioner for Patents
United States Patent and Trademark Office
P.O. Box 1450
Alexandria, VA 22313-1450
www.uspto.gov

PHILIP S. JOHNSON
JOHNSON & JOHNSON
ONE JOHNSON & JOHNSON PLAZA
NEW BRUNSWICK NJ 08933-7003

MAILED
AUG 19 2011
OFFICE OF PETITIONS

In re Application of	:	
Boomer et al.	:	
Patent Number: 7909852	:	LETTER AND
Issue Date: 03/22/2011	:	NOTICE OF
Application No. 10/708919	:	ABANDONMENT
Filing or 371(c) Date: 03/31/2004	:	
Attorney Docket Number: 101896-0241	:	

This letter is in response to the petition filed on May 22, 2011, requesting that the patent term adjustment indicated on the above-identified patent be corrected to indicate that the term of the above-identified patent is extended or adjusted by fifty-five (55) days.

A review of Office records reveals that the Office mailed a final Office action on February 19, 2010. No reply to the final Office action was filed[1].

In view of the foregoing, the application is abandoned.

Applicant must revive the application before consideration of the request for reconsideration of patent term adjustment.

Telephone inquiries specific to this matter should be directed to the undersigned at (571) 272-3232.

/DLW/

Derek L. Woods
Attorney
Office of Petitions

[1] The Office notes 37 CFR 1.133(b), which states in relevant part, that "[a]n interview does not remove the necessity for reply to Office actions as specified in §§ 1.111 and 1.135."

UNITED STATES PATENT AND TRADEMARK OFFICE

Commissioner for Patents
United States Patent and Trademark Office
P.O. Box 1450
Alexandria, VA 22313-1450
www.uspto.gov

MAILED
SEP 16 2011
OFFICE OF PETITIONS

PHILIP S. JOHNSON
JOHNSON & JOHNSON
ONE JOHNSON & JOHNSON PLAZA
NEW BRUNSWICK NJ 08933-7003

In re Application of	:	DECISION ON
Boomer et al.	:	PETITION AND
Patent Number: 7909852	:	LETTER VACATING
Issue Date: 03/22/2011	:	NOTICE OF
Application No. 10/708919	:	ABANDONMENT
Filing or 371(c) Date: 03/31/2004	:	
Attorney Docket Number: 101896-0241	:	

This letter is in response to the Petition Pursuant to 37 CFR § 1.181 and Response to Letter and Notice of Abandonment, filed August 31, 2011, requesting withdrawal of the holding of abandonment.

The petition is granted to the extent that the holding of abandonment is hereby **vacated**.

A review of Office records reveals that the Office mailed a final Office action on February 19, 2010. No reply to the final Office action was filed.

Petitioner files the present petition and avers that in view of applicants authorization of the Office to make an amendment to the application to place it in condition for allowance, accompanied by an authorization for the examiner to charge any fees, including any extension of time fees to applicant's deposit account, no abandonment of the application occurred.

Office records confirm that applicants authorized the Office to make an amendment to the application to place it in condition for allowance, and also authorized the examiner to charge any fees, including any extension of time fees to applicant's deposit account.

In view of the foregoing, Notice of Abandonment is hereby vacated.

Telephone inquiries specific to this matter should be directed to the undersigned at (571) 272-3232.

/DLW/

Derek L. Woods
Attorney
Office of Petitions

UNITED STATES PATENT AND TRADEMARK OFFICE

Commissioner for Patents
United States Patent and Trademark Office
P.O. Box 1450
Alexandria, VA 22313-1450
www.uspto.gov

MAILED
SEP 19 2011
OFFICE OF PETITIONS

PHILIP S. JOHNSON
JOHNSON & JOHNSON
ONE JOHNSON & JOHNSON PLAZA
NEW BRUNSWICK NJ 08933-7003

In re Application of	:	
Boomer et al.	:	
Patent Number: 7909852	:	ON REQUEST FOR
Issue Date: 03/22/2011	:	RECONSIDERATION OF
Application No. 10/708919	:	PATENT TERM ADJUSTMENT
Filing or 371(c) Date: 03/31/2004	:	
Attorney Docket Number: 101896-0241	:	

This decision is in response to the petition filed on May 22, 2011, requesting that the patent term adjustment indicated on the above-identified patent be corrected to indicate that the term of the above-identified patent is extended or adjusted by fifty-five (55) days.

The petition to correct the patent term adjustment indicated on the above-identified patent to indicate that the term of the above-identified patent is extended or adjusted by fifty-five (55) days is **GRANTED**.

The Office acknowledges submission of the $200.00 fee set forth in 37 CFR 1.18(e). No additional fees are required[1].

[1] Regarding Patentee's request for waiver of the fee, Patentee is advised that the fee is a prerequisite prior to treatment on the merits of any application for patent term adjustment. 35 U.S.C. 41(d) authorizes the Office to establish a fee to recover the estimated average cost of treating applications for patent term adjustment (as well as a fee for treating a request for reinstatement of patent term adjustment), and the cost of treating an application for patent term adjustment is about the same regardless of whether the Office's initial determination of patent term adjustment indicated in the notice of allowance is correct. Even when the application for patent term adjustment is correct, refunding the fee would require the Office to raise the fee set forth in § 1.18(e) (to enable the Office to recover the same aggregate amount); and (2) add further complication to a review process that must take place in a limited period of time. The request for a refund is, therefore, dismissed. See, Changes to Implement Patent Term Adjustment Under Twenty-Year Patent Term; Final Rule, 65 Fed. Reg. 56,366, 53,374 (September 18, 2000), 1239 Off. Gaz. Pat. Office 14 (October 3, 2000):

The application is being forwarded to the Certificates of Branch for issuance of a certificate of correction. The Office will issue a certificate of correction indicating that the term of the above-identified patent is extended or adjusted by **fifty-five (55) days**.

Telephone inquiries specific to this matter should be directed to the undersigned at (571) 272-3232.

/DLW/

Derek L. Woods
Attorney
Office of Petitions
Office of the Deputy Commissioner
for Patent Examination Policy

Enclosure: Copy of DRAFT Certificate of Correction

UNITED STATES PATENT AND TRADEMARK OFFICE

CERTIFICATE OF CORRECTION

PATENT : 7,909,852 B2

DATED : **March 22, 2011**

INVENTOR(S) : Boomer et al.

It is certified that error appears in the above-identified patent and that said Letters Patent is hereby corrected as shown below:

On the cover page,

[*] Notice: Subject to any disclaimer, the term of this patent is extended or adjusted under 35 USC 154(b) by 0 days.

Delete the phrase "by 0 days" and insert – by 55 days--

UNITED STATES PATENT AND TRADEMARK OFFICE

Commissioner for Patents
United States Patent and Trademark Office
P.O. Box 1450
Alexandria, VA 22313-1450
www.uspto.gov

In re Patent No. 7028433
Issue Date: April 18,2006
Application No. 10708944
Filed: April 2,2004
Attorney Docket No. LKSP0031USA

:
:DECISION GRANTING PETITION
:UNDER 37 CFR 1.378(c)
:

This is a decision on the electronic petition, filed April 3,2012 ,under 37 CFR 1.378(c) to accept the unintentionally delayed payment of the 3.5 year maintenance fee for the above-identified patent.

The petition is **GRANTED**.

The maintenance fee is accepted, and the above-identified patent reinstated as of April 3,2012 .
This decision also constitutes notice that the fee has been accepted. An electronic copy of the petition and this decision has been created as an entry in the Image File Wrapper. Nevertheless, petitioner should print and retain an independent copy.

Telephone inquiries related to this electronic decision should be directed to the Electronic Business Center at 1-866-217-9197.

PTO/SB/66 (03-09)
Approved for use through 03/31/2012. OMB 0651-0016
U.S. Patent and Trademark Office: U.S. DEPARTMENT OF COMMERCE
Under the Paperwork Reduction Act of 1995, no persons are required to respond to a collection of information unless it displays valid OMB control number.

PETITION TO ACCEPT UNINTENTIONALLY DELAYED PAYMENT OF MAINTENANCE FEE IN AN EXPIRED PATENT (37 CFR 1.378(c))

Patent Number	Issue Date (YYYY-MM-DD)	Application Number	Filing Date (YYYY-MM-DD)	Docket Number (if applicable)
7,028,433	2006-04-18	10/708,944	2004-04-02	LKSP0031USA

CAUTION: Maintenance fee (and surcharge, if any) payment must correctly identify: (1) the patent number and (2) the application number of the actual U.S. application leading to issuance of that patent to ensure the fee(s) is/are associated with the correct patent. 37 CFR 1.366(c) and (d).

SMALL ENTITY
☐ Patentee claims, or has previously claimed, small entity status. See 37 CFR 1.27.

LOSS OF ENTITLEMENT TO SMALL ENTITY STATUS
☐ Patentee is no longer entitled to small entity status. See 37 CFR 1.27(g)

NOT Small Entity			Small Entity		
	Fee	Code		Fee	Code
◉	3 ½ year	(1551)	○	3 ½ year	(2551)
○	7 ½ year	(1552)	○	7 ½ year	(2552)
○	11 ½ year	(1553)	○	11 ½ year	(2553)

SURCHARGE
The surcharge required by 37 CFR 1.20(i)(2) (Fee Code 1558) must be paid as a condition of accepting unintentionally delayed payment of the maintenance fee.

MAINTENANCE FEE (37 CFR 1.20(e)-(g))
The appropriate maintenance fee must be submitted with this petition.

STATEMENT
THE UNDERSIGNED CERTIFIES THAT THE DELAY IN PAYMENT OF THE MAINTENANCE FEE TO THIS PATENT WAS UNINTENTIONAL

PETITIONER(S) REQUEST THAT THE DELAYED PAYMENT OF THE MAINTENANCE FEE BE ACCEPTED AND THE PATENT REINSTATED

THIS PORTION MUST BE COMPLETED BY THE SIGNATORY OR SIGNATORIES

37 CFR 1.378(d) states: "Any petition under this section must be signed by an attorney or agent registered to practice before the Patent and Trademark Office, or by the patentee, the assignee, or other party in interest."

I certify, in accordance with 37 CFR 1.4(d)(4) that I am

◉ An attorney or agent registered to practice before the Patent and Trademark Office

○ A sole patentee

○ A joint patentee; I certify that I am authorized to sign this submission on behalf of all the other patentees.

○ A joint patentee; all of whom are signing this e-petition

○ The assignee of record of the entire interest

Under the Paperwork Reduction Act of 1995, no persons are required to respond to a collection of information unless it displays valid OMB control number.

Patent Practitioner			
A signature of the applicant or representative is required in accordance with 37 CFR 1.33 and 10.18. Please see 37 CFR 1.4(d) for the form of the signature			
Signature	/Winston Hsu/	Date (YYYY-MM-DD)	2012-04-03
Name	Winston Hsu	Registration Number	41526

This collection of information is required by 37 CFR 1.378(c). The information is required to obtain or retain a benefit by the public which is to file (and by the USPTO to process) an application. Confidentiality is governed by 35 U.S.C. 122 and 37 CFR 1.11 and 1.14. This collection is estimated to take 1 hour to complete, including gathering, preparing, and submitting the completed application form to the USPTO. Time will vary depending upon the individual case. Any comments on the amount of time you require to complete this form and/ or suggestions for reducing this burden, should be sent to the Chief Information Officer, U.S. Patent and Trademark Office, U.S. Department of Commerce, P.O. Box 1450, Alexandria, VA 22313-1450. DO NOT SEND FEES OR COMPLETED FORMS TO THIS ADDRESS. **This form can only be used when in conjunction with EFS-Web. If this form is mailed to the USPTO, it may cause delays in reinstating the patent.**

Privacy Act Statement

The Privacy Act of 1974 (P.L. 93-579) requires that you be given certain information in connection with your submission of the attached form related to a patent application or patent. Accordingly, pursuant to the requirements of the Act, please be advised that: (1) the general authority for the collection of this information is 35 U.S.C. 2(b)(2); (2) furnishing of the information solicited is voluntary; and (3) the principal purpose for which the information is used by the U.S. Patent and Trademark Office is to process and/or examine your submission related to a patent application or patent. If you do not furnish the requested information, the U.S. Patent and Trademark Office may not be able to process and/or examine your submission, which may result in termination of proceedings or abandonment of the application or expiration of the patent.

The information provided by you in this form will be subject to the following routine uses:

1. The information on this form will be treated confidentially to the extent allowed under the Freedom of Information Act (5 U.S.C. 552) and the Privacy Act (5 U.S.C. 552a). Records from this system of records may be disclosed to the Department of Justice to determine whether the Freedom of Information Act requires disclosure of these records.

2. A record from this system of records may be disclosed, as a routine use, in the course of presenting evidence to a court, magistrate, or administrative tribunal, including disclosures to opposing counsel in the course of settlement negotiations.

3. A record in this system of records may be disclosed, as a routine use, to a Member of Congress submitting a request involving an individual, to whom the record pertains, when the individual has requested assistance from the Member with respect to the subject matter of the record.

4. A record in this system of records may be disclosed, as a routine use, to a contractor of the Agency having need for the information in order to perform a contract. Recipients of information shall be required to comply with the requirements of the Privacy Act of 1974, as amended, pursuant to 5 U.S.C. 552a(m).

5. A record related to an International Application filed under the Patent Cooperation Treaty in this system of records may be disclosed, as a routine use, to the International Bureau of the World Intellectual Property Organization, pursuant to the Patent Cooperation Treaty.

6. A record in this system of records may be disclosed, as a routine use, to another federal agency for purposes of National Security review (35 U.S.C. 181) and for review pursuant to the Atomic Energy Act (42 U.S.C. 218(c)).

7. A record from this system of records may be disclosed, as a routine use, to the Administrator, General Services, or his/her designee, during an inspection of records conducted by GSA as part of that agency's responsibility to recommend improvements in records management practices and programs, under authority of 44 U.S.C. 2904 and 2906. Such disclosure shall be made in accordance with the GSA regulations governing inspection of records for this purpose, and any other relevant (i.e., GSA or Commerce) directive. Such disclosure shall not be used to make determinations about individuals.

8. A record from this system of records may be disclosed, as a routine use, to the public after either publication of the application pursuant to 35 U.S.C. 122(b) or issuance of a patent pursuant to 35 U.S.C. 151. Further, a record may be disclosed, subject to the limitations of 37 CFR 1.14, as a routine use, to the public if the record was filed in an application which became abandoned or in which the proceedings were terminated and which application is referenced by either a published application, an application open to public inspections or an issued patent.

9. A record from this system of records may be disclosed, as a routine use, to a Federal, State, or local law enforcement agency, if the USPTO becomes aware of a violation or potential violation of law or regulation.

UNITED STATES PATENT AND TRADEMARK OFFICE

Commissioner for Patents
United States Patent and Trademark Office
P.O. Box 1450
Alexandria, VA 22313-1450
www.uspto.gov

In re Patent No. 6904887
Issue Date: June 14,2005
Application No. 10708972
Filed: April 5,2004
Attorney Docket No. SIMTEK6885

:
:DECISION GRANTING PETITION
:UNDER 37 CFR 1.378(c)
:

This is a decision on the electronic petition, filed December 13,2010 ,under 37 CFR 1.378(c) to accept the unintentionally delayed payment of the 3.5 year maintenance fee for the above-identified patent.

The petition is **GRANTED**.

The maintenance fee is accepted, and the above-identified patent reinstated as of December 13,2010 . This decision also constitutes notice that the fee has been accepted. An electronic copy of the petition and this decision has been created as an entry in the Image File Wrapper. Nevertheless, petitioner should print and retain an independent copy.

Telephone inquiries related to this electronic decision should be directed to the Electronic Business Center at 1-866-217-9197.

PTO/SB/66 (03-09)
Approved for use through 03/31/2012. OMB 0651-0016
U.S. Patent and Trademark Office: U.S. DEPARTMENT OF COMMERCE
Under the Paperwork Reduction Act of 1995, no persons are required to respond to a collection of information unless it displays valid OMB control number.

PETITION TO ACCEPT UNINTENTIONALLY DELAYED PAYMENT OF MAINTENANCE FEE IN AN EXPIRED PATENT (37 CFR 1.378(c))

Patent Number	Issue Date (YYYY-MM-DD)	Application Number	Filing Date (YYYY-MM-DD)	Docket Number (if applicable)
6904887	2005-06-14	10708972	2004-04-05	27006-00080

CAUTION: Maintenance fee (and surcharge, if any) payment must correctly identify: (1) the patent number and (2) the application number of the actual U.S. application leading to issuance of that patent to ensure the fee(s) is/are associated with the correct patent. 37 CFR 1.366(c) and (d).

SMALL ENTITY
☐ Patentee claims, or has previously claimed, small entity status. See 37 CFR 1.27.

LOSS OF ENTITLEMENT TO SMALL ENTITY STATUS
☐ Patentee is no longer entitled to small entity status. See 37 CFR 1.27(g)

NOT Small Entity			Small Entity		
	Fee	Code		Fee	Code
◉	3 ½ year	(1551)	◯	3 ½ year	(2551)
◯	7 ½ year	(1552)	◯	7 ½ year	(2552)
◯	11 ½ year	(1553)	◯	11 ½ year	(2553)

SURCHARGE
The surcharge required by 37 CFR 1.20(i)(2) (Fee Code 1558) must be paid as a condition of accepting unintentionally delayed payment of the maintenance fee.

MAINTENANCE FEE (37 CFR 1.20(e)-(g))
The appropriate maintenance fee must be submitted with this petition.

STATEMENT
THE UNDERSIGNED CERTIFIES THAT THE DELAY IN PAYMENT OF THE MAINTENANCE FEE TO THIS PATENT WAS UNINTENTIONAL

PETITIONER(S) REQUEST THAT THE DELAYED PAYMENT OF THE MAINTENANCE FEE BE ACCEPTED AND THE PATENT REINSTATED

THIS PORTION MUST BE COMPLETED BY THE SIGNATORY OR SIGNATORIES

37 CFR 1.378(d) states: "Any petition under this section must be signed by an attorney or agent registered to practice before the Patent and Trademark Office, or by the patentee, the assignee, or other party in interest."

I certify, in accordance with 37 CFR 1.4(d)(4) that I am

◉ An attorney or agent registered to practice before the Patent and Trademark Office

◯ A sole patentee

◯ A joint patentee; I certify that I am authorized to sign this submission on behalf of all the other patentees.

◯ A joint patentee; all of whom are signing this e-petition

◯ The assignee of record of the entire interest

Under the Paperwork Reduction Act of 1995, no persons are required to respond to a collection of information unless it displays valid OMB control number.

Patent Practitioner			
A signature of the applicant or representative is required in accordance with 37 CFR 1.33 and 10.18. Please see 37 CFR 1.4(d) for the form of the signature			
Signature	/Richard A. Jones/	Date (YYYY-MM-DD)	2010-12-13
Name	Richard A. Jones	Registration Number	39242

This collection of information is required by 37 CFR 1.378(c). The information is required to obtain or retain a benefit by the public which is to file (and by the USPTO to process) an application. Confidentiality is governed by 35 U.S.C. 122 and 37 CFR 1.11 and 1.14. This collection is estimated to take 1 hour to complete, including gathering, preparing, and submitting the completed application form to the USPTO. Time will vary depending upon the individual case. Any comments on the amount of time you require to complete this form and/ or suggestions for reducing this burden, should be sent to the Chief Information Officer, U.S. Patent and Trademark Office, U.S. Department of Commerce, P.O. Box 1450, Alexandria, VA 22313-1450. DO NOT SEND FEES OR COMPLETED FORMS TO THIS ADDRESS. **This form can only be used when in conjunction with EFS-Web. If this form is mailed to the USPTO, it may cause delays in reinstating the patent.**

Privacy Act Statement

The Privacy Act of 1974 (P.L. 93-579) requires that you be given certain information in connection with your submission of the attached form related to a patent application or patent. Accordingly, pursuant to the requirements of the Act, please be advised that: (1) the general authority for the collection of this information is 35 U.S.C. 2(b)(2); (2) furnishing of the information solicited is voluntary; and (3) the principal purpose for which the information is used by the U.S. Patent and Trademark Office is to process and/or examine your submission related to a patent application or patent. If you do not furnish the requested information, the U.S. Patent and Trademark Office may not be able to process and/or examine your submission, which may result in termination of proceedings or abandonment of the application or expiration of the patent.

The information provided by you in this form will be subject to the following routine uses:

1. The information on this form will be treated confidentially to the extent allowed under the Freedom of Information Act (5 U.S.C. 552) and the Privacy Act (5 U.S.C. 552a). Records from this system of records may be disclosed to the Department of Justice to determine whether the Freedom of Information Act requires disclosure of these records.

2. A record from this system of records may be disclosed, as a routine use, in the course of presenting evidence to a court, magistrate, or administrative tribunal, including disclosures to opposing counsel in the course of settlement negotiations.

3. A record in this system of records may be disclosed, as a routine use, to a Member of Congress submitting a request involving an individual, to whom the record pertains, when the individual has requested assistance from the Member with respect to the subject matter of the record.

4. A record in this system of records may be disclosed, as a routine use, to a contractor of the Agency having need for the information in order to perform a contract. Recipients of information shall be required to comply with the requirements of the Privacy Act of 1974, as amended, pursuant to 5 U.S.C. 552a(m).

5. A record related to an International Application filed under the Patent Cooperation Treaty in this system of records may be disclosed, as a routine use, to the International Bureau of the World Intellectual Property Organization, pursuant to the Patent Cooperation Treaty.

6. A record in this system of records may be disclosed, as a routine use, to another federal agency for purposes of National Security review (35 U.S.C. 181) and for review pursuant to the Atomic Energy Act (42 U.S.C. 218(c)).

7. A record from this system of records may be disclosed, as a routine use, to the Administrator, General Services, or his/her designee, during an inspection of records conducted by GSA as part of that agency's responsibility to recommend improvements in records management practices and programs, under authority of 44 U.S.C. 2904 and 2906. Such disclosure shall be made in accordance with the GSA regulations governing inspection of records for this purpose, and any other relevant (i.e., GSA or Commerce) directive. Such disclosure shall not be used to make determinations about individuals.

8. A record from this system of records may be disclosed, as a routine use, to the public after either publication of the application pursuant to 35 U.S.C. 122(b) or issuance of a patent pursuant to 35 U.S.C. 151. Further, a record may be disclosed, subject to the limitations of 37 CFR 1.14, as a routine use, to the public if the record was filed in an application which became abandoned or in which the proceedings were terminated and which application is referenced by either a published application, an application open to public inspections or an issued patent.

9. A record from this system of records may be disclosed, as a routine use, to a Federal, State, or local law enforcement agency, if the USPTO becomes aware of a violation or potential violation of law or regulation.

UNITED STATES PATENT AND TRADEMARK OFFICE

Commissioner for Patents
United States Patent and Trademark Office
P.O. Box 1450
Alexandria, VA 22313-1450
www.uspto.gov

MAILED

JAN 19 2011

OFFICE OF PETITIONS

PERKINS COIE LLP
PATENT-SEA
P.O. BOX 1247
SEATTLE, WA 98111-1247

In re Patent No. 7,508,894	:	DECISION ON REQUEST
Hsiao	:	FOR
Issue Date: March 24, 2009	:	RECONSIDERATION OF
Application No. 10/709,022	:	PATENT TERM ADJUSTMENT
Filed: April 7, 2004	:	and
Atty Docket No. **320528626US4**	:	NOTICE OF INTENT TO ISSUE
	:	CERTIFICATE OF CORRECTION

This is a decision on the petition filed on March 27, 2009, which is being treated as a petition under 37 CFR 1.705(d) requesting that the patent term adjustment indicated on the above-identified patent be corrected to indicate that the term of the above-identified patent is extended or adjusted by one thousand, one hundred and fifty-three (1,153) days.

The petition to correct the patent term adjustment indicated on the above-identified patent to indicate that the term of the above-identified patent is extended or adjusted by one thousand one hundred and fifty-two (1,152) days is **GRANTED to the extent indicated herein.**

As the period from the filing date of the request for continued examination (RCE) to the issue date of the patent is not included in the "B" delay period, the over three year period begins on April 8, 2007, and ends on September 18, 2008, the day before the RCE was filed, and is 530 (not 531) days. See 35 U.S.C. 154(b)(1)(B)(i). As such, the patent term adjustment is 1,152 days, not 1,153 days.

Nothing in this decision shall be construed as a waiver of the requirement of 35 U.S.C. 154(b)(4) that any civil action by an applicant dissatisfied with a determination made by the Director under 35 U.S.C. 154(b)(3) be filed in the United States District Court for the District of Columbia within 180 days after the grant of the patent.

The Office will *sua sponte* issue a certificate of correction. Pursuant to 37 CFR 1.322, the Office will not issue a certificate of correction without first providing assignee or patentee an opportunity to be heard. Accordingly, patentees are given **one (1) month or thirty (30) days**, whichever is longer, from the mail date of this decision to respond. No extensions of time will be granted under § 1.136.

The Office is in receipt of $200.00 for the petition fee under 37 CFR 1.18(e). No additional fees are due.

The application is being forwarded to the Certificates of Corrections Branch for issuance of a certificate of correction. The Office will issue a certificate of correction indicating that the term of the above-identified patent is extended or adjusted by one thousand one hundred and fifty-two (1,152) days.

Telephone inquiries specific to this matter should be directed to the undersigned at (571) 272-3222.

/Kenya A. McLaughlin/

Kenya A. McLaughlin
Senior Petitions Attorney
Office of Petitions

Enclosure: Copy of DRAFT Certificate of Correction

DRAFT COPY

UNITED STATES PATENT AND TRADEMARK OFFICE

CERTIFICATE OF CORRECTION

PATENT : 7,508,894 B2

DATED : Mar. 24, 2009

INVENTOR(S) : Hsiao

It is certified that error appears in the above-identified patent and that said Letters Patent is hereby corrected as shown below:

On the cover page,

[*] Notice: Subject to any disclaimer, the term of this patent is extended or adjusted under 35 USC 154(b) by (773) days

Delete the phrase "by 773 days" and insert – by 1,152 days--

UNITED STATES PATENT AND TRADEMARK OFFICE

Commissioner for Patents
United States Patent and Trademark Office
P.O. Box 1450
Alexandria, VA 22313-1450
www.uspto.gov

In re Patent No. 7234196
Issue Date: June 26,2007
Application No. 10709335
Filed: April 29,2004
Attorney Docket No. 12777-US-PA

:
:DECISION GRANTING PETITION
:UNDER 37 CFR 1.378(c)
:

This is a decision on the electronic petition, filed April 9,2012 ,under 37 CFR 1.378(c) to accept the unintentionally delayed payment of the 3.5 year maintenance fee for the above-identified patent.

The petition is **GRANTED**.

The maintenance fee is accepted, and the above-identified patent reinstated as of April 9,2012 .
This decision also constitutes notice that the fee has been accepted. An electronic copy of the petition and this decision has been created as an entry in the Image File Wrapper. Nevertheless, petitioner should print and retain an independent copy.

Telephone inquiries related to this electronic decision should be directed to the Electronic Business Center at 1-866-217-9197.

PTO/SB/66 (03-09)
Approved for use through 03/31/2012. OMB 0651-0016
U.S. Patent and Trademark Office: U.S. DEPARTMENT OF COMMERCE
Under the Paperwork Reduction Act of 1995, no persons are required to respond to a collection of information unless it displays valid OMB control number.

PETITION TO ACCEPT UNINTENTIONALLY DELAYED PAYMENT OF MAINTENANCE FEE IN AN EXPIRED PATENT (37 CFR 1.378(c))

Patent Number	Issue Date (YYYY-MM-DD)	Application Number	Filing Date (YYYY-MM-DD)	Docket Number (if applicable)
7,234,196	2007-06-26	10/709,335	2004-04-29	LKSP0163USA

CAUTION: Maintenance fee (and surcharge, if any) payment must correctly identify: (1) the patent number and (2) the application number of the actual U.S. application leading to issuance of that patent to ensure the fee(s) is/are associated with the correct patent. 37 CFR 1.366(c) and (d).

SMALL ENTITY
☐ Patentee claims, or has previously claimed, small entity status. See 37 CFR 1.27.

LOSS OF ENTITLEMENT TO SMALL ENTITY STATUS
☐ Patentee is no longer entitled to small entity status. See 37 CFR 1.27(g)

NOT Small Entity			Small Entity		
	Fee	Code		Fee	Code
◉	3 ½ year	(1551)	○	3 ½ year	(2551)
○	7 ½ year	(1552)	○	7 ½ year	(2552)
○	11 ½ year	(1553)	○	11 ½ year	(2553)

SURCHARGE
The surcharge required by 37 CFR 1.20(i)(2) (Fee Code 1558) must be paid as a condition of accepting unintentionally delayed payment of the maintenance fee.

MAINTENANCE FEE (37 CFR 1.20(e)-(g))
The appropriate maintenance fee must be submitted with this petition.

STATEMENT
THE UNDERSIGNED CERTIFIES THAT THE DELAY IN PAYMENT OF THE MAINTENANCE FEE TO THIS PATENT WAS UNINTENTIONAL

PETITIONER(S) REQUEST THAT THE DELAYED PAYMENT OF THE MAINTENANCE FEE BE ACCEPTED AND THE PATENT REINSTATED

THIS PORTION MUST BE COMPLETED BY THE SIGNATORY OR SIGNATORIES

37 CFR 1.378(d) states: "Any petition under this section must be signed by an attorney or agent registered to practice before the Patent and Trademark Office, or by the patentee, the assignee, or other party in interest."

I certify, in accordance with 37 CFR 1.4(d)(4) that I am

◉ An attorney or agent registered to practice before the Patent and Trademark Office

○ A sole patentee

○ A joint patentee; I certify that I am authorized to sign this submission on behalf of all the other patentees.

○ A joint patentee; all of whom are signing this e-petition

○ The assignee of record of the entire interest

Under the Paperwork Reduction Act of 1995, no persons are required to respond to a collection of information unless it displays valid OMB control number.

Patent Practitioner			
A signature of the applicant or representative is required in accordance with 37 CFR 1.33 and 10.18. Please see 37 CFR 1.4(d) for the form of the signature			
Signature	/Winston Hsu/	Date (YYYY-MM-DD)	2012-04-09
Name	Winston Hsu	Registration Number	41526

This collection of information is required by 37 CFR 1.378(c). The information is required to obtain or retain a benefit by the public which is to file (and by the USPTO to process) an application. Confidentiality is governed by 35 U.S.C. 122 and 37 CFR 1.11 and 1.14. This collection is estimated to take 1 hour to complete, including gathering, preparing, and submitting the completed application form to the USPTO. Time will vary depending upon the individual case. Any comments on the amount of time you require to complete this form and/ or suggestions for reducing this burden, should be sent to the Chief Information Officer, U.S. Patent and Trademark Office, U.S. Department of Commerce, P.O. Box 1450, Alexandria, VA 22313-1450. DO NOT SEND FEES OR COMPLETED FORMS TO THIS ADDRESS. **This form can only be used when in conjunction with EFS-Web. If this form is mailed to the USPTO, it may cause delays in reinstating the patent.**

Privacy Act Statement

The Privacy Act of 1974 (P.L. 93-579) requires that you be given certain information in connection with your submission of the attached form related to a patent application or patent. Accordingly, pursuant to the requirements of the Act, please be advised that: (1) the general authority for the collection of this information is 35 U.S.C. 2(b)(2); (2) furnishing of the information solicited is voluntary; and (3) the principal purpose for which the information is used by the U.S. Patent and Trademark Office is to process and/or examine your submission related to a patent application or patent. If you do not furnish the requested information, the U.S. Patent and Trademark Office may not be able to process and/or examine your submission, which may result in termination of proceedings or abandonment of the application or expiration of the patent.

The information provided by you in this form will be subject to the following routine uses:

1. The information on this form will be treated confidentially to the extent allowed under the Freedom of Information Act (5 U.S.C. 552) and the Privacy Act (5 U.S.C. 552a). Records from this system of records may be disclosed to the Department of Justice to determine whether the Freedom of Information Act requires disclosure of these records.

2. A record from this system of records may be disclosed, as a routine use, in the course of presenting evidence to a court, magistrate, or administrative tribunal, including disclosures to opposing counsel in the course of settlement negotiations.

3. A record in this system of records may be disclosed, as a routine use, to a Member of Congress submitting a request involving an individual, to whom the record pertains, when the individual has requested assistance from the Member with respect to the subject matter of the record.

4. A record in this system of records may be disclosed, as a routine use, to a contractor of the Agency having need for the information in order to perform a contract. Recipients of information shall be required to comply with the requirements of the Privacy Act of 1974, as amended, pursuant to 5 U.S.C. 552a(m).

5. A record related to an International Application filed under the Patent Cooperation Treaty in this system of records may be disclosed, as a routine use, to the International Bureau of the World Intellectual Property Organization, pursuant to the Patent Cooperation Treaty.

6. A record in this system of records may be disclosed, as a routine use, to another federal agency for purposes of National Security review (35 U.S.C. 181) and for review pursuant to the Atomic Energy Act (42 U.S.C. 218(c)).

7. A record from this system of records may be disclosed, as a routine use, to the Administrator, General Services, or his/her designee, during an inspection of records conducted by GSA as part of that agency's responsibility to recommend improvements in records management practices and programs, under authority of 44 U.S.C. 2904 and 2906. Such disclosure shall be made in accordance with the GSA regulations governing inspection of records for this purpose, and any other relevant (i.e., GSA or Commerce) directive. Such disclosure shall not be used to make determinations about individuals.

8. A record from this system of records may be disclosed, as a routine use, to the public after either publication of the application pursuant to 35 U.S.C. 122(b) or issuance of a patent pursuant to 35 U.S.C. 151. Further, a record may be disclosed, subject to the limitations of 37 CFR 1.14, as a routine use, to the public if the record was filed in an application which became abandoned or in which the proceedings were terminated and which application is referenced by either a published application, an application open to public inspections or an issued patent.

9. A record from this system of records may be disclosed, as a routine use, to a Federal, State, or local law enforcement agency, if the USPTO becomes aware of a violation or potential violation of law or regulation.

PTO/SB/66 (03-09)
Approved for use through 03/31/2012. OMB 0651-0016
U.S. Patent and Trademark Office: U.S. DEPARTMENT OF COMMERCE
Under the Paperwork Reduction Act of 1995, no persons are required to respond to a collection of information unless it displays valid OMB control number.

PETITION TO ACCEPT UNINTENTIONALLY DELAYED PAYMENT OF MAINTENANCE FEE IN AN EXPIRED PATENT (37 CFR 1.378(c))

Patent Number	Issue Date (YYYY-MM-DD)	Application Number	Filing Date (YYYY-MM-DD)	Docket Number (if applicable)
7,038,267	2006-05-02	10/709,372	2004-04-30	LKSP0118USA

CAUTION: Maintenance fee (and surcharge, if any) payment must correctly identify: (1) the patent number and (2) the application number of the actual U.S. application leading to issuance of that patent to ensure the fee(s) is/are associated with the correct patent. 37 CFR 1.366(c) and (d).

SMALL ENTITY
☐ Patentee claims, or has previously claimed, small entity status. See 37 CFR 1.27.

LOSS OF ENTITLEMENT TO SMALL ENTITY STATUS
☐ Patentee is no longer entitled to small entity status. See 37 CFR 1.27(g)

NOT Small Entity			Small Entity		
	Fee	Code		Fee	Code
◉	3 ½ year	(1551)	○	3 ½ year	(2551)
○	7 ½ year	(1552)	○	7 ½ year	(2552)
○	11 ½ year	(1553)	○	11 ½ year	(2553)

SURCHARGE
The surcharge required by 37 CFR 1.20(i)(2) (Fee Code 1558) must be paid as a condition of accepting unintentionally delayed payment of the maintenance fee.

MAINTENANCE FEE (37 CFR 1.20(e)-(g))
The appropriate maintenance fee must be submitted with this petition.

STATEMENT
THE UNDERSIGNED CERTIFIES THAT THE DELAY IN PAYMENT OF THE MAINTENANCE FEE TO THIS PATENT WAS UNINTENTIONAL

PETITIONER(S) REQUEST THAT THE DELAYED PAYMENT OF THE MAINTENANCE FEE BE ACCEPTED AND THE PATENT REINSTATED

THIS PORTION MUST BE COMPLETED BY THE SIGNATORY OR SIGNATORIES

37 CFR 1.378(d) states: "Any petition under this section must be signed by an attorney or agent registered to practice before the Patent and Trademark Office, or by the patentee, the assignee, or other party in interest."

I certify, in accordance with 37 CFR 1.4(d)(4) that I am

◉ An attorney or agent registered to practice before the Patent and Trademark Office

○ A sole patentee

○ A joint patentee; I certify that I am authorized to sign this submission on behalf of all the other patentees.

○ A joint patentee; all of whom are signing this e-petition

○ The assignee of record of the entire interest

Under the Paperwork Reduction Act of 1995, no persons are required to respond to a collection of information unless it displays valid OMB control number.

Patent Practitioner			
A signature of the applicant or representative is required in accordance with 37 CFR 1.33 and 10.18. Please see 37 CFR 1.4(d) for the form of the signature			
Signature	/Winston Hsu/	Date (YYYY-MM-DD)	2012-04-03
Name	Winston Hsu	Registration Number	41526

This collection of information is required by 37 CFR 1.378(c). The information is required to obtain or retain a benefit by the public which is to file (and by the USPTO to process) an application. Confidentiality is governed by 35 U.S.C. 122 and 37 CFR 1.11 and 1.14. This collection is estimated to take 1 hour to complete, including gathering, preparing, and submitting the completed application form to the USPTO. Time will vary depending upon the individual case. Any comments on the amount of time you require to complete this form and/ or suggestions for reducing this burden, should be sent to the Chief Information Officer, U.S. Patent and Trademark Office, U.S. Department of Commerce, P.O. Box 1450, Alexandria, VA 22313-1450. DO NOT SEND FEES OR COMPLETED FORMS TO THIS ADDRESS. **This form can only be used when in conjunction with EFS-Web. If this form is mailed to the USPTO, it may cause delays in reinstating the patent.**

Privacy Act Statement

The Privacy Act of 1974 (P.L. 93-579) requires that you be given certain information in connection with your submission of the attached form related to a patent application or patent. Accordingly, pursuant to the requirements of the Act, please be advised that: (1) the general authority for the collection of this information is 35 U.S.C. 2(b)(2); (2) furnishing of the information solicited is voluntary; and (3) the principal purpose for which the information is used by the U.S. Patent and Trademark Office is to process and/or examine your submission related to a patent application or patent. If you do not furnish the requested information, the U.S. Patent and Trademark Office may not be able to process and/or examine your submission, which may result in termination of proceedings or abandonment of the application or expiration of the patent.

The information provided by you in this form will be subject to the following routine uses:

1. The information on this form will be treated confidentially to the extent allowed under the Freedom of Information Act (5 U.S.C. 552) and the Privacy Act (5 U.S.C. 552a). Records from this system of records may be disclosed to the Department of Justice to determine whether the Freedom of Information Act requires disclosure of these records.

2. A record from this system of records may be disclosed, as a routine use, in the course of presenting evidence to a court, magistrate, or administrative tribunal, including disclosures to opposing counsel in the course of settlement negotiations.

3. A record in this system of records may be disclosed, as a routine use, to a Member of Congress submitting a request involving an individual, to whom the record pertains, when the individual has requested assistance from the Member with respect to the subject matter of the record.

4. A record in this system of records may be disclosed, as a routine use, to a contractor of the Agency having need for the information in order to perform a contract. Recipients of information shall be required to comply with the requirements of the Privacy Act of 1974, as amended, pursuant to 5 U.S.C. 552a(m).

5. A record related to an International Application filed under the Patent Cooperation Treaty in this system of records may be disclosed, as a routine use, to the International Bureau of the World Intellectual Property Organization, pursuant to the Patent Cooperation Treaty.

6. A record in this system of records may be disclosed, as a routine use, to another federal agency for purposes of National Security review (35 U.S.C. 181) and for review pursuant to the Atomic Energy Act (42 U.S.C. 218(c)).

7. A record from this system of records may be disclosed, as a routine use, to the Administrator, General Services, or his/her designee, during an inspection of records conducted by GSA as part of that agency's responsibility to recommend improvements in records management practices and programs, under authority of 44 U.S.C. 2904 and 2906. Such disclosure shall be made in accordance with the GSA regulations governing inspection of records for this purpose, and any other relevant (i.e., GSA or Commerce) directive. Such disclosure shall not be used to make determinations about individuals.

8. A record from this system of records may be disclosed, as a routine use, to the public after either publication of the application pursuant to 35 U.S.C. 122(b) or issuance of a patent pursuant to 35 U.S.C. 151. Further, a record may be disclosed, subject to the limitations of 37 CFR 1.14, as a routine use, to the public if the record was filed in an application which became abandoned or in which the proceedings were terminated and which application is referenced by either a published application, an application open to public inspections or an issued patent.

9. A record from this system of records may be disclosed, as a routine use, to a Federal, State, or local law enforcement agency, if the USPTO becomes aware of a violation or potential violation of law or regulation.

UNITED STATES PATENT AND TRADEMARK OFFICE

Commissioner for Patents
United States Patent and Trademark Office
P.O. Box 1450
Alexandria, VA 22313-1450
www.uspto.gov

In re Patent No. 7038267
Issue Date: May 2,2006
Application No. 10709372
Filed: April 30,2004
Attorney Docket No. 12409-US-PA

:
:DECISION GRANTING PETITION
:UNDER 37 CFR 1.378(c)
:

This is a decision on the electronic petition, filed April 3,2012 ,under 37 CFR 1.378(c) to accept the unintentionally delayed payment of the 3.5 year maintenance fee for the above-identified patent.

The petition is **GRANTED**.

The maintenance fee is accepted, and the above-identified patent reinstated as of April 3,2012 .
This decision also constitutes notice that the fee has been accepted. An electronic copy of the petition and this decision has been created as an entry in the Image File Wrapper. Nevertheless, petitioner should print and retain an independent copy.

Telephone inquiries related to this electronic decision should be directed to the Electronic Business Center at 1-866-217-9197.

PTO/SB/66 (03-09)
Approved for use through 03/31/2012. OMB 0651-0016
U.S. Patent and Trademark Office: U.S. DEPARTMENT OF COMMERCE
Under the Paperwork Reduction Act of 1995, no persons are required to respond to a collection of information unless it displays valid OMB control number.

PETITION TO ACCEPT UNINTENTIONALLY DELAYED PAYMENT OF MAINTENANCE FEE IN AN EXPIRED PATENT (37 CFR 1.378(c))

Patent Number	Issue Date (YYYY-MM-DD)	Application Number	Filing Date (YYYY-MM-DD)	Docket Number (if applicable)
6,972,260	2005-12-06	10/709,469	2004-05-07	LKSP0109USA

CAUTION: Maintenance fee (and surcharge, if any) payment must correctly identify: (1) the patent number and (2) the application number of the actual U.S. application leading to issuance of that patent to ensure the fee(s) is/are associated with the correct patent. 37 CFR 1.366(c) and (d).

SMALL ENTITY
☐ Patentee claims, or has previously claimed, small entity status. See 37 CFR 1.27.

LOSS OF ENTITLEMENT TO SMALL ENTITY STATUS
☐ Patentee is no longer entitled to small entity status. See 37 CFR 1.27(g)

NOT Small Entity			Small Entity		
	Fee	Code		Fee	Code
◉	3 ½ year	(1551)	○	3 ½ year	(2551)
○	7 ½ year	(1552)	○	7 ½ year	(2552)
○	11 ½ year	(1553)	○	11 ½ year	(2553)

SURCHARGE
The surcharge required by 37 CFR 1.20(i)(2) (Fee Code 1558) must be paid as a condition of accepting unintentionally delayed payment of the maintenance fee.

MAINTENANCE FEE (37 CFR 1.20(e)-(g))
The appropriate maintenance fee must be submitted with this petition.

STATEMENT
THE UNDERSIGNED CERTIFIES THAT THE DELAY IN PAYMENT OF THE MAINTENANCE FEE TO THIS PATENT WAS UNINTENTIONAL

PETITIONER(S) REQUEST THAT THE DELAYED PAYMENT OF THE MAINTENANCE FEE BE ACCEPTED AND THE PATENT REINSTATED

THIS PORTION MUST BE COMPLETED BY THE SIGNATORY OR SIGNATORIES

37 CFR 1.378(d) states: "Any petition under this section must be signed by an attorney or agent registered to practice before the Patent and Trademark Office, or by the patentee, the assignee, or other party in interest."

I certify, in accordance with 37 CFR 1.4(d)(4) that I am

◉ An attorney or agent registered to practice before the Patent and Trademark Office

○ A sole patentee

○ A joint patentee; I certify that I am authorized to sign this submission on behalf of all the other patentees.

○ A joint patentee; all of whom are signing this e-petition

○ The assignee of record of the entire interest

Under the Paperwork Reduction Act of 1995, no persons are required to respond to a collection of information unless it displays valid OMB control number.

Patent Practitioner			
A signature of the applicant or representative is required in accordance with 37 CFR 1.33 and 10.18. Please see 37 CFR 1.4(d) for the form of the signature			
Signature	/Winston Hsu/	Date (YYYY-MM-DD)	2011-12-02
Name	Winston Hsu	Registration Number	41526

This collection of information is required by 37 CFR 1.378(c). The information is required to obtain or retain a benefit by the public which is to file (and by the USPTO to process) an application. Confidentiality is governed by 35 U.S.C. 122 and 37 CFR 1.11 and 1.14. This collection is estimated to take 1 hour to complete, including gathering, preparing, and submitting the completed application form to the USPTO. Time will vary depending upon the individual case. Any comments on the amount of time you require to complete this form and/ or suggestions for reducing this burden, should be sent to the Chief Information Officer, U.S. Patent and Trademark Office, U.S. Department of Commerce, P.O. Box 1450, Alexandria, VA 22313-1450. DO NOT SEND FEES OR COMPLETED FORMS TO THIS ADDRESS. **This form can only be used when in conjunction with EFS-Web. If this form is mailed to the USPTO, it may cause delays in reinstating the patent.**

Privacy Act Statement

The Privacy Act of 1974 (P.L. 93-579) requires that you be given certain information in connection with your submission of the attached form related to a patent application or patent. Accordingly, pursuant to the requirements of the Act, please be advised that: (1) the general authority for the collection of this information is 35 U.S.C. 2(b)(2); (2) furnishing of the information solicited is voluntary; and (3) the principal purpose for which the information is used by the U.S. Patent and Trademark Office is to process and/or examine your submission related to a patent application or patent. If you do not furnish the requested information, the U.S. Patent and Trademark Office may not be able to process and/or examine your submission, which may result in termination of proceedings or abandonment of the application or expiration of the patent.

The information provided by you in this form will be subject to the following routine uses:

1. The information on this form will be treated confidentially to the extent allowed under the Freedom of Information Act (5 U.S.C. 552) and the Privacy Act (5 U.S.C. 552a). Records from this system of records may be disclosed to the Department of Justice to determine whether the Freedom of Information Act requires disclosure of these records.

2. A record from this system of records may be disclosed, as a routine use, in the course of presenting evidence to a court, magistrate, or administrative tribunal, including disclosures to opposing counsel in the course of settlement negotiations.

3. A record in this system of records may be disclosed, as a routine use, to a Member of Congress submitting a request involving an individual, to whom the record pertains, when the individual has requested assistance from the Member with respect to the subject matter of the record.

4. A record in this system of records may be disclosed, as a routine use, to a contractor of the Agency having need for the information in order to perform a contract. Recipients of information shall be required to comply with the requirements of the Privacy Act of 1974, as amended, pursuant to 5 U.S.C. 552a(m).

5. A record related to an International Application filed under the Patent Cooperation Treaty in this system of records may be disclosed, as a routine use, to the International Bureau of the World Intellectual Property Organization, pursuant to the Patent Cooperation Treaty.

6. A record in this system of records may be disclosed, as a routine use, to another federal agency for purposes of National Security review (35 U.S.C. 181) and for review pursuant to the Atomic Energy Act (42 U.S.C. 218(c)).

7. A record from this system of records may be disclosed, as a routine use, to the Administrator, General Services, or his/her designee, during an inspection of records conducted by GSA as part of that agency's responsibility to recommend improvements in records management practices and programs, under authority of 44 U.S.C. 2904 and 2906. Such disclosure shall be made in accordance with the GSA regulations governing inspection of records for this purpose, and any other relevant (i.e., GSA or Commerce) directive. Such disclosure shall not be used to make determinations about individuals.

8. A record from this system of records may be disclosed, as a routine use, to the public after either publication of the application pursuant to 35 U.S.C. 122(b) or issuance of a patent pursuant to 35 U.S.C. 151. Further, a record may be disclosed, subject to the limitations of 37 CFR 1.14, as a routine use, to the public if the record was filed in an application which became abandoned or in which the proceedings were terminated and which application is referenced by either a published application, an application open to public inspections or an issued patent.

9. A record from this system of records may be disclosed, as a routine use, to a Federal, State, or local law enforcement agency, if the USPTO becomes aware of a violation or potential violation of law or regulation.

UNITED STATES PATENT AND TRADEMARK OFFICE

Commissioner for Patents
United States Patent and Trademark Office
P.O. Box 1450
Alexandria, VA 22313-1450
www.uspto.gov

In re Patent No. 6972260
Issue Date: December 6,2005
Application No. 10709469
Filed: May 7,2004
Attorney Docket No. 12129-US-PA

:
:DECISION GRANTING PETITION
:UNDER 37 CFR 1.378(c)
:

This is a decision on the electronic petition, filed December 2,2011 ,under 37 CFR 1.378(c) to accept the unintentionally delayed payment of the 3.5 year maintenance fee for the above-identified patent.

The petition is **GRANTED**.

The maintenance fee is accepted, and the above-identified patent reinstated as of December 2,2011 . This decision also constitutes notice that the fee has been accepted. An electronic copy of the petition and this decision has been created as an entry in the Image File Wrapper. Nevertheless, petitioner should print and retain an independent copy.

Telephone inquiries related to this electronic decision should be directed to the Electronic Business Center at 1-866-217-9197.

UNITED STATES PATENT AND TRADEMARK OFFICE

Commissioner for Patents
United States Patent and Trademark Office
P.O. Box 1450
Alexandria, VA 22313-1450
www.uspto.gov

SAM HARWELL PATTERSON, II
1 LAS OLAS CIRCLE
APT. 211
FT. LAUDERDALE FL 33316

MAILED
OCT 08 2010
OFFICE OF PETITIONS

In re Application of
Brendan Roberts, et al.
Application No. 10/709,477
Filed: May 7, 2004

ON PETITION

This is a decision on the petition under the unintentional provisions of 37 CFR 1.137(b), filed September 17, 2010, to revive the above-identified application.

The petition is **DISMISSED**.

Any request for reconsideration of this decision must be submitted within TWO (2) MONTHS from the mail date of this decision. Extensions of time under 37 CFR 1.136(a) are permitted. The reconsideration request should include a cover letter entitled "Renewed Petition under 37 CFR 1.137(b)." This is **not** a final agency action within the meaning of 5 U.S.C. § 704.

The application became abandoned for failure to reply in a timely manner to the Notice of Non-Compliant Amendment, mailed December 12, 2007, which set a shortened statutory period for reply of one (1) month or thirty (30) days (whichever is later). No extensions of time under the provisions of 37 CFR 1.136(a) were obtained. Accordingly, the application became abandoned on January 13, 2008. The Notice of Abandonment was mailed October 31, 2008.

A grantable petition under 37 CFR 1.137(b) must be accompanied by: (1) the required reply, unless previously filed; (2) the petition fee as set forth in 37 CFR 1.17(m); (3) a statement that the entire delay in filing the required reply from the due date for the reply until the filing of a grantable petition pursuant to 37 CFR 1.137(b) was unintentional; and (4) any terminal disclaimer (and fee as set forth in 37 CFR 1.20(d)) required by 37 CFR 1.137(d). Where there is a question as to whether either the abandonment or the delay in filing a petition under 37 CFR 1.137 was unintentional, the Director may require additional information. See MPEP 711.03(c)(II)(C) and (D). The instant petition lacks item(s) (1) & (3).

Item 1:

The amendment filed herewith petition is still in non-compliance. Claim number(s) 31, 44, & 45 does not have any status identifiers.

Item 3:

The statement of delay is not acceptable. In this regard, petitioner's attention is directed to 37 CFR 1.33(b), which states.

(b) Amendments and other papers. Amendments and other papers, except for written assertions pursuant to § 1.27(c)(2)(ii) of this part, filed in the application must be signed by:
(1) A registered patent attorney or patent agent of record appointed in compliance with § 1.32(b);
(2) A registered patent attorney or patent agent not of record who acts in a representative capacity under the provisions of § 1.34;
(3) An assignee as provided for under §3.71(b) of this chapter; or
(4) All of the applicants (§ 1.41(b)) for patent, unless there is an assignee of the entire interest and such assignee has taken action in the application in accordance with § 3.71 of this chapter.

An unsigned amendment (or other paper) or one not properly signed by a person having authority to prosecute the application is not entered. This applies, for instance, where the amendment (or other paper) is signed by only one of two applicants and the one signing has not been given a power of attorney by the other applicant.

Therefore, as the petition is not signed by all the inventors and the record herein fails to disclose that petitioner herein (Sam Patterson) was ever given a power of attorney to act on behalf of inventor Brendan Roberts, or that he is an assignee of the entire interest and has complied with the provisions of 37 CFR 3.73(b), the petition is considered to not contain a proper statement of unintentional delay.

Further correspondence with respect to this matter should be addressed as follows:

By Mail: Mail Stop PETITION
Commissioner for Patents
P. O. Box 1450
Alexandria, VA 22313-1450

By hand: U. S. Patent and Trademark Office
Customer Service Window, Mail Stop Petitions
Randolph Building
401 Dulany Street
Alexandria, VA 22314

The centralized facsimile number is **(571) 273-8300.**

Telephone inquiries concerning this decision should be directed to the undersigned at (571) 272-2991.

/Terri Johnson/
Terri Johnson
Petitions Examiner
Office of Petitions

UNITED STATES PATENT AND TRADEMARK OFFICE

Commissioner for Patents
United States Patent and Trademark Office
P.O. Box 1450
Alexandria, VA 22313-1450
www.uspto.gov

MAILED

APR 11 2011

OFFICE OF PETITIONS

SAM HARWELL PATTERSON, II
2370 Tomoka Woods Parkway
De Leon Springs FL 32130

In re Application of
Brendan Roberts, et al.
Application No. 10/709,477
Filed: May 7, 2004

DECISION ON PETITION

This is a decision on the renewed petition under the unintentional provisions of 37 CFR 1.137(b), filed March 16, 2011 and resubmitted on March 22, 2011, to revive the above-identified application.

The petition is **GRANTED**.

The application became abandoned for failure to reply in a timely manner to the Notice of Non-Compliant Amendment, mailed December 12, 2007, which set a shortened statutory period for reply of one (1) month or thirty (30) days (whichever is later). No extensions of time under the provisions of 37 CFR 1.136(a) were obtained. Accordingly, the application became abandoned on January 13, 2008. The Notice of Abandonment was mailed October 31, 2008.

The petition satisfies the requirements of 37 CFR 1.137(b) in that petitioner has supplied (1) the reply in the form of an amendment, (2) the petition fee of $810, and (3) a proper statement of unintentional delay.

Telephone inquiries concerning this decision should be directed to Terri Johnson at (571) 272-2991.

This application is being referred to Technology Center AU 3764 for appropriate action by the Examiner in the normal course of business on the reply received.

/Terri Johnson/
Terri Johnson
Petitions Examiner
Office of Petitions

UNITED STATES PATENT AND TRADEMARK OFFICE

Commissioner for Patents
United States Patent and Trademark Office
P.O. Box 1450
Alexandria, VA 22313-1450
www.uspto.gov

ZEMAN-MULLEN & FORD, LLP
233 WHITE SPAR ROAD
PRESCOTT, AZ 86303

MAILED
MAY 18 2011
OFFICE OF PETITIONS

In re Application of :
Joe Stockwell :
Application No. 10/709,497 : DECISION ON PETITION
Filed: May 10, 2004 :
Attorney Docket No. 370150300 :

This is a decision on the petition under the unintentional provisions of 37 CFR 1.137(b), filed April 27, 2011, to revive the above-identified application.

This application became abandoned for failure to timely pay the issue and publication fees on or before July 6, 2010, as required by the Notice of Allowance and Fee(s) Due, mailed April 6, 2010. Accordingly, the date of abandonment of this application is July 7, 2010.

The petition satisfies the requirements of 37 CFR 1.137(b) in that petitioner has supplied (1) the reply in the form of payment of the issue fee of $755 and the publication fee of $300, (2) the petition fee of $810; and (3) a proper statement of unintentional delay.

In view of the above, the petition is **GRANTED**.

It is not apparent whether the statement of unintentional delay was signed by a person who would have been in a position of knowing that the entire delay in filing the required reply from the due date for the reply until the filing of a grantable petition pursuant to 37 CFR 1.137(b) was unintentional. Nevertheless, in accordance with 37 CFR 10.18, the statement is accepted as constituting a certification of unintentional delay. However, in the event that petitioner has no knowledge that the delay was unintentional, petitioner must make such an inquiry to ascertain that, in fact, the delay was unintentional. If petitioner discovers that the delay was intentional, petitioner must so notify the Office.

Telephone inquiries concerning this decision should be directed to undersigned at (571) 272-1642. All other inquires concerning this application should be directed tot eh Office of Data Management at their hotline 571-272-4200.

This application is being referred to the Office of Data Management for processing into a patent.

April M. Wise
Petitions Examiner
Office of Petitions

UNITED STATES PATENT AND TRADEMARK OFFICE

Commissioner for Patents
United States Patent and Trademark Office
P.O. Box 1450
Alexandria, VA 22313-1450
www.uspto.gov

In re Patent No. 7115214
Issue Date: October 3,2006
Application No. 10709552
Filed: May 13,2004
Attorney Docket No. LKSP0033USA

:
:DECISION GRANTING PETITION
:UNDER 37 CFR 1.378(c)
:

This is a decision on the electronic petition, filed April 9,2012 ,under 37 CFR 1.378(c) to accept the unintentionally delayed payment of the 3.5 year maintenance fee for the above-identified patent.

The petition is **GRANTED**.

The maintenance fee is accepted, and the above-identified patent reinstated as of April 9,2012 . This decision also constitutes notice that the fee has been accepted. An electronic copy of the petition and this decision has been created as an entry in the Image File Wrapper. Nevertheless, petitioner should print and retain an independent copy.

Telephone inquiries related to this electronic decision should be directed to the Electronic Business Center at 1-866-217-9197.

PTO/SB/66 (03-09)
Approved for use through 03/31/2012. OMB 0651-0016
U.S. Patent and Trademark Office: U.S. DEPARTMENT OF COMMERCE
Under the Paperwork Reduction Act of 1995, no persons are required to respond to a collection of information unless it displays valid OMB control number.

PETITION TO ACCEPT UNINTENTIONALLY DELAYED PAYMENT OF MAINTENANCE FEE IN AN EXPIRED PATENT (37 CFR 1.378(c))

Patent Number	Issue Date (YYYY-MM-DD)	Application Number	Filing Date (YYYY-MM-DD)	Docket Number (if applicable)
7,115,214	2006-10-03	10/709,552	2004-05-13	LKSP0033USA

CAUTION: Maintenance fee (and surcharge, if any) payment must correctly identify: (1) the patent number and (2) the application number of the actual U.S. application leading to issuance of that patent to ensure the fee(s) is/are associated with the correct patent. 37 CFR 1.366(c) and (d).

SMALL ENTITY
☐ Patentee claims, or has previously claimed, small entity status. See 37 CFR 1.27.

LOSS OF ENTITLEMENT TO SMALL ENTITY STATUS
☐ Patentee is no longer entitled to small entity status. See 37 CFR 1.27(g)

NOT Small Entity			Small Entity		
	Fee	Code		Fee	Code
◉	3 ½ year	(1551)	○	3 ½ year	(2551)
○	7 ½ year	(1552)	○	7 ½ year	(2552)
○	11 ½ year	(1553)	○	11 ½ year	(2553)

SURCHARGE
The surcharge required by 37 CFR 1.20(i)(2) (Fee Code 1558) must be paid as a condition of accepting unintentionally delayed payment of the maintenance fee.

MAINTENANCE FEE (37 CFR 1.20(e)-(g))
The appropriate maintenance fee must be submitted with this petition.

STATEMENT
THE UNDERSIGNED CERTIFIES THAT THE DELAY IN PAYMENT OF THE MAINTENANCE FEE TO THIS PATENT WAS UNINTENTIONAL

PETITIONER(S) REQUEST THAT THE DELAYED PAYMENT OF THE MAINTENANCE FEE BE ACCEPTED AND THE PATENT REINSTATED

THIS PORTION MUST BE COMPLETED BY THE SIGNATORY OR SIGNATORIES

37 CFR 1.378(d) states: "Any petition under this section must be signed by an attorney or agent registered to practice before the Patent and Trademark Office, or by the patentee, the assignee, or other party in interest."

I certify, in accordance with 37 CFR 1.4(d)(4) that I am

◉ An attorney or agent registered to practice before the Patent and Trademark Office

○ A sole patentee

○ A joint patentee; I certify that I am authorized to sign this submission on behalf of all the other patentees.

○ A joint patentee; all of whom are signing this e-petition

○ The assignee of record of the entire interest

Under the Paperwork Reduction Act of 1995, no persons are required to respond to a collection of information unless it displays valid OMB control number.

Patent Practitioner			
A signature of the applicant or representative is required in accordance with 37 CFR 1.33 and 10.18. Please see 37 CFR 1.4(d) for the form of the signature			
Signature	/Winston Hsu/	Date (YYYY-MM-DD)	2012-04-09
Name	Winston Hsu	Registration Number	41526

This collection of information is required by 37 CFR 1.378(c). The information is required to obtain or retain a benefit by the public which is to file (and by the USPTO to process) an application. Confidentiality is governed by 35 U.S.C. 122 and 37 CFR 1.11 and 1.14. This collection is estimated to take 1 hour to complete, including gathering, preparing, and submitting the completed application form to the USPTO. Time will vary depending upon the individual case. Any comments on the amount of time you require to complete this form and/ or suggestions for reducing this burden, should be sent to the Chief Information Officer, U.S. Patent and Trademark Office, U.S. Department of Commerce, P.O. Box 1450, Alexandria, VA 22313-1450. DO NOT SEND FEES OR COMPLETED FORMS TO THIS ADDRESS. **This form can only be used when in conjunction with EFS-Web. If this form is mailed to the USPTO, it may cause delays in reinstating the patent.**

Privacy Act Statement

The Privacy Act of 1974 (P.L. 93-579) requires that you be given certain information in connection with your submission of the attached form related to a patent application or patent. Accordingly, pursuant to the requirements of the Act, please be advised that: (1) the general authority for the collection of this information is 35 U.S.C. 2(b)(2); (2) furnishing of the information solicited is voluntary; and (3) the principal purpose for which the information is used by the U.S. Patent and Trademark Office is to process and/or examine your submission related to a patent application or patent. If you do not furnish the requested information, the U.S. Patent and Trademark Office may not be able to process and/or examine your submission, which may result in termination of proceedings or abandonment of the application or expiration of the patent.

The information provided by you in this form will be subject to the following routine uses:

1. The information on this form will be treated confidentially to the extent allowed under the Freedom of Information Act (5 U.S.C. 552) and the Privacy Act (5 U.S.C. 552a). Records from this system of records may be disclosed to the Department of Justice to determine whether the Freedom of Information Act requires disclosure of these records.

2. A record from this system of records may be disclosed, as a routine use, in the course of presenting evidence to a court, magistrate, or administrative tribunal, including disclosures to opposing counsel in the course of settlement negotiations.

3. A record in this system of records may be disclosed, as a routine use, to a Member of Congress submitting a request involving an individual, to whom the record pertains, when the individual has requested assistance from the Member with respect to the subject matter of the record.

4. A record in this system of records may be disclosed, as a routine use, to a contractor of the Agency having need for the information in order to perform a contract. Recipients of information shall be required to comply with the requirements of the Privacy Act of 1974, as amended, pursuant to 5 U.S.C. 552a(m).

5. A record related to an International Application filed under the Patent Cooperation Treaty in this system of records may be disclosed, as a routine use, to the International Bureau of the World Intellectual Property Organization, pursuant to the Patent Cooperation Treaty.

6. A record in this system of records may be disclosed, as a routine use, to another federal agency for purposes of National Security review (35 U.S.C. 181) and for review pursuant to the Atomic Energy Act (42 U.S.C. 218(c)).

7. A record from this system of records may be disclosed, as a routine use, to the Administrator, General Services, or his/her designee, during an inspection of records conducted by GSA as part of that agency's responsibility to recommend improvements in records management practices and programs, under authority of 44 U.S.C. 2904 and 2906. Such disclosure shall be made in accordance with the GSA regulations governing inspection of records for this purpose, and any other relevant (i.e., GSA or Commerce) directive. Such disclosure shall not be used to make determinations about individuals.

8. A record from this system of records may be disclosed, as a routine use, to the public after either publication of the application pursuant to 35 U.S.C. 122(b) or issuance of a patent pursuant to 35 U.S.C. 151. Further, a record may be disclosed, subject to the limitations of 37 CFR 1.14, as a routine use, to the public if the record was filed in an application which became abandoned or in which the proceedings were terminated and which application is referenced by either a published application, an application open to public inspections or an issued patent.

9. A record from this system of records may be disclosed, as a routine use, to a Federal, State, or local law enforcement agency, if the USPTO becomes aware of a violation or potential violation of law or regulation.

UNITED STATES PATENT AND TRADEMARK OFFICE

Commissioner for Patents
United States Patent and Trademark Office
P.O. Box 1450
Alexandria, VA 22313-1450
www.uspto.gov

ASPEN ENGINEERING SERVICES, LLC
8425 DOUBLEHEADER RANCH ROAD
MORRISON CO 80465

MAILED
JAN 10 2012
OFFICE OF PETITIONS

In re Patent No. 6,868,830 :
Issue Date: March 22, 2005 :
Application No. 10/709,571 :
Filed: May 14, 2004 :
Attorney Docket No. :

DECISION ON PETITION
UNDER 37 CFR 1.378(b)

This is a decision on the petition under 37 CFR 1.378(b), filed December 15, 2011, to accept an unavoidably delayed payment of a maintenance fee for the above-identified patent.

The petition is **DISMISSED**.

If reconsideration of this decision is desired, a petition for reconsideration under 37 CFR 1.378(e) must be filed within TWO (2) MONTHS from the mail date of this decision. No extension of this 2-month time limit can be granted under 37 CFR 1.136(a) or (b). **Any such petition for reconsideration must be accompanied by the petition fee of $400 (Fee Code 1462) as set forth in 37 CFR 1.17(f).** The petition for reconsideration should include an exhaustive attempt to provide the lacking item(s) noted below, since, after a decision on the petition for reconsideration, no further reconsideration or review of the matter will be undertaken by the Director.

The above-identified patent issued on March 22, 2005. The three and one-half year maintenance fee could have been paid from (1) March 22, 2008, through September 22, 2008, or (2) with a surcharge during the period from September 23, 2008 through March 22, 2009. Nonetheless, the patent term expired at the expiration of March 22, 2009, for failure to timely submit the three and one-half year maintenance fee.

A petition to accept the delayed payment of a maintenance fee under 35 U.S.C. § 41(c) and 37 CFR 1.378(b) must be accompanied by (1) an adequate showing that the delay was unavoidable, since reasonable care was taken to ensure that the maintenance fee would be paid timely and that the petition was filed promptly after the patentee was notified of, or otherwise became aware of, the expiration of the patent, (2) payment of the appropriate maintenance fee, unless previously submitted, and (3) payment of the surcharge set forth in 37 CFR 1.20(i)(1).

This petition lacks Item (1) above. However, payment of the $565.00 (Fee Code 2551) three and one-half year maintenance fee and the $700.00 (Fee Code 1557) surcharge therefor were submitted with the present petition.

The Director may accept late payment of the maintenance fee if the delay is shown to the satisfaction of the Director to have been "unavoidable". 35 U.S.C. § 41(c)(1).

Petitioner, co-patentee James M. Meyer, whom appears to be acting on behalf of the Assignee, Aspen Engineering Services, LLC, states that the delay in payment of the three and one-half year maintenance fee was unavoidable due to "financial hardship preventing me from paying the required 3 ½ year maintenance fees [sic] within the grace period allowed." Copies of the following documents were submitted as evidence: a two page employment termination letter dated February 24, 2009 (Appendix 1); an itemized listing of monthly expenses dated November 8, 2009 (Appendix 2); a checking account check register dated December 11, 2011 with an itemized listing for the period of January 12, 2009 through January 31, 2009 (Appendix 3); a Net Worth statement "As of" and dated February 11, 2009 (Appendix 4); an Unemployment Insurance Benefits statement dated February 17, 2009 (Appendix 5), an undated calendar print out for March 22, 2009 that identifies the task of "End of grace period for 3 ½ year maintenance fee" (Appendix 6); and an Offer of Employment letter dated March 1, 2011 (Appendix 7). With the exception of the Appendix 4 document that does not appear to identify the entity to which it is directed, the remaining documents of Appendices 1-3 and 5-7 identify James Meyer.

The showing of record is inadequate to establish unavoidable delay within the meaning of 37 CFR 1.378(b)(3).

Acceptance of late payment of a maintenance fee is considered under the same standard as that for reviving an abandoned application under 35 U.S.C. § 133 because 35 U.S.C. § 41(c)(1) uses the identical language, i.e. "unavoidable delay". Ray v. Lehman, 55 F.3d 606, 608-09, 34 USPQ2d 1786, 1787 (Fed. Cir. 1995)(quoting In re Patent No. 4,409,763, 7 USPQ2d 1798, 1800 (Comm'r Pat. 1988)). Decisions on reviving abandoned applications have adopted the "reasonably prudent person" standard in determining if the delay in responding to an Office action was unavoidable. Ex parte Pratt, 1887 Dec. Comm'r Pat. 31, 32-33 (Comm'r Pat. 1887)(the term "unavoidable" "is applicable to ordinary human affairs, and requires no more or greater care or diligence than is generally used and observed by prudent and careful men in relation to their most important business"); In re Mattullath, 38 App. D.C. 497, 514-515 (D.C. Cir. 1912); and Ex parte Henrich, 1913 Dec. Comm'r Pat. 139, 141. In addition, decisions on revival are made on a "case-by-case basis, taking all the facts and circumstances into account." Smith v. Mossinghoff, 671 F.2d 533, 538, 213 USPQ 977, 982 (D.C. Cir. 1982). Finally, a petition to revive an application as unavoidably abandoned cannot be granted where a petitioner has failed to meet his or her burden of establishing the cause of the unavoidable delay. Haines v. Quigg, 673 F. Supp. 314, 316-17, 5 USPQ2d 1130, 1131-32 (N.D. Ind. 1987).

In essence, petitioner must show that petitioner was aware of the need to pay the maintenance fee, and to that end was tracking it, or had engaged someone to track it before the expiration, but

when the fee came due, was "unavoidably" prevented from making the maintenance fee payment due to petitioner's financial condition until the petition was filed.

In determining whether a delay in paying a maintenance fee was unavoidable, one looks to whether the party responsible for payment of the maintenance fee exercised the due care of a reasonably prudent person. Ray, 55 F3d at 608-609, 34 USPQ2D at 1787. It is incumbent upon the patent owner to implement steps to schedule and pay the fee, or obligate another to do so. See California Medical Products v. Technol. Med. Prod., 921 F.Supp 1219, 1259 (D. Del. 1995). That is, 37 CFR 1.378(b)(3) requires a showing of the steps in place to pay the maintenance fee, and the record currently lacks an adequate showing of the steps that were emplaced by petitioner or anyone else. In the absence of an adequate showing that petitioner or anyone else was engaged in tracking the maintenance fee due dates, and that party had in fact been tracking the due dates with a reliable tracking system, such as would be used by prudent and careful men in relation to their most important business, petitioner cannot reasonably show that the delay was unavoidable delay. In re Katrapat, 6 USPQ2d 1863, 1867-1868 (Comm'r Pat. 1988); California, supra. Put otherwise, the issues of petitioner's financial problems are immaterial in the absence of a showing that these, and not the lack of any steps in place to pay the fee, caused or contributed to the delay.

A showing of unavoidable delay based upon financial condition must establish that the financial condition of the petitioner, and any other responsible party, such as, for example, other co-patentees or the Assignee, during the entire period of the delay was such as to excuse the delay. See Ex parte Murray, 1891 Dec. Comm'r Pat. 130, 131 (1891). The showing of record does not adequately establish that petitioner's entire delay in paying the three and one-half year maintenance fee from March 22, 2008 until the petition was filed on or about December 15, 2011 was unavoidable within the meaning of 35 U.S.C. § 41(c) and 37 CFR 1.378(b).

In the cover letter that accompanied the petition that is referred to in the Statement section on Page 4 of the petition, petitioner states, in part, that:

> "Specifically, the financial downturn in the 3rd quarter of 2008 resulting in warnings from my employer (URS) that layoffs were eminent. The warnings coincided with the September 22, 2008 due date for maintenance fee. Consequently, I made the decision to wait until the end of the grace period to pay the fee in case I needed the money for living expenses."

First and foremost, in order to establish that the delay was, in fact, unavoidable with the meaning of 35 U.S.C. § 41(c) and 37 CFR 1.378(b), the record must adequately establish that petitioner's entire delay in paying the three and one-half year maintenance fee from March 22, 2008 until the petition was filed on or about December 15, 2011 was, in fact, unavoidable.

Petitioner has provided no discussion of the facts surrounding any of the circumstances and/or events that occurred between March 22, 2008, the date the maintenance fee originally became due, and the September 2008 date petitioner urges that he received the layoff warnings from his

employer (URS), which, per petitioner, "coincided with September 22, 2008 due date for the maintenance fee." In regard to payment of the subject maintenance fee, September 22, 2008 was the last day the maintenance fee could have been paid without the additional payment of a surcharge that became due on or after September 23, 2008 until the expiration of September 22, 2009. However, petitioner is completely silent as to how and why the delay in payment of the maintenance fee between the dates of March 22, 2008 and September 22, 2008 was unavoidable within the meaning of 35 U.S.C. § 41(c) and 37 CFR 1.378(b). Petitioner has also provided no discussion of the facts surrounding any circumstances and/or events explaining what actions, if any, were taken by each of the other joint patentees and/or the Assignee, Aspen Engineering Services, LLC. The actions and/or inactions of each of the joint patentees and/or the Assignee must be considered in determining whether or not the delay in payment of the maintenance fee is, in fact, unavoidable within the meaning of 35 U.S.C. § 41(c) and 37 CFR 1.378(b).

Petitioner also states that, as a consequence of the eminent layoff warnings from his employer, he "made the decision to wait until the end of the grace period to pay the fee...." This "decision to wait", in and of itself, constitutes an intentional delay in the payment of the maintenance for at least the time period from September 22, 2008 until the December 15, 2011 date the present petition was filed. As such, the entire delay in payment of the subject maintenance fee was not unavoidable within the meaning of 35 U.S.C. § 41(c) and 37 CFR 1.378(b). On this basis alone, acceptance of the subject three and ½ year maintenance fee on the basis of unavoidable delay under 37 CFR 1.378(b) cannot be granted.

In the last paragraph of the Cover Letter of the present petition, petitioner states that "I have moved since I originally filed the patent. My current address is listed below." As set forth under Section 2542 of the Manual of Patent Examining Procedure (MPEP) states, in part, that

> "[r]equests for a change of the correspondence address may be sent to the Office of Patent Application Processing during the enforceable life of the patent. To ensure accuracy and to expedite requests for change to the correspondence address, it is suggested that the request include both the patent number and the application number...The Office form Change of Correspondence Address, Patent (PTO/SB/123) may be used to request a change of correspondence address for an issued patent."

As set forth under MPEP section 711.03(c), "[t]he mere inclusion, in a paper filed for another purpose, of an address differing from the previously provided correspondence address, without mention of the fact that an address change was being made" does not constitute proper notification of a change in correspondence address. A Change of Correspondence Address *Patent* form (Form PTO/SB/123) is attached to this decision for petitioner's convenience. While a courtesy copy of this decision is being mailed to petitioner at the address provided in the petition, all future correspondence will continue to be directed to the above correspondence address currently of record until appropriate instructions are received.

Further correspondence with respect to this matter should be addressed as follows:

By mail: Mail Stop PETITIONS
Commissioner for Patents
Post Office Box 1450
Alexandria, VA 22313-1450

By hand: Customer Service Window
Mail Stop Petitions
Randolph Building
401 Dulany Street
Alexandria, VA 22314

By fax: (571) 273-8300
ATTN: Office of Petitions

Any questions concerning this matter may be directed to Brian W. Brown at (571) 272-5338.

Brian W. Brown
Petitions Examiner
Office of Petitions

Cc: James M. Meyer
18990 W 54th Place
Golden, CO 80403

ATTN: Change of Correspondence Address *Patent* (Form PTO/SB/123), 2 Pages.

UNITED STATES PATENT AND TRADEMARK OFFICE

Commissioner for Patents
United States Patent and Trademark Office
P.O. Box 1450
Alexandria, VA 22313-1450
www.uspto.gov

NOVAK DRUCE + QUIGG LLP
300 NEW JERSEY AVENUE, NW
FIFTH FLOOR
WASHINGTON DC 20001

MAILED

AUG 16 2010

OFFICE OF PETITIONS

In re Patent No. 7,150,473	:	
Issue Date: December 19, 2006	:	
Application No. 10/709,586	:	DECISION ON PETITION
Filed: May 15, 2004	:	
Attorney Docket No. 00173.0055.PCUS00	:	

This is a decision on the petition under 37 CFR 1.182, filed May 12, 2010, requesting issuance of duplicate Letters Patent for the above-identified patent.

The petition is **GRANTED**.

The Office of Data Management is directed to issue duplicate Letters Patent.

As authorized, the $400 fee for the petition under 37 CFR 1.182 has been assessed to petitioner's credit card.

The file does not indicate a change of address has been submitted, although the address given on the petition differs from the address of record. If appropriate, a change of address should be filed. A courtesy copy of this decision is being mailed to the address given on the petition; however, the Office will mail all future correspondence solely to the address of record.

Telephone inquiries concerning this decision may be directed to the undersigned at (571) 272-3230. Inquiries regarding the issuance of duplicate Letters Patent may be directed to Niomi Farmer in the Office of Data Management at (703) 756-1556.

A copy of this decision is being sent to Office of Data Management for issuance of duplicate Letters Patent.

Shirene Willis Brantley

Shirene Willis Brantley
Senior Petitions Attorney
Office of Petitions

cc: Niomi Farmer, Randolph Square, 9th Floor, Room D30-B (Fax No. (571) 270-9753)

cc: ANDREW Z. WEAVER
NOVAK DRUCE + QUIGG LLP
1000 LOUISIANA, FIFTY-THIRD FLOOR
HOUSTON, TX 77002

UNITED STATES PATENT AND TRADEMARK OFFICE

Commissioner for Patents
United States Patent and Trademark Office
P.O. Box 1450
Alexandria, VA 22313-1450
www.uspto.gov

NOVAK DRUCE + QUIGG LLP
300 NEW JERSEY AVENUE, NW
FIFTH FLOOR
WASHINGTON DC 20001

MAILED

AUG 16 2010

OFFICE OF PETITIONS

In re Patent No. 7,150,473
Issue Date: December 19, 2006
Application No. 10/709,586
Filed: May 15, 2004
Attorney Docket No. 00173.0055.PCUS00

DECISION ON PETITION

This is a decision on the petition under 37 CFR 1.182, filed May 12, 2010, requesting issuance of duplicate Letters Patent for the above-identified patent.

The petition is **GRANTED**.

The Office of Data Management is directed to issue duplicate Letters Patent.

As authorized, the $400 fee for the petition under 37 CFR 1.182 has been assessed to petitioner's credit card.

The file does not indicate a change of address has been submitted, although the address given on the petition differs from the address of record. If appropriate, a change of address should be filed. A courtesy copy of this decision is being mailed to the address given on the petition; however, the Office will mail all future correspondence solely to the address of record.

Telephone inquiries concerning this decision may be directed to the undersigned at (571) 272-3230. Inquiries regarding the issuance of duplicate Letters Patent may be directed to Niomi Farmer in the Office of Data Management at (703) 756-1556.

A copy of this decision is being sent to Office of Data Management for issuance of duplicate Letters Patent.

Shirene Willis Brantley

Shirene Willis Brantley
Senior Petitions Attorney
Office of Petitions

cc: Niomi Farmer, Randolph Square, 9th Floor, Room D30-B (Fax No. (571) 270-9753)

cc: ANDREW Z. WEAVER
NOVAK DRUCE + QUIGG LLP
1000 LOUISIANA, FIFTY-THIRD FLOOR
HOUSTON, TX 77002

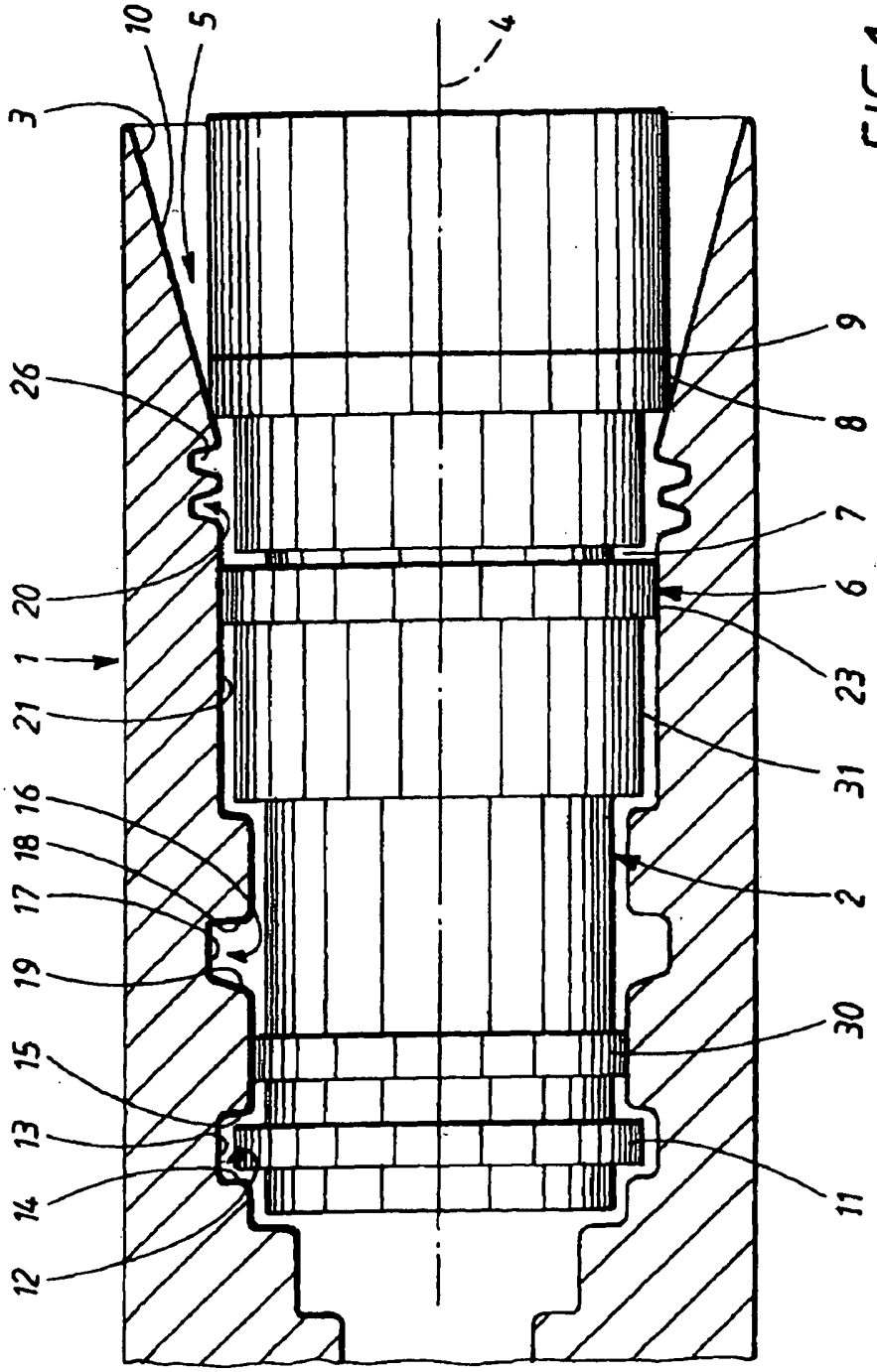

FIG.1

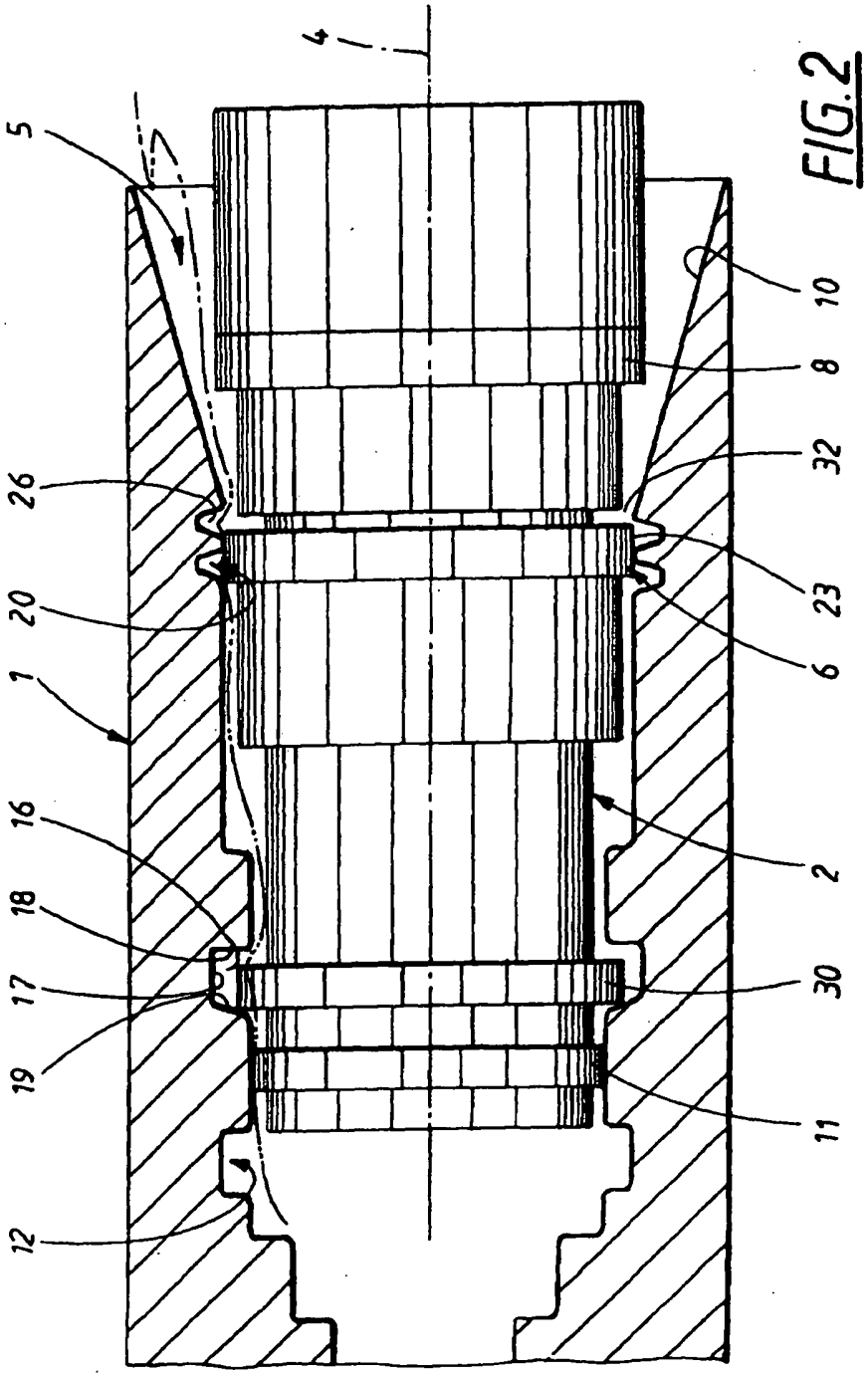

FIG. 2

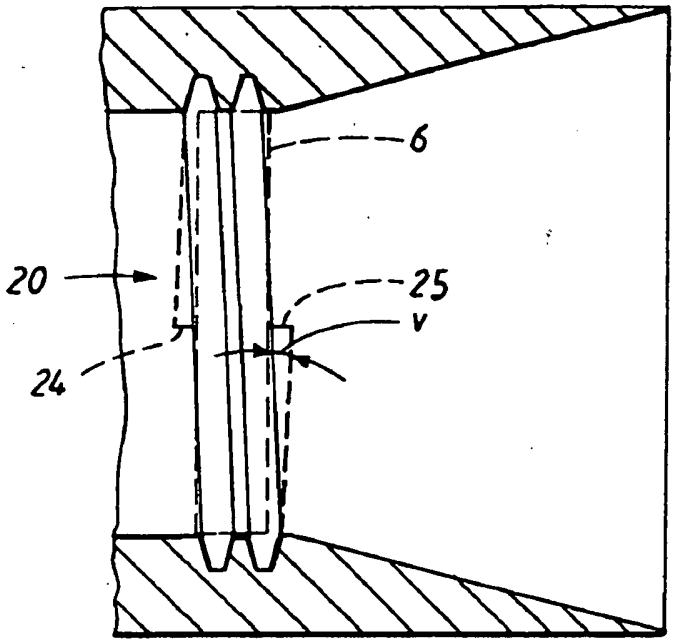

FIG.3

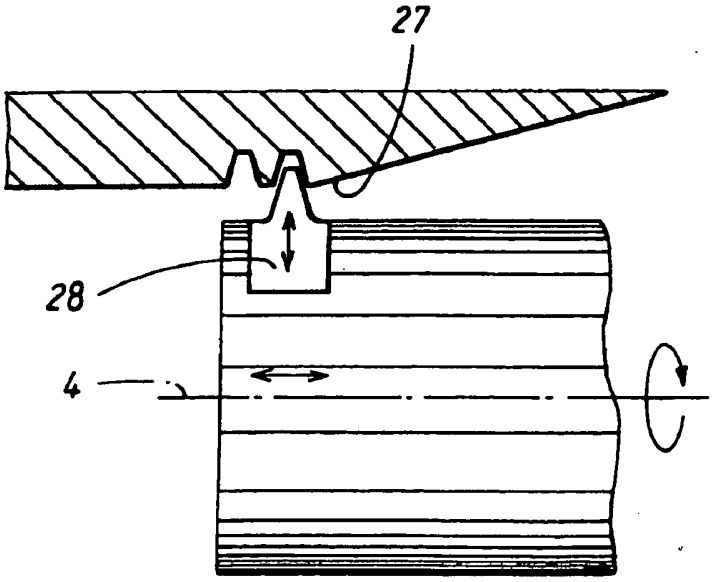

FIG.4

US007150473B2

(12) **United States Patent**
Sandborn et al.

(10) **Patent No.: US 7,150,473 B2**
(45) **Date of Patent: Dec. 19, 2006**

(54) **COUPLING DEVICE COMPRISING A LEAKAGE GROOVE**

(75) Inventors: **Mats Sandborn**, Partille (SE); **Stefan Eriksson**, Göteborg (SE)

(73) Assignee: **Volvo Lastvagnar AB**, Göteborg (SE)

(*) Notice: Subject to any disclaimer, the term of this patent is extended or adjusted under 35 U.S.C. 154(b) by 0 days.

(21) Appl. No.: **10/709,586**

(22) Filed: **May 15, 2004**

(65) **Prior Publication Data**

US 2005/0017504 A1 Jan. 27, 2005

Related U.S. Application Data

(63) Continuation of application No. PCT/SE02/02046, filed on Nov. 11, 2002, now abandoned.

(30) **Foreign Application Priority Data**

Nov. 15, 2001 (SE) 0103798

(51) **Int. Cl.**
F16L 55/00 (2006.01)

(52) **U.S. Cl.** **285/14**; 285/93; 285/924

(58) **Field of Classification Search** 285/13, 285/14, 345, 346, 924, 93; 277/608, 613
See application file for complete search history.

(56) **References Cited**

U.S. PATENT DOCUMENTS

4,361,380	A *	11/1982	Marazzi	285/924
6,027,143	A *	2/2000	Berg et al.	285/93
6,027,144	A *	2/2000	Hagen et al.	285/93
6,095,570	A *	8/2000	Hagen et al.	285/93
6,286,877	B1 *	9/2001	Mendoza et al.	285/924

FOREIGN PATENT DOCUMENTS

EP	0766033	A1	4/1997
EP	0795102	B1	8/2000
SE	459279	B	6/1989
WO	WO 9713094	A1	4/1997

* cited by examiner

Primary Examiner—Aaron Dunwoody
(74) *Attorney, Agent, or Firm*—Novak Druce & Quigg, LLP

(57) **ABSTRACT**

Method and arrangement for providing a coupling device for conduits of pressurized media which consists of (includes) at least two coupling parts (**1**, **2**) that are possible to couple to each other in the shape of a female part and a male part which is insertable into the female part. A locking device is arranged to hold the coupling parts completely coupled in a locking position. The locking device comprises a locking member (**11**) positioned at one of the coupling parts (**2**) which in a locking position attaches into a recess (**12**) in the other coupling part. A sealing member (**6**) in the locking position achieves sealing between the coupling parts. The other coupling part (**1**) exhibits a further recess (**16**) in which the locking member can be brought to locking of the coupling parts (**1**, **2**) in an outer locking position when the two coupling parts are coupled to each other. In the outer locking position there is incomplete sealing with the two coupling parts being locked so that they are prevented from coming apart but are incompletely coupled together and allowed to be brought together to said locking position for the complete coupling of the coupling parts. In the presence of pressurized media, this enables an indication that the outer locking position has been assumed due to the presence of leakage of pressurized media. The leakage is obtained via a leakage groove (**20**) which is angled towards the radial plane of the coupling parts. The leakage groove can thus be made by means of rotating machining.

8 Claims, 3 Drawing Sheets

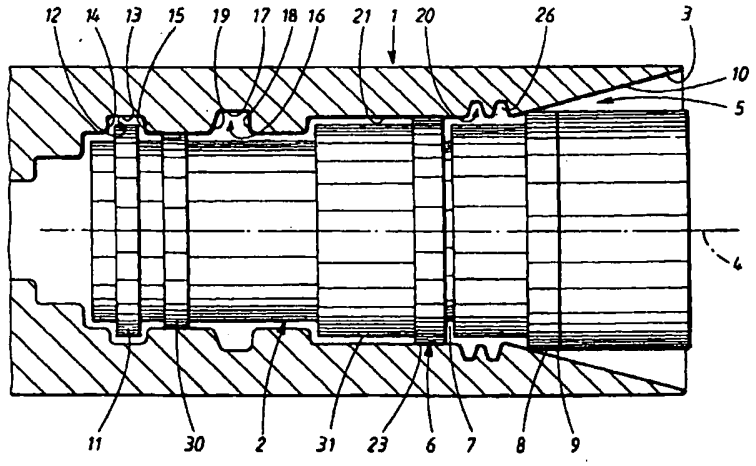

COUPLING DEVICE COMPRISING A LEAKAGE GROOVE

CROSS-REFERENCE TO RELATED APPLICATION:

The present application is a continuation patent application of International Application No. PCT/SE02/02046 filed 11 Nov. 2002 now abandoned which was published in English pursuant to Article 21 (2) of the Patent Cooperation Treaty, and which claims priority to Swedish Application No. 0103798-5 filed 15 Nov. 2001. Both applications are expressly incorporated herein by reference in their entireties.

TECHNICAL FIELD

The present invention relates to methods and arrangements for providing coupling device in conduits utilized for conveying pressurized media.

BACKGROUND ART

Simpler coupling devices for pressurized media conduits exhibit a disadvantage in that an incomplete coupling of the comprised coupling parts can lead to a fall in pressure during operation due to the coupling parts coming apart.

In such couplings, it has proven to be difficult to find such coupling errors during controls, which can cause a large risk of accidents due to, for example, loss of breaking function in braking systems which are actuated by pressurized air.

For systems with pressurized media with special safety demands, there are known coupling devices which are arranged to leak pressurized media in an incomplete locking position. In so doing, an acoustic indicating signal is generated at the same time as the coupling is stopped from separating entirely, due to which a loss of pressure is delayed (See EP 0795 102 B1 and SE 459 279 B as examples thereof). In these known couplings, the leakage point forms a beveling in the end of one of the coupling parts which effects the placement of an interacting sealing ring.

DISCLOSURE OF INVENTION

An object of the present invention is to achieve a coupling device in which the leakage point is created using simple means. This objective is obtained by means of utilization of the present invention.

The invention can take the form of a method or an arrangement for providing a coupling device in a conduit utilized for conveying pressurized media, and which includes two coupling parts which can be coupled to each other in the form of (1) a female part and (2) a male part which is insertable into the female part. A locking device is arranged to allow coupling of the male part with the female part and to, in an inner locking position, hold the coupling parts completely coupled together. The locking device comprises (includes, but is not limited to) at least one locking member at one of the coupling parts that is arranged to, in the locking position, attach into a recess in the other coupling part with one or several sealing members that are arranged to, in the locking position, achieve sealing between the coupling parts. The second coupling part exhibits a further recess in which the locking member is brought to locking of the coupling parts in an outer locking position at the coupling of the two coupling parts with each other. In the outer locking position, an incomplete sealing is present and the two coupling parts are locked and incompletely coupled together so that they are prevented from coming apart, but are allowed to be further brought together to the inner locking position for a complete coupling of the coupling parts. In this manner, in the presence of a pressurized media, an indication can be obtained that the outer locking position has been assumed due to the presence of leakage of pressurized media.

BRIEF DESCRIPTION OF THE DRAWINGS

FIG. **1** is a partially cutaway side-view of the coupling device configured according to the teachings of the present invention in a completely coupled state.

FIG. **2** shows a partially cutaway view corresponding to the view of FIG. **1**, but the coupling device is in an incompletely coupled state.

FIG. **3** shows a detailed schematic view of a coupling device showing a leakage groove of the invention as a spiral groove.

FIG. **4** is a schematic view illustrating a method for milling a leakage groove in a portion of a coupling device of the present invention.

MODE FOR THE INVENTION

In the following, the invention will be described utilizing an exemplary embodiment in which like reference numerals are employed to indicate corresponding parts.

As may best be appreciated in FIG. **1**, the coupling device includes two coupling parts, for example for coupling one part (for example a pipe for a pressurized media, pressurized air or the like) to a fixed part of a pressurized media system (for example, a not shown pressurized container. The two main parts of the coupling device in the example shown consist of a first coupling part **1**, which includes a coupling end (though not shown) for attachment to, for example, the wall of the container or another fixed part of the pressurized system and a second coupling part for example for the attachment of a pressurized media pipe. The coupling device, with its two coupling parts **1**, **2**, achieves a coupling between two parts of a pressurized system. The first coupling part **1** is shaped as a female part or a casing part with a circular opening **3**, which axially inwards becomes an essentially cylindrical passage **5** being rotationally symmetrical about the longitudinal axis **4** of the coupling device. The second coupling part **2** is designed as a male or an insertion part dimensioned to be inserted into the open end **3** of the female part. The coupling device is provided with sealing elements in order to achieve a coupling between coupling parts which is protected from dirt and sealed against pressure. The coupling parts mainly consist of an inner sealing ring **6** which is placed in a ring-shaped groove **7** in the male part **2**. The sealing ring **6** consists of an elastic O-ring sealing made in an elastic material such as rubber or plastic. In the example shown, an additional sealing element **8** is fitted on to the male part **2** and is in contact with a stopping abutment **9** on the male part. This sealing primarily forms a protection against dirt and dust and is intended to be in sealing contact with a conical wall **10** at the open end **3** of the female part. This sealing element **8** is also thus ring-shaped, and preferably made of an elastic material such as rubber or plastic.

The sealing elements **6**, **8** can, for example, have an essentially rectangular cross-section, or alternatively exhibit circular or oval cross-section shapes and extend around the outwards facing casing surface **31** of the male part **2**.

The coupling device, according to the invention, exhibits a locking device which is intended to lockingly hold two coupling parts to each other in a coupled state. The locking device exhibits at least one locking member **11** which is elastic in order to constantly attempt to assume the locking position. In the example shown, the locking member consists of a radially outwards elastic locking ring. The locking ring **11** is to be positioned in a recess in the male part so that it is essentially axially locked to the male part **2** or at least has a severely limited axial mobility towards the male part. In the locking device, a first ring-shaped locking groove **12** is included in the female part and in which the locking ring is arranged to flex inwards into a first inner locking position. The locking groove **12** has a ring-shaped bottom surface **13** which, for example, has a cylinder shaped surface and two contact surfaces **14, 15** which extend in parallel to each other and extend in one radial plane each relative to the longitudinal axis **4** of the female part. In the locking device, there is also comprised a second outer locking groove **16** in the female part **1**. This locking groove also has a ring-shaped bottom surface **17** which, for example, has a cylindrically shaped casing and a contact surface **18** axially turned inwards in the female part which extends in a radial plane. The opposite surface **19** of the track **16** is however oblique relative to a radial plane; that is to say, forms a conical surface so that the locking ring **11**, when the male part **2** is inserted into the female part, is pressed radially inwards towards its elastic action in order to enable the male part to be pressed further inwards to its full locking position.

In principle, the locking device can function with one single locking ring **11** which in the inner position interacts with the inner locking groove **12**, and in the outer locking position interacts with the outer locking groove **16**. In order to further raise the safety, the locking device in the example shown is provided with a second, or outer locking ring **30** that is arranged on the male part **2** axially outside of the first locking ring **11** at a distance from it which is smaller than the axial distance between the locking grooves **12, 16**; that is, it is in a completely coupled state positioned axially between the looking grooves **12, 16**. In an incompletely locked position, for example when the male part **2** has not been inserted so that the locking ring **11** grips into the locking groove **12**, the outer locking groove **16** will catch the outer locking ring **30** so that it is in locking contact with the outer locking groove **16**. Additional safety is also obtained if one of the locking rings **11, 30** should malfunction.

The coupling device, in a known manner, is arranged to leak pressurized media in the outer coupling position, and thereby indicate that there is an incomplete coupling. In the case of pressurized air, the indication is in the form of an acoustic signal, usually a hissing sound.

The indication is obtained, according to the invention, by means of a leakage groove **20** in that coupling part which does not support the sealing member **6**; in the example shown, the female part **1**. The leakage groove **20** in the illustrated example is arranged in a sealing portion **21** of the female part **1**; i.e., a portion which seals, pressure-proof, due to interaction with the sealing ring **6**. This portion **21** is in similarity to the sealing ring **6** rotationally symmetrical about the longitudinal axis **4**, and extends axially mainly inside of the leakage groove **20** and with a diameter which corresponds to the outer diameter of the sealing ring **16** in the sealing position. That is, in the total locking position according to FIG. **1** with the elastic sealing ring slightly compressed. The elasticity is, however, designed to withstand the pressure from the pressure media and such that a rolling and undesired deformation does not arise during axial coupling movements. In the example shown, the sealing portion **21** of the female part **1** has a cylindrically shaped casing surface, and terminates at the axially outer end at the leakage groove.

The leakage groove **20**, hereafter referred to as the leak groove, exemplarily includes an axial extension that exceeds the axial extension of the active sealing surface **23** of the inner sealing ring **6**, which in the illustrated example is essentially cylindrically shaped. In addition, the extension of the leak groove has an acute angle (labeled "v") towards the radial plane of the female part **1**, and extends in a screw or spiral shape along the sealing surface **21** of the female part as depicted in FIG. **3**.

In the example shown, the leak groove extends at least two circles (revolutions) and begins with an inner groove end **24** and terminates in an outer groove end **25**. As can be appreciated in FIGS. **2** and **3**, the positioning of the leak groove **20** is located relative to the position of the sealing ring **6** in the incompletely locked or incompletely coupled position that the inner groove end **24** extends axially inside of the active sealing surface **23** of the sealing ring **6**, while the outer groove end **25** extends axially outside of this surface. Furthermore, the width of a single groove portion **26** is suitably smaller than the width of the surface **23** of the sealing ring **6** and the elasticity is so chosen that the sealing ring does not completely fill the leak groove in any portion. Under these circumstances, the leak groove **20** forms a free passage for leakage of pressure media in the incompletely coupled or locked position according to FIGS. **2** and **3**, by means of which an indication is obtained in the case of air or other gas in the shape of an acoustic signal such as a hissing or "squeaking" sound. The outer sealing ring **8** in this case also provides free passage via a ring shaped gap **32** which is formed between the ring and the conical wall **10** of the female part **1** in the outer locked position.

In the completely coupled or locked position according to FIG. **1**, the sealing ring **6** is positioned axially inside the leak groove **20** and is in sealing contact with the sealing surface **21** of the male part **2**. The outer sealing ring **8** is positioned axially outside of the leak groove **20**, and is in the inner locking position in sealing contact, thus constituting a barrier against dirt against the conical wall **10** of the male part.

By means of the acute angle (v) of the leak groove **20** and its screw spiral shape, it is made possible for the groove to be rationally manufactured by means of rotating machining, together with manufacture of at least some surfaces of the coupling part which is to be provided with the leak groove, for example the conical wall **10** of the female part **1** or its entire inner cavity surface. In FIG. **4**, it is schematically shown how the form of the inner surface **27** is made by, for example, rotation of the male part **2** about its longitudinal axis **4** with a milling tool **28** working on the inner surface during a combined movement axially and radially in order to remove material in the surface and thus mill the leak groove from its one end to its other end. The relative rotational speed and the axial speed of movement and the radial movement of the tool and the material; i.e., the male part are hereby synchronized during the milling of the leak groove **20** so that the desired extension is obtained, for example, the slope with the angle (v). The groove can have a depth which successively becomes smaller towards the ends or terminates relatively abruptly whichever is suitable from a production point of view. By means of a pre-programmed machine, the groove can be made in one and the same manufacturing moment as the conical wall or the rest of the cavity.

The invention is not limited to the above-described examples and the exemplary embodiments shown in the drawings, but can be varied and still remain within the scope of the patented claims. It is, for example, possible to use only a single locking ring or a single sealing ring. In the example shown, the pressurized media is exemplified as air, but the use of other pressurable media is also contemplated, such as other gases or pressurized fluids like hydraulic oil. This makes the indication of leakage ocularly observable unless the leakage of fluid can give an acoustic indication.

In addition, it is possible to replace the locking rings with other locking elements which in a corresponding manner can be switched between a locking position and a releasing position. In addition, the locking rings, locking grooves, sealing rings and also the leak grooves can change places so that they are positioned in the male part instead of in the female part, and vice versa.

The invention claimed is:

1. A coupling device for conduits of pressurized media, said coupling device comprising: two coupling parts, each having a casing surface, couplable together as a female part (1) and a male part (2) which is insertable into the female part; a locking device arranged to allow coupling of the male part with the female part and to, in an inner locking position, hold the coupling parts coupled together, the locking device comprises at least one locking member at one of the coupling parts that is arranged to, in said locking position, attach into a recess in the other coupling part with one or several sealing members being arranged to, in said locking position, achieve sealing engagement between the coupling parts, with the second coupling part having a further recess in which said locking member is brought into locking engagement of the coupling parts in an outer locking position at the coupling of the two coupling parts with each other, and in which outer locking position an incomplete sealing is achieved and in which the two coupling parts are locked and incompletely coupled together and thereby being prevented from coming apart and being allowed to be brought together to said inner locking position for a complete coupling of the coupling parts by means of which, in the presence of a pressurized media, an indication can be obtained that the outer locking position has been assumed due to the presence of leakage of pressurized media, and wherein the casing surface of one of the coupling parts exhibits a leakage groove which runs at an acute angle (v) towards a radial plane of the coupling part the leakage groove having an axial inner end and an axial outer end, and is so positioned that in the inner locking position the leakage groove is positioned axially outside of the sealing member and in the outer locking position the axial inner end of the leakage groove is positioned axially inside of the sealing member and the axial outer end of the leakage groove is positioned axially outside of the sealing member by means of which pressurized media can pass by the sealing member wherein the leakage groove consists of a spiral-shaped groove.

2. The coupling device as recited claim **1**, wherein the leakage indication consists of an audible leakage sound.

3. The coupling device as recited in claim **1**, wherein the leakage groove is arranged in a radially inward facing casing surface of the female part and the sealing member consists of a sealing ring arranged in a radially outward facing casing surface of the male part.

4. The coupling device as recited in claim **3**, wherein the female part, in the casing surface axially outside of the leakage groove, exhibits a conical wall and the male part exhibits, axially outside of said sealing ring, a second sealing ring that in the inner locking position is in sealing contact with the conical wall, and in the outer locking position leaves free passage for pressurized media via a ring shaped gap between the sealing ring and the conical wall.

5. A coupling device for conduits of pressurized media, said coupling device comprising: two coupling parts, each having a casing surface, couplable together as a female part (1) and a male part (2) which is insertable into the female part; a locking device arranged to allow coupling of the male part with the female part and to, in an inner locking position, hold the coupling parts coupled together, the locking device comprises at least one locking member at one of the coupling parts that is arranged to, in said locking position, attach into a recess in the other coupling part with one or several sealing members being arranged to, in said locking position, achieve sealing engagement between the coupling parts, with the second coupling part having a further recess in which said locking member is brought into locking engagement of the coupling parts in an outer locking position at the coupling of the two coupling parts with each other, and in which outer locking position an incomplete sealing is achieved and in which the two coupling parts are locked and incompletely coupled together and thereby being prevented from coming apart and being allowed to be brought together to said inner locking position for a complete coupling of the coupling parts by means of which, in the presence of a pressurized media, an indication can be obtained that the outer locking position has been assumed due to the presence of leakage of pressurized media, and wherein the casing surface of one of the coupling parts exhibits a spiral-shaped leakage groove which runs at an acute angle (v) towards a radial plane of the coupling part the leakage groove having an axial inner end and an axial outer end, and is so positioned that in the inner locking position the leakage groove is positioned axially outside of the sealing member and in the outer locking position the axial inner end of the leakage groove is positioned axially inside of the sealing member and the axial outer end of the leakage groove is positioned axially outside of the sealing member by means of which pressurized media can pass by the sealing member.

6. The coupling device as recited in claim **5**, wherein a leakage indication consists of an audible leakage sound.

7. The coupling device as recited in claim **5**, wherein the leakage groove is arranged in a radially inward facing casing surface of the female part and the sealing member consists of a sealing ring arranged in a radially outward facing casing surface of the male part.

8. The coupling device as recited in claim **7**, wherein the female part, in the casing surface axially outside of the leakage groove, exhibits a conical wall and the male part exhibits, axially outside of said sealing ring, a second sealing ring that in the inner locking position is in sealing contact with the conical wall, and in the outer locking position leaves free passage for pressurized media via a ring shaped gap between the sealing ring and the conical wall.

* * * * *

UNITED STATES PATENT AND TRADEMARK OFFICE

Commissioner for Patents
United States Patent and Trademark Office
P.O. Box 1450
Alexandria, VA 22313-1450
www.uspto.gov

NOVAK DRUCE + QUIGG LLP
300 NEW JERSEY AVENUE, NW
FIFTH FLOOR
WASHINGTON DC 20001

MAILED
NOV 22 2010
OFFICE OF PETITIONS

In re Patent No. 7,127,333
Application No. 10/709,587
Filing Date: May 15, 2004
Issue Date: October 24, 2006
Attorney Docket No. **07589.166.PCUS00**

DECISION GRANTING PETITION

This is a decision on the petition under 37 CFR 1.182, filed September 14, 2010, requesting issuance of duplicate Letters of Patent for the above-identified patent.

The petition is **granted**.

The file record discloses that the instant application matured into U.S. Patent No. 7,127,333 on October 24, 2006. Petitioner contends, however, that the patent was lost .

In view of the facts set forth in the petition, it is concluded that the original Letters of Patent was lost. The Office of Data Management is directed to issue duplicate Letters of Patent.

The petition fee of $400.00 was recived.

Any questions concerning this decision may be directed to the undersigned at (571)272-3222. Any questions concerning issuance of the duplicate Letter of Patent should be directed to Niomi Farmer, Office of Data Management at (703) 308-9250 extension 129.

A copy of this decision is being forwarded to the Office of Data Management for issuance of a duplicate Letter of Patent.

/Kenya A. McLaughlin/

Kenya A. McLaughlin
Petitions Attorney
Office of Petitions

cc: Niomi Farmer—Office of Data Management FAX: 571-270-9753

UNITED STATES PATENT AND TRADEMARK OFFICE

Commissioner for Patents
United States Patent and Trademark Office
P.O. Box 1450
Alexandria, VA 22313-1450
www.uspto.gov

In re Patent No. 6984559
Issue Date: January 10,2006
Application No. 10709640
Filed: May 19,2004
Attorney Docket No. 12812-US-PA

:
:DECISION GRANTING PETITION
:UNDER 37 CFR 1.378(c)
:

This is a decision on the electronic petition, filed December 2,2011 ,under 37 CFR 1.378(c) to accept the unintentionally delayed payment of the 3.5 year maintenance fee for the above-identified patent.

The petition is **GRANTED**.

The maintenance fee is accepted, and the above-identified patent reinstated as of December 2,2011 . This decision also constitutes notice that the fee has been accepted. An electronic copy of the petition and this decision has been created as an entry in the Image File Wrapper. Nevertheless, petitioner should print and retain an independent copy.

Telephone inquiries related to this electronic decision should be directed to the Electronic Business Center at 1-866-217-9197.

PTO/SB/66 (03-09)
Approved for use through 03/31/2012. OMB 0651-0016
U.S. Patent and Trademark Office: U.S. DEPARTMENT OF COMMERCE
Under the Paperwork Reduction Act of 1995, no persons are required to respond to a collection of information unless it displays valid OMB control number.

PETITION TO ACCEPT UNINTENTIONALLY DELAYED PAYMENT OF MAINTENANCE FEE IN AN EXPIRED PATENT (37 CFR 1.378(c))

Patent Number	Issue Date (YYYY-MM-DD)	Application Number	Filing Date (YYYY-MM-DD)	Docket Number (if applicable)
6,984,559	2006-01-10	10/709,640	2004-05-19	LKSP0110USA

CAUTION: Maintenance fee (and surcharge, if any) payment must correctly identify: (1) the patent number and (2) the application number of the actual U.S. application leading to issuance of that patent to ensure the fee(s) is/are associated with the correct patent. 37 CFR 1.366(c) and (d).

SMALL ENTITY
☐ Patentee claims, or has previously claimed, small entity status. See 37 CFR 1.27.

LOSS OF ENTITLEMENT TO SMALL ENTITY STATUS
☐ Patentee is no longer entitled to small entity status. See 37 CFR 1.27(g)

NOT Small Entity			Small Entity		
	Fee	Code		Fee	Code
◉	3 ½ year	(1551)	○	3 ½ year	(2551)
○	7 ½ year	(1552)	○	7 ½ year	(2552)
○	11 ½ year	(1553)	○	11 ½ year	(2553)

SURCHARGE
The surcharge required by 37 CFR 1.20(i)(2) (Fee Code 1558) must be paid as a condition of accepting unintentionally delayed payment of the maintenance fee.

MAINTENANCE FEE (37 CFR 1.20(e)-(g))
The appropriate maintenance fee must be submitted with this petition.

STATEMENT
THE UNDERSIGNED CERTIFIES THAT THE DELAY IN PAYMENT OF THE MAINTENANCE FEE TO THIS PATENT WAS UNINTENTIONAL

PETITIONER(S) REQUEST THAT THE DELAYED PAYMENT OF THE MAINTENANCE FEE BE ACCEPTED AND THE PATENT REINSTATED

THIS PORTION MUST BE COMPLETED BY THE SIGNATORY OR SIGNATORIES

37 CFR 1.378(d) states: "Any petition under this section must be signed by an attorney or agent registered to practice before the Patent and Trademark Office, or by the patentee, the assignee, or other party in interest."

I certify, in accordance with 37 CFR 1.4(d)(4) that I am

◉ An attorney or agent registered to practice before the Patent and Trademark Office

○ A sole patentee

○ A joint patentee; I certify that I am authorized to sign this submission on behalf of all the other patentees.

○ A joint patentee; all of whom are signing this e-petition

○ The assignee of record of the entire interest

Under the Paperwork Reduction Act of 1995, no persons are required to respond to a collection of information unless it displays valid OMB control number.

Patent Practitioner			
A signature of the applicant or representative is required in accordance with 37 CFR 1.33 and 10.18. Please see 37 CFR 1.4(d) for the form of the signature			
Signature	/Winston Hsu/	Date (YYYY-MM-DD)	2011-12-02
Name	Winston Hsu	Registration Number	41526

This collection of information is required by 37 CFR 1.378(c). The information is required to obtain or retain a benefit by the public which is to file (and by the USPTO to process) an application. Confidentiality is governed by 35 U.S.C. 122 and 37 CFR 1.11 and 1.14. This collection is estimated to take 1 hour to complete, including gathering, preparing, and submitting the completed application form to the USPTO. Time will vary depending upon the individual case. Any comments on the amount of time you require to complete this form and/ or suggestions for reducing this burden, should be sent to the Chief Information Officer, U.S. Patent and Trademark Office, U.S. Department of Commerce, P.O. Box 1450, Alexandria, VA 22313-1450. DO NOT SEND FEES OR COMPLETED FORMS TO THIS ADDRESS. **This form can only be used when in conjunction with EFS-Web. If this form is mailed to the USPTO, it may cause delays in reinstating the patent.**

Privacy Act Statement

The Privacy Act of 1974 (P.L. 93-579) requires that you be given certain information in connection with your submission of the attached form related to a patent application or patent. Accordingly, pursuant to the requirements of the Act, please be advised that: (1) the general authority for the collection of this information is 35 U.S.C. 2(b)(2); (2) furnishing of the information solicited is voluntary; and (3) the principal purpose for which the information is used by the U.S. Patent and Trademark Office is to process and/or examine your submission related to a patent application or patent. If you do not furnish the requested information, the U.S. Patent and Trademark Office may not be able to process and/or examine your submission, which may result in termination of proceedings or abandonment of the application or expiration of the patent.

The information provided by you in this form will be subject to the following routine uses:

1. The information on this form will be treated confidentially to the extent allowed under the Freedom of Information Act (5 U.S.C. 552) and the Privacy Act (5 U.S.C. 552a). Records from this system of records may be disclosed to the Department of Justice to determine whether the Freedom of Information Act requires disclosure of these records.

2. A record from this system of records may be disclosed, as a routine use, in the course of presenting evidence to a court, magistrate, or administrative tribunal, including disclosures to opposing counsel in the course of settlement negotiations.

3. A record in this system of records may be disclosed, as a routine use, to a Member of Congress submitting a request involving an individual, to whom the record pertains, when the individual has requested assistance from the Member with respect to the subject matter of the record.

4. A record in this system of records may be disclosed, as a routine use, to a contractor of the Agency having need for the information in order to perform a contract. Recipients of information shall be required to comply with the requirements of the Privacy Act of 1974, as amended, pursuant to 5 U.S.C. 552a(m).

5. A record related to an International Application filed under the Patent Cooperation Treaty in this system of records may be disclosed, as a routine use, to the International Bureau of the World Intellectual Property Organization, pursuant to the Patent Cooperation Treaty.

6. A record in this system of records may be disclosed, as a routine use, to another federal agency for purposes of National Security review (35 U.S.C. 181) and for review pursuant to the Atomic Energy Act (42 U.S.C. 218(c)).

7. A record from this system of records may be disclosed, as a routine use, to the Administrator, General Services, or his/her designee, during an inspection of records conducted by GSA as part of that agency's responsibility to recommend improvements in records management practices and programs, under authority of 44 U.S.C. 2904 and 2906. Such disclosure shall be made in accordance with the GSA regulations governing inspection of records for this purpose, and any other relevant (i.e., GSA or Commerce) directive. Such disclosure shall not be used to make determinations about individuals.

8. A record from this system of records may be disclosed, as a routine use, to the public after either publication of the application pursuant to 35 U.S.C. 122(b) or issuance of a patent pursuant to 35 U.S.C. 151. Further, a record may be disclosed, subject to the limitations of 37 CFR 1.14, as a routine use, to the public if the record was filed in an application which became abandoned or in which the proceedings were terminated and which application is referenced by either a published application, an application open to public inspections or an issued patent.

9. A record from this system of records may be disclosed, as a routine use, to a Federal, State, or local law enforcement agency, if the USPTO becomes aware of a violation or potential violation of law or regulation.

UNITED STATES PATENT AND TRADEMARK OFFICE

Commissioner for Patents
United States Patent and Trademark Office
P.O. Box 1450
Alexandria, VA 22313-1450
www.uspto.gov

Paper No.

PHILIP S. JOHNSON
JOHNSON & JOHNSON
ONE JOHNSON & JOHNSON PLAZA
NEW BRUNSWICK NJ 08933-7003

MAILED
MAY 24 2011
OFFICE OF PETITIONS

In re Patent No. 7,901,435	:	DECISION ON
Slivka et al.	:	REQUEST FOR RECONSIDERATION
Application No. 10/709,795	:	OF
Filed: May 28, 2004	:	PATENT TERM ADJUSTMENT
Atty Docket No. 101896-252	:	and
(DEP5319)	:	NOTICE OF INTENT TO ISSUE
	:	CERTIFICATE OF CORRECTION

This is in response to the "REQUEST FOR RECONSIDERATION OF PATENT TERM ADJUSTMENT UNDER 37 C.F.R. §1.705(d) AFTER PATENT ISSUANCE," filed May 6, 2011. Patentees request that the patent term adjustment indicated on the patent be corrected from four (4) days to eighty (80) days.

The request for reconsideration of patent term adjustment is **GRANTED**.

The patent term adjustment indicated in the patent is to be corrected by issuance of a certificate of correction showing a revised Patent Term Adjustment of eighty (80) days.

Patentees dispute the period of reduction of 96 days entered for the December 3, 2010 filing of a letter that Patentees submitted pursuant to their duty of good faith and candor regarding an error in patent term adjustment.

Patentees are correct. A review of the record confirms that a period of reduction of 96 days was entered for the filing of a candor letter on December 3, 2010. The only other paper filed

on December 3, 2010 was the issue fee transmittal, for which a period of reduction was not warranted.

§ 1.704(e) provides that:

> Submission of an application for patent term adjustment under § 1.705(b) (with or without request under §1.705(c) for reinstatement of reduced patent term adjustment) will not be considered a failure to engage in reasonable efforts to conclude prosecution (processing or examination) of the application under paragraph (c)(10) of this section.

Likewise, filing of a letter pursuant to comment 43 is covered by 37 CFR 1.704(e). Therefore, the Patent Term Adjustment was incorrectly reduced. Consequently 96 days will be properly restored to patentees patent term adjustment.

However, a review of the record reveals that an information disclosure statement (IDS) was filed on March 20, 2006. The IDS did not include a 1.704(d) statement. The filing of the IDS occurred 20 days after the filing of their response to an Office action on February 28, 2006, and as acknowledged by patentee was not expressly requested by the examiner. Accordingly, pursuant to 37 CFR 1.704(c)(8), a period of reduction of 20 days is being entered for this delay.

In view thereof, the patent should have issued with a revised patent term adjustment of eighty (80) days.

As the December 3 letter was submitted as an advisement to the Office of an error in Patentee's favor, the Office did not assess the $200.00 fee under 37 CFR 1.18(e). Likewise, no fee is required filed solely to remove the period of reduction entered due to the filing of the candor letter.

The Certificate of Correction Branch has been advised of this decision. The application is, thereby, forwarded to the Certificates of Correction Branch for issuance of a certificate of correction in order to rectify this error. The Office will issue a certificate of correction indicating that the term of the above-identified patent is extended or adjusted by EIGHTY (80) days.

Telephone inquiries specific to this matter should be directed to the undersigned at (571) 272-3219.

Nancy Johnson
Senior Petitions Attorney
Office of Petitions

Enclosure: Copy of DRAFT Certificate of Correction

UNITED STATES PATENT AND TRADEMARK OFFICE

CERTIFICATE OF CORRECTION

PATENT : 7,901,435 B2

DATED : **March 8, 2011** **DRAFT**

INVENTOR(S) : Slivka et al.

It is certified that error appears in the above-identified patent and that said Letters Patent is hereby corrected as shown below:

On the cover page,

[*] Notice: Subject to any disclaimer, the term of this patent is extended or adjusted under 35 USC 154(b) by 4 days

Delete the phrase "by 4 days" and insert – by 80 days--

UNITED STATES PATENT AND TRADEMARK OFFICE

UNITED STATES DEPARTMENT OF COMMERCE
United States Patent and Trademark Office
Address: COMMISSIONER FOR PATENTS
P.O. Box 1450
Alexandria, Virginia 22313-1450
www.uspto.gov

CALFEE HALTER & GRISWOLD, LLP
800 SUPERIOR AVENUE
SUITE 1400
CLEVELAND, OH 44114

Mail Date: 08/03/2010

Applicant	: Alan Bauer	: DECISION ON REQUEST FOR
Patent Number	: 7641161	: RECALCULATION of PATENT
Issue Date	: 01/05/2010	: TERM ADJUSTMENT IN VIEW
Application No	: 10/709,814	: OF WYETH AND NOTICE OF INTENT TO
Filed	: 05/28/2004	: ISSUE CERTIFICATE OF CORRECTION
		:

The Request for Recalculation is **GRANTED** to the extent indicated.

The patent term adjustment has been determined to be **993** days. The USPTO will *sua sponte* issue a certificate of correction reflecting the amount of PTA days determined by the recalculation.

Prior to the issuance of the certificate of correction, the USPTO will afford patentee an opportunity to be heard and request reconsideration. Accordingly, patentee has **one month or thirty (30) days**, whichever is longer, to file a request for reconsideration of this patent term adjustment calculation. See 35 U.S.C. 154(b)(3)(B)(ii) and 37 CFR 1.322(a)(4). No extensions of time will be granted under 37 CFR 1.136.

Patentee should use document code PET.OP if electronically filing a request for reconsideration of this patent term adjustment calculation. The patentee must also include the information required by 37 CFR 1.705(b)(2) and the fee required by 37 CFR 1.18(e). If patentee does not file a timely request for reconsideration of this patent term adjustment calculation including the information required by 37 CFR 1.705(b)(2) and the fee required by 37 CFR 1.18(e), the USPTO will issue a certificate of correction reflecting the PTA determination noted above.

Patentee should be aware that in order to preserve the right to review in the United States District Court for the District of Columbia of the USPTO patent term adjustment determination, patentee must ensure that he or she also take the steps required under 35 U.S.C. 154(b)(4)(A) in a timely manner. Nothing in the request for recalculation should be construed as providing an alternative time frame for commencing a civil action under 35 U.S.C. 154(b)(4)(A).

Any questions concerning this decision should be directed to the Office of Patent Legal Administration at 571-272-7702.

PTO/SB/66 (03-09)
Approved for use through 03/31/2012. OMB 0651-0016
U.S. Patent and Trademark Office: U.S. DEPARTMENT OF COMMERCE
Under the Paperwork Reduction Act of 1995, no persons are required to respond to a collection of information unless it displays valid OMB control number.

PETITION TO ACCEPT UNINTENTIONALLY DELAYED PAYMENT OF MAINTENANCE FEE IN AN EXPIRED PATENT (37 CFR 1.378(c))

Patent Number	Issue Date (YYYY-MM-DD)	Application Number	Filing Date (YYYY-MM-DD)	Docket Number (if applicable)
6,995,086	2006-02-07	10/710,237	2004-06-28	LKSP0036USA

CAUTION: Maintenance fee (and surcharge, if any) payment must correctly identify: (1) the patent number and (2) the application number of the actual U.S. application leading to issuance of that patent to ensure the fee(s) is/are associated with the correct patent. 37 CFR 1.366(c) and (d).

SMALL ENTITY
☐ Patentee claims, or has previously claimed, small entity status. See 37 CFR 1.27.

LOSS OF ENTITLEMENT TO SMALL ENTITY STATUS
☐ Patentee is no longer entitled to small entity status. See 37 CFR 1.27(g)

NOT Small Entity			Small Entity		
	Fee	Code		Fee	Code
◉	3 ½ year	(1551)	○	3 ½ year	(2551)
○	7 ½ year	(1552)	○	7 ½ year	(2552)
○	11 ½ year	(1553)	○	11 ½ year	(2553)

SURCHARGE
The surcharge required by 37 CFR 1.20(i)(2) (Fee Code 1558) must be paid as a condition of accepting unintentionally delayed payment of the maintenance fee.

MAINTENANCE FEE (37 CFR 1.20(e)-(g))
The appropriate maintenance fee must be submitted with this petition.

STATEMENT
THE UNDERSIGNED CERTIFIES THAT THE DELAY IN PAYMENT OF THE MAINTENANCE FEE TO THIS PATENT WAS UNINTENTIONAL

PETITIONER(S) REQUEST THAT THE DELAYED PAYMENT OF THE MAINTENANCE FEE BE ACCEPTED AND THE PATENT REINSTATED

THIS PORTION MUST BE COMPLETED BY THE SIGNATORY OR SIGNATORIES

37 CFR 1.378(d) states: "Any petition under this section must be signed by an attorney or agent registered to practice before the Patent and Trademark Office, or by the patentee, the assignee, or other party in interest."

I certify, in accordance with 37 CFR 1.4(d)(4) that I am

◉ An attorney or agent registered to practice before the Patent and Trademark Office

○ A sole patentee

○ A joint patentee; I certify that I am authorized to sign this submission on behalf of all the other patentees.

○ A joint patentee; all of whom are signing this e-petition

○ The assignee of record of the entire interest

Under the Paperwork Reduction Act of 1995, no persons are required to respond to a collection of information unless it displays valid OMB control number.

Patent Practitioner			
A signature of the applicant or representative is required in accordance with 37 CFR 1.33 and 10.18. Please see 37 CFR 1.4(d) for the form of the signature			
Signature	/Winston Hsu/	Date (YYYY-MM-DD)	2012-02-04
Name	Winston Hsu	Registration Number	41526

This collection of information is required by 37 CFR 1.378(c). The information is required to obtain or retain a benefit by the public which is to file (and by the USPTO to process) an application. Confidentiality is governed by 35 U.S.C. 122 and 37 CFR 1.11 and 1.14. This collection is estimated to take 1 hour to complete, including gathering, preparing, and submitting the completed application form to the USPTO. Time will vary depending upon the individual case. Any comments on the amount of time you require to complete this form and/ or suggestions for reducing this burden, should be sent to the Chief Information Officer, U.S. Patent and Trademark Office, U.S. Department of Commerce, P.O. Box 1450, Alexandria, VA 22313-1450. DO NOT SEND FEES OR COMPLETED FORMS TO THIS ADDRESS. **This form can only be used when in conjunction with EFS-Web. If this form is mailed to the USPTO, it may cause delays in reinstating the patent.**

Privacy Act Statement

The Privacy Act of 1974 (P.L. 93-579) requires that you be given certain information in connection with your submission of the attached form related to a patent application or patent. Accordingly, pursuant to the requirements of the Act, please be advised that: (1) the general authority for the collection of this information is 35 U.S.C. 2(b)(2); (2) furnishing of the information solicited is voluntary; and (3) the principal purpose for which the information is used by the U.S. Patent and Trademark Office is to process and/or examine your submission related to a patent application or patent. If you do not furnish the requested information, the U.S. Patent and Trademark Office may not be able to process and/or examine your submission, which may result in termination of proceedings or abandonment of the application or expiration of the patent.

The information provided by you in this form will be subject to the following routine uses:

1. The information on this form will be treated confidentially to the extent allowed under the Freedom of Information Act (5 U.S.C. 552) and the Privacy Act (5 U.S.C. 552a). Records from this system of records may be disclosed to the Department of Justice to determine whether the Freedom of Information Act requires disclosure of these records.

2. A record from this system of records may be disclosed, as a routine use, in the course of presenting evidence to a court, magistrate, or administrative tribunal, including disclosures to opposing counsel in the course of settlement negotiations.

3. A record in this system of records may be disclosed, as a routine use, to a Member of Congress submitting a request involving an individual, to whom the record pertains, when the individual has requested assistance from the Member with respect to the subject matter of the record.

4. A record in this system of records may be disclosed, as a routine use, to a contractor of the Agency having need for the information in order to perform a contract. Recipients of information shall be required to comply with the requirements of the Privacy Act of 1974, as amended, pursuant to 5 U.S.C. 552a(m).

5. A record related to an International Application filed under the Patent Cooperation Treaty in this system of records may be disclosed, as a routine use, to the International Bureau of the World Intellectual Property Organization, pursuant to the Patent Cooperation Treaty.

6. A record in this system of records may be disclosed, as a routine use, to another federal agency for purposes of National Security review (35 U.S.C. 181) and for review pursuant to the Atomic Energy Act (42 U.S.C. 218(c)).

7. A record from this system of records may be disclosed, as a routine use, to the Administrator, General Services, or his/her designee, during an inspection of records conducted by GSA as part of that agency's responsibility to recommend improvements in records management practices and programs, under authority of 44 U.S.C. 2904 and 2906. Such disclosure shall be made in accordance with the GSA regulations governing inspection of records for this purpose, and any other relevant (i.e., GSA or Commerce) directive. Such disclosure shall not be used to make determinations about individuals.

8. A record from this system of records may be disclosed, as a routine use, to the public after either publication of the application pursuant to 35 U.S.C. 122(b) or issuance of a patent pursuant to 35 U.S.C. 151. Further, a record may be disclosed, subject to the limitations of 37 CFR 1.14, as a routine use, to the public if the record was filed in an application which became abandoned or in which the proceedings were terminated and which application is referenced by either a published application, an application open to public inspections or an issued patent.

9. A record from this system of records may be disclosed, as a routine use, to a Federal, State, or local law enforcement agency, if the USPTO becomes aware of a violation or potential violation of law or regulation.

UNITED STATES PATENT AND TRADEMARK OFFICE

Commissioner for Patents
United States Patent and Trademark Office
P.O. Box 1450
Alexandria, VA 22313-1450
www.uspto.gov

In re Patent No. 6995086
Issue Date: February 7,2006
Application No. 10710237
Filed: June 28,2004
Attorney Docket No. LKSP0036USA

:
:DECISION GRANTING PETITION
:UNDER 37 CFR 1.378(c)
:

This is a decision on the electronic petition, filed February 4,2012 ,under 37 CFR 1.378(c) to accept the unintentionally delayed payment of the 3.5 year maintenance fee for the above-identified patent.

The petition is **GRANTED**.

The maintenance fee is accepted, and the above-identified patent reinstated as of February 4,2012 . This decision also constitutes notice that the fee has been accepted. An electronic copy of the petition and this decision has been created as an entry in the Image File Wrapper. Nevertheless, petitioner should print and retain an independent copy.

Telephone inquiries related to this electronic decision should be directed to the Electronic Business Center at 1-866-217-9197.

PTO/SB/66 (03-09)
Approved for use through 03/31/2012. OMB 0651-0016
U.S. Patent and Trademark Office: U.S. DEPARTMENT OF COMMERCE
Under the Paperwork Reduction Act of 1995, no persons are required to respond to a collection of information unless it displays valid OMB control number.

PETITION TO ACCEPT UNINTENTIONALLY DELAYED PAYMENT OF MAINTENANCE FEE IN AN EXPIRED PATENT (37 CFR 1.378(c))

Patent Number	Issue Date (YYYY-MM-DD)	Application Number	Filing Date (YYYY-MM-DD)	Docket Number (if applicable)
7,145,644	2006-12-05	10/710,243	2004-06-29	LKSP0040USA

CAUTION: Maintenance fee (and surcharge, if any) payment must correctly identify: (1) the patent number and (2) the application number of the actual U.S. application leading to issuance of that patent to ensure the fee(s) is/are associated with the correct patent. 37 CFR 1.366(c) and (d).

SMALL ENTITY
☐ Patentee claims, or has previously claimed, small entity status. See 37 CFR 1.27.

LOSS OF ENTITLEMENT TO SMALL ENTITY STATUS
☐ Patentee is no longer entitled to small entity status. See 37 CFR 1.27(g)

NOT Small Entity			Small Entity		
	Fee	Code		Fee	Code
◉	3 ½ year	(1551)	○	3 ½ year	(2551)
○	7 ½ year	(1552)	○	7 ½ year	(2552)
○	11 ½ year	(1553)	○	11 ½ year	(2553)

SURCHARGE
The surcharge required by 37 CFR 1.20(i)(2) (Fee Code 1558) must be paid as a condition of accepting unintentionally delayed payment of the maintenance fee.

MAINTENANCE FEE (37 CFR 1.20(e)-(g))
The appropriate maintenance fee must be submitted with this petition.

STATEMENT
THE UNDERSIGNED CERTIFIES THAT THE DELAY IN PAYMENT OF THE MAINTENANCE FEE TO THIS PATENT WAS UNINTENTIONAL

PETITIONER(S) REQUEST THAT THE DELAYED PAYMENT OF THE MAINTENANCE FEE BE ACCEPTED AND THE PATENT REINSTATED

THIS PORTION MUST BE COMPLETED BY THE SIGNATORY OR SIGNATORIES

37 CFR 1.378(d) states: "Any petition under this section must be signed by an attorney or agent registered to practice before the Patent and Trademark Office, or by the patentee, the assignee, or other party in interest."

I certify, in accordance with 37 CFR 1.4(d)(4) that I am

◉ An attorney or agent registered to practice before the Patent and Trademark Office

○ A sole patentee

○ A joint patentee; I certify that I am authorized to sign this submission on behalf of all the other patentees.

○ A joint patentee; all of whom are signing this e-petition

○ The assignee of record of the entire interest

Under the Paperwork Reduction Act of 1995, no persons are required to respond to a collection of information unless it displays valid OMB control number.

Patent Practitioner			
A signature of the applicant or representative is required in accordance with 37 CFR 1.33 and 10.18. Please see 37 CFR 1.4(d) for the form of the signature			
Signature	/Winston Hsu/	Date (YYYY-MM-DD)	2012-04-03
Name	Winston Hsu	Registration Number	41526

This collection of information is required by 37 CFR 1.378(c). The information is required to obtain or retain a benefit by the public which is to file (and by the USPTO to process) an application. Confidentiality is governed by 35 U.S.C. 122 and 37 CFR 1.11 and 1.14. This collection is estimated to take 1 hour to complete, including gathering, preparing, and submitting the completed application form to the USPTO. Time will vary depending upon the individual case. Any comments on the amount of time you require to complete this form and/ or suggestions for reducing this burden, should be sent to the Chief Information Officer, U.S. Patent and Trademark Office, U.S. Department of Commerce, P.O. Box 1450, Alexandria, VA 22313-1450. DO NOT SEND FEES OR COMPLETED FORMS TO THIS ADDRESS. **This form can only be used when in conjunction with EFS-Web. If this form is mailed to the USPTO, it may cause delays in reinstating the patent.**

Privacy Act Statement

The Privacy Act of 1974 (P.L. 93-579) requires that you be given certain information in connection with your submission of the attached form related to a patent application or patent. Accordingly, pursuant to the requirements of the Act, please be advised that: (1) the general authority for the collection of this information is 35 U.S.C. 2(b)(2); (2) furnishing of the information solicited is voluntary; and (3) the principal purpose for which the information is used by the U.S. Patent and Trademark Office is to process and/or examine your submission related to a patent application or patent. If you do not furnish the requested information, the U.S. Patent and Trademark Office may not be able to process and/or examine your submission, which may result in termination of proceedings or abandonment of the application or expiration of the patent.

The information provided by you in this form will be subject to the following routine uses:

1. The information on this form will be treated confidentially to the extent allowed under the Freedom of Information Act (5 U.S.C. 552) and the Privacy Act (5 U.S.C. 552a). Records from this system of records may be disclosed to the Department of Justice to determine whether the Freedom of Information Act requires disclosure of these records.

2. A record from this system of records may be disclosed, as a routine use, in the course of presenting evidence to a court, magistrate, or administrative tribunal, including disclosures to opposing counsel in the course of settlement negotiations.

3. A record in this system of records may be disclosed, as a routine use, to a Member of Congress submitting a request involving an individual, to whom the record pertains, when the individual has requested assistance from the Member with respect to the subject matter of the record.

4. A record in this system of records may be disclosed, as a routine use, to a contractor of the Agency having need for the information in order to perform a contract. Recipients of information shall be required to comply with the requirements of the Privacy Act of 1974, as amended, pursuant to 5 U.S.C. 552a(m).

5. A record related to an International Application filed under the Patent Cooperation Treaty in this system of records may be disclosed, as a routine use, to the International Bureau of the World Intellectual Property Organization, pursuant to the Patent Cooperation Treaty.

6. A record in this system of records may be disclosed, as a routine use, to another federal agency for purposes of National Security review (35 U.S.C. 181) and for review pursuant to the Atomic Energy Act (42 U.S.C. 218(c)).

7. A record from this system of records may be disclosed, as a routine use, to the Administrator, General Services, or his/her designee, during an inspection of records conducted by GSA as part of that agency's responsibility to recommend improvements in records management practices and programs, under authority of 44 U.S.C. 2904 and 2906. Such disclosure shall be made in accordance with the GSA regulations governing inspection of records for this purpose, and any other relevant (i.e., GSA or Commerce) directive. Such disclosure shall not be used to make determinations about individuals.

8. A record from this system of records may be disclosed, as a routine use, to the public after either publication of the application pursuant to 35 U.S.C. 122(b) or issuance of a patent pursuant to 35 U.S.C. 151. Further, a record may be disclosed, subject to the limitations of 37 CFR 1.14, as a routine use, to the public if the record was filed in an application which became abandoned or in which the proceedings were terminated and which application is referenced by either a published application, an application open to public inspections or an issued patent.

9. A record from this system of records may be disclosed, as a routine use, to a Federal, State, or local law enforcement agency, if the USPTO becomes aware of a violation or potential violation of law or regulation.

UNITED STATES PATENT AND TRADEMARK OFFICE

Commissioner for Patents
United States Patent and Trademark Office
P.O. Box 1450
Alexandria, VA 22313-1450
www.uspto.gov

In re Patent No. 7145644
Issue Date: December 5,2006
Application No. 10710243
Filed: June 29,2004
Attorney Docket No. LKSP0040USA

:
:DECISION GRANTING PETITION
:UNDER 37 CFR 1.378(c)
:

This is a decision on the electronic petition, filed April 3,2012 ,under 37 CFR 1.378(c) to accept the unintentionally delayed payment of the 3.5 year maintenance fee for the above-identified patent.

The petition is **GRANTED**.

The maintenance fee is accepted, and the above-identified patent reinstated as of April 3,2012 .
This decision also constitutes notice that the fee has been accepted. An electronic copy of the petition and this decision has been created as an entry in the Image File Wrapper. Nevertheless, petitioner should print and retain an independent copy.

Telephone inquiries related to this electronic decision should be directed to the Electronic Business Center at 1-866-217-9197.

UNITED STATES PATENT AND TRADEMARK OFFICE

Commissioner for Patents
United States Patent and Trademark Office
P.O. Box 1450
Alexandria, VA 22313-1450
www.uspto.gov

KOKKA & BACKUS, PC
703 HIGH STREET
PALO ALTO CA 94301

MAILED

DEC 30 2010

OFFICE OF PETITIONS

In re Patent No. 7,822,727
Issued: October 26, 2010
Application No. 10/710,356
Filed: July 2, 2004
Attorney Docket No. BOR-012

: LETTER REGARDING
: PATENT TERM ADJUSTMENT

This is a decision on the "Request for Reconsideration of Patent Term Adjustment Determination Under 37 CFR § 1.705(d)" filed on December 13, 2010, requesting that the patent term adjustment indicated on the above-identified patent be corrected from 540 days to 723 days.

The request for review of the patent term adjustment is **DISMISSED.**

Patentee is given **THIRTY (30) DAYS or ONE (1) MONTH, whichever is longer,** from the mail date of this decision to respond. No extensions of time will be granted under § 1.136.

The patent term adjustment indicated in the patent is properly reflected.

Patentee fails to account for the filing of a Notice of Appeal on June 11, 2007. The 183 days of the over three year period consumed by appellate review, beginning on June 11, 2007 and ending on December 11, 2007 are not included in the B delay. *See* 35 U.S.C. § 154(b)(1)(B)(ii). As such, the patent term adjustment is 540 (422 + 580 - 183 - 26 - 253) days, not 723 days.

The Office acknowledges submission of the $200.00 fee set forth in 37 CFR 1.18(e). No additional fees are required.

Telephone inquiries specific to this decision should be directed to the undersigned at (571) 272-3212.

Patricia Faison-Ball

Patricia Faison-Ball
Senior Petitions Attorney
Office of Petitions

UNITED STATES PATENT AND TRADEMARK OFFICE

Commissioner for Patents
United States Patent and Trademark Office
P.O. Box 1450
Alexandria, VA 22313-1450
www.uspto.gov

In re Patent No. 7182873
Issue Date: February 27,2007
Application No. 10710402
Filed: July 8,2004
Attorney Docket No. LKSP0049USA

:
:DECISION GRANTING PETITION
:UNDER 37 CFR 1.378(c)
:

This is a decision on the electronic petition, filed April 5,2012 ,under 37 CFR 1.378(c) to accept the unintentionally delayed payment of the 3.5 year maintenance fee for the above-identified patent.

The petition is **GRANTED**.

The maintenance fee is accepted, and the above-identified patent reinstated as of April 5,2012 . This decision also constitutes notice that the fee has been accepted. An electronic copy of the petition and this decision has been created as an entry in the Image File Wrapper. Nevertheless, petitioner should print and retain an independent copy.

Telephone inquiries related to this electronic decision should be directed to the Electronic Business Center at 1-866-217-9197.

PTO/SB/66 (03-09)
Approved for use through 03/31/2012. OMB 0651-0016
U.S. Patent and Trademark Office: U.S. DEPARTMENT OF COMMERCE
Under the Paperwork Reduction Act of 1995, no persons are required to respond to a collection of information unless it displays valid OMB control number.

PETITION TO ACCEPT UNINTENTIONALLY DELAYED PAYMENT OF MAINTENANCE FEE IN AN EXPIRED PATENT (37 CFR 1.378(c))

Patent Number	Issue Date (YYYY-MM-DD)	Application Number	Filing Date (YYYY-MM-DD)	Docket Number (if applicable)
7,182,873	2007-02-27	10/710,402	2004-07-08	LKSP0049USA

CAUTION: Maintenance fee (and surcharge, if any) payment must correctly identify: (1) the patent number and (2) the application number of the actual U.S. application leading to issuance of that patent to ensure the fee(s) is/are associated with the correct patent. 37 CFR 1.366(c) and (d).

SMALL ENTITY
☐ Patentee claims, or has previously claimed, small entity status. See 37 CFR 1.27.

LOSS OF ENTITLEMENT TO SMALL ENTITY STATUS
☐ Patentee is no longer entitled to small entity status. See 37 CFR 1.27(g)

NOT Small Entity			Small Entity		
	Fee	Code		Fee	Code
◉	3 ½ year	(1551)	○	3 ½ year	(2551)
○	7 ½ year	(1552)	○	7 ½ year	(2552)
○	11 ½ year	(1553)	○	11 ½ year	(2553)

SURCHARGE
The surcharge required by 37 CFR 1.20(i)(2) (Fee Code 1558) must be paid as a condition of accepting unintentionally delayed payment of the maintenance fee.

MAINTENANCE FEE (37 CFR 1.20(e)-(g))
The appropriate maintenance fee must be submitted with this petition.

STATEMENT
THE UNDERSIGNED CERTIFIES THAT THE DELAY IN PAYMENT OF THE MAINTENANCE FEE TO THIS PATENT WAS UNINTENTIONAL

PETITIONER(S) REQUEST THAT THE DELAYED PAYMENT OF THE MAINTENANCE FEE BE ACCEPTED AND THE PATENT REINSTATED

THIS PORTION MUST BE COMPLETED BY THE SIGNATORY OR SIGNATORIES

37 CFR 1.378(d) states: "Any petition under this section must be signed by an attorney or agent registered to practice before the Patent and Trademark Office, or by the patentee, the assignee, or other party in interest."

I certify, in accordance with 37 CFR 1.4(d)(4) that I am

◉ An attorney or agent registered to practice before the Patent and Trademark Office

○ A sole patentee

○ A joint patentee; I certify that I am authorized to sign this submission on behalf of all the other patentees.

○ A joint patentee; all of whom are signing this e-petition

○ The assignee of record of the entire interest

Under the Paperwork Reduction Act of 1995, no persons are required to respond to a collection of information unless it displays valid OMB control number.

Patent Practitioner			
A signature of the applicant or representative is required in accordance with 37 CFR 1.33 and 10.18. Please see 37 CFR 1.4(d) for the form of the signature			
Signature	/Winston Hsu/	Date (YYYY-MM-DD)	2012-04-05
Name	Winston Hsu	Registration Number	41526

This collection of information is required by 37 CFR 1.378(c). The information is required to obtain or retain a benefit by the public which is to file (and by the USPTO to process) an application. Confidentiality is governed by 35 U.S.C. 122 and 37 CFR 1.11 and 1.14. This collection is estimated to take 1 hour to complete, including gathering, preparing, and submitting the completed application form to the USPTO. Time will vary depending upon the individual case. Any comments on the amount of time you require to complete this form and/ or suggestions for reducing this burden, should be sent to the Chief Information Officer, U.S. Patent and Trademark Office, U.S. Department of Commerce, P.O. Box 1450, Alexandria, VA 22313-1450. DO NOT SEND FEES OR COMPLETED FORMS TO THIS ADDRESS. **This form can only be used when in conjunction with EFS-Web. If this form is mailed to the USPTO, it may cause delays in reinstating the patent.**

Privacy Act Statement

The Privacy Act of 1974 (P.L. 93-579) requires that you be given certain information in connection with your submission of the attached form related to a patent application or patent. Accordingly, pursuant to the requirements of the Act, please be advised that: (1) the general authority for the collection of this information is 35 U.S.C. 2(b)(2); (2) furnishing of the information solicited is voluntary; and (3) the principal purpose for which the information is used by the U.S. Patent and Trademark Office is to process and/or examine your submission related to a patent application or patent. If you do not furnish the requested information, the U.S. Patent and Trademark Office may not be able to process and/or examine your submission, which may result in termination of proceedings or abandonment of the application or expiration of the patent.

The information provided by you in this form will be subject to the following routine uses:

1. The information on this form will be treated confidentially to the extent allowed under the Freedom of Information Act (5 U.S.C. 552) and the Privacy Act (5 U.S.C. 552a). Records from this system of records may be disclosed to the Department of Justice to determine whether the Freedom of Information Act requires disclosure of these records.

2. A record from this system of records may be disclosed, as a routine use, in the course of presenting evidence to a court, magistrate, or administrative tribunal, including disclosures to opposing counsel in the course of settlement negotiations.

3. A record in this system of records may be disclosed, as a routine use, to a Member of Congress submitting a request involving an individual, to whom the record pertains, when the individual has requested assistance from the Member with respect to the subject matter of the record.

4. A record in this system of records may be disclosed, as a routine use, to a contractor of the Agency having need for the information in order to perform a contract. Recipients of information shall be required to comply with the requirements of the Privacy Act of 1974, as amended, pursuant to 5 U.S.C. 552a(m).

5. A record related to an International Application filed under the Patent Cooperation Treaty in this system of records may be disclosed, as a routine use, to the International Bureau of the World Intellectual Property Organization, pursuant to the Patent Cooperation Treaty.

6. A record in this system of records may be disclosed, as a routine use, to another federal agency for purposes of National Security review (35 U.S.C. 181) and for review pursuant to the Atomic Energy Act (42 U.S.C. 218(c)).

7. A record from this system of records may be disclosed, as a routine use, to the Administrator, General Services, or his/her designee, during an inspection of records conducted by GSA as part of that agency's responsibility to recommend improvements in records management practices and programs, under authority of 44 U.S.C. 2904 and 2906. Such disclosure shall be made in accordance with the GSA regulations governing inspection of records for this purpose, and any other relevant (i.e., GSA or Commerce) directive. Such disclosure shall not be used to make determinations about individuals.

8. A record from this system of records may be disclosed, as a routine use, to the public after either publication of the application pursuant to 35 U.S.C. 122(b) or issuance of a patent pursuant to 35 U.S.C. 151. Further, a record may be disclosed, subject to the limitations of 37 CFR 1.14, as a routine use, to the public if the record was filed in an application which became abandoned or in which the proceedings were terminated and which application is referenced by either a published application, an application open to public inspections or an issued patent.

9. A record from this system of records may be disclosed, as a routine use, to a Federal, State, or local law enforcement agency, if the USPTO becomes aware of a violation or potential violation of law or regulation.

PTO/SB/66 (03-09)
Approved for use through 03/31/2012. OMB 0651-0016
U.S. Patent and Trademark Office: U.S. DEPARTMENT OF COMMERCE
Under the Paperwork Reduction Act of 1995, no persons are required to respond to a collection of information unless it displays valid OMB control number.

PETITION TO ACCEPT UNINTENTIONALLY DELAYED PAYMENT OF MAINTENANCE FEE IN AN EXPIRED PATENT (37 CFR 1.378(c))

Patent Number	Issue Date (YYYY-MM-DD)	Application Number	Filing Date (YYYY-MM-DD)	Docket Number (if applicable)
7185375	2007-03-06	10710634	2004-07-26	

CAUTION: Maintenance fee (and surcharge, if any) payment must correctly identify: (1) the patent number and (2) the application number of the actual U.S. application leading to issuance of that patent to ensure the fee(s) is/are associated with the correct patent. 37 CFR 1.366(c) and (d).

SMALL ENTITY
☒ Patentee claims, or has previously claimed, small entity status. See 37 CFR 1.27.

LOSS OF ENTITLEMENT TO SMALL ENTITY STATUS
☐ Patentee is no longer entitled to small entity status. See 37 CFR 1.27(g)

NOT Small Entity		Small Entity	
Fee	Code	Fee	Code
○ 3 ½ year	(1551)	● 3 ½ year	(2551)
○ 7 ½ year	(1552)	○ 7 ½ year	(2552)
○ 11 ½ year	(1553)	○ 11 ½ year	(2553)

SURCHARGE
The surcharge required by 37 CFR 1.20(i)(2) (Fee Code 1558) must be paid as a condition of accepting unintentionally delayed payment of the maintenance fee.

MAINTENANCE FEE (37 CFR 1.20(e)-(g))
The appropriate maintenance fee must be submitted with this petition.

STATEMENT
THE UNDERSIGNED CERTIFIES THAT THE DELAY IN PAYMENT OF THE MAINTENANCE FEE TO THIS PATENT WAS UNINTENTIONAL

PETITIONER(S) REQUEST THAT THE DELAYED PAYMENT OF THE MAINTENANCE FEE BE ACCEPTED AND THE PATENT REINSTATED

THIS PORTION MUST BE COMPLETED BY THE SIGNATORY OR SIGNATORIES

37 CFR 1.378(d) states: "Any petition under this section must be signed by an attorney or agent registered to practice before the Patent and Trademark Office, or by the patentee, the assignee, or other party in interest."

I certify, in accordance with 37 CFR 1.4(d)(4) that I am

○ An attorney or agent registered to practice before the Patent and Trademark Office

● A sole patentee

○ A joint patentee; I certify that I am authorized to sign this submission on behalf of all the other patentees.

○ A joint patentee; all of whom are signing this e-petition

○ The assignee of record of the entire interest

Under the Paperwork Reduction Act of 1995, no persons are required to respond to a collection of information unless it displays valid OMB control number.

Sole Patentee			
A signature of the applicant or representative is required in accordance with 37 CFR 1.33 and 10.18. Please see 37 CFR 1.4(d) for the form of the signature.			
Signature	/Tammy Z. Movsas/	Date (YYYY-MM-DD)	2012-01-23
Name	Tammy Z Movsas		

This collection of information is required by 37 CFR 1.378(c). The information is required to obtain or retain a benefit by the public which is to file (and by the USPTO to process) an application. Confidentiality is governed by 35 U.S.C. 122 and 37 CFR 1.11 and 1.14. This collection is estimated to take 1 hour to complete, including gathering, preparing, and submitting the completed application form to the USPTO. Time will vary depending upon the individual case. Any comments on the amount of time you require to complete this form and/ or suggestions for reducing this burden, should be sent to the Chief Information Officer, U.S. Patent and Trademark Office, U.S. Department of Commerce, P.O. Box 1450, Alexandria, VA 22313-1450. DO NOT SEND FEES OR COMPLETED FORMS TO THIS ADDRESS. **This form can only be used when in conjunction with EFS-Web. If this form is mailed to the USPTO, it may cause delays in reinstating the patent.**

Privacy Act Statement

The Privacy Act of 1974 (P.L. 93-579) requires that you be given certain information in connection with your submission of the attached form related to a patent application or patent. Accordingly, pursuant to the requirements of the Act, please be advised that: (1) the general authority for the collection of this information is 35 U.S.C. 2(b)(2); (2) furnishing of the information solicited is voluntary; and (3) the principal purpose for which the information is used by the U.S. Patent and Trademark Office is to process and/or examine your submission related to a patent application or patent. If you do not furnish the requested information, the U.S. Patent and Trademark Office may not be able to process and/or examine your submission, which may result in termination of proceedings or abandonment of the application or expiration of the patent.

The information provided by you in this form will be subject to the following routine uses:

1. The information on this form will be treated confidentially to the extent allowed under the Freedom of Information Act (5 U.S.C. 552) and the Privacy Act (5 U.S.C. 552a). Records from this system of records may be disclosed to the Department of Justice to determine whether the Freedom of Information Act requires disclosure of these records.

2. A record from this system of records may be disclosed, as a routine use, in the course of presenting evidence to a court, magistrate, or administrative tribunal, including disclosures to opposing counsel in the course of settlement negotiations.

3. A record in this system of records may be disclosed, as a routine use, to a Member of Congress submitting a request involving an individual, to whom the record pertains, when the individual has requested assistance from the Member with respect to the subject matter of the record.

4. A record in this system of records may be disclosed, as a routine use, to a contractor of the Agency having need for the information in order to perform a contract. Recipients of information shall be required to comply with the requirements of the Privacy Act of 1974, as amended, pursuant to 5 U.S.C. 552a(m).

5. A record related to an International Application filed under the Patent Cooperation Treaty in this system of records may be disclosed, as a routine use, to the International Bureau of the World Intellectual Property Organization, pursuant to the Patent Cooperation Treaty.

6. A record in this system of records may be disclosed, as a routine use, to another federal agency for purposes of National Security review (35 U.S.C. 181) and for review pursuant to the Atomic Energy Act (42 U.S.C. 218(c)).

7. A record from this system of records may be disclosed, as a routine use, to the Administrator, General Services, or his/her designee, during an inspection of records conducted by GSA as part of that agency's responsibility to recommend improvements in records management practices and programs, under authority of 44 U.S.C. 2904 and 2906. Such disclosure shall be made in accordance with the GSA regulations governing inspection of records for this purpose, and any other relevant (i.e., GSA or Commerce) directive. Such disclosure shall not be used to make determinations about individuals.

8. A record from this system of records may be disclosed, as a routine use, to the public after either publication of the application pursuant to 35 U.S.C. 122(b) or issuance of a patent pursuant to 35 U.S.C. 151. Further, a record may be disclosed, subject to the limitations of 37 CFR 1.14, as a routine use, to the public if the record was filed in an application which became abandoned or in which the proceedings were terminated and which application is referenced by either a published application, an application open to public inspections or an issued patent.

9. A record from this system of records may be disclosed, as a routine use, to a Federal, State, or local law enforcement agency, if the USPTO becomes aware of a violation or potential violation of law or regulation.

UNITED STATES PATENT AND TRADEMARK OFFICE

Commissioner for Patents
United States Patent and Trademark Office
P.O. Box 1450
Alexandria, VA 22313-1450
www.uspto.gov

In re Patent No. 7185375
Issue Date: March 6,2007
Application No. 10710634
Filed: July 26,2004
Attorney Docket No. 3075-05

:
:DECISION GRANTING PETITION
:UNDER 37 CFR 1.378(c)
:

This is a decision on the electronic petition, filed January 23,2012 ,under 37 CFR 1.378(c) to accept the unintentionally delayed payment of the 3.5 year maintenance fee for the above-identified patent.

The petition is **GRANTED**.

The maintenance fee is accepted, and the above-identified patent reinstated as of January 23,2012 .
This decision also constitutes notice that the fee has been accepted. An electronic copy of the petition and this decision has been created as an entry in the Image File Wrapper. Nevertheless, petitioner should print and retain an independent copy.

Telephone inquiries related to this electronic decision should be directed to the Electronic Business Center at 1-866-217-9197.

PTO/SB/66 (03-09)
Approved for use through 03/31/2012. OMB 0651-0016
U.S. Patent and Trademark Office: U.S. DEPARTMENT OF COMMERCE
Under the Paperwork Reduction Act of 1995, no persons are required to respond to a collection of information unless it displays valid OMB control number.

PETITION TO ACCEPT UNINTENTIONALLY DELAYED PAYMENT OF MAINTENANCE FEE IN AN EXPIRED PATENT (37 CFR 1.378(c))

Patent Number	Issue Date (YYYY-MM-DD)	Application Number	Filing Date (YYYY-MM-DD)	Docket Number (if applicable)
6,963,213	2005-11-08	10/710,670	2004-07-28	LKSP0106USA

CAUTION: Maintenance fee (and surcharge, if any) payment must correctly identify: (1) the patent number and (2) the application number of the actual U.S. application leading to issuance of that patent to ensure the fee(s) is/are associated with the correct patent. 37 CFR 1.366(c) and (d).

SMALL ENTITY
☐ Patentee claims, or has previously claimed, small entity status. See 37 CFR 1.27.

LOSS OF ENTITLEMENT TO SMALL ENTITY STATUS
☐ Patentee is no longer entitled to small entity status. See 37 CFR 1.27(g)

NOT Small Entity			Small Entity		
	Fee	Code		Fee	Code
◉	3 ½ year	(1551)	○	3 ½ year	(2551)
○	7 ½ year	(1552)	○	7 ½ year	(2552)
○	11 ½ year	(1553)	○	11 ½ year	(2553)

SURCHARGE
The surcharge required by 37 CFR 1.20(i)(2) (Fee Code 1558) must be paid as a condition of accepting unintentionally delayed payment of the maintenance fee.

MAINTENANCE FEE (37 CFR 1.20(e)-(g))
The appropriate maintenance fee must be submitted with this petition.

STATEMENT
THE UNDERSIGNED CERTIFIES THAT THE DELAY IN PAYMENT OF THE MAINTENANCE FEE TO THIS PATENT WAS UNINTENTIONAL

PETITIONER(S) REQUEST THAT THE DELAYED PAYMENT OF THE MAINTENANCE FEE BE ACCEPTED AND THE PATENT REINSTATED

THIS PORTION MUST BE COMPLETED BY THE SIGNATORY OR SIGNATORIES

37 CFR 1.378(d) states: "Any petition under this section must be signed by an attorney or agent registered to practice before the Patent and Trademark Office, or by the patentee, the assignee, or other party in interest."

I certify, in accordance with 37 CFR 1.4(d)(4) that I am

◉ An attorney or agent registered to practice before the Patent and Trademark Office

○ A sole patentee

○ A joint patentee; I certify that I am authorized to sign this submission on behalf of all the other patentees.

○ A joint patentee; all of whom are signing this e-petition

○ The assignee of record of the entire interest

Under the Paperwork Reduction Act of 1995, no persons are required to respond to a collection of information unless it displays valid OMB control number.

Patent Practitioner			
A signature of the applicant or representative is required in accordance with 37 CFR 1.33 and 10.18. Please see 37 CFR 1.4(d) for the form of the signature			
Signature	/Winston Hsu/	Date (YYYY-MM-DD)	2011-11-03
Name	Winston Hsu	Registration Number	41526

This collection of information is required by 37 CFR 1.378(c). The information is required to obtain or retain a benefit by the public which is to file (and by the USPTO to process) an application. Confidentiality is governed by 35 U.S.C. 122 and 37 CFR 1.11 and 1.14. This collection is estimated to take 1 hour to complete, including gathering, preparing, and submitting the completed application form to the USPTO. Time will vary depending upon the individual case. Any comments on the amount of time you require to complete this form and/ or suggestions for reducing this burden, should be sent to the Chief Information Officer, U.S. Patent and Trademark Office, U.S. Department of Commerce, P.O. Box 1450, Alexandria, VA 22313-1450. DO NOT SEND FEES OR COMPLETED FORMS TO THIS ADDRESS. **This form can only be used when in conjunction with EFS-Web. If this form is mailed to the USPTO, it may cause delays in reinstating the patent.**

Privacy Act Statement

The Privacy Act of 1974 (P.L. 93-579) requires that you be given certain information in connection with your submission of the attached form related to a patent application or patent. Accordingly, pursuant to the requirements of the Act, please be advised that: (1) the general authority for the collection of this information is 35 U.S.C. 2(b)(2); (2) furnishing of the information solicited is voluntary; and (3) the principal purpose for which the information is used by the U.S. Patent and Trademark Office is to process and/or examine your submission related to a patent application or patent. If you do not furnish the requested information, the U.S. Patent and Trademark Office may not be able to process and/or examine your submission, which may result in termination of proceedings or abandonment of the application or expiration of the patent.

The information provided by you in this form will be subject to the following routine uses:

1. The information on this form will be treated confidentially to the extent allowed under the Freedom of Information Act (5 U.S.C. 552) and the Privacy Act (5 U.S.C. 552a). Records from this system of records may be disclosed to the Department of Justice to determine whether the Freedom of Information Act requires disclosure of these records.

2. A record from this system of records may be disclosed, as a routine use, in the course of presenting evidence to a court, magistrate, or administrative tribunal, including disclosures to opposing counsel in the course of settlement negotiations.

3. A record in this system of records may be disclosed, as a routine use, to a Member of Congress submitting a request involving an individual, to whom the record pertains, when the individual has requested assistance from the Member with respect to the subject matter of the record.

4. A record in this system of records may be disclosed, as a routine use, to a contractor of the Agency having need for the information in order to perform a contract. Recipients of information shall be required to comply with the requirements of the Privacy Act of 1974, as amended, pursuant to 5 U.S.C. 552a(m).

5. A record related to an International Application filed under the Patent Cooperation Treaty in this system of records may be disclosed, as a routine use, to the International Bureau of the World Intellectual Property Organization, pursuant to the Patent Cooperation Treaty.

6. A record in this system of records may be disclosed, as a routine use, to another federal agency for purposes of National Security review (35 U.S.C. 181) and for review pursuant to the Atomic Energy Act (42 U.S.C. 218(c)).

7. A record from this system of records may be disclosed, as a routine use, to the Administrator, General Services, or his/her designee, during an inspection of records conducted by GSA as part of that agency's responsibility to recommend improvements in records management practices and programs, under authority of 44 U.S.C. 2904 and 2906. Such disclosure shall be made in accordance with the GSA regulations governing inspection of records for this purpose, and any other relevant (i.e., GSA or Commerce) directive. Such disclosure shall not be used to make determinations about individuals.

8. A record from this system of records may be disclosed, as a routine use, to the public after either publication of the application pursuant to 35 U.S.C. 122(b) or issuance of a patent pursuant to 35 U.S.C. 151. Further, a record may be disclosed, subject to the limitations of 37 CFR 1.14, as a routine use, to the public if the record was filed in an application which became abandoned or in which the proceedings were terminated and which application is referenced by either a published application, an application open to public inspections or an issued patent.

9. A record from this system of records may be disclosed, as a routine use, to a Federal, State, or local law enforcement agency, if the USPTO becomes aware of a violation or potential violation of law or regulation.

UNITED STATES PATENT AND TRADEMARK OFFICE

Commissioner for Patents
United States Patent and Trademark Office
P.O. Box 1450
Alexandria, VA 22313-1450
www.uspto.gov

In re Patent No. 6963213
Issue Date: November 8,2005
Application No. 10710670
Filed: July 28,2004
Attorney Docket No. 12778-US-PA

:

:DECISION GRANTING PETITION
:UNDER 37 CFR 1.378(c)

:

This is a decision on the electronic petition, filed November 3,2011 ,under 37 CFR 1.378(c) to accept the unintentionally delayed payment of the 3.5 year maintenance fee for the above-identified patent.

The petition is **GRANTED**.

The maintenance fee is accepted, and the above-identified patent reinstated as of November 3,2011 .
This decision also constitutes notice that the fee has been accepted. An electronic copy of the petition and this decision has been created as an entry in the Image File Wrapper. Nevertheless, petitioner should print and retain an independent copy.

Telephone inquiries related to this electronic decision should be directed to the Electronic Business Center at 1-866-217-9197.

UNITED STATES PATENT AND TRADEMARK OFFICE

Commissioner for Patents
United States Patent and Trademark Office
P.O. Box 1450
Alexandria, VA 22313-1450
www.uspto.gov

In re Patent No. 7205189
Issue Date: April 17,2007
Application No. 10710672
Filed: July 28,2004
Attorney Docket No. 13039-US-PA

:
:DECISION GRANTING PETITION
:UNDER 37 CFR 1.378(c)
:

This is a decision on the electronic petition, filed April 6,2012 ,under 37 CFR 1.378(c) to accept the unintentionally delayed payment of the 3.5 year maintenance fee for the above-identified patent.

The petition is **GRANTED**.

The maintenance fee is accepted, and the above-identified patent reinstated as of April 6,2012 .
This decision also constitutes notice that the fee has been accepted. An electronic copy of the petition and this decision has been created as an entry in the Image File Wrapper. Nevertheless, petitioner should print and retain an independent copy.

Telephone inquiries related to this electronic decision should be directed to the Electronic Business Center at 1-866-217-9197.

PTO/SB/66 (03-09)
Approved for use through 03/31/2012. OMB 0651-0016
U.S. Patent and Trademark Office: U.S. DEPARTMENT OF COMMERCE
Under the Paperwork Reduction Act of 1995, no persons are required to respond to a collection of information unless it displays valid OMB control number.

PETITION TO ACCEPT UNINTENTIONALLY DELAYED PAYMENT OF MAINTENANCE FEE IN AN EXPIRED PATENT (37 CFR 1.378(c))

Patent Number	Issue Date (YYYY-MM-DD)	Application Number	Filing Date (YYYY-MM-DD)	Docket Number (if applicable)
7,205,189	2007-04-17	10/710,672	2004-07-28	LKSP0157USA

CAUTION: Maintenance fee (and surcharge, if any) payment must correctly identify: (1) the patent number and (2) the application number of the actual U.S. application leading to issuance of that patent to ensure the fee(s) is/are associated with the correct patent. 37 CFR 1.366(c) and (d).

SMALL ENTITY
☐ Patentee claims, or has previously claimed, small entity status. See 37 CFR 1.27.

LOSS OF ENTITLEMENT TO SMALL ENTITY STATUS
☐ Patentee is no longer entitled to small entity status. See 37 CFR 1.27(g)

NOT Small Entity			Small Entity		
	Fee	Code		Fee	Code
◉	3 ½ year	(1551)	○	3 ½ year	(2551)
○	7 ½ year	(1552)	○	7 ½ year	(2552)
○	11 ½ year	(1553)	○	11 ½ year	(2553)

SURCHARGE
The surcharge required by 37 CFR 1.20(i)(2) (Fee Code 1558) must be paid as a condition of accepting unintentionally delayed payment of the maintenance fee.

MAINTENANCE FEE (37 CFR 1.20(e)-(g))
The appropriate maintenance fee must be submitted with this petition.

STATEMENT
THE UNDERSIGNED CERTIFIES THAT THE DELAY IN PAYMENT OF THE MAINTENANCE FEE TO THIS PATENT WAS UNINTENTIONAL

PETITIONER(S) REQUEST THAT THE DELAYED PAYMENT OF THE MAINTENANCE FEE BE ACCEPTED AND THE PATENT REINSTATED

THIS PORTION MUST BE COMPLETED BY THE SIGNATORY OR SIGNATORIES

37 CFR 1.378(d) states: "Any petition under this section must be signed by an attorney or agent registered to practice before the Patent and Trademark Office, or by the patentee, the assignee, or other party in interest."

I certify, in accordance with 37 CFR 1.4(d)(4) that I am

◉ An attorney or agent registered to practice before the Patent and Trademark Office

○ A sole patentee

○ A joint patentee; I certify that I am authorized to sign this submission on behalf of all the other patentees.

○ A joint patentee; all of whom are signing this e-petition

○ The assignee of record of the entire interest

Under the Paperwork Reduction Act of 1995, no persons are required to respond to a collection of information unless it displays valid OMB control number.

Patent Practitioner			
A signature of the applicant or representative is required in accordance with 37 CFR 1.33 and 10.18. Please see 37 CFR 1.4(d) for the form of the signature			
Signature	/Winston Hsu/	Date (YYYY-MM-DD)	2012-04-06
Name	Winston Hsu	Registration Number	41526

This collection of information is required by 37 CFR 1.378(c). The information is required to obtain or retain a benefit by the public which is to file (and by the USPTO to process) an application. Confidentiality is governed by 35 U.S.C. 122 and 37 CFR 1.11 and 1.14. This collection is estimated to take 1 hour to complete, including gathering, preparing, and submitting the completed application form to the USPTO. Time will vary depending upon the individual case. Any comments on the amount of time you require to complete this form and/ or suggestions for reducing this burden, should be sent to the Chief Information Officer, U.S. Patent and Trademark Office, U.S. Department of Commerce, P.O. Box 1450, Alexandria, VA 22313-1450. DO NOT SEND FEES OR COMPLETED FORMS TO THIS ADDRESS. **This form can only be used when in conjunction with EFS-Web. If this form is mailed to the USPTO, it may cause delays in reinstating the patent.**

Privacy Act Statement

The Privacy Act of 1974 (P.L. 93-579) requires that you be given certain information in connection with your submission of the attached form related to a patent application or patent. Accordingly, pursuant to the requirements of the Act, please be advised that: (1) the general authority for the collection of this information is 35 U.S.C. 2(b)(2); (2) furnishing of the information solicited is voluntary; and (3) the principal purpose for which the information is used by the U.S. Patent and Trademark Office is to process and/or examine your submission related to a patent application or patent. If you do not furnish the requested information, the U.S. Patent and Trademark Office may not be able to process and/or examine your submission, which may result in termination of proceedings or abandonment of the application or expiration of the patent.

The information provided by you in this form will be subject to the following routine uses:

1. The information on this form will be treated confidentially to the extent allowed under the Freedom of Information Act (5 U.S.C. 552) and the Privacy Act (5 U.S.C. 552a). Records from this system of records may be disclosed to the Department of Justice to determine whether the Freedom of Information Act requires disclosure of these records.

2. A record from this system of records may be disclosed, as a routine use, in the course of presenting evidence to a court, magistrate, or administrative tribunal, including disclosures to opposing counsel in the course of settlement negotiations.

3. A record in this system of records may be disclosed, as a routine use, to a Member of Congress submitting a request involving an individual, to whom the record pertains, when the individual has requested assistance from the Member with respect to the subject matter of the record.

4. A record in this system of records may be disclosed, as a routine use, to a contractor of the Agency having need for the information in order to perform a contract. Recipients of information shall be required to comply with the requirements of the Privacy Act of 1974, as amended, pursuant to 5 U.S.C. 552a(m).

5. A record related to an International Application filed under the Patent Cooperation Treaty in this system of records may be disclosed, as a routine use, to the International Bureau of the World Intellectual Property Organization, pursuant to the Patent Cooperation Treaty.

6. A record in this system of records may be disclosed, as a routine use, to another federal agency for purposes of National Security review (35 U.S.C. 181) and for review pursuant to the Atomic Energy Act (42 U.S.C. 218(c)).

7. A record from this system of records may be disclosed, as a routine use, to the Administrator, General Services, or his/her designee, during an inspection of records conducted by GSA as part of that agency's responsibility to recommend improvements in records management practices and programs, under authority of 44 U.S.C. 2904 and 2906. Such disclosure shall be made in accordance with the GSA regulations governing inspection of records for this purpose, and any other relevant (i.e., GSA or Commerce) directive. Such disclosure shall not be used to make determinations about individuals.

8. A record from this system of records may be disclosed, as a routine use, to the public after either publication of the application pursuant to 35 U.S.C. 122(b) or issuance of a patent pursuant to 35 U.S.C. 151. Further, a record may be disclosed, subject to the limitations of 37 CFR 1.14, as a routine use, to the public if the record was filed in an application which became abandoned or in which the proceedings were terminated and which application is referenced by either a published application, an application open to public inspections or an issued patent.

9. A record from this system of records may be disclosed, as a routine use, to a Federal, State, or local law enforcement agency, if the USPTO becomes aware of a violation or potential violation of law or regulation.

UNITED STATES PATENT AND TRADEMARK OFFICE

Commissioner for Patents
United States Patent and Trademark Office
P.O. Box 1450
Alexandria, VA 22313-1450
www.uspto.gov

GREENBERG & LIEBERMAN, LLC
2141 WISCONSIN AVE, N.W.
SUITE C-2
WASHINGTON, DC 20007

MAILED
APR 12 2011
OFFICE OF PETITIONS

In re Application of Joel Fried, et. al. Application No. 10/710,689 Filed: July 28, 2004 Attorney Docket No. 2361-3	: : : : :	ON PETITION

This is a decision on the petition under 37 CFR 1.137(b), filed March 22, 2011, to revive the above-identified application.

The application became abandoned for failure to file a proper reply to the final Office action mailed on January 27, 2010. A Notice of Abandonment was mailed on August 24, 2010.

The petition satisfies the requirements of 37 CFR 1.137(b) in that petitioner has supplied (1) the reply in the form of a Request for Continued Examination (RCE) along with the $405 fee and required submission under 37 CFR 1.114; (2) the petition fee of $810; and (3) a proper statement of unintentional delay. Therefore, the petition is **GRANTED**.

This application file is being referred to Technology Center Art Unit 3611 for processing of the RCE.

Telephone inquiries concerning this decision should be directed to the undersigned at (571) 272-3226.

Andrea Smith
Petitions Examiner
Office of Petitions

UNITED STATES PATENT AND TRADEMARK OFFICE

Commissioner for Patents
United States Patent and Trademark Office
P.O. Box 1450
Alexandria, VA 22313-1450
www.uspto.gov

Decision Date : July 27,2011

In re Application of :

Kevin Koch

Application No : 10710796

Filed: 03-Aug-2004

Attorney Docket No : 52438.830008.US1

DECISION ON REQUEST TO WITHDRAW AS ATTORNEY/AGENT OF RECORD

This is an electronic decision on the Request to Withdraw as attorney or agent of record under 37 CFR.§ 1.36(b), filed July 27,2011

The request is **APPROVED**

The request was signed by Brian Kinnear (registration no. 43717) on behalf of all the attorneys/agents of record. All attorneys/agents of record have been withdrawn.

Since there are no remaining attorneys of record, all future communications from the Office will be directed the first named inventor or assignee that has properly made itself of record pursuant to 37 CFR 3.71 with correspondence address:

Name	Jaclyn Sprtel
Name2	Thomson Reuters
Address 1	610 Opperman Drive
Address 2	
City	Eagan
State	MN
Postal Code	55123
Country	US

As a reminder, requester is required to inform the first named inventor or assignee that has properly made itself of record pursuant to 37 CFR 3.71 of the electronically processed petition.

Telephone inquiries concerning this decision should be directed to the Patent Electronic Business Center (EBC) at 866-217-9197.

Office of Petitions

Doc Code: PET.AUTO **Document Description: Petition automatically granted by EFS-Web**	PTO/SB/83 U.S. Patent and Trademark Office Department of Commerce

Electronic Petition Request	**REQUEST FOR WITHDRAWAL AS ATTORNEY OR AGENT AND CHANGE OF CORRESPONDENCE ADDRESS**
Application Number	10710796
Filing Date	03-Aug-2004
First Named Inventor	Kevin Koch
Art Unit	2176
Examiner Name	JAMES DEBROW
Attorney Docket Number	52438.830008.US1
Title	COMPUTER PROGRAM PRODUCT CONTAINING ELECTRONIC TRANSCRIPT AND EXHIBIT FILES AND METHOD FOR MAKING THE SAME

◉ Please withdraw me as attorney or agent for the above identified patent application and all the practitioners of record.

The reason(s) for this request are those described in 37 CFR:

10.40(b)(4)

Certifications

☒ I/We have given reasonable notice to the client, prior to the expiration of the response period, that the practitioner(s) intend to withdraw from employment

☒ I/We have delivered to the client or a duly authorized representative of the client all papers and property (including funds) to which the client is entitled

☒ I/We have notified the client of any responses that may be due and the time frame within which the client must respond

Change the correspondence address and direct all future correspondence to the first named inventor or assignee that has properly made itself of record pursuant to 37 CFR 3.71:

Name	Jaclyn Sprtel Thomson Reuters
Address	610 Opperman Drive
City	Eagan
State	MN
Postal Code	55123
Country	US

I am authorized to sign on behalf of myself and all withdrawing practitioners.	
Signature	/Brian Kinnear/
Name	Brian Kinnear
Registration Number	43717

UNITED STATES PATENT AND TRADEMARK OFFICE

Commissioner for Patents
United States Patent and Trademark Office
P.O. Box 1450
Alexandria, VA 22313-1450
www.uspto.gov

VRBIA, INC.
DAVID DORT
BOX 320069
ALEXANDRIA VA 22320

MAILED
FEB 15 2011
OFFICE OF PETITIONS

In re Application of	:	
David Bogart DORT	:	
Application No. 10/710,856	:	DECISION ON PETITION
Filed: August 08, 2004	:	
Attorney Docket No. VRBA.P016.A	:	

This is a decision on the petition, filed October 15, 2010, which is being treated as a petition under 37 CFR 1.8(b), requesting withdrawal of the holding of abandonment in the above-identified application.

The petition is **GRANTED**.

This application became abandoned as a result of petitioner's failure to file an appeal brief (and fee required by 37 CFR 41.20(b)(2)) within the time period provided in 37 CFR 41.37(a)(1). As an appeal brief (and appeal brief fee) was not filed within two (2) months of the Notice of Appeal filed February 26, 2010, and no extensions of time under the provisions of 37 CFR 1.136(a) were obtained, the appeal was dismissed and the proceedings as to the rejected claims were terminated. See 37 CFR 1.197(b). As no claim was allowed, the application became abandoned on April 27, 2010. *See* MPEP 1215.04.

Petitioner states that a timely reply was mailed via certificate of mailing on June 28, 2010. Petitioner has submitted a copy of the previously mailed correspondence, which bears a certificate of mailing dated June 28, 2010 and a stamped post card dated July 06, 2010 from the Board of Patent Appeals and Interferences, which would have rendered the reply timely if received.

The file record does not include the originally submitted papers. Failure to receive correspondence which includes a certificate of mailing or certificate of facsimile transmission is addressed in 37 CFR 1.8(b), reproduced below:

In the event that correspondence is considered timely filed by being mailed or transmitted in accordance with paragraph (a) of this section, but not received in the U.S. Patent and Trademark Office after a reasonable amount of time has elapsed from the time of mailing or transmitting of the correspondence, or after the application is held to be abandoned, or after the proceeding is dismissed, terminated, or decided with prejudice, the correspondence will be considered timely if the party who forwarded such correspondence:

(1) Informs the Office of the previous mailing or transmission of the correspondence promptly after becoming aware that the Office has no evidence of receipt of the correspondence;

(2) Supplies an additional copy of the previously mailed or transmitted correspondence and certificate; and

(3) Includes a statement which attests on a personal knowledge basis or to the satisfaction of the Director to the previous timely mailing or transmission. If the correspondence was sent by facsimile transmission, a copy of the sending unit's report confirming transmission may be used to support this statement.

The petition satisfies the above requirements of 37 CFR 1.8(b). Accordingly, the holding of abandonment for failure to timely file a reply to the Notice of Appeal filed February 26, 2010 is hereby withdrawn and the application restored to pending status.

The copy of the reply received with the petition will be accepted in place of the reply shown to have been mailed (or transmitted by facsimile) on June 28, 2010.

Telephone inquiries concerning this decision should be directed to Michelle R. Eason at (571) 272-4231.

This application is being referred to Technology Center AU 3694 for appropriate action in the normal course of business on the reply received with petition.

Thurman K. Page

Thurman K. Page
Petitions Examiner
Office of Petitions

UNITED STATES PATENT AND TRADEMARK OFFICE

Commissioner for Patents
United States Patent and Trademark Office
P.O. Box 1450
Alexandria, VA 22313-1450
www.uspto.gov

NORTH AMERICA INTELLECTUAL PROPERTY CORPORATION
P.O. BOX 506
MERRIFIELD VA 22116

MAILED

AUG 17 2010

OFFICE OF PETITIONS

In re Application of
Meng-Chi Liou et al
Application No. 10/710,887
Filed: August 10, 2004
Attorney Docket No. CPTP0002USA

DECISION ON REQUEST FOR REFUND

This is a decision on the Request For Refund filed July 9, 2010 and resubmitted on July 13, 2010.

The request is **GRANTED**.

Applicants filed the above request for refund of ($500.00), the petition and certificate of correction fees charged on September 7, 2007 (accounting date). A request for transliteration error correction of the first inventor's name was submitted on May 3, 2007, prior to payment of the issue fee. An amendment after Notice of Allowance to substitute the title to the specification was submitted on June 12, 2007. A reminder of the above was submitted with the payment of the issue fee on June 13, 2007.

A review of Office records show that a filing receipt was mailed on June 20, 2007, to show the correction of the inventor's name. However, the application issued on July 24, 2007, without the desired change. A request for certificate of correction was filed on August 27, 2007, and granted on September 7, 2007.

Applicant now files the above request for refund, namely since the correction of the inventor's name was perfected prior to issuance. In view of the above, the total of $500.00 is being refunded to petitioner's deposit account as requested.

A copy of a corrected filing receipt is attached for your convenience.

Any questions concerning this matter may be directed to the undersigned at (571) 272-3208.

/KOC/
Karen Creasy
Petitions Examiner
Office of Petitions

ATTACHMENT: Copy of Corrected Filing Receipt

UNITED STATES PATENT AND TRADEMARK OFFICE

UNITED STATES DEPARTMENT OF COMMERCE
United States Patent and Trademark Office
Address: COMMISSIONER FOR PATENTS
P.O. Box 1450
Alexandria, Virginia 22313-1450
www.uspto.gov

APPLICATION NUMBER	FILING or 371(c) DATE	GRP ART UNIT	FIL FEE REC'D	ATTY.DOCKET.NO	TOT CLAIMS	IND CLAIMS
10/710,887	08/10/2004	2871	1570	CPTP0002USA	17	2

CONFIRMATION NO. 4886

CORRECTED FILING RECEIPT

27765
NORTH AMERICA INTELLECTUAL PROPERTY CORPORATION
P.O. BOX 506
MERRIFIELD, VA 22116

OC000000042883486

Date Mailed: 08/04/2010

Receipt is acknowledged of this non-provisional patent application. The application will be taken up for examination in due course. Applicant will be notified as to the results of the examination. Any correspondence concerning the application must include the following identification information: the U.S. APPLICATION NUMBER, FILING DATE, NAME OF APPLICANT, and TITLE OF INVENTION. Fees transmitted by check or draft are subject to collection. Please verify the accuracy of the data presented on this receipt. **If an error is noted on this Filing Receipt, please submit a written request for a Filing Receipt Correction. Please provide a copy of this Filing Receipt with the changes noted thereon. If you received a "Notice to File Missing Parts" for this application, please submit any corrections to this Filing Receipt with your reply to the Notice. When the USPTO processes the reply to the Notice, the USPTO will generate another Filing Receipt incorporating the requested corrections**

Applicant(s)

Meng-Chi Liou, Tao-Yuan Hsien, TAIWAN;
Chung-Ge Lin, Tao-Yuan City, TAIWAN;
Kuang-Shyang Lin, Tao-Yuan Hsien, RWANDA;
Fu-Yuan Shiau, Chia-I City, TAIWAN;

Power of Attorney: The patent practitioners associated with Customer Number 027765

Domestic Priority data as claimed by applicant

Foreign Applications
TAIWAN 093110689 04/16/2004

If Required, Foreign Filing License Granted: 09/10/2004

The country code and number of your priority application, to be used for filing abroad under the Paris Convention, is **US 10/710,887**

Projected Publication Date: Not Applicable

Non-Publication Request: No

Early Publication Request: No

Title

MULTI-DOMAIN VERTICAL ALIGNMENT LIQUID CRYSTAL DISPLAY PANEL COMPRISING ALTERNATING AND PARALLEL SLITS AND PROTRUSIONS

Preliminary Class

349

PROTECTING YOUR INVENTION OUTSIDE THE UNITED STATES

Since the rights granted by a U.S. patent extend only throughout the territory of the United States and have no effect in a foreign country, an inventor who wishes patent protection in another country must apply for a patent in a specific country or in regional patent offices. Applicants may wish to consider the filing of an international application under the Patent Cooperation Treaty (PCT). An international (PCT) application generally has the same effect as a regular national patent application in each PCT-member country. The PCT process **simplifies** the filing of patent applications on the same invention in member countries, but **does not result** in a grant of "an international patent" and does not eliminate the need of applicants to file additional documents and fees in countries where patent protection is desired.

Almost every country has its own patent law, and a person desiring a patent in a particular country must make an application for patent in that country in accordance with its particular laws. Since the laws of many countries differ in various respects from the patent law of the United States, applicants are advised to seek guidance from specific foreign countries to ensure that patent rights are not lost prematurely.

Applicants also are advised that in the case of inventions made in the United States, the Director of the USPTO must issue a license before applicants can apply for a patent in a foreign country. The filing of a U.S. patent application serves as a request for a foreign filing license. The application's filing receipt contains further information and guidance as to the status of applicant's license for foreign filing.

Applicants may wish to consult the USPTO booklet, "General Information Concerning Patents" (specifically, the section entitled "Treaties and Foreign Patents") for more information on timeframes and deadlines for filing foreign patent applications. The guide is available either by contacting the USPTO Contact Center at 800-786-9199, or it can be viewed on the USPTO website at http://www.uspto.gov/web/offices/pac/doc/general/index.html.

For information on preventing theft of your intellectual property (patents, trademarks and copyrights), you may wish to consult the U.S. Government website, http://www.stopfakes.gov. Part of a Department of Commerce initiative, this website includes self-help "toolkits" giving innovators guidance on how to protect intellectual property in specific countries such as China, Korea and Mexico. For questions regarding patent enforcement issues, applicants may call the U.S. Government hotline at 1-866-999-HALT (1-866-999-4158).

LICENSE FOR FOREIGN FILING UNDER

Title 35, United States Code, Section 184

Title 37, Code of Federal Regulations, 5.11 & 5.15

GRANTED

The applicant has been granted a license under 35 U.S.C. 184, if the phrase "IF REQUIRED, FOREIGN FILING LICENSE GRANTED" followed by a date appears on this form. Such licenses are issued in all applications where

the conditions for issuance of a license have been met, regardless of whether or not a license may be required as set forth in 37 CFR 5.15. The scope and limitations of this license are set forth in 37 CFR 5.15(a) unless an earlier license has been issued under 37 CFR 5.15(b). The license is subject to revocation upon written notification. The date indicated is the effective date of the license, unless an earlier license of similar scope has been granted under 37 CFR 5.13 or 5.14.

This license is to be retained by the licensee and may be used at any time on or after the effective date thereof unless it is revoked. This license is automatically transferred to any related applications(s) filed under 37 CFR 1.53(d). This license is not retroactive.

The grant of a license does not in any way lessen the responsibility of a licensee for the security of the subject matter as imposed by any Government contract or the provisions of existing laws relating to espionage and the national security or the export of technical data. Licensees should apprise themselves of current regulations especially with respect to certain countries, of other agencies, particularly the Office of Defense Trade Controls, Department of State (with respect to Arms, Munitions and Implements of War (22 CFR 121-128)); the Bureau of Industry and Security, Department of Commerce (15 CFR parts 730-774); the Office of Foreign AssetsControl, Department of Treasury (31 CFR Parts 500+) and the Department of Energy.

NOT GRANTED

No license under 35 U.S.C. 184 has been granted at this time, if the phrase "IF REQUIRED, FOREIGN FILING LICENSE GRANTED" DOES NOT appear on this form. Applicant may still petition for a license under 37 CFR 5.12, if a license is desired before the expiration of 6 months from the filing date of the application. If 6 months has lapsed from the filing date of this application and the licensee has not received any indication of a secrecy order under 35 U.S.C. 181, the licensee may foreign file the application pursuant to 37 CFR 5.15(b).

UNITED STATES PATENT AND TRADEMARK OFFICE

Commissioner for Patents
United States Patent and Trademark Office
P.O. Box 1450
Alexandria, VA 22313-1450
www.uspto.gov

SMITH HOPEN, PA
180 PINE AVENUE NORTH
OLDSMAR FL 34677

MAILED

AUG 03 2010

OFFICE OF PETITIONS

In re Patent No. 7,118,922 :
Issue Date: October 10, 2006 :
Application No. 10/710,986 : DECISION ON PETITION
Filed: August 16, 2004 :
Attorney Docket No. 1372.185.PRC :

This is a decision on the Request For Certificate Of Correction Under 37 C.F.R. §1.323, filed April 20, 2010, requesting correction on the Title Page of the subject patent to add "*University of Central Florida*" as an additional assignee. The Request is being treated as a Petition Under 37 CFR §3.81(b). A completed Certificate of Correction Form (PTO/SB/44) was submitted with the petition.

The petition under 37 CFR §3.81(b) is **DISMISSED**.

Petitioner urges that the present Petition was submitted to add "*University of Central Florida, Orlando, FL (US)*" on the previously submitted PTOL-85B and that such error was the fault of the Applicant. Accordingly, petitioner requests, in effect, that the Title Page of the above-identified patent be corrected, via issuance of a Certificate of Correction (PTO/SB/44), to add the additional assignee's name as follows:

--University of Central Florida, Orlando, FL (US)--

37 CFR 3.81(b), effective June 25, 2004, reads:

> *After payment of the issue fee:* Any request for issuance of an application in the name of the assignee submitted after the date of payment of the issue fee, and any request for a patent to be corrected to state the name of the assignee, must state that the assignment was submitted for recordation as set forth in § 3.11 before issuance of the patent, and must include a request for a certificate of correction under § 1.323 of this chapter (accompanied by the fee set forth in § 1.20(a) and the processing fee set forth in § 1.17(i) of this chapter.

U.S. Patent and Trademark Office assignments records disclose that an assignment "*University of Central Florida, Orlando, FL*" was submitted for recordation on March 3, 2010. Therefore, the recorded assignment was **after the date of issuance of this patent**. Accordingly, since the assignment was not submitted for recordation until after issuance of this patent, issuance of a certification of correction would not be proper.

Also, a Petition Under 37 CFR §3.81(b) requires a petition processing fee of $130.00 (Fee Code 1464), as set forth under 37 CFR 1.17(i). This petition lacks the fee. For this reason, the petition is dismissed.

Inquiries related this communication should be directed to the undersigned at (571)272-3213.

Cheryl Gibson-Baylor
Petitions Examiner
Office of Petitions

UNITED STATES PATENT AND TRADEMARK OFFICE

Commissioner for Patents
United States Patent and Trademark Office
P.O. Box 1450
Alexandria, VA 22313-1450
www.uspto.gov

Patent No. : 7072924
Application No.: 10/711115
Inventor(s) : Stephen Clark Purcell et al.
Issued : 07/04/2006
Docket No. : 07-471-A

Re: Request for Certificate of Correction

Consideration has been given to your request for the issuance of a Certificate of Correction For the above-identified patent under the provisions of Rule(s) 1.322.

Respecting the alleged error, on the Title page, Item 76 Inventors: Line 6, is printed according to the record. This office does not correct the citizenship of the inventors.

In view of the foregoing, your request, in this matter, is hereby denied.

Tasneem Siddiqui
For Mary Diggs (Supervisor)
Decisions & Certificates of Correction Branch
(703) 756-1593 or (703) 756-1814
Date: 12/22/2010

Address: Thomas J. Loos
McDonnell Boehnen Hulbert & Berghoff LLP
300 S. Wacker Drive, Suite 3200
Chicago, IL 60606

ts/MD

UNITED STATES PATENT AND TRADEMARK OFFICE

UNITED STATES DEPARTMENT OF COMMERCE
United States Patent and Trademark Office
Address: COMMISSIONER FOR PATENTS
P.O. Box 1450
Alexandria, Virginia 22313-1450
www.uspto.gov

APPLICATION NO.	FILING DATE	FIRST NAMED INVENTOR	ATTORNEY DOCKET NO.	CONFIRMATION NO.
10/711,389	09/15/2004	Werner Zumbrunn	095473-0106	5388

22428 7590 11/17/2011
FOLEY AND LARDNER LLP
SUITE 500
3000 K STREET NW
WASHINGTON, DC 20007

EXAMINER
MERCIER, MELISSA S

ART UNIT	PAPER NUMBER
1615	

'MAIL DATE	DELIVERY MODE
11/17/2011	PAPER

Please find below and/or attached an Office communication concerning this application or proceeding.

The time period for reply, if any, is set in the attached communication.

UNITED STATES PATENT AND TRADEMARK OFFICE

Commissioner for Patents
United States Patent and Trademark Office
P.O. Box 1450
Alexandria, VA 22313-1450
www.uspto.gov

NOV 1 7 2011

FOLEY AND LARDNER LLP
SUITE 500
3000 K STREET, NW
WASHINGTON, DC 20007

In re Application of:	:
Zumbrunn, et al.	: PETITION DECISION
Serial No.: 10/711,389.	:
Filed: September 15, 2004	:
Attorney Docket No.: **095473-0106**	

This is in response to the petition under 37 CFR § 1.181, filed November 9, 2011, requesting that the final Office action of May 10, 2011 be withdrawn.

Applicants' arguments have been accorded careful consideration but they are not persuasive for the following reasons. The petition was untimely and therefore the merits of such won't be considered. Applicant should note that 37 CFR 1.181(f) indicates that any petition not filed within two months of the mailing date of the action from which relief is requested may be dismissed as untimely, that action being the final rejection of May 10, 2011. If the applicant wants consideration after the two months they should file a petition, and corresponding petition fee for such, under 37 CFR 1.183 and ask for a suspension of the Rule 181 and ask that consideration be made later than the 2 months.

Accordingly, the petition filed under 37 CFR 1. 181 is **DISMISSED** as untimely.

Should there be any questions about this decision please contact Marianne C. Seidel, by letter addressed to Director, TC 1600, at the address listed above, or by telephone at 571-272-0584 or by facsimile sent to the general Office facsimile number, 571-273-8300.

Remy Yucel
Director, Technology Center 1600

UNITED STATES PATENT AND TRADEMARK OFFICE

Commissioner for Patents
United States Patent and Trademark Office
P.O. Box 1450
Alexandria, VA 22313-1450
www.uspto.gov

In re Patent No. 7060560
Issue Date: June 13,2006
Application No. 10711511
Filed: September 23,2004
Attorney Docket No. 13040-US-PA

:
:DECISION GRANTING PETITION
:UNDER 37 CFR 1.378(c)
:

This is a decision on the electronic petition, filed April 5,2012 ,under 37 CFR 1.378(c) to accept the unintentionally delayed payment of the 3.5 year maintenance fee for the above-identified patent.

The petition is **GRANTED**.

The maintenance fee is accepted, and the above-identified patent reinstated as of April 5,2012 .
This decision also constitutes notice that the fee has been accepted. An electronic copy of the petition and this decision has been created as an entry in the Image File Wrapper. Nevertheless, petitioner should print and retain an independent copy.

Telephone inquiries related to this electronic decision should be directed to the Electronic Business Center at 1-866-217-9197.

PTO/SB/66 (03-09)
Approved for use through 03/31/2012. OMB 0651-0016
U.S. Patent and Trademark Office: U.S. DEPARTMENT OF COMMERCE
Under the Paperwork Reduction Act of 1995, no persons are required to respond to a collection of information unless it displays valid OMB control number.

PETITION TO ACCEPT UNINTENTIONALLY DELAYED PAYMENT OF MAINTENANCE FEE IN AN EXPIRED PATENT (37 CFR 1.378(c))

Patent Number	Issue Date (YYYY-MM-DD)	Application Number	Filing Date (YYYY-MM-DD)	Docket Number (if applicable)
7,060,560	2006-06-13	10/711,511	2004-09-23	LKSP0126USA

CAUTION: Maintenance fee (and surcharge, if any) payment must correctly identify: (1) the patent number and (2) the application number of the actual U.S. application leading to issuance of that patent to ensure the fee(s) is/are associated with the correct patent. 37 CFR 1.366(c) and (d).

SMALL ENTITY
☐ Patentee claims, or has previously claimed, small entity status. See 37 CFR 1.27.

LOSS OF ENTITLEMENT TO SMALL ENTITY STATUS
☐ Patentee is no longer entitled to small entity status. See 37 CFR 1.27(g)

NOT Small Entity			Small Entity		
	Fee	Code		Fee	Code
◉	3 ½ year	(1551)	○	3 ½ year	(2551)
○	7 ½ year	(1552)	○	7 ½ year	(2552)
○	11 ½ year	(1553)	○	11 ½ year	(2553)

SURCHARGE
The surcharge required by 37 CFR 1.20(i)(2) (Fee Code 1558) must be paid as a condition of accepting unintentionally delayed payment of the maintenance fee.

MAINTENANCE FEE (37 CFR 1.20(e)-(g))
The appropriate maintenance fee must be submitted with this petition.

STATEMENT
THE UNDERSIGNED CERTIFIES THAT THE DELAY IN PAYMENT OF THE MAINTENANCE FEE TO THIS PATENT WAS UNINTENTIONAL

PETITIONER(S) REQUEST THAT THE DELAYED PAYMENT OF THE MAINTENANCE FEE BE ACCEPTED AND THE PATENT REINSTATED

THIS PORTION MUST BE COMPLETED BY THE SIGNATORY OR SIGNATORIES

37 CFR 1.378(d) states: "Any petition under this section must be signed by an attorney or agent registered to practice before the Patent and Trademark Office, or by the patentee, the assignee, or other party in interest."

I certify, in accordance with 37 CFR 1.4(d)(4) that I am

◉ An attorney or agent registered to practice before the Patent and Trademark Office

○ A sole patentee

○ A joint patentee; I certify that I am authorized to sign this submission on behalf of all the other patentees.

○ A joint patentee; all of whom are signing this e-petition

○ The assignee of record of the entire interest

Under the Paperwork Reduction Act of 1995, no persons are required to respond to a collection of information unless it displays valid OMB control number.

Patent Practitioner			
A signature of the applicant or representative is required in accordance with 37 CFR 1.33 and 10.18. Please see 37 CFR 1.4(d) for the form of the signature			
Signature	/Winston Hsu/	Date (YYYY-MM-DD)	2012-04-05
Name	Winston Hsu	Registration Number	41526

This collection of information is required by 37 CFR 1.378(c). The information is required to obtain or retain a benefit by the public which is to file (and by the USPTO to process) an application. Confidentiality is governed by 35 U.S.C. 122 and 37 CFR 1.11 and 1.14. This collection is estimated to take 1 hour to complete, including gathering, preparing, and submitting the completed application form to the USPTO. Time will vary depending upon the individual case. Any comments on the amount of time you require to complete this form and/ or suggestions for reducing this burden, should be sent to the Chief Information Officer, U.S. Patent and Trademark Office, U.S. Department of Commerce, P.O. Box 1450, Alexandria, VA 22313-1450. DO NOT SEND FEES OR COMPLETED FORMS TO THIS ADDRESS. **This form can only be used when in conjunction with EFS-Web. If this form is mailed to the USPTO, it may cause delays in reinstating the patent.**

Privacy Act Statement

The Privacy Act of 1974 (P.L. 93-579) requires that you be given certain information in connection with your submission of the attached form related to a patent application or patent. Accordingly, pursuant to the requirements of the Act, please be advised that: (1) the general authority for the collection of this information is 35 U.S.C. 2(b)(2); (2) furnishing of the information solicited is voluntary; and (3) the principal purpose for which the information is used by the U.S. Patent and Trademark Office is to process and/or examine your submission related to a patent application or patent. If you do not furnish the requested information, the U.S. Patent and Trademark Office may not be able to process and/or examine your submission, which may result in termination of proceedings or abandonment of the application or expiration of the patent.

The information provided by you in this form will be subject to the following routine uses:

1. The information on this form will be treated confidentially to the extent allowed under the Freedom of Information Act (5 U.S.C. 552) and the Privacy Act (5 U.S.C. 552a). Records from this system of records may be disclosed to the Department of Justice to determine whether the Freedom of Information Act requires disclosure of these records.

2. A record from this system of records may be disclosed, as a routine use, in the course of presenting evidence to a court, magistrate, or administrative tribunal, including disclosures to opposing counsel in the course of settlement negotiations.

3. A record in this system of records may be disclosed, as a routine use, to a Member of Congress submitting a request involving an individual, to whom the record pertains, when the individual has requested assistance from the Member with respect to the subject matter of the record.

4. A record in this system of records may be disclosed, as a routine use, to a contractor of the Agency having need for the information in order to perform a contract. Recipients of information shall be required to comply with the requirements of the Privacy Act of 1974, as amended, pursuant to 5 U.S.C. 552a(m).

5. A record related to an International Application filed under the Patent Cooperation Treaty in this system of records may be disclosed, as a routine use, to the International Bureau of the World Intellectual Property Organization, pursuant to the Patent Cooperation Treaty.

6. A record in this system of records may be disclosed, as a routine use, to another federal agency for purposes of National Security review (35 U.S.C. 181) and for review pursuant to the Atomic Energy Act (42 U.S.C. 218(c)).

7. A record from this system of records may be disclosed, as a routine use, to the Administrator, General Services, or his/her designee, during an inspection of records conducted by GSA as part of that agency's responsibility to recommend improvements in records management practices and programs, under authority of 44 U.S.C. 2904 and 2906. Such disclosure shall be made in accordance with the GSA regulations governing inspection of records for this purpose, and any other relevant (i.e., GSA or Commerce) directive. Such disclosure shall not be used to make determinations about individuals.

8. A record from this system of records may be disclosed, as a routine use, to the public after either publication of the application pursuant to 35 U.S.C. 122(b) or issuance of a patent pursuant to 35 U.S.C. 151. Further, a record may be disclosed, subject to the limitations of 37 CFR 1.14, as a routine use, to the public if the record was filed in an application which became abandoned or in which the proceedings were terminated and which application is referenced by either a published application, an application open to public inspections or an issued patent.

9. A record from this system of records may be disclosed, as a routine use, to a Federal, State, or local law enforcement agency, if the USPTO becomes aware of a violation or potential violation of law or regulation.

PTO/SB/66 (03-09)
Approved for use through 03/31/2012. OMB 0651-0016
U.S. Patent and Trademark Office: U.S. DEPARTMENT OF COMMERCE
Under the Paperwork Reduction Act of 1995, no persons are required to respond to a collection of information unless it displays valid OMB control number.

PETITION TO ACCEPT UNINTENTIONALLY DELAYED PAYMENT OF MAINTENANCE FEE IN AN EXPIRED PATENT (37 CFR 1.378(c))

Patent Number	Issue Date (YYYY-MM-DD)	Application Number	Filing Date (YYYY-MM-DD)	Docket Number (if applicable)
7,192,832	2007-03-20	10/711,535	2004-09-24	LKSP0082USA

CAUTION: Maintenance fee (and surcharge, if any) payment must correctly identify: (1) the patent number and (2) the application number of the actual U.S. application leading to issuance of that patent to ensure the fee(s) is/are associated with the correct patent. 37 CFR 1.366(c) and (d).

SMALL ENTITY
☐ Patentee claims, or has previously claimed, small entity status. See 37 CFR 1.27.

LOSS OF ENTITLEMENT TO SMALL ENTITY STATUS
☐ Patentee is no longer entitled to small entity status. See 37 CFR 1.27(g)

NOT Small Entity			Small Entity		
	Fee	Code		Fee	Code
◉	3 ½ year	(1551)	○	3 ½ year	(2551)
○	7 ½ year	(1552)	○	7 ½ year	(2552)
○	11 ½ year	(1553)	○	11 ½ year	(2553)

SURCHARGE
The surcharge required by 37 CFR 1.20(i)(2) (Fee Code 1558) must be paid as a condition of accepting unintentionally delayed payment of the maintenance fee.

MAINTENANCE FEE (37 CFR 1.20(e)-(g))
The appropriate maintenance fee must be submitted with this petition.

STATEMENT
THE UNDERSIGNED CERTIFIES THAT THE DELAY IN PAYMENT OF THE MAINTENANCE FEE TO THIS PATENT WAS UNINTENTIONAL

PETITIONER(S) REQUEST THAT THE DELAYED PAYMENT OF THE MAINTENANCE FEE BE ACCEPTED AND THE PATENT REINSTATED

THIS PORTION MUST BE COMPLETED BY THE SIGNATORY OR SIGNATORIES

37 CFR 1.378(d) states: "Any petition under this section must be signed by an attorney or agent registered to practice before the Patent and Trademark Office, or by the patentee, the assignee, or other party in interest."

I certify, in accordance with 37 CFR 1.4(d)(4) that I am

◉ An attorney or agent registered to practice before the Patent and Trademark Office

○ A sole patentee

○ A joint patentee; I certify that I am authorized to sign this submission on behalf of all the other patentees.

○ A joint patentee; all of whom are signing this e-petition

○ The assignee of record of the entire interest

Under the Paperwork Reduction Act of 1995, no persons are required to respond to a collection of information unless it displays valid OMB control number.

Patent Practitioner			
A signature of the applicant or representative is required in accordance with 37 CFR 1.33 and 10.18. Please see 37 CFR 1.4(d) for the form of the signature			
Signature	/Winston Hsu/	Date (YYYY-MM-DD)	2011-09-23
Name	Winston Hsu	Registration Number	41526

This collection of information is required by 37 CFR 1.378(c). The information is required to obtain or retain a benefit by the public which is to file (and by the USPTO to process) an application. Confidentiality is governed by 35 U.S.C. 122 and 37 CFR 1.11 and 1.14. This collection is estimated to take 1 hour to complete, including gathering, preparing, and submitting the completed application form to the USPTO. Time will vary depending upon the individual case. Any comments on the amount of time you require to complete this form and/ or suggestions for reducing this burden, should be sent to the Chief Information Officer, U.S. Patent and Trademark Office, U.S. Department of Commerce, P.O. Box 1450, Alexandria, VA 22313-1450. DO NOT SEND FEES OR COMPLETED FORMS TO THIS ADDRESS. **This form can only be used when in conjunction with EFS-Web. If this form is mailed to the USPTO, it may cause delays in reinstating the patent.**

Privacy Act Statement

The Privacy Act of 1974 (P.L. 93-579) requires that you be given certain information in connection with your submission of the attached form related to a patent application or patent. Accordingly, pursuant to the requirements of the Act, please be advised that: (1) the general authority for the collection of this information is 35 U.S.C. 2(b)(2); (2) furnishing of the information solicited is voluntary; and (3) the principal purpose for which the information is used by the U.S. Patent and Trademark Office is to process and/or examine your submission related to a patent application or patent. If you do not furnish the requested information, the U.S. Patent and Trademark Office may not be able to process and/or examine your submission, which may result in termination of proceedings or abandonment of the application or expiration of the patent.

The information provided by you in this form will be subject to the following routine uses:

1. The information on this form will be treated confidentially to the extent allowed under the Freedom of Information Act (5 U.S.C. 552) and the Privacy Act (5 U.S.C. 552a). Records from this system of records may be disclosed to the Department of Justice to determine whether the Freedom of Information Act requires disclosure of these records.

2. A record from this system of records may be disclosed, as a routine use, in the course of presenting evidence to a court, magistrate, or administrative tribunal, including disclosures to opposing counsel in the course of settlement negotiations.

3. A record in this system of records may be disclosed, as a routine use, to a Member of Congress submitting a request involving an individual, to whom the record pertains, when the individual has requested assistance from the Member with respect to the subject matter of the record.

4. A record in this system of records may be disclosed, as a routine use, to a contractor of the Agency having need for the information in order to perform a contract. Recipients of information shall be required to comply with the requirements of the Privacy Act of 1974, as amended, pursuant to 5 U.S.C. 552a(m).

5. A record related to an International Application filed under the Patent Cooperation Treaty in this system of records may be disclosed, as a routine use, to the International Bureau of the World Intellectual Property Organization, pursuant to the Patent Cooperation Treaty.

6. A record in this system of records may be disclosed, as a routine use, to another federal agency for purposes of National Security review (35 U.S.C. 181) and for review pursuant to the Atomic Energy Act (42 U.S.C. 218(c)).

7. A record from this system of records may be disclosed, as a routine use, to the Administrator, General Services, or his/her designee, during an inspection of records conducted by GSA as part of that agency's responsibility to recommend improvements in records management practices and programs, under authority of 44 U.S.C. 2904 and 2906. Such disclosure shall be made in accordance with the GSA regulations governing inspection of records for this purpose, and any other relevant (i.e., GSA or Commerce) directive. Such disclosure shall not be used to make determinations about individuals.

8. A record from this system of records may be disclosed, as a routine use, to the public after either publication of the application pursuant to 35 U.S.C. 122(b) or issuance of a patent pursuant to 35 U.S.C. 151. Further, a record may be disclosed, subject to the limitations of 37 CFR 1.14, as a routine use, to the public if the record was filed in an application which became abandoned or in which the proceedings were terminated and which application is referenced by either a published application, an application open to public inspections or an issued patent.

9. A record from this system of records may be disclosed, as a routine use, to a Federal, State, or local law enforcement agency, if the USPTO becomes aware of a violation or potential violation of law or regulation.

UNITED STATES PATENT AND TRADEMARK OFFICE

Commissioner for Patents
United States Patent and Trademark Office
P.O. Box 1450
Alexandria, VA 22313-1450
www.uspto.gov

In re Patent No. 7192832
Issue Date: March 20,2007
Application No. 10711535
Filed: September 24,2004
Attorney Docket No. 11041-US-PA-1

:
:DECISION GRANTING PETITION
:UNDER 37 CFR 1.378(c)
:

This is a decision on the electronic petition, filed September 23,2011 ,under 37 CFR 1.378(c) to accept the unintentionally delayed payment of the 3.5 year maintenance fee for the above-identified patent.

The petition is **GRANTED**.

The maintenance fee is accepted, and the above-identified patent reinstated as of September 23,2011 . This decision also constitutes notice that the fee has been accepted. An electronic copy of the petition and this decision has been created as an entry in the Image File Wrapper. Nevertheless, petitioner should print and retain an independent copy.

Telephone inquiries related to this electronic decision should be directed to the Electronic Business Center at 1-866-217-9197.

UNITED STATES PATENT AND TRADEMARK OFFICE

Commissioner for Patents
United States Patent and Trademark Office
P.O. Box 1450
Alexandria, VA 22313-1450
www.uspto.gov

In re Patent No. 7167422
Issue Date: January 23,2007
Application No. 10711545
Filed: September 24,2004
Attorney Docket No. ACMP0246USA

:
:DECISION GRANTING PETITION
:UNDER 37 CFR 1.378(c)
:

This is a decision on the electronic petition, filed February 18,2011 ,under 37 CFR 1.378(c) to accept the unintentionally delayed payment of the 3.5 year maintenance fee for the above-identified patent.

The petition is **GRANTED**.

The maintenance fee is accepted, and the above-identified patent reinstated as of February 18,2011 . This decision also constitutes notice that the fee has been accepted. An electronic copy of the petition and this decision has been created as an entry in the Image File Wrapper. Nevertheless, petitioner should print and retain an independent copy.

Telephone inquiries related to this electronic decision should be directed to the Electronic Business Center at 1-866-217-9197.

UNITED STATES PATENT AND TRADEMARK OFFICE

Commissioner for Patents
United States Patent and Trademark Office
P.O. Box 1450
Alexandria, VA 22313-1450
www.uspto.gov

In re Patent No. 7019582
Issue Date: March 28,2006
Application No. 10711624
Filed: September 29,2004
Attorney Docket No. 9919-US-PA-1

:
:DECISION GRANTING PETITION
:UNDER 37 CFR 1.378(c)
:

This is a decision on the electronic petition, filed March 5,2012 ,under 37 CFR 1.378(c) to accept the unintentionally delayed payment of the 3.5 year maintenance fee for the above-identified patent.

The petition is **GRANTED**.

The maintenance fee is accepted, and the above-identified patent reinstated as of March 5,2012 .
This decision also constitutes notice that the fee has been accepted. An electronic copy of the petition and this decision has been created as an entry in the Image File Wrapper. Nevertheless, petitioner should print and retain an independent copy.

Telephone inquiries related to this electronic decision should be directed to the Electronic Business Center at 1-866-217-9197.

PTO/SB/66 (03-09)
Approved for use through 03/31/2012. OMB 0651-0016
U.S. Patent and Trademark Office: U.S. DEPARTMENT OF COMMERCE
Under the Paperwork Reduction Act of 1995, no persons are required to respond to a collection of information unless it displays valid OMB control number.

PETITION TO ACCEPT UNINTENTIONALLY DELAYED PAYMENT OF MAINTENANCE FEE IN AN EXPIRED PATENT (37 CFR 1.378(c))

Patent Number	Issue Date (YYYY-MM-DD)	Application Number	Filing Date (YYYY-MM-DD)	Docket Number (if applicable)
7,019,582	2006-03-28	10/711,624	2004-09-29	LKSP0113USA

CAUTION: Maintenance fee (and surcharge, if any) payment must correctly identify: (1) the patent number and (2) the application number of the actual U.S. application leading to issuance of that patent to ensure the fee(s) is/are associated with the correct patent. 37 CFR 1.366(c) and (d).

SMALL ENTITY
☐ Patentee claims, or has previously claimed, small entity status. See 37 CFR 1.27.

LOSS OF ENTITLEMENT TO SMALL ENTITY STATUS
☐ Patentee is no longer entitled to small entity status. See 37 CFR 1.27(g)

NOT Small Entity			Small Entity		
	Fee	Code		Fee	Code
◉	3 ½ year	(1551)	○	3 ½ year	(2551)
○	7 ½ year	(1552)	○	7 ½ year	(2552)
○	11 ½ year	(1553)	○	11 ½ year	(2553)

SURCHARGE
The surcharge required by 37 CFR 1.20(i)(2) (Fee Code 1558) must be paid as a condition of accepting unintentionally delayed payment of the maintenance fee.

MAINTENANCE FEE (37 CFR 1.20(e)-(g))
The appropriate maintenance fee must be submitted with this petition.

STATEMENT
THE UNDERSIGNED CERTIFIES THAT THE DELAY IN PAYMENT OF THE MAINTENANCE FEE TO THIS PATENT WAS UNINTENTIONAL

PETITIONER(S) REQUEST THAT THE DELAYED PAYMENT OF THE MAINTENANCE FEE BE ACCEPTED AND THE PATENT REINSTATED

THIS PORTION MUST BE COMPLETED BY THE SIGNATORY OR SIGNATORIES

37 CFR 1.378(d) states: "Any petition under this section must be signed by an attorney or agent registered to practice before the Patent and Trademark Office, or by the patentee, the assignee, or other party in interest."

I certify, in accordance with 37 CFR 1.4(d)(4) that I am

◉ An attorney or agent registered to practice before the Patent and Trademark Office

○ A sole patentee

○ A joint patentee; I certify that I am authorized to sign this submission on behalf of all the other patentees.

○ A joint patentee; all of whom are signing this e-petition

○ The assignee of record of the entire interest

Under the Paperwork Reduction Act of 1995, no persons are required to respond to a collection of information unless it displays valid OMB control number.

Patent Practitioner			
A signature of the applicant or representative is required in accordance with 37 CFR 1.33 and 10.18. Please see 37 CFR 1.4(d) for the form of the signature			
Signature	/Winston Hsu/	Date (YYYY-MM-DD)	2012-03-05
Name	Winston Hsu	Registration Number	41526

This collection of information is required by 37 CFR 1.378(c). The information is required to obtain or retain a benefit by the public which is to file (and by the USPTO to process) an application. Confidentiality is governed by 35 U.S.C. 122 and 37 CFR 1.11 and 1.14. This collection is estimated to take 1 hour to complete, including gathering, preparing, and submitting the completed application form to the USPTO. Time will vary depending upon the individual case. Any comments on the amount of time you require to complete this form and/ or suggestions for reducing this burden, should be sent to the Chief Information Officer, U.S. Patent and Trademark Office, U.S. Department of Commerce, P.O. Box 1450, Alexandria, VA 22313-1450. DO NOT SEND FEES OR COMPLETED FORMS TO THIS ADDRESS. **This form can only be used when in conjunction with EFS-Web. If this form is mailed to the USPTO, it may cause delays in reinstating the patent.**

Privacy Act Statement

The Privacy Act of 1974 (P.L. 93-579) requires that you be given certain information in connection with your submission of the attached form related to a patent application or patent. Accordingly, pursuant to the requirements of the Act, please be advised that: (1) the general authority for the collection of this information is 35 U.S.C. 2(b)(2); (2) furnishing of the information solicited is voluntary; and (3) the principal purpose for which the information is used by the U.S. Patent and Trademark Office is to process and/or examine your submission related to a patent application or patent. If you do not furnish the requested information, the U.S. Patent and Trademark Office may not be able to process and/or examine your submission, which may result in termination of proceedings or abandonment of the application or expiration of the patent.

The information provided by you in this form will be subject to the following routine uses:

1. The information on this form will be treated confidentially to the extent allowed under the Freedom of Information Act (5 U.S.C. 552) and the Privacy Act (5 U.S.C. 552a). Records from this system of records may be disclosed to the Department of Justice to determine whether the Freedom of Information Act requires disclosure of these records.

2. A record from this system of records may be disclosed, as a routine use, in the course of presenting evidence to a court, magistrate, or administrative tribunal, including disclosures to opposing counsel in the course of settlement negotiations.

3. A record in this system of records may be disclosed, as a routine use, to a Member of Congress submitting a request involving an individual, to whom the record pertains, when the individual has requested assistance from the Member with respect to the subject matter of the record.

4. A record in this system of records may be disclosed, as a routine use, to a contractor of the Agency having need for the information in order to perform a contract. Recipients of information shall be required to comply with the requirements of the Privacy Act of 1974, as amended, pursuant to 5 U.S.C. 552a(m).

5. A record related to an International Application filed under the Patent Cooperation Treaty in this system of records may be disclosed, as a routine use, to the International Bureau of the World Intellectual Property Organization, pursuant to the Patent Cooperation Treaty.

6. A record in this system of records may be disclosed, as a routine use, to another federal agency for purposes of National Security review (35 U.S.C. 181) and for review pursuant to the Atomic Energy Act (42 U.S.C. 218(c)).

7. A record from this system of records may be disclosed, as a routine use, to the Administrator, General Services, or his/her designee, during an inspection of records conducted by GSA as part of that agency's responsibility to recommend improvements in records management practices and programs, under authority of 44 U.S.C. 2904 and 2906. Such disclosure shall be made in accordance with the GSA regulations governing inspection of records for this purpose, and any other relevant (i.e., GSA or Commerce) directive. Such disclosure shall not be used to make determinations about individuals.

8. A record from this system of records may be disclosed, as a routine use, to the public after either publication of the application pursuant to 35 U.S.C. 122(b) or issuance of a patent pursuant to 35 U.S.C. 151. Further, a record may be disclosed, subject to the limitations of 37 CFR 1.14, as a routine use, to the public if the record was filed in an application which became abandoned or in which the proceedings were terminated and which application is referenced by either a published application, an application open to public inspections or an issued patent.

9. A record from this system of records may be disclosed, as a routine use, to a Federal, State, or local law enforcement agency, if the USPTO becomes aware of a violation or potential violation of law or regulation.

UNITED STATES PATENT AND TRADEMARK OFFICE

Commissioner for Patents
United States Patent and Trademark Office
P.O. Box 1450
Alexandria, VA 22313-1450
www.uspto.gov

FOLEY & LARDNER LLP
111 HUNTINGTON AVENUE
26TH FLOOR
BOSTON, MA 02199-7610

MAILED

AUG 31 2011

OFFICE OF PETITIONS

In re Application of	:	
Georgy Momchilov, et al.	:	
Application No. 10/711,699	:	DECISION ON PETITION
Filed: September 30, 2004	:	
Attorney Docket No. 099011-0315 (CTX-102US)	:	

This is a decision on the petition under 37 CFR 1.182, filed, January 12, 2010, to correct the name of inventor "Gueorgui Momtchilov" to – Georgy Momchilov --. The delay in responding is regretted; however, the petition was recently referred to the Office of Petitions for consideration.

The petition is **GRANTED**.

Office records have been corrected to reflect the correct spelling of the above-named inventor. A corrected Filing Receipt, which sets forth the correction of the above-named inventor, accompanies this decision on petition.

Any questions concerning this matter may be directed to the undersigned at (571) 272-3204.

The application is being referred to the Office of Data Management to await a response to the Notice of Allowance and Fee(s) Due mailed August 4, 2011.

/SDB/

Sherry D. Brinkley
Petitions Examiner
Office of Petitions

ATTACHMENT: Corrected Filing Receipt

UNITED STATES PATENT AND TRADEMARK OFFICE

UNITED STATES DEPARTMENT OF COMMERCE
United States Patent and Trademark Office
Address: COMMISSIONER FOR PATENTS
P.O. Box 1450
Alexandria, Virginia 22313-1450
www.uspto.gov

APPLICATION NUMBER	FILING or 371(c) DATE	GRP ART UNIT	FIL FEE REC'D	ATTY.DOCKET.NO	TOT CLAIMS	IND CLAIMS
10/711,699	09/30/2004	2453	1834	099011-0315 (CTX-102US)	48	8

CONFIRMATION NO. 5698

CORRECTED FILING RECEIPT

48329
FOLEY & LARDNER LLP
111 HUNTINGTON AVENUE
26TH FLOOR
BOSTON, MA 02199-7610

OC000000049283523

Date Mailed: 08/12/2011

Receipt is acknowledged of this non-provisional patent application. The application will be taken up for examination in due course. Applicant will be notified as to the results of the examination. Any correspondence concerning the application must include the following identification information: the U.S. APPLICATION NUMBER, FILING DATE, NAME OF APPLICANT, and TITLE OF INVENTION. Fees transmitted by check or draft are subject to collection. Please verify the accuracy of the data presented on this receipt. **If an error is noted on this Filing Receipt, please submit a written request for a Filing Receipt Correction. Please provide a copy of this Filing Receipt with the changes noted thereon. If you received a "Notice to File Missing Parts" for this application, please submit any corrections to this Filing Receipt with your reply to the Notice. When the USPTO processes the reply to the Notice, the USPTO will generate another Filing Receipt incorporating the requested corrections**

Applicant(s)

Georgy Momchilov, Coconut Creek, FL;
Ryan Best, Wellington, FL;
Simon Frost, Harpenden, UNITED KINGDOM;

Power of Attorney: The patent practitioners associated with Customer Number 48329

Domestic Priority data as claimed by applicant

Foreign Applications (You may be eligible to benefit from the **Patent Prosecution Highway** program at the USPTO. Please see http://www.uspto.gov for more information.)

If Required, Foreign Filing License Granted: 10/25/2004

The country code and number of your priority application, to be used for filing abroad under the Paris Convention, is **US 10/711,699**

Projected Publication Date: Not Applicable

Non-Publication Request: No

Early Publication Request: No

Title

SYSTEM AND METHOD FOR DATA SYNCHRONIZATION OVER A NETWORK USING A PRESENTATION LEVEL PROTOCOL

Preliminary Class

709

PROTECTING YOUR INVENTION OUTSIDE THE UNITED STATES

Since the rights granted by a U.S. patent extend only throughout the territory of the United States and have no effect in a foreign country, an inventor who wishes patent protection in another country must apply for a patent in a specific country or in regional patent offices. Applicants may wish to consider the filing of an international application under the Patent Cooperation Treaty (PCT). An international (PCT) application generally has the same effect as a regular national patent application in each PCT-member country. The PCT process **simplifies** the filing of patent applications on the same invention in member countries, but **does not result** in a grant of "an international patent" and does not eliminate the need of applicants to file additional documents and fees in countries where patent protection is desired.

Almost every country has its own patent law, and a person desiring a patent in a particular country must make an application for patent in that country in accordance with its particular laws. Since the laws of many countries differ in various respects from the patent law of the United States, applicants are advised to seek guidance from specific foreign countries to ensure that patent rights are not lost prematurely.

Applicants also are advised that in the case of inventions made in the United States, the Director of the USPTO must issue a license before applicants can apply for a patent in a foreign country. The filing of a U.S. patent application serves as a request for a foreign filing license. The application's filing receipt contains further information and guidance as to the status of applicant's license for foreign filing.

Applicants may wish to consult the USPTO booklet, "General Information Concerning Patents" (specifically, the section entitled "Treaties and Foreign Patents") for more information on timeframes and deadlines for filing foreign patent applications. The guide is available either by contacting the USPTO Contact Center at 800-786-9199, or it can be viewed on the USPTO website at http://www.uspto.gov/web/offices/pac/doc/general/index.html.

For information on preventing theft of your intellectual property (patents, trademarks and copyrights), you may wish to consult the U.S. Government website, http://www.stopfakes.gov. Part of a Department of Commerce initiative, this website includes self-help "toolkits" giving innovators guidance on how to protect intellectual property in specific countries such as China, Korea and Mexico. For questions regarding patent enforcement issues, applicants may call the U.S. Government hotline at 1-866-999-HALT (1-866-999-4158).

LICENSE FOR FOREIGN FILING UNDER

Title 35, United States Code, Section 184

Title 37, Code of Federal Regulations, 5.11 & 5.15

GRANTED

The applicant has been granted a license under 35 U.S.C. 184, if the phrase "IF REQUIRED, FOREIGN FILING LICENSE GRANTED" followed by a date appears on this form. Such licenses are issued in all applications where

the conditions for issuance of a license have been met, regardless of whether or not a license may be required as set forth in 37 CFR 5.15. The scope and limitations of this license are set forth in 37 CFR 5.15(a) unless an earlier license has been issued under 37 CFR 5.15(b). The license is subject to revocation upon written notification. The date indicated is the effective date of the license, unless an earlier license of similar scope has been granted under 37 CFR 5.13 or 5.14.

This license is to be retained by the licensee and may be used at any time on or after the effective date thereof unless it is revoked. This license is automatically transferred to any related applications(s) filed under 37 CFR 1.53(d). This license is not retroactive.

The grant of a license does not in any way lessen the responsibility of a licensee for the security of the subject matter as imposed by any Government contract or the provisions of existing laws relating to espionage and the national security or the export of technical data. Licensees should apprise themselves of current regulations especially with respect to certain countries, of other agencies, particularly the Office of Defense Trade Controls, Department of State (with respect to Arms, Munitions and Implements of War (22 CFR 121-128)); the Bureau of Industry and Security, Department of Commerce (15 CFR parts 730-774); the Office of Foreign AssetsControl, Department of Treasury (31 CFR Parts 500+) and the Department of Energy.

NOT GRANTED

No license under 35 U.S.C. 184 has been granted at this time, if the phrase "IF REQUIRED, FOREIGN FILING LICENSE GRANTED" DOES NOT appear on this form. Applicant may still petition for a license under 37 CFR 5.12, if a license is desired before the expiration of 6 months from the filing date of the application. If 6 months has lapsed from the filing date of this application and the licensee has not received any indication of a secrecy order under 35 U.S.C. 181, the licensee may foreign file the application pursuant to 37 CFR 5.15(b).

UNITED STATES PATENT AND TRADEMARK OFFICE

Commissioner for Patents
United States Patent and Trademark Office
P.O. Box 1450
Alexandria, VA 22313-1450
www.uspto.gov

CAREY, RODRIGUEZ, GREENBERG & O"KEEFE, LLP
STEVEN M. GREENBERG
950 PENINSULA CORPORATE CIRCLE
SUITE 2022
BOCA RATON FL 33487

MAILED
FEB 01 2012
OFFICE OF PETITIONS

In re Application of	:	
Ivan M. Heninger et al.	:	
Application No. 10/711,940	:	DECISION ON PETITION
Filed: October 14, 2004	:	
Attorney Docket No. RSW920040122US1	:	

This is a decision on the Petition to Expunge, filed December 27, 2011, which is being treated as a petition under 37 CFR 1.59(b) to expunge information from the above identified application.

The petition is **dismissed**.

Petitioner requests that the Request for Continued Examination (RCE), filed December 26, 2011, be expunged from the record. Petitioner requests that the RCE be expunged as it was filed unintentionally and that they intended to file a Request for Rehearing.

Petitioner characterizes the RCE as filed unintentionally. Expungement of papers filed unintentionally is discussed in MPEP 724.05(II). However, the RCE is clearly identified as being intended for the instant application and appears to be a response to the Board of Appeals Decision mailed October 26, 2011. As such the RCE was, at the time of filing, was intentionally filed and cannot be expunged under 37 CFR 1.59.

Telephone inquiries concerning this communication should be directed to Carl Friedman at (571) 272-6842.

Carl Friedman
Petitions Examiner
Office of Petitions

UNITED STATES PATENT AND TRADEMARK OFFICE

Commissioner for Patents
United States Patent and Trademark Office
P.O. Box 1450
Alexandria, VA 22313-1450
www.uspto.gov
DIW Nov-10

APEX JURIS, PLLC
12733 LAKE CITY WAY NORTHEAST
SEATTLE WA 98125

MAILED
NOV 22 2010
OFFICE OF PETITIONS

In re Application of	:	
Marty Williams	:	
Application Number: 10/711,961	:	ON PETITION
Filing Date: 10/15/2004	:	
Attorney Docket Number: 10.18.07.USP	:	

This is a decision on the petition filed on August 6, 2010, under 37 CFR 1.137(a),[1] to revive the above-identified application.

The petition is **dismissed**.

Any request for reconsideration of this decision must be submitted within **TWO (2) MONTHS** from the mail date of this decision. Extensions of time under 37 CFR 1.136(a) are permitted. The reconsideration request should include a cover letter entitled "Renewed Petition under 37 CFR 1.137(a)" or as discussed below "Renewed Petition under 37 CFR 1.137(b)."

The application became abandoned on January 17, 2009, for failure to timely submit a reply to the final Office action mailed on October 16, 2008, which set a three (3) month shortened statutory

[1] A grantable petition under 37 CFR 1.137(a) must be accompanied by:

(1) the required reply, unless previously filed; In a nonprovisional application abandoned for failure to prosecute, the required reply may be met by the filing of a continuing application. In a nonprovisional utility or plant application filed on or after June 8, 1995, and abandoned for failure to prosecute, the required reply may also be met by the filing of a request for continued examination in compliance with § 1.114. In an application or patent, abandoned or lapsed for failure to pay the issue fee or any portion thereof, the required reply must be the payment of the issue fee or any outstanding balance thereof. In an application, abandoned for failure to pay the publication fee, the required reply must include payment of the publication fee.

(2) the petition fee as set forth in 37 CFR 1.17(l);

(3) a showing to the satisfaction of the Director that the entire delay in filing the required reply from the due date for the reply until the filing of a grantable petition pursuant to 37 CFR 1.137(a) was unavoidable; and

(4) any terminal disclaimer (and fee as set forth in 37 CFR 1.20(d)) required pursuant to 37 CFR 1.137(c)).

period for reply. Notice of Abandonment was mailed on May 12, 2009.

On August 6, 2010, a petition under 37 CFR 1.137(b), petition fee under §1.17(m), and a Request for Continued Examination (RCE), RCE fee, an amendment as the submission under 1.114 were filed. Also on August 6, 2010, a petition under 37 CFR 1.137(a) was filed.

The petition under 37 CFR 1.137(a) states, in part:

> Applicant previously submitted a petition under unintentional and paid the revival fees of $810… After further consideration Applicant filed for revival under the unavoidable standard and filed that petition…
>
> Applicant respectfully requests a refund in the amount of $540, i.e., the difference between the $810 paid for unintentional and the $270 amount due for unavoidable petition.

MPEP 607.02 states, in pertinent part:

> Under 35 U.S.C. 42(d) and 37 CFR 1.26, the Office may refund: (1) a fee paid by mistake (e.g., fee paid when no fee is required); or (2) any fee paid in excess of the amount of fee that is required. See *Ex parte Grady*, 59 USPQ 276, 277 (Comm'r Pat. 1943) (the statutory authorization for the refund of fees under the "by mistake" clause is applicable only to a mistake relating to the fee payment). When an applicant or patentee takes an action "by mistake" (e.g., files an application or maintains a patent in force "by mistake"), the submission of fees required to take that action (e.g., a filing fee submitted with such application or a maintenance fee submitted for such patent) is not a "fee paid by mistake" within the meaning of 35 U.S.C. 42(d). 37 CFR 1.26(a) also provides that a change of purpose after the payment of a fee, as when a party desires to withdraw the filing of a patent application for which the fee was paid, will not entitle the party to a refund of such fee.

The showing of record is that petitioner filed the petition under 37 CFR 1.137(b), and paid the fee due therefor, then decided thereafter to file a petition under 37 CFR 1.137(a) instead. Such action constitutes a change of purpose under 37 CFR 1.26(a)

which does not entitle the party to a refund of such fee. Nevertheless, the petition under 37 CFR 1.137(b) will be held in abeyance, and applicant may pay the difference to request reconsideration under 37 CFR 1.137(b).

Petitioner Marty Williams asserts that prosecution of the application was unavoidably delayed due to the actions or inactions of petitioner's counsel, Glenn Webb (hereinafter "Webb"). Specifically, petitioner states that Webb neglected petitioner's intellectual properties and also recently informed petitioner that he (Webb) was diagnosed with clinical depression, "and that the onset of the disease matches with the accelerating neglect of [petitioner's] intellectual property portfolio."

Petitioner has also provided a statement by Webb, with regard to three issued patents U.S. Patent Nos. 6,042,175, 6,213,539, and 6,398,290, which had expired for non-payment of the maintenance fees. Webb states, in essence, that the maintenance fee in the '175 patent was not paid because petitioner had decided not to maintain that patent. Webb states that the maintenance fees in the patents were not paid in the '539 and '290 patents due to docketing difficulties due to Webb's moving to a new law firm. Webb further states that he became aware of the abandonment of the '539 and '290 patents on June 18, 2008, but that petitioner Williams never instructed Webb to proceed with reinstating the expired patents. Webb further states that petitioner Williams had "decided to discuss the issues with the licensor and would further instruct me at a later time."

The Director may revive an abandoned application if the delay in responding to the relevant outstanding Office requirement is shown to the satisfaction of the Director to be "unavoidable".[2] Decisions on reviving abandoned applications on the basis of "unavoidable" delay have adopted the reasonably prudent person standard in determining if the delay was unavoidable:

> The word 'unavoidable' . . . is applicable to ordinary human affairs, and requires no more or greater care or diligence than is generally used and observed by prudent and careful men in relation to their most important business. It permits them in the exercise of this care to rely upon the ordinary and trustworthy agencies of mail and telegraph, worthy and reliable employees, and such other means and instrumentalities as are usually employed in such important business. If

[2] 35 U.S.C. § 133.

> unexpectedly, or through the unforeseen fault or imperfection of these agencies and instrumentalities, there occurs a failure, it may properly be said to be unavoidable, all other conditions of promptness in its rectification being present.[3]

The showing of record is inadequate to establish unavoidable delay within the meaning of 35 U.S.C. § 133 and 37 CFR 1.137(a).[5] Specifically, an application is "unavoidably" abandoned only where petitioner, or counsel for petitioner, takes all action necessary for a proper response to the outstanding Office action, but through the intervention of unforeseen circumstances, such as failure of mail, telegraph, facsimile, or the negligence of otherwise reliable employees, the response is not timely received in the Office.[4]

There are three periods to be considered during the evaluation of a petition under 37 CFR 1.137(a):

(1) The delay in reply that originally resulted in expiration;
(2) The delay in filing an initial petition pursuant to § 1.137(a) to revive the application; and
(3) The delay in filing a *grantable* petition pursuant to § 1.137(a) to revive the application.[5]

This petition lacks the showing required by periods (1) and (2).

With regards to period (1), above, the statement of unavoidable delay attached to the petition requests reinstatement of expired patents, not the revival of an abandoned application. It appears that petitioner did not prepare a separate statement of unavoidable delay for the subject petition to revive. Further, the statement on Page 3 of the PTO/SB/61 form is not signed and

---

[3] In re Mattullath, 38 App. D.C. 497, 514-15 (1912)(quoting Ex parte Pratt, 1887 Dec. Comm'r Pat. 31, 32-33 (1887)); see also Winkler v. Ladd, 221 F. Supp. 550, 552, 138 USPQ 666, 167-68 (D.D.C. 1963), aff'd, 143 USPQ 172 (D.C. Cir. 1963); Ex parte Henrich, 1913 Dec. Comm'r Pat. 139, 141 (1913). In addition, decisions on revival are made on a "case-by-case basis, taking all the facts and circumstances into account." Smith v. Mossinghoff, 671 F.2d 533, 538, 213 USPQ 977, 982 (D.C. Cir. 1982). Finally, a petition cannot be granted where a petitioner has failed to meet his or her burden of establishing that the delay was "unavoidable." Haines v. Quigg, 673 F. Supp. 314, 316-17, 5 USPQ2d 1130, 1131-32 (N.D. Ind. 1987).

[4] Ex parte Pratt, 1887 Dec. Comm'r Pat. 31 (Comm'r Pat. 1887).

[5] See Changes to Patent Practice and Procedure; Final Rule Notice, 62 Fed. Reg. 53131 at 53158 (October 10, 1997).

does not contain an explanation of why the delay was unavoidable, but, rather, merely references documents related to the petitions under 37 CFR 1.378(b) to reinstate the expired patents.

Further, the statement from Webb pertains only to the expired patents, and does not address the abandonment of the subject application.

With regard to petitioner's apparent contention that his former counsel, Webb, failed to communicate with him and timely take action to in this case, petitioner should send a letter to Webb, informing him that the Office is investigating the cause of the delay in responding to the final Office action mailed on October 16, 2008, asking him to respond in writing within one (1) month of the receipt of said letter with an explanation as to why a response to the final Office action mailed on October 16, 2008, was not timely filed. A copy of this decision should be included. Any response received from Webb should be included with a renewed petition. If no response is received, petitioner should so state in any renewed petition.

In any event, while petitioner allegedly chose to rely upon attorney Webb, such reliance *per se* does not provide petitioner with a showing of unavoidable delay within the meaning of 37 CFR 1.137(a) and 35 USC 133.[6] Rather, such reliance merely shifts the focus of the inquiry from petitioner to whether Webb acted reasonably and prudently.[7] Nevertheless, petitioner is bound by any errors that may have been committed by Webb.[8]

The U.S. Patent and Trademark Office must rely on the actions or inactions of duly authorized and voluntarily chosen representatives of the applicant, and applicant is bound by the consequences of those actions or inactions.[9] Specifically, petitioner's delay caused by the mistakes or negligence of his or her voluntarily chosen representative does not constitute unavoidable delay within the meaning of 35 U.S.C. § 133.[10] Furthermore, the U.S. Patent and Trademark Office is not the

---

[6] See California Med. Prod. v. Technol Med. Prod., 921 F. Supp. 1219, 1259 (D. Del. 1995).

[7] Id.

[8] California, *supra*.

[9] Link v. Wabash, 370 U.S. 626, 633-34 (1962).

[10] Haines v. Quigg, 673 F. Supp. 314, 316-17, 5 USPQ2d 1130, 1131-32 (N. D. Ind. 1987); Smith v. Diamond, 209 USPQ 1091 (D.D.C. 1981); Potter v. Dann, 201 USPQ 574 (D.D.C. 1978); Ex parte Murray, 1891 Dec. Comm'r Pat. 130, 131 (Comm'r Pat. 1891).

proper forum for resolving disputes between applicants and their representatives.[11]

While physical or mental incapacitation can be a cause of delay, a showing of "unavoidable" delay based upon incapacitation must establish that the attorney's incapacitation was of such a nature and degree as to render the practitioner unable to conduct business (e.g. correspond with the Office) during the period between January 16, 2009, and August 6, 2010. Such a showing must be supported by a statement from the practitioner's treating physician, and such statement must provide the nature of petitioner's incapacitation during the above-mentioned period. Petitioner has not provided a statement from petitioner's treating physician providing the nature and degree of petitioner's incapacitation during the period from when the maintenance fee was due until the filing of the present petition

Simply put, petitioner has provided evidence to support neither his allegations that Webb neglected petitioner's application nor that Webb suffered mental incapacitation. Rather, the attached statement from Webb reflects that there is a dispute between petitioner and his former attorney, Webb. As stated, *supra*, the Office is not the proper forum for resolving disputes between applicants and their representatives.

With regard to period (2), above, it is noted that a revocation of power of attorney with a new power of attorney to Customer No. 35,870 the Customer Number associated with petitioner's current registered patent practitioner, was filed on May 19, 2010. The power of attorney was accepted on May 26, 2010. The subject petition was not filed until August 6, 2010, over two (2) months after the power of attorney was granted, and petitioner would presumably have discovered that the application was abandoned. Petitioner must explain, in any renewed petition, when he discovered that the subject application was abandoned, and show that any delay in filing the petition under 37 CFR 1.137(a) was unavoidable.

In summary, the showing of record suggests that the abandonment resulted from a dispute with petitioner's former counsel rather than as a result of unavoidable delay. As the showing presented is insufficient to establish unavoidable delay within the meaning of 35 U.S.C. § 133 and 37 CFR 1.137(a).

---

[11] See Ray v. Lehman, 55 F.3d 606, 34 USPQ2d 1786 (Fed. Cir. 1995).

As the showing of record is insufficient to satisfy the requirements of a grantable petition under 37 CFR 1.137(a), the petition will be dismissed.

ALTERNATIVE VENUE

As stated above, the petition under 37 CFR 1.137(b) is held in abeyance pending reconsideration of the petition under 37 CFR 1.137(a). Alternatively, petitioner may again file a petition under 37 CFR 1.137(b).

The filing of a petition under the unintentional standard cannot be intentionally delayed and therefore should be filed promptly. A person seeking revival due to unintentional delay cannot make a statement that the delay was unintentional unless the entire delay, including the delay from the date it was discovered that the application was abandoned until the filing of the petition to revive under 37 CFR 1.137(b), was unintentional. A statement that the delay was unintentional is not appropriate if petitioner intentionally delayed the filing of a petition for revival under 37 CFR 1.137(b).

Should petitioners decide to file a petition under 37 CFR 1.137(b), the additional petition fee due is currently $**540.00** ($810.00 - $270.00) for a small entity.[12]

Further correspondence with respect to this matter should be addressed as follows:

By mail: Mail Stop Petition
Commissioner for Patents
P.O. Box 1450
Alexandria, VA 22313-1450

By FAX: (571) 273-8300
Attn: Office of Petitions

By hand: Customer Service Window
Mail Stop Petition
Randolph Building
401 Dulany Street
Alexandria, VA 22314

---

[12] As Office fees are revised from time-to-time, petitioner is encouraged to check the USPTO website at www.uspto.gov for current fee amounts prior to submission of any petition. Alternatively, petitioner may contact the Office by phone at 1-800-PTO-9199 for fee information.

A reply may also be filed via the EFS-Web system of the USPTO.

Telephone inquiries concerning this matter may be directed to the undersigned at (571) 272-3231.

D Wood

Douglas I. Wood
Senior Petitions Attorney
Office of Petitions

UNITED STATES PATENT AND TRADEMARK OFFICE

Commissioner for Patents
United States Patent and Trademark Office
P.O. Box 1450
Alexandria, VA 22313-1450
www.uspto.gov
DIW Mar-11

APEX JURIS, PLLC
12733 LAKE CITY WAY NORTHEAST
SEATTLE WA 98125

MAILED

MAR 14 2011

OFFICE OF PETITIONS

ON PETITION

In re Application of :
Marty Williams :
Application Number: 10/711,961 :
Filing Date: 10/15/2004 :
Attorney Docket Number: :
10.18.07.USP :

This is a decision in response to the petition under 37 CFR 1.137(b) filed on January 24, 2011, to revive the above-identified application.

The petition is **GRANTED**.

The above-identified application became abandoned on January 17, 2009, for failure to timely submit a reply to the final Office action mailed on October 16, 2008, which set a three (3)-month shortened statutory period for reply. Notice of Abandonment was mailed on May 12, 2009. The petition under 37 CFR 1.137(a) filed on August 6, 2010 was dismissed on November 22, 2010. The subject petition under 37 CFR 1.137(b) was filed on January 24, 2010.[1]

Receipt of the Request for Continued Examination (RCE) and submission under 37 CFR 1.114, filed on August 6, 2010 is acknowledged.

The application is being forwarded to Technology Center Art Unit 3781 for further processing.

[1] On August 6, 2010, petitions under 37 CFR 1.137(a) and (b) were submitted, along with a request to revive the application as "unavoidably abandoned." The subject petition form under 37 CFR 1.137(b), filed on January 24, 2001, is not signed, although the letter entitled as a renewed petition is properly signed. The petition form under 37 CFR 1.137(b), filed on August 6, 2010, contains the statement required by 37 CFR 1.137(b)(3).

Telephone inquiries concerning this matter may be directed to the undersigned at (571) 272-3231.

Douglas I. Wood
Senior Petitions Attorney
Office of Petitions

SPE RESPONSE FOR CERTIFICATE OF CORRECTION

DATE : September 2, 2011

TO SPE OF : ART UNIT 3739

SUBJECT : Request for Certificate of Correction for Appl. No.: 10/712007 Patent No.: 7282061

CofC mailroom date: 8-15-11

Please respond to this request for a certificate of correction within 7 days.

FOR IFW FILES:

Please review the requested changes/corrections as shown in the **COCIN** document(s) in the IFW application image. No new matter should be introduced, nor should the scope or meaning of the claims be changed.

Please complete the response (see below) and forward the completed response to scanning using document code **COCX**.

FOR PAPER FILES:

Please review the requested changes/corrections as shown in the attached certificate of correction. Please complete this form (see below) and forward it with the file to:

Certificates of Correction Branch (CofC)
Randolph Square – 9D10-A
Palm Location 7580

Note: _____

_____

Magdalene Talley
Certificates of Correction Branch

571-272-0423 _____

Thank You For Your Assistance

The request for issuing the above-identified correction(s) is hereby:
Note your decision on the appropriate box.

- ☑ **Approved** — All changes apply.
- ☐ **Approved in Part** — Specify below which changes **do not** apply.
- ☐ **Denied** — State the reasons for denial below.

Comments: _____

_____

_____

_____

_____

_____ **SPE**

3739 **Art Unit**

SPE RESPONSE FOR CERTIFICATE OF CORRECTION

DATE : September 2, 2011

TO SPE OF : ART UNIT 3739

SUBJECT : Request for Certificate of Correction for Appl. No.: 10/712007 Patent No.: 7282061

CofC mailroom date: 8-15-11

Please respond to this request for a certificate of correction within 7 days.

FOR IFW FILES:

Please review the requested changes/corrections as shown in the **COCIN** document(s) in the IFW application image. No new matter should be introduced, nor should the scope or meaning of the claims be changed.

Please complete the response (see below) and forward the completed response to scanning using document code **COCX**.

FOR PAPER FILES:

Please review the requested changes/corrections as shown in the attached certificate of correction. Please complete this form (see below) and forward it with the file to:

Certificates of Correction Branch (CofC)
Randolph Square – 9D10-A
Palm Location 7580

Note: _____

_____

Magdalene Talley
Certificates of Correction Branch
571-272-0423 _____

Thank You For Your Assistance

The request for issuing the above-identified correction(s) is hereby:
Note your decision on the appropriate box.

- ☑ **Approved** — All changes apply.
- ☐ **Approved in Part** — Specify below which changes **do not** apply.
- ☐ **Denied** — State the reasons for denial below.

Comments: _____

_____

_____

_____

_____

_____ **SPE**

3739 **Art Unit**

UNITED STATES PATENT AND TRADEMARK OFFICE

Commissioner for Patents
United States Patent and Trademark Office
P.O. Box 1450
Alexandria, VA 22313-1450
www.uspto.gov

Rutan & Tucker, LLP.
611 ANTON BLVD
SUITE 1400
COSTA MESA, CA 92626

MAILED

MAR 14 2012

OFFICE OF PETITIONS

In re Application of	:	
Nicholas James Witchey	:	
Application No. 10/712,084	:	DECISION ON PETITION
Filed: November 13, 2003	:	TO WITHDRAW FROM
Attorney Docket No. 021404.0012US1	:	RECORD

This is a decision on the Request to Withdraw as attorney or agent of record under 37 CFR §§ 1.36(b) or 10.40 filed February 10, 2012.

The request is **NOT APPROVED**.

Practitioners have not certified that they have (1) given reasonable notice to the client, prior to the expiration of the reply period, that the practitioner(s) intends to withdraw from employment; (2) delivered to the client or duly authorized representative of the client papers and property (including funds) to which the client is entitled; and (3) notified the client of any responses that may be due and the time frame within which the client must respond. The failure to do so may subject the practitioner to discipline[1]. *See USPTO Form No. PTO/SB/83.*

Petitioner should note USPTO Form Number PTO/SB/83 requires practitioner to "check each box below that is factually correct" and Warns that "If a box is left unchecked, the request will likely not be approved". (*See USPTO Form No. PTO/SB/83*).

Additionally, the request cannot be approved because Hani Z. Sayed and the attorneys/agents associated with Customer Number 34284 have not provided a correspondence address for the intervening assignee[2] or first named inventor. Therefore, all future communications from the Office will continue to be directed to the above-listed address until otherwise notified by applicant.

---

[1] Practitioner should note that false certification may violate a practitioners' duty under 37 CFR 10.23(b)(4) and (b)(5).

[2] In order to request or take action in a patent matter, the assignee must establish its ownership of the patent to the satisfaction of the Director. In this regard, a Statement under 37 CFR 3.73(b) must have either: (i) documentary evidence of a chain of title from the original owner to the assignee (*e.g.*, copy of an executed assignment), and a statement affirming that the documentary evidence of the chain of title from the original owner to the assignee was or concurrently is being submitted for recordation pursuant to § 3.11; or (ii) a statement specifying where documentary evidence of a chain of title from the original owner to the assignee is recorded in the assignment records of the Office (*e.g.*, reel and frame number). *See* USPTO Form No. PTO/SB/96.

Further, petitioner should note that the Office will no longer change the correspondence address to that of a new practitioner unless the Request is accompanied by a power of attorney to a new practitioner (*See* USPTO Form PTO/SB/82).

There is an outstanding Office action mailed January 4, 2012, that requires a reply from the applicant.

All future communications from the Office will continue to be directed to the above-listed address until otherwise notified by applicant.

Telephone inquiries concerning this decision should be directed to the undersigned at (571) 272-3226.

/Andrea Smith/
Andrea Smith
Petitions Examiner
Office of Petitions

UNITED STATES PATENT AND TRADEMARK OFFICE

Commissioner for Patents
United States Patent and Trademark Office
P.O. Box 1450
Alexandria, VA 22313-1450
www.uspto.gov

LANDMARK INTELLECTUAL PROPERTY LAW, PLLC
P.O. BOX 1266
MIDLOTHIAN, VA 23113

MAILED
DEC 22 2010
OFFICE OF PETITIONS

In re Patent No. 7,168,615	::	DECISION DISMISSING PETITIONS
Issue Date: January 30, 2007	:	UNDER 37 CFR 1.78(a)(3) AND (a)(6)
Application No. 10/712,182	:	AND REQUEST FOR CERTIFICATE
Filed: November 13, 2003	:	OF CORRECTIONS
Attorney Docket No. 62941.002018	:	

This is a decision on the petition under 37 CFR §§ 1.78(a)(3) and 1.78(a)(6), filed October 6, 2010, to accept an unintentionally delayed claim under 35 U.S.C. §§ 120 and 119(e) for the benefit of priority to the prior-filed nonprovisional and provisional applications set forth in the concurrently filed amendment by way of a certificate of correction.

The petition is **DISMISSED**

A petition for acceptance of a claim for late priority under 37 CFR §§ 1.78(a)(3) and 1.78(a)(6) is only applicable to those applications filed on or after November 29, 2000 and after the expiration of the period specified in 37 CFR §§ 1.78(a)(2)(ii) and 1.78(a)(5)(ii). In addition, the petition under 37 CFR §§ 1.78(a)(3) and 1.78(a)(6) must be accompanied by:

(1) the reference required by 35 U.S.C. §§ 120 and 119(e) and 37 CFR §§ 1.78(a)(2)(i) and 1.78(a)(5)(i) of the prior-filed application, unless previously submitted;
(2) the surcharge set forth in § 1.17(t); and
(3) a statement that the entire delay between the date the claim was due under 37 CFR §§ 1.78(a)(2)(ii) and 1.78(a)(5)(ii) and the date the claim was filed was unintentional. The Director may require additional where there is a question whether the delay was unintentional.

The Certificate of Correction should contain an amendment to the first sentence of the specification setting forth the benefit claim. See MPEP 201.11(III).

Further correspondence with respect to this matter should be addressed as follows:

By mail: Mail Stop PETITIONS
Commissioner for Patents
Post Office Box 1450
Alexandria, VA 22313-1450

By hand: Customer Service Window
Mail Stop Petitions
Randolph Building
40l Dulany Street
Alexandria, VA 22314

By fax: (571) 273-8300
ATTN: Office of Petitions

Any questions concerning this matter may be directed to April M. Wise at (571) 272-1642. All other inquiries concerning this application should be directed to the Office of Certificate of Corrections at their hotline 571-272-4200.

/dab/
David Bucci
Petitions Examiner
Office of Petitions

UNITED STATES PATENT AND TRADEMARK OFFICE

Commissioner for Patents
United States Patent and Trademark Office
P.O. Box 1450
Alexandria, VA 22313-1450
www.uspto.gov

ANDREWS KURTH LLP
1350 I STREET, N.W.
SUITE 1100
WASHINGTO, DC 20005

MAILED

SEP 22 2010

OFFICE OF PETITIONS

In re Application of
James W. Lillard, Jr., et al.
Application No. 10/712,393
Filed: November 14, 2003
Attorney Docket No.: 1013-014 US

ON PETITION

This is a decision in response to the renewed petition, filed July 29, 2010, to revive the above-identified application under the provisions of 37 CFR 1.137(b).

The petition is **GRANTED**.

The above-identified application became abandoned for failure to reply in a timely manner to the Restriction Requirement mailed July 26, 2005. A Notice of Abandonment was subsequently mailed on November 17, 2006. On May 10, 2010, a petition under the provisions of 37 CFR 1.137(b) was filed; however, the petition was dismissed in a decision mailed June 30, 2010. On July 29, 2010, the present petition was filed.

While this application has been abandoned for an extended period of time, the U.S. Patent and Trademark Office is relying on petitioner's duty of candor and good faith and accepting the statement that "the entire delay in filing the required reply from the due date for the reply until the filing of a grantable petition pursuant to 37 CFR 1.137(b) was unintentional." *See* Changes to Patent Practice and Procedure, 62 Fed. Reg., at 53160 and 53178; 1203 Off. Gaz. Pat. Office, at 88 and 103 (responses to comments 64 and 109) (applicant obligated under 37 CFR 10.18 to inquire into the underlying facts and circumstances when providing the statement required by 37 CFR 1.137(b) to the U.S. Patent and Trademark Office).

The petition satisfies the requirements of 37 CFR 1.137(b) in that petitioner has supplied (1) the response in the form of an amendment and election of the invention to be examined; (2) the petition fee of $810; and (3) an adequate statement of unintentional delay.

The application is being referred to Technology Center AU 1647 for appropriate action by the Examiner in the normal course of business on the reply received May 10, 2010.

Telephone inquiries concerning this decision may be directed to the undersigned at (571) 272-3204. All other inquiries regarding this application should be directed to the Technology Center.

Sherry D. Brinkley
Petitions Examiner
Office of Petitions

SPE RESPONSE FOR CERTIFICATE OF CORRECTION

Paper No.: ____

DATE : 1/5/2011

TO SPE OF : ART UNIT 2451

SUBJECT : Request for Certificate of Correction for Appl. No.: 10/712396 Patent No.: 7844731 B1

CofC mailroom date: 12/22/2010

Please respond to this request for a certificate of correction within 7 days.

FOR IFW FILES:

Please review the requested changes/corrections as shown in the **COCIN** document(s) in the IFW application image. No new matter should be introduced, nor should the scope or meaning of the claims be changed.

Please complete the response (see below) and forward the completed response to scanning using document code **COCX**.

FOR PAPER FILES:

Please review the requested changes/corrections as shown in the attached certificate of correction. Please complete this form (see below) and forward it with the file to:

Certificates of Correction Branch (CofC)
Randolph Square – 9D10-A
Palm Location 7580

Virginia Tolbert
Certificates of Correction Branch
571-272-0460

Thank You For Your Assistance

The request for issuing the above-identified correction(s) is hereby:
Note your decision on the appropriate box.

- [x] **Approved** — **All** changes apply.
- [ ] **Approved in Part** — Specify below which changes **do not** apply.
- [ ] **Denied** — State the reasons for denial below.

Comments: _____

JOHN FOLLANSBEE
SUPERVISORY PATENT EXAMINER
TECHNOLOGY CENTER 2100

SPE

2451
Art Unit

UNITED STATES PATENT AND TRADEMARK OFFICE

Commissioner for Patents
United States Patent and Trademark Office
P.O. Box 1450
Alexandria, VA 22313-1450
www.uspto.gov

LOUIS J. WILLE
BRISTOL-MYERS SQUIBB COMPANY
PATENT DEPARTMENT
P O BOX 4000
PRINCETON NJ 08543-4000

MAILED
SEP 13 2010
OFFICE OF PETITIONS

In re Patent No. 7,632,858	: DECISION ON REQUEST
Issued: December 15, 2009	: FOR RECONSIDERATION
Application No. 10/712,456	: OF PATENT TERM ADJUSTMENT
Filed: November 13, 2003	: AND
Attorney Docket No3800024.00560	: NOTICE OF INTENT TO ISSUE
/4207	: CERTIFICATE OF CORRECTION

This is a decision on the "LETTER REGARDING PATENT TERM ADJUSTMENT AT ISSUANCE PURSUANT TO COMMENT 43 OF THE FINAL RULE" filed February 8, 2010, requesting that the patent term adjustment determination for the above-identified patent be recalculated.

The petition to correct the patent term adjustment indicated on the above-identified patent to indicate that the term of the above-identified patent, is adjusted by one thousand two hundred fourteen (1214) days and is **GRANTED to the extent indicated herein**.

It is undisputed that the period of examination delay, "A" delay", pursuant to 37 CFR 1.702(a)(1) and (a)(2) is 258 and 26 days. The "B" delay period, the over three year period begins on November 13, 2006 and ends on December 15, 2009, considering the 26 days of overlap for the period December 29, 2007 to January 24, 2008 is 1128 days. Additionally, for the filing of a Notice of Appeal on December 11, 2008, the 30 days of the over three year period consumed by appellate review, beginning on December 10, 2008 and ending on January 9, 2009, are not included in the B delay. *See* 35 U.S.C. § 154(b)(1)(B)(ii).

A review of the record reveals additional bases for entry of periods of reduction for applicant delay. Specifically, 37 CFR 1.704(c) provides, in pertinent part, that:

> Circumstances that constitute a failure of the applicant to engage in reasonable efforts to conclude processing or examination of an application also include the following circumstances, which will result in the following reduction of the period of adjustment set forth in § 1.703 to the extent that the periods are not overlapping:

> (10) Submission of an amendment under § 1.312 or other paper after a notice of allowance has been given or mailed, in which case the period of adjustment set forth in § 1.703 shall be reduced by the lesser of
>
> (i) The number of days, if any, beginning on the date the amendment under § 1.312 or other paper was filed and ending on the mailing date of the Office action or notice in response to the amendment under § 1.312 or such other paper; or
>
> (ii) Four months; ...

In this instance, after the mailing of a Notice of Allowance on July 7, 2009, on October 7, 2009, applicants filed an amendment under 1.312. On October 23, 2009, the examiner mailed a response to the amendment. Accordingly, pursuant to 37 CFR 1.704(c)(10), a period of reduction for applicant delay of 17 days, counting the number of days beginning on October 6, 2009 and ending October 23, 2009, should have been entered.

As such, the patent term adjustment is 1214 days (284 "A delay" days plus 1128 "B delay" days minus 26 overlap days minus 30 appellate review days minus 142 days applicant delay), not 753 days.

The Office acknowledges the authorization to charge the $200.00 fee set forth in 37 CFR 1.18(e) to deposit account no. 02-1818.

The Office will *sua sponte* issue a certificate of correction. Pursuant to 37 CFR 1.322, the Office will not issue a certificate of correction without first providing assignee or patentee an opportunity to be heard. Accordingly, patentees are given **one (1) month or thirty (30) days**, whichever is longer, from the mail date of this decision to respond. No extensions of time will be granted under § 1.136.

The application is being forwarded to the Certificates of Branch for issuance of a certificate of correction. The Office will issue a certificate of correction indicating that the term of the above-identified patent is extended or adjusted by **one thousand two hundred fourteen (1214)** days.

Telephone inquiries specific to this decision should be directed to the undersigned Petitions Attorney at (571) 272-3212.

Patricia Faison-Ball

Patricia Faison-Ball
Senior Petitions Attorney
Office of Petitions

Enclosure: Copy of DRAFT Certificate of Correction

DRAFT

UNITED STATES PATENT AND TRADEMARK OFFICE

CERTIFICATE OF CORRECTION

PATENT : 7,632,858 B2

DATED : December 15, 2009

INVENTOR(S) : Lawrence G. Hamann

It is certified that error appears in the above-identified patent and that said Letters Patent is hereby corrected as shown below:

On the cover page,

[*] Notice: Subject to any disclaimer, the term of this patent is extended or adjusted under 35 USC 154(b) by (753) days

Delete the phrase "by 753 days" and insert -- by 1214 days--

UNITED STATES PATENT AND TRADEMARK OFFICE

Commissioner for Patents
United States Patent and Trademark Office
P.O. Box 1450
Alexandria, VA 22313-1450
www.uspto.gov

MAILED

NOV 19 2010

OFFICE OF PETITIONS

DUANE MORRIS LLP - PRINCETON
PO BOX 5203
PRINCETON, NJ 08543-5203

In re Application of	:	
Mark D. Monica	:	DECISION ON PETITION
Application No. 10/712,825	:	TO WITHDRAW
Filed: November 13, 2003	:	FROM RECORD
Attorney Docket No. IPE-1	:	

This is a decision on the Request to Withdraw as attorney or agent of record under 37 C.F.R. § 1.36(b), filed October 28, 2010.

The request is **APPROVED**.

A grantable request to withdraw as attorney/agent of record must be signed by every attorney/agent seeking to withdraw or contain a clear indication that one attorney is signing on behalf of another/others. The Office will require the practitioner(s) to certify that he, she or they have: (1) given reasonable notice to the client, prior to the expiration of the reply period, which the practitioner(s) intends to withdraw from employment; (2) delivered to the client or a duly authorized representative of the client all papers and property (including funds) to which the client is entitled; and (3) notified the client of any replies that may be due and the time frame within which the client must respond, pursuant to 37 CFR 10.40 (c).

The request was signed by Paul A. Schwarz, on behalf of the practitioners of record associated with Customer No. 28581.

Customer No. 28581 has been withdrawn as from record. Applicant is reminded that there is no attorney of record at this time.

The correspondence address of record has been changed and the new correspondence address is the address indicated below.

There are no outstanding Office actions that require a reply from the applicant.

Telephone inquires concerning this decision should be directed to the undersigned at (571) 272-6059. All other inquires concerning either the examination or status of the application should be directed to the Technology Center.

Alicia Kelley
Petitions Examiner
Office of Petitions

cc: MARK D. MONICA
333 ROUTE 46 WEST, SUITE 101
MOUNTAIN LAKES, NJ 07046

UNITED STATES PATENT AND TRADEMARK OFFICE

UNITED STATES DEPARTMENT OF COMMERCE
United States Patent and Trademark Office
Address: COMMISSIONER FOR PATENTS
P.O. Box 1450
Alexandria, Virginia 22313-1450
www.uspto.gov

APPLICATION NUMBER	FILING OR 371(C) DATE	FIRST NAMED APPLICANT	ATTY. DOCKET NO./TITLE
10/712,825	11/13/2003	Mark D. Monica	IPE-1

CONFIRMATION NO. 8830

POWER OF ATTORNEY NOTICE

28581
DUANE MORRIS LLP - Princeton
PO BOX 5203
PRINCETON, NJ 08543-5203

OC000000044583714

Date Mailed: 11/19/2010

NOTICE REGARDING CHANGE OF POWER OF ATTORNEY

This is in response to the Power of Attorney filed 10/28/2010.

- The withdrawal as attorney in this application has been accepted. Future correspondence will be mailed to the new address of record. 37 CFR 1.33.

/atkelley/

Office of Data Management, Application Assistance Unit (571) 272-4000, or (571) 272-4200, or 1-888-786-0101

UNITED STATES PATENT AND TRADEMARK OFFICE

Commissioner for Patents
United States Patent and Trademark Office
P.O. Box 1450
Alexandria, VA 22313-1450
www.uspto.gov

LEMPIA SUMMERFIELD KATZ LLC/CME
ONE NORTH LASALLE STREET
SUITE 2900
CHICAGO IL 60602

MAILED
SEP 09 2011
OFFICE OF PETITIONS

In re Application of	:
Farrell et al.	:
Application No. 10/713,126	: DECISION GRANTING PETITION
Filed: November 14, 2003	: UNDER 37 CFR 1.78(a)(6)
Attorney Docket No. 4672/310	:

This is a decision on the petition under 37 CFR 1.78(a)(6), filed August 31, 2011, to accept an unintentionally delayed claim under 35 U.S.C. § 119(e) for the benefit of prior-filed provisional Application No. 60/490,145, filed July 25, 2003, as set forth in the concurrently filed amendment.

The petition is **GRANTED**.

A petition under 37 CFR 1.78(a)(6) is only applicable to those applications filed on or after November 29, 2000. Further, the petition is appropriate only after expiration of the period specified in 37 CFR 1.78(a)(5)(ii) and must be filed during the pendency of the nonprovisional application. In addition, the petition must be accompanied by:

(1) the reference required by 35 U.S.C. § 119(e) and 37 CFR 1.78(a)(5)(i) to the prior-filed application, unless previously submitted;
(2) the surcharge set forth in § 1.17(t); and
(3) a statement that the entire delay between the date the claim was due under 37 CFR 1.78(a)(5)(ii) and the date the claim was filed was unintentional. The Commissioner may require additional information where there is a question whether the delay was unintentional.

The instant nonprovisional application was filed after November 29, 2000, and the claim herein for the benefit of priority to the prior-filed provisional application is submitted after expiration of the period specified by 37 CFR 1.78(a)(5)(ii). Therefore, this is a proper petition under 37 CFR 1.78(a)(6).

The instant nonprovisional application was pending at the time of filing of the reference to the prior-filed provisional application as required by 37 1.78(a)(5)(iii). Additionally, the instant nonprovisional application was filed within twelve months of the filing date of the prior-filed provisional application, Application No. 60/490,145, which was filed on July 25, 2003, for which priority is claimed.

The petition complies with the requirements for a grantable petition under 37 CFR 1.78(a)(6) in that (1) a reference to the above-noted, prior-filed provisional application has been included in an amendment to the first sentence of the specification following the title, as provided by 37 CFR

1.78(a)(5)(iii); (2) the surcharge fee required by 37 CFR 1.17(t) has been submitted; and (3) the petition contains a proper statement of unintentional delay. Accordingly, having found that the instant petition for acceptance of an unintentionally delayed claim for the benefit of priority under 35 U.S.C. § 119(e) to the above-noted, prior-filed provisional application satisfies the conditions of 37 CFR 1.78(a)(6), the petition is granted.

The granting of the petition to accept the delayed benefit claim to the prior-filed application under 37 CFR 1.78(a)(6) should not be construed as meaning that the instant application is entitled to the benefit of the filing date of the prior-filed application. In order for the instant application to be entitled to the benefit of the prior-filed application, all other requirements under 35 U.S.C. §119(e) and 37 CFR 1.78(a)(4) and (a)(5) must be met. Similarly, the fact that the corrected Filing Receipt accompanying this decision on petition includes the prior-filed application should not be construed as meaning that applicant is entitled to the claim for benefit of priority to the prior-filed application noted thereon. Accordingly, the examiner will, in due course, consider this benefit claim and determine whether the instant application is entitled to the benefit of the earlier filing date.

A corrected Filing Receipt, which includes the priority claim to the prior-filed provisional application, accompanies this decision on petition.

Any inquiries concerning this decision may be directed to the undersigned at (571) 272-3206. Any other inquiries concerning either the examination procedures or status of the application should be directed to the Technology Center.

This matter is being referred to Technology Center AU 3695 for appropriate action on the amendment submitted August 31, 2011, including consideration by the examiner of the claim under 35 U.S.C. §119(e) for the benefit of priority to prior-filed provisional Application No. 60/490,145.

/Liana Walsh/
Liana Walsh
Petitions Examiner
Office of Petitions

UNITED STATES PATENT AND TRADEMARK OFFICE

UNITED STATES DEPARTMENT OF COMMERCE
United States Patent and Trademark Office
Address: COMMISSIONER FOR PATENTS
PO Box 1450
Alexandria, Virginia 22313-1450
www.uspto.gov

APPLICATION NUMBER	FILING or 371(c) DATE	GRP ART UNIT	FIL FEE REC'D	ATTY.DOCKET.NO	TOT CLAIMS	IND CLAIMS
10/713,126	11/14/2003	3695	1086	4672/310	28	5

CONFIRMATION NO. 9585

CORRECTED FILING RECEIPT

12684
Lempia Summerfield Katz LLC/CME
One North LaSalle Street
Suite 2900
Chicago, IL 60602

OC000000049720605

Date Mailed: 09/08/2011

Receipt is acknowledged of this non-provisional patent application. The application will be taken up for examination in due course. Applicant will be notified as to the results of the examination. Any correspondence concerning the application must include the following identification information: the U.S. APPLICATION NUMBER, FILING DATE, NAME OF APPLICANT, and TITLE OF INVENTION. Fees transmitted by check or draft are subject to collection. Please verify the accuracy of the data presented on this receipt. **If an error is noted on this Filing Receipt, please submit a written request for a Filing Receipt Correction. Please provide a copy of this Filing Receipt with the changes noted thereon. If you received a "Notice to File Missing Parts" for this application, please submit any corrections to this Filing Receipt with your reply to the Notice. When the USPTO processes the reply to the Notice, the USPTO will generate another Filing Receipt incorporating the requested corrections**

Applicant(s)

James Farrell, Carol Stream, IL;
James Krause, Palatine, IL;
Mazen Chadid, Chicago, IL;

Assignment For Published Patent Application

Chicago Mercantile Exchange, Inc.

Power of Attorney: The patent practitioners associated with Customer Number 12684

Domestic Priority data as claimed by applicant

This appln claims benefit of 60/490,145 07/25/2003

Foreign Applications (You may be eligible to benefit from the **Patent Prosecution Highway** program at the USPTO. Please see http://www.uspto.gov for more information.)

If Required, Foreign Filing License Granted: 02/24/2004

The country code and number of your priority application, to be used for filing abroad under the Paris Convention, is **US 10/713,126**

Projected Publication Date: Not Applicable

Non-Publication Request: No

Early Publication Request: No

Title

System and method for controlling markets during a stop loss trigger

Preliminary Class

705

PROTECTING YOUR INVENTION OUTSIDE THE UNITED STATES

Since the rights granted by a U.S. patent extend only throughout the territory of the United States and have no effect in a foreign country, an inventor who wishes patent protection in another country must apply for a patent in a specific country or in regional patent offices. Applicants may wish to consider the filing of an international application under the Patent Cooperation Treaty (PCT). An international (PCT) application generally has the same effect as a regular national patent application in each PCT-member country. The PCT process **simplifies** the filing of patent applications on the same invention in member countries, but **does not result** in a grant of "an international patent" and does not eliminate the need of applicants to file additional documents and fees in countries where patent protection is desired.

Almost every country has its own patent law, and a person desiring a patent in a particular country must make an application for patent in that country in accordance with its particular laws. Since the laws of many countries differ in various respects from the patent law of the United States, applicants are advised to seek guidance from specific foreign countries to ensure that patent rights are not lost prematurely.

Applicants also are advised that in the case of inventions made in the United States, the Director of the USPTO must issue a license before applicants can apply for a patent in a foreign country. The filing of a U.S. patent application serves as a request for a foreign filing license. The application's filing receipt contains further information and guidance as to the status of applicant's license for foreign filing.

Applicants may wish to consult the USPTO booklet, "General Information Concerning Patents" (specifically, the section entitled "Treaties and Foreign Patents") for more information on timeframes and deadlines for filing foreign patent applications. The guide is available either by contacting the USPTO Contact Center at 800-786-9199, or it can be viewed on the USPTO website at http://www.uspto.gov/web/offices/pac/doc/general/index.html.

For information on preventing theft of your intellectual property (patents, trademarks and copyrights), you may wish to consult the U.S. Government website, http://www.stopfakes.gov. Part of a Department of Commerce initiative, this website includes self-help "toolkits" giving innovators guidance on how to protect intellectual property in specific countries such as China, Korea and Mexico. For questions regarding patent enforcement issues, applicants may call the U.S. Government hotline at 1-866-999-HALT (1-866-999-4158).

LICENSE FOR FOREIGN FILING UNDER

Title 35, United States Code, Section 184

Title 37, Code of Federal Regulations, 5.11 & 5.15

GRANTED

The applicant has been granted a license under 35 U.S.C. 184, if the phrase "IF REQUIRED, FOREIGN FILING LICENSE GRANTED" followed by a date appears on this form. Such licenses are issued in all applications where the conditions for issuance of a license have been met, regardless of whether or not a license may be required as

set forth in 37 CFR 5.15. The scope and limitations of this license are set forth in 37 CFR 5.15(a) unless an earlier license has been issued under 37 CFR 5.15(b). The license is subject to revocation upon written notification. The date indicated is the effective date of the license, unless an earlier license of similar scope has been granted under 37 CFR 5.13 or 5.14.

This license is to be retained by the licensee and may be used at any time on or after the effective date thereof unless it is revoked. This license is automatically transferred to any related applications(s) filed under 37 CFR 1.53(d). This license is not retroactive.

The grant of a license does not in any way lessen the responsibility of a licensee for the security of the subject matter as imposed by any Government contract or the provisions of existing laws relating to espionage and the national security or the export of technical data. Licensees should apprise themselves of current regulations especially with respect to certain countries, of other agencies, particularly the Office of Defense Trade Controls, Department of State (with respect to Arms, Munitions and Implements of War (22 CFR 121-128)); the Bureau of Industry and Security, Department of Commerce (15 CFR parts 730-774); the Office of Foreign AssetsControl, Department of Treasury (31 CFR Parts 500+) and the Department of Energy.

NOT GRANTED

No license under 35 U.S.C. 184 has been granted at this time, if the phrase "IF REQUIRED, FOREIGN FILING LICENSE GRANTED" DOES NOT appear on this form. Applicant may still petition for a license under 37 CFR 5.12, if a license is desired before the expiration of 6 months from the filing date of the application. If 6 months has lapsed from the filing date of this application and the licensee has not received any indication of a secrecy order under 35 U.S.C. 181, the licensee may foreign file the application pursuant to 37 CFR 5.15(b).

PTO/SB/66 (03-09)
Approved for use through 03/31/2012. OMB 0651-0016
U.S. Patent and Trademark Office: U.S. DEPARTMENT OF COMMERCE
Under the Paperwork Reduction Act of 1995, no persons are required to respond to a collection of information unless it displays valid OMB control number.

PETITION TO ACCEPT UNINTENTIONALLY DELAYED PAYMENT OF MAINTENANCE FEE IN AN EXPIRED PATENT (37 CFR 1.378(c))

Patent Number	Issue Date (YYYY-MM-DD)	Application Number	Filing Date (YYYY-MM-DD)	Docket Number (if applicable)
7011535	2006-03-14	10713375	2003-11-14	182-538

CAUTION: Maintenance fee (and surcharge, if any) payment must correctly identify: (1) the patent number and (2) the application number of the actual U.S. application leading to issuance of that patent to ensure the fee(s) is/are associated with the correct patent. 37 CFR 1.366(c) and (d).

SMALL ENTITY
☒ Patentee claims, or has previously claimed, small entity status. See 37 CFR 1.27.

LOSS OF ENTITLEMENT TO SMALL ENTITY STATUS
☐ Patentee is no longer entitled to small entity status. See 37 CFR 1.27(g)

NOT Small Entity		Small Entity	
Fee	Code	Fee	Code
○ 3 ½ year	(1551)	◉ 3 ½ year	(2551)
○ 7 ½ year	(1552)	○ 7 ½ year	(2552)
○ 11 ½ year	(1553)	○ 11 ½ year	(2553)

SURCHARGE
The surcharge required by 37 CFR 1.20(i)(2) (Fee Code 1558) must be paid as a condition of accepting unintentionally delayed payment of the maintenance fee.

MAINTENANCE FEE (37 CFR 1.20(e)-(g))
The appropriate maintenance fee must be submitted with this petition.

STATEMENT
THE UNDERSIGNED CERTIFIES THAT THE DELAY IN PAYMENT OF THE MAINTENANCE FEE TO THIS PATENT WAS UNINTENTIONAL

PETITIONER(S) REQUEST THAT THE DELAYED PAYMENT OF THE MAINTENANCE FEE BE ACCEPTED AND THE PATENT REINSTATED

THIS PORTION MUST BE COMPLETED BY THE SIGNATORY OR SIGNATORIES

37 CFR 1.378(d) states: "Any petition under this section must be signed by an attorney or agent registered to practice before the Patent and Trademark Office, or by the patentee, the assignee, or other party in interest."

I certify, in accordance with 37 CFR 1.4(d)(4) that I am

◉ An attorney or agent registered to practice before the Patent and Trademark Office

○ A sole patentee

○ A joint patentee; I certify that I am authorized to sign this submission on behalf of all the other patentees.

○ A joint patentee; all of whom are signing this e-petition

○ The assignee of record of the entire interest

Under the Paperwork Reduction Act of 1995, no persons are required to respond to a collection of information unless it displays valid OMB control number.

Patent Practitioner			
A signature of the applicant or representative is required in accordance with 37 CFR 1.33 and 10.18. Please see 37 CFR 1.4(d) for the form of the signature			
Signature	/Kathleen A. Costigan/	Date (YYYY-MM-DD)	2010-08-30
Name	Kathleen A. Costigan	Registration Number	56006

This collection of information is required by 37 CFR 1.378(c). The information is required to obtain or retain a benefit by the public which is to file (and by the USPTO to process) an application. Confidentiality is governed by 35 U.S.C. 122 and 37 CFR 1.11 and 1.14. This collection is estimated to take 1 hour to complete, including gathering, preparing, and submitting the completed application form to the USPTO. Time will vary depending upon the individual case. Any comments on the amount of time you require to complete this form and/ or suggestions for reducing this burden, should be sent to the Chief Information Officer, U.S. Patent and Trademark Office, U.S. Department of Commerce, P.O. Box 1450, Alexandria, VA 22313-1450. DO NOT SEND FEES OR COMPLETED FORMS TO THIS ADDRESS. **This form can only be used when in conjunction with EFS-Web. If this form is mailed to the USPTO, it may cause delays in reinstating the patent.**

Privacy Act Statement

The Privacy Act of 1974 (P.L. 93-579) requires that you be given certain information in connection with your submission of the attached form related to a patent application or patent. Accordingly, pursuant to the requirements of the Act, please be advised that: (1) the general authority for the collection of this information is 35 U.S.C. 2(b)(2); (2) furnishing of the information solicited is voluntary; and (3) the principal purpose for which the information is used by the U.S. Patent and Trademark Office is to process and/or examine your submission related to a patent application or patent. If you do not furnish the requested information, the U.S. Patent and Trademark Office may not be able to process and/or examine your submission, which may result in termination of proceedings or abandonment of the application or expiration of the patent.

The information provided by you in this form will be subject to the following routine uses:

1. The information on this form will be treated confidentially to the extent allowed under the Freedom of Information Act (5 U.S.C. 552) and the Privacy Act (5 U.S.C. 552a). Records from this system of records may be disclosed to the Department of Justice to determine whether the Freedom of Information Act requires disclosure of these records.

2. A record from this system of records may be disclosed, as a routine use, in the course of presenting evidence to a court, magistrate, or administrative tribunal, including disclosures to opposing counsel in the course of settlement negotiations.

3. A record in this system of records may be disclosed, as a routine use, to a Member of Congress submitting a request involving an individual, to whom the record pertains, when the individual has requested assistance from the Member with respect to the subject matter of the record.

4. A record in this system of records may be disclosed, as a routine use, to a contractor of the Agency having need for the information in order to perform a contract. Recipients of information shall be required to comply with the requirements of the Privacy Act of 1974, as amended, pursuant to 5 U.S.C. 552a(m).

5. A record related to an International Application filed under the Patent Cooperation Treaty in this system of records may be disclosed, as a routine use, to the International Bureau of the World Intellectual Property Organization, pursuant to the Patent Cooperation Treaty.

6. A record in this system of records may be disclosed, as a routine use, to another federal agency for purposes of National Security review (35 U.S.C. 181) and for review pursuant to the Atomic Energy Act (42 U.S.C. 218(c)).

7. A record from this system of records may be disclosed, as a routine use, to the Administrator, General Services, or his/her designee, during an inspection of records conducted by GSA as part of that agency's responsibility to recommend improvements in records management practices and programs, under authority of 44 U.S.C. 2904 and 2906. Such disclosure shall be made in accordance with the GSA regulations governing inspection of records for this purpose, and any other relevant (i.e., GSA or Commerce) directive. Such disclosure shall not be used to make determinations about individuals.

8. A record from this system of records may be disclosed, as a routine use, to the public after either publication of the application pursuant to 35 U.S.C. 122(b) or issuance of a patent pursuant to 35 U.S.C. 151. Further, a record may be disclosed, subject to the limitations of 37 CFR 1.14, as a routine use, to the public if the record was filed in an application which became abandoned or in which the proceedings were terminated and which application is referenced by either a published application, an application open to public inspections or an issued patent.

9. A record from this system of records may be disclosed, as a routine use, to a Federal, State, or local law enforcement agency, if the USPTO becomes aware of a violation or potential violation of law or regulation.

UNITED STATES PATENT AND TRADEMARK OFFICE

Commissioner for Patents
United States Patent and Trademark Office
P.O. Box 1450
Alexandria, VA 22313-1450
www.uspto.gov

In re Patent No. 7011535
Issue Date: March 14,2006
Application No. 10713375
Filed: November 14,2003
Attorney Docket No. 2188002US1AP

:
:DECISION GRANTING PETITION
:UNDER 37 CFR 1.378(c)
:

This is a decision on the electronic petition, filed August 30,2010 ,under 37 CFR 1.378(c) to accept the unintentionally delayed payment of the 3.5 year maintenance fee for the above-identified patent.

The petition is **GRANTED**.

The maintenance fee is accepted, and the above-identified patent reinstated as of August 30,2010 . This decision also constitutes notice that the fee has been accepted. An electronic copy of the petition and this decision has been created as an entry in the Image File Wrapper. Nevertheless, petitioner should print and retain an independent copy.

Telephone inquiries related to this electronic decision should be directed to the Electronic Business Center at 1-866-217-9197.

UNITED STATES PATENT AND TRADEMARK OFFICE

Commissioner for Patents
United States Patent and Trademark Office
P.O. Box 1450
Alexandria, VA 22313-1450
www.uspto.gov

MCANDREWS HELD & MALLOY, LTD
500 WEST MADISON STREET
SUITE 3400
CHICAGO IL 60661

MAILED

SEP 30 2010

OFFICE OF PETITIONS

In re Application of :
Sherman (Xuemin) Chen et al. :
Application No. 10/713,415 : RESPONSE
Filed: November 14, 2003 :
Attorney Docket No. 15225US01 :

This is a response to the petition filed March 15, 2010, seeking to expunge "a Notice of Appeal and Pre-Appeal Brief Request for Review" from the file record of the instant application.

Petitioner requests that the Notice of Appeal and Pre-Appeal Brief Request for Review be expunged from the file record of the instant application, as " [the instant] application has been issued as US Patent 7,502,475, and the lack of intent is therefore evident by virtue of there being no final rejection in that application to which an appeal could be taken."

As an initial matter, it is noted that the papers being sought to be expunged were submitted in the instant application via the Office's Electronic Filing System, ***after*** the instant application issued as US Patent 7,502,475. Also, as stated in the petition, "the Notice of Appeal and Pre-Appeal Brief Request for Review contained identifying information that could only pertain to the application intended."

In view of the above, the documents requested to be expunged have been "closed" in the Image File Wrapper of the instant application, thereby preventing access thereto by the public.

Telephone inquiries concerning this communication should be directed to the undersigned at (571) 272 4914.

Ramesh Krishnamurthy

Ramesh Krishnamurthy
Petitions Examiner
Office of Petitions

SPE RESPONSE FOR CERTIFICATE OF CORRECTION

DATE : Oct. 30, 2009

TO SPE OF : ART UNIT 1648

SUBJECT : Request for Certificate of Correction for Appl. No.: 10/713732 Patent No.: 7588768

Please respond to this request for a certificate of correction within 7 days.

FOR IFW FILES:

Please review the requested changes/corrections as shown in the **COCIN** document(s) in the IFW application image. No new matter should be introduced, nor should the scope or meaning of the claims be changed.

Please complete the response (see below) and forward the completed response to scanning using document code **COCX**.

FOR PAPER FILES:

Please review the requested changes/corrections as shown in the attached certificate of correction. Please complete this form (see below) and forward it with the file to:

Certificates of Correction Branch (CofC)
Randolph Square – 9D10-A
Palm Location 7580

Magdalene Talley

Certificates of Correction Branch

571-272-0423

Thank You For Your Assistance

The request for issuing the above-identified correction(s) is hereby:
Note your decision on the appropriate box.

- ☒ **Approved** — **All** changes apply.
- ☐ **Approved in Part** — Specify below which changes **do not** apply.
- ☐ **Denied** — State the reasons for denial below.

Comments:

/Zachariah Lucas/ 1648

UNITED STATES PATENT AND TRADEMARK OFFICE

Commissioner for Patents
United States Patent and Trademark Office
P.O. Box 1450
Alexandria, VA 22313-1450
www.uspto.gov

Stevens Law Group
1754 Technology Drive
Suite #226
San Jose CA 95110

MAILED
FEB 21 2012
OFFICE OF PETITIONS

In re Application of

Hofland, et al.

Application No. 10/713,787

Filed: November 13, 2003

Attorney Docket No. **LPPO.00301**

DECISION ON PETITION

This is a decision on the petition under 37 CFR 1.137(a) filed February 2, 2012. The petition is also being treated as a petition under 37 CFR 1.181 to withdraw the holding of abandonment.

The petition under 37 CFR 1.137(a) is **dismissed a moot**.

The petition under 37 CFR 1.181(a) to withdraw the holding of abandonment is **granted**.

This application was held abandoned on August 31, 2008, after it was believed that a timely appeal brief or other proper paper was not filed after the filing of the Notice of Appeal on June 30, 2008.

Petitioner states that a Notice of Appeal responsive to the final Office action mailed December 28, 2007, was filed on June 30, 2008, with a request for an extension of time within the third month. Petitioner notes that June 28, 2008, was a Saturday. Accordingly, the Notice of Appeal, as filed on Monday, June 30, 2008, was timely. Further, petitioner states that a Request for Continued Examination under 37 CFR 1.114 was filed January 30, 2009, with a request for an extension of time within the fifth month.

A review of the application file history reveals that the Notice of Appeal and request for an extension of time within the third month was timely received within the extendable statutory period for reply set by the final Office action mailed December 28, 2007. Further, pursuant to 37 CFR 1.136(a)(1), the time period for filing an Appeal Brief or Request for Continued Examination after the filing of a Notice of Appeal is extendable five additional months as the time period for filing said paper is not set by statute and does not fall under of the exceptions provided in 37 CFR 1.136(a)(1). Based on the aforementioned, it appears that the application was improperly held abandoned as the Notice of Appeal was received prior to expiration of the maximum statutory period for reply to the final Office action and the Request for Continued Examination was timely filed after the filing of the Notice of Appeal. The holding of abandonment is withdrawn, accordingly.

In re Application No. 10/713,787

As the holding of abandonment is being withdrawn pursuant to 37 CFR 1.181, there is no relief that can be provided under 37 CFR 1.137(a). The petition under 37 CFR 1.137(a) is dismissed as moot, accordingly. The petition fee of $310.00 will be refunded, in due course.

Further inquires regarding this decision may be directed to the undersigned at (571) 272-3222.

The application file is being forwarded Technology Center 1600, GAU 1612 for further processing.

/Kenya A. McLaughlin/

Kenya A. McLaughlin
Petitions Attorney
Office of Petitions