UNITED STATES PATENT AND TRADEMARK OFFICE

Commissioner for Patents
United States Patent and Trademark Office
P.O. Box 1450
Alexandria, VA 22313-1450
www.uspto.gov

FINNEGAN, HENDERSON, FARABOW,
GARRETT & DUNNER, LLP
901 NEW YORK AVENUE, NW
WASHINGTON DC 20001-4413

MAILED

JAN 13 2011

OFFICE OF PETITIONS

In re Application of	:	
Yoshiaki Iwai	:	
Application No. 11/240,555	:	DECISION GRANTING PETITION
Filed: October 3, 2005	:	UNDER 37 CFR 1.313(c)(2)
Attorney Docket No. 09812.0092-00000	:	

This is a decision on the petition under 37 CFR 1.313(c)(2), filed January 13, 2011, to withdraw the above-identified application from issue after payment of the issue fee.

The petition is **GRANTED**.

The above-identified application is withdrawn from issue for consideration of a submission under 37 CFR 1.114 (request for continued examination). *See* 37 CFR 1.313(c)(2).

Petitioner is advised that the issue fee paid on December 22, 2010 cannot be refunded. If, however, this application is again allowed, petitioner may request that it be applied towards the issue fee required by the new Notice of Allowance.[1]

Telephone inquiries regarding this decision should be directed to undersigned at (571) 272-1642. All other inquiries concerning the examination or status of this application should be directed to the Technology Center.

This application is being referred to Technology Center AU 2624 for processing of the request for continued examination under 37 CFR 1.114 and for consideration of the concurrently filed information disclosure statement.

/AMW/
April M. Wise
Petitions Examiner
Office of Petitions

---

[1] *The request to apply the issue fee to the new Notice may be satisfied by completing and returning the new Part B – Fee(s) Transmittal Form (along with any balance due at the time of submission). Petitioner is advised that the Issue Fee Transmittal Form* ***must*** *be completed and timely submitted to avoid abandonment of the application.*

SPE RESPONSE FOR CERTIFICATE OF CORRECTION

Paper No.: _____

DATE : Aug 29, 2011

TO SPE OF : ART UNIT 3621 - SPE

SUBJECT : Request for Certificate of Correction for Appl. No.: 11/240,569 Patent No.: 7,664,708

Please respond to this request for a certificate of correction within 7 days.

FOR IFW FILES:

Please review the requested changes/corrections as shown in the **COCIN** document(s) in the IFW application image. No new matter should be introduced, nor should the scope or meaning of the claims be changed.

Please complete the response (see below) and forward the completed response to scanning using document code **COCX**.

FOR PAPER FILES:

Please review the requested changes/corrections as shown in the attached certificate of correction. Please complete this form (see below) and forward it with the file to:

Certificates of Correction Branch (CofC)
Randolph Square Building
2800 South Randolph Street
Arlington, VA 22206

Antonio Johnson

Should the changes [redacted] be approved?
See COCIN dated 07-26-11

Certificates of Correction Branch
(571)272-0483

Thank You For Your Assistance

The request for issuing the above-identified correction(s) is hereby:
Note your decision on the appropriate box.

- ☑ **Approved** — **All** changes apply.
- ☐ **Approved in Part** — Specify below which changes **do not** apply.
- ☐ **Denied** — State the reasons for denial below.

Comments: _____

/Andrew J. Fischer/ — SPE
3621 — Art Unit

UNITED STATES PATENT AND TRADEMARK OFFICE

Commissioner for Patents
United States Patent and Trademark Office
P.O. Box 1450
Alexandria, VA 22313-1450
www.uspto.gov

RAMIREZ & SMITH
P.O. BOX 34179
AUSTIN, TX 78734

MAILED
NOV 15 2011
OFFICE OF PETITIONS

In re Application of :
Janet Blumenfeld et al :
Application No. 11/240,610 :
Filed: September 29, 2005 :
Attorney Docket No. GE.0066 :

ON PETITION

This is a decision on the petition under the unintentional provisions of 37 CFR 1.137(b), filed October 31, 2011, to revive the above-identified application.

The petition is **GRANTED.**

The application became abandoned for failure to timely file a reply within the meaning of 37 CFR 1.113 to the final Office action of December 9, 2010. The proposed reply required for consideration of a petition to revive must be a Notice of Appeal (and appeal fee required by 37 CFR 41.20(b)(2), an amendment that prima facie places the application in condition for allowance, a Request for Continued Examination and submission (37 CFR 1.114), or the filing of a continuing application under 37 CFR 1.53(b). See MPEP 711.03(c)(III)(A)(2). No extension of time pursuant to the provisions of 37 CFR 1.136(a) was obtained. Accordingly, the date of abandonment of this application is March 10, 2011.

The petition satisfies the requirements of 37 CFR 1.137(b) in that petitioner has supplied (1) the reply in the form of a Request for Continued Examination (RCE) and fee of $930 and the submission required by 37 CFR 1.114; (2) the petition fee of $1860; and (3) a proper statement of unintentional delay.

Telephone inquiries concerning this decision should be directed to the undersigned at (571) 272-3210.

This application is being referred to Technology Center AU 3768 for processing of the RCE and for appropriate action by the Examiner in the normal course of business on the amendment submitted in accordance with 37 CFR 1.114.

Irvin Dingle
Petition Examiner
Office of Petitions

SPE RESPONSE FOR CERTIFICATE OF CORRECTION

Paper No.: _____

DATE : 08/30/11

TO SPE OF : ART UNIT 2881

SUBJECT : Request for Certificate of Correction for Appl. No 11/240,642 7804064

Please respond to this request for a certificate of correction within 7 days.

FOR IFW FILES:

Please review the requested changes/corrections as shown in the **COCIN** document(s) in the IFW application image. No new matter should be introduced, nor should the scope or meaning of the claims be changed.

Please complete the response (see below) and forward the completed response to scanning using document code **COCX**.

FOR PAPER FILES:

Please review the requested changes/corrections as shown in the attached certificate of correction. Please complete this form (see below) and forward it with the file to:

Certificates of Correction Branch (CofC)

Should the change(s) Be made?

RoChaun Hardwick
Certificates of Correction Branch
571 272-0470

Thank You For Your Assistance

The request for issuing the above-identified correction(s) is hereby:
Note your decision on the appropriate box.

X	**Approved**	**All** changes apply.
☐	**Approved in Part**	Specify below which changes **do not** apply.
☐	**Denied**	State the reasons for denial below.

Comments: Ok to enter the amendment.

/Robert Kim
SPE

2881
Art Unit

UNITED STATES PATENT AND TRADEMARK OFFICE

Commissioner for Patents
United States Patent and Trademark Office
P.O. Box 1450
Alexandria, VA 22313-1450
www.uspto.gov

MAILED
SEP 19 2011
OFFICE OF PETITIONS

STETINA BRUNDA GARRED & BRUCKER
75 ENTERPRISE, SUITE 250
ALISO VIEJO CA 92656

In re Patent No. 7,563,367	:	
Issue Date: July 21, 2009	:	
Application No. 11/240,695	:	NOTICE
Filed: September 30, 2005	:	
Attorney Docket No. MAJOR-111A	:	

This is a notice regarding your request for acceptance of a fee deficiency submission under 37 CFR 1.28. On September 1, 1998, the Court of Appeals for the Federal Circuit held that 37 CFR 1.28(c) is the sole provision governing the time for correction of the erroneous payment of the issue fee as a small entity. **See DH Technology v. Synergystex International, Inc. 154 F.3d 1333, 47 USPQ2d 1865 (Fed. Cir. Sept. 1, 1998).**

The Office no longer investigates or rejects original or reissue applications under 37 CFR 1.56. **1098 Off. Gaz. Pat. Office 502 (January 3, 1989)**. Therefore, nothing in this Notice is intended to imply that an investigation was done.

Your fee deficiency submission under 37 CFR 1.28 is hereby **ACCEPTED**.

This application is no longer entitled to small entity status. Accordingly, all future fees paid in this application must be paid at the large entity rate.

Inquiries related to this communication should be directed to Diane Goodwyn at (571) 272-6735.

Thurman K. Page
Petitions Examiner
Office of Petitions

UNITED STATES PATENT AND TRADEMARK OFFICE

Commissioner for Patents
United States Patent and Trademark Office
P.O. Box 1450
Alexandria, VA 22313-1450
www.uspto.gov

LAURENTIU JIANU
927 ONDERDONK AV.
RIDGEWOOD NY 11385

MAILED

AUG 16 2010

OFFICE OF PETITIONS

In re Application of
Laurentiu Jianu
Application No. 11/240,913
Filed: September 2005
Attorney Docket No.

DECISION ON PETITION

This is a decision on the renewed petition under the unintentional provisions of 37 CFR 1.137(b), filed July 15, 2010, to revive the above-identified application.

The petition is **GRANTED**.

The application became abandoned for failure to reply in a timely manner to the Notice of Non-Compliant Amendment mailed, October 23, 2007, which set a shortened statutory period for reply of one (1) month. The reply filed November 21, 2007, was deemed to be Non-compliant for reasons stated in the letter mailed January 16, 2008. A supplemental response was filed on January 25, 2008, with a certificate of mailing dated January 23, 2008, along with a request for two (2) months extension of time under the provisions of 37 CFR 1.136(a). However, that reply was not accepted because the payment of $215 included therewith was insufficient to cover the requested two (2) months extension of time. Accordingly, the application became abandoned on November 24, 2007.

The petition satisfies the requirements of 37 CFR 1.137(b) in that petitioner has supplied (1) the reply in the form of an amendment, (2) the petition fee of $810, and (3) a proper statement of unintentional delay. Accordingly, the reply to the Notice of Non-Compliant Amendment of October 23, 2007 is accepted as having been unintentionally delayed.

Petitioner should note that the Terminal Disclaimer filed July 20, 2009, has been placed in the file. It has not been treated on the merits as it is unnecessary.

Telephone inquiries concerning this decision should be directed to Tredelle Jackson at (571) 272-2783.

This application is being referred to Technology Center AU 3644 for appropriate action on the concurrently filed amendment.

Ramesh Krishnamurthy
Petitions Examiner
Office of Petitions

PTO/SB/66 (03-09)
Approved for use through 03/31/2012. OMB 0651-0016
U.S. Patent and Trademark Office: U.S. DEPARTMENT OF COMMERCE
Under the Paperwork Reduction Act of 1995, no persons are required to respond to a collection of information unless it displays valid OMB control number.

PETITION TO ACCEPT UNINTENTIONALLY DELAYED PAYMENT OF MAINTENANCE FEE IN AN EXPIRED PATENT (37 CFR 1.378(c))

Patent Number	Issue Date (YYYY-MM-DD)	Application Number	Filing Date (YYYY-MM-DD)	Docket Number (if applicable)
7263170	2007-08-28	11240919	2005-09-30	10338-6

CAUTION: Maintenance fee (and surcharge, if any) payment must correctly identify: (1) the patent number and (2) the application number of the actual U.S. application leading to issuance of that patent to ensure the fee(s) is/are associated with the correct patent. 37 CFR 1.366(c) and (d).

SMALL ENTITY
☒ Patentee claims, or has previously claimed, small entity status. See 37 CFR 1.27.

LOSS OF ENTITLEMENT TO SMALL ENTITY STATUS
☐ Patentee is no longer entitled to small entity status. See 37 CFR 1.27(g)

NOT Small Entity		Small Entity	
Fee	Code	Fee	Code
○ 3 ½ year	(1551)	● 3 ½ year	(2551)
○ 7 ½ year	(1552)	○ 7 ½ year	(2552)
○ 11 ½ year	(1553)	○ 11 ½ year	(2553)

SURCHARGE
The surcharge required by 37 CFR 1.20(i)(2) (Fee Code 1558) must be paid as a condition of accepting unintentionally delayed payment of the maintenance fee.

MAINTENANCE FEE (37 CFR 1.20(e)-(g))
The appropriate maintenance fee must be submitted with this petition.

STATEMENT
THE UNDERSIGNED CERTIFIES THAT THE DELAY IN PAYMENT OF THE MAINTENANCE FEE TO THIS PATENT WAS UNINTENTIONAL

PETITIONER(S) REQUEST THAT THE DELAYED PAYMENT OF THE MAINTENANCE FEE BE ACCEPTED AND THE PATENT REINSTATED

THIS PORTION MUST BE COMPLETED BY THE SIGNATORY OR SIGNATORIES

37 CFR 1.378(d) states: "Any petition under this section must be signed by an attorney or agent registered to practice before the Patent and Trademark Office, or by the patentee, the assignee, or other party in interest."

I certify, in accordance with 37 CFR 1.4(d)(4) that I am

○ An attorney or agent registered to practice before the Patent and Trademark Office

○ A sole patentee

○ A joint patentee; I certify that I am authorized to sign this submission on behalf of all the other patentees.

○ A joint patentee; all of whom are signing this e-petition

● The assignee of record of the entire interest

Under the Paperwork Reduction Act of 1995, no persons are required to respond to a collection of information unless it displays valid OMB control number.

The Assignee of record of the entire interest			
Under 37 CFR 3.71 an assignee becomes of record by filing a statement in compliance with 37 CFR 3.73(b). Signature requirements are set forth in 37 CFR 1.4(d), and the undersigned certifies that he / she is empowered to act on behalf of the assignee of the entire interest			
Signature	/Kal Fishman/	Date (YYYY-MM-DD)	2011-11-22
Name	Kal Fishman, COO of owner, Sensus Healthcare, LLC		
Enter Reel and Frame Number		Remove	
Reel Number	024611	Frame Number	0857
Click ADD for additional Reel Number and Frame Number		Add	

This collection of information is required by 37 CFR 1.378(c). The information is required to obtain or retain a benefit by the public which is to file (and by the USPTO to process) an application. Confidentiality is governed by 35 U.S.C. 122 and 37 CFR 1.11 and 1.14. This collection is estimated to take 1 hour to complete, including gathering, preparing, and submitting the completed application form to the USPTO. Time will vary depending upon the individual case. Any comments on the amount of time you require to complete this form and/ or suggestions for reducing this burden, should be sent to the Chief Information Officer, U.S. Patent and Trademark Office, U.S. Department of Commerce, P.O. Box 1450, Alexandria, VA 22313-1450. DO NOT SEND FEES OR COMPLETED FORMS TO THIS ADDRESS. **This form can only be used when in conjunction with EFS-Web. If this form is mailed to the USPTO, it may cause delays in reinstating the patent.**

Privacy Act Statement

The Privacy Act of 1974 (P.L. 93-579) requires that you be given certain information in connection with your submission of the attached form related to a patent application or patent. Accordingly, pursuant to the requirements of the Act, please be advised that: (1) the general authority for the collection of this information is 35 U.S.C. 2(b)(2); (2) furnishing of the information solicited is voluntary; and (3) the principal purpose for which the information is used by the U.S. Patent and Trademark Office is to process and/or examine your submission related to a patent application or patent. If you do not furnish the requested information, the U.S. Patent and Trademark Office may not be able to process and/or examine your submission, which may result in termination of proceedings or abandonment of the application or expiration of the patent.

The information provided by you in this form will be subject to the following routine uses:

1. The information on this form will be treated confidentially to the extent allowed under the Freedom of Information Act (5 U.S.C. 552) and the Privacy Act (5 U.S.C. 552a). Records from this system of records may be disclosed to the Department of Justice to determine whether the Freedom of Information Act requires disclosure of these records.

2. A record from this system of records may be disclosed, as a routine use, in the course of presenting evidence to a court, magistrate, or administrative tribunal, including disclosures to opposing counsel in the course of settlement negotiations.

3. A record in this system of records may be disclosed, as a routine use, to a Member of Congress submitting a request involving an individual, to whom the record pertains, when the individual has requested assistance from the Member with respect to the subject matter of the record.

4. A record in this system of records may be disclosed, as a routine use, to a contractor of the Agency having need for the information in order to perform a contract. Recipients of information shall be required to comply with the requirements of the Privacy Act of 1974, as amended, pursuant to 5 U.S.C. 552a(m).

5. A record related to an International Application filed under the Patent Cooperation Treaty in this system of records may be disclosed, as a routine use, to the International Bureau of the World Intellectual Property Organization, pursuant to the Patent Cooperation Treaty.

6. A record in this system of records may be disclosed, as a routine use, to another federal agency for purposes of National Security review (35 U.S.C. 181) and for review pursuant to the Atomic Energy Act (42 U.S.C. 218(c)).

7. A record from this system of records may be disclosed, as a routine use, to the Administrator, General Services, or his/her designee, during an inspection of records conducted by GSA as part of that agency's responsibility to recommend improvements in records management practices and programs, under authority of 44 U.S.C. 2904 and 2906. Such disclosure shall be made in accordance with the GSA regulations governing inspection of records for this purpose, and any other relevant (i.e., GSA or Commerce) directive. Such disclosure shall not be used to make determinations about individuals.

8. A record from this system of records may be disclosed, as a routine use, to the public after either publication of the application pursuant to 35 U.S.C. 122(b) or issuance of a patent pursuant to 35 U.S.C. 151. Further, a record may be disclosed, subject to the limitations of 37 CFR 1.14, as a routine use, to the public if the record was filed in an application which became abandoned or in which the proceedings were terminated and which application is referenced by either a published application, an application open to public inspections or an issued patent.

9. A record from this system of records may be disclosed, as a routine use, to a Federal, State, or local law enforcement agency, if the USPTO becomes aware of a violation or potential violation of law or regulation.

UNITED STATES PATENT AND TRADEMARK OFFICE

Commissioner for Patents
United States Patent and Trademark Office
P.O. Box 1450
Alexandria, VA 22313-1450
www.uspto.gov

In re Patent No. 7263170
Issue Date: August 28,2007
Application No. 11240919
Filed: September 30,2005
Attorney Docket No. 759-039.002-1

:
:DECISION GRANTING PETITION
:UNDER 37 CFR 1.378(c)
:

This is a decision on the electronic petition, filed November 22,2011 ,under 37 CFR 1.378(c) to accept the unintentionally delayed payment of the 3.5 year maintenance fee for the above-identified patent.

The petition is **GRANTED**.

The maintenance fee is accepted, and the above-identified patent reinstated as of November 22,2011 . This decision also constitutes notice that the fee has been accepted. An electronic copy of the petition and this decision has been created as an entry in the Image File Wrapper. Nevertheless, petitioner should print and retain an independent copy.

Telephone inquiries related to this electronic decision should be directed to the Electronic Business Center at 1-866-217-9197.

UNITED STATES PATENT AND TRADEMARK OFFICE

Commissioner for Patents
United States Patent and Trademark Office
P.O. Box 1450
Alexandria, VA 22313-1450
www.uspto.gov

MINTZ, LEVIN, COHN, FERRIS, GLOVSKY AND POPEO, P.C.
ONE FINANCIAL CENTER
BOSTON MA 02111

MAILED

JAN 31 2011

OFFICE OF PETITIONS

In re Patent No. 7,655,631	: DECISION ON REQUEST
Issued: February 2, 2010	: FOR RECONSIDERATION
Application No. 11/240,937	: OF PATENT TERM ADJUSTMENT
Filed: September 30, 2005	: AND
Attorney Docket No.	: NOTICE OF INTENT TO ISSUE
39783-501D01US	: CERTIFICATE OF CORRECTION

This is a decision on the "REQUEST FOR RECONSIDERATION OF PATENT TERM INDICATED ON FACE OF PATENT UNDER 37 C.F.R. § 1.705(d)" filed March 31, 2010, requesting that the patent term adjustment determination for the above-identified patent be changed from 307 days to 706 days.

The petition to correct the patent term adjustment indicated on the above-identified patent to indicate that the term of the above-identified patent is extended or adjusted by six hundred sixty-two (662) days is **GRANTED to the extent indicated herein**.

Patentee fails to account for the filing of a Notice of Appeal on July 23, 2009. The 490 days of the over three year period therefore would be consumed by appellate review, beginning on July 23, 2009 and ending on September 4, 2009. The time for appellate review is excluded (490-44); thus the "B delay is 446 days. *See* 35 U.S.C. § 154(b)(1)(B)(ii). As such, the patent term adjustment is 662 days (399 "A delay days" + 446 "B delay days" (490-44) - 183 Applicant delay days), not 706 days.

The Office acknowledges the submission of the required fee of $200.00 set forth in 37 CFR 1.18(e) .

The Office will *sua sponte* issue a certificate of correction. Pursuant to 37 CFR 1.322, the Office will not issue a certificate of correction without first providing assignee or patentee an opportunity to be heard. Accordingly, patentees are given **one (1) month or thirty (30) days**, whichever is longer, from the mail date of this decision to respond. No extensions of time will be granted under § 1.136.

The application is being forwarded to the Certificates of Branch for issuance of a certificate of correction. The Office will issue a certificate of correction indicating that the

term of the above-identified patent is extended or adjusted by **six hundred sixty-two (662)** days.

Telephone inquiries specific to this decision should be directed to the undersigned Petitions Attorney at (571) 272-3212.

Patricia Faison-Ball
Senior Petitions Attorney
Office of Petitions

Enclosure: Copy of DRAFT Certificate of Correction

DRAFT

UNITED STATES PATENT AND TRADEMARK OFFICE

CERTIFICATE OF CORRECTION

PATENT : 7,655,631 B2

DATED : February 2, 2010

INVENTOR(S) : Seema Garde

It is certified that error appears in the above-identified patent and that said Letters Patent is hereby corrected as shown below:

On the cover page,

[*] Notice: Subject to any disclaimer, the term of this patent is extended or adjusted under 35 USC 154(b) by (307) days

Delete the phrase "by 307 days" and insert – by 662 days--

UNITED STATES PATENT AND TRADEMARK OFFICE

Commissioner for Patents
United States Patent and Trademark Office
P.O. Box 1450
Alexandria, VA 22313-1450
www.uspto.gov

KRIEGER INTELLECTUAL PROPERTY, INC.
PO BOX 872438
VANCOUVER WA 98687-2438

MAILED

MAR 04 2011

OFFICE OF PETITIONS

In re Application of	:	
Lum et al.	:	
Application No. 11/241,071	:	DECISION ON PETITION
Filed: September 30, 2005	:	
Attorney Docket No. SLA1819.1	:	

This is a decision on the petition under the unintentional provisions of 37 CFR 1.137(b), filed January 24, 2011, to revive the above-identified application.

The petition is **GRANTED**.

The application became abandoned for failure to reply in a proper and timely manner to the final Office action mailed, April 16, 2010, which set a shortened statutory period for reply of three (3) months. No extensions of time under the provisions of 37 CFR 1.136(a) were obtained. Accordingly, the application became abandoned on July 17, 2010. A Notice of Abandonment was mailed November 24, 2010.

The petition satisfies the requirements of 37 CFR 1.137(b) in that petitioner has supplied (1) the reply in the form of a Request for Continued Examination (RCE) and fee of $810.00 and the submission required by 37 CFR 1.114; (2) the petition fee of $1,620.00; and (3) a proper statement of unintentional delay.

Telephone inquiries concerning this decision should be directed to the undersigned at (571) 272-7751.

This matter is being referred to Technology Center AU 2493 for processing of the Request for Continued Examination under 37 CFR 1.114 and the Amendment filed with the instant petition.

Joan Olszewski
Petitions Examiner
Office of Petitions

UNITED STATES PATENT AND TRADEMARK OFFICE

Commissioner for Patents
United States Patent and Trademark Office
P.O. Box 1450
Alexandria, VA 22313-1450
www.uspto.gov

COOLEY LLP
ATTN: PATENT GROUP
SUITE 1100
777 - 6TH STREET, NW
WASHINGTON, DC 20001

MAILED

APR 11 2011

OFFICE OF PETITIONS

In re Application of	:	
Pawan Nachnani, et al.	:	
Application No. 11/241,073	:	DECISION ON PETITION
Filed: September 30, 2005	:	TO WITHDRAW
Attorney Docket No. BOBJ-135/00US 304661-2266	:	FROM RECORD

This is a decision on the Request to Withdraw as attorney or agent of record under 37 C.F.R. § 1.36(b), filed February 24, 2011.

The request is **NOT APPROVED** because it is moot.

A review of the file record indicates that the power of attorney to Cooley LLP has been revoked by the applicant of the patent application on October 31, 2008. Accordingly, the request to withdraw under 37 C.F.R. § 1.36(b) is moot.

All future communications from the Office will continue to be directed to the below-listed address until otherwise notified by applicant.

Telephone inquires concerning this decision should be directed to Terri Johnson at 571-272-2991.

/Terri Johnson/
Terri Johnson
Petitions Examiner
Office of Petitions

cc: **SAP America c/o Cooley Godward Kronish LLP**
777 6th Street NW, Suite 1100
Washington DC 20001

UNITED STATES PATENT AND TRADEMARK OFFICE

UNITED STATES DEPARTMENT OF COMMERCE
United States Patent and Trademark Office
Address: COMMISSIONER FOR PATENTS
P.O. Box 1450
Alexandria, Virginia 22313-1450
www.uspto.gov

APPLICATION NO.	FILING DATE	FIRST NAMED INVENTOR	ATTORNEY DOCKET NO.	CONFIRMATION NO.
11/241,162	09/30/2005	Richard Mark Horner	1355/US	5311

49278 7590 03/01/2011
SCENERA RESEARCH, LLC
5400 Trinity Road
Suite 303
Raleigh, NC 27607

EXAMINER
KHOSHNOODI, FARIBORZ

ART UNIT	PAPER NUMBER
2164	

MAIL DATE	DELIVERY MODE
03/01/2011	PAPER

Please find below and/or attached an Office communication concerning this application or proceeding.

The time period for reply, if any, is set in the attached communication.

UNITED STATES PATENT AND TRADEMARK OFFICE

Commissioner for Patents
United States Patent and Trademark Office
P.O. Box 1450
Alexandria, VA 22313-1450
www.uspto.gov

John A. Demos
SCENERA RESEARCH, LLC
5400 Trinity Road
Suite 303
Raleigh, North Carolina 27607

In re Application of:
Richard M. HORNER et al
Appl. No.: 11/241,162
Filed: September 30, 2005
For: SYSTEM AND METHOD FOR ASSOCIATING PRESENCE INFORMATION WITH DIGITAL AUDIO

DECISION ON PETITION UNDER 37 CFR § 1.103(a)

This is a decision on the petition for suspension of prosecutions under 37 CFR § 1.103(a) filed on 02 November 2010.

The petition is **GRANTED**.

Pursuant to applicant's requests filed on 02 November 201, action by the Office is suspended on this application under 37 CFR § 1.103(a) for a period of ***three (3) months from the mailing date of this letter***. At the end of this period, applicant is required to notify the examiner and request continuance of prosecution or a further suspension. See MPEP § 709.

Suspension of action under 37 CFR § 1.103(a)-(d) at the applicant's request will cause a reduction in patent term adjustment accumulated (if any) under 37 CFR § 1.703. The reduction is equal to the number of days beginning on the date a request for suspension of action was filed and ending on the date of the termination of the suspension. See 37 CFR § 1.704(c)(1).

Any inquiry concerning this decision should be directed to the undersigned whose telephone number is (571) 272-3613.

/Vincent N. Trans/
Vincent N. Trans, SPRE/QAS
Technology Center 2100
Computer Architecture and Software

UNITED STATES PATENT AND TRADEMARK OFFICE

UNITED STATES DEPARTMENT OF COMMERCE
United States Patent and Trademark Office
Address: COMMISSIONER FOR PATENTS
P.O. Box 1450
Alexandria, Virginia 22313-1450
www.uspto.gov

APPLICATION NO.	FILING DATE	FIRST NAMED INVENTOR	ATTORNEY DOCKET NO.	CONFIRMATION NO.
11/241,162	09/30/2005	Richard Mark Horner	1355/US	5311

49278 7590 06/10/2011
SCENERA RESEARCH, LLC
5400 Trinity Road
Suite 303
Raleigh, NC 27607

EXAMINER
KHOSHNOODI, FARIBORZ

ART UNIT	PAPER NUMBER
2164	

MAIL DATE	DELIVERY MODE
06/10/2011	PAPER

Please find below and/or attached an Office communication concerning this application or proceeding.

The time period for reply, if any, is set in the attached communication.

UNITED STATES PATENT AND TRADEMARK OFFICE

Commissioner for Patents
United States Patent and Trademark Office
P.O. Box 1450
Alexandria, VA 22313-1450
www.uspto.gov

Theodosios Thomas
SCENERA RESEARCH, LLC
5400 Trinity Road
Suite 303
Raleigh, North Carolina 27607

In re Application of: Richard M. HORNER et al Appl. No.: 11/241,162 Filed: September 30, 2005 For: SYSTEM AND METHOD FOR ASSOCIATING PRESENCE INFORMATION WITH DIGITAL AUDIO	DECISION ON PETITION UNDER 37 CFR § 1.103(a)

This is a decision on the petition for suspension of prosecutions under 37 CFR § 1.103(a) filed on 09 June 2011.

The petition is **GRANTED**.

Pursuant to applicant's requests filed on 09 June 2011, action by the Office is suspended on this application under 37 CFR § 1.103(a) for a period of ***three (3) months from the mailing date of this letter***. At the end of this period, applicant is required to notify the examiner and request continuance of prosecution or a further suspension. See MPEP § 709.

Suspension of action under 37 CFR § 1.103(a)-(d) at the applicant's request will cause a reduction in patent term adjustment accumulated (if any) under 37 CFR § 1.703. The reduction is equal to the number of days beginning on the date a request for suspension of action was filed and ending on the date of the termination of the suspension. See 37 CFR § 1.704(c)(1).

Any inquiry concerning this decision should be directed to the undersigned whose telephone number is (571) 272-3613.

/Vincent N. Trans/
Vincent N. Trans, SPRE/QAS
Technology Center 2100
Computer Architecture and Software

UNITED STATES PATENT AND TRADEMARK OFFICE

UNITED STATES DEPARTMENT OF COMMERCE
United States Patent and Trademark Office
Address: COMMISSIONER FOR PATENTS
P.O. Box 1450
Alexandria, Virginia 22313-1450
www.uspto.gov

APPLICATION NO.	FILING DATE	FIRST NAMED INVENTOR	ATTORNEY DOCKET NO.	CONFIRMATION NO.
11/241,162	09/30/2005	Richard Mark Horner	1355/US	5311

49278 7590 09/22/2011
SCENERA RESEARCH, LLC
5400 Trinity Road
Suite 303
Raleigh, NC 27607

EXAMINER
KHOSHNOODI, FARIBORZ

ART UNIT	PAPER NUMBER
2164	

MAIL DATE	DELIVERY MODE
09/22/2011	PAPER

Please find below and/or attached an Office communication concerning this application or proceeding.

The time period for reply, if any, is set in the attached communication.

UNITED STATES PATENT AND TRADEMARK OFFICE

Commissioner for Patents
United States Patent and Trademark Office
P.O. Box 1450
Alexandria, VA 22313-1450
www.uspto.gov

John A. Demos
SCENERA RESEARCH, LLC
5400 Trinity Road
Suite 303
Raleigh, North Carolina 27607

In re Application of:
Richard M. HORNER et al
Appl. No.: 11/241,162
Filed: September 30, 2005
For: SYSTEM AND METHOD FOR ASSOCIATING PRESENCE INFORMATION WITH DIGITAL AUDIO

DECISION ON PETITION UNDER 37 CFR § 1.103(a)

This is a decision on the petition for suspension of prosecutions under 37 CFR § 1.103(a) filed on 20 September 2011.

The petition is **GRANTED**.

Pursuant to applicant's requests filed on 20 September 2011, action by the Office is suspended on this application under 37 CFR § 1.103(a) for a period of ***three (3) months from the mailing date of this letter***. At the end of this period, applicant is required to notify the examiner and request continuance of prosecution or a further suspension. See MPEP § 709.

Suspension of action under 37 CFR § 1.103(a)-(d) at the applicant's request will cause a reduction in patent term adjustment accumulated (if any) under 37 CFR § 1.703. The reduction is equal to the number of days beginning on the date a request for suspension of action was filed and ending on the date of the termination of the suspension. See 37 CFR § 1.704(c)(1).

Any inquiry concerning this decision should be directed to the undersigned whose telephone number is (571) 272-3613.

/Vincent N. Trans/
Vincent N. Trans, SPRE/QAS
Technology Center 2100
Computer Architecture and Software

UNITED STATES PATENT AND TRADEMARK OFFICE

UNITED STATES DEPARTMENT OF COMMERCE
United States Patent and Trademark Office
Address: COMMISSIONER FOR PATENTS
P.O. Box 1450
Alexandria, Virginia 22313-1450
www.uspto.gov

APPLICATION NO.	FILING DATE	FIRST NAMED INVENTOR	ATTORNEY DOCKET NO.	CONFIRMATION NO.
11/241,162	09/30/2005	Richard Mark Horner	1355/US	5311

49278 7590 12/22/2011
SCENERA RESEARCH, LLC
5400 Trinity Road
Suite 303
Raleigh, NC 27607

EXAMINER
KHOSHNOODI, FARIBORZ

ART UNIT	PAPER NUMBER
2164	

MAIL DATE	DELIVERY MODE
12/22/2011	PAPER

Please find below and/or attached an Office communication concerning this application or proceeding.

The time period for reply, if any, is set in the attached communication.

UNITED STATES PATENT AND TRADEMARK OFFICE

Commissioner for Patents
United States Patent and Trademark Office
P.O. Box 1450
Alexandria, VA 22313-1450
www.uspto.gov

John A. Demos
SCENERA RESEARCH, LLC
5400 Trinity Road
Suite 303
Raleigh, North Carolina 27607

In re Application of:
Robert P. MORRIS
Appl. No.: 11/241,162
Filed: September 30, 2005
For: SYSTEM AND METHOD FOR ASSOCIATING PRESENCE INFORMATION WITH DIGITAL AUDIO

DECISION ON PETITION UNDER 37 CFR § 1.103(a)

This is a decision on the petition for suspension of prosecutions under 37 CFR § 1.103(a) filed on 21 December 2011.

The petition is **GRANTED**.

Pursuant to applicant's requests filed on 21 December 2011, action by the Office is suspended on this application under 37 CFR § 1.103(a) for a period of ***three (3) months from the mailing date of this letter***. At the end of this period, applicant is required to notify the examiner and request continuance of prosecution or a further suspension. See MPEP § 709.

Suspension of action under 37 CFR § 1.103(a)-(d) at the applicant's request will cause a reduction in patent term adjustment accumulated (if any) under 37 CFR § 1.703. The reduction is equal to the number of days beginning on the date a request for suspension of action was filed and ending on the date of the termination of the suspension. See 37 CFR § 1.704(c)(1).

Any inquiry concerning this decision should be directed to the undersigned whose telephone number is (571) 272-3613.

/Vincent N. Trans/
Vincent N. Trans, QAS
Technology Center 2100
Computer Architecture and Software

UNITED STATES PATENT AND TRADEMARK OFFICE

UNITED STATES DEPARTMENT OF COMMERCE
United States Patent and Trademark Office
Address: COMMISSIONER FOR PATENTS
P.O. Box 1450
Alexandria, Virginia 22313-1450
www.uspto.gov

APPLICATION NO.	FILING DATE	FIRST NAMED INVENTOR	ATTORNEY DOCKET NO.	CONFIRMATION NO.
11/241,162	09/30/2005	Richard Mark Horner	1355/US	5311

49278 7590 03/29/2012
SCENERA RESEARCH, LLC
5400 Trinity Road
Suite 303
Raleigh, NC 27607

EXAMINER
KHOSHNOODI, FARIBORZ

ART UNIT	PAPER NUMBER
2164	

MAIL DATE	DELIVERY MODE
03/29/2012	PAPER

Please find below and/or attached an Office communication concerning this application or proceeding.

The time period for reply, if any, is set in the attached communication.

UNITED STATES PATENT AND TRADEMARK OFFICE

Commissioner for Patents
United States Patent and Trademark Office
P.O. Box 1450
Alexandria, VA 22313-1450
www.uspto.gov

John A. Demos
SCENERA RESEARCH, LLC
5400 Trinity Road
Suite 303
Raleigh, North Carolina 27607

In re Application of:
Richard M. HORNER et al
Appl. No.: 11/241,162
Filed: September 30, 2005
For: SYSTEM AND METHOD FOR ASSOCIATING PRESENCE INFORMATION WITH DIGITAL AUDIO

DECISION ON PETITION UNDER 37 CFR § 1.103(a)

This is a decision on the petition for suspension of prosecutions under 37 CFR § 1.103(a) filed on 27 March 2012.

The petition is **GRANTED**.

Pursuant to applicant's requests filed on 27 March 2012, action by the Office is suspended on this application under 37 CFR § 1.103(a) for a period of ***three (3) months from the mailing date of this letter***. At the end of this period, applicant is required to notify the examiner and request continuance of prosecution or a further suspension. See MPEP § 709.

Suspension of action under 37 CFR § 1.103(a)-(d) at the applicant's request will cause a reduction in patent term adjustment accumulated (if any) under 37 CFR § 1.703. The reduction is equal to the number of days beginning on the date a request for suspension of action was filed and ending on the date of the termination of the suspension. See 37 CFR § 1.704(c)(1).

Any inquiry concerning this decision should be directed to the undersigned whose telephone number is (571) 272-3613.

/Vincent N. Trans/
Vincent N. Trans, QAS
Technology Center 2100
Computer Architecture and Software

UNITED STATES PATENT AND TRADEMARK OFFICE

Commissioner for Patents
United States Patent and Trademark Office
P.O. Box 1450
Alexandria, VA 22313-1450
www.uspto.gov

CANTOR COLBURN LLP
20 CHURCH STREET, 22ND FLOOR
HARTFORD, CT 06103

MAILED
NOV 23 2010
OFFICE OF PETITIONS

In re Application of :
David Fred Cantrell et al :
Application No. 11/241,231 :
Filed: September 30, 2005 :
Attorney Docket No. GCS0008USC

ON PETITION

This is a decision on the petition, filed November 16, 2010 under 37 CFR 1.313(c)(2) to withdraw the above-identified application from issue after payment of the issue fee.

The petition is **GRANTED**.

The above-identified application is withdrawn from issue for consideration of a submission under 37 CFR 1.114 (request for continued examination). See 37 CFR 1.313(c)(2).

Petitioner is advised that the issue fee paid on November 12, 2010 in the above-identified application cannot be refunded. If, however, the above-identified application is again allowed, petitioner may request that it be applied towards the issue fee required by the new Notice of Allowance.[1]

Telephone inquiries should be directed to Irvin Dingle at (571) 272-3210.

This matter is being referred to Technology Center AU 1621 for processing of the request for continued examination under 37 CFR 1.114 and for consideration of the concurrently filed Information Disclosure Statement.

/Irvin Dingle/
Irvin Dingle
Petitions Examiner
Office of Petitions

---

[1] The request to apply the issue fee to the new Notice may be satisfied by completing and returning the new Issue Fee Transmittal Form PTOL-85(b), which includes the following language thereon: Commissioner for Patents is requested to apply the Issue Fee and Publication Fee (if any) or re-apply any previously paid issue fee to the application identified above. Petitioner is advised that, whether a fee is indicated as being due or not, the Issue Fee Transmittal Form **must** be completed and timely submitted to avoid abandonment. Note the language in bold text on the first page of the Notice of Allowance and Fee(s) Due (PTOL-85).

UNITED STATES PATENT AND TRADEMARK OFFICE

Commissioner for Patents
United States Patent and Trademark Office
P.O. Box 1450
Alexandria, VA 22313-1450
www.uspto.gov

CANTOR COLBURN LLP
20 CHURCH STREET, 22ND FLOOR
HARTFORD, CT 06103

MAILED
NOV 23 2010
OFFICE OF PETITIONS

In re Application of :
David Fred Cantrell et al :
Application No. 11/241,231 : ON PETITION
Filed: September 30, 2005 :
Attorney Docket No. GCS0008USC

This is a decision on the petition, filed November 16, 2010 under 37 CFR 1.313(c)(2) to withdraw the above-identified application from issue after payment of the issue fee.

The petition is **GRANTED**.

The above-identified application is withdrawn from issue for consideration of a submission under 37 CFR 1.114 (request for continued examination). See 37 CFR 1.313(c)(2).

Petitioner is advised that the issue fee paid on November 12, 2010 in the above-identified application cannot be refunded. If, however, the above-identified application is again allowed, petitioner may request that it be applied towards the issue fee required by the new Notice of Allowance.[1]

Telephone inquiries should be directed to Irvin Dingle at (571) 272-3210.

This matter is being referred to Technology Center AU 1621 for processing of the request for continued examination under 37 CFR 1.114 and for consideration of the concurrently filed Information Disclosure Statement.

/Irvin Dingle/
Irvin Dingle
Petitions Examiner
Office of Petitions

---

[1] The request to apply the issue fee to the new Notice may be satisfied by completing and returning the new Issue Fee Transmittal Form PTOL-85(b), which includes the following language thereon: Commissioner for Patents is requested to apply the Issue Fee and Publication Fee (if any) or re-apply any previously paid issue fee to the application identified above. Petitioner is advised that, whether a fee is indicated as being due or not, the Issue Fee Transmittal Form **must** be completed and timely submitted to avoid abandonment. Note the language in bold text on the first page of the Notice of Allowance and Fee(s) Due (PTOL-85).

UNITED STATES PATENT AND TRADEMARK OFFICE

Commissioner for Patents
United States Patent and Trademark Office
P.O. Box 1450
Alexandria, VA 22313-1450
www.uspto.gov

MAILED

MAY 10 2011

OFFICE OF PETITIONS

CANTON COLBURN LLP
20 CHURCH STREET
22ND FLOOR
HARTFORD CT 06103

In re Application of	:	
David Fred Cantrell et al	:	
Application No. 11/241,231	:	DECISION ON PETITION
Filed: September 30, 2005	:	UNDER 37 CFR 1.313(c)
Attorney Docket No. GCS0008USC	:	

This is a decision on the petition under 37 CFR 1.313(c), filed May 9, 2011, to withdraw the above-identified application from issue after payment of the issue fee.

The petition is **GRANTED**.

The above-identified application is withdrawn from issue for consideration of a submission under 37 CFR 1.114 (request for continued examination). *See* 37 CFR 1.313(c)(2).

Petitioner is advised that the issue fee paid on April 21, 2011, cannot be refunded. If, however, this application is again allowed, petitioner may request that it be applied towards the issue fee required by the new Notice of Allowance.[1]

Telephone inquiries should be directed to the undersigned at (571) 272-3208.

This application is being referred to Technology Center AU 1622 for processing of the request for continued examination under 37 CFR 1.114 and for consideration of the concurrently filed IDS.

/Karen Creasy/
Karen Creasy
Petitions Examiner
Office of Petitions

---

[1] *The request to apply the issue fee to the new Notice may be satisfied by completing and returning the new Part B – Fee(s) Transmittal Form (along with any balance due at the time of submission). Petitioner is advised that the Issue Fee Transmittal Form must be completed and timely submitted to avoid abandonment of the application.*

UNITED STATES PATENT AND TRADEMARK OFFICE

Commissioner for Patents
United States Patent and Trademark Office
P.O. Box 1450
Alexandria, VA 22313-1450
www.uspto.gov

Tyco Healthcare Group LP
d/b/a Covidien
555 Long Wharf Drive
Mail Stop 8-N1, Legal Department
New Haven CT 06511

MAILED
DEC 23 2010
OFFICE OF PETITIONS

In re Application of	:	
Michael J. Bettuchi	:	
Application No. 11/241,267	:	DECISION GRANTING PETITION
Filed: September 30, 2005	:	UNDER 37 CFR 1.313(c)(2)
Attorney Docket No. H-US-00079	:	

This is a decision on the petition under 37 CFR 1.313(c)(2), filed, December 21, 2010 to withdraw the above-identified application from issue after payment of the issue fee.

The petition is **GRANTED**.

The above-identified application is withdrawn from issue for consideration of a submission under 37 CFR 1.114 (request for continued examination). *See* 37 CFR 1.313(c)(2).

Petitioner is advised that the issue fee paid on November 3, 2010 cannot be refunded. If, however, this application is again allowed, petitioner may request that it be applied towards the issue fee required by the new Notice of Allowance.[1]

Telephone inquiries should be directed to Terri Johnson at (571) 272-2991.

This application is being referred to Technology Center AU 3721 for processing of the request for continued examination under 37 CFR 1.114 and for consideration of the concurrently filed information disclosure statement.

/Terri Johnson/
Terri Johnson
Petitions Examiner
Office of Petitions

---

[1] *The request to apply the issue fee to the new Notice may be satisfied by completing and returning the new Part B – Fee(s) Transmittal Form (along with any balance due at the time of submission). Petitioner is advised that the Issue Fee Transmittal Form must be completed and timely submitted to avoid abandonment of the application.*

UNITED STATES PATENT AND TRADEMARK OFFICE

UNITED STATES DEPARTMENT OF COMMERCE
United States Patent and Trademark Office
Address: COMMISSIONER FOR PATENTS
P.O. Box 1450
Alexandria, Virginia 22313-1450
www.uspto.gov

TROP, PRUNER & HU, P.C.
1616 S. VOSS ROAD, SUITE 750
HOUSTON, TX 77057-2631

Mail Date: 08/02/2010

Applicant	: Shubhendu S. Mukherjee	: DECISION ON REQUEST FOR
Patent Number	: 7649845	: RECALCULATION of PATENT
Issue Date	: 01/19/2010	: TERM ADJUSTMENT IN VIEW
Application No	: 11/241,329	: OF WYETH AND NOTICE OF INTENT TO
Filed	: 09/30/2005	: ISSUE CERTIFICATE OF CORRECTION
		:

The Request for Recalculation is **GRANTED** to the extent indicated.

The patent term adjustment has been determined to be **1125** days. The USPTO will *sua sponte* issue a certificate of correction reflecting the amount of PTA days determined by the recalculation.

Prior to the issuance of the certificate of correction, the USPTO will afford patentee an opportunity to be heard and request reconsideration. Accordingly, patentee has **one month or thirty (30) days**, whichever is longer, to file a request for reconsideration of this patent term adjustment calculation. See 35 U.S.C. 154(b)(3)(B)(ii) and 37 CFR 1.322(a)(4). No extensions of time will be granted under 37 CFR 1.136.

Patentee should use document code PET.OP if electronically filing a request for reconsideration of this patent term adjustment calculation. The patentee must also include the information required by 37 CFR 1.705(b)(2) and the fee required by 37 CFR 1.18(e). If patentee does not file a timely request for reconsideration of this patent term adjustment calculation including the information required by 37 CFR 1.705(b)(2) and the fee required by 37 CFR 1.18(e), the USPTO will issue a certificate of correction reflecting the PTA determination noted above.

Patentee should be aware that in order to preserve the right to review in the United States District Court for the District of Columbia of the USPTO patent term adjustment determination, patentee must ensure that he or she also take the steps required under 35 U.S.C. 154(b)(4)(A) in a timely manner. Nothing in the request for recalculation should be construed as providing an alternative time frame for commencing a civil action under 35 U.S.C. 154(b)(4)(A).

Any questions concerning this decision should be directed to the Office of Patent Legal Administration at 571-272-7702.

UNITED STATES PATENT AND TRADEMARK OFFICE

Commissioner for Patents
United States Patent and Trademark Office
P.O. Box 1450
Alexandria, VA 22313-1450
www.uspto.gov

PATTERSON & SHERIDAN, L.L.P.
3040 POST OAK BOULEVARD
SUITE 1500
HOUSTON TX 77056

MAILED

SEP 29 2010

OFFICE OF PETITIONS

In re Patent No. 7,789,219	:	NOTICE
Issue Date: September 7, 2010	:	
Application No. 11/241,348	:	
Filed: September 30, 2005	:	
Attorney Docket No. BUZZ/0018	:	

This is a notice regarding your request, August 18, 2010, for acceptance of a fee deficiency submission under 37 CFR 1.28.

On September 1, 1998, the Court of Appeals for the Federal Circuit held that 37 CFR 1.28(c) is the sole provision governing the time for correction of the erroneous payment of the issue fee as a small entity. **See DH Technology v. Synergystex International, Inc. 154 F.3d 1333, 47 USPQ2d 1865 (Fed. Cir. Sept. 1, 1998).**

The Office no longer investigates or rejects original or reissue applications under 37 CFR 1.56. **1098 Off. Gaz. Pat. Office 502 (January 3, 1989).** Therefore, nothing in this Notice is intended to imply that an investigation was done.

Your fee deficiency submission under 37 CFR 1.28 is hereby **ACCEPTED**.

This patent is no longer entitled to small entity status. Accordingly, all future fees paid in this patent must be paid at the large entity rate.

Liana Walsh
Petitions Examiner
Office of Petitions

UNITED STATES PATENT AND TRADEMARK OFFICE

Commissioner for Patents
United States Patent and Trademark Office
P.O. Box 1450
Alexandria, VA 22313-1450
www.uspto.gov

MAILED AUG 06 2010

H. JAY SPIEGEL
H. JAY SPIEGEL & ASSOCIATES
P.O. Box 11
Mount Vernon VA 22121

In re Application of: Moore et al. Application No.: 11/241502 Filed: September 30, 2005 Title: Helmet Fastening Element	DECISION ON PETITION TO MAKE SPECIAL FOR NEW APPLICATION UNDER 37 C.F.R. § 1.102 & M.P.E.P. § 708.02

This is a decision on the petition filed on May 19, 2010 to make the above-identified application special for accelerated examination procedure under 37 C.F.R. § 1.102(d).

The petition to make the application special is **DENIED**.

REGULATION AND PRACTICE

To be eligible for accelerated examination under 37 C.F.R. § 1.102(d) and pursuant to the "Change to Practice for Petitions in Patent Applications to Make Special and for Accelerated Examination" published in the Federal Register on June 26, 2006 (71 Fed. Reg. 36323), the following conditions must be satisfied:

1. The application must be a non-reissue utility or design application filed under 37 CFR 1.111(a);
2. The application, the petition and the required fees must be filed electronically using the USPTO's electronic filing system (EFS), or EFS-web; if not filed electronically, a statement asserting that EFS and EFS-web were not available during the normal business hours;
3. The application, at the time of filing, must be complete under 37 CFR 1.51 and in condition for examination;
4. The application must contain three or fewer independent claims and twenty or fewer total claims and the claims must be directed to a single invention.
5. The petition must be filed with the application.

The application as filed is not eligible for the accelerated examination under 37 C.F.R. § 1.102(d) because the petition was not filed with the application. As noted in the policy statement referenced above, any petition to make special filed on or after the effective date must meet the new requirements set forth in the 71 Fed. Reg. 36323 notice. Applications filed before

the effective date will not be eligible for the revised accelerated examination program. The effective date of the change in practice was August 25, 2006. Thus the instant petition must be reviewed under the revised practice and the instant application is ineligible.

The petition appears on its face to have been filed without recognition of the August 25, 2006 policy change to the petition to make special program. The changes to the program are substantial. The Notice of Federal Register on June 26, 2006 (71 Fed. Reg. 36323) can be accessed on the internet at
http://www.uspto.gov/web/offices/com/sol/notices/71fr36323.pdf

Further guidance may be found website of the USPTO at
http://www.uspto.gov/web/patents/accelerated

under the accelerated examination link.

For the above-stated reasons, the petition is **DENIED**. The application will therefore be taken up by the examiner for action in its regular turn.

Any inquiry regarding this decision should be directed to Linda Sholl, TC 3700 Special Program Examiner, at (571) 272-4391.

Linda Sholl
Special Program Examiner
Technology Center 3700

UNITED STATES PATENT AND TRADEMARK OFFICE

Commissioner for Patents
United States Patent and Trademark Office
P.O. Box 1450
Alexandria, VA 22313-1450
www.uspto.gov

ERICSSON INC.
6300 LEGACY DRIVE
M/S EVR 1-C-11
PLANO, TX 75024

MAILED

NOV 03 2010

OFFICE OF PETITIONS

In re Application of	:	
Reial et al.	:	
Application No. 11/241, 680	:	DECISION ON PETITION
Filed: September 30, 2005	:	
Attorney Docket No. P20228-US1	:	

This is a decision on the petition under the unintentional provisions of 37 CFR 1.137(b), filed October 8, 2010, to revive the above-identified application.

The petition is **GRANTED**.

This application became abandoned for failure to timely pay the issue and publication fees on or before September 8, 2010, as required by the Notice of Allowance and Fee(s) Due mailed June 8, 2010. Accordingly, the application became abandoned on September 9, 2010. A Notice of Abandonment was mailed September 27, 2010.

The petition satisfies the requirements of 37 CFR 1.137(b) in that petitioner has supplied (1) the reply in the form of payment of the issue fee of $1,510 and the publication fee of $300, (2) the petition fee of $1,620; and (3) a proper statement of unintentional delay.

Telephone inquiries concerning this decision should be directed to the undersigned at (571)272-6059.

This application is being referred to the Office of Data Management for processing into a patent.

A. Kelley

Alicia Kelley
Petitions Examiner
Office of Petitions

UNITED STATES PATENT AND TRADEMARK OFFICE

Commissioner for Patents
United States Patent and Trademark Office
P.O. Box 1450
Alexandria, VA 22313-1450
www.uspto.gov

WILSON, SONSINI, GOODRICH &
ROSATI
650 PAGE MILL ROAD
PALO ALTO CA 94304-1050

MAILED
NOV 03 2010
OFFICE OF PETITIONS

In re Application of :
Eisen Ori :
Application No. 11/241,739 :
Filed: September 29, 2005 :
Attorney Docket No. 31718-701.501 :
Title: METHOD AND SYSTEM FOR IDENTIFYING USERS AND DETECTING FRAUD BY USE OF THE INTERNET :

ON APPLICATION FOR PATENT TERM ADJUSTMENT

This is a decision on the "REQUEST FOR RECONSIDERATION OF THE PATENT TERM ADJUSTMENT AND APPLICATION FOR PATENT TERM ADJUSTMENT UNDER 37 CFR 1.705," filed July 28, 2010. Applicant request that the initial Determination of Patent Term Adjustment under 35 U.S.C. 154(b) be corrected.

The application for patent term adjustment is **GRANTED**.

The Office has updated the PAIR screen to reflect that the correct Patent Term Adjustment (PTA) determination at the time of the mailing of the Notice of Allowance is three hundred three **(303)** days. A copy of the updated PAIR screen, showing the correct determination, is enclosed.

The Office acknowledges submission of the $200.00 fee set forth in 37 CFR 1.18(e). No additional fees are required.

On June 24, 2010, the Office mailed a Determination of Patent Term Adjustment under 35 U.S.C. 154(b) in the above-identified application. Applicant was advised that the patent term adjustment to date is 360 days. In response, applicant timely filed the instant request for reconsideration of the patent term adjustment along with payment of the fee set forth in 37 C.F.R. § 1.18(e).

Applicant contends that a reduction of 57 days pursuant to 37 CFR 1.704(c)(8) is required for the submission of a supplemental reply on June 26, 2009.

A review of the application history confirms that patentees should have been assessed a delay of fifty-seven (57) days for the submission of a supplemental response on June 26, 2010. 37 CFR 1.704(c) provides that:

> Circumstances that constitute a failure of the applicant to engage in reasonable efforts to conclude processing or examination of an application also include the following circumstances, which will result in the following reduction of the period of adjustment set forth in § 1.703 to the extent that the periods are not overlapping:
>
> (8) Submission of a supplemental reply or other paper, other than a supplemental reply or other paper expressly requested by the examiner, after a reply has been filed, in which case the period of adjustment set forth in § 1.703 shall be reduced by the number of days, if any, beginning on the day after the date the initial reply was filed and ending on the date that the supplemental reply or other such paper was filed;

The 57 day delay is calculated beginning on May 1, 2009 the day after the submission of the amendment on April 30, 2009 and ends on June 26, 2009 the day the supplemental reply was submitted.

Applicant's delay prior to the mailing of the Notice of Allowance is 157 (58 + 24 + 57 + 14 + 4) days. Office delay prior to the mailing of the Notice of Allowance is 460 days.

In view thereof, the patent term adjustment at the time of the mailing of the notice of allowance is 303 days.

Any request for reconsideration of the patent term adjustment indicated on the patent must be timely filed within 2 months after issuance pursuant to 37 CFR 1.705(d) and **must** include payment of the required fee under 37 CFR 1.18(e).

The Office of Data Management has been advised of this decision. This application is being referred to the Office of Data Management for issuance of the patent.

Telephone inquiries specific to this matter should be directed to Petitions Attorney Charlema Grant at (571) 272-3215.

Anthony Knight
Director
Office of Petitions

Enclosure: Copy of REVISED PALM Screen

Patent Term Adjustments

PTA/PTE Information | Patent Term Adjustment | Patent Term Extension

Application Number*: 11241739 Search | Explanation of PTA Calculation | Explanation of PTE Calculation

PTA Calculations for Application: 11241739

Application Filing Date	09/29/2005	OverLapping Days Between (A and B) or (A and C)	0
Issue Date of Patent		Non-Overlapping USPTO Delays:	460
A Delays	460	PTO Manual Adjustment	-57
B Delays	0	Applicant Delay (APPL)	100
C Delays	0	Total PTA (days)	303

* - Sorted Column

File Contents History

Action Number	Action Recorded Date	Action Due Date	Action Code	Action Description	Duration PTO	Duration APPL	Parent Action Number
131	11/02/2010		P028	Adjustment of PTA Calculation by PTO		57	0
118	06/24/2010		MN/=.	Mail Notice of Allowance			0
117	06/22/2010		IREV	Issue Revision Completed			0
116	06/22/2010		DVER	Document Verification			0
115	06/22/2010		N/=.	Notice of Allowance Data Verification Completed			0
114	06/21/2010		EX.A	Examiner's Amendment Communication			0
113	06/21/2010		CNTA	Notice of Allowability			0
112	06/15/2010		MEXIN	Mail Examiner Interview Summary (PTOL - 413)			0
111	06/10/2010		EXIN	Examiner Interview Summary Record (PTOL - 413)			0
110	06/10/2010		EXIN	Examiner Interview Summary Record (PTOL - 413)			0
108	04/13/2010		FWDX	Date Forwarded to Examiner			0
109	03/24/2010		IDSC	Information Disclosure Statement considered			0
107	03/24/2010		A...	Response after Non-Final Action			0
106	03/24/2010		M844	Information Disclosure Statement (IDS) Filed			0
105	03/24/2010		RCAP	Reference capture on IDS			0
104	03/24/2010		WIDS	Information Disclosure Statement (IDS) Filed			0
103	03/05/2010		MEXIN	Mail Examiner Interview Summary (PTOL - 413)			0
102	02/25/2010		EXIN	Examiner Interview Summary Record (PTOL - 413)			0
101	01/06/2010		MCTNF	Mail Non-Final Rejection			0
100	01/04/2010		CTNF	Non-Final Rejection			0
98	10/21/2009		FWDX	Date Forwarded to Examiner			0
96	10/21/2009		FWDX	Date Forwarded to Examiner			0
94	10/21/2009		FWDX	Date Forwarded to Examiner			0
92	10/21/2009		ABN9	Disposal for a RCE / CPA / R129			0
97	10/19/2009	10/15/2009	SA..	Supplemental Response		4	93
95	10/15/2009		AMSB	Amendment Submitted/Entered with Filing of CPA/RCE			0
93	10/15/2009	10/01/2009	RCEX	Request for Continued Examination (RCE)		14	83
91	10/15/2009		BRCE	Workflow - Request for RCE - Begin			0
90	09/15/2009		MCTAV	Mail Advisory Action (PTOL - 303)			0
89	09/14/2009		CTAV	Advisory Action (PTOL-303)			0
88	09/08/2009		FWDX	Date Forwarded to Examiner			0
99	09/01/2009		IDSC	Information Disclosure Statement considered			0
87	09/01/2009		A.NE	Amendment after Final Rejection			0
86	09/01/2009		RCAP	Reference capture on IDS			0
85	09/01/2009		M844	Information Disclosure Statement (IDS) Filed			0
84	09/01/2009		WIDS	Information Disclosure Statement (IDS) Filed			0
83	07/01/2009		MCTFR	Mail Final Rejection (PTOL - 326)			0
82	07/01/2009		CTFR	Final Rejection			0
78	05/20/2009		FWDX	Date Forwarded to Examiner			0
81	04/30/2009		IDSC	Information Disclosure Statement considered			0
80	04/30/2009		RCAP	Reference capture on IDS			0
79	04/30/2009	04/30/2009	M844	Information Disclosure Statement (IDS) Filed			77
77	04/30/2009		A...	Response after Non-Final Action			0
76	04/30/2009		WIDS	Information Disclosure Statement (IDS) Filed			0
75	04/23/2009		MEXIN	Mail Examiner Interview Summary (PTOL - 413)			0
74	04/21/2009		EXIN	Examiner Interview Summary Record (PTOL - 413)			0
73	03/09/2009		MCTNF	Mail Non-Final Rejection			0
72	03/06/2009		CTNF	Non-Final Rejection			0
70	01/28/2009		FWDX	Date Forwarded to Examiner			0
68	01/28/2009		FWDX	Date Forwarded to Examiner			0
66	01/28/2009		ABN9	Disposal for a RCE / CPA / R129			0
69	01/09/2009		AMSB	Amendment Submitted/Entered with Filing of CPA/RCE			0
67	01/09/2009	12/16/2008	RCEX	Request for Continued Examination (RCE)		24	55
65	01/09/2009		XT/G	Request for Extension of Time - Granted			0
64	01/09/2009		BRCE	Workflow - Request for RCE - Begin			0
61	12/23/2008		MEXIN	Mail Examiner Interview Summary (PTOL - 413)			0
60	12/18/2008		EXIN	Examiner Interview Summary Record (PTOL - 413)			0
71	11/21/2008		IDSC	Information Disclosure Statement considered			0
63	11/21/2008		M844	Information Disclosure Statement (IDS) Filed			0
62	11/21/2008		RCAP	Reference capture on IDS			0
58	11/21/2008		WIDS	Information Disclosure Statement (IDS) Filed			0
55	09/16/2008		MCTFR	Mail Final Rejection (PTOL - 326)			0
54	09/13/2008		CTFR	Final Rejection			0
52	09/10/2008		FWDX	Date Forwarded to Examiner			0
51	07/31/2008	06/03/2008	A...	Response after Non-Final Action		58	47
50	07/31/2008		XT/G	Request for Extension of Time - Granted			0
57	07/16/2008		RCAP	Reference capture on IDS			0
56	07/16/2008		M844	Information Disclosure Statement (IDS) Filed			0
53	07/16/2008		IDSC	Information Disclosure Statement considered			0
49	07/16/2008		WIDS	Information Disclosure Statement (IDS) Filed			0
48	05/13/2008		DOCK	Case Docketed to Examiner in GAU			0
47	03/03/2008	11/29/2006	MCTNF	Mail Non-Final Rejection	460		-1
46	02/29/2008		CTNF	Non-Final Rejection			0
32	02/14/2008		DOCK	Case Docketed to Examiner in GAU			0
38	01/11/2008		IDSC	Information Disclosure Statement considered			0
37	01/11/2008		RCAP	Reference capture on IDS			0
36	01/11/2008		M844	Information Disclosure Statement (IDS) Filed			0
30	01/11/2008		WIDS	Information Disclosure Statement (IDS) Filed			0
39	11/05/2007		IDSC	Information Disclosure Statement considered			0
29	11/05/2007		RCAP	Reference capture on IDS			0
28	11/05/2007		M844	Information Disclosure Statement (IDS) Filed			0
27	11/05/2007		WIDS	Information Disclosure Statement (IDS) Filed			0
26	10/11/2007		PG-ISSUE	PG-Pub/Issue Notification			0
25	06/21/2007		L130	Receipt of all Acknowledgement Letters			0
24	06/21/2007		L197	Receipt of Acknowledgment Letter			0
23	06/21/2007		L197	Receipt of Acknowledgment Letter			0
22	03/05/2007		DOCK	Case Docketed to Examiner in GAU			0
40	02/06/2007		IDSC	Information Disclosure Statement considered			0

Documentation Explo

21.7	02/06/2007		EIDS.	Electronic Information Disclosure Statement			0
21	02/06/2007		WIDS	Information Disclosure Statement (IDS) Filed			0
41	12/01/2006		IDSC	Information Disclosure Statement considered			0
20.7	12/01/2006		EIDS.	Electronic Information Disclosure Statement			0
20	12/01/2006		WIDS	Information Disclosure Statement (IDS) Filed			0
42	03/24/2006		IDSC	Information Disclosure Statement considered			0
19	03/24/2006		RCAP	Reference capture on IDS			0
18.7	03/24/2006		M844	Information Disclosure Statement (IDS) Filed			0
18	03/24/2006		WIDS	Information Disclosure Statement (IDS) Filed			0
17	01/27/2006		TSSCOMP	IFW TSS Processing by Tech Center Complete			0
16	01/27/2006		DOCK	Case Docketed to Examiner in GAU			0
14	01/03/2006		OIPE	Application Dispatched from OIPE			0
13	01/03/2006		COMP	Application Is Now Complete			0
12	12/21/2005		FLFEE	Payment of additional filing fee/Preexam			0
11	12/21/2005		OATHDECL	A statement by one or more inventors satisfying the requirement under 35 USC 115, Oath of the Applic			0
10	11/01/2005		INCD	Notice Mailed--Application Incomplete--Filing Date Assigned			0
8	10/28/2005		ML196	Agency Referral Letter Mailed			0
7	10/28/2005		ML196	Agency Referral Letter Mailed			0
6	10/27/2005		L196	Referred by L&R for Third-Level Security Review. Agency Referral Letter Generated			0
5	10/27/2005		L196	Referred by L&R for Third-Level Security Review. Agency Referral Letter Generated			0
4	10/26/2005		L198	Referred to Level 2 (LARS) by OIPE CSR			0
3	10/26/2005		CLSS	CASE CLASSIFIED BY OIPE			0
43	10/21/2005		IDSC	Information Disclosure Statement considered			0
15.7	10/21/2005		M844	Information Disclosure Statement (IDS) Filed			0
15	10/21/2005		WIDS	Information Disclosure Statement (IDS) Filed			0
2	10/11/2005		SCAN	IFW Scan & PACR Auto Security Review			0
1	09/29/2005		IEXX	Initial Exam Team nn			0

Export to: Excel

UNITED STATES PATENT AND TRADEMARK OFFICE

Commissioner for Patents
United States Patent and Trademark Office
P.O. Box 1450
Alexandria, VA 22313-1450
www.uspto.gov

Margaret Anderson
106 E. 6th Street, Suite 900
Austin TX 78701

MAILED

MAR 14 2011

OFFICE OF PETITIONS

In re Application of	:	
EDWARD K.Y. JUNG, ET AL.	:	
Application No. 11/241,742	:	DECISION ON PETITION
Filed: September 30, 2005	:	TO WITHDRAW
Attorney Docket No. **QQ1-0136US**	:	FROM RECORD

This is a decision on the Request to Withdraw as attorney or agent of record under 37 CFR § 1.36(b), filed January 27, 2011.

The request is **NOT APPROVED**.

The request cannot be approved because the Office no longer accept address changes to a new practitioner/customer number or law firm filed with a request, absent the filing of a power of attorney to the new representative.

The Office will only accept correspondence address changes to the most current address information provided for the assignee of the entire interest *who properly became of record under 37 CFR 3.71* or, the most current address information provided for the first named inventor. 37 CFR 3.71(c) states:

> *An assignee becomes of record either in a national patent application or a reexamination proceeding by filing a statement in compliance with § 3.73(b) that is signed by a party who is authorized to act on behalf of the assignee.*

The assignee must establish its ownership of the patent to the satisfaction of the Director. In this regard, the statement under 37 CFR 3.73(b) must have either: (i) documentary evidence of a chain of title from the original owner to the assignee (*e.g.*, copy of an executed assignment), and a statement affirming that the documentary evidence of the chain of title from the original owner to the assignee was or concurrently is being submitted for recordation pursuant to § 3.11; or (ii) a statement specifying where documentary evidence of a chain of title from the original owner to the assignee is recorded in the assignment records of the Office (*e.g.*, reel and frame number).

A courtesy copy of this decision is being mailed to the address on the request. However, all future communications from the Office will continue to be directed to the above-listed address until otherwise notified by applicant.

Telephone inquiries concerning this decision should be directed to JoAnne Burke at 571-272-4584.

JoAnne Burke
Petitions Examiner
Office of Petitions

cc: LEE & HAYE, PLLC
601 W RIVERSIDE
SUITE 1400
SPOKANE, WA 99201

UNITED STATES PATENT AND TRADEMARK OFFICE

Commissioner for Patents
United States Patent and Trademark Office
P.O. Box 1450
Alexandria, VA 22313-1450
www.uspto.gov

DORSEY & WHITNEY LLP - MINNEAPOLIS
ATTENTION: PATENT PROSECUTION DOCKETING DEPARTMENT
INTELLECTUAL PROPERTY PRACTICE GROUP - PT/23RD FL
50 SOUTH SIXTH STREET, SUITE 1500
MINNEAPOLIS, MN 55402-1498

MAILED

FEB 09 2012

OFFICE OF PETITIONS

ON PETITION

In re Application of :
William J. Veeneman, et. al. :
Application No. 11/241,774 :
Filed: September 29, 2005 :
Attorney Docket No. 185822/US/2 :

This is a decision on the petition under 37 CFR 1.137(b), filed January 12, 2012, to revive the above-identified application.

The application became abandoned for failure to timely reply to the final Office action mailed June 30, 2009. A Notice of Abandonment was mailed on January 6, 2010.

A grantable petition under 37 CFR 1.137(b) must be accompanied by: (1) the required reply, unless previously filed; (2) the petition fee as set forth in 37 CFR 1.17(m); (3) a statement that the entire delay in filing the required reply from the due date for the reply until the filing of a grantable petition pursuant to 37 CFR 1.137(b) was unintentional[1]; and (4) any terminal disclaimer (and fee as set forth in 37 CFR 1.20(d)) required by 37 CFR 1.137(d). The present petition lacks item (3) above.

In this regard, the statement of unintentional delay cannot be accepted since the present petition is unsigned. Therefore, the present petition is **dismissed**.

Any request for reconsideration of this decision must be submitted within **TWO (2) MONTHS** from the mail date of this decision. Extensions of time under 37 CFR 1.136(a) are permitted. The reconsideration request should include a cover letter entitled "Renewed Petition under 37 CFR 1.137(b)." This is **not** a final agency action within the meaning of 5 U.S.C. § 704.

[1] Where there is a question as to whether either the abandonment or the delay in filing a petition under 37 CFR 1.137 was unintentional, the Commissioner may require additional information. See MPEP 711:03(c)(III)(C) and (D).

Further correspondence with respect to this matter should be addressed as follows:

By mail: Mail Stop PETITION
Commissioner for Patents
P. O. Box 1450
Alexandria, VA 22313-1450

By hand: U. S. Patent and Trademark Office
Customer Service Window, Mail Stop Petitions
Randolph Building
401 Dulany Street
Alexandria, VA 22314

The centralized facsimile number is (571) 273-8300.

The renewed petition under 37 CFR 1.78(a)(3) is being held in abeyance until a grantable petition to revive under 37 CFR 1.137(b) has been received.

Telephone inquiries concerning this decision should be directed to the undersigned at (571) 272-3226.

/Andrea Smith/
Andrea Smith
Petitions Examiner
Office of Petitions

UNITED STATES PATENT AND TRADEMARK OFFICE

Commissioner for Patents
United States Patent and Trademark Office
P.O. Box 1450
Alexandria, VA 22313-1450
www.uspto.gov

PACIFIC BIOSCIENCES OF CALIFORNIA, INC.
1380 WILLOW ROAD
MENLO PARK CA 94025

MAILED
FEB 09 2012
OFFICE OF PETITIONS

In re Patent No. 7,405,281	:	
Issued: July 29, 2008	:	
Application No. 11/241,809	:	ON PETITION
Filed: September 29, 2005	:	
Attorney Docket No: 01-000900US	:	

This is a decision regarding your request for acceptance of a fee deficiency submission and loss of small entity status filed January 24, 2012 under 37 CFR 1.28.

On September 1, 1998, the Court of Appeals for the Federal Circuit held that 37 CFR 1.28(c) is the sole provision governing the time for correction of the erroneous payment of the issue fee as a small entity. See DH Technology v. Synergystex International, Inc.. 154 F.33d 1333, 47 USPQ2d 1865 (Fed. Cir. Sept. 1, 1998).

The Office no longer investigates or rejects original or reissue applications under 37 CFR 1.56. 1098 Off. Gaz. Pat. Office 502 (January 3, 1989). Therefore nothing in this Notice is intended to imply that an investigation was done.

Your fee deficiency submission under 37 CFR 1.28 is hereby accepted and the petition is **GRANTED**. Status as a small entity has also been removed.

Inquiries related to this communication should be directed to the Office of Petitions Staff at (571) 272-3282.

Patricia Faison-Ball
Senior Petitions Attorney
Office of Petitions

UNITED STATES PATENT AND TRADEMARK OFFICE

Commissioner for Patents
United States Patent and Trademark Office
P.O. Box 1450
Alexandria, VA 22313-1450
www.uspto.gov

WILLIAMS, MORGAN & AMERSON
10333 RICHMOND, SUITE 1100
HOUSTON TX 77042

MAILED

AUG 15 2011

OFFICE OF PETITIONS

In re Application of	:	
Louis Gwyn Samuel et al.	:	
Application No. 11/241, 843	:	DECISION ON PETITION
Filed: September 30, 2005	:	
Attorney Docket No. **2100.019300**	:	

This is a decision on the petition under the unintentional provisions of 37 CFR 1.137(b), filed June 21, 2011, to revive the above-identified application.

The petition is **GRANTED**.

The two-month period for filing an appeal brief under 37 CFR 41.37 (accompanied by the fee required by 37 CFR 41.20(b)(2)), runs from the date of this decision.

This application became abandoned for failure to timely file a reply within the meaning of 37 CFR 1.113 to the final Office action of December 4, 2009. The proposed reply required for consideration of a petition to revive must be a Notice of Appeal (and appeal fee required by 37 CFR 41.20(b)(2)), an amendment that *prima facie* places the application in condition for allowance, a Request for Continued Examination (RCE) and submission (37 CFR 1.114), or the filing of a continuing application under 37 CFR 1.53(b). See MPEP 711.03(c)(III)(A)(2). No extensions of time pursuant to the provisions of 37 CFR 1.136(a) were obtained. Accordingly, the date of abandonment of this application is July 28, 2010.

The petition satisfies the requirements of 37 CFR 1.137(b) in that petitioner has supplied (1) the reply in the form of a Notice of Appeal filed on July 30, 2010; (2) the petition fee of $1,620; and (3) a proper statement of unintentional delay.

An extension of time under 37 CFR 1.136 must be filed prior to the expiration of the maximum extendable period for reply. *See* In re Application of S., 8 USPQ2d 1630, 1631 (Comm'r Pats. 1988). Since the $2,350 extension of time fee submitted with the Notice of Appeal on July 30, 2010, was subsequent to the maximum extendable period for reply, petitioner may request a refund of this fee by writing to the following address: Mail Stop 16, Commissioner for Patents, P. O. Box 1450, Alexandria, VA 22313-1450. A copy of this decision should accompany petitioner's request.

Telephone inquiries concerning this decision should be directed to JoAnne Burke at (571) 272-4584.

This application is being referred to Technology Center AU 2612 to await the filing of an appeal brief or for such other appropriate reply as may be submitted to continue prosecution of the application.

JoAnne Burke
Petitions Examiner
Office of Petitions

UNITED STATES PATENT AND TRADEMARK OFFICE

10-7-2010

Commissioner for Patents
United States Patent and Trademark Office
P.O. Box 1450
Alexandria, VA 22313-1450
www.uspto.gov

Patent No. : 7,514,750 B2
Ser. No. : 11/241866
Inventor(s) : Mauder, et. al.
Issued : July 4, 2009

Re: Request for Certificate of Correction

Consideration has been given your request for the issuance of a certificate of correction for the above-identified patent under the provisions of Rule(s) 1.322.

Assignees' names and addresses (assignment data) printed in a patent, are based *solely* on information supplied in the appropriate space for identifying the assignment data, i.e., item 3 of the Issue Fee Transmittal Form PTOL-85B. Granting of a request under 37 CFR 3.81(b) is required to correct applicant's error providing ***incorrect or erroneous*** assignment data, *before* issuance of a Certificate of Correction, under 37 CFR 1.323 *(see Manual of Patent Examining Procedures (M.P.E.P) Chp.1400, sect. 1481).* This procedure is required *at any time after the issue fee is paid*, including after issuance of the patent.

In view of the foregoing, your request is hereby denied.

A request to correct the Assignee under 37 CFR 3.81(b) should include:

A. **the processing fee set forth in 37 CFR 1.17(i) (currently $130);**
B. a statement that the failure to include the correct assignee name on the PTOL-85B was inadvertent; and
C. a copy of the Notice of Recordation of Assignment Document, reflecting the reel and frame number where the assignment(s) is recorded and/or reflecting proof of *the date* the assignment was submitted for recordation.

In the Request, Applicant(s) may request that the file be forwarded to Certificates of Correction Branch, for issuance of a Certificate of Correction, if the Request is granted.

Any request under 37 CFR 3.81(b) should be directed to the following address or facsimile number:

By mail: Mail Stop PETITIONS
Commissioner for Patents
Post Office Box 1450
Alexandria, VA 22313-1450

By hand: Customer Service Window
Mail Stop Petitions
Randolph Building
40l Dulany Street
Alexandria, VA 22314

By fax: (703) 872-9306
ATTN: Office of Petitions

If a fee (currently $100) was previously submitted for consideration of a Request for Certificate of Correction, under CFR 1.323, to correct assignment data, , no additional fee is required.

Eva James
For Mary Diggs
Decisions & Certificates
of Correction Branch
(703) 756-1583 or 1580

R. Moorman
Maginot, Moore & Beck LLP
Chase Tower 111 Monument Circle, Suite 3250
Indianapolis, Indiana 46204-5109

ej

UNITED STATES PATENT AND TRADEMARK OFFICE

Commissioner for Patents
United States Patent and Trademark Office
P.O. Box 1450
Alexandria, VA 22313-1450
www.uspto.gov

NELSON MULLINS RILEY &
SCARBOROUGH LLP
FLOOR 30, SUITE 3000
ONE POST OFFICE SQUARE
BOSTON MA 02109

MAILED
MAY 20 2011
OFFICE OF PETITIONS

In re Patent of Xu	:	DECISION ON
Patent No. 7,892,793	:	REQUEST FOR RECONSIDERATION
Issue Date: February 22, 2011	:	OF
Application No. 11/241,873	:	PATENT TERM ADJUSTMENT &
Filed: September 30, 2005	:	NOTICE OF INTENT TO ISSUE
Atty Docket No. UMY-038CPRCE		

This is a decision on the APPLICATION FOR PATENT TERM ADJUSTMENT INCLUDING REQUEST FOR RECONSIDERATION UNDER 37 CFR 1.705(d), filed April 21, 2011. Patentee requests that the revised patent term adjustment indicated on the patent be corrected from eight hundred one (801) days to three hundred forty-five (345), or alternatively, nine hundred fifty-four (954) days.

The petition is **GRANTED to the extent indicated herein.**

The patent term adjustment indicated in the patent is to be corrected by issuance of a certificate of correction showing a revised Patent Term Adjustment of three hundred forty-five (345) days.

On February 22, 2011, the above-identified application matured into U.S. Patent No. 7,892,793 with a revised patent term adjustment of 801 days. On April 21, 2011, patentee timely filed the instant petition.

Patentee argues that the patent term adjustment indicated in the patent is incorrect and should be recalculated. Patentee disputes the 37 CFR 1.702(a)(1) adjustment of 291 days associated with the mailing of a miscellaneous communication to applicant on September 17, 2007, and instead argues a 615 day adjustment should have been entered for the restriction requirement mailed on August 6, 2008. Patentee discloses the Office failed to enter a reduction in connection with the filing

of a complete reply on October 17, 2007 to the Notice to File Missing Parts of Nonprovisional Application, mailed November 15, 2005. Patentee discloses the Office failed to enter a reduction in connection with the filing of a supplemental reply to the October 17, 2007 reply on October 18, 2007. Finally, patentee asserts the Office failed to properly calculate the three years to issue guarantee of 35 U.S.C. 154(b)(1)(B) and 37 CFR 1.702(b) (hereinafter, "B delay").

Patentee asserts the Office entered an incorrect a period of reduction for Office delay in mailing at least one of a notification under 35 U.S.C. 132 not later than fourteen months after the date on which the application was filed.

The correct length of adjustment hinges on the Office's determination of what constitutes a notification under 35 U.S.C. 132. The application was filed under 35 U.S.C. 111(a) on September 30, 2005. On September 17, 2007, the Office mailed, in essence, a Notice to Comply with Requirements for Patent Applications Containing Nucleotide Sequence and/or Amino Acid Sequence Disclosures ("Notice"), notifying applicants that the sequence listing in CRF is objected to because the contents of the CRF does not comply with the requirements of 37 CFR 1.822 and/or 1.823. On August 6, 2008, the Office mailed a restriction requirement.

The Office finds the Notice mailed on September 17, 2007 is not a notification under 35 U.S.C. 132. On August 6, 2008, the Office mailed a first notification under 35 U.S.C. 132. This was fourteen months and 615 days after the filing of the application. Accordingly, a period of adjustment of 615 days will be entered for Office delay pursuant to 37 CFR 1.702(a)(1). The 291 day and the 170 day adjustments will be removed.

Patentee discloses the Office failed to enter a reduction in connection with the filing of a complete reply on October 17, 2007 to the Notice to File Missing Parts of Nonprovisional Application, mailed November 15, 2005. The Office concurs

On November 15, 2005, the Office mailed a Notice to File Missing Parts of Nonprovisional Application that required applicant to submit an executed oath or declaration, various fees, and a sequence listing. Applicant was required to provide an initial computer readable form (CRF) copy of the sequence listing, an initial paper or compact disc (CD) copy of the sequence listing, as well as an amendment directing its entry into the application. Applicant also was required to provide a statement

that the content of the sequence listing information recorded in computer readable form is identical to the written (on paper or CD) sequence listing and, where applicable, includes no new matter. On February 15, 2006 applicant filed a response.

On September 17, 2007, the Office mailed a Notice to Comply with Requirements for Patent Applications Containing Nucleotide Sequence and/or Amino Acid Sequence Disclosures, notifying applicant that a substitute CRF copy of the sequence listing, a substitute paper copy of the sequence listing, as well as an amendment directing its entry into the specification, and a statement that the paper and CFR copy of the sequence listing was the same and that there was no new matter were required.

On October 17, 2007, applicant filed a reply to the Notice to Comply in the form of a substitute paper copy of the sequence listing, a substitute CRF of the sequence listing, a statement that the content of the sequence listing information recorded in the CRF is identical to the written sequence listing and that it contains no new matter, and a supplemental prelimiinary amendment.

Patentee argues that he did not fail to engage in reasonable efforts to conclude processing or examination because applicant responded to each notice mailed within three months of the mail date of each notice.

In this instance, applicant failed to engage in reasonable efforts to conclude processing of the application by failing to completely reply to the original November 15, 2005 Notice within the three-month period provided for in 37 CFR 1.704(b). Applicant filed a partial response on February 15, 2006. Applicant did not file a complete response until October 17, 2007. It is applicant's responsibility to file complete responses to Office actions/Notices. The subsequently mailed Notice to Comply did not set forth new requirements. It merely pointed out that applicant had failed to file a complete response to the November 15, 2005 Notice.

Accordingly, the period of adjustment should have been reduced by 609 days pursuant to 37 CFR 1.704(c)(7), counting the number of days beginning on the day after the date the initial reply was filed, February 16, 2006, and ending on the date that a complete response was filed, October 17, 2007. Accordingly, a period of reduction of 609 days will be entered.

Patentee discloses the Office failed to enter a reduction for the supplemental reply filed on October 18, 2007. The Office concurs. In accordance with 37 CFR 1.704(c)(8), the period of adjustment of the term of the patent should have been reduced by 1 day counting the number of days in the period beginning on the day after the date the complete reply to the November 15, 2005 Notice was filed, October 18, 2007, and ending on the date the supplemental reply was filed, October 18, 2007. Accordingly, a period of reduction of 1 day will be entered.

In view thereof, the patent term adjustment indicated in the patent is to be corrected by issuance of a certificate of correction showing a revised Patent Term Adjustment of three hundred forty-five (345) days, which is 615 days of A delay + 411 days of B delay minus 681 (609 + 1 + 9 + 31 + 31) days of Applicant delay.

The Office acknowledges receipt of the required $200.00 fee set forth in 37 CFR 1.18(e). No additional fees are required.

The application file is being forwarded to the Certificates of Correction Branch for issuance of a certificate of correction in order to rectify this error. The Office will issue a certificate of correction indicating that the term of the above-identified patent is extended or adjusted by **three hundred forty-five (345)** days.

Telephone inquiries specific to this decision should be directed to the undersigned at (571) 272-3230.

Shirene Willis Brantley

Shirene Willis Brantley
Senior Petitions Attorney
Office of Petitions

Enclosure: Copy of DRAFT Certificate of Correction

UNITED STATES PATENT AND TRADEMARK OFFICE

CERTIFICATE OF CORRECTION

PATENT : 7,892,793 B2

DATED : **February 22, 2011** **DRAFT**

INVENTOR(S) : Xu

It is certified that error appears in the above-identified patent and that said Letters Patent is hereby corrected as shown below:

On the cover page,

[*] Notice: Subject to any disclaimer, the term of this patent is extended or adjusted under 35 U.S.C. 154(b) by 801 days

Delete the phrase "by 801 days" and insert – by 345 days--

UNITED STATES PATENT AND TRADEMARK OFFICE

Commissioner for Patents
United States Patent and Trademark Office
P.O. Box 1450
Alexandria, VA 22313-1450
www.uspto.gov

FOLEY AND LARDNER LLP
SUITE 500
3000 K STREET NW
WASHINGTON DC 20007

MAILED

JUN 16 2011

OFFICE OF PETITIONS

In re Reissue Application of
Tuomo Grohn et al.
Application No. 11/241,902
Filed: September 30, 2005
Attorney Docket No. 088245-3185

ON PETITION

This is a decision on the petition under 37 CFR 1.47(a) filed May 16, 2011, which is being treated as a petition under 37 CFR 1.183 requesting waiver of 37 CFR §§ 1.67, 1.172, and 1.175 which would require that the supplemental reissue declaration of May 16, 2011 have been executed by the inventors.[1]

The petition is **GRANTED**.

BACKGROUND

1. U.S. Patent No. 6,628,951 issued to Grohn et al. on September 30, 2003.

2. A broadening reissue application was filed for the '951 patent on September 30, 2005, and it was assigned application number 11/241,902.

3. In response to a Notice to File Missing Parts, Reissue Application 11/241,902 was filed with a REISSUE APPLICATION DECLARATION BY THE INVENTOR signed by joint inventors Grohn, Pera, Ala-Luukko and Sarkki (all of the inventors).

4. An Amendment filed October 18, 2010, in response to the Final Office Action mailed August 20, 2010, did not place the application in condition for allowance, and an Advisory Office Action was mailed March 9, 2011.

---

[1] Rule 47 only applies where, in the first instance, the signature of an originally named, or to be added, inventor can not be obtained. As both Wong and Peng executed an original reissue declaration and thus "made" the application, 37 CFR 1.47 never applied to this case. See 37 CFR 1.47; MPEP 201.03. Rather, the remedy lies under 37 CFR 1.183 when a required supplemental declaration is not executed in whole or in part by one or more previously signing inventors. See MPEP 603.

5. The Advisory Office Action noted that, in view of the amended claims, a new declaration is required.

6. The instant supplemental reissue declaration filed May 16, 2011, has been filed in response to the March 9, 2011 Advisory Action.

7. The supplemental reissue declaration is signed by joint inventors Grohn, Pera and Sarkki, and the petition purports to show that the Supplemental Reissue Declaration was forwarded to the last known address of joint inventor Ala-Luukko, but as of the filing of the petition, an executed Supplemental Declaration from had not been received.

DECISION

37 CFR 1.172 requires that a reissue declaration or oath be made (and signed) by the inventors, except as otherwise provided (37 CFR §§ 1.42, 1.43, 1.47), where the scope of the claims of the original patent is being enlarged. In addition, 37 CFR 1.175(b)(1), requires that:

> "For any error corrected, which is not covered by the oath or declaration submitted under paragraph (a) of this section, applicant must submit **a supplemental oath or declaration** stating that every such error arose without any deceptive intention on the part of the applicant." [Emphasis added]

37 CFR 1.175(b)(1), taken in conjunction with 37 CFR 1.172, requires that a supplemental oath or declaration be signed by the inventor(s). This is because all oaths or declarations necessary to fulfill the rule requirements in a reissue application are taken together collectively as a single oath or declaration. Thus, each oath and/or declaration must bear the appropriate signatures of the inventors.

In the present instance, the petition provides a sufficient showing that, while efforts have been employed to have the supplemental declaration signed by all of the inventors, those efforts have been unsuccessful. 37 CFR 1.183 permits, in an extraordinary situation, waiver of a rule which is not a requirement of the statute, where justice requires such waiver, and applicant has requested, via the present petition, a waiver of the requirement that the 37 CFR 1.175(b)(1) supplemental declaration be signed by all of the inventors.

The instant petition, via the supporting declaration of Aamir Haq, provides an appropriate and sufficient showing that despite efforts to have joint inventor Ala-Luukko sign the supplemental declaration, by his actions, joint inventor Ala-Luukko refuses to do so.

Accordingly, the rules are hereby waived to the extent that the "Supplemental Reissue Application Declaration" submitted with the present petition will be accepted as though it was signed by all of the inventors as required by 37 CFR 1.175(b)(1) taken in conjunction with § 1.172. *See In re Hayes*, 53 USPQ2d 1222 (Comm'r Pat. 1999).

CONCLUSION

1. The petition under 37 CFR 1.183 is granted to waive the rules to the extent stated in this decision.

2. The provisions of 37 CFR §§ 1.67, 1.172, and 1.175 are hereby waived to the extent that the May 16, 2011, "Supplemental Reissue Application Declaration" submitted with the present petition will be accepted as though it was signed by all of the inventors.

3. Jurisdiction over the present application is being forwarded to Technology Center 2617 for further examination.

4. Any questions regarding this decision should be directed to Senior Petitions Attorney Patricia Faison-Ball at (571) 272-3212.

/Kenneth M. Schor/

Kenneth M. Schor
Senior Legal Advisor
Office of Patent Legal Administration

6-14-11

UNITED STATES PATENT AND TRADEMARK OFFICE

UNITED STATES DEPARTMENT OF COMMERCE
United States Patent and Trademark Office
Address: COMMISSIONER FOR PATENTS
P.O. Box 1450
Alexandria, Virginia 22313-1450
www.uspto.gov

APPLICATION NO.	FILING DATE	FIRST NAMED INVENTOR	ATTORNEY DOCKET NO.	CONFIRMATION NO.
11/241,957	10/04/2005	Beat Huber	115514.02	7903

25944 7590 03/14/2011
OLIFF & BERRIDGE, PLC
P.O. BOX 320850
ALEXANDRIA, VA 22320-4850

EXAMINER
GUIDOTTI, LAURA COLE

ART UNIT	PAPER NUMBER
3727	

NOTIFICATION DATE	DELIVERY MODE
03/14/2011	ELECTRONIC

Please find below and/or attached an Office communication concerning this application or proceeding.

The time period for reply, if any, is set in the attached communication.

Notice of the Office communication was sent electronically on above-indicated "Notification Date" to the following e-mail address(es):

OfficeAction25944@oliff.com
jarmstrong@oliff.com

UNITED STATES PATENT AND TRADEMARK OFFICE

Commissioner for Patents
United States Patent and Trademark Office
P.O. Box 1450
Alexandria, VA 22313-1450
www.uspto.gov

OLIFF & BERRIDGE, PLC
P.O. BOX 320850
ALEXANDRIA VA 22320-4850

In re Application of:
HUBER, BEAT et al
Serial No.: 11/241,957
Filed: Oct. 4, 2005
Docket: 115514.02
Title: PLASTIC OBJECT FOR USE IN PERSONAL HYGIENE

DECISION ON PETITION
UNDER 37 CFR 1.91

This is a decision on the petition for request entry of exhibit filed under 37 CFR 1.91.

The petition filed on July 14, 2008 requests entry of photographs showing multiple views of the material features, filed under 37 CFR 1.91[1] and includes the required petition and the required fee as set forth in 37 CFR 1.17(h). The petition fee of $130.00 was paid in accordance with 37 CFR 1.17(h).

The request to enter the exhibit and the petition comply with the requirements as set forth in 37 CFR 1.91. Accordingly, the requested entry of the exhibit in the file record is granted. Currently, the exhibit has been placed in a separate artifact file for the examiner's consideration.

The application is being forwarded to the Publication Branch awaiting payment of issue fee. Telephone inquiries concerning this decision should be directed to Henry C. Yuen at 571-272-4856.

[1] § 1.91 Models or exhibits not generally admitted as part of application or patent. (a) A model or exhibit will not be admitted as part of the record of an application unless it: (1) Substantially conforms to the requirements of § 1.52 or § 1.84; (2) Is specifically required by the Office; or (3) Is filed with a petition under this section including: (i) The fee set forth in § 1.17(h); and (ii) An explanation of why entry of the model or exhibit in the file record is necessary to demonstrate patentability. (b) Notwithstanding the provisions of paragraph (a) of this section, a model, working model, or other physical exhibit may be required by the Office if deemed necessary for any purpose in examination of the application. (c) Unless the model or exhibit substantially conforms to the requirements of § 1.52 or § 1.84 under paragraph (a)(1) of this section, it must be accompanied by photographs that show multiple views of the material features of the model or exhibit and that substantially conform to the requirements of § 1.84.

Petition is **granted**.

Angie D. Sykes, Director
Technology Center 3700

UNITED STATES PATENT AND TRADEMARK OFFICE

UNITED STATES DEPARTMENT OF COMMERCE
United States Patent and Trademark Office
Address: COMMISSIONER FOR PATENTS
P.O. Box 1450
Alexandria, Virginia 22313-1450
www.uspto.gov

APPLICATION NO.	FILING DATE	FIRST NAMED INVENTOR	ATTORNEY DOCKET NO.	CONFIRMATION NO.
11/241,988	10/04/2005	Vincent Antoine Victor Belaiche	11298.0284-03000	6569

93377 7590 01/27/2012
RIM/FINNEGAN
901 New York Avenue NW
Washington, DC 20001

EXAMINER
SMITH, JOSHUA Y

ART UNIT	PAPER NUMBER
2477	

NOTIFICATION DATE	DELIVERY MODE
01/27/2012	ELECTRONIC

Please find below and/or attached an Office communication concerning this application or proceeding.

The time period for reply, if any, is set in the attached communication.

Notice of the Office communication was sent electronically on above-indicated "Notification Date" to the following e-mail address(es):

portfolioprosecution@rim.com
regional-desk@finnegan.com
janet.weems@finnegan.com

UNITED STATES PATENT AND TRADEMARK OFFICE

Commissioner for Patents
United States Patent and Trademark Office
P.O. Box 1450
Alexandria, VA 22313-1450
www.uspto.gov

RIM/FINNEGAN
901 New York Avenue NW
Washington DC 20001

In re Application of: BELAICHE, Vincent A. V.
Application No.: **11/241,988**
Filed: October 04, 2005
Docket No.: 11298.0284-03000
Title: METHOD FOR CONFIGURING A TELECOMMUNICATION SYSTEM

DECISION ON PETITION

UNDER 37 C.F.R. § 1.181

This is a decision on the petition filed on **December 06, 2011** under 37 CFR § 1.181(a)(3) requesting that the Examiner consider all references listed on the PTO-1449 filed with the Information Disclosure Statements (IDS) on November 01, 2010.

The petition is **DISMISSED AS MOOT**.

A review of the file of the instant application indicates that on January 06, 2012, the Office considered each of the references listed on the PTO-1449 above mentioned and that applicant was informed of such via a PTO-90C communication. Since each of those references listed on the above mentioned IDS has already been considered, this petition is rendered moot.

Accordingly, the petition is **DISMISSED AS MOOT**.

Any inquiry regarding this decision should be directed the undersigned whose telephone number is (571) 272-3902. If attempts to reach the undersigned by telephone are unsuccessful, Hassan Kizou, Quality Assurance Specialist, can be reached at (571) 272-3088.

/Beatriz Prieto/

Beatriz Prieto, Quality Assurance Specialist (QAS)
Technology Center 2400

UNITED STATES PATENT AND TRADEMARK OFFICE

Commissioner for Patents
United States Patent and Trademark Office
P.O. Box 1450
Alexandria, VA 22313-1450
www.uspto.gov

INTEL/BSTZ
BLAKELY SOKOLOFF TAYLOR & ZAFMAN LLP
1279 OAKMEAD PARKWAY
SUNNYVALE, CA 94085-4040

MAILED
AUG 27 2010
OFFICE OF PETITIONS

In re Application of
Daoqiang LU, *et al.*
Application No. 11/242,176
Filed: September 30, 2005
Attorney Docket No. **42P22595**

DECISION ON PETITION
UNDER 37 CFR 1.137(b)

This is a decision on the petition under the unintentional provisions of 37 CFR 1.137(b), filed October 21, 2008, to revive the above-identified application.

The petition is **GRANTED**.

The application became abandoned for failure to reply in a timely manner to the Restriction Requirement, mailed March 28, 2008, which set a shortened statutory period for reply of one (1) month or thirty (30) days (whichever is later). No extensions of time under the provisions of 37 CFR 1.136(a) were obtained. Accordingly, the application became abandoned on April 29, 2008.

It is not apparent whether the person signing the statement of unintentional delay was in a position to have firsthand or direct knowledge of the facts and circumstances of the delay at issue. Nevertheless, such statement is being treated as having been made as the result of a reasonable inquiry into the facts and circumstances of such delay. See 37 CFR 10.18(b) and Changes to Patent Practice and Procedure; Final Rule Notice, 62 Fed. Reg. 53131, 53178 (October 10, 1997), 1203 Off. Gaz. Pat. Office 63, 103 (October 21, 1997). In the event that such an inquiry has not been made, petitioner must make such an inquiry. If such inquiry results in the discovery that it is not correct that the entire delay in filing the required reply from the due date for the reply until the filing of a grantable petition pursuant to 37 CFR 1.137(b) was unintentional, petitioner must notify the Office.

The petition satisfies the requirements of 37 CFR 1.137(b) in that petitioner has supplied (1) the reply in the form of an election, (2) the petition fee of $1620; and (3) an adequate statement of unintentional delay.

Telephone inquiries concerning this decision should be directed to Monica A. Graves at (571) 272-7253.

This application is being referred to Technology Center AU 2892 for appropriate action by the Examiner in the normal course of business on the reply received.

Thurman K. Page
Petitions Examiner
Office of Petitions

SPE RESPONSE FOR CERTIFICATE OF CORRECTION

DATE : 09/10/11

TO SPE OF : ART UNIT 2159

SUBJECT : Request for Certificate of Correction for Appl. No.: 11242361 Patent No.: 7877379

CofC mailroom date: 08/25/11

Please respond to this request for a certificate of correction within 7 days.

FOR IFW FILES:

Please review the requested changes/corrections as shown in the **COCIN** document(s) in the IFW application image. No new matter should be introduced, nor should the scope or meaning of the claims be changed.

Please complete the response (see below) and forward the completed response to scanning using document code **COCX**.

FOR PAPER FILES:

Please review the requested changes/corrections as shown in the attached certificate of correction. Please complete this form (see below) and forward it with the file to:

Certificates of Correction Branch (CofC)
Randolph Square – 9D10-A
Palm Location 7580
You can fax the Directors/SPE response to 571-273-3421

Note: _____

_____

Lamonte Newsome

Certificates of Correction Branch

571-272-3421

Thank You For Your Assistance

The request for issuing the above-identified correction(s) is hereby:
Note your decision on the appropriate box.

- ☒ **Approved** — **All** changes apply.
- ☐ **Approved in Part** — Specify below which changes **do not** apply.
- ☐ **Denied** — State the reasons for denial below.

Comments: _____

JAMES K. TRUJILLO
SUPERVISORY PATENT EXAMINER
SPE

2159
Art Unit

UNITED STATES PATENT AND TRADEMARK OFFICE

UNITED STATES DEPARTMENT OF COMMERCE
United States Patent and Trademark Office
Address: COMMISSIONER FOR PATENTS
P.O. Box 1450
Alexandria, Virginia 22313-1450
www.uspto.gov

APPLICATION NO.	FILING DATE	FIRST NAMED INVENTOR	ATTORNEY DOCKET NO.	CONFIRMATION NO.
11/242,366	09/30/2005	Hongwu Wang	007291P033	6496

7590 11/04/2011

Daniel Ovanezian
Lowenstein Sandler PC
65 Livingston Avenue
Roseland, NJ 07068

EXAMINER
STREGE, JOHN B

ART UNIT	PAPER NUMBER
2624	

MAIL DATE	DELIVERY MODE
11/04/2011	PAPER

ACKNOWLEDGEMENT OF REQUEST

Notice of Allowance/Allowability Mailed

The request to print a color drawing reference as the first paragraph in the portion of the specification containing a brief description of the drawings as required by 37 CFR 1.84 and MPEP § 608.02 has been received by the United States Patent and Trademark Office and will be entered into the specification.

571-272-4200 or 1-888-786-0101
Application Assistance Unit
Office of Data Management

FORM PTOM327-5 (Rev. 02/08)

UNITED STATES PATENT AND TRADEMARK OFFICE

Commissioner for Patents
United States Patent and Trademark Office
P.O. Box 1450
Alexandria, VA 22313-1450
www.uspto.gov

November 4, 2011

Daniel Ovanezian
Lowenstein Sandler PC
65 Livingston Avenue
Roseland NJ 07068

In re Application of	:	
Hongwu Wang et al.	:	**DECISION ON PETITION**
Application No. 11242366	:	
Filed: 9/30/2005	:	***ACCEPTANCE OF COLOR***
Attorney Docket No. 007291P033	:	***DRAWINGS***

This is a decision on the Petition to Accept Color Drawings under 37 C.F.R 1.84 (a) (2), received in the United States Patent and Trademark Office (USPTO) September 30, 2005.

The petition is **GRANTED**.

A grantable petition under 37 C.F.R. 1.84(a) (2) must be accompanied by the following.

1. The fee set forth under 37 C.F.R. 1.17(h),
2. Three (3) sets of the color drawings in question, or (1) set if filed via EFS, and
3. The specification contains appropriate language referring to the color drawings as the first paragraph in that portion of the specification relating to the brief description of the drawings.

The petition was accompanied by all of the required fees and drawings. The specification contains the appropriate language. Therefore, the petition is GRANTED.

Telephone inquires relating to this decision may be directed to the undersigned in the Office of Data Management at 571-272-4200.

/Don Fairchild/
Office of Data Management
Publications Branch

SPE RESPONSE FOR CERTIFICATE OF CORRECTION

Paper No.: 20101027

DATE : October 26, 2010

TO SPE OF : ART UNIT 2800

SUBJECT : Request for Certificate of Correction for Appl. No.: 11242378 Patent No.: 7308361

Please respond to this request for a certificate of correction within 7 days.

FOR IFW FILES:

Please review the requested changes/corrections as shown in the **COCIN** document(s) in the IFW application image. No new matter should be introduced, nor should the scope or meaning of the claims be changed.

Please complete the response (see below) and forward the completed response to scanning using document code **COCX**.

FOR PAPER FILES:

Please review the requested changes/corrections as shown in the attached certificate of correction. Please complete this form (see below) and forward it with the file to:

Certificates of Correction Branch (CofC)
Randolph Square – 9D40-C
Palm Location 7580

Certificates of Correction Branch

703-756-1573

Thank You For Your Assistance

The request for issuing the above-identified correction(s) is hereby:
Note your decision on the appropriate box.

☒ **Approved** — **All** changes apply.

☐ **Approved in Part** — Specify below which changes **do not** apply.

☐ **Denied** — State the reasons for denial below.

Comments: _____

DREW A. DUNN
SUPERVISORY PATENT EXAMINER

SPE

2857
Art Unit

PAGE 3/3 * RCVD AT 7/29/2010 3:10:42 PM [Eastern Daylight Time] * SVR:USPTO-EFXRF-6/38 * DNIS:2709990 * CSID:5712730200 * DURATION (mm-ss):01-14

SPE RESPONSE FOR CERTIFICATE OF CORRECTION

Paper No.: _____

DATE : 03/18/10

TO SPE OF : ART UNIT 1624

SUBJECT : Request for Certificate of Correction for Appl. No.: 11242413 Patent No.: 7459448

Please respond to this request for a certificate of correction within 7 days.

FOR IFW FILES:

Please review the requested changes/corrections as shown in the **COCIN** document(s) in the IFW application image. No new matter should be introduced, nor should the scope or meaning of the claims be changed.

Please complete the response (see below) and forward the completed response to scanning using document code **COCX**.

FOR PAPER FILES:

Please review the requested changes/corrections as shown in the attached certificate of correction. Please complete this form (see below) and forward it with the file to:

Certificates of Correction Branch (C of C)
Randolph Square 9D40-D
Palm Location 7580

You can fax the Directors/SPE response to 571-270-9990

* Submitted for Scanning 7-29-10.

Lamonte Newsome
Certificates of Correction Branch
703-756-1574

Thank You For Your Assistance

The request for issuing the above-identified correction(s) is hereby:
Note your decision on the appropriate box.

- ☒ **Approved** — All changes apply.
- ☐ **Approved in Part** — Specify below which changes **do not** apply.
- ☐ **Denied** — State the reasons for denial below.

Comments: _____

SPE

1624
Art Unit

PTOL-306 (REV. 7/03) U.S. DEPARTMENT OF COMMERCE Patent and Trademark Office

07/29/2010 15:08 5712730200 PAGE 03/03

UNITED STATES PATENT AND TRADEMARK OFFICE

Commissioner for Patents
United States Patent and Trademark Office
P.O. Box 1450
Alexandria, VA 22313-1450
www.uspto.gov

ROGITZ & ASSOCIATES
750 B STREET
SUITE 3120
SAN DIEGO CA 92101

MAILED
SEP 24 2010
OFFICE OF PETITIONS

In re Application of

Hardacker, et al. :

Application No. 11/242,497

: DECISION ON PETITION

Filed: October 3, 2005

:

Attorney Docket No. 50T5721.03

This is a decision on the petition under 37 CFR 1.137(b), filed September 3, 2010, to revive the above-identified application.

The petition is **GRANTED**.

The above-cited application became abandoned for failure to reply in a timely manner to the non-final Office action mailed February 2, 2010, which set a shortened statutory period for reply of three (3) months from its mailing date. No extension of time pursuant to 37 CFR 1.136(a) was obtained within the allowable period. Accordingly, the application became abandoned on May 3, 2010. A Notice of Abandonment was mailed August 31, 2010.

The amendment filed September 3, 2010, is noted.

The application is being forwarded to Technology Center 2400, GAU 2465 for further processing.

Telephone inquiries concerning this decision should be directed to the undersigned at (571) 272-3222.

/Kenya A. McLaughlin/

Kenya A. McLaughlin
Petitions Attorney
Office of Petitions

SPE RESPONSE FOR CERTIFICATE OF CORRECTION

DATE : 10/28/10

Paper No.: _____

TO SPE OF : ART UNIT 2852

SUBJECT : Request for Certificate of Correction for Appl. No.: 11/242503 Patent No.: 7720397B2

Please respond to this request for a certificate of correction within 7 days.

FOR IFW FILES:

Please review the requested changes/corrections as shown in the **COCIN** document(s) in the IFW application image. No new matter should be introduced, nor should the scope or meaning of the claims be changed.

Please complete the response (see below) and forward the completed response to scanning using document code **COCX**.

FOR PAPER FILES:

Please review the requested changes/corrections as shown in the attached certificate of correction. Please complete this form (see below) and forward it with the file to:

Certificates of Correction Branch (CofC)
Randolph Square – 9D10-A
Palm Location 7580

Virginia Tolbert
Certificates of Correction Branch
571-272-0460

Thank You For Your Assistance

The request for issuing the above-identified correction(s) is hereby:
Note your decision on the appropriate box.

- ☒ **Approved** — All changes apply.
- ☐ **Approved in Part** — Specify below which changes **do not** apply.
- ☐ **Denied** — State the reasons for denial below.

Comments: Changes have been reviewed and approved.

/David M. Gray/ 03/07/2011

UNITED STATES PATENT AND TRADEMARK OFFICE

Commissioner for Patents
United States Patent and Trademark Office
P.O. Box 1450
Alexandria, VA 22313-1450
www.uspto.gov

HARBOR BIOSCIENCES, INC.
9191 TOWNE CENTRE DRIVE
SUITE 409
SAN DIEGO CA 92122

MAILED

NOV 04 2011

OFFICE OF PETITIONS

In re Application of
CHARLES DOWDING, ET AL.
Application No. 11/242,547
Filed: October 3, 2005
Attorney Docket No. **318.4**

DECISION ON PETITION

This is a decision on the petition under the unintentional provisions of 37 CFR 1.137(b), filed October 25, 2011, to revive the above-identified application.

There is no indication that the petition is signed by a registered patent attorney or patent agent of record. However, in accordance with 37 CFR 1.34, the signature of Daryl D. Muenchau appearing on the correspondence shall constitute a representation to the United States Patent and Trademark Office that he is authorized to represent the particular party in whose behalf he acts. If, Daryl D. Muenchau desires to be acknowledged as the attorney of record in this file, the appropriate power of attorney documents must be submitted.

This application became abandoned as a result of petitioner's failure to file an appeal brief (and fee required by 37 CFR 41.20(b)(2)) within the time period provided in 37 CFR 41.37(a)(1). As an appeal brief (and appeal brief fee) was not filed within two (2) months of the Notice of Appeal filed December 20, 2010, and no extensions of time under the provisions of 37 CFR 1.136(a) were obtained, the appeal was dismissed and the proceedings as to the rejected claims were terminated. See 37 CFR 1.197(b). As no claim was allowed, the application became abandoned on February 21, 2011. *See* MPEP 1215.04.

The petition is hereby **GRANTED**.

The petition satisfies the requirements of 37 CFR 1.137(b) in that petitioner has supplied (1) the reply in the form of a Request for Continued Examination (RCE) and fee of $465, and the submission required by 37 CFR 1.114; (2) the petition fee of $930; and (3) a proper statement of unintentional delay.

Telephone inquiries concerning this decision should be directed to the undersigned at (571) 272-4584.

This application is being referred to Technology Center AU 1618 for processing of the RCE and for appropriate action by the Examiner in the normal course of business on the amendment submitted in accordance with 37 CFR 1.114.

JoAnne Burke
Petitions Examiner
Office of Petitions

UNITED STATES PATENT AND TRADEMARK OFFICE

Commissioner for Patents
United States Patent and Trademark Office
P.O. Box 1450
Alexandria, VA 22313-1450
www.uspto.gov

DINSMORE & SHOHL LLP
FIFTH THIRD CENTER
ONE SOUTH MAIN STREET, SUITE 1300
DAYTON OH 45402

MAILED

DEC 07 2010

OFFICE OF PETITIONS

In re Application of
Yeh-Hung Lai et al.
Application No. 11/242,698
Filed: October 4, 2005
Attorney Docket No. GP-304483

: DECISION ON PETITION

This is a decision on the petition under 37 CFR 1.47(a) filed November 19, 2010, which is being treated as a petition under 37 CFR 1.183 seeking waiver of 37 CFR §§ 1.131 where it requires that an affidavit be executed by the named inventors.[1] This decision is also considered in view of the supplemental response filed November 23, 2010.

The petition filed under 37 CFR 1.183 is **DISMISSED** as involving moot issues.

Since the petition filed November 19, 2010 had not already been addressed and in view of the response filed November 23, 2010 which included the signed Declaration from Michael K. Budinski under 37 C.F.R. § 1.131, the petition will not be considered and will not receive any treatment by the USPTO.

This matter is being referred to Technology Center 1727 for examination in due course.

Telephone inquiries concerning this matter may be directed to the undersigned Petitions Attorney at (571) 272-3212.

Patricia Faison-Ball

Patricia Faison-Ball
Senior Petitions Attorney
Office of Petitions

[1] Once an application has received a fully executed oath or declaration and been placed on the files for examination, the provisions of 37 CFR 1.47 no longer apply. Rather, the remedy for treating an inventor's refusal to also sign a supplemental oath or declaration is waiver of 37 CFR 1.67. See MPEP 603.

UNITED STATES PATENT AND TRADEMARK OFFICE

Commissioner for Patents
United States Patent and Trademark Office
P.O. Box 1450
Alexandria, VA 22313-1450
www.uspto.gov

YOUNG & THOMPSON
209 MADISON STREET
SUITE 500
ALEXANDRIA VA 22314

MAILED

JUN 22 2011

OFFICE OF PETITIONS

In re Application of	:	
Dirk Westhoff et al	:	
Application No. 11/242,851	:	DECISION ON PETITION
Filed: October 5, 2005	:	UNDER 37 CFR 1.313(c)
Attorney Docket No. 8046-1052	:	

This is a decision on the petition under 37 CFR 1.313(c), filed June 21, 2011, to withdraw the above-identified application from issue after payment of the issue fee.

The petition is **GRANTED**.

The above-identified application is withdrawn from issue for consideration of a submission under 37 CFR 1.114 (request for continued examination). *See* 37 CFR 1.313(c)(2).

Petitioner is advised that the issue fee paid on June 6, 2011, cannot be refunded. If, however, this application is again allowed, petitioner may request that it be applied towards the issue fee required by the new Notice of Allowance.[1]

Telephone inquiries should be directed to the undersigned at (571) 272-3208.

This application is being referred to Technology Center AU 2433 for processing of the request for continued examination under 37 CFR 1.114 and for consideration of the concurrently filed IDS.

/Karen Creasy/
Karen Creasy
Petitions Examiner
Office of Petitions

---

[1] *The request to apply the issue fee to the new Notice may be satisfied by completing and returning the new Part B – Fee(s) Transmittal Form (along with any balance due at the time of submission). Petitioner is advised that the Issue Fee Transmittal Form* ***must*** *be completed and timely submitted to avoid abandonment of the application.*

UNITED STATES PATENT AND TRADEMARK OFFICE

UNITED STATES DEPARTMENT OF COMMERCE
United States Patent and Trademark Office
Address: COMMISSIONER FOR PATENTS
P.O. Box 1450
Alexandria, Virginia 22313-1450
www.uspto.gov

APPLICATION NO.	FILING DATE	FIRST NAMED INVENTOR	ATTORNEY DOCKET NO.	CONFIRMATION NO.
11/242,908	10/05/2005	Shinsuke Fukuda	075929-0012	9445

20277 7590 11/05/2010
MCDERMOTT WILL & EMERY LLP
600 13TH STREET, N.W.
WASHINGTON, DC 20005-3096

EXAMINER
BEST, ZACHARY P

ART UNIT	PAPER NUMBER
1727	

MAIL DATE	DELIVERY MODE
11/05/2010	PAPER

Please find below and/or attached an Office communication concerning this application or proceeding.

The time period for reply, if any, is set in the attached communication.

UNITED STATES PATENT AND TRADEMARK OFFICE

Commissioner for Patents
United States Patent and Trademark Office
P.O. Box 1450
Alexandria, VA 22313-1450
www.uspto.gov

NOV 05 2010

wk

Mailed:
In re application of :
Fukuda et al. : DECISION ON
Serial No. 11/242,908 : PETITION
Filed: 10/05/2005 :
For: DIRECT OXIDATION FUEL CELL SYSTEMS WITH REGULATED FUEL CELL STACK AND LIQUID-GAS SEPARATOR TEMPERATURES

This is a decision on a Request filed June 29, 2010, to remove additional pages that were incorrectly included in the submission of the Reply Brief.

DECISION

The request is **GRANTED.**

The images will be removed from the Official file.

/W. GARY JONES/
Director, Technology Center 1700
Chemical and Materials Engineering

Aamer S. Ahmed
MCDERMOTT WILL & EMERY LLP
600 13TH STREET, N.W.
WASHINGTON DC 20005-3096

UNITED STATES PATENT AND TRADEMARK OFFICE

Commissioner for Patents
United States Patent and Trademark Office
P.O. Box 1450
Alexandria, VA 22313-1450
www.uspto.gov

BAKER BOTTS L.L.P.
30 ROCKEFELLER PLAZA
44TH FLOOR
NEW YORK NY 10112-4498

MAILED
APR 21 2011
OFFICE OF PETITIONS

In re Application of: Jochen Krause et al.
Application No. 11/243,039
Filed: October 4, 2005
Attorney Docket No. 066340.0224

DECISION ON PETITION

This is a decision on the petition filed September 2, 2010, under the provisions of 37 CFR 1.182, requesting a "reversal of the pre-appeal conference decision dated June 1, 2010."

The petition is DISMISSED.

Applicants filed a "Pre-Appeal Brief Request for Review" (Request) on May 18, 2010 (Request) under the guidelines set forth in Pre-Appeal Brief Conference Pilot Program, 1296 Off. Gaz. Pat. Office 67 (July 12, 2005) ("OG Notice"). In a decision mailed June 1, 2010, the Office noted that the Request was not in compliance with a requirement set forth in the OG Notice.

It is clear from the record that as the number of pages in the Request was six (6), it exceeded the "five (5) or less **total** pages" (emphasis added) limit set forth section 3b of the OG Notice. Accordingly, the petition is dismissed.

Telephone inquiries related to this decision should be addressed to the undersigned at (571) –272-4914.

The decision is being forwarded to Technology Center Art Unit 1792.

Ramesh Krishnamurthy
Petitions Examiner
Office of Petitions

UNITED STATES PATENT AND TRADEMARK OFFICE

Commissioner for Patents
United States Patent and Trademark Office
P.O. Box 1450
Alexandria, VA 22313-1450
www.uspto.gov

Modjtaba Ghodoussi
P.O. Box 3991
Santa Barbara CA 93130

MAILED
MAR 27 2012
OFFICE OF PETITIONS

In re Application of
GHODOUSSI and TRUAX
Application No. 11/243,063
Filed: October 3, 2005
Attorney Docket No. MOJ-100-A

ON PETITION

This is in response to the communication submitted February 3, 2012, which is being treated as a petition under 37 CFR 1.181 to withdraw the holding of abandonment (feeless).

On June 17, 2011, the Office mailed a non-final Office action, which set a three-month shortened statutory period for reply. No extensions of the reply period were obtained pursuant to 37 CFR 1.136(a). In the absence of a timely and proper reply, the application became abandoned on September 18, 2011. The Office mailed a Notice of Abandonment on January 24, 2012.

On February 3, 2012, joint inventor, Modjtaba Ghodoussi, submitted the present communication requesting that the Office withdraw the holding of abandonment. Specifically, Mr. Ghodoussi asserted that he did not receive the non-final Office action mailed on June 17, 2011. The communication contained the typewritten name "M. Ghodoussi, PhD", but lacked any signature(s) as required by 37 CFR 1.4(d) and 1.33(b).

Initially, the Office notes that each piece of correspondence filed in an application, patent file or other proceeding in the USPTO, which requires a person's signature, such as a petition, must bear one of three types of signatures: (A) handwritten signature, (B) "S-signature" (e.g. /first and last name/), or (C) Office Electronic Filing System (EFS) character coded signature. See 37 CFR 1.4(d).

A review of the application history reveals that applicants submitted a "POWER OF ATTORNEY OR REVOCATION OF POWER OF ATTORNEY WITH A NEW POWER OF ATTORNEY AND CHANGE OF CORRESPONCE ADDRESS" (Form PTO/SB/81) on October 22, 2010, signed by both joint inventors, revoking power of attorney given to patent practitioner, Kenneth L. Stein, and changing the correspondence address to Modjtaba Ghodoussi, P.O. Box 3991, Santa Barbara, CA

93130. The Office notes that joint inventors Ghodoussi and Truax did not complete the first section of Form PTO/SB/81, and thus, did not appoint anyone to prosecute the application on their behalves.

37 CFR 1.33(b) states in pertinent part:

> Amendments and other papers, except for written assertions pursuant to § 1.27(c)(2)(ii) of this part, filed in the application must be signed by:
>
> (1) A patent practitioner of record appointed in compliance with § 1.32(b);
>
> (2) A registered attorney or agent not of record who acts in a representative capacity under the provisions of § 1.34(a);
>
> (3) An assignee as provided for under § 3.71(b) of this chapter; or
>
> (4) All of the applicants (§ 1.41(b)) for patent, unless there is an assignee of the entire interest and such assignee has taken action in the application in accordance with § 3.71 of this chapter.

The Office will recognize a power of attorney given in an application by one joint inventor to the other joint inventor to act on his behalf even though the one to whom it is given is not registered. MPEP 402; See 37 CFR 1.31 and 1.32(c)(1).

The Office records do not indicate that applicants Ghodoussi and Truax filed a power of attorney appointing a patent practitioner to prosecute the application in the present application nor did they assign their interests. Furthermore, the record does not contain a power of attorney given by Truax to Ghodoussi to act on his behalf. Therefore, all of the applicants (both Ghodoussi and Truax) must sign all papers, including any petitions, filed with the USPTO.

The Office cannot accept the present petition because it was not signed by both Ghodoussi and Truax. Consequently, the present petition is **dismissed** and will not be addressed on the merits until applicants file a petition signed by both Ghodoussi and Truax in compliance with 37 CFR 1.4(d) and 1.33(b).

Although the Office will not specifically address the merits of the petition, the Office reminds applicants that the Office file is the official record of the papers filed in this application. A review of the record does not indicate any irregularity in the mailing of the non-final Office action of June 17, 2011. In the absence of any irregularity in the mailing, there is a strong presumption that the Office action was properly mailed to the address of record. If an allegation that an Office action was never received is adequately supported by an applicant on petition, the Office may grant the petition to withdraw the holding of abandonment and remail the Office action.

As stated in Section 711.03(c)(I)(A) of the Manual for Patent Examining Procedure:

> In Delgar v. Schulyer, 172 USPQ 513 (D.D.C. 1971), the court decided that the Office should mail a new Notice of Allowance in view of the evidence presented in support of the contention that the applicant's representative did not receive the original Notice of

Allowance. Under the reasoning of Delgar, an allegation that an Office action was never received may be considered in a petition to withdraw the holding of abandonment. If adequately supported, the Office may grant the petition to withdraw the holding of abandonment and remail the Office action. That is, the reasoning of Delgar is applicable regardless of whether an application is held abandoned for failure to timely pay the issue fee (35 U.S.C. 151) or for failure to prosecute (35 U.S.C. 133).

To minimize costs and burdens to practitioners and the Office, the Office has modified the showing required to establish nonreceipt of an Office action. The showing required to establish nonreceipt of an Office communication must include a statement from the practitioner describing the system used for recording an Office action received at the correspondence address of record with the USPTO. The statement should establish that the docketing system is sufficiently reliable. It is expected that the record would include, but not be limited to, the application number, attorney docket number, the mail date of the Office action and the due date for the response.

Practitioner must state that the Office action was not received at the correspondence address of record, and that a search of the practitioner's record(s), including any file jacket or the equivalent, and the application contents, indicates that the Office action was not received. A copy of the record(s) used by the practitioner where the non-received Office action would have been entered had it been received is required.

A copy of the practitioner's record(s) required to show non-receipt of the Office action should include the master docket for the firm. That is, if a three month period for reply was set in the nonreceived Office action, a copy of the master docket report showing all replies docketed for a date three months from the mail date of the nonreceived Office action must be submitted as documentary proof of nonreceipt of the Office action. If no such master docket exists, the practitioner should so state and provide other evidence such as, but not limited to, the following: the application file jacket; incoming mail log; calendar; reminder system; or the individual docket record for the application in question.

The showing outlined above may not be sufficient if there are circumstances that point to a conclusion that the Office action may have been lost after receipt rather than a conclusion that the Office action was lost in the mail (e.g., if the practitioner has a history of not receiving Office actions).

As applicants are acting in a pro se capacity, the Office understands that they may not keep a formal docket record system ("master docket") for their correspondence with the USPTO. If no such master docket exists, applicants should so state and provide other evidence such the application file jacket; incoming mail log; calendar; reminder system; or an individual docket record for the application. Applicants must make a statement describing the system they use for recording an Office action received at the correspondence address of record with the USPTO. The statement should establish that the docketing system is sufficiently reliable. Specifically, applicants must explain their system for keeping track of patent matters - where applicants keeps the correspondence; where they write the due dates; how they know replies are due, etc. Applicants must also provide the USPTO with copies of any records or other methods, which serve as a reminder of the due date for a response to an Office

communication, and where applicants would have entered the mail date of the non-final Office action and the due date for the response had they received it. Applicants also must include statements from applicants and any other person at the address of record who may have handled the non-final Office action, indicating that a search was conducted of the applicants' record(s) and that the non-final Office action was not received. Lastly, applicants must state that they were receiving other correspondence at the address of record at the time of the mailing of the non-final Office action on June 17, 2011.

If applicants are unable to provide the information requested above, applicants may wish to file a petition to revive the application pursuant to 37 CFR 1.137(b) on the basis of unintentional delay instead of filing a "renewed" petition under 37 CFR 1.181.

A grantable petition pursuant to 37 CFR 1.137(b) must be accompanied by:

(1) The reply required to the outstanding non-final Office action;

(2) The petition fee as set forth in § 1.17(m), currently a $930.00 fee for a small entity; and,

(3) A statement that the entire delay in filing the required reply from the due date for the reply until the filing of a grantable petition was unintentional. The Director may require additional information where there is a question whether the delay was unintentional.

The appropriate form for filing a petition under 37 CFR 1.137(b) and a copy of the non-final Office action are enclosed for applicants' convenience. The Office reminds applicants that any petition, reply to the non-final Office action, or other paper filed with the USPTO must be signed by both Ghodoussi and Truax.

Further correspondence with respect to this matter should be addressed as follows:

By mail: Mail Stop Petition
Commissioner for Patents
P.O. Box 1450
Alexandria, VA 22313-1450

By FAX: (571) 273-8300
Attn: Office of Petitions

By hand: Customer Service Window
Randolph Building
401 Dulany Street
Alexandria, VA 22314

Correspondence may also be submitted electronically via EFS-Web.

Telephone inquiries related to this decision may be directed to the undersigned at (571) 272-3211.

/Christina Tartera Donnell/

Christina Tartera Donnell
Senior Petitions Attorney
Office of Petitions

Enclosures: Copy of non-final Office action and Form for Petition for Revival of an Application for Patent Abandoned Unintentionally under 37 CFR 1.137(b)

UNITED STATES PATENT AND TRADEMARK OFFICE

UNITED STATES DEPARTMENT OF COMMERCE
United States Patent and Trademark Office
Address: COMMISSIONER FOR PATENTS
P.O. Box 1450
Alexandria, Virginia 22313-1450
www.uspto.gov

APPLICATION NO.	FILING DATE	FIRST NAMED INVENTOR	ATTORNEY DOCKET NO.	CONFIRMATION NO.
11/243,063	10/03/2005	Modjtaba Ghodoussi	MOJ-100-A	9832

7590 06/17/2011

Modjtaba Ghodoussi
P.O. Box 3991
Santa Barbara, CA 93130

EXAMINER
AMIN, BHAVESH V

ART UNIT	PAPER NUMBER
3664	

MAIL DATE	DELIVERY MODE
06/17/2011	PAPER

Please find below and/or attached an Office communication concerning this application or proceeding.

The time period for reply, if any, is set in the attached communication.

Office Action Summary	Application No.	Applicant(s)	
	11/243,063	GHODOUSSI ET AL.	
	Examiner	Art Unit	
	BHAVESH V. AMIN	3664	

-- The MAILING DATE of this communication appears on the cover sheet with the correspondence address --

Period for Reply

A SHORTENED STATUTORY PERIOD FOR REPLY IS SET TO EXPIRE 3 MONTH(S) OR THIRTY (30) DAYS, WHICHEVER IS LONGER, FROM THE MAILING DATE OF THIS COMMUNICATION.

- Extensions of time may be available under the provisions of 37 CFR 1.136(a). In no event, however, may a reply be timely filed after SIX (6) MONTHS from the mailing date of this communication.
- If NO period for reply is specified above, the maximum statutory period will apply and will expire SIX (6) MONTHS from the mailing date of this communication.
- Failure to reply within the set or extended period for reply will, by statute, cause the application to become ABANDONED (35 U.S.C. § 133). Any reply received by the Office later than three months after the mailing date of this communication, even if timely filed, may reduce any earned patent term adjustment. See 37 CFR 1.704(b).

Status

1)☒ Responsive to communication(s) filed on 22 October 2010.

2a)☐ This action is **FINAL**. 2b)☒ This action is non-final.

3)☐ Since this application is in condition for allowance except for formal matters, prosecution as to the merits is closed in accordance with the practice under *Ex parte Quayle*, 1935 C.D. 11, 453 O.G. 213.

Disposition of Claims

4)☒ Claim(s) 1-20 is/are pending in the application.

4a) Of the above claim(s) _____ is/are withdrawn from consideration.

5)☐ Claim(s) _____ is/are allowed.

6)☒ Claim(s) 1-20 is/are rejected.

7)☐ Claim(s) _____ is/are objected to.

8)☐ Claim(s) _____ are subject to restriction and/or election requirement.

Application Papers

9)☐ The specification is objected to by the Examiner.

10)☐ The drawing(s) filed on _____ is/are: a)☐ accepted or b)☐ objected to by the Examiner.

Applicant may not request that any objection to the drawing(s) be held in abeyance. See 37 CFR 1.85(a).

Replacement drawing sheet(s) including the correction is required if the drawing(s) is objected to. See 37 CFR 1.121(d).

11)☐ The oath or declaration is objected to by the Examiner. Note the attached Office Action or form PTO-152.

Priority under 35 U.S.C. § 119

12)☐ Acknowledgment is made of a claim for foreign priority under 35 U.S.C. § 119(a)-(d) or (f).

a)☐ All b)☐ Some * c)☐ None of:

1.☐ Certified copies of the priority documents have been received.

2.☐ Certified copies of the priority documents have been received in Application No. _____.

3.☐ Copies of the certified copies of the priority documents have been received in this National Stage application from the International Bureau (PCT Rule 17.2(a)).

* See the attached detailed Office action for a list of the certified copies not received.

Attachment(s)

1) ☐ Notice of References Cited (PTO-892)

2) ☐ Notice of Draftsperson's Patent Drawing Review (PTO-948)

3) ☐ Information Disclosure Statement(s) (PTO/SB/08) Paper No(s)/Mail Date _____.

4) ☐ Interview Summary (PTO-413) Paper No(s)/Mail Date. _____.

5) ☐ Notice of Informal Patent Application

6) ☐ Other: _____.

DETAILED ACTION

Response to Amendment

This is in response to the petition filed on 10/22/2010, to change the power of attorney. This is a Non Final which restarts the time period for response.

Claim Rejections - 35 USC § 102

1. The following is a quotation of the appropriate paragraphs of 35 U.S.C. 102 that form the basis for the rejections under this section made in this Office action:

> A person shall be entitled to a patent unless –
>
> (b) the invention was patented or described in a printed publication in this or a foreign country or in public use or on sale in this country, more than one year prior to the date of application for patent in the United States.

2. Claims 1-20 are rejected under 35 U.S.C. 102(b) as being anticipated by Mack.

As per claims 1 and 10, Mack teaches a telerobotic system (see fig. on page 571) comprising: an input device (see fig. on page 571, particularly the surgeon console contain handle for imputing command), said input device comprising a plurality of discretely representable state configurations (see fig. on page 571, particularly the handle and end effector, that is the instrument contains a plurality of representable state configurations), said input device configured to a current one of said plurality of discretely representable state configurations, said input device further configurable to a next current one of said plurality of discretely representable state configurations (see fig. on page 571, particularly the handle and end effector, that is the instrument contains a plurality of representable state configurations, wherein each motion scaling being different from each other), wherein said current one of said plurality of discretely representable state configurations comprises a relation between the current one of said

plurality of discretely representable state configurations and a just previous current one of said plurality of discretely representable state configurations (see fig. on page 571, particularly the handle and end effector, that is the instrument contains a plurality of representable state configurations, wherein each motion scaling being different from each other which produce precise instrument's tip movements base on the surgeon's ability to control the handle); a controller for processing and transmitting data indicative of the current one of said plurality of discretely representable state configurations (see fig. on page 571, particularly the surgeon console), wherein said controller transmits said data given that said current one of said plurality of discretely representable state configurations differs said just previous current one of said plurality of discretely representable state configurations (see fig. on page 571 as noted above); and a robotic system positioned distantly said input device and in electrical communication with said controller (see fig. on page 571 as noted above), said robotic system configured to receive transmitted data indicative of said current one of said plurality of discretely representable state configurations (see fig. on page 571, wherein large hand movements translated to precise instrument tip movements).

As per claims 2 and 11, Mack teaches a robot wherein said current one of said plurality of discretely representable state configurations is generated by a user (see fig. on page 571, wherein large hand movements translated to precise instrument tip movements as noted above).

As per claim 3 and 12, Mack teaches a robot wherein said current one of said plurality of discretely representable state configurations comprises a plurality of

substates (see fig. on page 571, note that robot contains two instrument arms and one activated Endoscope arm, which being available for manipulation by the surgeon input command).

As per claims 4 and 13, Mack teaches a robot wherein said distantly positioned robotic system is configured for attachment a distantly positioned input mechanism (see fig. on page 571 as noted above).

As per claims 5 and 14, Mack teaches a robot wherein said controller ceases processing data indicative of the current one of said plurality of discretely representable state configurations if said current one of said plurality of discretely representable state configurations varies relative said just previous current one of said plurality of discretely representable state configurations (see fig. on page 571, wherein large hand movements translated to precise instrument tip movements as noted above, wherein movement varies relatively).

As per claims 6 and 15, Mack teaches a robot wherein at least one of said plurality of substates comprises a relation state between the current one of said plurality of discretely representable state configurations and a just previous current one of said plurality of discretely representable state configurations (see fig. on page 571, wherein large hand movements translated to precise instrument tip movements as noted above, wherein movement varies relatively).

As per claims 7 and 16, Mack teaches a robot wherein said relation state comprises a Boolean indicating as different the current one of said plurality of discretely representable state configurations and a just previous current one of said plurality of

discretely representable state (see table on page 570, wherein all the task and function being considered working through Boolean type of software).

As per claims 8 and 17, Mack teaches a robot wherein said controller transmits data comprising absolute position data (see fig. on page 571, wherein large hand movements translated to precise instrument tip movements as noted above, wherein movement being considered as varies by absolute data).

As per claims 9 and 20, Mack teaches a robot wherein said controller transmits data comprising relative position data (see fig. on page 571, wherein large hand movements translated to precise instrument tip movements as noted above, wherein movement varies relatively).

As per claim 18, Mack teaches a robot wherein said input mechanism is a hand controller (see fig. on page 571 particularly the handles).

As per claim 18, Mack teaches a robot wherein said hand controller is a game pad (see fig. on page 571 particularly the handles has been considered as game pad).

Response to Arguments

That address should be the last known address at which the inventor customarily receives mail. See MPEP § 605.03. Otherwise this application would have been a non-responsive. Applicant's representative has been dismissed on this application. Now, address of the invention is being provided in the last communication filed on 05/19/2009. Also, the argument regarding the prior art is not proper.

Conclusion

Any inquiry concerning this communication or earlier communications from the examiner should be directed to BHAVESH V. AMIN whose telephone number is (571)270-3255. The examiner can normally be reached on M - T, Friday off, 7:30am to 6:00pm, EST.

If attempts to reach the examiner by telephone are unsuccessful, the examiner's supervisor, Khoi Tran can be reached on 571-272-6919. The fax phone number for the organization where this application or proceeding is assigned is 571-273-8300.

Information regarding the status of an application may be obtained from the Patent Application Information Retrieval (PAIR) system. Status information for published applications may be obtained from either Private PAIR or Public PAIR. Status information for unpublished applications is available through Private PAIR only. For more information about the PAIR system, see http://pair-direct.uspto.gov. Should you have questions on access to the Private PAIR system, contact the Electronic Business Center (EBC) at 866-217-9197 (toll-free). If you would like assistance from a USPTO Customer Service Representative or access to the automated information system, call 800-786-9199 (IN USA OR CANADA) or 571-272-1000.

/BHAVESH V AMIN/
Examiner, Art Unit 3664
/KHOI TRAN/
Supervisory Patent Examiner, Art Unit 3664

SPE RESPONSE FOR CERTIFICATE OF CORRECTION

Paper No.: _____

DATE : 10/14/10

TO SPE OF : ART UNIT 1652

SUBJECT : Request for Certificate of Correction for Appl. No.: 11/243,111

Patent No.: 7,438,904

Please respond to this request for a certificate of correction within 7 days.

FOR IFW FILES: Check claims

Please review the requested changes/corrections as shown in the **COCIN** document(s) in the IFW application image. No new matter should be introduced, nor should the scope or meaning of the claims be changed.

Please complete the response (see below) and forward the completed response to scanning using document code **COCX**.

FOR PAPER FILES:

Please review the requested changes/corrections as shown in the attached certificate of correction. Please complete this form (see below) and forward it with the file to:

Certificates of Correction Branch (CofC)
Randolph Square – 9D10-A
Palm Location 7580

Thank You For Your Assistance

The request for issuing the above-identified correction(s) is hereby:

Note your decision on the appropriate box.

- ☒ **Approved** — **All** changes apply.
- ☐ **Approved in Part** — Specify below which changes **do not** apply.
- ☐ **Denied** — State the reasons for denial below.

ROBERT MONDESI
SUPERVISORY PATENT EXAMINER

SPE [signature] ART UNIT 1652

PTO/SB/131 (02-10)
Approved for use through 02/28/2011. OMB 0651-0020
U.S. Patent and Trademark Office; U. S. DEPARTMENT OF COMMERCE
Under the Paperwork Reduction Act of 1995, no persons are required to respond to a collection of information unless it displays a valid OMB control number.

REQUEST FOR RECALCULATION OF PATENT TERM ADJUSTMENT IN VIEW OF *WYETH**

Attorney Docket Number:	593458002US		
Application Number:	11/243,414-Conf. #9263	Filing Date (or 371(b) or (f) Date):	October 4, 2005
Patent Number:	7,658,546	Issue Date:	February 9, 2010
First Named Inventor:	Allen Clarke		
Title:	BEARING ASSEMBLY		

PATENTEE HEREBY REQUESTS RECALCULATION OF THE PATENT TERM ADJUSTMENT (PTA) UNDER 35 USC 154(b) INDICATED ON THE ABOVE-IDENTIFIED PATENT. THE PATENTEE'S SOLE BASIS FOR REQUESTING THE RECALCULATION IS THE USPTO'S PRE-*WYETH* INTERPRETATION OF 35 U.S.C. 154(b)(2)(A).

Note: This form is only for requesting a recalculation of PTA for patents issued before March 2, 2010, if the sole basis for requesting the recalculation is the USPTO's pre-*Wyeth* interpretation of 35 U.S.C. 154(b)(2)(A). See Instruction Sheet on page 2 for more information.

Patentees are reminded that to preserve the right to review in the United States District Court for the District of Columbia of the USPTO's patent term adjustment determination, a patentee must ensure that he or she also takes the steps required under 35 U.S.C. 154(b)(3) and (b)(4) and 37 CFR 1.705 in a timely manner.

**Wyeth v. Kappos*, No. 2009-1120 (Fed. Cir., Jan. 7, 2010).

Signature		Date	August 5, 2010
Name (Print/Typed)	Paul T. Parker	Registration Number	38,264

***Note**: Signatures of all the inventors or assignees of record of the entire interest or their representative(s) are required in accordance with 37 CFR 1.33 and 11.18. Please see 37 CFR 1.4(d) for the form of the signature. If necessary, submit multiple forms if more than one signature, see below**.*

[X] *Total of 1 forms are submitted.

UNITED STATES PATENT AND TRADEMARK OFFICE

UNITED STATES DEPARTMENT OF COMMERCE
United States Patent and Trademark Office
Address: COMMISSIONER FOR PATENTS
P.O. Box 1450
Alexandria, Virginia 22313-1450
www.uspto.gov

PERKINS COIE LLP
PATENT-SEA
P.O. BOX 1247
SEATTLE, WA 98111-1247

Mail Date: 08/16/2010

Applicant	: Allen Clarke	: DECISION ON REQUEST FOR
Patent Number	: 7658546	: RECALCULATION of PATENT
Issue Date	: 02/09/2010	: TERM ADJUSTMENT IN VIEW
Application No	: 11/243,414	: OF WYETH AND NOTICE OF INTENT TO
Filed	: 10/04/2005	: ISSUE CERTIFICATE OF CORRECTION
		:

The Request for Recalculation is **GRANTED** to the extent indicated.

The patent term adjustment has been determined to be **1081** days. The USPTO will *sua sponte* issue a certificate of correction reflecting the amount of PTA days determined by the recalculation.

Prior to the issuance of the certificate of correction, the USPTO will afford patentee an opportunity to be heard and request reconsideration. Accordingly, patentee has **one month or thirty (30) days**, whichever is longer, to file a request for reconsideration of this patent term adjustment calculation. See 35 U.S.C. 154(b)(3)(B)(ii) and 37 CFR 1.322(a)(4). No extensions of time will be granted under 37 CFR 1.136.

Patentee should use document code PET.OP if electronically filing a request for reconsideration of this patent term adjustment calculation. The patentee must also include the information required by 37 CFR 1.705(b)(2) and the fee required by 37 CFR 1.18(e). If patentee does not file a timely request for reconsideration of this patent term adjustment calculation including the information required by 37 CFR 1.705(b)(2) and the fee required by 37 CFR 1.18(e), the USPTO will issue a certificate of correction reflecting the PTA determination noted above.

Patentee should be aware that in order to preserve the right to review in the United States District Court for the District of Columbia of the USPTO patent term adjustment determination, patentee must ensure that he or she also take the steps required under 35 U.S.C. 154(b)(4)(A) in a timely manner. Nothing in the request for recalculation should be construed as providing an alternative time frame for commencing a civil action under 35 U.S.C. 154(b)(4)(A).

Any questions concerning this decision should be directed to the Office of Patent Legal Administration at 571-272-7702.

UNITED STATES PATENT AND TRADEMARK OFFICE

Commissioner for Patents
United States Patent and Trademark Office
P.O. Box 1450
Alexandria, VA 22313-1450
www.uspto.gov

KATTEN MUCHIN ROSENMAN LLP
575 MADISON AVENUE
NEW YORK, NY 10022-2585

MAILED

AUG 04 2010

OFFICE OF PETITIONS

ON PETITION

In re Patent No. 7,690,975 :
Issue Date: April 6, 2010 :
Application No. 11/243,481 :
Filed: October 4, 2005 :
Attorney Docket No. SCET 22.157 :

This is a decision on the petition filed April 23, 2010, which is being treated as a request under 37 CFR 3.81(b)[1] to correct the name of the assignee on the front page of the above-identified patent by way of a Certificate of Correction.

The request is **GRANTED**.

Inquiries concerning this decision should be directed to the April M. Wise at (571) 272-1642. Any questions concerning the issuance of a certificate of correction should be directed to the Certificates of Correction Branch at (571) 272-4200.

This matter is being referred to the Certificates of Correction Branch for processing of a certificate of correction after issuance of this application into a patent.

/Carl Friedman/
Carl Friedman
Petitions Examiner
Office of Petitions

[1] *See* MPEP 1309, subsection II; and Official Gazette of June 22, 2004.

UNITED STATES PATENT AND TRADEMARK OFFICE

Commissioner for Patents
United States Patent and Trademark Office
P.O. Box 1450
Alexandria, VA 22313-1450
www.uspto.gov

STOEL RIVES LLP - SLC
201 SOUTH MAIN STREET, SUITE 1100
ONE UTAH CENTER
SALT LAKE CITY UT 84111

MAILED

APR 15 2011

OFFICE OF PETITIONS

In re Application of	:	
Wayne A. CASE et al.	:	
Application No. 11/243,541	:	DECISION ON PETITION
Filed: October 05, 2005	:	
Attorney Docket No. 60492/10	:	

This is a decision on the petition under the unintentional provisions of 37 CFR 1.137(b), filed February 07, 2011, to revive the above-identified application.

The petition is **GRANTED**.

The application became abandoned for failure to reply in a timely manner to the non-final Office action mailed, August 07, 2009 which set a shortened statutory period for reply of three (3) months. No extensions of time under the provisions of 37 CFR 1.136(a) were obtained. Accordingly, the application became abandoned on November 08, 2009.

The petition satisfies the requirements of 37 CFR 1.137(b) in that petitioner has supplied (1) the reply in the form of an amendment, (2) the petition fee of 1,620.00, and (3) a proper statement of unintentional delay. Accordingly, the reply to the non-final Office action of August 07, 2009 is accepted as having been unintentionally delayed.

Telephone inquiries concerning this decision should be directed to the undersigned at (571) 272 4231.

This application is being referred to Technology Center AU 1797 for appropriate action by the Examiner in the normal course of business on the reply received.

Michelle R. Eason

Michelle R. Eason
Paralegal Specialist
Office of Petitions

UNITED STATES PATENT AND TRADEMARK OFFICE

Commissioner for Patents
United States Patent and Trademark Office
P.O. Box 1450
Alexandria, VA 22313-1450
www.uspto.gov

Office of Patent Counsel
Schlumberger Oilfield Services
200 Gillingham Lane
Sugar Land TX 77478

MAILED
DEC 06 2010
OFFICE OF PETITIONS

In re Application of	:	
Richard Saenger	:	
Application No. 11/243,575	:	DECISION ON PETITION
Filed: October 5, 2005	:	
Attorney Docket No. 21.1257	:	

This is a decision on the petition under the unintentional provisions of 37 CFR 1.137(b), filed November 8, 2010, to revive the above-identified application.

The petition is **GRANTED**.

This application became abandoned for failure to timely pay the issue and publication fees on or before October 12, 2010, as required by the Notice of Allowance and Fee(s) Due, mailed July 9, 2010. Accordingly, the date of abandonment of this application is October 13, 2010. The Notice of Abandonment was mailed October 22, 2010.

The petition satisfies the requirements of 37 CFR 1.137(b) in that petitioner has supplied (1) the reply in the form of payment of the issue fee of $1,510 and the publication fee of $300, (2) the petition fee of $1,620; and (3) a proper statement of unintentional delay.

It is not apparent whether the person signing the statement of unintentional delay was in a position to have firsthand or direct knowledge of the facts and circumstances of the delay at issue. Nevertheless, such statement is being treated as having been made as the result of a reasonable inquiry into the facts and circumstances of such delay. See 37 CFR 10.18(b) and Changes to Patent Practice and Procedure; Final Rule Notice, 62 Fed. Reg. 53131, 53178 (October 10, 1997), 1203 Off. Gaz. Pat. Office 63, 103 (October 21, 1997). In the event that such an inquiry has not been made, petitioner must make such an inquiry. If such inquiry results in the discovery that it is not correct that the entire delay in filing the required reply from the due date for the reply until the filing of a grantable petition pursuant to 37 CFR 1.137(b) was unintentional, petitioner must notify the Office.

Telephone inquiries concerning this decision should be directed to Terri Johnson at (571) 272-2991.

This application is being referred to Office of Data Management for processing into a patent.

/Terri Johnson/
Terri Johnson
Petitions Examiner
Office of Petitions

UNITED STATES PATENT AND TRADEMARK OFFICE

UNITED STATES DEPARTMENT OF COMMERCE
United States Patent and Trademark Office
Address: COMMISSIONER FOR PATENTS
P.O. Box 1450
Alexandria, Virginia 22313-1450
www.uspto.gov

APPLICATION NO.	FILING DATE	FIRST NAMED INVENTOR	ATTORNEY DOCKET NO.	CONFIRMATION NO.
11/243,725	10/05/2005	Loic M. Dejardin	MSU-09546	2198

7590 06/21/2011
Oakland Law Group, PLLC
38955 Hills Tech Drive
Farmington Hills, MI 48331

EXAMINER
BECCIA, CHRISTOPHER J

ART UNIT	PAPER NUMBER
3775	

MAIL DATE	DELIVERY MODE
06/21/2011	PAPER

Please find below and/or attached an Office communication concerning this application or proceeding.

The time period for reply, if any, is set in the attached communication.

UNITED STATES DEPARTMENT OF COMMERCE
U.S. Patent and Trademark Office
Address: COMMISSIONER FOR PATENTS
P.O. Box 1450
Alexandria, Virginia 22313-1450

APPLICATION NO./ CONTROL NO.	FILING DATE	FIRST NAMED INVENTOR / PATENT IN REEXAMINATION	ATTORNEY DOCKET NO.
11243725	10/5/2005	DEJARDIN, LOIC M.	MSU-09546

EXAMINER
CHRISTOPHER BECCIA

ART UNIT	PAPER
3775	20110330

DATE MAILED:

Oakland Law Group, PLLC
38955 Hills Tech Drive
Farmington Hills, MI 48331

Please find below and/or attached an Office communication concerning this application or proceeding.

Commissioner for Patents

This is a decision on the petition under 37 C.F.R. 1.84(a)(2), filed May 8, 2009, requesting acceptance of color drawings. The petition requests that all the drawings, which are in color, be accepted in lieu of black and white drawings.

Applicants have requested that the Office accept the color drawings filed on May 8, 2009, for the above-referenced utility patent application. Applicants have maintained that color drawings are superior as compared to black and white images in projecting detail and contrast of certain structures of the subject matter sought to be patented.

It appears that the subject matter of the drawings can be represented as well without resorting to the use of color drawings. Hence, the petition is denied.

/Thomas C. Barrett/
Supervisory Patent Examiner, Art Unit 3775

/CHRISTOPHER BECCIA/
Examiner, Art Unit 3775

UNITED STATES PATENT AND TRADEMARK OFFICE

Commissioner for Patents
United States Patent and Trademark Office
P.O. Box 1450
Alexandria, VA 22313-1450
www.uspto.gov

THE H.T. THAN LAW GROUP
WATERFRONT CENTER SUITE 560
1010 WISCONSIN AVENUE NW
WASHINGTON, DC 20007

MAILED

SEP 14 2010

OFFICE OF PETITIONS

In re Application of	:
Curello et al.	:
Application No. 11/243,766	: DECISION GRANTING PETITION
Filed: October 5, 2005	: UNDER 37 CFR 1.78(a)(3)
Attorney Docket No. BIC-039	:

This is a decision on the petition under 37 CFR 1.78(a)(3), filed April 29, 2010, to accept an unintentionally delayed claim under 35 U.S.C. § 120 for the benefit of priority to prior-filed nonprovisional Application No. 10/725,237, filed December 1, 2003, set forth in the amendment filed concurrently with the instant petition.

The petition is **GRANTED**.

A petition for acceptance of a claim for late priority under 37 CFR 1.78(a)(3) is only applicable to those applications filed on or after November 29, 2000. Further, the petition is appropriate only after the expiration of the period specified in 37 CFR 1.78(a)(2)(ii). In addition, the petition under 37 CFR 1.78(a)(3) must be accompanied by:

(1) the reference required by 35 U.S.C. § 120 and 37 CFR 1.78(a)(2)(i) of the prior-filed application, unless previously submitted;
(2) the surcharge set forth in § 1.17(t); and
(3) a statement that the entire delay between the date the claim was due under 37 CFR 1.78(a)(2)(ii) and the date the claim was filed was unintentional. The Commissioner may require additional information where there is a question whether the delay was unintentional.

The instant nonprovisional application was filed after November 29, 2000, and the claim herein for the benefit of priority to the prior-filed provisional application is submitted after expiration of the period specified by 37 CFR 1.78(a)(2)(ii). Therefore, this is a proper petition under 37 CFR 1.78(a)(3).

The petition complies with the requirements for a grantable petition under 37 CFR 1.78(a)(3) in that (1) a reference to the above-noted, prior-filed nonprovisional application has been included in an amendment to the first sentence of the specification following the title, as provided by 37 CFR 1.78(a)(2)(iii); (2) the surcharge fee required by 37 CFR 1.17(t) has been submitted; and (3) the petition contains a proper statement of unintentional delay. Accordingly, having found that the instant petition for acceptance of an unintentionally delayed claim for the benefit of priority under 35 U.S.C. § 120 to the above-noted, prior-filed nonprovisional application satisfies the conditions of 37 CFR 1.78(a)(3), the petition is granted.

The granting of the petition to accept the delayed benefit claim to the prior-filed application under 37 CFR 1.78(a)(3) should not be construed as meaning that the instant application is entitled to the benefit of the prior-filed application. In order for the instant application to be entitled to the benefit of the prior-filed application, all other requirements under 35 U.S.C. § 120 and 37 CFR 1.78(a)(1) and (a)(2) must be met. Similarly, the fact that the corrected Filing Receipt accompanying this decision on petition includes the prior-filed applications should not be construed as meaning that applicant is entitled to the claim for benefit of priority to the prior-filed application noted thereon. Accordingly, the examiner will, in due course, consider this benefit claim and determine whether the instant application is entitled to the benefit of the earlier filing date.

A corrected Filing Receipt, which includes the priority claim to the prior-filed nonprovisional application, accompanies this decision on petition.

Any inquiries concerning this decision may be directed to Alicia Kelley at (571) 272-6059.

This matter is being referred to Technology Center Art Unit 1795 for appropriate action on the amendment filed April 29, 2010, including consideration by the examiner of applicant's entitlement to claim benefit of priority under 35 U.S.C. § 120 to the prior-filed nonprovisional application.

/Liana Walsh/
Liana Walsh
Petitions Examiner
Office of Petitions

ATTACHMENT: Corrected Filing Receipt

UNITED STATES PATENT AND TRADEMARK OFFICE

UNITED STATES DEPARTMENT OF COMMERCE
United States Patent and Trademark Office
Address: COMMISSIONER FOR PATENTS
P.O. Box 1450
Alexandria, Virginia 22313-1450
www.uspto.gov

APPLICATION NUMBER	FILING or 371(c) DATE	GRP ART UNIT	FIL FEE REC'D	ATTY.DOCKET.NO	TOT CLAIMS	IND CLAIMS
11/243,766	10/05/2005	1797	1130	BIC-039	16	1

CONFIRMATION NO. 9036

CORRECTED FILING RECEIPT

29626
THE H.T. THAN LAW GROUP
WATERFRONT CENTER SUITE 560
1010 WISCONSIN AVENUE NW
WASHINGTON, DC 20007

OC000000043470020

Date Mailed: 09/14/2010

Receipt is acknowledged of this non-provisional patent application. The application will be taken up for examination in due course. Applicant will be notified as to the results of the examination. Any correspondence concerning the application must include the following identification information: the U.S. APPLICATION NUMBER, FILING DATE, NAME OF APPLICANT, and TITLE OF INVENTION. Fees transmitted by check or draft are subject to collection. Please verify the accuracy of the data presented on this receipt. **If an error is noted on this Filing Receipt, please submit a written request for a Filing Receipt Correction. Please provide a copy of this Filing Receipt with the changes noted thereon. If you received a "Notice to File Missing Parts" for this application, please submit any corrections to this Filing Receipt with your reply to the Notice. When the USPTO processes the reply to the Notice, the USPTO will generate another Filing Receipt incorporating the requested corrections**

Applicant(s)

Andrew J. Curello, Hamden, CT;
Constance R. Stepan, Oxford, CT;

Power of Attorney: The patent practitioners associated with Customer Number 29626

Domestic Priority data as claimed by applicant

This application is a CIP of 10/725,237 12/01/2003 PAT 7,655,331

Foreign Applications

If Required, Foreign Filing License Granted: 10/24/2005

The country code and number of your priority application, to be used for filing abroad under the Paris Convention, is **US 11/243,766**

Projected Publication Date: Not Applicable

Non-Publication Request: No

Early Publication Request: No

Title

Scavenger materials in fuel cartridge

Preliminary Class

044

PROTECTING YOUR INVENTION OUTSIDE THE UNITED STATES

Since the rights granted by a U.S. patent extend only throughout the territory of the United States and have no effect in a foreign country, an inventor who wishes patent protection in another country must apply for a patent in a specific country or in regional patent offices. Applicants may wish to consider the filing of an international application under the Patent Cooperation Treaty (PCT). An international (PCT) application generally has the same effect as a regular national patent application in each PCT-member country. The PCT process **simplifies** the filing of patent applications on the same invention in member countries, but **does not result** in a grant of "an international patent" and does not eliminate the need of applicants to file additional documents and fees in countries where patent protection is desired.

Almost every country has its own patent law, and a person desiring a patent in a particular country must make an application for patent in that country in accordance with its particular laws. Since the laws of many countries differ in various respects from the patent law of the United States, applicants are advised to seek guidance from specific foreign countries to ensure that patent rights are not lost prematurely.

Applicants also are advised that in the case of inventions made in the United States, the Director of the USPTO must issue a license before applicants can apply for a patent in a foreign country. The filing of a U.S. patent application serves as a request for a foreign filing license. The application's filing receipt contains further information and guidance as to the status of applicant's license for foreign filing.

Applicants may wish to consult the USPTO booklet, "General Information Concerning Patents" (specifically, the section entitled "Treaties and Foreign Patents") for more information on timeframes and deadlines for filing foreign patent applications. The guide is available either by contacting the USPTO Contact Center at 800-786-9199, or it can be viewed on the USPTO website at http://www.uspto.gov/web/offices/pac/doc/general/index.html.

For information on preventing theft of your intellectual property (patents, trademarks and copyrights), you may wish to consult the U.S. Government website, http://www.stopfakes.gov. Part of a Department of Commerce initiative, this website includes self-help "toolkits" giving innovators guidance on how to protect intellectual property in specific countries such as China, Korea and Mexico. For questions regarding patent enforcement issues, applicants may call the U.S. Government hotline at 1-866-999-HALT (1-866-999-4158).

LICENSE FOR FOREIGN FILING UNDER

Title 35, United States Code, Section 184

Title 37, Code of Federal Regulations, 5.11 & 5.15

GRANTED

The applicant has been granted a license under 35 U.S.C. 184, if the phrase "IF REQUIRED, FOREIGN FILING LICENSE GRANTED" followed by a date appears on this form. Such licenses are issued in all applications where the conditions for issuance of a license have been met, regardless of whether or not a license may be required as

set forth in 37 CFR 5.15. The scope and limitations of this license are set forth in 37 CFR 5.15(a) unless an earlier license has been issued under 37 CFR 5.15(b). The license is subject to revocation upon written notification. The date indicated is the effective date of the license, unless an earlier license of similar scope has been granted under 37 CFR 5.13 or 5.14.

This license is to be retained by the licensee and may be used at any time on or after the effective date thereof unless it is revoked. This license is automatically transferred to any related applications(s) filed under 37 CFR 1.53(d). This license is not retroactive.

The grant of a license does not in any way lessen the responsibility of a licensee for the security of the subject matter as imposed by any Government contract or the provisions of existing laws relating to espionage and the national security or the export of technical data. Licensees should apprise themselves of current regulations especially with respect to certain countries, of other agencies, particularly the Office of Defense Trade Controls, Department of State (with respect to Arms, Munitions and Implements of War (22 CFR 121-128)); the Bureau of Industry and Security, Department of Commerce (15 CFR parts 730-774); the Office of Foreign AssetsControl, Department of Treasury (31 CFR Parts 500+) and the Department of Energy.

NOT GRANTED

No license under 35 U.S.C. 184 has been granted at this time, if the phrase "IF REQUIRED, FOREIGN FILING LICENSE GRANTED" DOES NOT appear on this form. Applicant may still petition for a license under 37 CFR 5.12, if a license is desired before the expiration of 6 months from the filing date of the application. If 6 months has lapsed from the filing date of this application and the licensee has not received any indication of a secrecy order under 35 U.S.C. 181, the licensee may foreign file the application pursuant to 37 CFR 5.15(b).

UNITED STATES PATENT AND TRADEMARK OFFICE

Commissioner for Patents
United States Patent and Trademark Office
P.O. Box 1450
Alexandria, VA 22313-1450
www.uspto.gov

Yanming Wang
203 Summer Street
Malden MA 02148

MAILED
JAN 31 2011
OFFICE OF PETITIONS

In re Application of	:	
Yanming Wang	:	
Application No. 11/243,875	:	DECISION ON PETITION
Filed: October 5, 2005	:	
Attorney Docket No.	:	

This is a decision on the communication, filed June 30, 2010, which is being treated as a petition under 37 CFR 1.181 (no fee) requesting withdrawal of the holding of abandonment in the above-identified application.

The petition is **DISMISSED**.

Any request for reconsideration of this decision should be submitted within two (2) months from the mail date of this decision and be entitled "Renewed Petition to Withdraw the Holding of Abandonment under 37 CFR 1.181." *See* 37 CFR 1.181(f).

This application was held abandoned for failure to reply to the final Office action of August 17, 2009, which set a three (3) months shortened statutory period for reply. A Notice of Abandonment was mailed on March 10, 2010.

DISCUSSION OF PETITION TO WITHDRAW THE HOLDING OF ABANDONMENT

Petitioner contends that the Notice of Abandonment was mailed in error since a timely reply was received by the office on October 12, 2009. Petitioner indicates that a reply was submitted on October 12, 2009, that included an RCE and fee thereof. A review of the Office records indicates that a fee for the RCE was indeed received on October 16, 2009. However, the evidence of the previously filed response included with the petition reveals that petitioner inadvertently failed to sign the RCE transmittal or the Amendment. An unsigned amendment (or other paper) or one not properly signed by a person having authority to prosecute the application is not entered. Therefore, since the Office is considering these papers as being the Original papers filed on October 12, 2009, and they were not signed, the Office cannot accept these papers submitted with the instant petition as being timely filed. Thus, a complete reply to the final Office action has not been timely received by the Office. Accordingly, the application was abandoned properly and the requested relief of withdrawing the holding of abandonment cannot be granted.

ALTERNATIVE VENUE

Petitioner is strongly encouraged to consider filing a petition under 37 CFR 1.137(b) to revive an unintentionally abandoned application instead of filing a renewed petition under 37 CFR 1.181 or a petition under 37 CFR 1.137(a).

A grantable petition pursuant to 37 CFR 1.137(b) must be accompanied by:

(1) The reply required to the outstanding Office action or notice, unless previously filed. In nonprovisional utility application abandoned for failure to respond to a non-final Office action, the required reply may be met by filing either (A) an argument or amendment under 37 CFR 1.111 or (B) a continuing application under 37 CFR 1.53(b).

(2) The petition fee as set forth in 37 CFR 1.17(m), **$810 for a small entity;**

(3) A statement that the entire delay in filing the required reply from the due date for the reply until the filing of a grantable petition was unintentional. The Director may require additional information where there is a question whether the delay was unintentional.

A form for filing a petition to revive an unintentionally abandoned application accompanies this decision for petitioner's convenience. If petitioner desires to file a petition under 37 CFR 1.137(b) instead of filing a request for reconsideration, petitioner must complete the enclosed petition form (PTO/SB/64) and pay the appropriate petition fee. In filing a petition under 37 CFR .137(b), petitioner is advised to include signed copies of the RCE transmittal and the Amendment.

Petitioner may wish to consider hiring a registered patent attorney or agent to assist in the prosecution of this application. Additionally, petitioner is encouraged to contact the Inventors Assistance Center (IAC) by telephone at 800-786-9199 or 571-272-1000, Monday through Friday from 8:30 AM to 5:30 PM (EST). The IAC provides patent information and services to the public and is staffed by former Supervisory Patent Examiners and experienced Primary Examiners who answer general questions concerning patent examining policy and procedure.

Further correspondence with respect to this matter should be addressed as follows:

By mail: Mail Stop Petition
Commissioner for Patents
P.O. Box 1450
Alexandria, VA 22313-1450

By FAX: (571) 273-8300
Attn: Office of Petitions

By hand: Customer Service Window
Randolph Building
401 Dulany Street
Alexandria, VA 22314

Telephone inquiries related to this decision may be directed to the JoAnne Burke at (571) 272-4584.

Ramesh Krishnamurthy
Petitions Examiner
Office of Petitions

Enclosures: Petition For Revival Of An Application For Patent Abandoned Unintentionally Under 37 CFR 1.137(b); Form PTO/SB/64, Privacy Act Statement

SPE RESPONSE FOR CERTIFICATE OF CORRECTION

DATE : 02/26/12

TO SPE OF : ART UNIT 3764

SUBJECT : Request for Certificate of Correction for Appl. No.: 11243891 Patent No.: 8062185

CofC mailroom date: 02/14/12

Please respond to this request for a certificate of correction within 7 days.

FOR IFW FILES:

Please review the requested changes/corrections as shown in the **COCIN** document(s) in the IFW application image. No new matter should be introduced, nor should the scope or meaning of the claims be changed.

Please complete the response (see below) and forward the completed response to scanning using document code **COCX**.

FOR PAPER FILES:

Please review the requested changes/corrections as shown in the attached certificate of correction. Please complete this form (see below) and forward it with the file to:

Certificates of Correction Branch (CofC)
Randolph Square – 9D10-A
Palm Location 7580
[redacted]

Note: **Should the Related U.S. Application Data be added?**

Lamonte Newsome

Certificates of Correction Branch

571-272-3421

Thank You For Your Assistance

The request for issuing the above-identified correction(s) is hereby:

Note your decision on the appropriate box.

SPE RESPONSE FOR CERTIFICATE OF CORRECTION

☐ **Approved** — **All** changes apply.

X Approved in Part — Specify below which changes **do not** apply.

☐ **Denied** — State the reasons for denial below.

Comments: Provisional application No. 60/337,498 filed 11/13/2001

Should be inserted. "2001 " is redundant.

/LoAn H. Thanh/ 3764

SPE **Art Unit**

UNITED STATES PATENT AND TRADEMARK OFFICE

Commissioner for Patents
United States Patent and Trademark Office
P.O. Box 1450
Alexandria, VA 22313-1450
www.uspto.gov

HARNESS, DICKEY & PIERCE, P.L.C.
P.O. BOX 8910
RESTON VA 20195

MAILED

NOV 15 2010

OFFICE OF PETITIONS

In re Application of	:	
Seung Wook Park et al	:	
Application No. 11/243,991	:	DECISION GRANTING PETITION
Filed: October 6, 2005	:	UNDER 37 CFR 1.313(c)(3)
Attorney Docket No. 46500-000521/US/01	:	

This is a decision on the petition, filed November 11, 2010, under 37 CFR 1.313(c)(3) to withdraw the above-identified application from issue after payment of the issue fee.

The petition is **GRANTED**.

Petitioner requests that the above-identified application be withdrawn from issue for express abandonment. *See* 37 CFR 1.313(c)(3).

The application is hereby withdrawn from issue, and the abandonment is hereby recognized.

Telephone inquiries should be directed to the undersigned at (571) 272-3208.

/KOC/
Karen Creasy
Petitions Examiner
Office of Petitions

UNITED STATES PATENT AND TRADEMARK OFFICE

Commissioner for Patents
United States Patent and Trademark Office
P.O. Box 1450
Alexandria, VA 22313-1450
www.uspto.gov

THE WEBB LAW FIRM, P.C.
ONE GATEWAY CENTER
420 FT. DUQUESNE BLVD, SUITE 1200
PITTSBURGH PA 15222

MAILED

FEB 07 2012

OFFICE OF PETITIONS

In re Application
Bryan St. Onge et al.
Application No. 11/244,123
Filed: October 5, 2005
Attorney Docket No. **4027-053051**

: DECISION ON APPLICATION
: FOR PATENT TERM ADJUSTMENT

This is in response to the REQUEST FOR RECONSIDERATION OF PATENT TERM ADJUSTMENT UNDER 37 C.F.R. §1.705(b) filed January 16, 2012. Applicant requests that the determination of patent term adjustment be corrected from 203 days to 566 days. Applicant requests this correction in part on the basis that the Office will take in excess of three years to issue this patent and is being considered in light of the Court of Appeals for the Federal Circuit's decision in *Wyeth v. Kappos*, 2009-1120 (Fed. Cir. 1-7-2010) as well as in the decision in *ArQule v. Kappos*, _F.Supp.2d _(D.D.C. 2011).

To the extent that this application for patent term adjustment requests reconsideration of the patent term adjustment as it relates to the Office's failure to issue the patent within 3 years of the filing date, the application for patent term adjustment under 37 CFR 1.705(b) is **DISMISSED as PREMATURE**.

Knowledge of the actual date the patent issues is required to calculate the amount, if any, of additional patent term patentees are entitled to for Office failure to issue the patent within three years. See 37 CFR 1.702(b). (This is true even where a request for continued examination (RCE) was filed). The computer will not undertake the § 1.702(b) calculation until the actual date of issuance of the patent has been determined. Likewise, the computer will not calculate any further Office delay under 37 CFR 1.702(a)(4) or applicant delay under 37 CFR 1.704(c)(10) until the actual date of issuance of the patent has been determined. As such, the Office cannot make a determination on the correctness of the patent term adjustment until the patent has issued.

Requesting reconsideration of the patent term adjustment to be indicated on the patent under 37 CFR 1.705(b) based on the initial determination of patent term adjustment and a projected issuance date of the patent (or even the filing date of the request for continued examination) is premature. Accordingly, it is appropriate to dismiss such a request as premature.

With respect to the over 3 year calculation, rather than file an application for patent term adjustment under 37 CFR 1.705(b) contesting the 37 CFR 1.702(b) calculation at the time of the mailing of the notice of allowance, applicants are advised that they may wait until the time of the issuance of the patent and file a request for reconsideration of the patent term adjustment pursuant to 37 CFR 1.705(d). As the USPTO does not calculate the amount of time earned pursuant to 37 CFR 1.702(b) until the time of the issuance of the patent, the Office will consider any request for reconsideration of the patent term adjustment due to an error in the calculation of 37 CFR 1.702(b) to be timely if the request for reconsideration is filed within two months of the issuance of the patent. However, as to all other bases for contesting the initial determination of patent term adjustment received with the notice of allowance, applicants must timely file an application for patent term adjustment prior to the payment of the issue fee.

To the extent that applicant otherwise requests correction of the patent term adjustment at the time of the mailing of the Notice of Allowance, the application for patent term adjustment is **GRANTED** to the extent indicated herein.

On October 17, 2011, the Office mailed the Determination of Patent Term Adjustment under 35 U.S.C. 154(b) in the above-identified application. The Notice stated that the patent term adjustment to date is 203 days. The instant application for patent term adjustment was timely filed[1] on or before payment of the issue fee.

Applicants dispute the reduction of 88 days for the response filed May 5, 2010. "Applicants note that the start of the period outside the 3-months provided by 35 U.S.C. §154(b) normally would be February 6, 20I0, however, February 6, 2010 was a Saturday, February 7, 2010 was a Sunday, and February 8, 2010 through February 11, 2010 was a holiday due to Office Closures, February 12, 2010 was the next business day after the due date. In Arqule v. Kappos, _ F.Supp.2d _ (D.D.C. 2011), the District Court of the District of Columbia ruled that the 35 U.S.C. § 21 (b) "weekend add holiday" exception applies to "any action" including the § 154(b)(2)(C) Accordingly, because February 6, 20I0, however, February 6, 2010 was a Saturday, February 7, 2010 was a Sunday, and February 8, 2010 through February 11, 2010 was a holiday due to Office Closures, the time period to calculate Applicant delay commenced on February 12, 2010 rather than Februar 6, 2010. Therefore, a delay of 88 days was accrued, corresponding to the time period between February 6, 2010 (three months after the mailing date of the Office Action, in accordance with 37 CFR §1.704(b)) and May 5, 2010. Applicants note that the calculation of 82 days is in disagreement with the calculation of 88 days made by the Office. Thus, Applicants respectfully request the Office to correct the Applicant delay from 88 days to 82 days.

[1] PALM records indicate that the issue fee was paid on January 17, 2012.

The reduction is being reconsidered and, based upon the decision in the Arqule case, it is determined that entry of a reduction for this reply timely filed pursuant to 35 U.S.C. §21(b) is not warranted. Accordingly, the period of reduction of 88 days is being removed.

Thus, instead of an 88 day reduction for applicant delay pursuant to 37 C.F.R. §1.704(b), 82 days should have been accorded for applicant delay.

In view thereof, the determination of Patent Term Adjustment at the time of the mailing of the notice of allowance should have been 209 days (652 days of Office delay reduced by 443 days of applicant delay, rather than 449 days).

The Office of Data Management has been advised of this decision. The application is, thereby, forwarded to the Office of Data Management for issuance of the application. The patent term adjustment indicated on the patent (as shown on the Issue Notification mailed about three weeks prior to patent issuance) will include any additional adjustment accrued both for Office delay in issuing the patent more than four months after payment of the issue fee and satisfaction of all outstanding requirements, and for the Office taking in excess of three years to issue the patent (to the extent that the three-year period does not overlap with periods already accorded).

Telephone inquiries specific to this decision should be directed to Senior Petitions Attorney Patricia Faison-Ball at (571) 272-3212.

Patricia Faison-Ball

Patricia Faison-Ball
Senior Petitions Attorney
Office of Petitions

Enclosure: Copy of Revised PALM Screen

Patent Term Adjustments

PTA/PTE Information | Patent Term Adjustment | Patent Term Extension

Application Number*: 11244123 Search Explanation of PTA Calculation Explanation of PTE Calculation

PTA Calculations for Application: 11244123

Application Filing Date	10/05/2005	OverLapping Days Between (A and B) or (A and C)	0
Issue Date of Patent		Non-Overlapping USPTO Delays:	652
A Delays	652	PTO Manual Adjustment	6
B Delays	0	Applicant Delay (APPL)	449
C Delays	0	Total PTA (days)	209

* - Sorted Column

File Contents History

Action Number	Action Recorded Date	Action Due Date	Action Code	Action Description	Duration PTO	Duration APPL	Parent Action Number
169	02/05/2012		P028	Adjustment of PTA Calculation by PTO		82	0
168	02/05/2012		P028	Adjustment of PTA Calculation by PTO	88		0
151	10/17/2011		MN/=.	Mail Notice of Allowance			0
150	10/12/2011		OAR	Office Action Review			0
149	10/12/2011		OAR	Office Action Review			0
148	10/12/2011		OAR	Office Action Review			0
147	10/12/2011		OAR	Office Action Review			0
146	10/12/2011		IREV	Issue Revision Completed			0
145	10/12/2011		DVER	Document Verification			0
144	10/12/2011		N/=.	Notice of Allowance Data Verification Completed			0
142	10/11/2011		EX.R	Reasons for Allowance			0
141	10/11/2011		EX.A	Examiner's Amendment Communication			0
140	10/11/2011		CNTA	Allowability Notice			0
143	10/10/2011		EXIE	Interview Summary - Examiner Initiated			0
138	09/02/2011		IDSC	Information Disclosure Statement considered			0
137	09/02/2011	07/19/2011	EIDS.	Electronic Information Disclosure Statement		45	133
136	09/02/2011		WIDS	Information Disclosure Statement (IDS) Filed			0
134	08/02/2011		FWDX	Date Forwarded to Examiner			0
135	07/19/2011		AF/D	Affidavit(s) (Rule 131 or 132) or Exhibit(s) Received			0
133	07/19/2011		A...	Response after Non-Final Action			0
132	07/18/2011		EML_NTR	Email Notification			0
131	07/18/2011		MEXIN	Mail Examiner Interview Summary (PTOL - 413)			0
130	07/12/2011		OAR	Office Action Review			0
129	07/12/2011		EXIN	Examiner Interview Summary Record (PTOL - 413)			0
139	06/28/2011		IDSC	Information Disclosure Statement considered			0
128	06/28/2011		RCAP	Reference capture on IDS			0
127	06/28/2011		M844	Information Disclosure Statement (IDS) Filed			0
126	06/28/2011		WIDS	Information Disclosure Statement (IDS) Filed			0
125	04/19/2011		ELC_RVW	Electronic Review			0
124	04/19/2011		EML_NTF	Email Notification			0
123	04/19/2011		MCTNF	Mail Non-Final Rejection			0
122	04/11/2011		CTNF	Non-Final Rejection			0
118	03/14/2011		IDSC	Information Disclosure Statement considered			0
117	03/14/2011		RCAP	Reference capture on IDS			0
116	03/14/2011	02/02/2011	M844	Information Disclosure Statement (IDS) Filed		40	105
115	03/14/2011		WIDS	Information Disclosure Statement (IDS) Filed			0
113	02/25/2011		FWDX	Date Forwarded to Examiner			0
112	02/24/2011		SA..	Supplemental Response			0
107	02/03/2011		FWDX	Date Forwarded to Examiner			0
104	02/03/2011		ABN9	Disposal for a RCE / CPA / R129			0
119	02/02/2011		IDSC	Information Disclosure Statement considered			0
111	02/02/2011		WIDS	Information Disclosure Statement (IDS) Filed			0
110	02/02/2011		RCAP	Reference capture on IDS			0
109	02/02/2011		M844	Information Disclosure Statement (IDS) Filed			0
108	02/02/2011		AF/D	Affidavit(s) (Rule 131 or 132) or Exhibit(s) Received			0
106	02/02/2011		AMSB	Amendment Submitted/Entered with Filing of CPA/RCE			0
105	02/02/2011	11/03/2010	RCEX	Request for Continued Examination (RCE)		91	86
103	02/02/2011		XT/G	Request for Extension of Time - Granted			0
102	02/02/2011		BRCE	Workflow - Request for RCE - Begin			0
101	01/14/2011		MEXIN	Mail Examiner.Interview Summary (PTOL - 413)			0
100	01/11/2011		EXIN	Examiner Interview Summary Record (PTOL - 413)			0
99	01/04/2011		MCTAV	Mail Advisory Action (PTOL - 303)			0
98	01/03/2011		CTAV	Advisory Action (PTOL-303)			0
95	12/27/2010		FWDX	Date Forwarded to Examiner			0
120	12/23/2010		IDSC	Information Disclosure Statement considered			0

97	12/23/2010		AF/D	Affidavit(s) (Rule 131 or 132) or Exhibit(s) Received			0
96	12/23/2010		EIDS.	Electronic Information Disclosure Statement			0
94	12/23/2010		A.NE	Amendment after Final Rejection			0
93	12/23/2010		XT/G	Request for Extension of Time - Granted			0
92	12/23/2010		WIDS	Information Disclosure Statement (IDS) Filed			0
91	10/16/2010		DOCK	Case Docketed to Examiner in GAU			0
121	09/23/2010		IDSC	Information Disclosure Statement considered			0
90	09/23/2010		RCAP	Reference capture on IDS			0
89	09/23/2010		M844	Information Disclosure Statement (IDS) Filed			0
88	09/23/2010		WIDS	Information Disclosure Statement (IDS) Filed			0
87	09/21/2010		BIG.	Statement Filed Indicating a Loss of Entitlement to Small Entity Status			0
86	08/03/2010		MCTFR	Mail Final Rejection (PTOL - 326)			0
85	08/02/2010		CTFR	Final Rejection			0
82	06/29/2010	05/05/2010	M844	Information Disclosure Statement (IDS) Filed		55	76
81	06/29/2010		RCAP	Reference capture on IDS			0
77	05/12/2010		FWDX	Date Forwarded to Examiner			0
83	05/05/2010		IDSC	Information Disclosure Statement considered			0
80	05/05/2010		RCAP	Reference capture on IDS			0
79	05/05/2010		M844	Information Disclosure Statement (IDS) Filed			0
78	05/05/2010		AF/D	Affidavit(s) (Rule 131 or 132) or Exhibit(s) Received			0
76	05/05/2010	02/06/2010	A...	Response after Non-Final Action		88	66
75	05/05/2010		XT/G	Request for Extension of Time - Granted			0
74	05/05/2010		WIDS	Information Disclosure Statement (IDS) Filed			0
70	11/25/2009		MEXIN	Mail Examiner Interview Summary (PTOL - 413)			0
69	11/19/2009		EXIN	Examiner Interview Summary Record (PTOL - 413)			0
84	11/18/2009		IDSC	Information Disclosure Statement considered			0
72	11/18/2009		RCAP	Reference capture on IDS			0
71	11/18/2009		M844	Information Disclosure Statement (IDS) Filed			0
67	11/18/2009		WIDS	Information Disclosure Statement (IDS) Filed			0
66	11/06/2009		MCTNF	Mail Non-Final Rejection			0
65	11/05/2009		CTNF	Non-Final Rejection			0
73	10/06/2009	09/28/2009	M844	Information Disclosure Statement (IDS) Filed		8	58
63	10/06/2009		IDSC	Information Disclosure Statement considered			0
62	10/06/2009		WIDS	Information Disclosure Statement (IDS) Filed			0
61	10/05/2009		FWDX	Date Forwarded to Examiner			0
59	10/05/2009		FWDX	Date Forwarded to Examiner			0
57	10/05/2009		ABN9	Disposal for a RCE / CPA / R129			0
60	09/28/2009		AMPR	RCE- AF Processed			0
58	09/28/2009	08/27/2009	RCEX	Request for Continued Examination (RCE)		32	48
56	09/28/2009		BRCE	Workflow - Request for RCE - Begin			0
52	09/25/2009		FWDX	Date Forwarded to Examiner			0
53	09/22/2009		AF/D	Affidavit(s) (Rule 131 or 132) or Exhibit(s) Received			0
51	09/22/2009		A.NE	Amendment after Final Rejection			0
50	09/22/2009		XT/G	Request for Extension of Time - Granted			0
64	08/20/2009		IDSC	Information Disclosure Statement considered			0
55	08/20/2009		RCAP	Reference capture on IDS			0
54	08/20/2009		M844	Information Disclosure Statement (IDS) Filed			0
49	08/20/2009		WIDS	Information Disclosure Statement (IDS) Filed			0
48	05/27/2009		MCTFR	Mail Final Rejection (PTOL - 326)			0
47	05/26/2009		CTFR	Final Rejection			0
45	03/18/2009		FWDX	Date Forwarded to Examiner			0
46	03/17/2009		IDSC	Information Disclosure Statement considered			0
44	03/17/2009	12/17/2008	A...	Response after Non-Final Action		90	33
43	03/17/2009		RCAP	Reference capture on IDS			0
42	03/17/2009		M844	Information Disclosure Statement (IDS) Filed			0
41	03/17/2009		XT/G	Request for Extension of Time - Granted			0
40	03/17/2009		WIDS	Information Disclosure Statement (IDS) Filed			0
39	03/12/2009		MPTGR	Mail-Petition Decision - Granted			0
38	03/12/2009		PTGR	Petition Decision - Granted			0
36	12/09/2008		DOCK	Case Docketed to Examiner in GAU			0
33	09/17/2008	12/05/2006	MCTNF	Mail Non-Final Rejection	652		0.5
32	09/15/2008		CTNF	Non-Final Rejection			0
35	08/25/2008		RCAP	Reference capture on IDS			0
34	08/25/2008		M844	Information Disclosure Statement (IDS) Filed			0
31	08/25/2008		EXIN	Examiner Interview Summary Record (PTOL - 413)			0
24	08/25/2008		IDSC	Information Disclosure Statement considered			0
23	08/25/2008		WIDS	Information Disclosure Statement (IDS) Filed			0
22	08/07/2008		DOCK	Case Docketed to Examiner in GAU			0
21	08/05/2008		DOCK	Case Docketed to Examiner in GAU			0
37	10/12/2007		PET.	Petition Entered			0
20	10/12/2007		LET.	Miscellaneous Incoming Letter			0
19	10/05/2007		DOCK	Case Docketed to Examiner in GAU			0
18	08/08/2007		A.PE	Preliminary Amendment			0
17	03/14/2007		DOCK	Case Docketed to Examiner in GAU			0
16	03/05/2007		TSSCOMP	IFW TSS Processing by Tech Center Complete			0
14	03/05/2007		DOCK	Case Docketed to Examiner in GAU			0
25	02/08/2007		IDSC	Information Disclosure Statement considered			0
13	02/08/2007		RCAP	Reference capture on IDS			0
12.7	02/08/2007		M844	Information Disclosure Statement (IDS) Filed			0
12	02/08/2007		WIDS	Information Disclosure Statement (IDS) Filed			0
9	03/16/2006		A.PE	Preliminary Amendment			0
8	12/23/2005		OIPE	Application Dispatched from OIPE			0
7	12/23/2005		COMP	Application Is Now Complete			0
6	12/15/2005		ADDFLFEE	Additional Application Filing Fees			0
5	12/15/2005		CORRSPEC	Applicant has submitted a new specification to correct Corrected Papers problems			0
4	11/01/2005		CPAP	Corrected Paper			0
3	10/28/2005		L194	Cleared by OIPE CSR			0

2	10/21/2005	SCAN	IFW Scan & PACR Auto Security Review	0
15	10/05/2005	A.PE	Preliminary Amendment	0
1	10/05/2005	IEXX	Initial Exam Team nn	0
0.5	10/05/2005	EFILE	Filing date	0

Export to: Excel

UNITED STATES PATENT AND TRADEMARK OFFICE

UNITED STATES DEPARTMENT OF COMMERCE
United States Patent and Trademark Office
Address: COMMISSIONER FOR PATENTS
P.O. Box 1450
Alexandria, Virginia 22313-1450
www.uspto.gov

APPLICATION NO.	FILING DATE	FIRST NAMED INVENTOR	ATTORNEY DOCKET NO.	CONFIRMATION NO.
11/244,342	10/05/2005	Chris Ian Lindsay	EUR 50913/USw	2200

7590 01/28/2011

Patent Counsel
Huntsman Polyurethanes
10003 Woodloch Forest Drive
The Woodlands, TX 77380

EXAMINER
SERGENT, RABON A

ART UNIT	PAPER NUMBER
1765	

MAIL DATE	DELIVERY MODE
01/28/2011	PAPER

Please find below and/or attached an Office communication concerning this application or proceeding.

The time period for reply, if any, is set in the attached communication.

UNITED STATES PATENT AND TRADEMARK OFFICE

Commissioner for Patents
United States Patent and Trademark Office
P.O. Box 1450
Alexandria, VA 22313-1450
www.uspto.gov

wk

1/28/2011

In re application of :
Lindsay : DECISION ON
Serial No. 11/244,342 : PETITION
Filed: October 5, 2005 :
For: NOVEL CHAIN EXTENDER USEFUL IN THE MANUFACTURE OF POLYURETHANES AND THE CORRESPONDING POLYURETHANES

This is a decision on the request filed on November 15, 2010. Applicant requests that the Notice of Abandonment mailed on October 26, 2010 should be withdrawn. The Notice of Abandonment states that the application was abandoned because of Applicant's failure to timely file a reply to the Notice of Non-Compliant Amendment mailed on April 15, 2010. Applicant asserts that the Notice of Non-Compliant Amendment was not received by the Applicant or the assignee at the correspondence address of record.

DECISION

The instant request is accepted as a timely petition under 37 C.F.R. 1.181 (no fee), and is evaluated under the procedures regarding an acceptable showing of non-receipt of an office action, TMOG 1156 O.G. 53, November 16, 1993, (see also MPEP 711.03(c) - NEW PROCEDURE TMOG 1170 O.G. 114).

A review of the petitioner's evidence indicates that the request has merit. The Petition is filed within the two week period following notification by the Examiner.

The Petition is **GRANTED**.

The abandonment is withdrawn and the Notice of Non-Compliant amendment will be remailed and the date for response will be one month from the mail date of the new notice.

__/Yvonne Eyler/
Director, Technology Center 1700

Yvonne L. Eyler, Director
Technology Center 1700
Chemical and Materials Engineering

Jason C. Huang
Patent Counsel
Huntsman Polyurethanes

10003 Woodloch Forest Drive
The Woodlands TX 77380

UNITED STATES PATENT AND TRADEMARK OFFICE

Commissioner for Patents
United States Patent and Trademark Office
P.O. Box 1450
Alexandria, VA 22313-1450
www.uspto.gov

JUNE KESSLER
1212 FLANDERS RD.
(STATE ROUTE 24)
RIVERHEAD NY 11901

MAILED

MAY 02 2011

OFFICE OF PETITIONS

In re Application of	:	
June Kessler	:	
Application No. 11/244,615	:	DECISION ON PETITION
Filed: October 6, 2005	:	
Attorney Docket No. PARAD.P003	:	

This is a decision on the petition under the unintentional provisions of 37 CFR 1.137(b), filed March 14, 2011, to revive the above-identified application.

The petition is **GRANTED**.

The application became abandoned for failure to reply in a proper and timely manner to the final Office action mailed, July 10, 2009, which set a shortened statutory period for reply of three (3) months. A one-month extension of time under the provisions of 37 CFR 1.136(a) was obtained. Accordingly, the application became abandoned on November 11, 2009. A Notice of Abandonment was mailed March 12, 2010.

The petition satisfies the requirements of 37 CFR 1.137(b) in that petitioner has supplied (1) the reply in the form of a continuation, (2) the petition fee of $810.00, and (3) a proper statement of unintentional delay.

The above-identified application is being revived solely for purposes of continuity. As continuity has been established by this decision reviving the above-identified application, the above-identified application is again abandoned in favor of continuing application No. 13/065,077, filed March 14, 2011.

Telephone inquiries concerning this decision should be directed to the undersigned at (571) 272-7751.

/Joan Olszewski/
Joan Olszewski
Petitions Examiner
Office of Petitions

UNITED STATES PATENT AND TRADEMARK OFFICE

Commissioner for Patents
United States Patent and Trademark Office
P.O. Box 1450
Alexandria, VA 22313-1450
www.uspto.gov

MERCHANT & GOULD
SCIENTIFIC ATLANTA, A CISCO COMPANY
P.O. BOX 2903
MINNEAPOLIS MN 55402-0903

MAILED
JUN 27 2011
OFFICE OF PETITIONS

In re Application of	:	
Arturo A. Rodriguez et al	:	
Application No. 11/244,621	:	DECISION GRANTING PETITION
Filed: October 6, 2005	:	UNDER 37 CFR 1.313(c)(2)
Attorney Docket No.	:	
60374.0013USC1/CPOL966247		

This is a decision on the petition under 37 CFR 1.313(c)(2), filed June 27, 2011, to withdraw the above-identified application from issue after payment of the issue fee.

The petition is **GRANTED**.

The above-identified application is withdrawn from issue for consideration of a submission under 37 CFR 1.114 (request for continued examination). *See* 37 CFR 1.313(c)(2).

Petitioner is advised that the issue fee paid on May 13, 2011 cannot be refunded. If, however, this application is again allowed, petitioner may request that it be applied towards the issue fee required by the new Notice of Allowance.[1]

Telephone inquiries should be directed to the undersigned at (571) 272-3208.

This application is being referred to Technology Center AU 2455 for processing of the request for continued examination under 37 CFR 1.114 and for consideration of the concurrently filed IDS.

/Karen Creasy/
Karen Creasy
Petitions Examiner
Office of Petitions

---

[1] *The request to apply the issue fee to the new Notice may be satisfied by completing and returning the new Part B – Fee(s) Transmittal Form (along with any balance due at the time of submission). Petitioner is advised that the Issue Fee Transmittal Form must be completed and timely submitted to avoid abandonment of the application.*

UNITED STATES PATENT AND TRADEMARK OFFICE

Commissioner for Patents
United States Patent and Trademark Office
P.O. Box 1450
Alexandria, VA 22313-1450
www.uspto.gov

Sebastian A. Da Silva
12 Hawtrey Drive Ruislip
London HA4 8QW GB UNITED KINGDOM

MAILED

OCT 26 2011

OFFICE OF PETITIONS

In re Patent No. 7,156,444	:	
Issue Date: January 2, 2007	:	
Application No. 11/244,657	:	ON PETITION
Filed: October 6, 2005	:	
Attorney Docket No. **UK8350**	:	

This is a decision on the petition under 37 CFR 1.378(c), filed October 5, 2011[1], to accept the unintentionally delayed payment of a maintenance fee for the above-identified patent.

This patent expired at midnight January 2, 2011, for failure to pay the 3½ year maintenance fee. Since this petition was submitted within twenty-four months after the six-month grace period provided in 37 CFR 1.362(e), the petition was timely filed under the provisions of 37 CFR 1.378(c).

The petition is **GRANTED**.

The maintenance fee is hereby accepted and the above-identified patent is reinstated as of the mail date of this decision.

Telephone inquiries concerning this decision should be directed to JoAnne Burke at (571) 272-4584.

JoAnne Burke
Petitions Examiner
Office of Petitions

---

[1] With a Certificate of Mailing of September 25, 2011.

UNITED STATES PATENT AND TRADEMARK OFFICE

UNITED STATES DEPARTMENT OF COMMERCE
United States Patent and Trademark Office
Address: COMMISSIONER FOR PATENTS
P.O. Box 1450
Alexandria, Virginia 22313-1450
www.uspto.gov

APPLICATION NO.	FILING DATE	FIRST NAMED INVENTOR	ATTORNEY DOCKET NO.	CONFIRMATION NO.
11/244,756	10/06/2005	George K. Kodokian	CL2602 USNA	4873

13733 7590 10/05/2011
Actamax Surgical Materials, LLC
c/o McCarter & English, LLP
Renaissance Centre, 405 N. King Street, 8th Floor
Wilimington, DE 19801

EXAMINER
DICKINSON, PAUL W

ART UNIT	PAPER NUMBER
1618	

MAIL DATE	DELIVERY MODE
10/05/2011	PAPER

Please find below and/or attached an Office communication concerning this application or proceeding.

The time period for reply, if any, is set in the attached communication.

UNITED STATES PATENT AND TRADEMARK OFFICE

Commissioner for Patents
United States Patent and Trademark Office
P.O. Box 1450
Alexandria, VA 22313-1450
www.uspto.gov

OCT 0 5 2011

Actamax Surgical Materials, LLC
c/o McCarter & English, LLP
Renaissance Centre, 405 N. King Street, 8th Floor
Wilimington DE 19801

In re Application of:	:
Kodakian et al.	: PETITION DECISION
Serial No.: 11/244,756	:
Filed: October 6, 2005	:
Attorney Docket No.: **CL2602 USNA**	

This is in response to the petition under 37 CFR § 1.181, filed December 20, 2010 requesting that the holding of new matter be rescinded and the requirement to cancel amendments to the speciation be withdrawn.

The delay in responding to this petition is regretted but it has just been brought to the attention of the deciding Official.

BACKGROUND

Relevant parts of the prosecution history are summarized below.

The examiner mailed a non-final Office action on November 19, 2010, wherein the examiner objected to the specification under 35 USC 132 (a) because it introduced new matter into the disclosure, namely the added language "swine uterine horn" to replace the original language "small intestine of a pig".

In response thereto, applicant filed this petition on December 20, 2010 under 37 CFR § 1.181, requesting that the holding of new matter be rescinded and the requirement to cancel amendments to the speciation be withdrawn.

DISCUSSION

The petition and the file history have been carefully considered.

Applicant argues that the "The Applicant used an organ of a pig to demonstrate the invention - i.e., tissue from a living organism. Specifically, the Applicants used swine uterine horn tissue in order to demonstrate the utility of the claimed sealing method. An incision was made in the organ and the incision was sealed using the claimed inventive process. However, in the drafting of the specification the Applicant incorrectly named the organ tissue used in the examples as "pig intestine" rather than "uterine horn". While not obvious to the drafter of the Application or to the inventor - neither of whom are medical practitioners -- the error was obvious to a person of ordinary skill in the medical arts. The error was spotted by a veterinarian who was reviewing the procedures and pointed out the error to the Applicant. In the face of this obvious error, Petitioner is attempting to exercise their duty of candor and correct the specification. The Declaration of Duane Broughton provided in support of a petition in Application Serial Number 11/289,169, wherein the identical error was made, is offered as an attachment to establish that the error was obvious to one of ordinary skill in the art."

Furthermore, applicant argues "While Petitioner believes correction is appropriate, the correction is not critical to either understanding or practicing the invention claimed. The specific type of organ used in the examples is not critical to the claimed invention since the claimed invention should work in substantially the same manner with various organs and tissue types. The usefulness of the invention is based on broad applicability to various tissue types. The correction has been offered primarily to provide an accurate description of the procedures used, that is to provide a clear and accurate description. Petitioner respectfully contends that correction of this error should be allowed in order to provide the public with accurate information."

Applicant's arguments have been accorded careful consideration and are persuasive, particularly in view of the sworn statement filed on September 25, 2009 in support of the petition of December 20, 2010 wherein such statement attests to the naming error of the organ in question.

DECISION

The petition is **GRANTED**.

As the case is currently under final rejection, applicants should note that no new action will be mailed to applicants, but applicants should note that the new matter objection will be withdrawn in any further Office actions by the examiner.

Should there be any questions about this decision please contact Marianne C. Seidel, by letter addressed to Director, TC 1600, at the address listed above, or by telephone at 571-272-0584 or by facsimile sent to the general Office facsimile number, 703-872-9306.

Remy Yucel
Director, Technology Center 1600

UNITED STATES PATENT AND TRADEMARK OFFICE

Commissioner for Patents
United States Patent and Trademark Office
P.O. Box 1450
Alexandria, VA 22313-1450
www.uspto.gov

ENERIZE CORPORATION
C/O ELENA SHEMBEL
4956 ROTHSCHILD DRIVE
CORAL SPRINGS, FL 33067-4134

MAILED

JAN 26 2012

OFFICE OF PETITIONS

In re Patent No. 7,288,941	:	
Issue Date: October 30, 2007	:	
Application No. 11/244,796	:	DECISION ON PETITION
Filed: October 6, 2005	:	UNDER 37 CFR 1.378(b)
Attorney Docket No.: 8326-3	:	

This is a decision in response to the petition filed November 25, 2011, entitled "Petitioner Under 37 CFR 1.378(d)." The petition includes the $565 maintenance fee under 37 CFR 1.20(e) and the $700 surcharge under 37 CFR 1.20(i)(1). Accordingly, the petition is being treated as a petition to accept an unavoidably delayed payment of a maintenance fee for the above-identified patent under the provisions of 37 CFR 1.378(b).

The petition is **DISMISSED**.

If reconsideration of this decision is desired, a petition for reconsideration under 37 CFR 1.378(e) must be filed within TWO (2) MONTHS from the mail date of this decision. No extension of this 2-month time limit can be granted under 37 CFR 1.136(a) or (b). **Any such petition for reconsideration must be accompanied by the petition fee of $400 as set forth in 37 CFR 1.17(f).** The petition for reconsideration should include an exhaustive attempt to provide the lacking item(s) noted below, since, after a decision on the petition for reconsideration, no further reconsideration or review of the matter will be undertaken by the Director.

The patent issued October 30, 2007. The first maintenance fee could have been paid from October 30, 2010, through May 2, 2011, or with a surcharge during the period from May 3, 2011 through October 30, 2011. Accordingly, the patent expired after midnight October 30, 2011, for failure to timely submit the first maintenance fee.

A petition to accept the delayed payment of a maintenance fee under 35 U.S.C. § 41(c) and 37 CFR 1.378(b) must be accompanied by (1) an adequate showing that the delay was unavoidable, since reasonable care was taken to ensure that the maintenance fee would be paid timely and that the petition was filed promptly after the patentee was notified of, or otherwise became aware of, the expiration of the patent, (2) payment of the appropriate maintenance fee, unless previously submitted, and (3) payment of the surcharge set forth in 37 CFR 1.20(i)(1).

This petition lacks item (1) above.

The Director may accept late payment of the maintenance fee if the delay is shown to the satisfaction of the Director to have been "unavoidable". 35 U.S.C. § 41(c)(1).

The showing of record is inadequate to establish unavoidable delay within the meaning of 37 CFR 1.378(b)(3).

Acceptance of late payment of a maintenance fee is considered under the same standard as that for reviving an abandoned application under 35 U.S.C. § 133 because 35 U.S.C. § 41(c)(1) uses the identical language, i.e. "unavoidable delay". Ray v. Lehman, 55 F.3d 606, 608-09, 34 USPQ2d 1786, 1787 (Fed. Cir. 1995)(quoting In re Patent No. 4,409,763, 7 USPQ2d 1798, 1800 (Comm'r Pat. 1988)). Decisions on reviving abandoned applications have adopted the "reasonably prudent person" standard in determining if the delay in responding to an Office action was unavoidable. Ex parte Pratt, 1887 Dec. Comm'r Pat. 31, 32-33 (Comm'r Pat. 1887)(the term "unavoidable" "is applicable to ordinary human affairs, and requires no more or greater care or diligence than is generally used and observed by prudent and careful men in relation to their most important business"); In re Mattullath, 38 App. D.C. 497, 514-515 (D.C. Cir. 1912); and Ex parte Henrich, 1913 Dec. Comm'r Pat. 139, 141. In addition, decisions on revival are made on a "case-by-case basis, taking all the facts and circumstances into account." Smith v. Mossinghoff, 671 F.2d 533, 538, 213 USPQ 977, 982 (D.C. Cir. 1982). Finally, a petition to revive an application as unavoidably abandoned cannot be granted where a petitioner has failed to meet his or her burden of establishing the cause of the unavoidable delay. Haines v. Quigg, 673 F. Supp. 314, 316-17, 5 USPQ2d 1130, 1131-32 (N.D. Ind. 1987).

In essence, petitioner must show that patentee was aware of the need to pay the maintenance fee, and to that end was tracking it, or had engaged someone to track it before the expiration, but when the fee came due, was "unavoidably" prevented from making the maintenance fee payment until the petition was filed.

In determining whether a delay in paying a maintenance fee was unavoidable, one looks to whether the party responsible for payment of the maintenance fee exercised the due care of a reasonably prudent person. Ray, 55 F3d at 608-609, 34 USPQ2D at 1787. It is incumbent upon the patent owner to implement steps to schedule and pay the fee, or obligate another to do so. See California Medical Products v. Technol. Med. Prod., 921 F.Supp 1219, 1259 (D. Del. 1995). That is, 37 CFR 1.378(b)(3) requires a showing of the steps in place to pay the maintenance fee.

Petitioner indicates that Dr. Elena Shembel was responsible for paying the maintenance fee on behalf of the Assignee. Petitioner explains that the delay in payment of the maintenance fees was due to a miscalculation of the due date for payment of the maintenance fee.

Petitioner should note that a delay resulting from the lack of knowledge or improper application of the patent rules or statute does not constitute an “unavoidable” delay.

As the patentee at the time of expiration, it was incumbent on petitioner to have this patent docketed for payment of the maintenance fee in a reliable system as would be employed by a prudent and careful person with respect to his most important business, or to have engaged another for that purpose. See California Medical Products v. Technol Med. Prod., 921 F.Supp. 1219, 1259 (D.Del. 1995). Even where, as here, another has been relied upon to pay the maintenance fees, such asserted reliance *per se* does not provide a petitioner with a showing of unavoidable delay within the meaning of 37 CFR § 1.378(b) and 35 USC § 41(c). Rather, such reliance merely shifts the focus of the inquiry from the petitioner to whether the obligated party acted reasonably and prudently. Nevertheless, a petitioner is bound by any errors that may have been committed by the obligated party.

As 35 USC § 41(b) requires the payment of fees at specified intervals to maintain a patent in force, rather than some response to a specific action by the Office under 35 USC § 133, a reasonably prudent person in the exercise of due care and diligence would have taken steps to ensure the timely payment of such maintenance fees. Ray, 55 F.3d at 609, 34 USPQ2d at 1788. Since petitioner does not provide a showing that Dr. Shembel had in fact been tracking the maintenance fee due dates with a reliable tracking system, such as would be used by prudent and careful men in relation to their most important business, petitioner cannot reasonably show that the delay was unavoidable delay. In re Katrapat, 6 USPQ2d 1863, 1867-1868 (Comm'r Pat. 1988); California, supra.

Since petitioner has not shown to the satisfaction of the Director that the delay in paying the maintenance fee was unavoidable, the petition cannot be granted at this time.

Petitioner should note that if this petition is not renewed or if renewed and not granted, then the maintenance fee and post expiration surcharge are refundable. See 37 CFR 1.378(e) and such may be obtained by written request from the Office of Finance, Refund Section, at the USPTO address above.

Petitioner should also note that since the maintenance fee was proffered within 24 months of the date of expiration date of the patent, he has an alternate remedy under the unintentional provisions of 37 CFR 1.378(c) which does not require a showing of the delay in timely paying the maintenance fee in order to reinstate the patent. The $700 already submitted would be applied to the $1,640 fee owed under 37 CFR 1.378(c), leaving a balance due of $940.

Further correspondence with respect to this matter should be delivered through one of the following mediums:

By mail:	Mail Stop PETITIONS Commissioner for Patents Post Office Box 1450 Alexandria, VA 22313-1450
By hand:	Customer Service Window Mail Stop Petitions Randolph Building 401 Dulany Street Alexandria, VA 22314
By fax:	(571) 273-8300 ATTN: Office of Petitions
By Internet:	EFS-Web[1]

Any questions concerning this matter may be directed to the undersigned at (571) 272-3204.

/SDB/

Sherry D. Brinkley
Petitions Examiner
Office of Petitions

[1] www.uspto.gov/ebc/efs_help.html (for help using EFS-Web call the Patent Electronic Business Center at (866) 217-9197)

UNITED STATES PATENT AND TRADEMARK OFFICE

UNITED STATES DEPARTMENT OF COMMERCE
United States Patent and Trademark Office
Address: COMMISSIONER FOR PATENTS
P.O. Box 1450
Alexandria, Virginia 22313-1450
www.uspto.gov

MORRISS OBRYANT COMPAGNI, P.C.
734 EAST 200 SOUTH
SALT LAKE CITY, UT 84102

Mail Date: 08/04/2010

Applicant	: Scott M. Packer	: DECISION ON REQUEST FOR
Patent Number	: 7651018	: RECALCULATION of PATENT
Issue Date	: 01/26/2010	: TERM ADJUSTMENT IN VIEW
Application No	: 11/244,824	: OF WYETH AND NOTICE OF INTENT TO
Filed	: 10/05/2005	: ISSUE CERTIFICATE OF CORRECTION
		:

The Request for Recalculation is **GRANTED** to the extent indicated.

The patent term adjustment has been determined to be **668** days. The USPTO will *sua sponte* issue a certificate of correction reflecting the amount of PTA days determined by the recalculation.

Prior to the issuance of the certificate of correction, the USPTO will afford patentee an opportunity to be heard and request reconsideration. Accordingly, patentee has **one month or thirty (30) days**, whichever is longer, to file a request for reconsideration of this patent term adjustment calculation. See 35 U.S.C. 154(b)(3)(B)(ii) and 37 CFR 1.322(a)(4). No extensions of time will be granted under 37 CFR 1.136.

Patentee should use document code PET.OP if electronically filing a request for reconsideration of this patent term adjustment calculation. The patentee must also include the information required by 37 CFR 1.705(b)(2) and the fee required by 37 CFR 1.18(e). If patentee does not file a timely request for reconsideration of this patent term adjustment calculation including the information required by 37 CFR 1.705(b)(2) and the fee required by 37 CFR 1.18(e), the USPTO will issue a certificate of correction reflecting the PTA determination noted above.

Patentee should be aware that in order to preserve the right to review in the United States District Court for the District of Columbia of the USPTO patent term adjustment determination, patentee must ensure that he or she also take the steps required under 35 U.S.C. 154(b)(4)(A) in a timely manner. Nothing in the request for recalculation should be construed as providing an alternative time frame for commencing a civil action under 35 U.S.C. 154(b)(4)(A).

Any questions concerning this decision should be directed to the Office of Patent Legal Administration at 571-272-7702.

UNITED STATES PATENT AND TRADEMARK OFFICE

Commissioner for Patents
United States Patent and Trademark Office
P.O. Box 1450
Alexandria, VA 22313-1450
www.uspto.gov

Kilpatrick Townsend & Stockton LLP
Two Embarcadero Center
Eighth Floor
San Francisco, CA 94111-3834

MAILED

MAR 28 2011

OFFICE OF PETITIONS

In re Application of :
Peter Tenereillo :
Application No. 11/244,909 :
Filed: October 5, 2005 :
Attorney Docket No. 027431-000110US :

DECISION ON PETITION TO WITHDRAW FROM RECORD

This is a decision on the Request to Withdraw as attorney or agent of record under 37 CFR §§ 1.36(b) or 10.40, filed February 1, 2011.

The request is **MOOT**.

A review of the file record indicates that any previous power of attorney was revoked by the assignee of the above application on January 20, 2011. Accordingly, the request to withdraw under 37 CFR §§ 1.36(b) or 10.40 is unnecessary.

All future communications from the Office will be directed to the below-listed address of record until otherwise notified by applicant.

There is an outstanding Office action mailed on March 15, 2011, that requires a reply from applicant.

Telephone inquires concerning this decision should be directed to the undersigned at (571) 272-3226.

Andrea Smith
Petitions Examiner
Office of Petitions

cc: NAVTEQ NORTH AMERICA, LLC
425 West RANDOLPH STREET
SUITE 1200, PATENT DEPT
CHICAGO, IL 60606

UNITED STATES PATENT AND TRADEMARK OFFICE

Commissioner for Patents
United States Patent and Trademark Office
P.O. Box 1450
Alexandria, VA 22313-1450
www.uspto.gov

Paper No.

MAILED

SEP 28 2010

OFFICE OF PETITIONS

SIDLEY AUSTIN LLP
717 N. Harwood
Suite 3400
Dallas TX 75201

In re Patent No. 7,750,118	:	DECISION ON REQUEST
Ashkenazi	:	FOR
Issue Date: July 6, 2010	:	RECONSIDERATION OF
Application No. 11/245,053	:	PATENT TERM ADJUSTMENT
Filed: October 7, 2005	:	and
Atty Docket No. 22338-908	:	NOTICE OF INTENT TO ISSUE
	:	CERTIFICATE OF CORRECTION

This is a decision on the petition filed on September 3, 2010, requesting that the patent term adjustment indicated on the above-identified patent be corrected to indicate that the term of the above-identified patent is extended or adjusted by five hundred and sixty-six (566) days.

The petition to correct the patent term adjustment indicated on the above-identified patent to indicate that the term of the above-identified patent is extended or adjusted by four hundred and forty-five (445) days is **GRANTED to the extent indicated herein**.

Petitioner has indicated that this patent is not subject to a terminal disclaimer.[1]

As a preliminary matter, the period of examination delay is 283 (279 days pursuant to 37 C.F.R. § 1.703(a)(1) plus 4 days pursuant to 37 C.F.R. § 1.703(a)(6)) days, not 284 days.[2] The period of B-delay is 576 (637 - 57 days that are excluded due to the appellate process - 4 days of overlap) days, not 581 days.[3]

---

[1] Petition, page 2.
[2] Id.
[3] Id.

Patentee has asserted that the 120-day reduction (line 88 on the PAIR calculations) is improper, and that "Patentee did not take any action after October 15, 2009 that should trigger applicant delay under § 1.704."[4]

37 C.F.R. § 1.704(c)(10) states that circumstances that constitute a failure of the applicant to engage in reasonable efforts to conclude processing or examination of an application also include the following circumstances, which will result in the following reduction of the period of adjustment set forth in § 1.703 to the extent that the periods are not overlapping:

> Submission of an amendment under § 1.312 or other paper after a notice of allowance has been given or mailed, in which case the period of adjustment set forth in § 1.703 shall be reduced by the lesser of:
> (i) The number of days, if any, beginning on the date the amendment under § 1.312 or other paper was filed and ending on the mailing date of the Office action or notice in response to the amendment under § 1.312 or such other paper; or
> (ii) Four months…

A notice of allowance was mailed on December 10, 2009. Two pages of drawings were filed on January 20, 2010, and Application no. 11/245,053 matured into U.S. patent no. 7,750,118 one hundred and sixty-seven days later on July 6, 2010. Pursuant to 37 C.F.R. § 1.704(c)(10) a reduction of the lesser of 168[5, 6] days and 120[7] days is warranted. It follows that a reduction of 120 days is warranted.

As such, the patent term adjustment is increased by 445 (288 days of examination delay plus 576 "B-delay" (637 over three years minus 57 days that are excluded due to Appellate review minus 4 days of overlap) minus 419 days of Applicant delay) days, not 566 days.

The Office acknowledges submission of the $200.00 fee. No additional fees are required.

---

[4] Id. at 3.
[5] The date on which the drawings were filed is included in the period of delay.
[6] 37 C.F.R. § 1.704(c)(10)(i).
[7] 37 C.F.R. § 1.704(c)(10)(ii).

The Office will *sua sponte* issue a certificate of correction. Pursuant to 37 CFR 1.322, the Office will not issue a certificate of correction without first providing assignee or patentee an opportunity to be heard. Accordingly, Patentee is given **one (1) month or thirty (30) days**, whichever is longer, from the mail date of this decision to respond. No extensions of time will be granted under 37 C.F.R. § 1.136.

The application is being forwarded to the Certificates of Branch for issuance of a certificate of correction. The Office will issue a certificate of correction indicating that the term of the above-identified patent is extended or adjusted by **four hundred and forty-five (445) days**.

Telephone inquiries specific to this matter should be directed to the undersigned at (571) 272-3225.

/Paul Shanoski/
Paul Shanoski
Senior Attorney
Office of Petitions

Enclosure: Copy of DRAFT Certificate of Correction

UNITED STATES PATENT AND TRADEMARK OFFICE

CERTIFICATE OF CORRECTION

PATENT : 7,750,118 B2

DATED : **July 6, 2010** **DRAFT**

INVENTOR(S) : Ashkenazi

It is certified that error appears in the above-identified patent and that said Letters Patent is hereby corrected as shown below:

On the cover page,

[*] Notice: Subject to any disclaimer, the term of this patent is extended or adjusted under 35 USC 154(b) by 446 days

Delete the phrase "by 446 days" and insert – by 445 days--

UNITED STATES PATENT AND TRADEMARK OFFICE

Commissioner for Patents
United States Patent and Trademark Office
P.O. Box 1450
Alexandria, VA 22313-1450
www.uspto.gov

MCDERMOTT WILL & EMERY LLP
600 13TH STREET, N.W.
WASHINGTON DC 20005-3096

MAILED
JAN 07 2011
OFFICE OF PETITIONS

In re Patent No. 7,709,932	:	
Application No. 11/245,059	:	
Filed: October 7, 2005	:	ON PETITION
Issued: May 4, 2010	:	
Attorney Docket No. 065781-0018	:	

This is a decision on the petition under 37 CFR 3.81(b), filed December 10, 2010, to add additional assignees on the front page of the above-identified patent by way of a Certificate of Correction.

The request is **DISMISSED**.

Petitioner states that two additional assignees should be included on the front page of the instant patent. Only "Renesas Technology Corp." was included on the Part B - Fee(s) Transmittal form at the time of payment of the issue fee.

37 CFR 3.81(b), effective June 25, 2004, reads:

> *After payment of the issue fee:* Any request for issuance of an application in the name of the assignee submitted after the date of payment of the issue fee, and any request for a patent to be corrected to state the name of the assignee, must state that the assignment was submitted for recordation as set forth in § 3.11 before issuance of the patent, and must include a request for a certificate of correction under § 1.323 of this chapter (accompanied by the fee set forth in § 1.20(a)) and the processing fee set forth in § 1.17(i) of this chapter.

The Office wishes for petitioner to clarify which additional assignees should be included on the Certificate of Correction. In the instant petition, petitioner states, "on the Title Page of the Patent, in item "(73) Assignee," please add, **Kabushiki Kaisha Toshiba (JP)** and **Shinko Electric Industries, Nagano (JP)**." On the Certificate of Correction submitted with the instant petition, it states, "In section (73) Assignee records, Renesas Technology Corp., Tokyo (JP), it should read, Shinko Electric Industries, Nagano, Japan and Renesas Technology Corp., Tokyo, Japan." It is unclear whether Kabushiki Kaisha Toshiba is one of the assignees petitioner intended to be added.

Inquiries concerning this decision should be directed to the undersigned at (571) 272-3206. Any questions concerning issuance of a certificate of correction should be directed to the Certificates of Correction Branch at (571) 272-4200.

Liana Walsh
Petitions Examiner
Office of Petitions

UNITED STATES PATENT AND TRADEMARK OFFICE

Commissioner for Patents
United States Patent and Trademark Office
P.O. Box 1450
Alexandria, VA 22313-1450
www.uspto.gov

MCDERMOTT WILL & EMERY LLP
600 13TH STREET, N.W.
WASHINGTON DC 20005-3096

MAILED

MAR 28 2011

OFFICE OF PETITIONS

In re Patent No. 7,709,932	:	
Application No. 11/245,059	:	
Filed: October 7, 2005	:	ON PETITION
Issued: May 4, 2010	:	
Attorney Docket No. 065781-0018	:	

This is a decision on the renewed petition filed February 16, 2011, which is being treated as a request under 37 CFR 3.81(b)[1] to add the names of the second and third assignees on the front page of the above-identified patent by way of a Certificate of Correction.

The request is **GRANTED**.

This matter is being referred to the Certificates of Correction Branch for issuance of the requested Certificate of Correction.

Telephone inquiries concerning this decision may be directed to the undersigned at (571) 272-3206. Inquiries regarding the issuance of a certificate of correction should be directed to the Certificate of Correction Branch at (571) 272-4200.

Liana Walsh
Petitions Examiner
Office of Petitions

[1] *See* MPEP 1309, subsection II; and Official Gazette of June 22, 2004.

UNITED STATES PATENT AND TRADEMARK OFFICE

UNITED STATES DEPARTMENT OF COMMERCE
United States Patent and Trademark Office
Address: COMMISSIONER FOR PATENTS
P.O. Box 1450
Alexandria, Virginia 22313-1450
www.uspto.gov

BROOKHAVEN SCIENCE ASSOCIATES/
BROOKHAVEN NATIONAL LABORATORY
BLDG. 490C - P.O. BOX 5000
UPTON, NY 11973

Mail Date: 01/12/2011

Applicant	: Vyacheslav Solovyov	: DECISION ON REQUEST FOR
Patent Number	: 7622426	: RECALCULATION of PATENT
Issue Date	: 11/24/2009	: TERM ADJUSTMENT IN VIEW
Application No	: 11/245,138	: OF WYETH AND NOTICE OF INTENT TO
Filed	: 10/06/2005	: ISSUE CERTIFICATE OF CORRECTION
		:

The Request for Recalculation is **GRANTED** to the extent indicated.

The patent term adjustment has been determined to be **1084** days. The USPTO will *sua sponte* issue a certificate of correction reflecting the amount of PTA days determined by the recalculation.

Prior to the issuance of the certificate of correction, the USPTO will afford patentee an opportunity to be heard and request reconsideration. Accordingly, patentee has **one month or thirty (30) days**, whichever is longer, to file a request for reconsideration of this patent term adjustment calculation. See 35 U.S.C. 154(b)(3)(B)(ii) and 37 CFR 1.322(a)(4). No extensions of time will be granted under 37 CFR 1.136.

Patentee should use document code PET.OP if electronically filing a request for reconsideration of this patent term adjustment calculation. The patentee must also include the information required by 37 CFR 1.705(b)(2) and the fee required by 37 CFR 1.18(e). If patentee does not file a timely request for reconsideration of this patent term adjustment calculation including the information required by 37 CFR 1.705(b)(2) and the fee required by 37 CFR 1.18(e), the USPTO will issue a certificate of correction reflecting the PTA determination noted above.

Patentee should be aware that in order to preserve the right to review in the United States District Court for the District of Columbia of the USPTO patent term adjustment determination, patentee must ensure that he or she also take the steps required under 35 U.S.C. 154(b)(4)(A) in a timely manner. Nothing in the request for recalculation should be construed as providing an alternative time frame for commencing a civil action under 35 U.S.C. 154(b)(4)(A).

Any questions concerning this decision should be directed to the Office of Patent Legal Administration at 571-272-7702.

PTO/SB/131 (01-10)
Approved for use through 02/28/2011. OMB 0651-0020
U.S. Patent and Trademark Office; U. S. DEPARTMENT OF COMMERCE
Under the Paperwork Reduction Act of 1995, no persons are required to respond to a collection of information unless it displays a valid OMB control number.

REQUEST FOR RECALCULATION OF PATENT TERM ADJUSTMENT IN VIEW OF *WYETH**

Attorney Docket Number: OBAY3002/GAL	Patent Number: 7665787
Filing Date (or 371(b) or (f) Date): 2005-10-07	Issue Date: 2010-02-23
First Named Inventor: Tadahiro Obayashi	
Title: THIN PLATE SUPPORTING CONTAINER CLAMPING DEVICE	

PATENTEE HEREBY REQUESTS RECALCULATION OF THE PATENT TERM ADJUSTMENT (PTA) UNDER 35 USC 154(b) INDICATED ON THE ABOVE-IDENTIFIED PATENT. THE PATENTEE'S SOLE BASIS FOR REQUESTING THE RECALCULATION IS THE USPTO'S PRE-*WYETH* INTERPRETATION OF 35 U.S.C. 154(b)(2)(A).

Note: This form is only for requesting a recalculation of PTA for patents issued before March 2, 2010, if the sole basis for requesting the recalculation is the USPTO's pre-*Wyeth* interpretation of 35 U.S.C. 154(b)(2)(A). See Instruction Sheet on page 2 for more information.

Patentees are reminded that to preserve the right to review in the United States District Court for the District of Columbia of the USPTO's patent term adjustment determination, a patentee must ensure that he or she also takes the steps required under 35 U.S.C. 154(b)(3) and (b)(4) and 37 CFR 1.705 in a timely manner.

**Wyeth v. Kappos*, No. 2009-1120 (Fed. Cir., Jan. 7, 2010).

Signature /ThomasJMoore/	Date 2010-08-20
Name (Print/Typed) Thomas J. Moore	Registration Number 28974

***Note**: Signatures of all the inventors or assignees of record of the entire interest or their representative(s) are required in accordance with 37 CFR 1.33 and 11.18. Please see 37 CFR 1.4(d) for the form of the signature. If necessary, submit multiple forms for more than one signature, see below**.*

☐ *Total of _____ forms are submitted.

The information is required to obtain or retain a benefit by the public which is to file (and by the USPTO to process) an application. Confidentiality is governed by 35 U.S.C. 122 and 37 CFR 1.11 and 1.14. This collection is estimated to take 12 hours to complete, including gathering, preparing, and submitting the completed application form to the USPTO. Time will vary depending upon the individual case. Any comments on the amount of time you require to complete this form and/or suggestions for reducing this burden, should be sent to the Chief Information Officer, U.S. Patent and Trademark Office, U.S. Department of Commerce, P.O. Box 1450, Alexandria, VA 22313-1450. DO NOT SEND FEES OR COMPLETED FORMS TO THIS ADDRESS. **SEND TO: Commissioner for Patents, P.O. Box 1450, Alexandria, VA 22313-1450.**

If you need assistance in completing the form, call 1-800-PTO-9199 and select option 2.

PTO/SB/131 (01-10)
Approved for use through 02/28/2011. OMB 0651-0020
U.S. Patent and Trademark Office; U. S. DEPARTMENT OF COMMERCE
Under the Paperwork Reduction Act of 1995, no persons are required to respond to a collection of information unless it displays a valid OMB control number.

Instruction Sheet for: REQUEST FOR RECALCULATION OF PATENT TERM ADJUSTMENT IN VIEW OF *WYETH**

(Not to be Submitted to the USPTO)

This form is only for requesting a recalculation of PTA for patents issued before March 2, 2010, if the sole basis for requesting the recalculation is the USPTO's pre-*Wyeth* interpretation of 35 U.S.C. 154(b)(2)(A).

This form must be filed within 180 days of the day the patent was granted, with the following exception:

> Patentees who received a decision from the USPTO under the USPTO's pre-Wyeth interpretation of 35 U.S.C. 154(b)(2)(A) may file a request for reconsideration of that decision if such a request for reconsideration is filed within **two months** of the date of the decision (37 CFR 1.181(f)). If the patentee's sole basis for requesting reconsideration of the decision is the USPTO's pre-Wyeth interpretation of 35 U.S.C. 154(b)(2)(A), the request for reconsideration need only state that reconsideration is being requested in view of Wyeth (this form may be used for this purpose if it is filed within **two months** of the date of the decision from the USPTO).

Do not use this form if the application has been allowed, but not yet issued as a patent.

1. **For patents issued before March 2, 2010:** A request for reconsideration under 37 CFR 1.705(d) and the fee set forth in 37 CFR 1.18(e) are not required, provided that the patentee's sole basis for requesting recalculation of the PTA in the patent is the USPTO's pre-*Wyeth* interpretation of 35 U.S.C. 154(b)(2)(A) and this form is filed within 180 days of the day the patent was granted.

2. **For patents issued on or after March 2, 2010 (do not use this form):** Patentees seeking a revised PTA in a patent issued on or after March 2, 2010, must file a request for reconsideration under 37 CFR 1.705(d) that complies with the requirements of 37 CFR 1.705(b)(1) and (b)(2) within two months of the day the patent issued.

For more information, see "Notice Concerning Calculation of the Patent Term Adjustment With Respect to the Overlapping Delay Provision of 35 U.S.C. 154(b)(2)(A)" available on the USPTO Web site at http://www.uspto.gov/patents/law/notices/2010.jsp.

**Wyeth v. Kappos*, No. 2009-1120 (Fed. Cir., Jan. 7, 2010).

Privacy Act Statement

The **Privacy Act of 1974 (P.L. 93-579)** requires that you be given certain information in connection with your submission of the attached form related to a patent application or patent. Accordingly, pursuant to the requirements of the Act, please be advised that: (1) the general authority for the collection of this information is 35 U.S.C. 2(b)(2); (2) furnishing of the information solicited is voluntary; and (3) the principal purpose for which the information is used by the U.S. Patent and Trademark Office is to process and/or examine your submission related to a patent application or patent. If you do not furnish the requested information, the U.S. Patent and Trademark Office may not be able to process and/or examine your submission, which may result in termination of proceedings or abandonment of the application or expiration of the patent.

The information provided by you in this form will be subject to the following routine uses:

1. The information on this form will be treated confidentially to the extent allowed under the Freedom of Information Act (5 U.S.C. 552) and the Privacy Act (5 U.S.C 552a). Records from this system of records may be disclosed to the Department of Justice to determine whether disclosure of these records is required by the Freedom of Information Act.
2. A record from this system of records may be disclosed, as a routine use, in the course of presenting evidence to a court, magistrate, or administrative tribunal, including disclosures to opposing counsel in the course of settlement negotiations.
3. A record in this system of records may be disclosed, as a routine use, to a Member of Congress submitting a request involving an individual, to whom the record pertains, when the individual has requested assistance from the Member with respect to the subject matter of the record.
4. A record in this system of records may be disclosed, as a routine use, to a contractor of the Agency having need for the information in order to perform a contract. Recipients of information shall be required to comply with the requirements of the Privacy Act of 1974, as amended, pursuant to 5 U.S.C. 552a(m).
5. A record related to an International Application filed under the Patent Cooperation Treaty in this system of records may be disclosed, as a routine use, to the International Bureau of the World Intellectual Property Organization, pursuant to the Patent Cooperation Treaty.
6. A record in this system of records may be disclosed, as a routine use, to another federal agency for purposes of National Security review (35 U.S.C. 181) and for review pursuant to the Atomic Energy Act (42 U.S.C. 218(c)).
7. A record from this system of records may be disclosed, as a routine use, to the Administrator, General Services, or his/her designee, during an inspection of records conducted by GSA as part of that agency's responsibility to recommend improvements in records management practices and programs, under authority of 44 U.S.C. 2904 and 2906. Such disclosure shall be made in accordance with the GSA regulations governing inspection of records for this purpose, and any other relevant (*i.e.*, GSA or Commerce) directive. Such disclosure shall not be used to make determinations about individuals.
8. A record from this system of records may be disclosed, as a routine use, to the public after either publication of the application pursuant to 35 U.S.C. 122(b) or issuance of a patent pursuant to 35 U.S.C. 151. Further, a record may be disclosed, subject to the limitations of 37 CFR 1.14, as a routine use, to the public if the record was filed in an application which became abandoned or in which the proceedings were terminated and which application is referenced by either a published application, an application open to public inspection or an issued patent.
9. A record from this system of records may be disclosed, as a routine use, to a Federal, State, or local law enforcement agency, if the USPTO becomes aware of a violation or potential violation of law or regulation.

UNITED STATES PATENT AND TRADEMARK OFFICE

UNITED STATES DEPARTMENT OF COMMERCE
United States Patent and Trademark Office
Address: COMMISSIONER FOR PATENTS
P.O. Box 1450
Alexandria, Virginia 22313-1450
www.uspto.gov

BACON & THOMAS, PLLC
625 SLATERS LANE
FOURTH FLOOR
ALEXANDRIA, VA 22314-1176

Mail Date: 09/13/2010

Applicant	: Tadahiro Obayashi	: DECISION ON REQUEST FOR
Patent Number	: 7665787	: RECALCULATION of PATENT
Issue Date	: 02/23/2010	: TERM ADJUSTMENT IN VIEW
Application No	: 11/245,159	: OF WYETH AND NOTICE OF INTENT TO
Filed	: 10/07/2005	: ISSUE CERTIFICATE OF CORRECTION
		:

The Request for Recalculation is **GRANTED** to the extent indicated.

The patent term adjustment has been determined to be **1124** days. The USPTO will *sua sponte* issue a certificate of correction reflecting the amount of PTA days determined by the recalculation.

Prior to the issuance of the certificate of correction, the USPTO will afford patentee an opportunity to be heard and request reconsideration. Accordingly, patentee has **one month or thirty (30) days**, whichever is longer, to file a request for reconsideration of this patent term adjustment calculation. See 35 U.S.C. 154(b)(3)(B)(ii) and 37 CFR 1.322(a)(4). No extensions of time will be granted under 37 CFR 1.136.

Patentee should use document code PET.OP if electronically filing a request for reconsideration of this patent term adjustment calculation. The patentee must also include the information required by 37 CFR 1.705(b)(2) and the fee required by 37 CFR 1.18(e). If patentee does not file a timely request for reconsideration of this patent term adjustment calculation including the information required by 37 CFR 1.705(b)(2) and the fee required by 37 CFR 1.18(e), the USPTO will issue a certificate of correction reflecting the PTA determination noted above.

Patentee should be aware that in order to preserve the right to review in the United States District Court for the District of Columbia of the USPTO patent term adjustment determination, patentee must ensure that he or she also take the steps required under 35 U.S.C. 154(b)(4)(A) in a timely manner. Nothing in the request for recalculation should be construed as providing an alternative time frame for commencing a civil action under 35 U.S.C. 154(b)(4)(A).

Any questions concerning this decision should be directed to the Office of Patent Legal Administration at 571-272-7702.

UNITED STATES PATENT AND TRADEMARK OFFICE

Commissioner for Patents
United States Patent and Trademark Office
P.O. Box 1450
Alexandria, VA 22313-1450
www.uspto.gov

MCANDREWS HELD & MALLOY, LTD
500 WEST MADISON STREET
SUITE 3400
CHICAGO IL 60661

MAILED
MAR 06 2012
OFFICE OF PETITIONS

In re Application of	:	DECISION ON APPLICATION
ERIC LAUPER	:	FOR PATENT TERM ADJUSTMENT
Application No. 11/245,184	:	
Filed: October 7, 2005	:	
Attorney Docket No. 278570US2	:	

This is a decision on the "APPLICATION FOR RECONSIDERATION OF THE DETERMINATION OF PATENT TERM ADJUSTMENT UNDER 35 U.S.C. 154(b) ACCOMPANYING THE NOTICE OF ALLOWANCE (37 C.F.R. 1.705)" filed February 28, 2012. Applicants request that the initial determination of patent term adjustment under 35 U.S.C. 154(b) be corrected from 693 days to 861 days.

The request reconsideration of the patent term adjustment at the time of the mailing of the notice of allowance is DISMISSED.

On November 30, 2011, the Office mailed the Determination of Patent Term Adjustment under 35 U.S.C. 154(b) in the above-identified application. The Notice stated that the patent term adjustment (PTA) to date is 693 days.

On February 28, 2012, applicants timely submitted the present application for patent term adjustment. Applicants request that the initial Determination of Patent Term Adjustment be corrected from 693 days to 861 days. Applicants aver that the Office erred in failing to calculate an adjustment of 168 days pursuant to 37 CFR 1.702(e). Specifically, applicants assert:

> After a notice of appeal of the final rejection to the Board of Patent Appeals and Interferences was filed on June 16, 2011, but before any decision was issued by

> the Board of Patent Appeals and Interference, the Office reopened prosecution and issued an Office action under 35 U.S.C. 132 or notice of allowance under 35 U.S.C. 151 on November 30, 2011. The patent term adjustment on this ground should be the difference between the two dates stated above, plus one day, which is 168 days.

Petition, 02/28/12, p. 3. Applicants acknowledge that the current rule, 37 CFR 1.703(b)(4), does not explicitly provide a patent term adjustment in this situation. However, applicants cite to the proposed rules that would allow for a patent term adjustment under these circumstances. *See Revision of Patent Term Extension and Adjustment Provisions Relating to Appellate Review and Information Disclosure Statements, 76 Fed. Reg.* 18990 (April 6, 2011).

The Office has carefully considered applicants' arguments. However, as applicants acknowledge, the current statute and rules of practice do not provide for the requested adjustment of the patent term. Therefore, the petition must be dismissed at this time.

To the extent that the final rule on *Revision of Patent Term Extension and Adjustment Provisions Relating to Appellate Review* revises the interpretation of appellate review applied in this decision, applicants are given **one (1) month or thirty (30) days**, whichever is longer, from the date of the final rule to file a request for reconsideration. No extensions of time will be granted under 37 CFR 1.136.

In view thereof, no change in the initial determination of patent term adjustment is merited. The patent term adjustment at the time of the mailing of the notice of allowance remains 693 days.

The Office acknowledges the $200.00 fee set forth in 37 CFR 1.18(e).

Applicants are reminded that any delays by the Office pursuant to 37 CFR 1.702(a)(4) and 1.702(b) and any applicant delays under 37 CFR 1.704(c)(10) will be calculated at the time of the issuance of the patent and applicants will be notified of the revised patent term adjustment to be indicated on the patent in

the Issue Notification letter that is mailed to applicant approximately three weeks prior to issuance.

The Office of Data Management has been advised of this decision. This application is being referred to the Office of Data Management for issuance of the patent.

Telephone inquiries specific to this decision should be directed to the undersigned at (571) 272-3211.

/Christina Tartera Donnell/

Christina Tartera Donnell
Senior Petitions Attorney
Office of Petitions

UNITED STATES PATENT AND TRADEMARK OFFICE

Commissioner for Patents
United States Patent and Trademark Office
P.O. Box 1450
Alexandria, VA 22313-1450
www.uspto.gov

GOWLING LAFLEUR HENDERSON LLP
SUITE 1600, 1 FIRST CANADIAN PLAE
100 KING STREET WEST
TORONTO ON M5X IG5 CANADA

MAILED
SEP 27 2010
OFFICE OF PETITIONS

In re Application of	:	
Steve Cox	:	
Application No. 11/245,217	:	DECISION ON PETITION
Filed: October 7, 2005	:	
Attorney Docket No. 15272	:	

This is a decision on the petition under the unintentional provisions of 37 CFR 1.137(b), filed June 11, 2010, to revive the above-identified application.

Petitioner also filed a petition under 37 CFR 1.137(a) on June 11, 2010. However, no consideration will be taken on the petition under 37 CFR 1.137(a), as the cause of the delay was due to an avoidable mistake which is not an unavoidable delay matter within the meaning of 37 CFR 1.137(a). Therefore, the petition is dismissed as moot.

The petition under 37 CFR 1.137(b) is **GRANTED**.

The application became abandoned for failure to reply in a timely manner to the nonfinal Office action mailed May 19, 2009. Petitioner asserts that a response was timely submitted on November 19, 2009, to an incorrect facsimile number. A Notice of Abandonment was mailed on April 19, 2010.

37 CFR 1.137(b)(3) requires a statement that "the entire delay in filing the required reply from the due date for the reply until the filing of a grantable petition pursuant to 37 CFR 1.137(b) was unintentional." Since the statement appearing in the petition varies from the language required by 37 CFR 1.137(b)(3), the statement is being construed as the required statement. Petitioner must notify the Office if this is **not** a correct reading of the statement appearing in the petition.

The petition satisfies the conditions for revival pursuant to the provisions of 37 CFR 1.137(b) in that (1) the reply in the form of an amendment; (2) the petition fee; and (3) the required statement of unintentional delay have been received. Accordingly, the reply to the nonfinal Office action mailed May 19, 2009, is accepted as having been unintentionally delayed.

The Office will use the copy of the amendment submitted with the petition on June 11, 2010.

The required petition fee of $1,620.00 is being charged to petitioner's deposit account, as authorization was provided on the copy of the request for extension of time submitted with the instant petition.

An extension of time under 37 CFR 1.136 must be filed prior to the expiration of the maximum extendable period for reply. *See* In re Application of S., 8 USPQ2d 1630, 1631 (Comm'r Pats. 1988). Therefore, no extension fee will be charged.

Telephone inquiries concerning this decision should be directed to the undersigned at (571) 272-3208.

This application is being referred to Technology Center AU 2618 for appropriate action by the Examiner in the normal course of business on the copy of the reply received June 11, 2010.

/KOC/
Karen Creasy
Petitions Examiner
Office of Petitions

UNITED STATES PATENT AND TRADEMARK OFFICE

Commissioner for Patents
United States Patent and Trademark Office
P.O. Box 1450
Alexandria, VA 22313-1450
www.uspto.gov

INTEL/BSTZ
BLAKELY SOKOLOFF TAYLOR & ZAFMAN LLP
1279 OAKMEAD PARKWAY
SUNNYVALE CA 94085-4040

MAILED
NOV 09 2010
OFFICE OF PETITIONS

In re Application of	:	
Udaya SHANKARA	:	
Application No. 11/245,264	:	DECISION ON PETITION
Filed: October 5, 2005	:	
Attorney Docket No. 42P21616	:	

This is a decision on the petition under 37 CFR 1.59(b), filed April 23, 2010, to expunge information from the above identified application.

The petition is **DISMISSED**.

Petitioner requests that a document entitled Amendment and Response to Office Action, connected with EFS ID: 7472020, filed April 22, 2010, be expunged from the record. Petitioner indicates that this response is a duplicate of the document labeled "Amendment", connected with EFS ID: 7468773 unintentionally submitted to the Office.

The information that petitioner requests to expunge is considered to be material to the determination of patentability because the amendment presents arguments that traverse the rejection given by the examiner. The response to an inquiry made to the examiner in charge of this application, Bao G. Tran, indicates that the responses are not duplicates and specifically, that the remarks presented that traverse the examiner's rejections, will be addressed in the next office action on the merits.

Telephone inquiries concerning this communication should be directed to the undersigned at 571-272-0602.

Thurman K. Page
Petitions Examiner
Office of Petitions

UNITED STATES PATENT AND TRADEMARK OFFICE

Commissioner for Patents
United States Patent and Trademark Office
P.O. Box 1450
Alexandria, VA 22313-1450
www.uspto.gov

PHILIP S. JOHNSON
JOHNSON & JOHNSON
ONE JOHNSON & JOHNSON PLAZA
NEW BRUNSWICK NJ 08933-7003

MAILED

JAN 11 2011

OFFICE OF PETITIONS

In re Application of	:	
Huang et al.	:	
Application No. 11/245,314	:	ON APPLICATION FOR
Filed: October 6, 2005	:	PATENT TERM ADJUSTMENT
Attorney Docket No. PRD2292NP	:	

This is in response to the APPLICATION FOR PATENT TERM ADJUSTMENT INCLUDING REQUEST FOR RECONSIDERATION UNDER 37 C.F.R. 1.705(a)-(b), filed September 29, 2010. Applicants submit that the patent term adjustment to be indicated on the patent is one thousand four hundred twenty-one (1421) days, not six hundred thirty-five (635) days as calculated by the Office as of the mailing of the initial determination of patent term adjustment. Applicants request this correction on the basis that the Office will take in excess of three years to issue this patent.

In addition, applicants dispute the length of reduction pursuant to 37 CFR 1.702(a)(1) for Office delay in mailing at least one of a notification under 35 U.S.C. 132 not later than fourteen months after the date on which the application was filed. Applicants argue the period of adjustment should take into account the fact that the first restriction requirement, mailed May 23, 2008, was returned to the Office and that it was re-mailed on December 16, 2008. Applicants argue that the 14 month delay calculation should end on the date the restriction requirement was re-mailed, not on the date the first returned restriction requirement was mailed.

To the extent that applicants request reconsideration of the patent term adjustment as it relates to the Office's failure to issue the patent within 3 years of the filing date, the application for patent term adjustment under 37 CFR 1.705(b) is **DISMISSED as PREMATURE**.

Knowledge of the actual date the patent issues is required to calculate the amount, if any, of additional patent term patentees are entitled to for Office failure to issue the patent within 3 years. See § 1.702(b). The computer will not undertake the § 1.702(b) calculation until the actual date of issuance of the patent has been determined. Likewise, the computer will not calculate any further Office delay under § 1.702(a)(4) or applicant delay under § 1.704(c)(10) until the actual date of issuance of the patent has been determined. As such, the Office cannot make a determination on the correctness of the patent term adjustment until the patent has issued.

Requesting reconsideration of the patent term adjustment to be indicated on the patent under 37 CFR 1.705(b) based on the initial determination of patent term adjustment and a projected issuance date of the patent is premature. Accordingly, it is appropriate to dismiss as premature such a request.

Rather than file an application for patent term adjustment under 37 CFR 1.705(b) contesting the 37 CFR 1.702(b) calculation at the time of the mailing of the notice of allowance, applicants are advised that they may wait until the time of the issuance of the patent and file a request for reconsideration of the patent term adjustment pursuant to 37 CFR 1.705(d). As the USPTO does not calculate the amount of time earned pursuant to 37 CFR 1.702(b) until the time of the issuance of the patent, the Office will consider any request for reconsideration of the patent term adjustment due to an error in the calculation of 37 CFR 1.702(b) to be timely if the request for reconsideration is filed within two months of the issuance of the patent. However, as to all other bases for contesting the initial determination of patent term adjustment received with the notice of allowance, applicants must timely file an application for patent term adjustment prior to the payment of the issue fee.[1]

---

[1] For example, if an applicant disputes both the calculation of patent term adjustment under 37 CFR 1.702(a)(1) for Office failure to mail a first Office action or notice of allowance not later than fourteen months after the date on which the application was filed and under 37 CFR 1.702(b) for Office failure to issue a patent within three years of the actual filing date of the application, then applicant must still timely file an application for patent term adjustment prior to the payment of the issue fee to contest the calculation of Office delay in issuing a first Office action or notice of allowance. See 37 CFR 1.705(b) and 35 U.S.C. 154(b)(3)(B). A dispute as to the calculation of the §1.702(a)(1) period raised on request for reconsideration of patent term adjustment under 37 CFR 1.705(d) will be dismissed as untimely filed.

To the extent that applicants otherwise request correction of the initial determination of patent term adjustment (PTA), the application for patent term adjustment is **GRANTED to the extent indicated herein.**

The Office has updated the PAIR screen to reflect that the correct Patent Term Adjustment (PTA) determination at the time of the mailing of the notice of allowance is seven hundred thirty-eight **(738) days.** A copy of the updated PAIR screen, showing the correct determination, is enclosed.

On June 29, 2010, the Office mailed the Determination of Patent Term Adjustment under 35 U.S.C. 154(b) in the above-identified application. The Notice stated that the patent term adjustment to date is 635 days.

In response, applicants timely[2] filed the instant request for reconsideration of the patent term adjustment. Applicants assert that the Office's delay pursuant to 37 C.F.R. § 1.703(a)(1) should be calculated as 741 days, not 534 days.

The application history has been reviewed and it has been determined that the initial patent term adjustment of 635 days is incorrect. The Office mailed an Office action under § 132 on May 23, 2008, fourteen months and 534 days after the application was filed. The Office action was addressed to the correspondence address of record. On May 30, 2008, the Office action was returned because the envelope was defective. On December 16, 2008, the Office action was re-mailed to applicants and the period for response was re-started from the mail date of the Office action. Applicants filed a response on January 14, 2009.

Applicants maintain that the restriction requirement mailed December 16, 2008 should be used in ascertaining examination delay under 37 CFR 1.702(a)(1).

Applicants' argument is persuasive. The Office action mailed May 23, 2008 was returned to the Office by the postal service because the envelope was defective. Accordingly, another copy of the Office action was mailed on December 16, 2008. The second Office action was received by applicants. The re-mailing appears to be due to an error on the part of the Office in mailing the first Office action to applicants. Thus, the re-

---

[2] PALM Records indicate that the Issue Fee payment was received on September 29, 2010.

mailing of the Office action constituted a delay by the Office. The period of examination delay should be based on the December 16, 2008 date of re-mailing of the Office action. The period of adjustment begins on December 7, 2006, the day after the date that is fourteen months after the application was filed, and ends on December 16, 2008, the date the Office action was re-mailed. Accordingly, the period of adjustment of 534 days is being removed and a period of adjustment of 741 days is being entered.

A review of patent term adjustment calculations for the application has revealed another basis for reduction and, as a result, a modification to an adjustment.

37 CFR 1.704(c)(7) establishes submission of a reply having an omission (37 CFR 1.135(c)) as a circumstance that constitutes a failure of an applicant to engage in reasonable efforts to conclude processing or examination of an application. Submitting a reply having an omission requires the Office to issue an action under 37 CFR 1.135(c) and await and process the applicant's reply to the action under 37 CFR 1.135(c) before the initial reply (as corrected) can be treated on its merits. In addition, 37 CFR 1.704(c)(7) provides that in such a case the period of adjustment set forth in 37 CFR 1.703 shall be reduced by the number of days, if any, beginning on the day after the date the reply having an omission was filed and ending on the date that the reply or other paper correcting the omission was filed.

On January 14, 2009, applicants filed a response to the December 16, 2008 restriction requirement. The January 14, 2009 reply was non-responsive, as explained in the March 19, 2009 communication to applicants. On April 2, 2009, applicants filed an incomplete reply. On April 15, 2009, applicants filed a complete reply in the form of a proper election. Therefore, pursuant to 37 CFR 1.703, a period of reduction of 91 days, beginning on January 15, 2009, the date after the date the reply having an omission was filed, and ending on April 15, 2009, the date the reply correcting the omission was filed, is being entered.

As a complete and proper reply was not filed until April 15, 2009, the Office should be charged only a 157 day reduction in connection with the mailing of the non-final Office action on January 19, 2010.

37 CFR 1.702(a) provides, in pertinent part, that grounds for adjustment of patent term due to examination delay include failure of the Office to:

> (2) Respond to a reply under 35 U.S.C. 132 or to an appeal taken under 35 U.S.C. 134 not later than four months after the date on which the reply was filed or the appeal was taken;

Pursuant to 37 CFR 1.703(a), the period is calculated as follows:

> (2) The number of days, if any, in the period beginning on the day after the date that is four months after the date a reply under § 1.111 was filed and ending on the date of mailing of either an action under 35 U.S.C. 132, or a notice of allowance under 35 U.S.C. 151, whichever occurs first;

Applicants filed a complete reply to the December 16, 2008 restriction requirement on April 15, 2009. The Office mailed the January 19, 2010 non-final Office action four months and 157 days later. The 170 day adjustment is being removed and a 157 day adjustment is being entered in connection with the mailing of the January 19, 2010 non-final Office action.

In view thereof, the determination of patent term adjustment at the time of the mailing of the notice of allowance is **seven hundred thirty-eight (738) days** -- 898 (741 + 157) days of Office delay minus 160 (69 + 91) days of Applicant delay. Please find enclosed the update PAIR calculations for the application.

The Office acknowledges submission of the $200.00 fee set forth in 37 CFR 1.18(e) for consideration of the application for patent term adjustment under 37 CFR 1.705(b).

Any request for reconsideration of the patent term adjustment indicated on the patent must be timely filed within 2 months after issuance pursuant to 37 CFR 1.705(d) and must include payment of the required fee under 37 CFR 1.18(e).

The Office of Data Management has been advised of this decision. This application is being referred to the Office of Data Management for issuance of the patent.

Telephone inquiries specific to this decision should be directed to the undersigned at (571) 272-3230.

Shirene Willis Brantley

Shirene Willis Brantley
Senior Petitions Attorney
Office of Petitions

Enclosure: copy of updated PAIR screen for Application no. 11/245,314

Patent eBusiness

- Electronic Filing
- Patent Application Information (PAIR)
- Patent Ownership
- Fees
- Supplemental Resources & Support

Patent Information

- Patent Guidance and General Info
- Codes, Rules & Manuals
- Employee & Office Directories
- Resources & Public Notices

Patent Searches

- Patent Official Gazette
- Search Patents & Applications
- Search Biological Sequences
- Copies, Products & Services

Other

- Copyrights
- Trademarks
- Policy & Law
- Reports

Patent Application Information Retrieval

Order Certified Application As Filed Order Certified File Wrapper View Order List

11/245,314 1,2,4-TRIAZOLYLAMINOARYL (HETEROARYL) SULFONAMIDE DERIVATIVES

Select New Case | Application Data | Transaction History | Image File Wrapper | Patent Term Adjustments | Continuity Data | Published Documents | Address & Attorney/Agent

Patent Term Adjustment

Filing or 371(c) Date:	10-06-2005	Overlapping Days Between {A and B} or {A and C}:	0
Issue Date of Patent:	-	Non-Overlapping USPTO Delays:	704
A Delays:	704	PTO Manual Adjustments:	103
B Delays:	0	Applicant Delays:	69
C Delays:	0	Total PTA Adjustments:	738

Patent Term Adjustment History **Explanation Of Calculations**

Number	Date	Contents Description	PTO (Days)	APPL (Days)	Start
60	11-19-2010	Adjustment of PTA Calculation by PTO	103		0
51	06-29-2010	Mail Notice of Allowance			0
50	06-23-2010	Document Verification			0
49	06-23-2010	Notice of Allowance Data Verification Completed			0
48	06-23-2010	Case Docketed to Examiner in GAU			0
47	06-21-2010	Notice of Allowability			0
44	05-04-2010	Date Forwarded to Examiner			0
43	04-19-2010	Response after Non-Final Action			0
42	01-19-2010	Electronic Review			0
41	01-19-2010	Email Notification			0
40	01-19-2010	Mail Non-Final Rejection	170		33
39	01-14-2010	Non-Final Rejection			0
35	12-01-2009	Case Docketed to Examiner in GAU			0
34	11-10-2009	Date Forwarded to Examiner			0
33	04-02-2009	Response after Non-Final Action			0
32	03-19-2009	Mail Miscellaneous Communication to Applicant			0
31	03-16-2009	Miscellaneous Action with SSP			0
30	10-06-2005	Information Disclosure Statement considered			0
29	07-24-2006	Information Disclosure Statement considered			0
28	11-20-	Information Disclosure Statement considered			0

	2006				
27	02-24-2009	Date Forwarded to Examiner			0
26	01-14-2009	Response to Election / Restriction Filed			0
25	12-16-2008	Mail Notice of Restarted Response Period			0
24	12-12-2008	Letter Restarting Period for Response (i.e. Letter re: References)			0
23	05-23-2008	Mail Restriction Requirement	534		-1
22	05-22-2008	Requirement for Restriction / Election			0
20.7	11-20-2006	Information Disclosure Statement (IDS) Filed			0
20	11-20-2006	Information Disclosure Statement (IDS) Filed			0
17	09-07-2006	Case Docketed to Examiner in GAU			0
16	08-01-2006	IFW TSS Processing by Tech Center Complete			0
15.7	07-24-2006	Information Disclosure Statement (IDS) Filed			0
15	07-24-2006	Information Disclosure Statement (IDS) Filed			0
14.7	10-06-2005	Information Disclosure Statement (IDS) Filed			0
14	10-06-2005	Information Disclosure Statement (IDS) Filed			0
13	07-24-2006	Reference capture on IDS			0
12	04-21-2006	Application Return from OIPE			0
11	04-21-2006	Application Is Now Complete			0
10	04-21-2006	Application Return TO OIPE			0
9	04-21-2006	Application Dispatched from OIPE			0
8	04-21-2006	Application Is Now Complete			0
7	04-11-2006	Additional Application Filing Fees		69	5
6	04-11-2006	A statement by one or more inventors satisfying the requirement under 35 USC 115, Oath of the Applic			0
5	11-01-2005	Notice Mailed--Application Incomplete--Filing Date Assigned			0
3	10-27-2005	Cleared by OIPE CSR			0
2	10-17-2005	IFW Scan & PACR Auto Security Review			0
1	10-06-2005	Initial Exam Team nn			0

If you need help:

- *Call the Patent Electronic Business Center at (866) 217-9197 (toll free) or e-mail EBC@uspto.gov for specific questions about Patent Application Information Retrieval (PAIR).*
- *Send general questions about USPTO programs to the USPTO Contact Center (UCC).*
- *If you experience technical difficulties or problems with this application, please report them via e-mail to Electronic Business Support or call 1 800-786-9199.*

You can suggest USPTO webpages or material you would like featured on this section by E-mail to the webmaster@uspto.gov. While we cannot promise to accommodate all requests, your suggestions will be considered and may lead to other improvements on the website.

Doc Code: PET.RELIEF
Document Description: Certification and Request for Disaster Relief

PTO/SB/425 (03-11)

CERTIFICATION AND REQUEST FOR RELIEF DUE TO EVENTS OF MARCH 11, 2011, IN JAPAN (Page 1 of 2)

Nonprovisional Application Number or Control Number (if applicable): 11/245,491	Patent Number (if applicable):
First Named Inventor: Ryoji INABA et al.	Title of Invention: ELECTROPHORESIS APPARATUS

APPLICANT/PATENTEE/REEXAMINATION PARTY HEREBY CERTIFIES AND REQUESTS THE FOLLOWING FOR THE ABOVE-IDENTIFIED APPLICATION/PATENT/REEXAMINATION PROCEEDING.

1. FOR PATENT APPLICATIONS AND REEXAMINATION PROCEEDINGS PENDING IN THE USPTO AS OF MARCH 11, 2011, IN WHICH A COMMUNICATION FROM THE USPTO IS SOUGHT TO BE REMAILED:

   a. One or more inventors, an assignee, or a correspondence address (for the application/proceeding) is in an area of Japan affected by the earthquake and/or tsunami of March 11, 2011.

   b. A reply or response to an Office action (final, non-final, or other), a notice of allowance, or other Office notice (hereinafter collectively referred to as "Office communication") is outstanding on March 11, 2011.

   c. The statutory or non-statutory time period set for response has not yet expired.

   d. Withdrawal and reissuance of the Office communication is requested.

   e. It is acknowledged that if this request is not made within sufficient time so that withdrawal and reissuance of the Office communication occur prior to expiration of the statutory or non-statutory time period (as permitted to be extended under 37 CFR 1.136(a), or as extended under 37 CFR 1.550(c) or 1.956), this request may not be granted.

   f. The need for the reissuance of the Office communication was due to the effects of the earthquake and/or tsunami of March 11, 2011.

   g. This request is being sent via EFS-Web or by mail directed to Mail Stop Petition, Commissioner for Patents, P.O. Box 1450, Alexandria, VA 22313-1450.

2. FOR PATENTEES WHO WERE UNABLE TO TIMELY PAY A PATENT MAINTENANCE FEE DURING THE SIX-MONTH GRACE PERIOD FOLLOWING THE WINDOW TO PAY THE MAINTENANCE FEE:

   a. The original window of time to pay the maintenance fee without the surcharge required by 37 CFR 1.20(h) expired on or after March 11, 2011.

   b. The delay in paying the fee was due to the effects of the earthquake and/or tsunami of March 11, 2011.

   c. The USPTO is requested to *sua sponte* waive the surcharge in 37 CFR 1.20(h) for paying a maintenance fee during the six-month grace period following the window to pay the maintenance fee.

   d. This request and payment of the maintenance fee during the six-month grace period following the window to pay the maintenance fee is being mailed to: Director of the United States Patent and Trademark Office, Attn: Maintenance Fee, 2051 Jamieson Avenue, Suite 300, Alexandria, VA 22314; or being transmitted via facsimile to: 571-273-6500.

CERTIFICATION AND REQUEST FOR RELIEF DUE TO EVENTS OF MARCH 11, 2011, IN JAPAN (Page 2 of 2)

3. FOR PATENTEES WHO NEED TO FILE A PETITION TO ACCEPT A DELAYED MAINTENANCE FEE PAYMENT UNDER 37 CFR 1.378(c):

   a. The maintenance fee payment was required to have been paid after March 10, 2011.

   b. A petition under 37 CFR 1.378(c) (using USPTO form PTO/SB/66 – Petition to Accept Unintentionally Delayed Payment of Maintenance Fee in an Expired Patent (37 CFR 1.378(c))) is being promptly filed accompanied by the applicable maintenance fee payment (but not the surcharge under 37 CFR 1.20(i)).

   c. The delay in payment of the maintenance fee was due to the effects of the earthquake and/or tsunami of March 11, 2011.

   d. The USPTO is requested to *sua sponte* waive the surcharge in 37 CFR 1.20(i) for accepting a delayed maintenance fee payment.

   e. It is acknowledged that the petition to accept a delayed maintenance fee payment under 37 CFR 1.378(c) must be filed by March 11, 2012, in order to be entitled to a waiver of the surcharge under 37 CFR 1.20(i).

   f. It is acknowledged that the petition to accept a delayed maintenance fee payment under 37 CFR 1.378(c) must be filed within twenty-four months from the expiration date of the patent. *See* 35 U.S.C 41(c).

   g. This request and the petition to accept a delayed maintenance fee payment under 37 CFR 1.378(c) is being submitted via EFS-Web or by mail directed to Mail Stop Petition, Commissioner for Patents, P.O. Box 1450, Alexandria, VA 22313-1450.

4. FOR NONPROVISIONAL PATENT APPLICATIONS FILED WITHOUT AN EXECUTED OATH OR DECLARATION OR PAYMENT OF THE BASIC FILING FEE, SEARCH FEE, AND/OR EXAMINATION FEE:

   a. The nonprovisional patent application was filed on or after March 11, 2011, and prior to April 12, 2011.

   b. The late filing of the oath or declaration or the basic filing fee, search fee, or examination fee was due to the effects of the earthquake and/or tsunami of March 11, 2011.

   c. The USPTO is requested to *sua sponte* waive the surcharge set forth in 37 CFR 1.16(f) for the late filing of the oath or declaration or basic filing fee, search fee, and/or examination fee.

   d. This request, together with the executed oath or declaration or the basic filing fee, search fee, or examination fee, as well as the reply to the Notice to File Missing Parts, is being submitted via EFS-Web or by mail directed to Mail Stop Missing Parts, Commissioner for Patents, P.O. Box 1450, Alexandria, VA 22313-1450.

Signature Keith E. George	Date May 20, 2011
Name (Print/Typed) Keith E. George	Practitioner Registration Number 34,111

Note: *Signatures of all the inventors, § 1.41(b) applicants, or assignees of record of the entire interest or their representative(s), or reexamination requesters at the appeal stage are required in accordance with 37 CFR 1.33 and 11.18. Please see 37 CFR 1.4(d) for the form of the signature. If necessary, submit multiple forms for more than one signature, see below*.*

■ *Total of 1 forms are submitted.

UNITED STATES PATENT AND TRADEMARK OFFICE

Commissioner for Patents
United States Patent and Trademark Office
P.O. Box 1450
Alexandria, VA 22313-1450
www.uspto.gov

MCDERMOTT WILL & EMERY LLP
600 13TH STREET, N.W.
WASHINGTON DC 20005-3096

MAILED
MAY 25 2011
OFFICE OF PETITIONS

In re Application of	:	
Inaba et al.	:	
Application No. 11/245,491	:	DECISION ON PETITION
Filed: October 7, 2005	:	
Attorney Docket No. 062807-0285	:	

This is a decision on the request filed May 20, 2011, seeking relief under the provisions of "Relief Available to Patent and Trademark Applicants, Patentees and Trademark Owners Affected by the Catastrophic Events of March 11, 2011 in Japan," 1365 Off. Gaz. Pat. Office 170 (April 19, 2011).

The request for relief is **GRANTED**.

In the above-identified application, an Office action was mailed on January 6, 2011. The instant petition was filed prior to the expiration of the period for reply and the certifications for granting of relief are considered to be met by the submission of the request.

Telephone inquires concerning this decision should be directed to the undersigned at 571-272-7751. All other inquires concerning either the examination or status of the application should be directed to the Technology Center.

This application is being referred to the Technology Center, Art Unit 1759 for re-mailing the Office action of January 6, 2011. The period for reply will run from the mailing date of the Office action.

/Joan Olszewski/
Joan Olszewski
Petitions Examiner
Office of Petitions

UNITED STATES PATENT AND TRADEMARK OFFICE

Commissioner for Patents
United States Patent and Trademark Office
P.O. Box 1450
Alexandria, VA 22313-1450
www.uspto.gov

KILPATRICK TOWNSEND & STOCKTON LLP
TWO EMBARCADERO CENTER
EIGHTH FLOOR
SAN FRANCISCO CA 94111-3834

MAILED

NOV 21 2011

OFFICE OF PETITIONS

In re Application of	:	
BACHENHEIMER	:	
Application No. 11/245,502	:	DECISION ON PETITION
Filed: October 7, 2005	:	TO WITHDRAW
Attorney Docket No. 90308-704010 (000100US)	:	FROM RECORD
	:	

This is a decision on the Request to Withdraw as attorney or agent of record under 37 C.F.R. § 1.36(b), filed October 27, 2011.

The request is **NOT APPROVED** because it is moot.

A review of the file record indicates that the power of attorney to Christopher L. Willink, has been revoked by the assignee of the patent application on November 14, 2011. Accordingly, the request to withdraw under 37 C.F.R. § 1.36(b) is moot.

Telephone inquiries concerning this decision should be directed to undersigned at (571) 272-6735.

/Diane Goodwyn/
Diane Goodwyn
Petitions Examiner
Office of Petitions

cc: KEMESA LLC
3201 NE 183RD STREET
SUITE 1502
AVENTURA FL 33160

UNITED STATES PATENT AND TRADEMARK OFFICE

UNITED STATES DEPARTMENT OF COMMERCE
United States Patent and Trademark Office
Address: COMMISSIONER FOR PATENTS
P.O. Box 1450
Alexandria, Virginia 22313-1450
www.uspto.gov

APPLICATION NUMBER	FILING OR 371(C) DATE	FIRST NAMED APPLICANT	ATTY. DOCKET NO./TITLE
11/245,502	10/07/2005	Steven I. Bachenheimer	90308-704010 (000100US)

CONFIRMATION NO. 5253

POWER OF ATTORNEY NOTICE

20350
KILPATRICK TOWNSEND & STOCKTON LLP
TWO EMBARCADERO CENTER
EIGHTH FLOOR
SAN FRANCISCO, CA 94111-3834

OC000000051013773

Date Mailed: 11/17/2011

NOTICE REGARDING CHANGE OF POWER OF ATTORNEY

This is in response to the Power of Attorney filed 11/14/2011.

- The Power of Attorney to you in this application has been revoked by the assignee who has intervened as provided by 37 CFR 3.71. Future correspondence will be mailed to the new address of record(37 CFR 1.33).

/dcgoodwyn/

Office of Data Management, Application Assistance Unit (571) 272-4000, or (571) 272-4200, or 1-888-786-0101

UNITED STATES PATENT AND TRADEMARK OFFICE

UNITED STATES DEPARTMENT OF COMMERCE
United States Patent and Trademark Office
Address: COMMISSIONER FOR PATENTS
P.O. Box 1450
Alexandria, Virginia 22313-1450
www.uspto.gov

APPLICATION NUMBER	FILING OR 371(C) DATE	FIRST NAMED APPLICANT	ATTY. DOCKET NO./TITLE
11/245,502	10/07/2005	Steven I. Bachenheimer	90308-704010 (000100US)

CONFIRMATION NO. 5253

POA ACCEPTANCE LETTER

45486
ROBERT M. DOWNEY, P.A.
6751 N. FEDERAL HWY., SUITE 300
BOCA RATON, FL 33487

OC000000051013779

Date Mailed: 11/17/2011

NOTICE OF ACCEPTANCE OF POWER OF ATTORNEY

This is in response to the Power of Attorney filed 11/14/2011.

The Power of Attorney in this application is accepted. Correspondence in this application will be mailed to the above address as provided by 37 CFR 1.33.

/dcgoodwyn/

Office of Data Management, Application Assistance Unit (571) 272-4000, or (571) 272-4200, or 1-888-786-0101

UNITED STATES PATENT AND TRADEMARK OFFICE

Commissioner for Patents
United States Patent and Trademark Office
P.O. Box 1450
Alexandria, VA 22313-1450
www.uspto.gov

MAILED

NOV 26 2010

OFFICE OF PETITIONS

SALIWANCHIK LLOYD & SALIWANCHIK
A PROFESSIONAL ASSOCIATION
PO Box 142950
GAINESVILLE FL 32614

In re Patent No. 7,705,040 :
Issue Date: April 27, 2010 :
Application No. 11/245,529 : DECISION ON PETITION
Filed: October 7, 2005 :
Attorney Docket No. UHK.00198 :

This is a decision on the Petition Under 37 CFR §3.81 and Request For Certificate Of Correction 37 CFFR 1.323 (Applicant Mistake), filed September 22, 2010, to identify the correct assignee's name. A completed Certificate of Correction Form was submitted with Petition.

The petition under 37 CFR §3.81(b) is **GRANTED**.

Petitioner urges that the present Petition was submitted to correct the assignee's name on the previously submitted PTOL 85B and such error was applicant's mistake. Accordingly, petitioner requests, in effect, that the Title Page of the above-identified patent be corrected, via issuance of Certificate of Correction, to correct the assignee's name identified thereon from:

"The University of Hong Kong"

to:

--Versitech Limited--

37 CFR 3.81(b), effective June 25, 2004, reads:

> *After payment of the issue fee:* Any request for issuance of an application in the name of the assignee submitted after the date of payment of the issue fee, and any request for a patent to be corrected to state the name of the assignee, must state that the assignment was submitted for recordation as set forth in § 3.11 before issuance of the patent, and must include a request for a certificate of correction under § 1.323 of this chapter (accompanied by the fee set forth in § 1.20(a) and the processing fee set forth in § 1.17(i) of this chapter.

The requisite $100.00 fee (Fee Code 1811), as set forth under 37 CFR 1.20(a), and the requisite $400.00 petition fee (Fee Code 1462), as set forth under 37 CFR 1.17(f) have been submitted. However, a requisite $130.00 processing fee (Fee Code 1464), as set forth under 37 CFR 1.17(i), is required. Therefore, the remaining $270.00 will be credited to petitioner's deposit account. Further, Office assignment records are consistent with the requested correction. Accordingly, since the Petition complies with the provisions of 37 CFR 3.81(b), it is appropriate for the Office to issue a Certificate of Correction in accordance with the content of the Form submitted with the Petition.

Inquiries related this communication should be directed to the undersigned at (571)272-3213.

Any questions concerning the issuance of a Certificate of Correction should be directed to the Certificates of Correction Branch at (571) 272-4200.

This matter is being referred to the Certificates of Correction Branch for processing of a Certificate of Correction in U.S. Patent No. 7,705,040.

Cheryl Gibson-Baylor

Cheryl Gibson-Baylor
Petitions Examiner
Office of Petitions

UNITED STATES PATENT AND TRADEMARK OFFICE

Commissioner for Patents
United States Patent and Trademark Office
P.O. Box 1450
Alexandria, VA 22313-1450
www.uspto.gov

WILSON, SONSINI, GOODRICH & ROSATI
650 PAGE MILL ROAD
PALO ALTO CA 94304-1050

MAILED
APR 20 2011
OFFICE OF PETITIONS

In re Application of	:	
William M. Pardridge, et al.	:	
Application No. 11/245,546	:	DECISION GRANTING PETITION
Filed: October 7, 2005	:	UNDER 37 CFR 1.313(c)(2)
Attorney Docket No. 28570-701.201	:	

This is a decision on the petition under 37 CFR 1.313(c)(2), filed April 19, 2001, to withdraw the above-identified application from issue after payment of the issue fee.

The petition is **GRANTED**.

The above-identified application is withdrawn from issue for consideration of a submission under 37 CFR 1.114 (request for continued examination). *See* 37 CFR 1.313(c)(2).

Petitioner is advised that the issue fee paid on April 7, 2011 cannot be refunded. If, however, this application is again allowed, petitioner may request that it be applied towards the issue fee required by the new Notice of Allowance.[1]

Telephone inquiries concerning this decision should be directed to undersigned at (571) 272-1642. All other inquiries concerning the examination or status of this application should be directed to the Technology Center.

This application is being referred to Technology Center AU 1649 for processing of the request for continued examination under 37 CFR 1.114 and for consideration of the concurrently filed information disclosure statement.

/AMW/
April M. Wise
Petitions Examiner
Office of Petitions

---

[1] *The request to apply the issue fee to the new Notice may be satisfied by completing and returning the new Part B – Fee(s) Transmittal Form (along with any balance due at the time of submission). Petitioner is advised that the Issue Fee Transmittal Form must be completed and timely submitted to avoid abandonment of the application.*

UNITED STATES PATENT AND TRADEMARK OFFICE

Commissioner for Patents
United States Patent and Trademark Office
P.O. Box 1450
Alexandria, VA 22313-1450
www.uspto.gov

NUTTER MCCLENNEN & FISH LLP
SEAPORT WEST
155 SEAPORT BOULEVARD
BOSTON MA 02210-2604

MAILED
AUG 03 2010
OFFICE OF PETITIONS

In re Application of	:	
Stojanovic-Susulic, et al.	:	
Application No. 11/245,653	:	ON REQUEST FOR
Filed: October 7, 2005	:	RECONSIDERATION OF
Attorney Docket Number: 22719-69	:	PATENT TERM ADJUSTMENT

This is a decision on the petition under 37 CFR 1.705(b), filed January 21, 2010. Applicants believe that they should be accorded an additional PTA of 289 days. Applicants request this correction solely on the basis that the Office will take in excess of three years to issue this patent.

As the instant application for patent term adjustment requests reconsideration of the patent term adjustment solely as it relates to the Office's failure to issue the patent within 3 years of the filing date, the application for patent term adjustment under 37 CFR 1.705(b) is **DISMISSED as PREMATURE**.

Knowledge of the actual date the patent issues is required to calculate the amount, if any, of additional patent term patentee is entitled to for Office failure to issue the patent within 3 years. See § 1.702(b). (This is true even where a request for continued examination (RCE) was filed). The computer will not undertake the § 1.702(b) calculation until the actual date of issuance of the patent has been determined. Likewise, the computer will not calculate any further Office delay under § 1.702(a)(4) or applicant delay under § 1.704(c)(10) until the actual date of issuance of the patent has been determined. As such, the Office can not make a determination on the correctness of the patent term adjustment until the patent has issued.

Requesting reconsideration of the patent term adjustment to be indicated on the patent under 37 CFR 1.705(b) based on the initial determination of patent term adjustment and a projected issuance date of the patent (or even the filing date of the request for continued examination) is premature. Accordingly, it is appropriate to dismiss as premature such a request.

Rather than file a request for reconsideration of patent term adjustment under 37 CFR 1.705(b) contesting the 37 CFR 1.702(b) calculation at the time of the mailing of the notice of allowance, applicants are advised that they may wait until the time of the issuance of the patent and file a request for reconsideration of the patent term adjustment pursuant to 37 CFR 1.705(d). As the USPTO does not calculate the amount of time earned pursuant to 37 CFR 1.702(b) until the time of the issuance of the patent, the Office will consider any request for reconsideration of the patent term adjustment due to an error in the calculation of 37 CFR 1.702(b) to be timely if the request for reconsideration is filed within two months of the issuance of the patent. However, as to all other bases for contesting the initial determination of patent term adjustment received with the notice of allowance, applicant must timely file an application for patent term adjustment prior to the payment of the issue fee[1].

In view thereof, the correct determination of PTA prior to issuance is **two hundred twenty-two (222) days** (364 days of PTO delay, reduced by 142 days of Applicant delay).

Receipt of the $200.00 fee set forth in 37 CFR 1.18(e) is acknowledged.

The application is being forwarded to the Office of Data Management for issuance of the patent.

Telephone inquiries specific to this decision should be directed to Petitions Attorney Cliff Congo at (571) 272-3207.

Anthony Knight
Director
Office of Petitions

[1] For example, if applicant disputes both the calculation of patent term adjustment under 37 CFR 1.702(a)(1) for Office failure to mail a first Office action or notice of allowance not later than fourteen months after the date on which the application was filed and under 37 CFR 1.702(b) for Office failure to issue a patent within three years of the actual filing date of the application, then applicant must still timely file an application for patent term adjustment prior to the payment of the issue fee to contest the calculation of Office delay in issuing a first Office action or notice of allowance. See 37 CFR 1.705(b) and 35 U.S.C. 154(b)(3)(B). A dispute as to the calculation of the §1.702(a)(1) period raised on request for reconsideration of patent term adjustment under 37 CFR 1.705(d) will be dismissed as untimely filed.

UNITED STATES PATENT AND TRADEMARK OFFICE

UNITED STATES DEPARTMENT OF COMMERCE
United States Patent and Trademark Office
Address: COMMISSIONER FOR PATENTS
P.O. Box 1450
Alexandria, Virginia 22313-1450
www.uspto.gov

APPLICATION NO.	FILING DATE	FIRST NAMED INVENTOR	ATTORNEY DOCKET NO.	CONFIRMATION NO.
11/245,670	10/07/2005	Armin Schmiegel	201638-1 (30017-127)	4794

76656 7590 09/30/2010
Patent Docket Department
Armstrong Teasdale LLP
7700 Forsyth Boulevard
Suite 1800
St. Louis, MO 63105

EXAMINER
THIRUGNANAM, GANDHI

ART UNIT	PAPER NUMBER
2624	

NOTIFICATION DATE	DELIVERY MODE
09/30/2010	ELECTRONIC

Please find below and/or attached an Office communication concerning this application or proceeding.

The time period for reply, if any, is set in the attached communication.

Notice of the Office communication was sent electronically on above-indicated "Notification Date" to the following e-mail address(es):

USpatents@armstrongteasdale.com

UNITED STATES PATENT AND TRADEMARK OFFICE

Commissioner for Patents
United States Patent and Trademark Office
P.O. Box 1450
Alexandria, VA 22313-1450
www.uspto.gov

Patent Docket Department
Armstrong Teasdale LLP
7700 Forsyth Boulevard
Suite 1800
St. Louis MO 63105

MAIL

SEP 3 0 2010

DIRECTOR'S OFFICE
TECHNOLOGY CENTER 2600

In re Application of :
Schmiegel, Armin *et al* :
Serial No.: 11/245,670 :
Filed: October 7, 2005 : DECISION ON PETITION
For: **METHOD FOR DETERMINING THE CHANGE IN POSITION OF AN OBJECT IN AN ITEM OF LUGGAGE** : *ACCEPTANCE OF COLOR DRAWINGS*

This is a decision on the petition under 37 CFR §1.184(a)(2), filed October 7, 2005 requesting acceptance color drawings.

The petition requests that the color drawings identified in Figures 1a, 1b, 2, 3 and 4 be accepted in lieu of black and white drawings.

A grantable petition under 37 C.F.R. §1.84(a)(2) must be accompanied by a fee set forth under 37 C.F.R. § 1.17(h), 3 (three) sets of the color drawings in question, and the specification must contain, or be amended to contain, the following language as the first paragraph in that portion of the specification relating to the brief description of the drawings:

"The file of this patent contains at least one drawing executed in color. Copies of this patent with color drawing(s) will be provided by the Patent and Trademark Office upon request and payment of the necessary fee."

The petition is **GRANTED**.

Doris To
Special Program Examiner
Technology Center 2600
Communications

SPE RESPONSE FOR CERTIFICATE OF CORRECTION

Paper No.: 01112012

DATE : 1/11/12

TO SPE OF : ART UNIT: 2871

SUBJECT : Request for Certificate of Correction for Appl. No.: 11/245,720 Patent No. 7,872,717

CofC mailroom date 1/5/12

Please respond to this request for a certificate of correction within 7 days.

FOR IFW FILES:

Please review the requested changes/corrections as shown in the **COCIN** document(s) in the IFW application image. No new matter should be introduced, nor should the scope or meaning of the claims be changed.

Please complete the response (see below) and forward the completed response to scanning using document code **COCX**.

FOR PAPER FILES:

Please review the requested changes/corrections as shown in the attached certificate of correction. Please complete this form (see below) and forward it with the file to:

Certificates of Correction Branch (CofC)
Randolph Square – 9D10-A
Palm Location 7580

Ernest C. White, LIE

Certificates of Correction Branch

703-756-1814

Thank You For Your Assistance

The request for issuing the above-identified correction(s) is hereby:

Note your decision on the appropriate box.

- ☑ **Approved** — **All** changes apply.
- ☐ **Approved in Part** — Specify below which changes **do not** apply.
- ☐ **Denied** — State the reasons for denial below.

Comments:

/Edward Glick/ — **SPE**

2882 — **Art Unit**

UNITED STATES PATENT AND TRADEMARK OFFICE

Commissioner for Patents
United States Patent and Trademark Office
P.O. Box 1450
Alexandria, VA 22313-1450
www.uspto.gov

MAILED

OCT 01 2010

OFFICE OF PETITIONS

DONN K. HARMS
PATENT & TRADEMARK LAW CENTER
SUITE 100
12702 VIA CORTINA
DEL MAR CA 92014

In re Application of	:	
Robert Joseph MEYER	:	
Application No. 11/245,728	:	DECISION ON PETITION
Filed: October 6, 2005	:	
Attorney Docket No. 3346-PAT	:	

This is a decision on the petition under the unintentional provisions of 37 CFR 1.137(b), filed August 23, 2010, to revive the above-identified application.

The petition is **GRANTED**.

This application became abandoned as a result of petitioner's failure to file a complete and proper reply to the Office communication mailed, May 29, 2009, which set a period for reply of one (1) month. No extensions of time under the provisions of 37 CFR 1.136(a) were obtained. Accordingly, the application became abandoned on June 30, 2009.

The petition satisfies the requirements of 37 CFR 1.137(b) in that petitioner has supplied (1) a reply in the form of an amendment and election (2) the petition fee of $810; and (3) the required statement of unintentional delay.

Telephone inquiries concerning this decision should be directed to the undersigned at (571) 272-6735.

This application is being referred to Technology Center 3751 for appropriate action by the Examiner in the normal course of business.

/DCG/
Diane C. Goodwyn
Petitions Examiner
Office of Petitions

UNITED STATES PATENT AND TRADEMARK OFFICE

Commissioner for Patents
United States Patent and Trademark Office
P.O. Box 1450
Alexandria, VA 22313-1450
www.uspto.gov

CARR & FERRELL LLP
120 CONSTITUTION DRIVE
MENLO PARK CA 94025

MAILED

JAN 27 2011

OFFICE OF PETITIONS

In re Application of	:	
Martin Kloiber et al.	:	
Application No. 11/245,772	:	DECISION ON PETITION
Filed: October 6, 2005	:	
Attorney Docket No. **PA5023US**	:	

This is a decision on the petition, filed August 20, 2010, which is being treated as a petition under 37 CFR 1.8(b), requesting withdrawal of the holding of abandonment in the above-identified application.

The petition is **GRANTED**.

This application was held abandoned for failure to timely respond to the non-final Office action of October 22, 2010, which set a three (3) month shortened statutory period for reply. A Notice of Abandonment was mailed on July 20, 2010.

Petitioner states that a timely reply (Amendment) with a three (3) months extension of time was mailed via certificate of mailing on April 22, 2010, which included the following papers: Amendment with a three (3) months extension of time. Petitioner has submitted a copy of the previously mailed correspondence, which bears a certificate of mailing dated April 22, 2010, which would have rendered the reply timely if received.

The file record does not include the originally submitted papers. Failure to receive correspondence which includes a certificate of mailing or certificate of facsimile transmission is addressed in 37 CFR 1.8(b), reproduced below:

> In the event that correspondence is considered timely filed by being mailed or transmitted in accordance with paragraph (a) of this section, but not received in the U.S. Patent and Trademark Office after a reasonable amount of time has elapsed from the time of mailing or transmitting of the correspondence, or after the application is held to be abandoned, or after the proceeding is dismissed, terminated, or decided with prejudice, the correspondence will be considered timely if the party who forwarded such correspondence:

(1) Informs the Office of the previous mailing or transmission of the correspondence promptly after becoming aware that the Office has no evidence of receipt of the correspondence;

(2) Supplies an additional copy of the previously mailed or transmitted correspondence and certificate; and

(3) Includes a statement which attests on a personal knowledge basis or to the satisfaction of the Director to the previous timely mailing or transmission. If the correspondence was sent by facsimile transmission, a copy of the sending unit's report confirming transmission may be used to support this statement.

The petition satisfies the above requirements of 37 CFR 1.8(b). Accordingly, the holding of abandonment for failure to timely file a reply to the non-final Office action of October 22, 2009, is hereby withdrawn and the application restored to pending status.

The copy of the reply received with the petition will be accepted in place of the reply shown to have been mailed (or transmitted by facsimile) on April 22, 2010.

This application is being referred to Technology Center AU 2614 for appropriate action in the normal course of business on the reply received with petition.

Ramesh Krishnamurthy

Ramesh Krishnamurthy
Petitions Examiner
Office of Petitions

UNITED STATES PATENT AND TRADEMARK OFFICE

Commissioner for Patents
United States Patent and Trademark Office
P.O. Box 1450
Alexandria, VA 22313-1450
www.uspto.gov

OLIVER STRIMPEL, PATENT COUNSEL
AVID TECHNOLOGY, INC.
75 NETWORK DRIVE
BURLINGTON, MA 01803

MAILED

NOV 21 2011

OFFICE OF PETITIONS

In re Application of :
Martin KLOIBER et al. :
Application No. 11/245,772 :
Filed : October 6, 2005 :
Attorney Docket No. A2004022(2) :

DECISION ON PETITION

This is a decision on the petition under 37 CFR 1.137(b), filed November 4, 2011, to revive the above-identified application.

The petition is **DISMISSED**.

Any request for reconsideration of this decision must be submitted within TWO (2) MONTHS from the mail date of this decision. Extensions of time under 37 CFR 1.136(a) are permitted. The reconsideration request should include a cover letter entitled "Renewed Petition under 37 CFR 1.137(b)." This is **not** a final agency action within the meaning of 5 U.S.C. § 704.

The above-identified application became abandoned for failure to reply within the meaning of 37 CFR 1.113 in a timely manner to the final Office action mailed March 25, 2011, which set a shortened statutory period for reply of three (3) months. No extensions of time under the provisions of 37 CFR 1.136(a) were obtained. Accordingly, the above-identified application became abandoned on June 26, 2011.

A grantable petition under 37 CFR 1.137(b) must be accompanied by: (1) the required reply, unless previously filed; (2) the petition fee as set forth in 37 CFR 1.17(m); (3) a statement that the entire delay in filing the required reply from the due date for the reply until the filing of a grantable petition pursuant to 37 CFR 1.137(b) was unintentional; and (4) any terminal disclaimer (and fee as set forth in 37 CFR 1.20(d)) required by 37 CFR 1.137(d). Where there is a question as to whether either the abandonment or the delay in filing a petition under 37 CFR 1.137 was unintentional, the Commissioner may require additional information. See MPEP 711.03(c)(III)(C) and (D). The instant petition lacks item(s) (3). The instant renewed petition includes a statement that the entire delay from September 25, 2011 (last due date for submitting Applicants' responsive Amendment with maximum extension of time) to November 4, 2011

(date the instant petition was filed) was unintentional. However, no extension of time was requested so the due date for the reply was June 25, 2011.

Telephone inquiries concerning this decision should be directed to Joanne Hama at (571) 272-2911 or in her absence, David A. Bucci at (571) 272-7099.

The application file is being referred to Technology Center AU 2614 for appropriate action on the concurrently filed amendment.

David Bucci
Petitions Examiner
Office of Petitions

UNITED STATES PATENT AND TRADEMARK OFFICE

Commissioner for Patents
United States Patent and Trademark Office
P.O. Box 1450
Alexandria, VA 22313-1450
www.uspto.gov

MAILED

JAN 05 2012

OFFICE OF PETITIONS

OLIVER STRIMPLE, PATENT COUNSEL
AVID TECHNOLOGY, INC.
75 NETWORK DRIVE
BURLINGTON, MA 01803

In re Application of	:	
Martin KLOIBER et al.	:	
Application No.: 11/245,772	:	DECISION ON PETITION
Filed: October 6, 2001	:	
Attorney Docket No.: A2004022(2)	:	

This is a decision on the renewed petition under 37 CFR 1.137(b), filed November 29, 2011, to revive the above-identified application.

The petition is **GRANTED**.

The above-identified application became abandoned for failure to reply within the meaning of 37 CFR 1.113 in a timely manner to the final Office action mailed March 25, 2011, which set a shortened statutory period for reply of three (3) months. No extensions of time under the provisions of 37 CFR 1.136(a) were obtained. Accordingly, the above-identified application became abandoned on June 26, 2011.

The petition satisfies the conditions for revival pursuant to the provisions of 37 CFR 1.137(b) in that (1) the reply in the form of an amendment, a Request for Continued Examination, and the $930 filing fee; (2) the petition fee of $1860; and (3) the required statement of unintentional delay have been received. Accordingly, the reply to the final Office Action of March 25, 2011 is accepted as having been unintentionally delayed.

Telephone inquiries concerning this decision should be directed to Joanne Hama at (571) 272-2911 or in her absence, the undersigned at (571) 272-7099.

The application file is being referred to Technology Center AU 2614 for appropriate action on the concurrently filed RCE.

David Bucci
Petitions Examiner
Office of Petitions

UNITED STATES PATENT AND TRADEMARK OFFICE

Commissioner for Patents
United States Patent and Trademark Office
P.O. Box 1450
Alexandria, VA 22313-1450
www.uspto.gov

MAILED

AUG 13 2010

OFFICE OF PETITIONS

FOX ROTHSCHILD LLP
997 LENOX DRIVE
BUILDING 3
LAWRENCEVILLE, NJ 08648

In re Application of
Marcos R. Lara et al
Application No. 11/245,830
Filed: October 7, 2005
Attorney Docket No. 5261-108US//29,979 USA

DECISION ON PETITION TO WITHDRAW FROM RECORD

This is a decision on the Request to Withdraw as attorney or agent of record under 37 C.F.R. § 1.36(b), filed June 29, 2010.

The request is **APPROVED**.

The request was signed by Richard Woodbridge on behalf of the practitioners of record associated with Customer Number 20802.

Applicant is reminded that there is no attorney of record at this time.

All future correspondence will be directed to assignee Speedus Corp. at the first address (assignee's address of record) indicated below.

Telephone inquiries concerning this decision should be directed to Irvin Dingle at (571) 272-3210.

Irvin Dingle
Petitions Examiner
Office of Petitions

cc: Speedus Corp.
9 Desbrosses Street, Suite 402
New York, NY 10013

cc: Speedus Corp.
1 Dag Hammarskjold Blvd.
Freehold, NJ 07728

cc: Richard Woodbridge
Fox Rothschild LLP
P.O. Box 5231
Princeton, NJ 08543

UNITED STATES PATENT AND TRADEMARK OFFICE

UNITED STATES DEPARTMENT OF COMMERCE
United States Patent and Trademark Office
Address: COMMISSIONER FOR PATENTS
P.O. Box 1450
Alexandria, Virginia 22313-1450
www.uspto.gov

APPLICATION NUMBER	FILING OR 371(C) DATE	FIRST NAMED APPLICANT	ATTY. DOCKET NO./TITLE
11/245,830	10/07/2005	Marcos R. Lara	5261-108US//29,979 USA

CONFIRMATION NO. 7191

POWER OF ATTORNEY NOTICE

20802
FOX ROTHSCHILD LLP
997 Lenox Drive
Building 3
Lawrenceville, NJ 08648

OC000000043023247

Date Mailed: 08/13/2010

NOTICE REGARDING CHANGE OF POWER OF ATTORNEY

This is in response to the Power of Attorney filed 06/29/2010.

- The withdrawal as attorney in this application has been accepted. Future correspondence will be mailed to the new address of record. 37 CFR 1.33.

/idingle/

Office of Data Management, Application Assistance Unit (571) 272-4000, or (571) 272-4200, or 1-888-786-0101

UNITED STATES PATENT AND TRADEMARK OFFICE

UNITED STATES DEPARTMENT OF COMMERCE
United States Patent and Trademark Office
Address: COMMISSIONER FOR PATENTS
P.O. Box 1450
Alexandria, Virginia 22313-1450
www.uspto.gov

APPLICATION NUMBER	FILING OR 371(C) DATE	FIRST NAMED APPLICANT	ATTY. DOCKET NO./TITLE
11/245,830	10/07/2005	Marcos R. Lara	5261-108US//29,979 USA

CONFIRMATION NO. 7191

POA ACCEPTANCE LETTER

Speedus Corp.
9 Desbrosses Street, Suite 402
New York, NY 10013

OC000000043023252

Date Mailed: 08/13/2010

NOTICE OF ACCEPTANCE OF POWER OF ATTORNEY

This is in response to the Power of Attorney filed 06/29/2010.

The Power of Attorney in this application is accepted. Correspondence in this application will be mailed to the above address as provided by 37 CFR 1.33.

/idingle/

Office of Data Management, Application Assistance Unit (571) 272-4000, or (571) 272-4200, or 1-888-786-0101

UNITED STATES PATENT AND TRADEMARK OFFICE

Commissioner for Patents
United States Patent and Trademark Office
P.O. Box 1450
Alexandria, VA 22313-1450
www.uspto.gov

SPEEDUS CORP.
9 DESBROSSES STREET, SUITE 402
NEW YORK, NY 10013

MAILED
DEC 06 2010
OFFICE OF PETITIONS

In re Application of :
Marcos R. Lara et al :
Application No. 11/245,830 : ON PETITION
Filed: October 7, 2005 :
Attorney Docket No. 5261-108US//29,979 :
USA

This is a decision on the petition under the unintentional provisions of 37 CFR 1.137(b), filed October 21, 2010, to revive the above-identified application.

The petition is **GRANTED**.

The petition satisfies the requirements of 37 CFR 1.137(b) in that petitioner has supplied (1) the reply in the form of a continuing application under 37 CFR 1.53(b); (2) the petition fee of $810; and (3) a proper statement of unintentional delay.

This application is being revived solely for purposes of continuity. As continuity has been established by this decision, the application is again abandoned in favor of continuing application No. 12/909,246.

Telephone inquiries concerning this decision should be directed to Irvin Dingle at (571) 272-3210.

Irvin Dingle
Petitions Examiner
Office of Petitions

UNITED STATES PATENT AND TRADEMARK OFFICE

UNITED STATES DEPARTMENT OF COMMERCE
United States Patent and Trademark Office
Address: COMMISSIONER FOR PATENTS
P.O. Box 1450
Alexandria, Virginia 22313-1450
www.uspto.gov

APPLICATION NO.	FILING DATE	FIRST NAMED INVENTOR	ATTORNEY DOCKET NO.	CONFIRMATION NO.
11/246,096	10/11/2005	Mark Greenstein	GRES3002/FJD	7122

23364 7590 05/16/2011
BACON & THOMAS, PLLC
625 SLATERS LANE
FOURTH FLOOR
ALEXANDRIA, VA 22314-1176

EXAMINER
JOHNSON, GREGORY L

ART UNIT	PAPER NUMBER
3691	

MAIL DATE	DELIVERY MODE
05/16/2011	PAPER

Please find below and/or attached an Office communication concerning this application or proceeding.

The time period for reply, if any, is set in the attached communication.

UNITED STATES PATENT AND TRADEMARK OFFICE

Commissioner for Patents
United States Patent and Trademark Office
P.O. Box 1450
Alexandria, VA 22313-1450
www.uspto.gov

Bacon & Thomas, PLLC
625 Slaters Lane
Fourth Floor
Alexandria, VA 22314

In re application of
Mark Greenstein
Application No. 11/246,096
Filed: October 11, 2005
For: METHOD OF PURCHASING A PRODUCT TO AVOID ADVERSE SELECTION

: **DECISION ON RENEWED**
: **PETITION TO MAKE SPECIAL**
: **(ACCELERATED**
: **EXAMINATION)**

This is in response to the renewed petition filed on February 26, 2007 to make the above-identified application special on the basis of special examining procedure for certain new applications - accelerated examination as set forth in MPEP § 708.02 VIII. The delay in treating this petition is sincerely regretted.

The requirements for granting special status under this section are: (A) a petition to make special accompanied by the fee set forth in 37 CFR 1.17(i); (B) all claims being directed to a single invention, or an election without traverse if the Office determines that all the claims are not directed to a single invention; (C) a statement that a pre-examination search was made listing the field of search; (D) one copy of each of the references deemed most closely related to the subject matter encompassed by the claims if said references are not already of record; and (E) a detailed discussion of how the claimed subject matter is patentable over the references.

A petition to make special was filed on August 24, 2006. The petition was dismissed in a decision mailed October 24, 2006 wherein it was held that items (B), (C), (D) and (E) cited above were missing.

The renewed petition filed February 26, 2007 supplies the missing item (B). However, the renewed petition continues to be deficient with respect to items (C), (D) and (E).

Regarding item (C), merely providing a couple of search terms does not satisfy the requirement that the petition include a listing of the field of search. As was pointed out in the dismissal of October 24, 2006, the actual field of search, if electronic, needs to include: what database(s) were searched, what specific search logic was used and what were the results of the search.

Regarding items (D) and (E), as pointed out in the dismissal of October 24, 2006, it strains credulity to have it asserted that there is not even one reference that has been found that is relevant to even one limitation of applicant's claimed invention. Nor can the short explanation of the two cited references be considered a "detailed discussion of how the claimed subject matter is patentable over the references in accordance with 37 CFR 1.111(b) and (c)". It is also noted that a copy of the listed patent U.S. 6,684,189 does not appear to have been provided.

Therefore, the requirements for special status under MPEP § 708.02 VIII have not been met, and the petition is **DENIED**.

Petitioner is reminded that a single opportunity to perfect the original petition is given. Therefore, further petitions for accelerated examination in this application will not be entertained.

SUMMARY: Petition to Make Special **DENIED**.

Steven N. Meyers
Quality Assurance Specialist
Technology Center 3600
(571) 272-6611

SNM/snm: 5/15/11

SPE RESPONSE FOR CERTIFICATE OF CORRECTION

Paper No.: _____

DATE : 01/11/11

TO SPE OF : ART UNIT: 2447 Attn: HWANG JOON H (SPE)

SUBJECT : Request for Certificate of Correction for Appl. No.: 11/246163 Patent No.: 7831890

CofC Mailroom date: 01/05/11

Please respond to this request for a certificate of correction within 7 days.

FOR IFW FILES:

Please review the requested changes/corrections as shown in the **COCIN** document(s) in the IFW application image. No new matter should be introduced, nor should the scope or meaning of the claims be changed.

Please complete the response (see below) and forward the completed response to scanning using document code **COCX**.

FOR PAPER FILES:

Please review the requested changes/corrections as shown in the attached certificate of correction. Please complete this form (see below) and forward it with the file to:

Certificates of Correction Branch (CofC)
Randolph Square – 9D10-A
Palm Location 7580

Tasneem Siddiqui
Certificates of Correction Branch
703-756-1593 or 703-756-1814

Thank You For Your Assistance

The request for issuing the above-identified correction(s) is hereby:
Note your decision on the appropriate box.

X **Approved**	**All** changes apply.
❑ **Approved in Part**	Specify below which changes **do not** apply.
❑ **Denied**	State the reasons for denial below.

Comments: Approved.

/Joon H. Hwang/ 2447
SPE Art Unit

PTO/SB/44 (09-07)
Approved for use through 08/31/2013. OMB 0651-0033
U.S. Patent and Trademark Office; U.S. DEPARTMENT OF COMMERCE
Under the Paperwork Reduction Act of 1995, no persons are required to respond to a collection of information unless it displays a valid OMB control number.
(Also Form PTO-1050)

UNITED STATES PATENT AND TRADEMARK OFFICE
CERTIFICATE OF CORRECTION

PATENT NO. : 7,831,890 B2

APPLICATION NO.: 11/246,163

ISSUE DATE : November 9, 2010

INVENTOR(S) : Marcos C. Tzannes et al.

It is certified that an error appears or errors appear in the above-identified patent and that said Letters Patent is hereby corrected as shown below:

IN THE CLAIMS:

In column 11, claim 5, line 18, delete "transmission" and insert – reception –

In column 12, claim 5, line 3, delete "received" and insert -- transmitted --

In column 12, claim 5, line 8, delete "shred" and insert – shared –

MAILING ADDRESS OF SENDER (Please do not use customer number below):

Jason H. Vick c/o Sheridan Ross, PC
1560 Broadway, Suite 1200
Denver, CO 80202

This collection of information is required by 37 CFR 1.322, 1.323, and 1.324. The information is required to obtain or retain a benefit by the public which is to file (and by the USPTO to process) an application. Confidentiality is governed by 35 U.S.C. 122 and 37 CFR 1.14. This collection is estimated to take 1.0 hour to complete, including gathering, preparing, and submitting the completed application form to the USPTO. Time will vary depending upon the individual case. Any comments on the amount of time you require to complete this form and/or suggestions for reducing this burden, should be sent to the Chief Information Officer, U.S. Patent and Trademark Office, U.S. Department of Commerce, P.O. Box 1450, Alexandria, VA 22313-1450. DO NOT SEND FEES OR COMPLETED FORMS TO THIS ADDRESS. **SEND TO: Attention Certificate of Corrections Branch, Commissioner for Patents, P.O. Box 1450, Alexandria, VA 22313-1450.**

If you need assistance in completing the form, call 1-800-PTO-9199 and select option 2.

UNITED STATES PATENT AND TRADEMARK OFFICE

Commissioner for Patents
United States Patent and Trademark Office
P.O. Box 1450
Alexandria, VA 22313-1450
www.uspto.gov

ARGOS THERAPEUTICS, INC.
4233 TECHNOLOGY DRIVE
DURHAM, NC 27704

MAILED
APR 20 2011
OFFICE OF PETITIONS

In re Application of :
Don Healey et al :
Application No. 11/246,387 : DECISION ON PETITION
Filed: October 7, 2005 :
Attorney Docket No. ARG030 :

This is a decision on the petitions, filed March 8, 2011, which are being treated under 37 CFR 1.8(b), requesting withdrawal of the holding of abandonment in the above-identified application and under 37 CFR 1.27(c), seeking status as small entity.

The petition under 37 CFR 1.8(b) is **GRANTED**.

This application was held abandoned for failure to timely respond to the Office action of August 17, 2010, which set a shortened statutory period three (3) month period for reply. Three month (3) extension of time pursuant to the provisions of 37 CFR 1.136(a) was obtained. Accordingly, a reply was due on or before February 17, 2011.

Petitioner states that a timely reply was submitted via facsimile transmission on February 16, 2011, which includes the followings: Request for Continued Examination and Response under 37 CFR 1.114; Request for Continued Examination Transmittal; Information Disclosure Statement, including Form PTO-1449 with copies of cited References; Small Entity Statement; Three Month Extension of Time; Authorization to charge fees to Deposit account and Authorization to charge any additional fees due or credit any overpayment to Deposit account. Petitioner has submitted a copy of the previously mailed correspondence, which bears a certificate of facsimile transmission dated February 16, 2011, which would have rendered the reply timely if received.

The file record does not include the originally submitted papers. Failure to receive correspondence which includes a certificate of mailing or certificate of facsimile transmission is addressed in 37 CFR 1.8(b), reproduced below:

> In the event that correspondence is considered timely filed by being mailed or transmitted in accordance with paragraph (a) of this section, but not received in the U.S. Patent and Trademark Office after a reasonable amount of time has elapsed from the time of mailing or transmitting of the correspondence, or after the application is held to be abandoned, or after the proceeding is dismissed, terminated, or decided with prejudice, the correspondence will be considered timely if the party who forwarded such correspondence:

(1) Informs the Office of the previous mailing or transmission of the correspondence promptly after becoming aware that the Office has no evidence of receipt of the correspondence;

(2) Supplies an additional copy of the previously mailed or transmitted correspondence and certificate; and

(3) Includes a statement which attests on a personal knowledge basis or to the satisfaction of the Director to the previous timely mailing or transmission. If the correspondence was sent by facsimile transmission, a copy of the sending unit's report confirming transmission may be used to support this statement.

The petition satisfies the above requirements of 37 CFR 1.8(b). Accordingly, the holding of abandonment for failure to timely file a reply to the Office action of August 17, 2010 is hereby withdrawn and the application restored to pending status.

The copy of the reply received with the petition will be accepted in place of the reply shown to have been transmitted by facsimile on February 16, 2011.

The petition under 37 CFR 1.27(c) is **GRANTED**.

The supplemental Verified Statement Claiming Small Entity Status of March 8, 2011 has been made of record and the small entity status has been accorded.

Telephone inquiries related to this communication should be directed to Irvin Dingle at (571) 272-3210.

This application is being referred to Technology Center AU 1633 for appropriate action in the normal course of business on the reply received with petition.

Irvin Dingle
Petitions Examiner
Office of Petitions

UNITED STATES PATENT AND TRADEMARK OFFICE

Commissioner for Patents
United States Patent and Trademark Office
P.O. Box 1450
Alexandria, VA 22313-1450
www.uspto.gov

MAILED
SEP 29 2011
OFFICE OF PETITIONS

RENNER OTTO BOISSELLE & SKLAR, LLP
1621 EUCLID AVENUE
NINETEENTH FLOOR
CLEVELAND OH 44115

In re Application of
Mark Williams, et al.
Application No. 11/246,409
Filed: October 7, 2005
Attorney Docket No.: VIRT.P101US

ON PETITION

This is a decision on the petition, filed September 22, 2011, to revive the above-identified application under 37 CFR 1.137(b).

This application became abandoned for failure to timely file a reply within the meaning of 37 CFR 1.113 to the final Office action of October 29, 2010. A Notice of Abandonment was mailed on June 3, 2011. On September 22, 2011, the present petition was filed, along with a Notice of Appeal (with fee) and a Pre-Appeal Brief Request for Review.

The proposed reply required for consideration of a petition to revive must be a Notice of Appeal (and appeal fee required by 37 CFR 41.20(b)(2)), an amendment that *prima facie* places the application in condition for allowance, a Request for Continued Examination (RCE) and submission (37 CFR 1.114), or the filing of a continuing application under 37 CFR 1.53(b). See MPEP 711.03(c)(II)(A)(2).

The petition satisfies the requirements of 37 CFR 1.137(b) in that petitioner has supplied (1) the reply in the form of a Notice of Appeal and appeal fee of $270; (2) the petition fee of $810; and (3) an adequate statement of unintentional delay.

Accordingly, the petition is GRANTED.

In view of the submission of the Pre-Appeal Brief Request for Review, the period of time for filing the appeal brief will be the later of the two-month period set in 37 CFR 41.37(a) or one month from the mail date of the decision on the request. **The two-month period for filing an appeal brief under 37 CFR 41.37 (accompanied by the fee required by 37 CFR 41.20(b)(2)), runs from the date of this decision.**

This application is being referred to Technology Center AU 2614 for further prosecution.

Telephone inquiries concerning this decision may be directed to the undersigned at (571) 272-3204. Inquiries relating to the prosecution of the application should be referred to the Technology Center.

/SDB/

Sherry D. Brinkley
Petitions Examiner
Office of Petitions

UNITED STATES PATENT AND TRADEMARK OFFICE

COMMISSIONER FOR PATENTS
UNITED STATES PATENT AND TRADEMARK OFFICE
P.O. BOX 1450
ALEXANDRIA, VA 22313-1450
www.uspto.gov

Paper No.

HAYNES BEFFEL & WOLFELD LLP
P O BOX 366
HALF MOON BAY CA 94019

MAILED
JAN 18 2011
OFFICE OF PETITIONS

In re Patent No. 7,506,283	: DECISION ON REQUEST
Bailey et al.	: FOR
Issue Date: 03/17/2009	: RECONSIDERATION OF
Application No. 11/246,527	: PATENT TERM ADJUSTMENT
Filed: 10/11/2005	: and
Atty Docket No.	: NOTICE OF INTENT TO ISSUE
SPIR 2027-2	: CERTIFICATE OF CORRECTION

This is a decision on the petition filed on April 6, 2009, which is treated as a petition under 37 CFR 1.705(d), requesting that the patent term adjustment indicated on the above-identified patent be corrected to indicate that the term of the above-identified patent is extended or adjusted by five hundred fifty-six (556) days. For the reasons stated below, the petition is treated as requesting that the patent term adjustment indicated on the above-identified patent be corrected to indicate that the term of the above-identified patent is extended or adjusted by three hundred forty (340) days.

The petition to correct the patent term adjustment indicated on the above-identified patent to indicate that the term of the above-identified patent is extended or adjusted by three hundred forty (340) days is **GRANTED to the extent indicated herein**.

As to the "B" delay, the period is the period beginning on October 12, 2008, the day after the date that is three years after the date on which the application was filed under 35 U.S.C. 111(a) and ending on March 17, 2009, the date the application issued as a patent, or 157 days.

Patentees disclose that a period of reduction of 218 days for applicant delay should be entered in connection with the abandonment of the application for failure to timely file a response to the Notice to File Missing Parts mailed on November 11, 2005. Specifically, the response was filed on September 7, 2006, three months and 218 days after the day after the date of mailing of the Notice to File Missing Parts.

Petitioners are correct, to the extent indicated.

37 CFR 1.704(c)(3) states:

> Circumstances that constitute a failure of the applicant to engage in reasonable efforts to conclude processing or examination of an application also include the following circumstances, which will result in the following reduction of the period of adjustment set forth in § 1.703 to the extent that the periods are not overlapping: Abandonment of the application or late payment of the issue fee, in which case the period of adjustment set forth in §1.703 shall be reduced by the number of days, if any, beginning on the date of abandonment or the date after the date the issue fee was due and ending on the earlier of:
>
> (i) The date of mailing of the decision reviving the application or accepting late payment of the issue fee; or
>
> (ii) The date that is four months after the date the grantable petition to revive the application or accept late payment of the issue fee was filed;

On November 1, 2005, the Notice to File Missing Parts of Nonprovisional Application was mailed, setting a two (2) month shortened period for reply. On January 2, 2006, the day after the date two months after the date the Notice was mailed, the application became abandoned for failure to timely file a response to the Notice. On September 7, 2006, a petition to revive was filed, along with a response to the Notice. On April 10, 2007, more than four months after the date the petition was filed, a decision granting the petition to revive was mailed. Accordingly, the period of reduction pursuant to 37 CFR 1.704(c)(3) is the period beginning on January 2, 2006, the date the application became abandoned, and ending on January 7, 2007, the date that is four months after the date the grantable petition was filed, or 371 days. As the 218 day period under 37 CFR 1.704(b) from February 1, 2006, to September 7, 2006, completely overlaps with the 371 day period under 37 CFR 1.704(c)(3), the non-overlapping period of reduction for applicant delay is 371 days.

The patent term adjustment at the time of issuance of the patent is 340 days (554 days of Office delay + 157 days of over three years delay – 371 days of applicant delay).

The Office will *sua sponte* issue a certificate of correction. Pursuant to 37 CFR 1.322, the Office will not issue a certificate of correction without first providing assignee or patentee an opportunity to be heard. Accordingly, patentees are given **one (1) month or thirty (30) days,** whichever is longer, from the mail date of this decision to respond. No extensions of time will be granted under § 1.136.

The Office thanks Patentees for their good faith and candor in bringing this matter to the attention of the Office.

Nothing in this decision shall be construed as a waiver of the requirement of 35 U.S.C. 154(b)(4) that any civil action by an applicant dissatisfied with a determination made by the Director under

35 U.S.C. 154(b)(3) be filed in the United States District Court for the District of Columbia within 180 days after the grant of the patent.

The Office acknowledges submission of the $200.00 fee set forth in 37 CFR 1.18(e). No additional fees are required. As payment of the fee is a prerequisite to consideration of the request for reconsideration of patent term adjustment, the request to refund the fee is dismissed.

The address in the petition is different than the correspondence address. A courtesy copy of this decision is being mailed to the address in the petition. All future correspondence, however, will be mailed solely to the address of record.

The application is being forwarded to the Certificates of Correction Branch for issuance of a certificate of correction. The Office will issue a certificate of correction indicating that the term of the above-identified patent is extended or adjusted by **three hundred forty (340)** days.

Telephone inquiries specific to this matter should be directed to the undersigned at (571) 272-3231.

D Wood

Douglas I. Wood
Senior Petitions Attorney
Office of Petitions

Enclosure: Copy of DRAFT Certificate of Correction

CC: FOLEY & LARDNER LLP
SUITE 500
3000 K STREET NW
WASHINGTON DC 20007

UNITED STATES PATENT AND TRADEMARK OFFICE

CERTIFICATE OF CORRECTION

PATENT : 7,506,283 B2

DATED : **Mar. 17, 2009** **DRAFT**

INVENTOR(S) : Bailey et al.

It is certified that error appears in the above-identified patent and that said Letters Patent is hereby corrected as shown below:

On the cover page,

[*] Notice: Subject to any disclaimer, the term of this patent is extended or adjusted under 35 USC 154(b) by 554 days.

Delete the phrase "by 554 days" and insert – by 340 days--

UNITED STATES PATENT AND TRADEMARK OFFICE

Commissioner for Patents
United States Patent and Trademark Office
P.O. Box 1450
Alexandria, VA 22313-1450
www.uspto.gov

HUNTON & WILLIAMS LLP
INTELLECTUAL PROPERTY
DEPARTMENT
1900 K STREET, N.W.
SUITE 1200
WASHINGTON DC 20006-1109

MAILED

SEP 20 2010

OFFICE OF PETITIONS

In re Application of :
Rothschild et al. :
Application No. 11/246,542 :
Filed: October 11, 2005 :
Attorney Docket No. 47004.00348 :
Title: UPSIDE FORWARD WITH :
EARLY FUNDING PROVISION :

ON APPLICATION FOR
PATENT TERM ADJUSTMENT

This is in response to the "REQUEST FOR RECONSIDERATION OF PATENT TERM ADJUSTMENT UNDER 37 CFR § 1.705" filed July 28, 2010. Applicants submit that the correct patent term adjustment to be indicated on the patent is seven hundred sixty-six (766) days, not five hundred forty-six (546) days as calculated by the Office as of the mailing of the initial determination of patent term adjustment. Applicants request this correction solely on the basis that the Office will take in excess of three years to issue this patent.

As the instant application for patent term adjustment requests reconsideration of the patent term adjustment as it relates to the Office's failure to issue the patent within 3 years of the filing date, the application for patent term adjustment under 37 CFR 1.705(b) is **DISMISSED as PREMATURE**.

The $200.00 petition fee set forth in 37 CFR 1.18(e) has been assessed. No additional fees are required.

Knowledge of the actual date the patent issues is required to calculate the amount, if any, of additional patent term patentee is entitled to for Office failure to issue the patent within 3 years. See § 1.702(b). (This is true even where a request for continued examination (RCE) was filed). The computer will not

undertake the § 1.702(b) calculation until the actual date of issuance of the patent has been determined. Likewise, the computer will not calculate any further Office delay under § 1.702(a)(4) or applicant delay under § 1.704(c)(10) until the actual date of issuance of the patent has been determined. As such, the Office cannot make a determination on the correctness of the patent term adjustment until the patent has issued.

Requesting reconsideration of the patent term adjustment to be indicated on the patent under 37 CFR 1.705(b) based on the initial determination of patent term adjustment and a projected issuance date of the patent (or even the filing date of the request for continued examination) is premature. Accordingly, it is appropriate to dismiss as premature such a request.

Rather than file an application for patent term adjustment under 37 CFR 1.705(b) contesting the 37 CFR 1.702(b) calculation at the time of the mailing of the notice of allowance, applicant is advised that they may wait until the time of the issuance of the patent and file a request for reconsideration of the patent term adjustment pursuant to 37 CFR 1.705(d). As the USPTO does not calculate the amount of time earned pursuant to 37 CFR 1.702(b) until the time of the issuance of the patent, the Office will consider any request for reconsideration of the patent term adjustment due to an error in the calculation of 37 CFR 1.702(b) to be timely if the request for reconsideration is filed within two months of the issuance of the patent. However, as to all other bases for contesting the initial determination of patent term adjustment received with the notice of allowance, applicant must timely file an application for patent term adjustment prior to the payment of the issue fee[1].

---

[1] For example, if applicant disputes both the calculation of patent term adjustment under 37 CFR 1.702(a)(1) for Office failure to mail a first Office action or notice of allowance not later than fourteen months after the date on which the application was filed and under 37 CFR 1.702(b) for Office failure to issue a patent within three years of the actual filing date of the application, then applicant must still timely file an application for patent term adjustment prior to the payment of the issue fee to contest the calculation of Office delay in issuing a first Office action or notice of allowance. See 37 CFR 1.705(b) and 35 U.S.C. 154(b)(3)(B). A dispute as to the calculation of the §1.702(a)(1) period raised on request for

Any request for reconsideration of the patent term adjustment indicated on the patent must be timely filed within 2 months after issuance pursuant to 37 CFR 1.705(d) and **must** include payment of the required fee under 37 CFR 1.18(e).

The Office of Data Management has been advised of this decision. This application is being referred to the Office of Data Management for issuance of the patent.

Telephone inquiries specific to this matter should be directed to Petitions Attorney Charlema Grant at (571) 272-3215.

Anthony Knight
Director
Office of Petitions

---

reconsideration of patent term adjustment under 37 CFR 1.705(d) will be dismissed as untimely filed.

UNITED STATES PATENT AND TRADEMARK OFFICE

Commissioner for Patents
United States Patent and Trademark Office
P.O. Box 1450
Alexandria, VA 22313-1450
www.uspto.gov

THORPE NORTH & WESTERN, LLP.
P.O. Box 1219
SANDY UT 84091-1219

MAILED
AUG 3 1 2010
OFFICE OF PETITIONS

In re Application of	:	
John B. HALANDER et al.	:	
Application No. 11/246,557	:	
Filed: October 07, 2005	:	NOTICE UNDER 37 CFR. 1.28(c)
Patent No. 7,771,550	:	
Issued: August 10, 2010	:	
Attorney Docket No. 00218-24746	:	

This is a notice regarding your request for acceptance of a fee deficiency submission under 37 CFR 1.28.

The Office no longer investigates or rejects original or reissue applications under 37 CFR 1.56. **1098 Off. Gaz. Pat. Office 502 (January 3, 1989)**. Therefore, nothing in this Notice is intended to imply that an investigation was done.

Your fee deficiency submission under 37 CFR 1.28 is hereby **ACCEPTED**.

This application is no longer entitled to small entity status. Accordingly, all future fees paid in this application must be paid at the large entity rate.

Inquiries related to this communication should be directed to Michelle R. Eason at (571) 272-4231.

Thurman K. Page
Petitions Examiner
Office of Petitions

UNITED STATES PATENT AND TRADEMARK OFFICE

Commissioner for Patents
United States Patent and Trademark Office
P.O. Box 1450
Alexandria, VA 22313-1450
www.uspto.gov

Decision Date : October 6,2011

In re Application of :

David Plank

Application No : 11246610

Filed : 07-Oct-2005

Attorney Docket No : 6560US

DECISION ON PETITION

UNDER CFR 1.137(b)

This is an electronic decision on the petition under 37 CFR 1.137(b), filed October 6,2011 , to revive the above-identified application.

The petition is **GRANTED.**

The above-identified application became abandoned for failure to reply in a timely manner to the Notice of Allowance and Issue Fee(s) Due. The date of abandonment is the day after the expiration date of the period set for reply in the Notice.

The electronic petition satisfies the conditions for revival pursuant to the provisions of 37 CFR 1.137(b) in that (1) the reply in the form of payment of the Issue Fee and the Publication Fee (if necessary); (2) the petition fee as set forth in 37 CFR 1.17 (m); (3) the drawing correction and/or other deficiencies (if necessary); and (4) the required statement of unintentional delay have been received. Accordingly, the Issue Fee payment is accepted as having been unintentionally delayed.

Telephone inquiries concerning this decision should be directed to the Patent Electronic Business Center (EBC) at 866-217-9197.

This application file is being directed to the Office of Data Management.

Office of Petitions

Doc Code: PET.AUTO Document Description: Petition automatically granted by EFS-Web	PTO/SB/64 U.S. Patent and Trademark Office Department of Commerce

Electronic Petition Request	PETITION FOR REVIVAL OF AN APPLICATION FOR PATENT ABANDONED UNINTENTIONALLY UNDER 37 CFR 1.137(b)
Application Number	11246610
Filing Date	07-Oct-2005
First Named Inventor	David Plank
Art Unit	1782
Examiner Name	VIREN THAKUR
Attorney Docket Number	6560US
Title	MICROWAVE POPCORN WITH VISCOUS LIQUID FAT AND METHOD OF PREPARATION

The above-identified application became abandoned for failure to file a timely and proper reply to a notice or action by the United States Patent and Trademark Office. The date of abandonment is the day after the expiration date of the period set for reply in the office notice or action plus any extensions of time actually obtained.

APPLICANT HEREBY PETITIONS FOR REVIVAL OF THIS APPLICATION

NOTE: A grantable petition requires the following items:
(1) Petition fee;
(2) Reply and/or issue fee;
(3) Terminal disclaimer with disclaimer fee – required for all utility and plant applications filed before June 8, 1995; and for all design applications;
(4) Statement that the entire delay was unintentional.

Petition fee
The petition fee under 37CFR 1.17(m) is attached.

☐ Applicant claims SMALL ENTITY status. See 37 CFR 1.27.

☐ Applicant is no longer claiming SMALL ENTITY status. See 37 CFR 1.27(g)(2).

☐ Applicant(s) status remains as SMALL ENTITY.

☒ Applicant(s) status remains as other than SMALL ENTITY.

Issue Fee and Publication Fee :

Issue Fee and Publication Fee are not due.

☒ Issue Fee Transmittal is attached

Drawing corrections and/ or other deficiencies.

- (●) Drawing corrections and/ or other deficiencies are not required
- ( ) I certify, in accordance with 37 CFR 1.4.(D)(4), that drawing corrections and/ or other deficiencies have previously been filed on
- ( ) Drawing corrections and/ or other deficiencies are attached.
- [x] STATEMENT: The entire delay in filing the required reply from the due date for the required reply until the filing of a grantable petition under 37 CFR 1.137(b) was unintentional.

THIS PORTION MUST BE COMPLETED BY THE SIGNATORY OR SIGNATORIES

I certify, in accordance with 37 CFR 1.4(d)(4) that I am:

- (●) An attorney or agent registered to practice before the Patent and Trademark Office who has been given power of attorney in this application.
- ( ) An attorney or agent registered to practice before the Patent and Trademark Office, acting in a representative capacity.
- ( ) A sole inventor
- ( ) A joint inventor; I certify that I am authorized to sign this submission on behalf of all of the inventors.
- ( ) A joint inventor; all of whom are signing this e-petition.
- ( ) The assignee of record of the entire interest that has properly made itself of record pursuant to 37 CFR 3.71.

Signature	/John A. O'Toole/
Name	John O'Toole
Registration Number	28336

UNITED STATES PATENT AND TRADEMARK OFFICE

UNITED STATES DEPARTMENT OF COMMERCE
United States Patent and Trademark Office
Address: COMMISSIONER FOR PATENTS
P.O. Box 1450
Alexandria, Virginia 22313-1450
www.uspto.gov

APPLICATION NO.	FILING DATE	FIRST NAMED INVENTOR	ATTORNEY DOCKET NO.	CONFIRMATION NO.
11/246,846	10/07/2005	James A. Sigler	37085US1	6758

116 7590 08/18/2010
PEARNE & GORDON LLP
1801 EAST 9TH STREET
SUITE 1200
CLEVELAND, OH 44114-3108

EXAMINER
FETSUGA, ROBERT M

ART UNIT	PAPER NUMBER
3751	

MAIL DATE	DELIVERY MODE
08/18/2010	PAPER

Please find below and/or attached an Office communication concerning this application or proceeding.

The time period for reply, if any, is set in the attached communication.

UNITED STATES PATENT AND TRADEMARK OFFICE

Commissioner for Patents
United States Patent and Trademark Office
P.O. Box 1450
Alexandria, VA 22313-1450
www.uspto.gov

PEARNE & GORDON LLP
1801 EAST 9TH STREET
SUITE 1200
CLEVELAND OH 44114-3108

In re Application of:	:	
SIGLER, JAMES A.	:	
Serial No.: 11/246,846	:	DECISION ON PETITION
Filed: October 7, 2005	:	TO WITHDRAW DRAWING
Docket: 37085US1	:	OBJECTION
Title: ELECTRO-MECHANICAL FLUSH MECHANISM	:	

This is a decision on the petition filed on August 5, 2010 to request entry of the amended Figures 5 and 7 and withdrawal the objection to the drawings and the specification. This decision is being considered pursuant to 37 CFR 1.181. No fee is required under this section.

The petition is **DISMISSED**

The record shows that:

1. On August 21, 2009, the examiner issued a Non-Final Rejection, where he particularly rejected claim 4, 7, 12, 15 and 17 under 35 USC 112, first paragraph, as containing subject matter which was not described in the specification and objected to the drawings because they did not show every feature specified in the claims under 37 CFR § 1.83(a).
2. Applicant responded on November 20, 2009, by amending Figs. 5 and 7 and the claims at issue.
3. The examiner issued a final rejection on January 10, 2010. The examiner objected to the drawings which included a feature "vertical slot" that did not correspond to the original specification. The examiner objected to the amended drawings Figs. 5 and 7 because it introduces new matter into the disclosure in contravention with 35 U.S.C. 132. The examiner also continued to reject claims at issue under 35 USC § 112, first paragraph, as containing subject matter which was not described in the specification in such a way as to reasonably convey to one skilled in the relevant art that the inventor(s), at the time the application was filed, had possession of the claimed invention.

4. On March 17, 2010, a Rule 116 amendment was filed. The examiner issued an Advisory Action of March 17, 2010 and refused to enter the rule 116 amendment.
5. Subsequently, on April 8, 2010, the applicant filed an RCE and requested the Rule 116 amendment be entered.
6. The examiner on May 3, 2010 issued a non-final Office action. The examiner maintained objection to the drawings and the specification for the same reasons as stated previously.
7. Now, the applicant filed this petition for review by the Director of the Technology Center requesting withdrawal entry of the amended drawings filed on November 20, 2009 and withdrawal of the drawing objection and the specification objection.

Discussion and Analysis

A review of the record indicates that the drawing objection and claim rejection are directed at the same issues. Under 37 CFR 1.83(a)[1], the drawing in a nonprovisional application must illustrate every claimed feature, with the exception of conventional features deemed not essential for a proper understanding of the invention. These features should be illustrated in a graphical drawing or labeled representation. The newly amended drawings of Figs. 5 and 7 show a "vertical slot" feature that did not correspond to the original specification as filed on October 7, 2005. The examiner believes that the drawings do not accurately portray each essential element of the invention, and that new matter is introduced. In the non-final office action of May 13, 2010, the examiner also rejected claims 1, 2, 4, 5, 7-17 and 21-22 under the first paragraph of the 35 USC§ 112 because the claims contain subject matter which was not described in the specification in such a way as to reasonably convey to one skilled in the relevant art that the inventor(s), at the time the application was filed, had possession of the claimed invention. Claims 11 and 13 are also rejected under the second paragraph of the 35 USC § 112 because the mete and bounds for the terms "drive mechanism.., comprising a drive arm" and "configured to move substantially along an axis" are not ascertainable.

It is the policy of the USPTO in appropriate circumstances to decline to rule on a petitionable issue, when, as here, that an issue is also determinative of a rejection, and as such, is appropriate for consideration on appeal to the BPAI. In this case, the issue in the objection and rejection, as here, additionally and necessarily requires the exercise of technical skill and legal judgment in order to evaluate the facts presented, the issue is properly decided on the merits, and is properly reviewed on appeal, not petition. Under the circumstances, it is believed that the issues presented under the claim rejections and drawing objection in the instant case require the same review by the BPAI. Thus, the decision by the BPAI will be critical in determining whether or not the drawings should

[1] § 1.83 Content of drawing. (a) The drawing in a nonprovisional application must show every feature of the invention specified in the claims. However, conventional features disclosed in the description and claims, where their detailed illustration is not essential for a proper understanding of the invention, should be illustrated in the drawing in the form of a graphical drawing symbol or a labeled representation (e.g., a labeled rectangular box). In addition, tables and sequence listings that are included in the specification are, except for applications filed under 35 U.S.C. 371, not permitted to be included in the drawings.

be accepted and entered. This petition is dismissed and deferred to the BPAI as the issue as a whole is appealable and should not be decided by petition.

Conclusion

For the foregoing reasons, the relief requested by the petitioner will not be granted. Because there were objections to the drawings under 37 CFR 1.83(a) and a rejection to claims at issue under 35 USC § 112, the overall issue is appealable and the new matter issues contained in the amended Figs. 5 and 7 will not be decided by petition.

The application is being forwarded to the Primary Examiner Fetsuga via the Supervisory Patent Examiner of Art Unit 3751 for consideration of the applicant's Rule 111 amendment filed on August 6, 2010. Any request for reconsideration of this decision must be submitted within TWO (2) MONTHS from the mail date of this decision, 37 CFR 1.181(f). No extension of time under 37 CFR 1.136(a) is permitted. The reconsideration request should include a cover letter entitled "Renewed Petition under 37 CFR 1.181". Any inquiry regarding this decision should be directed to Henry C. Yuen, Special Programs Examiner, at (571) 272-3468.

PETITION DISMISSED

Jacqueline Wilson for

Karen M. Young, Director
Technology Center 3700

UNITED STATES PATENT AND TRADEMARK OFFICE

Commissioner for Patents
United States Patent and Trademark Office
P.O. Box 1450
Alexandria, VA 22313-1450
www.uspto.gov

KILPATRICK TOWNSEND & STOCKTON LLP
TWO EMBARCADERO CENTER
EIGHTH FLOOR
SAN FRANCISCO, CA 94111-3834

MAILED
AUG 29 2011
OFFICE OF PETITIONS

In re Application of :
Richard A. Smith :
Application No. 11/246,883 :
Filed: October 7, 2005 :
Attorney Docket No. RS-MM-1 :

ON PETITION

This is a decision on the petition under the unintentional provisions of 37 CFR 1.137(b), filed July 27, 2011, to revive the above-identified application.

The petition is **GRANTED**.

The application became abandoned for failure to reply in a timely manner to the non-final Office action mailed, May 30, 2008, which set a shortened statutory period for reply of three (3) months. No extensions of time under the provisions of 37 CFR 1.136(a) were obtained. Accordingly, the application became abandoned on August 31, 2008.

The petition satisfies the requirements of 37 CFR 1.137(b) in that petitioner has supplied (1) the reply in the form of a continuing application under 37 CFR 1.53(b); (2) the petition fee of 1620; and (3) a proper statement of unintentional delay.

This application is being revived solely for purposes of continuity. As continuity has been established by this decision, the application is again abandoned in favor of continuing application No. 13/191,911.

Telephone inquiries concerning this decision should be directed to undersigned at (571) 272-1642.

April M. Wise
Petitions Examiner
Office of Petitions

UNITED STATES PATENT AND TRADEMARK OFFICE

Commissioner for Patents
United States Patent and Trademark Office
P.O. Box 1450
Alexandria, VA 22313-1450
www.uspto.gov

EPSTEIN & GERKEN
1901 RESEARCH BOULEVARD
SUITE 340
ROCKVILLE MD 20850

MAILED
NOV 19 2010
OFFICE OF PETITIONS

In re Application of
Murray
Application No. 11/246,894
Filed: October 7, 2005
Atty. Dkt. No.: 0450.100.US

: DECISION ON PETITION

This is a decision on the petition under 37 CFR 1.137(b), filed August 5, 2010.

The petition is **GRANTED**.

This application became abandoned October 23, 2008 for failure to timely reply to the Notice of Allowance and Issue Fee Due (Notice) mailed July 22, 2008. The Notice set a three (3) month statutory period of time for reply. Notice of Abandonment was mailed November 14, 2008.

A grantable petition under 37 CFR 1.137(b) must be accompanied by: (1) the required reply, unless previously filed; (2) the petition fee as set forth in 37 CFR 1.17(m); (3) a statement that the entire delay in filing the required reply from the due date for the reply until the filing of a grantable petition pursuant to 37 CFR 1.137(b) was unintentional; and (4) any terminal disclaimer (and fee as set forth in 37 CFR 1.20(d)) required by 37 CFR 1.137(d). Where there is a question as to whether either the abandonment or the delay in filing a petition under 37 CFR 1.137 was unintentional, the Director may require additional information. See MPEP 711.03(c)(II)(C) and (D).

The instant petition has been carefully reviewed and found in compliance with the requirements set forth above.

In view thereof, this application is being forwarded to the Office of Data Management for further processing.

Telephone inquiries concerning this matter may be directed to the undersigned at (571) 272-3205.

/ALESIA M. BROWN/

Alesia M. Brown
Petitions Attorney
Office of Petitions

UNITED STATES PATENT AND TRADEMARK OFFICE

Commissioner for Patents
United States Patent and Trademark Office
P.O. Box 1450
Alexandria, VA 22313-1450
www.uspto.gov

FOLEY & LARDNER LLP
150 EAST GILMAN STREET
P.O. BOX 1497
MADISON WI 53701-1497

MAILED

NOV 04 2010

OFFICE OF PETITIONS

In re Application
Ramakrishna Vedantham et al.
Application No. 11/246,920
Filed: October 6, 2005
Attorney Docket No. 088245-1158

: DECISION ON APPLICATION
: FOR PATENT TERM ADJUSTMENT

This is in response to the REQUEST FOR RECONSIDERATION OF PATENT TERM ADJUSTMENT FOR PATENT APPLICATION UNDER 37 C.F.R. §1.705(b) filed October 15, 2010. Applicant requests that the determination of patent term adjustment be corrected from 579 to 1389 days. Applicant requests this correction in part on the basis that the Office will take in excess of three years to issue this patent and is considered in light of the recent court decision in light of the Court of Appeals for the Federal Circuit's decision in *Wyeth v. Kappos*, 2009-1120 (Fed. Cir. 1-7-2010).

As the instant application for patent term adjustment requests reconsideration of the patent term adjustment as it relates to the Office's failure to issue the patent within three years of the filing date, the application for patent term adjustment under 37 CFR 1.705(b) is **DISMISSED as PREMATURE**.

Knowledge of the actual date the patent issues is required to calculate the amount, if any, of additional patent term patentees are entitled to for Office failure to issue the patent within three years. See 37 CFR 1.702(b). (This is true even where a request for continued examination (RCE) was filed). The computer will not undertake the § 1.702(b) calculation until the actual date of issuance of the patent has been determined. Likewise, the computer will not calculate any further Office delay under 37 CFR 1.702(a)(4) or applicant delay under 37 CFR 1.704(c)(10) until the actual date of issuance of the patent has been determined. As such, the Office cannot make a determination on the patent term adjustment relating to those provisions until the patent has issued.

Requesting reconsideration of the patent term adjustment to be indicated on the patent under 37 CFR 1.705(b) based on the initial determination of patent term adjustment and a projected issuance date of the patent (or even the filing date of the request for continued examination) is premature. Accordingly, it is appropriate to dismiss such a request as premature.

Rather than file an application for patent term adjustment under 37 CFR 1.705(b) contesting the 37 CFR 1.702(b) calculation at the time of the mailing of the notice of allowance, applicants are advised that they may wait until the time of the issuance of the patent and file a request for reconsideration of the patent term adjustment pursuant to 37 CFR 1.705(d). As the USPTO does not calculate the amount of time earned pursuant to 37 CFR 1.702(b) until the time of the issuance of the patent, the Office will consider any request for reconsideration of the patent term adjustment due to an error in the calculation of 37 CFR 1.702(b) to be timely if the request for reconsideration is filed within two months of the issuance of the patent. However, as to all other bases for contesting the initial determination of patent term adjustment received with the notice of allowance, applicants must timely file an application for patent term adjustment prior to the payment of the issue fee.[1]

The Office acknowledges submission of the $200.00 fee set forth in 37 CFR 1.18(e) for consideration of the application for patent term adjustment under 37 CFR 1.705(b).

Any request for reconsideration of the patent term adjustment indicated on the patent must be timely filed within two months after issuance pursuant to 37 CFR 1.705(d) and must include payment of the required fee under 37 CFR 1.18(e).

The Office of Data Management has been advised of this decision. This application is being referred to the Office of Data Management for issuance of the patent.

Telephone inquiries specific to this decision should be directed to the undersigned at (571) 272-3212.

Patricia Faison-Ball

Patricia Faison-Ball
Senior Petitions Attorney
Office of Petitions

---

[1] For example, if applicants dispute both the calculation of patent term adjustment under 37 CFR 1.702(a)(1) for Office failure to mail a first Office action or notice of allowance not later than fourteen months after the date on which the application was filed, and under 37 CFR 1.702(b) for Office failure to issue a patent within three years of the actual filing date of the application, then applicants must still timely file an application for patent term adjustment prior to the payment of the issue fee to contest the calculation of Office delay in issuing a first Office action or notice of allowance. See 37 CFR 1.705(b) and 35 U.S.C. 154(b)(3)(B). A dispute as to the calculation of the § 1.702(a)(1) period raised on request for reconsideration of patent term adjustment under 37 CFR 1.705(d) will be dismissed as untimely filed.

UNITED STATES PATENT AND TRADEMARK OFFICE

Commissioner for Patents
United States Patent and Trademark Office
P.O. Box 1450
Alexandria, VA 22313-1450
www.uspto.gov

FOLEY & LARDNER LLP
150 EAST GILMAN STREET
P.O. BOX 1497
MADISON WI 53701-1497

MAILED
FEB 22 2011
OFFICE OF PETITIONS

In re Patent No. 7,853,856
Issued: December 14, 2010
Application No. 11/246,920
Filed: October 6, 2005
Attorney Docket No. 088245-1158

: LETTER REGARDING
: PATENT TERM ADJUSTMENT

This is a decision on the "REQUEST FOR RECONSIDERATION OF PATENT TERM ADJUSTMENT FOR PATENT APPLICATION UNDER 37 C.F.R. §1.705(b)" filed on February 11, 2011, requesting that the patent term adjustment indicated on the above-identified patent be corrected from 1214 days to 1340 days.

The request for review of the patent term adjustment is **DISMISSED.**

Patentee is given **THIRTY (30) DAYS or ONE (1) MONTH, whichever is longer,** from the mail date of this decision to respond. No extensions of time will be granted under § 1.136.

The patent term adjustment indicated in the patent is properly reflected.

Patentee fails to account for the filing of a Notice of Appeal on August 25, 2009. The period consumed by appellate review, whether successful or not, is excluded from the calculation of B delay. See 35 U.S.C. 154(b)(1)(B)(ii). The 126 days of the over three year period consumed by appellate review, beginning on August 25, 2009 and ending on December 28, 2009 are not included in the B delay. *See* 35 U.S.C. § 154(b)(1)(B)(ii). The Office has also determined that the period of overlap is 38 days. Thus, B delay is 635 days, considering the 38 days of overlap. As such, the patent term adjustment is 1214 (541 + 38 "A delay" days + 673 "B delay" days - 38 days of overlap - 0 Applicant delay days) days, not 1340 days.

The Office acknowledges submission of the $200.00 fee set forth in 37 CFR 1.18(e). No additional fees are required.

Telephone inquiries specific to this decision should be directed to the undersigned at (571) 272-3212.

Patricia Faison-Ball

Patricia Faison-Ball
Senior Petitions Attorney
Office of Petitions

UNITED STATES PATENT AND TRADEMARK OFFICE

Commissioner for Patents
United States Patent and Trademark Office
P.O. Box 1450
Alexandria, VA 22313-1450
www.uspto.gov

NORTH AMERICA INTELLECTUAL PROPERTY CORPORATION
P.O. BOX 506
MERRIFIELD VA 22116

MAILED
OCT 01 2010
OFFICE OF PETITIONS

In re Application of :
Sam Shiaw-Shiang Jiang :
Application No. 11/247,003 : NOTICE
Filed: October 11, 2005 :
Attorney Docket No. **ASTP0085USA** :

This is a notice regarding your request filed August 11, 2010, for acceptance of a fee deficiency submission under 37 CFR 1.28.

The Office no longer investigates or rejects original or reissue applications under 37 CFR 1.56. **1098 Off. Gaz. Pat. Office 502 (January 3, 1989)**. Therefore, nothing in this Notice is intended to imply that an investigation was done.

Your fee deficiency submission under 37 CFR 1.28 is hereby **ACCEPTED**.

There is no indication that the petition is signed by a registered patent attorney or patent agent of record. However, in accordance with 37 CFR 1.34, the signature of Sang N. Dang appearing on the correspondence shall constitute a representation to the United States Patent and Trademark Office that he is authorized to represent the particular party in whose behalf he acts. If, Sang N. Dang desires to receive correspondence regarding this file, the appropriate power of attorney documents must be submitted. A courtesy copy of this decision is being mailed to Sang N. Dang, the petitioner herein. However, until otherwise instructed, all future correspondence regarding this application file will be directed solely to the above-noted correspondence address of record.

This application is no longer entitled to small entity status. Accordingly, all future fees paid in this application must be paid at the large entity rate.

Inquiries related to this communication should be directed to the undersigned at (571) 272-4584.

JoAnne Burke
Petitions Examiner
Office of Petitions

cc: Sang N. Dang
Klien, O'Neill & Singh, LLP
18200 Von Karman Avenue, Suite 725
Irvine, CA 92612

UNITED STATES PATENT AND TRADEMARK OFFICE

Commissioner for Patents
United States Patent and Trademark Office
P.O. Box 1450
Alexandria, VA 22313-1450
www.uspto.gov

MAILED
JUN 21 2011
OFFICE OF PETITIONS

FISH & RICHARDSON P.C.
PO BOX 1022
MINNEAPOLIS MN 55440-1022

In re Patent No.7,890,858	:	
Graham, et al.	:	DECISION FOR REQUEST
Issue Date: February 15, 2011	:	FOR RECONSIDERATION
Application No. 11/247,110	:	OF PATENT TERM
Filed: October 11, 2005	:	ADJUSTMENT
Attorney Docket No. **16113-1333001**	:	

This is a decision on the "Application for Patent Term Adjustment Under 37 CFR 1.705(d)," filed April 15, 2011. Patentees request that the patent term adjustment indicated on the face of the Letters of Patent be corrected from one thousand, three hundred and seventy-four (1,374) days, to one thousand, five hundred and six (1,506) days.

The request for reconsideration of the patent term adjustment under 37 CFR 1.705(d) is **DISMISSED**.

Patentee's are given TWO (2) MONTHS from the mail date of this decision to respond. No extension of time will be granted under 37 CFR 1.136.

On February 15, 2011, the above-identified application matured into U.S. Patent No. 7,890,858, with a revised patent term of 1,374 days. By the instant petition, patentees assert that the patent term should be adjusted by 836 days pursuant to 37 CFR 1.702(b) and 37 CFR 1.703(b). Patentees state:

> Section 154(b)(1)(B)(i) of Title 35 excludes from the calculation of B Delay "any time consumed by continued examination of the application." In the present matter, a Request for Continued Examination was filed on September 16, 2010. The Director erred in the calculation of the patent term adjustment by subtracting from B Delay a period of time that was not "consumed by continued examination of the application." The PTO mailed a Notice of Allowance on October 7, 2010, thereby closing examination of the application on that date. Thus, no continued examination took place during 132 day period from October 7, 2010 (the mailing date of the Notice of Allowance) until February 15, 2011 (the date the patent was issued). Accordingly, 132 days for "B Delay" should have been included in addition to the 704 days accorded by the Director for a total B Delay of 836 days.

Excerpt taken from "Application for Patent Term Adjustment Under 37 CFR 1.705(d)," filed April 15, 2011, page 2.

Patentees' argument has been considered, but is not persuasive. Counting the period of time excluded from the "B delay" for the filing of a request for continued examination under 35 U.S.C. 132(b), from the date on which the request for continued examination is filed to the date the patent is issued is proper. Patentees do not dispute that time consumed by continued examination of an application under 35 U.S.C. 132(b) is properly excluded and that the calculation of the excluded period begins on the date of filing of the request for continued examination. At issue is what further processing or examination beyond the date of filing of the request for continued examination is time consumed by continued examination of the application under 35 U.S.C. 132(b). The USPTO indicated in September of 2000 in the final rule to implement the patent term adjustment provisions of the AIPA that once a request for continued examination under 35 U.S.C. 132(b) and 37 CFR 1.114 is filed in an application, any further processing or examination of the application, including granting of a patent, is by virtue of the continued examination given to the application under 35 U.S.C. 132(b) and CFR 1.114. See Changes to Implement Patent Term Adjustment under Twenty-Year Patent Term, 65 Fed. Reg. 56365, 56376 (Sept. 18, 2000) (response to comment 8). Thus, the excluded period begins with the filing of the request for continued examination and ends with the issuance of the patent. The "B" period of delay is 704 days beginning October 12, 2008, and ending September 15, 2010, the day before the date the Request for Continued Examination was filed.

In view thereof, the patent term adjustment of 1,374 days indicated in the patent is correct.

Nothing in this decision shall be construed as a waiver of the requirement of 35 U.S.C. 154(b)(4) that any civil action by an applicant dissatisfied with a determination made by the Director under 35 U.S.C. 154(b)(3) be filed in the United States District Court for the District of Columbia within 180 days after the grant of the patent.

The Office is in receipt of the $200.00 fee set forth in 37 CFR 1.18(e). No additional fees are required.

Further correspondence with respect to this decision should be addressed as follows:

By Mail: Mail Stop Petition
Commissioner for Patents
PO Box 1450
Alexandria, VA 22313-1450

By FAX: (571) 273-8300
ATTN: Office of Petitions

By Hand: Customer Service Window
Randolph Building
401 Dulany Street
Alexandria, VA 22314

Telephone inquiries specific to this matter should be directed to the undersigned at (571) 272-3222.

/Kenya A. McLaughlin/

Kenya A. McLaughlin
Petitions Attorney
Office of Petitions

UNITED STATES PATENT AND TRADEMARK OFFICE

Commissioner for Patents
United States Patent and Trademark Office
P.O. Box 1450
Alexandria, VA 22313-1450
www.uspto.gov

MAILED
JUN 28 2011
OFFICE OF PETITIONS

FISH & RICHARDSON P.C.
PO BOX 1022
MINNEAPOLIS MN 55440-1022

In re Patent No.7,890,858	:	
Graham, et al.	:	DECISION FOR REQUEST
Issue Date: February 15, 2011	:	FOR RECONSIDERATION
Application No. 11/247,110	:	OF PATENT TERM
Filed: October 11, 2005	:	ADJUSTMENT
Attorney Docket No. **16113-1333001**	:	

This is a **revised** decision on the "Application for Patent Term Adjustment Under 37 CFR 1.705(d)," filed April 15, 2011. Patentees request that the patent term adjustment indicated on the face of the Letters of Patent be corrected from one thousand, three hundred and seventy-four (1,374) days, to one thousand, five hundred and six (1,506) days.

The request for reconsideration of the patent term adjustment under 37 CFR 1.705(d) is **DISMISSED**.

On February 15, 2011, the above-identified application matured into U.S. Patent No. 7,890,858, with a revised patent term of 1,374 days. By the instant petition, patentees assert that the patent term should be adjusted by 836 days pursuant to 37 CFR 1.702(b) and 37 CFR 1.703(b). Patentees state:

> Section 154(b)(1)(B)(i) of Title 35 excludes from the calculation of B Delay "any time consumed by continued examination of the application." In the present matter, a Request for Continued Examination was filed on September 16, 2010. The Director erred in the calculation of the patent term adjustment by subtracting from B Delay a period of time that was not "consumed by continued examination of the application." The PTO mailed a Notice of Allowance on October 7, 2010, thereby closing examination of the application on that date. Thus, no continued examination took place during 132 day period from October 7, 2010 (the mailing date of the Notice of

October 7, 2010 (the mailing date of the Notice of Allowance) until February 15, 2011 (the date the patent was issued). Accordingly, 132 days for "B Delay" should have been included in addition to the 704 days accorded by the Director for a total B Delay of 836 days.

Excerpt taken from "Application for Patent Term Adjustment Under 37 CFR 1.705(d)," filed April 15, 2011, page 2.

The Office's calculation of "B delay" is correct. The "B delay" is an adjustment entered if the issuance of the patent was delayed due to the failure of the Office to issue a patent within three years after the date on which the application was filed. However, the adjustment does not include, among other things, any time consumed by continued examination of the application at the request of the applicant under 35 U.S.C. 132(b)[1]. So, with respect to calculating the "B delay" where applicant has filed a request for continued examination, the period of adjustment is the number of days, if any, in the period beginning on the day after the date that is three years after the date on which the application was filed under 35 U.S.C. 111(a) or the national stage commenced under 35 U.S.C. 371(b) or (f) in an international application and ending on the date a patent was issued, but not including the number of days in the period beginning on the date on which a request for continued examination of the application under 35 U.S.C. 132(b) was filed and ending on the date the patent was issued.

Further, counting the period of time excluded from the "B delay" for the filing of a request for continued examination under 35

---

[1] Pursuant to 35 U.S.C. 132(b), 37 CFR 1.114 provides for continued examination of an application, as follows:

(a) If prosecution in an application is closed, an applicant may request continued examination of the application by filing a submission and the fee set forth in § 1.17(e) prior to the earliest of:

(1) Payment of the issue fee, unless a petition under § 1.313 is granted;

(2) Abandonment of the application; or

(3) The filing of a notice of appeal to the U.S. Court of Appeals for the Federal Circuit under 35 U.S.C. 141, or the commencement of a civil action under 35 U.S.C. 145 or 146, unless the appeal or civil action is terminated.

(b) Prosecution in an application is closed as used in this section means that the application is under appeal, or that the last Office action is a final action (§ 1.113), a notice of allowance (§ 1.311), or an action that otherwise closes prosecution in the application.

U.S.C. 132(b), from the date on which the request for continued examination is filed to the date the patent is issued is proper. Patentee does not dispute that time consumed by continued examination of an application under 35 U.S.C. 132(b) is properly excluded and that the calculation of the excluded period begins on the date of filing of the request for continued examination. At issue is what further processing or examination beyond the date of filing of the request for continued examination is not any time consumed by continued examination of the application under 35 U.S.C. 132(b). The USPTO indicated in September of 2000 in the final rule to implement the patent term adjustment provisions of the AIPA that once a request for continued examination under 35 U.S.C. 132(b) and 37 CFR 1.114 is filed in an application, any further processing or examination of the application, including granting of a patent, is by virtue of the continued examination given to the application under 35 U.S.C. 132(b) and CFR 1.114. See Changes to Implement Patent Term Adjustment under Twenty-Year Patent Term, 65 Fed. Reg. 56366, 56376 (Sept. 18, 2000) (response to comment 8). Thus, the excluded period begins with the filing of the request for continued examination and ends with the issuance of the patent.

Patentee's argument that the period of time after the issuance of a notice of allowance on a request for continued examination is not "any time consumed by continued examination requested by the applicant under section 132(b)" within the meaning of 35 U.S.C. 154(b)(1)(B)(i) is not availing. This limitation is not supported by the statutory language. Garcia v. United States, 469 U.S. 70, 75 (1984) ("only the most extraordinary showing of contrary intentions from [legislative history] would justify a limitation on the 'plain meaning' of the statutory language"). BP Am. Prod. Co. v. Burton, 549 U.S. 84, 91 (2006) ("Unless otherwise defined, statutory terms are generally interpreted in accordance with their ordinary meaning"). The statute provides for a guarantee of no more than 3-year application pendency, by providing for an adjustment in the patent term:

First, "Subject to the limitations of paragraph (2)," means that the limitations of paragraph 2 apply to this paragraph's adjustment of patent term. That is, the day-to-day extension of patent term for pendency beyond the 3 year period is restricted as follows: 1) "B delay" cannot accrue for days of "A delay" that overlap, 2) the patent term cannot be extended beyond disclaimed term, and 3) the period of adjustment, including accrued "B delay," will be reduced for applicant delay.

Second, "if the issue of an original patent is delayed due to the failure of the United States Patent and Trademark Office to issue a patent within 3 years after the actual filing date of the application in the United States," meaning that the condition must first occur that the issuance of an original patent (35 U.S.C. 153), not merely the issuance of a notice of allowance, is delayed due to the Office's failure to issue a patent (sign and record a patent grant in the name of the United States), not merely mail a notice of allowance, within 3 years after the actual filing date of the application in the United States. This provision gives the Office a three-year period to issue a patent (sign and record a patent grant in the name of the United States) after the application filing date before an adjustment will accrue for "B delay."

Third, "not including- (i) any time consumed by continued examination of the application requested by the applicant under section 132(b); (ii) any time consumed by a proceeding under section 135(a), any time consumed by the imposition of an order under section 181, or any time consumed by appellate review by the Board of Patent Appeals and Interferences or by a Federal court; or (iii) any delay in the processing of the application by the United States Patent and Trademark Office requested by the applicant except as permitted by paragraph (3)(C), meaning that the three-year period does not include "any time consumed by" or "any delay in processing," as specified in clauses (i)-(iii). This language correlates to 35 U.S.C. 154(b)(1)(A) which likewise provides the basis for determining the period given the Office to take the specified actions before an adjustment will accrue for "A delay" (e.g., extended for 1 day after the day after the period specified in clauses (i)-(iv)).

Furthermore, these clauses are interpreted using their ordinary meanings. Nonetheless, the context of the legislation should be considered. As stated in Wyeth v. Dudas, 580 F. Supp.2d 138(D.D.C., September 30, 2008), because the clock for calculating the 20-year patent term begins to run on the filing date, and not on the day the patent is actually granted, some of the effective term of a patent is consumed by the time it takes to prosecute the application. To mitigate this effect, the statute, *inter alia*, grants adjustments of patent term whenever the patent prosecution takes more than three years, regardless of the reason. The time consumed by prosecution of the application includes every day the application is pending before the Office from the actual filing date of the application in the

United States until the date of issuance of the patent. The time it takes to prosecute the application ends not with the mailing of the notice of allowance, but with the issuance of the patent.

Thus, not including "any time consumed by" means not including any days used to prosecute the application as specified in clauses (i)-(ii)[2]. Clause (i) specifies "any time consumed by continued examination of the application requested by the applicant under section 132(b)." Clause (ii) specifies "any time consumed by a proceeding under section 135(a), any time consumed by the imposition of an order under section 181, or any time consumed by appellate review by the Board of Patent Appeals and Interferences or by a Federal court." "Time" in the context of this legislation throughout refers to days. "Consumed by" means used by or used in the course of. *Websters Collegiate Dictionary*, (11th ed.). The "any" signifies that the days consumed by are "any" of the days in the pendency of the application, and not just days that occur after the application has been pending for 3 years. As such, "any time consumed by" refers to any days used in the course of 1) continued examination of the application under section 132(b)(the filing of a request for continued examination), 2) interference proceedings, 3) secrecy orders, and 4) appellate review. Thus, that 3-year period given to the Office to issue a patent before an adjustment will accrue for "B delay" does not include any days used in the course of or any time consumed by clauses (i)-(ii), including any time consumed by the filing of a request for continued examination.

Fourth, "the term of the patent shall be extended 1 day for each day after the end of that 3-year period until the patent is issued" meaning that the consequence of this failure is that after "the end of that 3-year period" an additional 1 day of patent term will accrue for each day that the application is pending until the day the patent is issued.

---

[2] Clause (iii) provides for not including (iii) any delay in the processing of the application by the United States Patent and Trademark Office requested by the applicant except as permitted by paragraph (3)(C), the term of the patent shall be extended 1 day for each day after the end of that 3-year period until the patent is issued. It is noted that paragraph (3)(C) allows with an adequate showing by applicant for reinstatement of no more than 3 months of the patent term reduced for applicant delay in taking in excess of three months to respond.

The "time consumed by" or used in the course of the continued examination of the application requested by the applicant under section 132(b) does not end until issuance of the patent. 35 U.S.C. 132(b) was enacted under the same title, the "American Inventors Protection Act of 1999," as 35 U.S.C. 154(b). Section 4403 of the AIPA amended 35 U.S.C. § 132 to provide, at the request of the applicant, for continued examination of an application for a fee (request for continued examination or RCE practice), without requiring the applicant to file a continuing application under 37 CFR 1.53(b) or a continued prosecution application (CPA) under 37 CFR 1.53(d). Thus, clause (i) is different from clause (ii) in that clause (i) refers to an examination process whereas clause (ii) refers to time consumed by proceedings (interferences, secrecy orders and appeals) in an application.

By nature, the time used in the course of the examination process continues to issuance of the patent. The examination process involves examining the application to ascertain whether it appears that the applicant is entitled to a patent under the law. See 35 U.S.C. 131 ("[t]he Director shall cause an examination to be made of the application and the alleged new invention; and if on such examination it appears that the applicant is entitled to a patent under the law, the Director shall issue a patent therefor"). If on examination it appears that the applicant is entitled to a patent, the USPTO issues a notice of allowance. See 35 U.S.C. 151 ("[i]f it appears that applicant is entitled to a patent under the law, a written notice of allowance of the application shall be given or mailed to the applicant"). If on examination it appears that the applicant is not entitled to a patent, the USPTO issues a notice (an Office action) stating the applicable rejection, objection, or other requirement, with the reasons therefor. See 35 U.S.C. 132 ("[w]henever, on examination, any claim for a patent is rejected, or any objection or requirement made, the Director shall notify the applicant thereof, stating the reasons for such rejection, or objection or requirement, together with such information and references as may be useful in judging of the propriety of continuing the prosecution of his application"). Neither the issuance of a notice of allowance nor the insurance of an Office action terminates the examination process. If after the issuance of an Office action under 35 U.S.C. 132 it subsequently appears that the applicant is entitled to a patent (e.g., in response to an argument or amendment by the applicant), the USPTO will issue a notice of allowance. Conversely, if after the issuance of a notice of allowance under

35 U.S.C. 151 it subsequently appears that the applicant is not entitled to a patent (e.g., in response to information provided by the applicant or uncovered by the USPTO), the USPTO will withdraw the application from issuance and issue an Office action under 35 U.S.C. 132 stating the applicable rejection, objection, or other requirement, with the reasons therefor.

As held in Blacklight Power, the USPTO's responsibility to issue a patent containing only patentable claims does not end with the issuance of a notice of allowance under 35 U.S.C. 151. See BlackLight Power, Inc. v. Rogan, 295 F.3d 1269, 1273 (Fed. Cir. 2002). Rather, if there is any substantial, reasonable ground within the knowledge or cognizance of the Director as to why an application should not issue, it is the USPTO's duty to refuse to issue the patent even if a notice of allowance has previously been issued for the application. See In re Drawbaugh, 9 App. D.C. 219, 240 (D.C. Cir 1896).

Moreover, the applicant continues to be engaged in the examination process after the mailing of the notice of allowance. 37 CFR 1.56 makes clear that the applicant has a duty to disclose information material to patentability as long as the application is pending before the USPTO (i.e., until a patent is granted or the application is abandoned). See 37 CFR 1.56(a) ("[t]he duty to disclose information exists with respect to each pending claim until the claim is cancelled or withdrawn from consideration, or the application becomes abandoned"). 37 CFR 1.97 and 1.98 provide for the consideration of information submitted by the applicant after a notice of allowance has been mailed. See 37 CFR 1.97(d). In addition, 37 CFR 1.312 provides for the amendment of an application after a notice of allowance has been mailed. In fact, the request for examination procedures[3] permit the filing of a request for continued examination under 37 CFR 1.114 even after the issuance of a notice of allowance under 35 U.S.C. 151. See 37 CFR 1.114(a)(1).

As the examination process does not terminate with the mailing of the notice of allowance, the time consumed by continued examination requested by the applicant under section 132(b) does not terminate with the mailing of the notice of allowance. All the time the application is pending from the date of filing of the request for continued examination to the mailing of the notice of allowance through issuance of the

[3] Thus, on occasion, even where a request for continued examination has already been filed and a notice of allowance issued pursuant to that request, applicant may file a further request for continued examination.

patent is a consequence of the filing of the request for continued examination. Further action by the Office is pursuant to that request. Applicant has gotten further prosecution of the application without having to file a continuing application under 37 CFR 1.53(b).

All of the continued examination pursuant to the filing of the request by the applicant is properly excluded from the delay attributed to the Office. 35 U.S.C. 154(b)(1)(B)'s guarantee of a total application pendency of no more than three years provides for adjustment of the patent term for delay due to the Office's failure to issue the patent within three years, but does not include "any time consumed by continued examination requested by the applicant under 35 U.S.C. 132(b)." It is not necessary to mitigate the effect on the 20-year term to the extent that applicant has requested that the Office continue to examine the application via a request for continued examination, in lieu of, the filing of a continuing application under 37 CFR 1.53(b).

In this instance, a request for continued examination was filed on September 16, 2010, and the patent issued by virtue of that request on February 15, 2011. Pursuant to 35 U.S.C. 154(b)(1)(B)(i), the period beginning on September 16, 2010, and ending on February 15, 2011, is not included in calculating Office delay.

In view thereof, it is concluded that the patent term adjustment of 1,374 days indicated on the patent is correct.

Nothing in this decision shall be construed as a waiver of the requirement of 35 U.S.C. 154(b)(4) that any civil action by an applicant dissatisfied with a determination made by the Director under 35 U.S.C. 154(b)(3) be filed in the United States District Court for the District of Columbia within 180 days after the grant of the patent.

Telephone inquiries specific to this matter should be directed to the undersigned at (571) 272-3222.

/Kenya A. McLaughlin/

Kenya A. McLaughlin
Petitions Attorney
Office of Petitions

UNITED STATES PATENT AND TRADEMARK OFFICE

Commissioner for Patents
United States Patent and Trademark Office
P.O. Box 1450
Alexandria, VA 22313-1450
www.uspto.gov

MAILED
SEP 13 2011
OFFICE OF PETITIONS

FISH & RICHARDSON P.C.
PO BOX 1022
MINNEAPOLIS MN 55440-1022

In re Patent No.7,890,858	:	
Graham, et al.	:	DECISION FOR REQUEST
Issue Date: February 15, 2011	:	FOR RECONSIDERATION
Application No. 11/247,110	:	OF PATENT TERM
Filed: October 11, 2005	:	ADJUSTMENT
Attorney Docket No.16113-133301	:	

This is a decision on the "Response to Decision on Request for Reconsideration of Patent Term Adjustment", filed August 22, 2011. Patentees request that the patent term adjustment indicated on the face of the Letters of Patent be corrected from one thousand, three hundred and seventy-four (1,374) days, to one thousand, five hundred and six (1,506) days.

The request for reconsideration is granted to the extent that the determination has been reconsidered; however, the request for reconsideration of patent term adjustment is **DENIED** with respect to making any change in the patent adjustment determination under 35 U.S.C. § 154(b) of 1,374 days. This decision may be viewed as a final agency action within the meaning of 5 U.S.C. 704 and for purposes of seeking judicial review. See MPEP §1002.02.

BACKGROUND

On February 15, 2011, the subject application matured into U.S. patent No. 7,890,858, with a revised patent term adjustment of one thousand, one three hundred and seventy-four (1,374) days. This revised determination included entry of an additional period of adjustment of seven hundred and four (704) days for the Office taking in excess of three years to issue the patent.

On April 15, 2011, a petition under 37 CFR 1.705(d) was filed requesting that patent term adjustment be reflected as one thousand, five hundred and six (1,506) days.

The request for reconsideration was dismissed by a decision mailed June 21, 2011, and in revision on June 28, 2011.

By the instant petition, patentees again dispute the calculation of the "B" delay period of the patent term adjustment. Specifically, patentees' state[1]:

> Patentees submit that B Delay accumulated for a total of 857 days, beginning on October 12, 2008 (the day after the date that is three years after the date on which the application was filed), and ending February 15, 2011 (the date the patent was issued). The Office has excluded from B Delay the number of days corresponding to the period beginning on June 16, 2008 (the date on which a Request for Continued Examination was filed) and ending on February 15, 2011 (the date the patent was issued). However, this entire period should not be excluded from B delay because it does not correspond in its entirety to continued examination. The Examiner's mailing of a Notice of Allowance Action on October 7, 2010, closed examination of the application on that date. Section 154(b)(1)(B)(i) of Title 35 excludes from B Delay "time consumed by continued examination of the application.' The statute does not provide for exclusion from B Delay of time from the mailing of a Notice of Allowance until issuance (a period during which continued examination did not occur.

Excerpt taken from "Response to Decision on Request for Reconsideration of Patent Term Adjustment and Notice of Intent to Issue Certificate of Correction", filed August 22, 2011, pgs. 1-2.

[1] It is noted that the Request for Continued Examination was filed September 16, 2010, not June 16, 2008, as patentees' indicate.

STATUTE AND REGULATION

35 U.S.C. § 154(b) as amended by § 4402 of the American Inventors Protection Act of 1999[2] (AIPA) provides that:

> ADJUSTMENT OF PATENT TERM. —
>
> (1) PATENT TERM GUARANTEES. —
>
> (A) GUARANTEE OF PROMPT PATENT AND TRADEMARK OFFICE RESPONSES. — Subject to the limitations under paragraph (2), if the issue of an original patent is delayed due to the failure of the Patent and Trademark Office to —
>
> (i) provide at least one of the notifications under section 132 of this title or a notice of allowance under section 151 of this title not later than 14 months after —
>
> (I) the date on which an application was filed under section 111(a) of this title; or
>
> (II) the date on which an international application fulfilled the requirements of section 371 of this title;
>
> (ii) respond to a reply under section 132, or to an appeal taken under section 134, within 4 months after the date on which the reply was filed or the appeal was taken;
>
> (iii) act on an application within 4 months after the date of a decision by the Board of Patent Appeals and Interferences under section 134 or 135 or a decision by a Federal court under section 141, 145, or 146 in a case in which allowable claims remain in the application; or
>
> (iv) issue a patent within 4 months after the date on which the issue fee was paid under section 151 and all outstanding requirements were satisfied, the term of the patent shall be extended 1 day for each day after the end of the period specified in clause (i), (ii), (iii), or (iv), as the case may be, until the action described in such clause is taken.
>
> (B) GUARANTEE OF NO MORE THAN 3-YEAR APPLICATION PENDENCY. — Subject to the limitations under paragraph (2), if the issue of an original patent is delayed due to the failure of the United States Patent and Trademark Office to

---

[2] Public Law 106-113, 113 Stat. 1501, 1501A-557 through 1501A-560 (1999).

issue a patent within 3 years after the actual filing date of the application in the United States, not including —

(i) any time consumed by continued examination of the application requested by the applicant under section 132(b);

(ii) any time consumed by a proceeding under section 135(a), any time consumed by the imposition of an order under section 181, or any time consumed by appellate review by the Board of Patent Appeals and Interferences or by a Federal court; or

(iii) any delay in the processing of the application by the United States Patent and Trademark Office requested by the applicant except as permitted by paragraph (3)(C), the term of the patent shall be extended 1 day for each day after the end of that 3-year period until the patent is issued.

(C) GUARANTEE OR ADJUSTMENTS FOR DELAYS DUE TO INTERFERENCES, SECRECY ORDERS, AND APPEALS. — Subject to the limitations under paragraph (2), if the issue of an original patent is delayed due to —

(i) a proceeding under section 135(a);

(ii) the imposition of an order under section 181; or

(iii) appellate review by the Board of Patent Appeals and Interferences or by a Federal court in a case in which the patent was issued under a decision in the review reversing an adverse determination of patentability, the term of the patent shall be extended 1 day for each day of the pendency of the proceeding, order, or review, as the case may be.

(2) LIMITATIONS. —

(A) IN GENERAL. — To the extent that periods of delay attributable to grounds specified in paragraph (1) overlap, the period of any adjustment granted under this subsection shall not exceed the actual number of days the issuance of the patent was delayed.

The implementing regulation, 37 CFR § 1.702, provides grounds for adjustment of patent term due to examination delay under the Patent Term Guarantee Act of 1999 (original applications, other than designs, filed on or after May 29, 2000).

(a) Failure to take certain actions within specified time frames. Subject to the provisions of 35 U.S.C. 154(b) and this subpart, the term of an original patent shall be adjusted if the issuance of the patent was delayed due to the failure of the Office to:

(1) Mail at least one of a notification under 35 U.S.C. 132 or a notice of allowance under 35 U.S.C. 151 not later than fourteen months after the date on which the application was filed under 35 U.S.C. 111(a) or fulfilled the requirements of 35 U.S.C. 371 in an international application;

(2) Respond to a reply under 35 U.S.C. 132 or to an appeal taken under 35 U.S.C. 134 not later than four months after the date on which the reply was filed or the appeal was taken;

(3) Act on an application not later than four months after the date of a decision by the Board of Patent Appeals and Interferences under 35 U.S.C. 134 or 135 or a decision by a Federal court under 35 U.S.C. 141, 145, or 146 where at least one allowable claim remains in the application; or

(4) Issue a patent not later than four months after the date on which the issue fee was paid under 35 U.S.C. 151 and all outstanding requirements were satisfied.

(b) Failure to issue a patent within three years of the actual filing date of the application. Subject to the provisions of 35 U.S.C. 154(b) and this subpart, the term of an original patent shall be adjusted if the issuance of the patent was delayed due to the failure of the Office to issue a patent within three years after the date on which the application was filed under 35 U.S.C. 111(a) or the national stage commenced under 35 U.S.C. 371(b) or (f) in an international application, but not including[3]:

---

[3] (1) Any time consumed by continued examination of the application under 35 U.S.C. 132(b);

(2) Any time consumed by an interference proceeding under 35 U.S.C. 135(a);

(3) Any time consumed by the imposition of a secrecy order under 35 U.S.C. 181;

(4) Any time consumed by review by the Board of Patent Appeals and Interferences or a Federal court; or

(5) Any delay in the processing of the application by the Office that was requested by the applicant.

In pertinent part, 37 CFR § 1.703 provides for calculation of the periods, as follows:

Period of adjustment of patent term due to examination delay.

(a) The period of adjustment under § 1.702(a) is the sum of the following periods:

(1) The number of days, if any, in the period beginning on the day after the date that is fourteen months after the date on which the application was filed under 35 U.S.C. 111(a) or fulfilled the requirements of 35 U.S.C. 371 and ending on the date of mailing of either an action under 35 U.S.C. 132, or a notice of allowance under 35 U.S.C. 151, whichever occurs first;

(2) The number of days, if any, in the period beginning on the day after the date that is four months after the date a reply under § 1.111 was filed and ending on the date of mailing of either an action under 35 U.S.C. 132, or a notice of allowance under 35 U.S.C. 151, whichever occurs first;

(3) The number of days, if any, in the period beginning on the day after the date that is four months after the date a reply in compliance with § 1.113(c) was filed and ending on the date of mailing of either an action under 35 U.S.C. 132, or a notice of allowance under 35 U.S.C. 151, whichever occurs first;

(4) The number of days, if any, in the period beginning on the day after the date that is four months after the date an appeal brief in compliance with § 41.37 of this title was filed and ending on the date of mailing of any of an examiner's answer under § 41.39 of this title, an action under 35 U.S.C. 132, or a notice of allowance under 35 U.S.C. 151, whichever occurs first;

(5) The number of days, if any, in the period beginning on the day after the date that is four months after the date of a final decision by the Board of Patent Appeals and Interferences or by a Federal court in an appeal under 35 U.S.C. 141 or a civil action under 35 U.S.C. 145 or 146 where at least one allowable claim remains in the application and ending on the date of mailing of either an action under 35 U.S.C. 132 or a notice of allowance under 35 U.S.C. 151, whichever occurs first; and

(6) The number of days, if any, in the period beginning on the day after the date that is four months after the date the issue fee was paid and all outstanding requirements were satisfied and ending on the date a patent was issued.

(b) The period of adjustment under § 1.702(b) is the number of days, if any, in the period beginning on the day after the date that is three years after the date on which the application was filed under 35 U.S.C. 111(a) or the national stage commenced under 35 U.S.C. 371(b) or (f) in an international application and ending on the date a patent was issued, but not including the sum of the following periods[4]:

37 CFR 1.703(f) provides that:

The adjustment will run from the expiration date of the patent as set forth in 35 U.S.C. 154(a)(2). To the extent that periods of delay attributable to the grounds specified in §1.702 overlap, the period of adjustment granted under this section shall not exceed the actual number of days the issuance of the patent was delayed. The term of a patent entitled to adjustment under § 1.702 and this section shall be adjusted for the sum of the periods calculated under paragraphs (a) through (e) of this

[4] (1) The number of days, if any, in the period beginning on the date on which a request for continued examination of the application under 35 U.S.C. 132(b) was filed and ending on the date the patent was issued;

(2)(i) The number of days, if any, in the period beginning on the date an interference was declared or redeclared to involve the application in the interference and ending on the date that the interference was terminated with respect to the application; and (ii) The number of days, if any, in the period beginning on the date prosecution in the application was suspended by the Office due to interference proceedings under 35 U.S.C. 135(a) not involving the application and ending on the date of the termination of the suspension;

(3)(i) The number of days, if any, the application was maintained in a sealed condition under 35 U.S.C. 181; (ii) The number of days, if any, in the period beginning on the date of mailing of an examiner's answer under § 41.39 of this title in the application under secrecy order and ending on the date the secrecy order was removed; (iii) The number of days, if any, in the period beginning on the date applicant was notified that an interference would be declared but for the secrecy order and ending on the date the secrecy order was removed; and (iv) The number of days, if any, in the period beginning on the date of notification under § 5.3(c) of this chapter and ending on the date of mailing of the notice of allowance under 35 U.S.C. 151; and,

(4) The number of days, if any, in the period beginning on the date on which a notice of appeal to the Board of Patent Appeals and Interferences was filed under 35 U.S.C. 134 and § 41.31 of this title and ending on the date of the last decision by the Board of Patent Appeals and Interferences or by a Federal court in an appeal under 35 U.S.C. 141 or a civil action under 35 U.S.C. 145, or on the date of mailing of either an action under 35 U.S.C. 132, or a notice of allowance under 35 U.S.C. 151, whichever occurs first, if the appeal did not result in a decision by the Board of Patent Appeals and Interferences.

section, to the extent that such periods are not overlapping, less the sum of the periods calculated under § 1.704. The date indicated on any certificate of mailing or transmission under § 1.8 shall not be taken into account in this calculation.

OPINION

Patentees' argument has again been considered, but is not persuasive. The Office's calculation of "B delay" is correct. The "B delay" is an adjustment entered if the issuance of the patent was delayed due to the failure of the Office to issue a patent within three years after the date on which the application was filed. However, the adjustment does not include, among other things, any time consumed by continued examination of the application at the request of the applicant under 35 U.S.C. 132(b)[5]. So, with respect to calculating the "B delay" where applicant has filed a request for continued examination, the period of adjustment is the number of days, if any, in the period beginning on the day after the date that is three years after the date on which the application was filed under 35 U.S.C. 111(a) or the national stage commenced under 35 U.S.C. 371(b) or (f) in an international application and ending on the date a patent was issued, but not including the number of days in the period beginning on the date on which a request for continued examination of the application under 35 U.S.C. 132(b) was filed and ending on the date the patent was issued.

---

[5] Pursuant to 35 U.S.C. 132(b), 37 CFR 1.114 provides for continued examination of an application, as follows:

(a) If prosecution in an application is closed, an applicant may request continued examination of the application by filing a submission and the fee set forth in § 1.17(e) prior to the earliest of:

(1) Payment of the issue fee, unless a petition under § 1.313 is granted;

(2) Abandonment of the application; or

(3) The filing of a notice of appeal to the U.S. Court of Appeals for the Federal Circuit under 35 U.S.C. 141, or the commencement of a civil action under 35 U.S.C. 145 or 146, unless the appeal or civil action is terminated.

(b) Prosecution in an application is closed as used in this section means that the application is under appeal, or that the last Office action is a final action (§ 1.113), a notice of allowance (§ 1.311), or an action that otherwise closes prosecution in the application.

Further, counting the period of time excluded from the "B delay" for the filing of a request for continued examination under 35 U.S.C. 132(b), from the date on which the request for continued examination is filed to the date the patent is issued is proper. Patentee does not dispute that time consumed by continued examination of an application under 35 U.S.C. 132(b) is properly excluded and that the calculation of the excluded period begins on the date of filing of the request for continued examination. At issue is what further processing or examination beyond the date of filing of the request for continued examination is not any time consumed by continued examination of the application under 35 U.S.C. 132(b). The USPTO indicated in September of 2000 in the final rule to implement the patent term adjustment provisions of the AIPA that once a request for continued examination under 35 U.S.C. 132(b) and 37 CFR 1.114 is filed in an application, any further processing or examination of the application, including granting of a patent, is by virtue of the continued examination given to the application under 35 U.S.C. 132(b) and CFR 1.114. See Changes to Implement Patent Term Adjustment under Twenty-Year Patent Term, 65 Fed. Reg. 56366, 56376 (Sept. 18, 2000) (response to comment 8). Thus, the excluded period begins with the filing of the request for continued examination and ends with the issuance of the patent.

Patentees' argument that the period of time after the issuance of a notice of allowance on a request for continued examination is not "any time consumed by continued examination requested by the applicant under section 132(b)" within the meaning of 35 U.S.C. 154(b)(1)(B)(i) is not availing. This limitation is not supported by the statutory language. Garcia v. United States, 469 U.S. 70, 75 (1984) ("only the most extraordinary showing of contrary intentions from [legislative history] would justify a limitation on the 'plain meaning' of the statutory language"). BP Am. Prod. Co. v. Burton, 549 U.S. 84, 91 (2006) ("Unless otherwise defined, statutory terms are generally interpreted in accordance with their ordinary meaning"). The statute provides for a guarantee of no more than 3-year application pendency, by providing for an adjustment in the patent term:

First, "Subject to the limitations of paragraph (2)," means that the limitations of paragraph 2 apply to this paragraph's adjustment of patent term. That is, the day-to-day extension of patent term for pendency beyond the 3 year period is restricted as follows: 1) "B delay" cannot accrue for days of "A delay"

that overlap, 2) the patent term cannot be extended beyond disclaimed term, and 3) the period of adjustment, including accrued "B delay," will be reduced for applicant delay.

Second, "if the issue of an original patent is delayed due to the failure of the United States Patent and Trademark Office

to issue a patent within 3 years after the actual filing date of the application in the United States," meaning that the condition must first occur that the issuance of an original patent (35 U.S.C. 153), not merely the issuance of a notice of allowance, is delayed due to the Office's failure to issue a patent (sign and record a patent grant in the name of the United States), not merely mail a notice of allowance, within 3 years after the actual filing date of the application in the United States. This provision gives the Office a three-year period to issue a patent (sign and record a patent grant in the name of the United States) after the application filing date before an adjustment will accrue for "B delay."

Third, "not including- (i) any time consumed by continued examination of the application requested by the applicant under section 132(b); (ii) any time consumed by a proceeding under section 135(a), any time consumed by the imposition of an order under section 181, or any time consumed by appellate review by the Board of Patent Appeals and Interferences or by a Federal court; or (iii) any delay in the processing of the application by the United States Patent and Trademark Office requested by the applicant except as permitted by paragraph (3)(C), meaning that the three-year period does not include "any time consumed by" or "any delay in processing," as specified in clauses (i)-(iii). This language correlates to 35 U.S.C. 154(b)(1)(A) which likewise provides the basis for determining the period given the Office to take the specified actions before an adjustment will accrue for "A delay" (e.g., extended for 1 day after the day after the period specified in clauses (i)-(iv)).

Furthermore, these clauses are interpreted using their ordinary meanings. Nonetheless, the context of the legislation should be considered. As stated in Wyeth v. Dudas, 580 F. Supp.2d 138(D.D.C., September 30, 2008), because the clock for calculating the 20-year patent term begins to run on the filing date, and not on the day the patent is actually granted, some of the effective term of a patent is consumed by the time it takes to prosecute the application. To mitigate this effect, the

statute, *inter alia*, grants adjustments of patent term whenever the patent prosecution takes more than three years, regardless of the reason. The time consumed by prosecution of the application includes every day the application is pending before the Office from the actual filing date of the application in the United States until the date of issuance of the patent. The time it takes to prosecute the application ends not with the mailing of the notice of allowance, but with the issuance of the patent.

Thus, not including "any time consumed by" means not including any days used to prosecute the application as specified in clauses (i)-(ii)[6]. Clause (i) specifies "any time consumed by continued examination of the application requested by the applicant under section 132(b)." Clause (ii) specifies "any time consumed by a proceeding under section 135(a), any time consumed by the imposition of an order under section 181, or any time consumed by appellate review by the Board of Patent Appeals and Interferences or by a Federal court." "Time" in the context of this legislation throughout refers to days. "Consumed by" means used by or used in the course of. *Websters Collegiate Dictionary*, (11th ed.). The "any" signifies that the days consumed by are "any" of the days in the pendency of the application, and not just days that occur after the application has been pending for 3 years. As such, "any time consumed by" refers to any days used in the course of 1) continued examination of the application under section 132(b)(the filing of a request for continued examination), 2) interference proceedings, 3) secrecy orders, and 4) appellate review. Thus, that 3-year period given to the Office to issue a patent before an adjustment will accrue for "B delay" does not include any days used in the course of or any time consumed by clauses (i)-(ii), including any time consumed by the filing of a request for continued examination.

---

[6] Clause (iii) provides for not including (iii) any delay in the processing of the application by the United States Patent and Trademark Office requested by the applicant except as permitted by paragraph (3)(C), the term of the patent shall be extended 1 day for each day after the end of that 3-year period until the patent is issued. It is noted that paragraph (3)(C) allows with an adequate showing by applicant for reinstatement of no more than 3 months of the patent term reduced for applicant delay in taking in excess of three months to respond.

Fourth, "the term of the patent shall be extended 1 day for each day after the end of that 3-year period until the patent is issued" meaning that the consequence of this failure is that after "the end of that 3-year period" an additional 1 day of patent term will accrue for each day that the application is pending until the day the patent is issued.

The "time consumed by" or used in the course of the continued examination of the application requested by the applicant under section 132(b) does not end until issuance of the patent. 35 U.S.C. 132(b) was enacted under the same title, the "American Inventors Protection Act of 1999," as 35 U.S.C. 154(b). Section 4403 of the AIPA amended 35 U.S.C. § 132 to provide, at the request of the applicant, for continued examination of an application for a fee (request for continued examination or RCE practice), without requiring the applicant to file a continuing application under 37 CFR 1.53(b) or a continued prosecution application (CPA) under 37 CFR 1.53(d). Thus, clause (i) is different from clause (ii) in that clause (i) refers to an examination process whereas clause (ii) refers to time consumed by proceedings (interferences, secrecy orders and appeals) in an application.

By nature, the time used in the course of the examination process continues to issuance of the patent. The examination process involves examining the application to ascertain whether it appears that the applicant is entitled to a patent under the law. See 35 U.S.C. 131 ("[t]he Director shall cause an examination to be made of the application and the alleged new invention; and if on such examination it appears that the applicant is entitled to a patent under the law, the Director shall issue a patent therefor"). If on examination it appears that the applicant is entitled to a patent, the USPTO issues a notice of allowance. See 35 U.S.C. 151 ("[i]f it appears that applicant is entitled to a patent under the law, a written notice of allowance of the application shall be given or mailed to the applicant"). If on examination it appears that the applicant is not entitled to a patent, the USPTO issues a notice (an Office action) stating the applicable rejection, objection, or other requirement, with the reasons therefor. See 35 U.S.C. 132 ("[w]henever, on examination, any claim for a patent is rejected, or any objection or requirement made, the Director shall notify the applicant thereof, stating the reasons for such rejection, or objection or requirement, together with such information and references as may be useful in judging of the

propriety of continuing the prosecution of his application"). Neither the issuance of a notice of allowance nor the insurance of an Office action terminates the examination process. If after the issuance of an Office action under 35 U.S.C. 132 it subsequently appears that the applicant is entitled to a patent (e.g., in response to an argument or amendment by the applicant), the USPTO will issue a notice of allowance.

Conversely, if after the issuance of a notice of allowance under 35 U.S.C. 151 it subsequently appears that the applicant is not entitled to a patent (e.g., in response to information provided by the applicant or uncovered by the USPTO), the USPTO will withdraw the application from issuance and issue an Office action under 35 U.S.C. 132 stating the applicable rejection, objection, or other requirement, with the reasons therefor.

As held in Blacklight Power, the USPTO's responsibility to issue a patent containing only patentable claims does not end with the issuance of a notice of allowance under 35 U.S.C. 151. See BlackLight Power, Inc. v. Rogan, 295 F.3d 1269, 1273 (Fed. Cir. 2002). Rather, if there is any substantial, reasonable ground within the knowledge or cognizance of the Director as to why an application should not issue, it is the USPTO's duty to refuse to issue the patent even if a notice of allowance has previously been issued for the application. See In re Drawbaugh, 9 App. D.C. 219, 240 (D.C. Cir 1896).

Moreover, the applicant continues to be engaged in the examination process after the mailing of the notice of allowance. 37 CFR 1.56 makes clear that the applicant has a duty to disclose information material to patentability as long as the application is pending before the USPTO (i.e., until a patent is granted or the application is abandoned). See 37 CFR 1.56(a) ("[t]he duty to disclose information exists with respect to each pending claim until the claim is cancelled or withdrawn from consideration, or the application becomes abandoned"). 37 CFR 1.97 and 1.98 provide for the consideration of information submitted by the applicant after a notice of allowance has been mailed. See 37 CFR 1.97(d). In addition, 37 CFR 1.312 provides for the amendment of an application after a notice of allowance has been mailed. In fact, the request for examination procedures[7] permit the filing of a request for continued examination under

[7] Thus, on occasion, even where a request for continued examination has already been filed and a notice of allowance issued pursuant to that request, applicant may file a further request for continued examination.

37 CFR 1.114 even after the issuance of a notice of allowance under 35 U.S.C. 151. See 37 CFR 1.114(a)(1).

As the examination process does not terminate with the mailing of the notice of allowance, the time consumed by continued examination requested by the applicant under section 132(b) does not terminate with the mailing of the notice of allowance. All the time the application is pending from the

date of filing of the request for continued examination to the mailing of the notice of allowance through issuance of the patent is a consequence of the filing of the request for continued examination. Further action by the Office is pursuant to that request. Applicant has gotten further prosecution of the application without having to file a continuing application under 37 CFR 1.53(b).

All of the continued examination pursuant to the filing of the request by the applicant is properly excluded from the delay attributed to the Office. 35 U.S.C. 154(b)(1)(B)'s guarantee of a total application pendency of no more than three years provides for adjustment of the patent term for delay due to the Office's failure to issue the patent within three years, but does not include "any time consumed by continued examination requested by the applicant under 35 U.S.C. 132(b)." It is not necessary to mitigate the effect on the 20-year term to the extent that applicant has requested that the Office continue to examine the application via a request for continued examination, in lieu of, the filing of a continuing application under 37 CFR 1.53(b).

In this instance, a request for continued examination was filed on September 16, 2010, and the patent issued by virtue of that request on February 15, 2011. Pursuant to 35 U.S.C. 154(b)(1)(B)(i), the period beginning on September 16, 2010, and ending on February' 15, 2011, is not included in calculating Office delay. In view thereof, it is concluded that the patent term adjustment of 1,374 days is correct.

CONCLUSION

The request for reconsideration of the revised patent term adjustment is denied.

The Office acknowledges that patentees previously submitted the $200 fee set forth in §1.18(e) on application for patent term adjustment filed April 15, 2011. As this request pertains only to the over 3-year delay issue raised in the application for patent term adjustment, no additional fees are required. The amount of $200.00 will be refunded, in due course.

Telephone inquiries specific to this matter should be directed to Kenya A. McLaughlin. Petitions Attorney, (571) 272-3222.

Anthony Knight
Director
Office of Petitions

UNITED STATES PATENT AND TRADEMARK OFFICE

UNITED STATES DEPARTMENT OF COMMERCE
United States Patent and Trademark Office
Address: COMMISSIONER FOR PATENTS
P.O. Box 1450
Alexandria, Virginia 22313-1450
www.uspto.gov

APPLICATION NO.	FILING DATE	FIRST NAMED INVENTOR	ATTORNEY DOCKET NO.	CONFIRMATION NO.
11/247,204	10/12/2005	Youn-ho Kim	1793.1760	8894

21171 7590 10/24/2011
STAAS & HALSEY LLP
SUITE 700
1201 NEW YORK AVENUE, N.W.
WASHINGTON, DC 20005

EXAMINER
ARCHER, MARIE

ART UNIT	PAPER NUMBER
3769	

MAIL DATE	DELIVERY MODE
10/24/2011	PAPER

Please find below and/or attached an Office communication concerning this application or proceeding.

The time period for reply, if any, is set in the attached communication.

UNITED STATES PATENT AND TRADEMARK OFFICE

Commissioner for Patents
United States Patent and Trademark Office
P.O. Box 1450
Alexandria, VA 22311
www.uspto.gov

STAAS & HALSEY LLP
SUITE 700
1201 NEW YORK AVENUE, N.W.
WASHINGTON DC 20005

In re Application of:
KIM, YOUN-HO et al
Serial No.: 11/247,204
Filed: Oct. 12, 2005
Attorney Docket No.: 1793.1760
Title: METHOD, MEDIUM, AND APPARATUS GENERATING HEALTH STATE BASED AVATARS

DECISION ON PETITION

This is a decision on the petition filed on October 11, 2011 seeking withdrawal of the finality of the Office action mailed May 9, 2011. This petition is being considered pursuant to 37 CFR §1.181. No fee is required.

The petition is dismissed as untimely.

In the October 11, 2011 petition, the petitioner requests the finality of the Office action of May 9, 2011 be reconsidered and withdrawn because the applicant believes that the final rejection was premature. In particular, petitioner argues that the examiner's new grounds of rejection were not necessitated by the applicant's amendment of June 11, 2010.

A further review of the file record shows that the instant petition was filed more than five months after the mailing date of the final Office action of May 9, 2011. Pursuant to 37 CFR 1.181(f)[1], the petition is not timely filed since the petition was not filed within two months of the action complained of. As the petition was not timely filed, the requested withdrawal of finality of the

[1] 37 CFR 1.181(f): The mere filing of a petition will not stay any period for reply that may be running against the application, nor act as a stay of other proceedings. Any petition under this part not filed within two months of the mailing date of the action or notice from which relief is requested may be dismissed as untimely, except as otherwise provided. This two-month period is not extendable.

Office action of May 9, 2011 will not be granted. Based on the reasons as stated above, petitioner's request to withdraw the finality of the Office action dated May 9, 2011 is hereby dismissed as untimely.

Any request for reconsideration of this decision must be submitted within TWO (2) MONTHS from the mail date of this decision, 37 CFR 1.181(f). No extension of time under 37 CFR 1.136(a) is permitted. The reconsideration request should include a cover letter entitled "Renewed Petition under 37 CFR 1.181". The mere filing of a petition will not stay any period for reply that may be running against the application, nor act as a stay of other proceedings.

Any inquiry regarding this decision should be directed to Henry Yuen, Special Programs Examiner, at (571) 272-4856.

PETITION DISMISSED AS UNTIMELY.

Angela D. Sykes, Director
Technology Center 3700

UNITED STATES PATENT AND TRADEMARK OFFICE

COMMISSIONER FOR PATENTS
UNITED STATES PATENT AND TRADEMARK OFFICE
P.O. BOX 1450
ALEXANDRIA, VA 22313-1450
www.uspto.gov

Morgan Lewis & Bockius LLP
1111 Pennsylvania Avenue NW
Washington DC 20004

MAILED
AUG 25 2011
OFFICE OF PETITIONS

In re Patent No.7,498,040	:
Masinaei et al.	: DECISION UPON REMAND AND
Issue Date: March 3, 2009	: RECONSIDERATION OF
Application No. 11/247,229	: PATENT TERM ADJUSTMENT
Filed: October 12, 2005	: AND NOTICE OF INTENT
Attorney Docket No. 067949-5024US	: TO ISSUE CERTIFICATE OF CORRECTION
Title: Compositions for Repair of Defects in Osseus Tissues and Methods of making the same	:

This is a decision following remand from the District Court for the District of Columbia regarding the patent term adjustment indicated on the above-identified patent. The Court remanded this matter to the U.S. Patent and Trademark Office for recalculation of the patent term adjustment in accordance with the decision in Wyeth & Elan Pharma Int'l Ltd. v. Kappos, 591 F.3d 1364 (Fed. Cir. 2010).

The patent term adjustment indicated on the above-identified patent has been recalculated as directed by the Court. The term of the above-identified patent is extended or adjusted by two hundred and thirty-three (233) days.

The application is being forwarded to the Certificates Branch for issuance of a certificate of correction indicating that the term of the above-identified patent is extended or adjusted by two hundred and nine (233) days.

Telephone inquiries specific to this matter should be directed to Senior Legal Advisor, Kery A. Fries at (571) 272-7757.

/Kery A. Fries/

Kery A. Fries
Senior Legal Advisor Attorney
Office of Patent Legal Administration
Office of Associate Commissioner
For Patent Examination Policy

Enclosure: Copy of DRAFT Certificate of Correction

UNITED STATES PATENT AND TRADEMARK OFFICE

CERTIFICATE OF CORRECTION

PATENT : 7,498,040

DATED : March 3, 2009 **DRAFT**

INVENTOR(S) : Masinaei et al.

It is certified that error appears in the above-identified patent and that said Letters Patent is hereby corrected as shown below:

On the cover page,

[*] Notice: Subject to any disclaimer, the term of this patent is extended or adjusted under 35 USC 154(b) by 107 days

Delete the phrase "by 107 days" and insert – by 233 days--

UNITED STATES PATENT AND TRADEMARK OFFICE

Commissioner for Patents
United States Patent and Trademark Office
P.O. Box 1450
Alexandria, VA 22313-1450
www.uspto.gov

Louis J. Wille
Bristol-Myers Squibb Company
Patent Department
PO Box 4000
Princeton, NJ 08543-4000

MAILED
OCT 04 2010
OFFICE OF PETITIONS

In re Patent No. 7,517,991	:
Sher et al.	: DECISION UPON REMAND AND
Issue Date: April 14, 2009	: RECONSIDERATION OF
Application No. 11/247,492	: PATENT TERM ADJUSTMENT
Filed: October 11, 2005	: AND NOTICE OF INTENT
Attorney Docket No. 10007 NP	: TO ISSUE CERTIFICATE OF
Title: N-Sulfonylpiperidine	: CORRECTION
Cannabinoid Receptor 1	:
Antagonists	

This is a decision following remand from the District Court for the District of Columbia regarding the patent term adjustment indicated on the above-identified patent. The Court remanded this matter to the U.S. Patent and Trademark Office for recalculation of the patent term adjustment in accordance with the decision in Wyeth & Elan Pharma Int'l Ltd. v. Kappos, 591 F.3d 1364 (Fed. Cir. 2010).

The patent term adjustment indicated on the above-identified patent has been recalculated as directed by the Court. The term of the above-identified patent is extended or adjusted by five hundred and forty-nine (549) days.

The application is being forwarded to the Certificates Branch for issuance of a certificate of correction indicating that the term of the above-identified patent is extended or adjusted by five hundred and thirty-two (549) days.

Telephone inquiries specific to this matter should be directed to Senior Legal Advisor Kery A. Fries at (571) 272-7757.

/Kery A. Fries/

Kery Fries
Senior Legal Advisor Attorney
Office of Patent Legal Administration
Office of Associate Commissioner
For Patent Examination Policy

Enclosure: Copy of DRAFT Certificate of Correction

UNITED STATES PATENT AND TRADEMARK OFFICE

CERTIFICATE OF CORRECTION

PATENT : 7,517,991

DATED : **April 14, 2009** **DRAFT**

INVENTOR(S) : Sher et al..

It is certified that error appears in the above-identified patent and that said Letters Patent is hereby corrected as shown below:

On the cover page,

[*] Notice: Subject to any disclaimer, the term of this patent is extended or adjusted under 35 USC 154(b) by 364 days

Delete the phrase "by 364 " and insert – by 549 days--

Day : Friday
Date: 10/1/2010

PALM INTRANET

Time: 10:37:20

PTA Calculations for Application: 11/247492			
Application Filing Date:	10/11/2005	PTO Delay (PTO):	364
Issue Date of Patent:	04/14/2009	Three Years:	0
Pre-Issue Petitions:	0	Applicant Delay (APPL):	0
Post-Issue Petitions:	0	Total PTA (days):	549
PTO Delay Adjustment:	185		

File Contents History

Number	Date	Contents Description	PTO	APPL	START
87	10/01/2010	ADJUSTMENT OF PTA CALCULATION BY PTO	185		
79.5	03/25/2009	PTA 36 MONTHS			
79	04/14/2009	PATENT ISSUE DATE USED IN PTA CALCULATION			
78	03/18/2009	EXPORT TO FINAL DATA CAPTURE			
77	03/13/2009	FINISHED INITIAL DATA CAPTURE			
76	03/13/2009	DISPATCH TO FDC			
75	03/13/2009	APPLICATION IS CONSIDERED READY FOR ISSUE			
74	03/03/2009	ISSUE FEE PAYMENT VERIFIED			
73	03/03/2009	ISSUE FEE PAYMENT RECEIVED			
72	01/05/2009	EXPORT TO INITIAL DATA CAPTURE			
69	01/02/2009	MAIL NOTICE OF ALLOWANCE			
68	12/24/2008	ISSUE REVISION COMPLETED			
67	12/24/2008	DOCUMENT VERIFICATION			
66	12/24/2008	NOTICE OF ALLOWANCE DATA VERIFICATION COMPLETED			
65	12/22/2008	NOTICE OF ALLOWABILITY			
64	12/13/2008	EMAIL NOTIFICATION			
63	12/12/2008	DATE FORWARDED TO EXAMINER			
62	12/10/2008	AMENDMENT AFTER FINAL REJECTION			
61	12/12/2008	MAIL EXAMINER INTERVIEW SUMMARY (PTOL - 413)			
60	12/04/2008	EXAMINER INTERVIEW SUMMARY RECORD (PTOL - 413)			
59	09/12/2008	ELECTRONIC REVIEW			
58	09/12/2008	EMAIL NOTIFICATION			

57	09/12/2008	MAIL FINAL REJECTION (PTOL - 326)			
56	09/10/2008	FINAL REJECTION			
55	06/30/2008	DATE FORWARDED TO EXAMINER			
54	06/10/2008	RESPONSE AFTER NON-FINAL ACTION			
53	06/10/2008	EMAIL NOTIFICATION			
52	06/10/2008	MAIL EXAMINER INTERVIEW SUMMARY (PTOL - 413)			
51	06/03/2008	EXAMINER INTERVIEW SUMMARY RECORD (PTOL - 413)			
49	02/15/2008	AMENDMENT CROSSED IN MAIL			
48	03/11/2008	ELECTRONIC REVIEW			
47	03/10/2008	EMAIL NOTIFICATION			
46	03/10/2008	MAIL NON-FINAL REJECTION			
45	02/28/2008	NON-FINAL REJECTION			
40	12/27/2005	INFORMATION DISCLOSURE STATEMENT CONSIDERED			
39	10/16/2006	INFORMATION DISCLOSURE STATEMENT CONSIDERED			
38	11/30/2006	INFORMATION DISCLOSURE STATEMENT CONSIDERED			
37	02/08/2008	INFORMATION DISCLOSURE STATEMENT CONSIDERED			
35	02/08/2008	INFORMATION DISCLOSURE STATEMENT (IDS) FILED		0	33
34	02/20/2008	DATE FORWARDED TO EXAMINER			
33	02/08/2008	RESPONSE TO ELECTION / RESTRICTION FILED			
32	02/08/2008	REQUEST FOR EXTENSION OF TIME - GRANTED			
31	02/08/2008	INFORMATION DISCLOSURE STATEMENT (IDS) FILED			
30	12/11/2007	ELECTRONIC REVIEW			
29	12/10/2007	EMAIL NOTIFICATION			
28	12/10/2007	MAIL RESTRICTION REQUIREMENT	364		-1
27	12/06/2007	REQUIREMENT FOR RESTRICTION / ELECTION			
22	11/14/2007	CASE DOCKETED TO EXAMINER IN GAU			
21	10/09/2007	CASE DOCKETED TO EXAMINER IN GAU			
20	03/19/2007	CASE DOCKETED TO EXAMINER IN GAU			
19	01/15/2007	CASE DOCKETED TO EXAMINER IN GAU			
18.7	11/30/2006	INFORMATION DISCLOSURE STATEMENT (IDS) FILED			
		INFORMATION DISCLOSURE STATEMENT (IDS)			

18	11/30/2006	FILED			
17.7	10/16/2006	INFORMATION DISCLOSURE STATEMENT (IDS) FILED			
17	10/16/2006	INFORMATION DISCLOSURE STATEMENT (IDS) FILED			
16	07/26/2006	CASE DOCKETED TO EXAMINER IN GAU			
15	01/26/2006	IFW TSS PROCESSING BY TECH CENTER COMPLETE			
13	01/18/2006	CASE DOCKETED TO EXAMINER IN GAU			
12	12/27/2005	REFERENCE CAPTURE ON IDS			
11.7	12/27/2005	INFORMATION DISCLOSURE STATEMENT (IDS) FILED			
11	12/27/2005	INFORMATION DISCLOSURE STATEMENT (IDS) FILED			
10	12/06/2005	APPLICATION DISPATCHED FROM OIPE			
9	12/06/2005	APPLICATION IS NOW COMPLETE			
8	11/28/2005	ADDITIONAL APPLICATION FILING FEES			
7	11/28/2005	A STATEMENT BY ONE OR MORE INVENTORS SATISFYING THE REQUIREMENT UNDER 35 USC 115, OATH OF THE APPLIC			
6	11/17/2005	NOTICE MAILED--APPLICATION INCOMPLETE--FILING DATE ASSIGNED			
5	11/09/2005	CLEARED BY L&R (LARS)			
4	10/28/2005	REFERRED TO LEVEL 2 (LARS) BY OIPE CSR			
3	10/28/2005	CASE CLASSIFIED BY OIPE			
2	10/22/2005	IFW SCAN & PACR AUTO SECURITY REVIEW			
1	10/11/2005	INITIAL EXAM TEAM NN			

Search Another: Application# Search

EXPLANATION OF PTA CALCULATION

EXPLANATION OF PTE CALCULATION

To go back, right click here and select Back. To go forward, right click here and select Forward. To refresh, right click here and select Refresh.

Back to OASIS | Home page

UNITED STATES PATENT AND TRADEMARK OFFICE

Commissioner for Patents
United States Patent and Trademark Office
P.O. Box 1450
Alexandria, VA 22313-1450
www.uspto.gov

MCDERMOTT WILL & EMERY LLP
600 13TH STREET, N.W.
WASHINGTON DC 20005-3096

MAILED
NOV 22 2010
OFFICE OF PETITIONS

In re Application of	:	
Seiichi Muroya et al.	:	
Application No. 11/247,519	:	DECISION ON PETITION
Filed: October 12, 2005	:	
Attorney Docket No. 071971-0379	:	

This is a decision on the petition under the unintentional provisions of 37 CFR 1.137(b), filed November 5, 2010, to revive the above-identified application.

The application became abandoned for failure to reply in a timely manner to the non-final Office action mailed April 14, 2010, which set a shortened statutory period for reply of three (3) months. A one (1) month extension of time under the provisions of 37 CFR 1.136(a) was obtained. Accordingly, the application became abandoned on August 15, 2010

The petition is **GRANTED**.

The petition satisfies the requirements of 37 CFR 1.137(b) in that petitioner has supplied (1) the reply in the form of an amendment, (2) the petition fee of $1,620, and (3) a proper statement of unintentional delay.

Telephone inquiries concerning this decision should be directed to the undersigned at (571) 272-4584.

This application is being referred to Technology Center AU 2481 for appropriate action by the Examiner in the normal course of business.

JoAnne Burke
Petitions Examiner
Office of Petitions

UNITED STATES PATENT AND TRADEMARK OFFICE

Commissioner for Patents
United States Patent and Trademark Office
P.O. Box 1450
Alexandria, VA 22313-1450
www.uspto.gov

In re Application of
James J. Cordingley

Application No. 11247541

Filed: October 11,2005

Attorney Docket No. GSIL 0173 PUSP41

:DECISION ON PETITION TO MAKE SPECIAL
:UNDER 37 CFR 1.102(c)(1)

This is a decision on the electronic petition under 37 CFR 1.102 (c)(1), filed 27-OCT-2011 to make the above-identified application special based on applicant's age as set forth in MPEP § 708.02, Section IV.

The petition is **GRANTED**.

A grantable petition to make an application special under 37 CFR 1.102(c)(1), MPEP § 708.02, Section IV: Applicant's Age must include a statement by applicant or a registered practitioner having evidence that applicant is at least 65 years of age. No fee is required.

Accordingly, the above-identified application has been accorded "special" status and will be taken up for action by the examiner upon the completion of all pre-examination processing.

Telephone inquiries concerning this electronic decision should be directed to the Electronic Business Center at 866-217-9197.

All other inquiries concerning either the examination or status of the application should be directed to the Technology Center.

Doc code : PET.OP.AGE
Description : Petition to make special based on Age/Health

PTO/SB/130 (07-09)
Approved for use through 07/31/2012. OMB 0651- 0031
U.S. Patent and Trademark Office; U.S. DEPARTMENT OF COMMERCE
Under the Paperwork Reduction Act of 1995, no persons are required to respond to a collection of information unless it contains a valid OMB control number

PETITION TO MAKE SPECIAL BASED ON AGE FOR ADVANCEMENT OF EXAMINATION UNDER 37 CFR 1.102(c)(1)

Application Information

Application Number	11247541	Confirmation Number	8961	Filing Date	
Attorney Docket Number (optional)		Art Unit		Examiner	
First Named Inventor	James J. Cordingley				
Title of Invention	METHODS AND SYSTEMS FOR PRECISELY RELATIVELY POSITIONING A WAIST OF A PULSED LASER BEAM AND METHOD AND SYSTEM FOR CONTROLLING ENERGY DELIVERED TO A TARGET STRUCTURE				

Attention: Office of Petitions

An application may be made special for advancement of examination upon filing of a petition showing that the applicant is 65 years of age, or more. No fee is required with such a petition. See 37 CFR 1.102(c)(1) and MPEP 708.02 (IV).

APPLICANT HEREBY PETITIONS TO MAKE SPECIAL FOR ADVANCEMENT OF EXAMINATION IN THIS APPLICATION UNDER 37 CFR 1.102(c)(1) and MPEP 708.02 (IV) ON THE BASIS OF THE APPLICANT'S AGE.

A grantable petition requires one of the following items:
(1) Statement by one named inventor in the application that he/she is 65 years of age, or more; or
(2) Certification by a registered attorney/agent having evidence such as a birth certificate, passport, driver's license, etc. showing one named inventor in the application is 65 years of age, or more.

Name of Inventor who is 65 years of age, or older

Given Name	Middle Name	Family Name	Suffix
Donald	V.	Smart	

A signature of the applicant or representative is required in accordance with 37 CFR 1.33 and 10.18.
Please see 37 CFR 1.4(d) for the format of the signature.

Select (1) or (2) :

○ (1) I am an inventor in this application and I am 65 years of age, or more.

● (2) I am an attorney or agent registered to practice before the Patent and Trademark Office, and I certify that I am in possession of evidence, and will retain such in the application file record, showing that the inventor listed above is 65 years of age, or more.

Signature	/TomArno/	Date (YYYY-MM-DD)	2011-10-27
Name	Thomas R. Arno	Registration Number	40490

PTO/SB/130 (07-09)
Approved for use through 07/31/2012. OMB 0651- 0031
U.S. Patent and Trademark Office; U.S. DEPARTMENT OF COMMERCE
Under the Paperwork Reduction Act of 1995, no persons are required to respond to a collection of information unless it contains a valid OMB control number

Privacy Act Statement

The Privacy Act of 1974 (P.L. 93-579) requires that you be given certain information in connection with your submission of the attached form related to a patent application or patent. Accordingly, pursuant to the requirements of the Act, please be advised that: (1) the general authority for the collection of this information is 35 U.S.C. 2(b)(2); (2) furnishing of the information solicited is voluntary; and (3) the principal purpose for which the information is used by the U.S. Patent and Trademark Office is to process and/or examine your submission related to a patent application or patent. If you do not furnish the requested information, the U.S. Patent and Trademark Office may not be able to process and/or examine your submission, which may result in termination of proceedings or abandonment of the application or expiration of the patent.

The information provided by you in this form will be subject to the following routine uses:

1. The information on this form will be treated confidentially to the extent allowed under the Freedom of Information Act (5 U.S.C. 552) and the Privacy Act (5 U.S.C. 552a). Records from this system of records may be disclosed to the Department of Justice to determine whether the Fr eedom of Information Act requires disclosure of these records.

2. A record from this system of records may be disclosed, as a routine use, in the course of presenting evidence to a court, magistrate, or administrative tribunal, including disclosures to opposing counsel in the course of settlement negotiations.

3. A record in this system of records may be disclosed, as a routine use, to a Member of Congress submitting a request involving an individual, to whom the record pertains, when the individual has requested assistance from the Member with respect to the subject matter of the record.

4. A record in this system of records may be disclosed, as a routine use, to a contractor of the Agency having need for the information in order to perform a contract. Recipients of information shall be required to comply with the requirements of the Privacy Act of 1974, as amended, pursuant to 5 U.S.C. 552a(m).

5. A record related to an International Application filed under the Patent Cooperation Treaty in this system of records may be disclosed, as a routine use, to the International Bureau of the World Intellectual Property Organization, pursuant to the Patent Cooperation Treaty.

6. A record in this system of records may be disclosed, as a routine use, to another federal agency for purposes of National Security review (35 U.S.C. 181) and for review pursuant to the Atomic Energy Act (42 U.S.C. 218(c)).

7. A record from this system of records may be disclosed, as a routine use, to the Administrator, General Services, or his/her designee, during an inspection of records conducted by GSA as part of that agency's responsibility to recommend improvements in records management practices and programs, under authority of 44 U.S.C. 2904 and 2906. Such disclosure shall be made in accordance with the GSA regulations governing inspection of records for this purpose, and any other relevant (i.e., GSA or Commerce) directive. Such disclosure shall not be used to make determinations about indivi duals.

8. A record from this system of records may be disclosed, as a routine use, to the public after either publication of the application pursuant to 35 U.S.C. 122(b) or issuance of a patent pursuant to 35 U.S.C. 151. Further, a record may be disclosed, subject to the limitations of 37 CFR 1.14, as a routine use, to the public if the record was filed in an application which became abandoned or in which the proceedings were terminated and which application is referenced by either a published application, an application open to public inspections or an issued patent.

9. A record from this system of records may be disclosed, as a routine use, to a Federal, State, or local law enforcement agency, if the USPTO becomes aware of a violation or potential violation of law or regulation.

UNITED STATES PATENT AND TRADEMARK OFFICE

Commissioner for Patents
United States Patent and Trademark Office
P.O. Box 1450
Alexandria, VA 22313-1450
www.uspto.gov

Carefusion C/O Wagner Blecher LLP
123 Westridge Drive
Watsonville CA 95076

MAILED

JAN 03 2011

OFFICE OF PETITIONS

In re Application of	:	
Ihab S. Soliman, et al.	:	
Application No. 11/247,568	:	DECISION ON PETITION
Filed: October 11, 2005	:	
Attorney Docket No. 90261.22100	:	

This is a decision on the petition under the unintentional provisions of 37 CFR 1.137(b), filed December 7, 2010, to revive the above-identified application.

The petition is **GRANTED**.

This application became abandoned for failure to timely pay the issue and publication fees on or before September 29, 2010, as required by the Notice of Allowance and Fee(s) Due, mailed June 29, 2010. Accordingly, the date of abandonment of this application is September 30, 2010. The Notice of Abandonment was mailed October 14, 2010.

The petition satisfies the requirements of 37 CFR 1.137(b) in that petitioner has supplied (1) the reply in the form of payment of the issue fee of $1,510 and the publication fee of $300, (2) the petition fee of $1,620; and (3) a proper statement of unintentional delay.

It is not apparent whether the person signing the statement of unintentional delay was in a position to have firsthand or direct knowledge of the facts and circumstances of the delay at issue. Nevertheless, such statement is being treated as having been made as the result of a reasonable inquiry into the facts and circumstances of such delay. See 37 CFR 10.18(b) and Changes to Patent Practice and Procedure; Final Rule Notice, 62 Fed. Reg. 53131, 53178 (October 10, 1997), 1203 Off. Gaz. Pat. Office 63, 103 (October 21, 1997). In the event that such an inquiry has not been made, petitioner must make such an inquiry. If such inquiry results in the discovery that it is not correct that the entire delay in filing the required reply from the due date for the reply until the filing of a grantable petition pursuant to 37 CFR 1.137(b) was unintentional, petitioner must notify the Office.

There is no indication that the person signing the petition was ever given a power of attorney to prosecute the application. If the person signing the petition desires to receive future correspondence regarding this application, the appropriate power of attorney document must be submitted. While a courtesy copy of this decision is being mailed to the person signing the petition, all future correspondence will be directed to the address currently of record until appropriate instructions are received.

Telephone inquiries concerning this decision should be directed to Terri Johnson at (571) 272-2991.

This application is being referred to the Office of Data Management for processing into a patent.

/Terri Johnson/
Terri Johnson
Petitions Examiner
Office of Petitions

cc: **Michael D. Graham**
1050 Connecticut Avenue, NW
Suite 1100
Washington, DC 20036

SPE RESPONSE FOR CERTIFICATE OF CORRECTION

Paper No.:20110823

DATE : August 23, 2011

TO SPE OF : ART UNIT 2617

SUBJECT : Request for Certificate of Correction on Patent No.: 7,643,850

A response is requested with respect to the accompanying request for a certificate of correction.

Please complete this form and return with file, within **7** days to:
Certificates of Correction Branch - ST (South Tower) 9A22
Palm location **7590** - Tel. No. (703) 305-8309

With respect to the change(s) requested, correcting Office and/or Applicant's errors, should the patent read as shown in the certificate of correction? No new matter should be introduced, nor should the scope or meaning of the claims be changed.

Thank You For Your Assistance **Certificates of Correction Branch**

The request for issuing the above-identified correction(s) is hereby:

Note your decision on the appropriated box.

☒ **Approved** All changes apply.

☐ **Approved in Part** Specify below which changes **do not** apply.

☐ **Denied** State the reasons for denial below.

Comments:

/DWAYNE BOST/
Supervisory Patent Examiner.Art Unit 2617

SPE RESPONSE FOR CERTIFICATE OF CORRECTION

DATE : 02/03/12

TO SPE OF : ART UNIT: 3618 Attn: SHRIVER II JAMES (J. ALLEN) A (SPE)

SUBJECT : Request for Certificate of Correction for Appl. No.: 11/247893 Patent No.: 7681904

CofC mailroom date: 02/01/2012

Please respond to this request for a certificate of correction within 7 days.

FOR IFW FILES:

Please review the requested changes/corrections as shown in the **COCIN** document(s) in the IFW application image. No new matter should be introduced, nor should the scope or meaning of the claims be changed.

Please complete the response (see below) and forward the completed response to scanning using document code **COCX**.

FOR PAPER FILES:

Please review the requested changes/corrections as shown in the attached certificate of correction. Please complete this form (see below) and forward it with the file to:

Certificates of Correction Branch (CofC)
Randolph Square – 9D10-A
Palm Location 7580

Note: **Please check the PTO/SB/44 Form For Related U.S. Application Data**

Tasneem Siddiqui
Certificates of Correction Branch
703-756-1814 & 703-756-1593

Thank you for your assistance

The request for issuing the above-identified correction(s) is hereby:
Note your decision on the appropriate box.

- ☒ **Approved** — **All** changes apply.
- ☐ **Approved in Part** — Specify below which changes **do not** apply.
- ☐ **Denied** — State the reasons for denial below.

Comments: _____

SPE — 3618 Art Unit

UNITED STATES PATENT AND TRADEMARK OFFICE

Commissioner for Patents
United States Patent and Trademark Office
P.O. Box 1450
Alexandria, VA 22313-1450
www.uspto.gov

MAILED
DEC 12 2011
OFFICE OF PETITIONS

FULBRIGHT & JAWORSKI L.L.P.
98 SAN JACINTO BOULEVARD
SUITE 1100
AUSTIN TX 78701-4255

In re Patent of	:
Hoffacker et al.	: ON APPLICATION FOR
Application No. 11/247942	: PATENT TERM ADJUSTMENT
Filing or 371(c) Date: 10/11/2005	:
Pat. Num.: 8,038,734	:
Issue Date: 10/18/2011	:
Atty. Docket No.: LUMN.P0079US	:

This is a decision on the "APPLICATION FOR PATENT TERM ADJUSTMENT UNDER 37 C.F.R § 1.705(d)", filed November 23, 2011, requesting that the patent term adjustment determination for the above-identified patent be changed from 923 days to 1004 days.

The petition to correct the patent term adjustment indicated on the above-identified patent to indicate that the term of the above-identified patent is extended or adjusted by one thousand four (1004) days is **GRANTED**.

The Office acknowledges submission of the $200.00 fee set forth in 37 CFR 1.18(e). No additional fees are required.

The application is being forwarded to the Certificates of Branch for issuance of a certificate of correction. The Office will issue a certificate of correction indicating that the term of the above-identified patent is extended or adjusted by one thousand four **(1004)** days.

Telephone inquiries specific to this matter should be directed to the undersigned at (571) 272-3232.

/DLW/

Derek L. Woods
Attorney
Office of Petitions

Enclosure: Copy of DRAFT Certificate of Correction

UNITED STATES PATENT AND TRADEMARK OFFICE

CERTIFICATE OF CORRECTION

PATENT : 8,038,734 B2

DATED : **October 18, 2011**

INVENTOR(S) : Hoffacker et al..

It is certified that error appears in the above-identified patent and that said Letters Patent is hereby corrected as shown below:

On the cover page,

[*] Notice: Subject to any disclaimer, the term of this patent is extended or adjusted under 35 USC 154(b) by 923 days.

Delete the phrase "by 923 days" and insert – by 1004 days--

UNITED STATES PATENT AND TRADEMARK OFFICE
COMMISSIONER OF PATENTS AND TRADEMARKS
P.O. Box 1450
Alexandria, VA 22313-1450

October 7, 2010

Patent No.: 7,414,496 B2
Applicant : Ngoc-Hoa Huynh
Issued : August 19, 2008
For : **FILTER STRUCTURE AND METHOD FOR THE DESIGN OF A FILTER**

Re: Request for Certificate of Correction

Consideration has been given your request for the issuance of a certificate of correction for the above-identified patent under the provisions of Rule 1.323.

Respecting the alleged errors listed on PTO/SB/44 form, comparison of the printed patent with the corresponding locations in the application file reveals that there is no discrepancy. The requested changes cannot be located in the patent.

In view of the foregoing, your request for certificate of correction is hereby denied.

Further correspondence concerning this matter should be filed and directed to Decisions and Certificates of Correction Branch.

Decisions and Certificates of Correction
Antonio Johnson
(571)272-0483

Maginot, Moore & Beck
Bank One Tower
Suite 3000
111 Monument Circle
Indianapolis IN 46204

UNITED STATES PATENT AND TRADEMARK OFFICE

Commissioner for Patents
United States Patent and Trademark Office
P.O. Box 1450
Alexandria, VA 22313-1450
www.uspto.gov

BIRCH STEWART KOLASCH & BIRCH
PO BOX 747
FALLS CHURCH VA 22040-0747

MAILED

OCT 29 2010

OFFICE OF PETITIONS

In re Application of	:	
Boey et al.	:	DECISION ON PETITION
Application No. 11/248,190	:	TO WITHDRAW
Filed: October 13, 2005	:	FROM RECORD
Attorney Docket No. 5118-0107PUS1	:	

This is a decision on the Request to Withdraw as attorney or agent of record under 37 C.F.R. § 1.36(b), filed October 13, 2010.

The request is **NOT APPROVED**.

The Office will only accept correspondence address changes to the most current address information provided for the assignee of the entire interest *who properly became of record under 37 CFR 3.71,* or, if no assignee of the entire interest has properly been made of record, the most current address information provided for the first named inventor. 37 CFR 3.71(c) states:

> ***An assignee becomes of record either in a national patent application or a reexamination proceeding by filing a statement in compliance with § 3.73(b) that is signed by a party who is authorized to act on behalf of the assignee.***

Therefore, as there is currently no Statement under 37 CFR 3.73(b) of record in the instant application, the Office cannot change the correspondence address to the address on the Request to Withdraw.

All future communications from the Office will continue to be directed to the above-listed address until otherwise notified by applicant.

Currently, there is no outstanding Office action that requires a reply.

Telephone inquires concerning this decision should be directed to the undersigned at (571) 272-7751.

Joan Olszewski

Joan Olszewski
Petitions Examiner
Office of Petitions

UNITED STATES PATENT AND TRADEMARK OFFICE

Commissioner for Patents
United States Patent and Trademark Office
P.O. Box 1450
Alexandria, VA 22313-1450
www.uspto.gov

MAILED
JAN 10 2011
OFFICE OF PETITIONS

Dennis Gross
The Hill Firm
Suite 1201
666 Dundee Rd
Northbrook, IL 60062

In re Patent of Erdogan et al.	:	
Patent No. 7,123,416	:	
Issue Date: October 17, 2006	:	Letter
Application No. 11/248,456	:	
Filing Date: October 11, 2005	:	

This is a notice regarding your request for acceptance of a fee deficiency submission under 37 CFR 1.28(c) filed September 8, 2010.

The deficiency payment of $555 is hereby accepted.

The change of status to large entity has been entered and made of record.

The file does not indicate a change of address has been submitted, although the address given on the petition differs from the address of record. If appropriate, a request to change the address of record should be filed. Although this decision is being mailed to the address given on the petition, the Office will mail all future correspondence solely to the current address of record absent receipt of appropriate instructions to the contrary.

Telephone inquiries regarding this communication should be directed to Petitions Attorney Steven Brantley at (571) 272-3203.

Charles Steven Brantley
Senior Petitions Attorney
Office of Petitions

UNITED STATES PATENT AND TRADEMARK OFFICE

UNITED STATES DEPARTMENT OF COMMERCE
United States Patent and Trademark Office
Address: COMMISSIONER FOR PATENTS
P.O. Box 1450
Alexandria, Virginia 22313-1450
www.uspto.gov

APPLICATION NO.	FILING DATE	FIRST NAMED INVENTOR	ATTORNEY DOCKET NO.	CONFIRMATION NO.
11/248,480	10/11/2005	Wendy W. Yang		9299

7590 03/23/2011

Wendy W. Yang
3182 Campus Dr. #331
San Mateo, CA 94403

EXAMINER
LE, MICHAEL

ART UNIT	PAPER NUMBER
2163	

MAIL DATE	DELIVERY MODE
03/23/2011	PAPER

ACKNOWLEDGEMENT OF REQUEST

Notice of Allowance/Allowability Mailed

The request to print a color drawing reference as the first paragraph in the portion of the specification containing a brief description of the drawings as required by 37 CFR 1.84 and MPEP § 608.02 has been received by the United States Patent and Trademark Office and will be entered into the specification.

571-272-4200 or 1-888-786-0101
Application Assistance Unit
Office of Data Management

FORM PTOM327-5 (Rev. 02/08)

UNITED STATES PATENT AND TRADEMARK OFFICE

Commissioner for Patents
United States Patent and Trademark Office
P.O. Box 1450
Alexandria, VA 22313-1450
www.uspto.gov

March 22, 2011

Wendy W. Yang
3182 Campus Dr. #331
San Mateo CA 94403

Re Application of	
YANG, WENDY W.	**: DECISION ON PETITION**
Application No: **11/248480**	**: ACCEPTANCE OF COLOR**
Filed: **10/11/2005**	**: DRAWINGS**
Attorney Docket No: N/A	:

This is a decision on the Renewal of Petition to Accept Color Drawings under 37 C.F.R 1.84 (a) (2), received in the United States Patent and Trademark Office (USPTO) October 11, 2005.

The petition is **GRANTED**.
A grantable petition under 37 C.F.R. 1.84(a) (2) must be accompanied by the following.

1. The fee set forth under 37 C.F.R. 1.17(h),
2. Three (3) sets of the color drawings in question, or (1) set if filed via EFS, and
3. The specification containing the following language as the first paragraph in that portion of the specification relating to the brief description of the drawings.

   "The file of this patent contains at least one drawing executed in color. Copies of this patent with color drawing(s) will be provided by the Patent and Trademark Office upon request and payment of the necessary fee."

The petition was accompanied by all of the required fees and drawings. The specification contains the appropriate language. Therefore, the petition is GRANTED.

Telephone inquires relating to this decision may be directed to the undersigned in the Office of Data Management at 571-272-4200.

/Bernadette Queen/
Quality Control Specialist
Office of Data Management
Publications Branch

UNITED STATES PATENT AND TRADEMARK OFFICE

Commissioner for Patents
United States Patent and Trademark Office
P.O. Box 1450
Alexandria, VA 22313-1450
www.uspto.gov

FISH & RICHARDSON P.C.
PO BOX 1022
MINNEAPOLIS MN 55440-1022

MAILED
MAR 13 2012
OFFICE OF PETITIONS

In re Patent No. 8,085,318	:	DECISION ON REQUEST
Ciudad, et al.	:	FOR
Issue Date: December 27, 2011	:	RECONSIDERATION OF
Application No. 11/248,630	:	PATENT TERM ADJUSTMENT
Filed: October 11, 2005	:	and
Atty Docket No. 18962-024001/ P4026US1	:	NOTICE OF INTENT TO ISSUE
	:	CERTIFICATE OF CORRECTION

This is a decision on the petition filed on February 24, 2012, which is being treated as a petition under 37 CFR 1.705(d) requesting that the patent term adjustment indicated on the above-identified patent be corrected to indicate that the term of the above-identified patent is extended or adjusted by nine hundred and ninety-two (992) days.

The petition to correct the patent term adjustment indicated on the above-identified patent to indicate that the term of the above-identified patent is extended or adjusted by **eight hundred and sixty-four (864)days** is **GRANTED to the extent indicated herein.**

The instant petition was filed February 24, 2012. Patentees state, in pertinent part:

> Section 154(b)(1)(B)(i) of Title 35 excludes from the calculation of B Delay "any time consumed by continued examination of the application." In the present matter, Requests for Continued Examination were filed on June 8, 2010, and June 17, 2011. The Director erred in the calculation of the patent term adjustment by subtracting from B Delay a period of time that was not "consumed by continued examination of the application." The PTO mailed a Notice of Allowance on August 22, 2011, thereby closing examination of the application on that date. Thus, no continued examination took place during the 128 day period from

> August 22, 2011 (the mailing date of the Notice of Allowance) until December 27, 2011 (the date the patent was issued). Accordingly, 128 days of B Delay should have been included in addition to the 604 days accorded by the Director for a total B Delay of 732 days.

The Office's calculation of "B delay" is correct. The "B delay" is an adjustment entered if the issuance of the patent was delayed due to the failure of the Office to issue a patent within three years after the date on which the application was filed. However, the adjustment does not include, among other things, any time consumed by continued examination of the application at the request of the applicant under 35 U.S.C. 132(b)[1]. So, with respect to calculating the "B delay" where applicant has filed a request for continued examination, the period of adjustment is the number of days, if any, in the period beginning on the day after the date that is three years after the date on which the application was filed under 35 U.S.C. 111(a) or the national stage commenced under 35 U.S.C. 371(b) or (f) in an international application and ending on the date a patent was issued, but not including the number of days in the period beginning on the date on which a request for continued examination of the application under 35 U.S.C. 132(b) was filed and ending on the date the patent was issued.

Further, counting the period of time excluded from the "B delay" for the filing of a request for continued examination under 35 U.S.C. 132(b), from the date on which the request for continued

---

[1] Pursuant to 35 U.S.C. 132(b), 37 CFR 1.114 provides for continued examination of an application, as follows:

(a) If prosecution in an application is closed, an applicant may request continued examination of the application by filing a submission and the fee set forth in § 1.17(e) prior to the earliest of:

(1) Payment of the issue fee, unless a petition under § 1.313 is granted;

(2) Abandonment of the application; or

(3) The filing of a notice of appeal to the U.S. Court of Appeals for the Federal Circuit under 35 U.S.C. 141, or the commencement of a civil action under 35 U.S.C. 145 or 146, unless the appeal or civil action is terminated.

(b) Prosecution in an application is closed as used in this section means that the application is under appeal, or that the last Office action is a final action (§ 1.113), a notice of allowance (§ 1.311), or an action that otherwise closes prosecution in the application.

examination is filed to the date the patent is issued is proper. Patentee does not dispute that time consumed by continued examination of an application under 35 U.S.C. 132(b) is properly excluded and that the calculation of the excluded period begins on the date of filing of the request for continued examination. At issue is what further processing or examination beyond the date of filing of the request for continued examination is not any time consumed by continued examination of the application under 35 U.S.C. 132(b). The USPTO indicated in September of 2000 in the final rule to implement the patent term adjustment provisions of the AIPA that once a request for continued examination under 35 U.S.C. 132(b) and 37 CFR 1.114 is filed in an application, any further processing or examination of the application, including granting of a patent, is by virtue of the continued examination given to the application under 35 U.S.C. 132(b) and CFR 1.114. See Changes to Implement Patent Term Adjustment under Twenty-Year Patent Term, 65 Fed. Reg. 56366, 56376 (Sept. 18, 2000) (response to comment 8). Thus, the excluded period begins with the filing of the request for continued examination and ends with the issuance of the patent.

Patentee's argument that the period of time after the issuance of a notice of allowance on a request for continued examination is not "any time consumed by continued examination requested by the applicant under section 132(b)" within the meaning of 35 U.S.C. 154(b)(1)(B)(i) is not availing. This limitation is not supported by the statutory language. Garcia v. United States, 469 U.S. 70, 75 (1984) ("only the most extraordinary showing of contrary intentions from [legislative history] would justify a limitation on the 'plain meaning' of the statutory language"). BP Am. Prod. Co. v. Burton, 549 U.S. 84, 91 (2006) ("Unless otherwise defined, statutory terms are generally interpreted in accordance with their ordinary meaning"). The statute provides for a guarantee of no more than 3-year application pendency, by providing for an adjustment in the patent term:

First, "Subject to the limitations of paragraph (2)," means that the limitations of paragraph 2 apply to this paragraph's adjustment of patent term. That is, the day-to-day extension of patent term for pendency beyond the 3 year period is restricted as follows: 1) "B delay" cannot accrue for days of "A delay" that overlap, 2) the patent term cannot be extended beyond disclaimed term, and 3) the period of adjustment, including accrued "B delay," will be reduced for applicant delay.

Second, "if the issue of an original patent is delayed due to the failure of the United States Patent and Trademark Office to issue a patent within 3 years after the actual filing date of the application in the United States," meaning that the condition must first occur that the issuance of an original patent (35 U.S.C. 153), not merely the issuance of a notice of allowance, is delayed due to the Office's failure to issue a patent (sign and record a patent grant in the name of the United States), not merely mail a notice of allowance, within 3 years after the actual filing date of the application in the United States. This provision gives the Office a three-year period to issue a patent (sign and record a patent grant in the name of the United States) after the application filing date before an adjustment will accrue for "B delay."

Third, "not including- (i) any time consumed by continued examination of the application requested by the applicant under section 132(b); (ii) any time consumed by a proceeding under section 135(a), any time consumed by the imposition of an order under section 181, or any time consumed by appellate review by the Board of Patent Appeals and Interferences or by a Federal court; or (iii) any delay in the processing of the application by the United States Patent and Trademark Office requested by the applicant except as permitted by paragraph (3)(C), meaning that the three-year period does not include "any time consumed by" or "any delay in processing," as specified in clauses (i)-(iii). This language correlates to 35 U.S.C. 154(b)(1)(A) which likewise provides the basis for determining the period given the Office to take the specified actions before an adjustment will accrue for "A delay" (e.g., extended for 1 day after the day after the period specified in clauses (i)-(iv)).

Furthermore, these clauses are interpreted using their ordinary meanings. Nonetheless, the context of the legislation should be considered. As stated in Wyeth v. Dudas, 580 F. Supp.2d 138(D.D.C., September 30, 2008), because the clock for calculating the 20-year patent term begins to run on the filing date, and not on the day the patent is actually granted, some of the effective term of a patent is consumed by the time it takes to prosecute the application. To mitigate this effect, the statute, *inter alia*, grants adjustments of patent term whenever the patent prosecution takes more than three years, regardless of the reason. The time consumed by prosecution of the application includes every day the application is pending before the Office from the actual filing date of the application in the United States until the date of issuance of the patent. The

time it takes to prosecute the application ends not with the mailing of the notice of allowance, but with the issuance of the patent.

Thus, not including "any time consumed by" means not including any days used to prosecute the application as specified in clauses (i)-(ii)[2]. Clause (i) specifies "any time consumed by continued examination of the application requested by the applicant under section 132(b)." Clause (ii) specifies "any time consumed by a proceeding under section 135(a), any time consumed by the imposition of an order under section 181, or any time consumed by appellate review by the Board of Patent Appeals and Interferences or by a Federal court." "Time" in the context of this legislation throughout refers to days. "Consumed by" means used by or used in the course of. *Websters Collegiate Dictionary*, (11th ed.). The "any" signifies that the days consumed by are "any" of the days in the pendency of the application, and not just days that occur after the application has been pending for 3 years. As such, "any time consumed by" refers to any days used in the course of 1) continued examination of the application under section 132(b)(the filing of a request for continued examination), 2) interference proceedings, 3) secrecy orders, and 4) appellate review. Thus, that 3-year period given to the Office to issue a patent before an adjustment will accrue for "B delay" does not include any days used in the course of or any time consumed by clauses (i)-(ii), including any time consumed by the filing of a request for continued examination.

Fourth, "the term of the patent shall be extended 1 day for each day after the end of that 3-year period until the patent is issued" meaning that the consequence of this failure is that after "the end of that 3-year period" an additional 1 day of patent term will accrue for each day that the application is pending until the day the patent is issued.

---

[2] Clause (iii) provides for not including (iii) any delay in the processing of the application by the United States Patent and Trademark Office requested by the applicant except as permitted by paragraph (3)(C), the term of the patent shall be extended 1 day for each day after the end of that 3-year period until the patent is issued. It is noted that paragraph (3)(C) allows with an adequate showing by applicant for reinstatement of no more than 3 months of the patent term reduced for applicant delay in taking in excess of three months to respond.

The "time consumed by" or used in the course of the continued examination of the application requested by the applicant under section 132(b) does not end until issuance of the patent. 35 U.S.C. 132(b) was enacted under the same title, the "American Inventors Protection Act of 1999," as 35 U.S.C. 154(b). Section 4403 of the AIPA amended 35 U.S.C. § 132 to provide, at the request of the applicant, for continued examination of an application for a fee (request for continued examination or RCE practice), without requiring the applicant to file a continuing application under 37 CFR 1.53(b) or a continued prosecution application (CPA) under 37 CFR 1.53(d). Thus, clause (i) is different from clause (ii) in that clause (i) refers to an examination process whereas clause (ii) refers to time consumed by proceedings (interferences, secrecy orders and appeals) in an application.

By nature, the time used in the course of the examination process continues to issuance of the patent. The examination process involves examining the application to ascertain whether it appears that the applicant is entitled to a patent under the law. See 35 U.S.C. 131 ("[t]he Director shall cause an examination to be made of the application and the alleged new invention; and if on such examination it appears that the applicant is entitled to a patent under the law, the Director shall issue a patent therefor"). If on examination it appears that the applicant is entitled to a patent, the USPTO issues a notice of allowance. See 35 U.S.C. 151 ("[i]f it appears that applicant is entitled to a patent under the law, a written notice of allowance of the application shall be given or mailed to the applicant"). If on examination it appears that the applicant is not entitled to a patent, the USPTO issues a notice (an Office action) stating the applicable rejection, objection, or other requirement, with the reasons therefor. See 35 U.S.C. 132 ("[w]henever, on examination, any claim for a patent is rejected, or any objection or requirement made, the Director shall notify the applicant thereof, stating the reasons for such rejection, or objection or requirement, together with such information and references as may be useful in judging of the propriety of continuing the prosecution of his application"). Neither the issuance of a notice of allowance nor the insurance of an Office action terminates the examination process. If after the issuance of an Office action under 35 U.S.C. 132 it subsequently appears that the applicant is entitled to a patent (e.g., in response to an argument or amendment by the applicant), the USPTO will issue a notice of allowance. Conversely, if after the issuance of a notice of allowance under

35 U.S.C. 151 it subsequently appears that the applicant is not entitled to a patent (e.g., in response to information provided by the applicant or uncovered by the USPTO), the USPTO will withdraw the application from issuance and issue an Office action under 35 U.S.C. 132 stating the applicable rejection, objection, or other requirement, with the reasons therefor.

As held in Blacklight Power, the USPTO's responsibility to issue a patent containing only patentable claims does not end with the issuance of a notice of allowance under 35 U.S.C. 151. See BlackLight Power, Inc. v. Rogan, 295 F.3d 1269, 1273 (Fed. Cir. 2002). Rather, if there is any substantial, reasonable ground within the knowledge or cognizance of the Director as to why an application should not issue, it is the USPTO's duty to refuse to issue the patent even if a notice of allowance has previously been issued for the application. See In re Drawbaugh, 9 App. D.C. 219, 240 (D.C. Cir 1896).

Moreover, the applicant continues to be engaged in the examination process after the mailing of the notice of allowance. 37 CFR 1.56 makes clear that the applicant has a duty to disclose information material to patentability as long as the application is pending before the USPTO (i.e., until a patent is granted or the application is abandoned). See 37 CFR 1.56(a) ("[t]he duty to disclose information exists with respect to each pending claim until the claim is cancelled or withdrawn from consideration, or the application becomes abandoned"). 37 CFR 1.97 and 1.98 provide for the consideration of information submitted by the applicant after a notice of allowance has been mailed. See 37 CFR 1.97(d). In addition, 37 CFR 1.312 provides for the amendment of an application after a notice of allowance has been mailed. In fact, the request for examination procedures[3] permit the filing of a request for continued examination under 37 CFR 1.114 even after the issuance of a notice of allowance under 35 U.S.C. 151. See 37 CFR 1.114(a)(1).

As the examination process does not terminate with the mailing of the notice of allowance, the time consumed by continued examination requested by the applicant under section 132(b) does not terminate with the mailing of the notice of allowance. All the time the application is pending from the date of filing of the request for continued examination to the mailing of the notice of allowance through issuance of the

[3] Thus, on occasion, even where a request for continued examination has already been filed and a notice of allowance issued pursuant to that request, applicant may file a further request for continued examination.

patent is a consequence of the filing of the request for continued examination. Further action by the Office is pursuant to that request. Applicant has gotten further prosecution of the application without having to file a continuing application under 37 CFR 1.53(b).

All of the continued examination pursuant to the filing of the request by the applicant is properly excluded from the delay attributed to the Office. 35 U.S.C. 154(b)(1)(B)'s guarantee of a total application pendency of no more than three years provides for adjustment of the patent term for delay due to the Office's failure to issue the patent within three years, but does not include "any time consumed by continued examination requested by the applicant under 35 U.S.C. 132(b)." It is not necessary to mitigate the effect on the 20-year term to the extent that applicant has requested that the Office continue to examine the application via a request for continued examination, in lieu of, the filing of a continuing application under 37 CFR 1.53(b).

In this instance, a request for continued examination was filed on June 8, 2010, and the patent issued by virtue of that request on July 12, 2011. Pursuant to 35 U.S.C. 154(b)(1)(B)(i), the period beginning on June 8, 2010, and ending on December 27, 2011, is not included in calculating Office delay.

Patentees also note that a reduction to the patent term adjustment under 37 CFR 1.704(c)(8) is warranted for the filing of a supplemental reply on June 22, 2010. A review of the application file history reveals that a reduction to the patent term adjustment of 14 days is warranted for the filing of a supplemental paper on June 22, 2010, with said period beginning June 9, 2010, and ending June 2,2 2010. A period of reduction to the patent term adjustment of 14 days is being entered, accordingly.

Accordingly, the revised patent term adjustment is 864 days (666 days "A" delay + 604 days "B" delay - 0 days of overlap - 406 days of applicant delay.)

The petition fee of $200.00 required by 37 CFR 1.18 was received on February 24, 2012.

Nothing in this decision shall be construed as a waiver of the requirement of 35 U.S.C. 154(b)(4) that any civil action by an

applicant dissatisfied with a determination made by the Director under 35 U.S.C. 154(b)(3) be filed in the United States District Court for the District of Columbia within 180 days after the grant of the patent.

The Office will *sua sponte* issue a certificate of correction. Pursuant to 37 CFR 1.322, the Office will not issue a certificate of correction without first providing assignee or patentee an opportunity to be heard. Accordingly, patentees are given **one (1) month or thirty (30) days**, whichever is longer, from the mail date of this decision to respond. No extensions of time will be granted under § 1.136.

The application is being forwarded to the Certificates of Correction Branch for issuance of a certificate of correction. The Office will issue a certificate of correction indicating that the term of the above-identified patent is extended or adjusted by **eight hundred and sixty-four (864)** days.

Telephone inquiries specific to this matter should be directed to the undersigned at (571) 272-3222.

/Kenya A. McLaughlin/

Kenya A. McLaughlin
Petitions Attorney
Office of Petitions

Enclosure: Copy of DRAFT Certificate of Correction

DRAFT COPY

UNITED STATES PATENT AND TRADEMARK OFFICE

CERTIFICATE OF CORRECTION

PATENT : 8,085,318 B2

DATED : De. 27, 2011

INVENTOR(S) : Ciudad, et al.

It is certified that error appears in the above-identified patent and that said Letters Patent is hereby corrected as shown below:

On the cover page,

[*] Notice: Subject to any disclaimer, the term of this patent is extended or adjusted under 35 USC 154(b) by (878) days

Delete the phrase "by 878 days" and insert – by 864 days--

UNITED STATES PATENT AND TRADEMARK OFFICE

Commissioner for Patents
United States Patent and Trademark Office
P.O. Box 1450
Alexandria, VA 22313-1450
www.uspto.gov

Paper No.

FOLEY & LARDNER LLP
150 EAST GILMAN STREET
P.O. BOX 1497
MADISON WI 53701-1497

MAILED
OCT 11 2011
OFFICE OF PETITIONS

In re Application of	:	
Ozguz et al.	:	
Application No. 11/248,659	:	ON APPLICATION FOR
Filed: October 11, 2005	:	PATENT TERM ADJUSTMENT
Atty Docket No. 088245-9262	:	

This is in response to the REQUEST FOR RECONSIDERATION OF PATENT TERM ADJUSTMENT FOR PATENT APPLICATION UNDER 37 C.F.R. §1.705(b) filed October 3, 2011. Applicant submits that the correct patent term adjustment to be indicated on the patent is one thousand thirty-two (1032) days, not seven hundred forty-five (745) days as calculated by the Office as of the mailing of the initial determination of patent term adjustment. Applicant requests this correction solely on the basis that the Office will take in excess of three years to issue this patent.

As the instant application for patent term adjustment requests reconsideration of the patent term adjustment as it relates to the Office's failure to issue the patent within 3 years of the filing date, the application for patent term adjustment under 37 CFR 1.705(b) is **DISMISSED as PREMATURE**.

Knowledge of the actual date the patent issues is required to calculate the amount, if any, of additional patent term patentee is entitled to for Office failure to issue the patent within 3 years. See § 1.702(b). (This is true even where a request for continued examination (RCE) was filed). The computer will not undertake the § 1.702(b) calculation until the actual date of issuance of the patent has been determined. Likewise, the computer will not calculate any further Office delay under

§ 1.702(a)(4) or applicant delay under § 1.704(c)(10) until the actual date of issuance of the patent has been determined. As such, the Office cannot make a determination on the correctness of the patent term adjustment until the patent has issued.

Requesting reconsideration of the patent term adjustment to be indicated on the patent under 37 CFR 1.705(b) based on the initial determination of patent term adjustment and a projected issuance date of the patent (or even the filing date of the request for continued examination) is premature. Accordingly, it is appropriate to dismiss as premature such a request.

Rather than file an application for patent term adjustment under 37 CFR 1.705(b) contesting the 37 CFR 1.702(b) calculation at the time of the mailing of the notice of allowance, applicant is advised that they may wait until the time of the issuance of the patent and file a request for reconsideration of the patent term adjustment pursuant to 37 CFR 1.705(d). As the USPTO does not calculate the amount of time earned pursuant to 37 CFR 1.702(b) until the time of the issuance of the patent, the Office will consider any request for reconsideration of the patent term adjustment due to an error in the calculation of 37 CFR 1.702(b) to be timely if the request for reconsideration is filed within two months of the issuance of the patent. However, as to all other bases for contesting the initial determination of patent term adjustment received with the notice of allowance, applicant must timely file an application for patent term adjustment prior to the payment of the issue fee[1].

The Office acknowledges submission of the $200.00 fee set forth in 37 CFR 1.18(e) for consideration of the application for patent term adjustment under 37 CFR 1.705(b).

---

[1] For example, if applicant disputes both the calculation of patent term adjustment under 37 CFR 1.702(a)(1) for Office failure to mail a first Office action or notice of allowance not later than fourteen months after the date on which the application was filed and under 37 CFR 1.702(b) for Office failure to issue a patent within three years of the actual filing date of the application, then applicant must still timely file an application for patent term adjustment prior to the payment of the issue fee to contest the calculation of Office delay in issuing a first Office action or notice of allowance. See 37 CFR 1.705(b) and 35 U.S.C. 154(b) (3)(B). A dispute as to the calculation of the §1.702(a)(1) period raised on request for reconsideration of patent term adjustment under 37 CFR 1.705(d) will be dismissed as untimely filed.

Any request for reconsideration of the patent term adjustment indicated on the patent must be timely filed within 2 months after issuance pursuant to 37 CFR 1.705(d) and must include payment of the required fee under 37 CFR 1.18(e).

Telephone inquiries specific to this decision should be directed to the undersigned at (571) 272-3219.

Nancy Johnson
Senior Petitions Attorney
Office of Petitions

DH

1-12-2012

PTO/SB/44 (09-07)
Approved for use through 08/31/2013. OMB 0651-0033
U.S. Patent and Trademark Office; U.S. DEPARTMENT OF COMMERCE
Under the Paperwork Reduction Act of 1995, no persons are required to respond to a collection of information unless it displays a valid OMB control number.
(Also Form PTO-1050)

UNITED STATES PATENT AND TRADEMARK OFFICE
CERTIFICATE OF CORRECTION

PATENT NO. : 7,929,550 B2

APPLICATION NO.: 11/248,764

ISSUE DATE : April 19, 2011

INVENTOR(S) : Daisuke Namihira et al.

It is certified that an error appears or errors appear in the above-identified patent and that said Letters Patent is hereby corrected as shown below:

The following is added to the front page of the patent in the left column:

--(63) Related U.S. Application Data
Continuation of application No. PCT/JP2003/008711,
filed on Jul. 9, 2003--

MAILING ADDRESS OF SENDER (Please do not use customer number below):

Katten Muchin Rosenman LLP
575 Madison Avenue
New York, NY 10022-2585

This collection of information is required by 37 CFR 1.322, 1.323, and 1.324. The information is required to obtain or retain a benefit by the public which is to file (and by the USPTO to process) an application. Confidentiality is governed by 35 U.S.C. 122 and 37 CFR 1.14. This collection is estimated to take 1.0 hour to complete, including gathering, preparing, and submitting the completed application form to the USPTO. Time will vary depending upon the individual case. Any comments on the amount of time you require to complete this form and/or suggestions for reducing this burden, should be sent to the Chief Information Officer, U.S. Patent and Trademark Office, U.S. Department of Commerce, P.O. Box 1450, Alexandria, VA 22313-1450. DO NOT SEND FEES OR COMPLETED FORMS TO THIS ADDRESS. **SEND TO: Attention Certificate of Corrections Branch, Commissioner for Patents, P.O. Box 1450, Alexandria, VA 22313-1450.**

If you need assistance in completing the form, call 1-800-PTO-9199 and select option 2.

DH
1-12-2012

US007929550B2

(12) **United States Patent**
Namihira et al.

(10) **Patent No.: US 7,929,550 B2**
(45) **Date of Patent: Apr. 19, 2011**

(54) **METHOD FOR OPTIMALLY ROUTING SPECIFIC SERVICE IN NETWORK, AND SERVER AND ROUTING NODE USED IN THE NETWORK**

(75) Inventors: **Daisuke Namihira**, Kawasaki (JP); **Yasunori Terasaki**, Kawasaki (JP)

(73) Assignee: **Fujitsu Limited**, Kawasaki (JP)

(*) Notice: Subject to any disclaimer, the term of this patent is extended or adjusted under 35 U.S.C. 154(b) by 1561 days.

(21) Appl. No.: **11/248,764**

(22) Filed: **Oct. 12, 2005**

(65) **Prior Publication Data**

US 2006/0029076 A1 Feb. 9, 2006

(51) **Int. Cl.**
H04L 12/28 (2006.01)

(52) **U.S. Cl.** **370/401**; 370/392; 370/400; 709/201

(58) **Field of Classification Search** ..... None
See application file for complete search history.

(56) **References Cited**

U.S. PATENT DOCUMENTS

5,210,748	A	5/1993	Onishi et al.	
5,642,352	A	6/1997	Ishida et al.	
5,774,660	A *	6/1998	Brendel et al.	709/201
6,304,913	B1	10/2001	Rune	
6,667,971	B1 *	12/2003	Modarressi et al.	370/352
6,748,447	B1 *	6/2004	Basani et al.	709/244
7,185,112	B1 *	2/2007	Kuranari et al.	709/249
7,254,602	B1 *	8/2007	Boivie	709/201
7,457,279	B1 *	11/2008	Scott et al.	370/352
2001/0036164	A1 *	11/2001	Kakemizu et al.	370/331
2002/0091786	A1	7/2002	Yamaguchi et al.	
2003/0210694	A1 *	11/2003	Jayaraman et al.	370/392
2004/0153499	A1 *	8/2004	Heddaya et al.	709/202
2008/0215718	A1 *	9/2008	Stolorz et al.	709/223

FOREIGN PATENT DOCUMENTS

EP	1 063 831	12/2000
JP	3-235444	10/1991
JP	6-259308	9/1994
JP	8-79309	3/1996
JP	10-334061	12/1998
JP	11-55321	2/1999
JP	2001-7844	1/2001
JP	2002-140202	5/2002
JP	2002-530014	9/2002
JP	2002-374290	12/2002
JP	2003-374293	12/2002
JP	2003-22226	1/2003
JP	2003-115868	4/2003
JP	2003-152780	5/2003
WO	WO 00/28713	5/2000

OTHER PUBLICATIONS

International Search Report dated Oct. 28, 2003.
Notice of Ground of Rejection dated Apr. 1, 2008, from the corresponding Japanese Application.
Notification of Reason(s) for Refusal mailed Feb. 3, 2009, from the corresponding Japanese Application.

* cited by examiner

Primary Examiner — Duc C Ho
(74) *Attorney, Agent, or Firm* — Katten Muchin Rosenman LLP

(57) **ABSTRACT**

Information (service information) about service contents provided by servers is registered or updated by each of routing nodes by exchanging said information through use of a routing protocol used in controlling a path among the routing nodes. The routing node selectively changes address information about a service access request on the basis of the service information owned by the routing node, to thus route the service access request to an optimal destination. Thereby, concentration of load to a specific service can be efficiently dispersed.

22 Claims, 24 Drawing Sheets

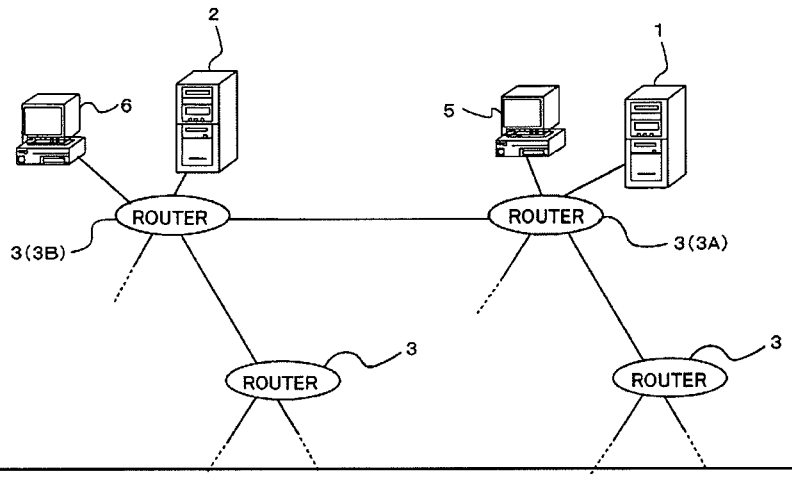

Related U.S. Application Data

(63) Continuation of application No.PCT/JP2003/008711, filed on Jul. 09, 2003

SPE RESPONSE FOR CERTIFICATE OF CORRECTION

Paper No.:20120112

DATE : January 10, 2012

TO SPE OF : ART UNIT 2465

SUBJECT : Request for Certificate of Correction on Patent No.: 7,929,550

A response is requested with respect to the accompanying request for a certificate of correction.

Please complete this form and return with file, within **7** days to:
Certificates of Correction Branch - ST (South Tower) 9A22
Palm location **7590** - Tel. No. (703) 305-8309

With respect to the change(s) requested, correcting Office and/or Applicant's errors, should the patent read as shown in the certificate of correction? No new matter should be introduced, nor should the scope or meaning of the claims be changed.

Thank You For Your Assistance **Certificates of Correction Branch**

The request for issuing the above-identified correction(s) is hereby:

Note your decision on the appropriated box.

☒ **Approved** All changes apply.

☐ **Approved in Part** Specify below which changes **do not** apply.

☐ **Denied** State the reasons for denial below.

Comments:

/MARSHA D. BANKS HAROLD/
Supervisory Patent Examiner, Art Unit 2465

UNITED STATES PATENT AND TRADEMARK OFFICE

Commissioner for Patents
United States Patent and Trademark Office
P.O. Box 1450
Alexandria, VA 22313-1450
www.uspto.gov

MCANDREWS HELD & MALLOY, LTD
500 WEST MADISON STREET
SUITE 3400
CHICAGO IL 60661

MAILED

MAR 04 2011

OFFICE OF PETITIONS

In re Application of	:	
Mak et al.	:	
Application No. 11/248807	:	ON APPLICATION FOR
Filing or 371(c) Date: 10/12/2005	:	PATENT TERM ADJUSTMENT
Atty Docket No.:	:	
16855US01	:	

This is in response to the APPLICATION FOR RECONSIDERATION OF THE DETERMINATION OF PATENT TERM ADJUSTMENT UNDER 35 U.S.C. 154(b) ACCOMPANYING NOTICE OF ALLOWANCE, filed December 22, 2010. Applicant proposes that the correct Patent Term Adjustment is 1424 days, not zero (0) days as calculated by the Office as of the mailing of the initial determination of patent term adjustment. Applicant requests this correction solely on the basis that the Office will take in excess of three years to issue this patent. The application for patent term adjustment is properly treated under 37 C.F.R. § 1.705(b).

As the instant application for patent term adjustment requests reconsideration of the patent term adjustment as it relates to the Office's failure to issue the patent within 3 years of the filing date, the application for patent term adjustment under 37 CFR 1.705(b) is **DISMISSED as PREMATURE**.

Knowledge of the actual date the patent issues is required to calculate the amount, if any, of additional patent term patentee is entitled to for Office failure to issue the patent within 3 years. See § 1.702(b). (This is true even where a request for continued examination (RCE) was filed). The computer will not undertake the § 1.702(b) calculation until the actual date of issuance of the patent has been determined. Likewise, the computer will not calculate any further Office delay under § 1.702(a)(4) or applicant delay under § 1.704(c)(10) until the actual date of issuance of the patent has been determined. As such, the Office can not make a determination on the correctness of the patent term adjustment until the patent has issued.

Requesting reconsideration of the patent term adjustment to be indicated on the patent under 37 CFR 1.705(b) based on the initial determination of patent term adjustment and a projected issuance date of the patent (or even the filing date of the request for continued examination) is premature. Accordingly, it is appropriate to dismiss as premature such a request.

Rather than file an application for patent term adjustment under 37 CFR 1.705(b) contesting the 37 CFR 1.702(b) calculation at the time of the mailing of the notice of allowance, applicant is advised that they may wait until the time of the issuance of the patent and file a request for reconsideration of the patent term adjustment pursuant to 37 CFR 1.705(d). As the USPTO does not calculate the amount of time earned pursuant to 37 CFR 1.702(b) until the time of the issuance of the patent, the Office will consider any request for reconsideration of the patent term adjustment due to an error in the calculation of 37 CFR 1.702(b) to be timely if the request for reconsideration is filed within two months of the issuance of the patent. However, as to all other bases for contesting the initial determination of patent term adjustment received with the notice of allowance, applicant must timely file an application for patent term adjustment prior to the payment of the issue fee[1].

The Office acknowledges submission of the $200.00 fee set forth in 37 CFR 1.18(e) for consideration of the application for patent term adjustment under 37 CFR 1.705(b).

Any request for reconsideration of the patent term adjustment indicated on the patent must be timely filed within 2 months after issuance pursuant to 37 CFR 1.705(d) and ***must*** include payment of the required fee under 37 CFR 1.18(e).

The Office of Data Management has been advised of this decision. This application is being referred to the Office of Data Management for issuance of the patent.

Telephone inquiries specific to this decision should be directed to the undersigned at (571) 272-3232.

/DLW/

Derek L. Woods
Attorney
Office of Petitions

---

[1] For example, if applicant disputes both the calculation of patent term adjustment under 37 CFR 1.702(a)(1) for Office failure to mail a first Office action or notice of allowance not later than fourteen months after the date on which the application was filed and under 37 CFR 1.702(b) for Office failure to issue a patent within three years of the actual filing date of the application, then applicant must still timely file an application for patent term adjustment prior to the payment of the issue fee to contest the calculation of Office delay in issuing a first Office action or notice of allowance. See 37 CFR 1.705(b) and 35 U.S.C. 154(b)(3)(B). A dispute as to the calculation of the §1.702(a)(1) period raised on request for reconsideration of patent term adjustment under 37 CFR 1.705(d) will be dismissed as untimely filed.

UNITED STATES PATENT AND TRADEMARK OFFICE

Commissioner for Patents
United States Patent and Trademark Office
P.O. Box 1450
Alexandria, VA 22313-1450
www.uspto.gov

Patent No. : **7823592**
Ser. No. : **11/248846**
Inventor(s) : **BETTUCHI, MICHAEL J.**
Issued : **11/02/2010**
Title : **ANNULAR ADHESIVE STRUCTURE**
Docket No. : **H-US-00177 (203-4202)**

Re: Request for Certificate of Correction

Consideration has been given your request for the issuance of a certificate of correction for the above-identified patent under the provisions of Rule(s) 1.322 and/or 1.323.

In regards to the alleged error(s) in the Claims, see the attached SPE Response form.

In view of the foregoing, your request, in this matter, is hereby denied.

Omega Lewis
For Mary Diggs
Decisions & Certificates
Of Correction Branch
(703)756-1575 or (703) 756-1814

CARTER, DELUCA, FARRELL & SCHMIDT, LLP
445 BROAD HOLLOW ROAD, SUITE 420
MELVILLE, NY 11747

OL

SPE RESPONSE FOR CERTIFICATE OF CORRECTION

Paper No.:20110103

DATE : December 07, 2010

TO SPE OF : ART UNIT 3721

SUBJECT : Request for Certificate of Correction on Patent No.: 7823592

A response is requested with respect to the accompanying request for a certificate of correction.

Please complete this form and return with file, within **7** days to:
Certificates of Correction Branch - ST (South Tower) 9A22
Palm location **7590** - Tel. No. (703) 305-8309

With respect to the change(s) requested, correcting Office and/or Applicant's errors, should the patent read as shown in the certificate of correction? No new matter should be introduced, nor should the scope or meaning of the claims be changed.

Thank You For Your Assistance **Certificates of Correction Branch**

The request for issuing the above-identified correction(s) is hereby:

Note your decision on the appropriated box.

☐ **Approved** All changes apply.

☐ **Approved in Part** Specify below which changes **do not** apply.

☒ **Denied** State the reasons for denial below.

Comments:

The proposed correction is not deemed a mistake incurred through the fault of the office. The proposed addition of the phrase ",the anvil and the body portion juxtaposed" was never in the claims for consideration.

/RINALDI I RADA/
Supervisory Patent Examiner.Art Unit 3721

UNITED STATES PATENT AND TRADEMARK OFFICE

Commissioner for Patents
United States Patent and Trademark Office
P.O. Box 1450
Alexandria, VA 22313-1450
www.uspto.gov

KIRTON AND MCCONKIE
60 EAST SOUTH TEMPLE
SUITE 1800
SALT LAKE CITY UT 84111

MAILED

APR 10 2012

OFFICE OF PETITIONS

In re Application of	:	
Mark Johnson	:	DECISION ON PETITION
Application No. 11/248,900	:	
Filed: October 11, 2005	:	
Atty Docket No. 19544.15	:	

This is a decision on the PETITION TO REVIVE FOR UNINTENTIONAL ABANDONMENT filed March 14, 2012.

The petition is **GRANTED**.

The above-identified application became abandoned for failure to file a reply to the non-final Office action mailed May 12, 2011. This Office action set a shortened statutory period for reply of three (3) months, with extensions of time obtainable under § 1.136(a). No reply filed and no extension of time obtained, the application became abandoned effective August 13, 2011. A courtesy Notice of Abandonment was mailed on December 8, 2011.

The petition includes the required reply, the statement of unintentional delay and payment of the petition fee. No terminal disclaimer is required.

Given the revocations of power of attorney filed in this application in 2012, it is not apparent whether the person signing the statement of unintentional delay was in a position to have firsthand or direct knowledge of the facts and circumstances of the delay at issue. Nevertheless, such statement is being treated as having been made as the result of a reasonable inquiry into the facts and circumstances of such delay. See 37 CFR 10.18(b) and Changes to Patent Practice and Procedure; Final Rule Notice, 62 Fed. Reg. 53131, 53178 (October 10, 1997), 1203 Off. Gaz. Pat. Office 63, 103 (October 21, 1997). In the event that such an inquiry has not been made,

petitioner must make such an inquiry. If such inquiry results in the discovery that it is not correct that the entire delay in filing the required reply from the due date for the reply until the filing of a grantable petition pursuant to 37 CFR 1.137(b) was unintentional, petitioner must notify the Office.

Technology Center AU 3753 has been advised of this decision. The application is, thereby, forwarded to the examiner for consideration of the reply submitted on petition filed March 14, 2012.

Telephone inquiries specific to this matter should be directed to the undersigned at (571) 272-3219.

Nancy Johnson
Senior Petitions Attorney
Office of Petitions

UNITED STATES PATENT AND TRADEMARK OFFICE

Commissioner for Patents
United States Patent and Trademark Office
P.O. Box 1450
Alexandria, VA 22313-1450
www.uspto.gov

LAWRENCE BERKELEY NATIONAL LABORATORY
TECHNOLOGY TRANSFER & INTELLECTUAL PROPERY MANAGEM
ONE CYOLOTRON ROAD MS 56A-120
BERKELEY CA 94720

MAILED
FEB 09 2011
OFFICE OF PETITIONS

In re
Application No. 11/248,934
Filed: October 11, 2005
Patent No. 7,148,778
Attorney Docket No. JIB-1714A

DECISION

This is a decision on the fee deficiency submission under 37 CFR 1.28(c), filed September 10, 2010.

The fee deficiency submission under 37 CFR 1.28 of $490 for the four year maintenance fee is hereby accepted.

The change of status to large entity has been entered.

Telephone inquiries concerning this matter may be directed to the undersigned at (571) 272-3207.

Cliff Congo
Petitions Attorney
Office of Petitions

UNITED STATES PATENT AND TRADEMARK OFFICE

Commissioner for Patents
United States Patent and Trademark Office
P.O. Box 1450
Alexandria, VA 22313-1450
www.uspto.gov

MAILED
AUG 05 2010
OFFICE OF PETITIONS

THE WATSON INTELLECTUAL PROPERTY GROUP, PLC
3133 HIGHLAND DRIVE
SUITE 200
HUDSONVILLE MI 49426

In re Application of	:	
CORTES, DAGOBERTO S.	:	DECISION ON PETITION
Application No. 11/249,024	:	
Filed: 10/12/2005	:	
Attorney Docket No. MEC-041121	:	

This is a decision on the petition under 37 CFR 1.137(b), filed March 10, 2010, to revive the above-identified application.

The petition is **GRANTED**.

This application became abandoned for failure to pay the issue fee as required by the Notice of Allowance and Fee(s) Due mailed on October 16, 2009, which set a three (3) month statutory period for reply. Accordingly, the application became abandoned on January 17, 2010. A Notice of Abandonment was mailed on March 2, 2010.

The petition satisfies the requirements of 37 CFR 1.137(b) in that petitioner has supplied (1) the reply in the form of payment of the issue fee, (2) the petition fee, and (3) a proper statement of unintentional delay.

This matter is being forwarded to the Office of Data Management for processing into a patent.

Telephone inquiries specifically concerning this decision should be directed to the undersigned at (571) 272-3211.

C. T. Donnell

Christina Tartera Donnell
Senior Petitions Attorney
Office of Petitions

UNITED STATES PATENT AND TRADEMARK OFFICE

Commissioner for Patents
United States Patent and Trademark Office
P.O. Box 1450
Alexandria, VA 22313-1450
www.uspto.gov

MOORE & VAN ALLEN, PLLC
PO BOX 13706
RESEARCH TRIANGLE PARK, NC 27709

MAILED

AUG 19 2011

OFFICE OF PETITIONS

In re Application of	:	
Robert Tyler Leonard, et al.	:	
Application No. 11/249,107	:	DECISION GRANTING PETITION
Filed: October 12, 2005	:	UNDER 37 CFR 1.313(c)(2)
Attorney No. 034643-000114	:	

This is a decision on the renewed petition under 37 CFR 1.313(c)(2), filed August 18, 2011, to withdraw the above-identified application from issue after payment of the issue fee.

The petition is **GRANTED**.

The above-identified application is withdrawn from issue for consideration of a submission under 37 CFR 1.114 (request for continued examination). *See* 37 CFR 1.313(c)(2).

Petitioner is advised that the issue fee paid on July 14, 2011 cannot be refunded. If, however, this application is again allowed, petitioner may request that it be applied towards the issue fee required by the new Notice of Allowance.[1]

Telephone inquiries regarding this decision should be directed to undersigned at (571) 272-1642. All other inquiries concerning the examination or status of this application should be directed to the Technology Center.

This application is being referred to Technology Center AU 1714 for processing of the request for continued examination under 37 CFR 1.114 and for consideration of the concurrently filed amendment and information disclosure statement.

/AMW/
April M. Wise
Petitions Examiner
Office of Petitions

---

[1] *The request to apply the issue fee to the new Notice may be satisfied by completing and returning the new Part B – Fee(s) Transmittal Form (along with any balance due at the time of submission). Petitioner is advised that the Issue Fee Transmittal Form must be completed and timely submitted to avoid abandonment of the application.*

UNITED STATES PATENT AND TRADEMARK OFFICE

Commissioner for Patents
United States Patent and Trademark Office
P.O. Box 1450
Alexandria, VA 22313-1450
www.uspto.gov

MAILED

SEP 13 2010

OFFICE OF PETITIONS

NIXON & VANDERHYE, PC
901 NORTH GLEBE ROAD, 11TH FLOOR
ARLINGTON VA 22203

In re Patent No. 7,128,041	:	
Issue Date: October 31, 2006	:	
Application No. 11/249,277	:	NOTICE
Filed: October 14, 2005	:	
Attorney Docket No. 249-399	:	

This is a notice regarding your request, filed July 30, 2010, for acceptance of a fee deficiency submission under 37 CFR 1.28.

On September 1, 1998, the Court of Appeals for the Federal Circuit held that 37 CFR 1.28(c) is the sole provision governing the time for correction of the erroneous payment of the issue fee as a small entity. **See DH Technology v. Synergystex International, Inc. 154 F.3d 1333, 47 USPQ2d 1865 (Fed. Cir. Sept. 1, 1998).**

The Office no longer investigates or rejects original or reissue applications under 37 CFR 1.56. **1098 Off. Gaz. Pat. Office 502 (January 3, 1989)**. Therefore, nothing in this Notice is intended to imply that an investigation was done.

Your fee deficiency submission under 37 CFR 1.28 is hereby **ACCEPTED**.

This patent is no longer entitled to small entity status. Accordingly, all future fees paid in this patent must be paid at the large entity rate.

Liana Walsh
Petitions Examiner
Office of Petitions

UNITED STATES PATENT AND TRADEMARK OFFICE

Commissioner for Patents
United States Patent and Trademark Office
P.O. Box 1450
Alexandria, VA 22313-1450
www.uspto.gov

JAN 1 8 2011

Shook, Hardy & Bacon LLP
Intellectual Property Department
2555 Grand Blvd.
Kansas City, MO 64108-2613

In re application of Sara F. Kibbe et al. Application No. 11/249,289 Filed: October 13, 2005 For: GIFT CARD HOLDER	: : : : :	**DECISION ON PETITION FOR SECOND SUSPENSION OF ACTION UNDER 37 CFR 1.103 (a)**

This letter is responsive to the petition for a second suspension of action under 37 CFR 1.103(a) received on January 6, 2011.

The petition for suspension of action under 37 CFR 1.103(a) is **GRANTED**.

A grantable petition for suspension of action under 37 CFR 1.103(a) requires:

1) A showing of good and sufficient cause for suspension of action, and
2) The fee set forth in 37 CFR 1.17(g), unless such cause is the fault of the Office.

Petitioner filed a first request on February 11, 2010 to suspend action by the examiner due to the applicant discovering U.S. Patent 7,490,720, that applicant believes "erroneously fail to list applicants as inventors of the subject matter described therein". Applicant is currently in negotiation with the assignee of the '720 patent to list the applicants as co-inventors, and that the "requested suspension period would permit the parties to negotiate without the pressure of impending prosecution deadlines". A decision granting a six (6) month suspension was mailed on May 14, 2010.

In the latest petition filed January 6, 2011 applicant requests and additional six (6) months suspension for the same reasons conveyed in the February 11, 2010 petition.

As there is an on going question of inventorship in a related patent, it is deemed that this constitutes a good and sufficient reason why a second suspension should be granted, and thus applicant's request for an additional period of suspension of six (6) months is reasonable and will be **GRANTED**.

However, at the conclusion of this latest period of suspension, applicant will have had at least 17 months to clear up the ownership issue in the related patent. Suspension of action can not go on indefinitely. As a result, applicant should not expect to receive another suspension at the conclusion of this latest 6 month suspension period. Any such future request will need to go into specific detail as to the current status of the negotiations over the correction of inventorship in the patent, what relationship the applicant has to the owners of the related patent, what appears to be holding up a concluding of the negotiations, what specific purpose any requested extra suspension time requested would serve to reach a conclusion to the negotiations, etc. So, while the latest suspension request has been granted, reasons, absent from those already addressed, as to why further suspensions are warranted and should be granted must be addressed in future requests.

Action by the Office on this application is suspended under 37 CFR 1.103(a) for a period of six (6) months from the date of this letter. At the end of this period applicant is required to notify the examiner and request commencement of prosecution or a further suspension. See MPEP 709. If applicant wishes to commence prosecution earlier than the expiration of the 6 month period, the examiner should be so notified.

The period for suspension will be six (6) months from the date of this letter.

Any questions surrounding this decision should be directed to Quality Assurance Specialist Steven N. Meyers at (571) 272-6611.

Dave Talbott, Director
Technology Center 3600
(571) 272-5150

SNM: 01/11/11
SM

UNITED STATES PATENT AND TRADEMARK OFFICE

UNITED STATES DEPARTMENT OF COMMERCE
United States Patent and Trademark Office
Address: COMMISSIONER FOR PATENTS
P.O. Box 1450
Alexandria, Virginia 22313-1450
www.uspto.gov

WESTERMAN, HATTORI, DANIELS & ADRIAN, LLP
1250 CONNECTICUT AVENUE, NW
SUITE 700
WASHINGTON, DC 20036

Mail Date: 01/12/2011

Applicant	: Yumiko Koura	: DECISION ON REQUEST FOR
Patent Number	: 7611984	: RECALCULATION of PATENT
Issue Date	: 11/03/2009	: TERM ADJUSTMENT IN VIEW
Application No	: 11/249,442	: OF WYETH AND NOTICE OF INTENT TO
Filed	: 10/14/2005	: ISSUE CERTIFICATE OF CORRECTION
		:

The Request for Recalculation is **GRANTED** to the extent indicated.

The patent term adjustment has been determined to be **232** days. The USPTO will *sua sponte* issue a certificate of correction reflecting the amount of PTA days determined by the recalculation.

Prior to the issuance of the certificate of correction, the USPTO will afford patentee an opportunity to be heard and request reconsideration. Accordingly, patentee has **one month or thirty (30) days**, whichever is longer, to file a request for reconsideration of this patent term adjustment calculation. See 35 U.S.C. 154(b)(3)(B)(ii) and 37 CFR 1.322(a)(4). No extensions of time will be granted under 37 CFR 1.136.

Patentee should use document code PET.OP if electronically filing a request for reconsideration of this patent term adjustment calculation. The patentee must also include the information required by 37 CFR 1.705(b)(2) and the fee required by 37 CFR 1.18(e). If patentee does not file a timely request for reconsideration of this patent term adjustment calculation including the information required by 37 CFR 1.705(b)(2) and the fee required by 37 CFR 1.18(e), the USPTO will issue a certificate of correction reflecting the PTA determination noted above.

Patentee should be aware that in order to preserve the right to review in the United States District Court for the District of Columbia of the USPTO patent term adjustment determination, patentee must ensure that he or she also take the steps required under 35 U.S.C. 154(b)(4)(A) in a timely manner. Nothing in the request for recalculation should be construed as providing an alternative time frame for commencing a civil action under 35 U.S.C. 154(b)(4)(A).

Any questions concerning this decision should be directed to the Office of Patent Legal Administration at 571-272-7702.

UNITED STATES PATENT AND TRADEMARK OFFICE

Commissioner for Patents
United States Patent and Trademark Office
P.O. Box 1450
Alexandria, VA 22313-1450
www.uspto.gov

June 16, 2011

Westerman, Hattori, Daniels & Adrian, LLP
1250 Connecticut Avenue, NW
Suite 700
Washington, DC 20036

Patent No: 7,611,984 B2
Application No: 11/249,442
Applicant: Yumiko Koura, et al.
Issued: November 3, 2009
Title: **MANUFACTURE METHOD FOR SEMICONDUCTOR DEVICE HAVING IMPROVED COPPER DIFFUSION PREVENTIVE FUNCTION OF PLUGS AND WIRINGS MADE OF COPPER OR COPPER ALLOY**

Request for Certificate of Correction:

Consideration has been given to your request for the issuance of a certificate of correction for the above- identified patent under the provisions of Rule 1.322.

Comparison of the patent in (*) Notice on the title page, with the corresponding location in the application file reveals that there is no discrepancy.

In view of the foregoing your request in this matter is hereby **denied**.

Further correspondence concerning this matter should be directed to Decisions and Certificate of Correction Branch.

/Virginia Tolbert/
Virginia Tolbert
For Mary Diggs, Supervisor
Decisions and Certificate of Correction
(571) 272-0460

vt

UNITED STATES PATENT AND TRADEMARK OFFICE

Commissioner for Patents
United States Patent and Trademark Office
P.O. Box 1450
Alexandria, VA 22313-1450
www.uspto.gov

DOCKET CLERK
P.O. DRAWER 800889
DALLAS TX 75380

MAILED
AUG 24 2010
OFFICE OF PETITIONS

In re Patent No. 7,604,145	:	DECISION ON REQUEST FOR
Percy	:	RECONSIDERATION OF
Issue Date: October 20, 2009	:	PATENT TERM ADJUSTMENT AND
Application No. 11/249,525	:	NOTICE OF INTENT TO ISSUE
Filed: October 14, 2005	:	CERTIFICATE OF CORRECTION
Attorney Docket No.DIXI01-00019:		

This is a decision on the petition filed on May 10, 2010, which is being treated as a renewed petition under 37 CFR 1.705(d) requesting that the patent term adjustment indicated on the above-identified patent be corrected to indicate that the term of the above-identified patent is extended or adjusted by four hundred and seventy-seven (477) days.

The petition to correct the patent term adjustment indicated on the above-identified patent is **GRANTED TO THE EXTENT INDICTED HEREIN**. The term of the above-identified patent is extended or adjusted by **three hundred and eleven (311) days**.

It is noted that patentees state that the appeal period to be excluded from the "B" delay period began October 14, 2008, and ended, February 24, 2009. The Office reminds patentees that the period consumed by appellate review, whether successful or not, is excluded from the calculation of B delay. See 35 U.S.C. 154(b)(1)(B)(ii). In this instance, the period consumed by appellate review is 299 days, beginning on the date on which the notice of appeal to the Board of Patent Appeals and Interferences was filed, May 2, 2008, and ending on February 24, 2009, the date the non-final Office action was mailed. Thus, the B delay is 72 days (371 - 299).

In view thereof, the revised patent term adjustment is 311 days (318 days of Office delay - 7 days of applicant delay).

The Office will *sua sponte* issue a certificate of correction. Pursuant to 37 CFR 1.322, the Office will not issue a certificate of correction without first providing assignee or patentee an opportunity to be heard. Accordingly, patentee is given **one (1) month or thirty (30) days**, whichever is longer, from the mail date of this decision to respond. No extensions of time will be granted under § 1.136.

The Office acknowledges the submission of the $200.00 fee set forth in 37 CFR 1.18(e). No additional fee is due.

Nothing in this decision shall be construed as a waiver of the requirement of 35 U.S.C. 154(b)(4) that any civil action by an applicant dissatisfied with a determination made by the Director under 35 U.S.C. 154(b)(3) be filed in the United States District Court for the District of Columbia within 180 days after the grant of the patent.

This matter is being referred to the Certificates of Correction Branch for issuance of a certificate of correction. The Office will issue a certificate of correction indicating that the term of the above-identified patent is extended or adjusted by **three hundred eleven (311) days**.

Telephone inquiries specific to this matter should be directed to the undersigned at (571) 272-3222.

/Kenya A. McLaughlin/

Kenya A. McLaughlin
Petitions Attorney
Office of Petitions

Enclosure: Copy of DRAFT Certificate of Correction

DRAFT COPY

UNITED STATES PATENT AND TRADEMARK OFFICE

CERTIFICATE OF CORRECTION

PATENT : 7,604,145 B2

DATED : Oct. 20, 2009

INVENTOR(S) : Percy

It is certified that error appears in the above-identified patent and that said Letters Patent is hereby corrected as shown below:

On the cover page,

[*] Notice: Subject to any disclaimer, the term of this patent is extended or adjusted under 35 USC 154(b) by (364) days

Delete the phrase "by 364 days" and insert – by 311 days--

UNITED STATES PATENT AND TRADEMARK OFFICE

COMMISSIONER FOR PATENTS
UNITED STATES PATENT AND TRADEMARK OFFICE
P.O. BOX 1450
ALEXANDRIA, VA 22313-1450
www.uspto.gov

MAILED
OCT 15 2010
OFFICE OF PETITIONS

DOCKET CLERK
P.O. DRAWER 800889
DALLAS TX 75380

In re Application of	:	
COLLINS et al.	:	
Application No. 11/249,526	:	DECISION ON APPLICATION
Filed: 10/14/2005	:	FOR
Atty Docket No. DIXI01-00003	:	PATENT TERM ADJUSTMENT

This is a decision on the "REQUEST FOR RECONSIDERATION OF PATENT TERM ADJUSTMENT DETERMINATION UNDER 37 C.F.R. 1.705(b)" filed September 20, 2010. Applicants request that the initial determination of patent term adjustment under 35 U.S.C. 154(b) be corrected from four hundred seventy-nine (479) days to four hundred eighty-one (481) days.

The application for patent term adjustment is **GRANTED**.

The Office has updated the PALM and PAIR screens to reflect that the corrected Patent Term Adjustment (PTA) determination at the time of the mailing of the Notice of Allowance is four hundred eighty-one (481) days. A copy of the updated PAIR screen, showing the corrected determination, is enclosed.

A review of the application history confirms that applicant's characterization of the basis for and amounts of the adjustments and reductions of patent term in this application at the time of the mailing of the notice of allowance are correct.

In view thereof, the corrected determination of patent term adjustment at the time of the mailing of the notice of allowance is four hundred eighty-one (481) days.

The Office acknowledges receipt of the $200.00 fee set forth in 37 CFR 1.18(e). No additional fees are required.

Applicants are reminded that any delays by the Office pursuant to 37 CFR 1.702(a)(4) and 1.702(b) and any applicant delays under 37 CFR 1.704(c)(10) will be calculated at the time of the issuance of the patent and applicants will be notified in the Issue Notification letter that is mailed to applicants approximately three weeks prior to issuance.

The Office of Data Management has been advised of this decision. This matter is being referred to the Office of Data Management for issuance of the patent.

Telephone inquiries specific to this matter should be directed to the undersigned at (571) 272-3211.

Christina Tartera Donnell

Christina Tartera Donnell
Senior Petitions Attorney
Office of Petitions

Enclosure: Copy of REVISED PAIR Screen

Patent Term Adjustments

Patent Term Adjustment (PTA) for Application Number: 11/249,526

Filing or 371(c) Date:	10-14-2005	Overlapping Days Between {A and B} or {A and C}:	0
Issue Date of Patent:	-	Non-Overlapping USPTO Delays:	491
A Delays:	491	PTO Manual Adjustments:	2
B Delays:	0	Applicant Delays:	12
C Delays:	0	Total PTA Adjustments:	481

Patent Term Adjustment History **Explanation Of Calculations**

Number	Date	Contents Description	PTO (Days)	APPL (Days)	Start
79	09-29-2010	Adjustment of PTA Calculation by PTO		6	0
78	09-29-2010	Adjustment of PTA Calculation by PTO	8		0
68	06-18-2010	Mail Notice of Allowance			0
67	06-11-2010	Issue Revision Completed			0
66	06-11-2010	Notice of Allowance Data Verification Completed			0
65	06-11-2010	Case Docketed to Examiner in GAU			0
64	06-10-2010	Allowed Case Returned to the Examiner for Clerical Processing			0
63	06-10-2010	Document Verification			0
62	06-07-2010	Examiner's Amendment Communication			0
61	06-07-2010	Notice of Allowability			0
58	06-02-2010	Date Forwarded to Examiner			0
57	06-01-2010	Amendment after Final Rejection			0
56	04-02-2010	Electronic Review			0
55	04-01-2010	Email Notification			0
54	04-01-2010	Mail Final Rejection (PTOL - 326)			0
53	03-28-2010	Final Rejection			0
52	01-17-2010	Date Forwarded to Examiner			0
51	12-11-2009	Response after Non-Final Action			0

50	09-11-2009	Electronic Review			0
49	09-11-2009	Email Notification			0
48	09-11-2009	Mail Non-Final Rejection	15		44
47	09-09-2009	Non-Final Rejection			0
46	05-26-2009	Appeal Brief Review Complete			0
45	05-26-2009	Date Forwarded to Examiner			0
44	04-27-2009	Appeal Brief Filed			0
43	03-19-2009	Mail Appeals conf. Proceed to BPAI			0
42	03-17-2009	Pre-Appeals Conference Decision - Proceed to BPAI			0
41	01-21-2009	Request for Pre-Appeal Conference Filed			0
40	01-23-2009	Notice of Appeal Filed		8	35
39	01-23-2009	Mail Advisory Action (PTOL - 303)			0
38	01-21-2009	Advisory Action (PTOL-303)			0
37	01-06-2009	Date Forwarded to Examiner			0
36	12-15-2008	Amendment after Final Rejection			0
35	10-15-2008	Mail Final Rejection (PTOL - 326)			0
34	10-14-2008	Final Rejection			0
33	08-07-2008	Date Forwarded to Examiner			0
32	07-07-2008	Response after Non-Final Action		4	30
31	07-07-2008	Request for Extension of Time - Granted			0
30	04-03-2008	Mail Non-Final Rejection	476		-1
29	03-31-2008	Non-Final Rejection			0
25	03-08-2006	Information Disclosure Statement considered			0
24	08-24-2006	Information Disclosure Statement considered			0
22	10-15-2007	Case Docketed to Examiner in GAU			0

21	05-17-2007	PG-Pub Issue Notification	0
20	12-28-2006	Correspondence Address Change	0
19	12-28-2006	Change in Power of Attorney (May Include Associate POA)	0
18	08-24-2006	Reference capture on IDS	0
17.7	08-24-2006	Information Disclosure Statement (IDS) Filed	0
17	08-24-2006	Information Disclosure Statement (IDS) Filed	0
16	03-08-2006	Reference capture on IDS	0
15.7	03-08-2006	Information Disclosure Statement (IDS) Filed	0
15	03-08-2006	Information Disclosure Statement (IDS) Filed	0
14	04-04-2006	Case Docketed to Examiner in GAU	0
13	04-04-2006	IFW TSS Processing by Tech Center Complete	0
12	02-24-2006	Application Return from OIPE	0
11	02-24-2006	Application Is Now Complete	0
10	02-24-2006	Application Return TO OIPE	0
9	02-24-2006	Application Dispatched from OIPE	0
8	02-24-2006	Application Is Now Complete	0
7	02-09-2006	Additional Application Filing Fees	0
6	02-09-2006	A statement by one or more inventors satisfying the requirement under 35 USC 115, Oath of the Applic	0
5	11-09-2005	Notice Mailed--Application Incomplete--Filing Date Assigned	0
3	11-03-2005	Cleared by OIPE CSR	0
2	11-01-2005	IFW Scan & PACR Auto Security Review	0
1	10-14-2005	Initial Exam Team nn	0

Close Window

UNITED STATES PATENT AND TRADEMARK OFFICE

Commissioner for Patents
United States Patent and Trademark Office
P.O. Box 1450
Alexandria, VA 22313-1450
www.uspto.gov

DAVID A. GOTTARDO
DAVID A. GOTTARDO, ATTORNEY AT LAW
P.O. Box 44657
Racine WI 53404

MAILED
JUN 20 2011
OFFICE OF PETITIONS

In re Application of	:	
Dana G. Nielsen	:	
Application No. 11/249,702	:	DECISION ON PETITION
Filed: October 13, 2005	:	
Attorney Docket No. DN-DN-01	:	

This is a decision on the petition under the unintentional provisions of 37 CFR 1.137(b), filed May 2, 2011, to revive the above-identified application.

The petition is **GRANTED**.

This application became abandoned for failure to timely pay the issue fee on or before March 9, 2011, as required by the Notice of Allowance and Fee(s) Due, mailed December 9, 2010. Accordingly, the date of abandonment of this application is March 10, 2011. A Notice of Abandonment was mailed on March 25, 2011.

The petition satisfies the requirements of 37 CFR 1.137(b) in that petitioner has supplied (1) the reply in the form of payment of the issue fee of $755, (2) the petition fee of $810, and (3) a proper statement of unintentional delay. Accordingly, the issue fee is accepted as being unintentionally delayed.

Telephone inquiries concerning this decision should be directed to Kimberly Inabinet at (571) 272-4618.

This application is being referred to the Office of Data Management for further processing into a patent.

/Kimberly A. Inabinet/

Kimberly A. Inabinet
Petitions Examiner
Office of Petitions

UNITED STATES PATENT AND TRADEMARK OFFICE

UNITED STATES DEPARTMENT OF COMMERCE
United States Patent and Trademark Office
Address: COMMISSIONER FOR PATENTS
P.O. Box 1450
Alexandria, Virginia 22313-1450
www.uspto.gov

APPLICATION NO.	FILING DATE	FIRST NAMED INVENTOR	ATTORNEY DOCKET NO.	CONFIRMATION NO.
11/249,897	10/13/2005	Adam L. Berger	19647-0004001	2802

7590 11/24/2010
FISH & RICHARDSON P.C. (BO)
P.O. BOX 1022
MINNEAPOLIS, MN 55440-1022

EXAMINER
THIRUGNANAM, GANDHI

ART UNIT	PAPER NUMBER
2624	

NOTIFICATION DATE	DELIVERY MODE
11/24/2010	ELECTRONIC

ACKNOWLEDGEMENT OF REQUEST

Notice of Allowance/Allowability Mailed

The request to print a color drawing reference as the first paragraph in the portion of the specification containing a brief description of the drawings as required by 37 CFR 1.84 and MPEP § 608.02 has been received by the United States Patent and Trademark Office and will be entered into the specification.

571-272-4200 or 1-888-786-0101
Application Assistance Unit
Office of Data Management

FORM PTOM327-5 (Rev. 02/08)

UNITED STATES PATENT AND TRADEMARK OFFICE

Commissioner for Patents
United States Patent and Trademark Office
P.O. Box 1450
Alexandria, VA 22313-1450
www.uspto.gov

November 24, 2010

FISH & RICHARDSON P.C. (BO)
P.O. BOX 1022
MINNEAPOLIS MN 55440-1022

In re Application of	:	
Adam L. Berger et al.	:	**DECISION ON PETITION**
Application No. 11249897	:	
Filed: 10/13/2005	:	***ACCEPTANCE OF COLOR***
Attorney Docket No. 19647-0004001	:	***DRAWINGS***

This is a decision on the Petition to Accept Color Drawings under 37 C.F.R 1.84 (a) (2), received in the United States Patent and Trademark Office (USPTO) January 27, 2006.

The petition is **GRANTED**.

A grantable petition under 37 C.F.R. 1.84(a) (2) must be accompanied by the following.

1. The fee set forth under 37 C.F.R. 1.17(h),
2. Three (3) sets of the color drawings in question, or (1) set if filed via EFS, and
3. The specification contains appropriate language referring to the color drawings as the first paragraph in that portion of the specification relating to the brief description of the drawings.

The petition was accompanied by all of the required fees and drawings. The specification contains the appropriate language. Therefore, the petition is GRANTED.

Telephone inquires relating to this decision may be directed to the undersigned in the Office of Data Management at 571-272-4200.

/Don Fairchild/
Office of Data Management
Publications Branch

UNITED STATES PATENT AND TRADEMARK OFFICE

Commissioner for Patents
United States Patent and Trademark Office
P.O. Box 1450
Alexandria, VA 22313-1450
www.uspto.gov

FISH & RICHARDSON P.C. (BO)
P.O. BOX 1022
MINNEAPOLIS MN 55440-1022

MAILED
APR 05 2011
OFFICE OF PETITIONS

In re Patent No. 7,876,978 :
Issue Date: January 25, 2011 :
Application No. 11/249,897 : DECISION ON PETITION
Filed: October 13, 2005 :
Attorney Docket No. 19647-0004001 :

This is a decision on the Petition To Correct Assignee Under 37 CFR §3.81, filed February 1, 2011, which is being treated as Petition Under 37 CFR §3.81(b), to identify the correct assignee's name. A completed Certificate of Correction Form (Substitute PTO/SB/44) was submitted with Petition.

The petition under 37 CFR §3.81(b) is **GRANTED**.

Petitioner urges that the present Petition was submitted to correct the assignee's name on the previously submitted PTOL 85B. Accordingly, petitioner urges, in effect, that the Title Page of the above-identified patent be corrected, via issuance of Certificate of Correction, to correct the assignee's name identified thereon from:

"Penthera Technologies, Inc."

to:

--Penthera Partners, Inc.--

37 CFR 3.81(b), effective June 25, 2004, reads:

> *After payment of the issue fee:* Any request for issuance of an application in the name of the assignee submitted after the date of payment of the issue fee, and any request for a patent to be corrected to state the name of the assignee, must state that the assignment was submitted for recordation as set forth in § 3.11 before issuance of the patent, and must include a request for a certificate of correction under § 1.323 of this chapter (accompanied by the fee set forth in § 1.20(a) and the processing fee set forth in § 1.17(i) of this chapter.

The requisite $130.00 processing fee (Fee Code 1464), as set forth under 37 CFR 1.17(i), has been submitted. However, the requisite $100.00 fee (Fee Code 1811), as set forth under 37 CFR 1.20(a), is required. Therefore, since the petition was accompanied deposit account authorization, the fee has been charged. Further, Office assignment records are consistent with the requested correction. Accordingly, since the Petition complies with the provisions of 37 CFR 3.81(b), it is appropriate for the Office to issue a Certificate of Correction in accordance with the content of the Form (Substitute PTO/SB/44) submitted with Petition.

The file does not indicate a change of address has been submitted, although the address given on the petition differs from the address of record. If appropriate, a change of address should be filed in accordance with MPEP 601.03. A courtesy copy of this decision is being mailed to the address given on the petition; however, the Office will mail all future correspondence solely to the address of record.

Inquiries related this communication should be directed to the undersigned at (571)272-3213.

Any questions concerning the issuance of a Certificate of Correction should be directed to the Certificates of Correction Branch at (703)756-1814.

This matter is being referred to the Certificates of Correction Branch for processing of a Certificate of Correction in U.S. Patent No. 7,876,978.

Cheryl Gibson-Baylor

Cheryl Gibson-Baylor
Petitions Examiner
Office of Petitions

cc: Fish &Richardson P.C.
One Marina Park Drive
Boston, MA 02210-1878

UNITED STATES PATENT AND TRADEMARK OFFICE

Commissioner for Patents
United States Patent and Trademark Office
P.O. Box 1450
Alexandria, VA 22313-1450
www.uspto.gov

MAILED

JUN 16 2011

OFFICE OF PETITIONS

FISH & RICHARDSON P.C. (BO)
P.O. BOX 1022
MINNEAPOLIS MN 55440-1022

In re Patent No. 7,876,978
Berger et al.
Issue Date: January 25, 2011
Application No. 11/249,897
Filed: October 13, 2005
Attorney Docket No. 19647-0004001
Title: REGIONS OF INTEREST IN VIDEO FRAMES

DECISION ON REQUEST FOR RECONSIDERATION OF PATENT TERM ADJUSTMENT

This is a decision on the petition filed on March 9, 2011, which is being treated as a petition under 37 CFR 1.705(d) requesting that the patent term adjustment indicated on the above-identified patent be corrected to indicate that the term of the above-identified patent is extended or adjusted by six hundred thirteen (613) days.

The request for reconsideration of the patent term adjustment (PTA) pursuant to 37 CFR 1.705(d) is **DISMISSED**.

The above-identified application matured into U.S. Pat. No. 7,876,978 on January 25, 2011. The patent issued with a patent term adjustment of 494 days. The instant application for patent term adjustment was timely filed in accordance with 37 CFR 1.705(d). Patentee contests the period of adjustment of 226 days accorded pursuant to 37 CFR 1.702(b) and assert that the correct period of adjustment under 37 CFR 1.702(b) is 345 days.

Petitioner's arguments have been carefully considered, but are not persuasive. The period of adjustment pursuant to 37 CFR 1.702(b) was properly calculated at 226 days.

35 USC 154(b)(1)(B) states in relevant part:

Subject to the limitations under paragraph (2), if the issue of an original patent is delayed due to the failure of the United States Patent and Trademark Office to issue a patent within 3

years after the actual filing date of the application in the United States, not including – (i) any time consumed by continued examination of the application requested by the applicant under section 132(b).

37 CFR 1.702(b) states in relevant part:

Subject to the provisions of 35 U.S.C. 154(b) and this subpart, the term of an original patent shall be adjusted if the issuance of the patent was delayed due to the failure of the Office to issue a patent within three years after the date on which the application was filed under 35 U.S.C. 111(a) or the national stage commenced under 35 U.S.C. 371(b) or (f) in an international application, but not including: (1) Any time consumed by continued examination of the application under 35 U.S.C. 132(b).

37 CFR 1.703(b) states in relevant part:

The period of adjustment under § 1.702(b) is the number of days, if any, in the period beginning on the day after the date that is three years after the date on which the application was filed under 35 U.S.C. 111(a) or the national stage commenced under 35 U.S.C. 371(b) or (f) in an international application and ending on the date a patent was issued, but not including the sum of the following periods: (1) The number of days, if any, in the period beginning on the date on which a request for continued examination of the application under 35 U.S.C. 132(b) was filed and ending on the date the patent was issued.

Accordingly, in the instant matter, and in compliance with the provisions of law and rules set forth above, the period of adjustment under § 1.702(b) is 226 days.

In view thereof, no adjustment to the patent term will be made.

Nothing in this decision shall be construed as a waiver of the requirement of 35 U.S.C. 154(b)(4) that any civil action by an applicant dissatisfied with a determination made by the Director under 35 U.S.C. 154(b)(3) be filed in the United States District Court for the District of Columbia within 180 days after the grant of the patent.

The Office acknowledges submission of the $200.00 fee set forth in 37 CFR 1.18(e). No additional fees are required.

Telephone inquiries specific to this matter should be directed to the undersigned at (571) 272-3215.

Charlema Grant

Charlema Grant
Attorney
Office of Petitions

UNITED STATES PATENT AND TRADEMARK OFFICE

Commissioner for Patents
United States Patent and Trademark Office
P.O. Box 1450
Alexandria, VA 22313-1450
www.uspto.gov

KEITH FRANTZ
401 WEST STATE STREET
SUITE 200
ROCKFORD IL 61101

MAILED

DEC 06 2010

OFFICE OF PETITIONS

In re Application of	:	
Steven John MASSMAN	:	
Application No. 11/250,132	:	DECISION ON PETITION
Filed: October 13, 2005	:	
Attorney Docket No.	:	

This is a decision on the petition under the unintentional provisions of 37 CFR 1.137(b), filed October 27, 2010, to revive the above-identified application.

The petition is **GRANTED**.

The application became abandoned for failure to timely pay the issue fee on or before February 17, 2010, as required by the Notice of Allowance and Fee(s) Due, mailed November 17, 2009, which set a statutory period for reply of three (3) months. Accordingly, the application became abandoned on February 18, 2010.

The petition satisfies the requirements of 37 CFR 1.137(b) in that petitioner has supplied (1) the reply in the form of payment of the issue fee of $755; (2) the petition fee of $810; and (3) the required statement of unintentional delay.

Telephone inquiries concerning this decision should be directed to the undersigned at (571) 272-6735.

The application is being referred to the Office of Data Management for processing into a patent.

/Diane C. Goodwyn/
Diane C. Goodwyn
Petitions Examiner
Office of Petitions

UNITED STATES PATENT AND TRADEMARK OFFICE

Commissioner for Patents
United States Patent and Trademark Office
P.O. Box 1450
Alexandria, VA 22313-1450
www.uspto.gov

Law Office of Jens E. Hoekendijk
P.O. BOX 4787
BURLINGAME CA 94011-4787

MAILED
FEB 07 2012
OFFICE OF PETITIONS

In re Application of :
Sepetka, et al. :
Application No. 11/250,190 : ON PETITION
Filed: October 13, 2005 :
Attorney Docket No. **005-016**

This is a decision on the petition under 37 CFR 1.137(b), filed January 14, 2012, to revive the above-identified application.

The petition under 37 CFR 1.137(b) is **GRANTED**.

The above-identified application became abandoned on July 28, 2011, for failure to file a proper reply to the final Office action mailed April 27, 2011, which set a shortened statutory period for reply of three (3) months from its mailing date. A Notice of Abandonment was mailed December 8, 2011.

The Request for Continued Examination and amendment filed January 14, 2012, are noted.

The application file is being forwarded to Technology Center, GAU 3773 for further processing.

Telephone inquiries concerning this decision should be directed to the undersigned at (571) 272-3222.

/Kenya A. McLaughlin/

Kenya A. McLaughlin
Petitions Attorney
Office of Petitions

UNITED STATES PATENT AND TRADEMARK OFFICE

Commissioner for Patents
United States Patent and Trademark Office
P.O. Box 1450
Alexandria, VA 22313-1450
www.uspto.gov

MOTOROLA, INC.
600 NORTH US HIGHWAY 45
W4 - 39Q
LIBERTYVILLE IL 60048-5343

MAILED

OCT 20 2010

OFFICE OF PETITIONS

In re Application of	:	
Eric J. Sprunk	:	
Application No. 11/250,352	:	DECISION ON PETITION
Filed: October 14, 2005	:	
Attorney Docket No. D02316-C06	:	

This is a decision on the petition under the unintentional provisions of 37 CFR 1.137(b), filed September 29, 2010, to revive the above-identified application.

The petition is **GRANTED**.

The above-identified application became abandoned for failure to reply in a timely manner to the Notice of Non-Compliant Amendment mailed October 28, 2009, which set a period for reply of one (1) month or thirty (30) days, whichever is longer. No extensions of time under the provisions of 37 CFR 1.136(a) were obtained. Accordingly, the above-identified application became abandoned on November 29, 2009. A Notice of Abandonment was mailed June 10, 2010.

The petition satisfies the requirements of 37 CFR 1.137(b) in that petitioner has supplied (1) the reply in the form of an Amendment, (2) the petition fee of $1,620.00 and (3) a proper statement of unintentional delay.

Further, it is not apparent whether the person signing the instant petition was ever given a power of attorney or authorization of agent to prosecute this patent application. In accordance with 37 CFR 1.34(a), the signature appearing on the petition shall constitute a representation to the United States Patent and Trademark Office that he/she is authorized to represent the particular party in whose behalf he/she acts. Additionally, the address given on the petition differs from the address of record. A courtesy copy of this decision is being mailed to the address given on the petition; however, the Office will mail all future correspondence solely to the address of record.

Telephone inquiries concerning this decision should be directed to the undersigned at (571) 272-7751.

The application file is being referred to Technology Center AU 2421 for appropriate action on the concurrently filed amendment.

Joan Olszewski
Petitions Examiner
Office of Petitions

cc: Stewart M. Wiener
101 Tournament Dr.
Horsham, PA 19044

UNITED STATES PATENT AND TRADEMARK OFFICE

Commissioner for Patents
United States Patent and Trademark Office
P.O. Box 1450
Alexandria, VA 22313-1450
www.uspto.gov

MAILED
OCT 29 2010
OFFICE OF PETITIONS

BioTechnology Law Group
12707 High Bluff Drive
Suite 200
San Diego CA 92130-2037

In re Application of	:	
Kenneth Blum	:	
Application No. 11/250,355	:	DECISION ON PETITION
Filed: October 14, 2005	:	
Attorney Docket No. DRD-1001-DV	:	

This is a decision on the petition, filed August 9, 2010, which is being treated as a petition under 37 CFR 1.8(a), requesting withdrawal of the holding of abandonment in the above-identified application.

The petition is **GRANTED**.

This application was held abandoned for failure to timely respond to the Office action of September 14, 2009, which set a (3) month shortened statutory period for reply. Accordingly, a reply was due on or before December 14, 2009, or, on or before March 15, 2010, with a three (3) month extension of time. A Notice of Abandonment was mailed April 7, 2010.

Petitioner states that a timely reply was mailed via certificate of mailing on March 15, 2010 which included the following papers: an Amendment and Response, a Notice of Appeal and a request for three (3) month extension of time.

The file record includes the originally submitted papers. However, the papers were received at the Office on April 7, 2010. Failure to timely receive correspondence which includes a certificate of mailing or certificate of facsimile transmission is addressed in 37 CFR 1.8(a), reproduced below:

Except in the situations enumerated in paragraph (a)(2) of this section or as otherwise expressly excluded in this chapter, correspondence required to be filed in the U.S. Patent and Trademark Office within a set period of time will be considered as being timely filed if the procedure described in this section is followed. The actual date of receipt will be used for all other purposes.

(1) Correspondence will be considered as being timely filed if:

(i) The correspondence is mailed or transmitted prior to expiration of the set period of time by being:

(A) Addressed as set out in § 1.1(a) and deposited with the U.S. Postal Service with sufficient postage as first class mail;

(B) Transmitted by facsimile to the Patent and Trademark Office in accordance with § 1.6 (d); or

(C) Transmitted via the Office electronic filing system in accordance with § 1.6(a)(4); and

(ii) The correspondence includes a certificate for each piece of correspondence stating the date of deposit or transmission. The person signing the certificate should have reasonable basis to expect that the correspondence would be mailed or transmitted on or before the date indicated.

The petition satisfies the above requirements of 37 CFR 1.8(a). Accordingly, the holding of abandonment for failure to timely file a reply to the Office action of September 14, 2009 is hereby withdrawn and the application restored to pending status.

This application is being referred to Technology Center AU 1649 for appropriate action in the normal course of business on the Amendment/Response and Notice of Appeal received April 7, 2010.

/Ramesh Krishnamurthy/
Ramesh Krishnamurthy
Petitions Examiner
Office of Petitions

UNITED STATES PATENT AND TRADEMARK OFFICE

UNITED STATES DEPARTMENT OF COMMERCE
United States Patent and Trademark Office
Address: COMMISSIONER FOR PATENTS
P.O. Box 1450
Alexandria, Virginia 22313-1450
www.uspto.gov

Terry W. Kramer, Esq.
Kramer & Amado, P.C.
1725 Duke Street, Suite 240
Alexandria, VA 22314

Mail Date: 08/03/2010

Applicant	: Jean-Marc Robert	: DECISION ON REQUEST FOR
Patent Number	: 7647623	: RECALCULATION of PATENT
Issue Date	: 01/12/2010	: TERM ADJUSTMENT IN VIEW
Application No	: 11/250,455	: OF WYETH AND NOTICE OF INTENT TO
Filed	: 10/17/2005	: ISSUE CERTIFICATE OF CORRECTION
		:

The Request for Recalculation is **GRANTED** to the extent indicated.

The patent term adjustment has been determined to be **920** days. The USPTO will *sua sponte* issue a certificate of correction reflecting the amount of PTA days determined by the recalculation.

Prior to the issuance of the certificate of correction, the USPTO will afford patentee an opportunity to be heard and request reconsideration. Accordingly, patentee has **one month or thirty (30) days**, whichever is longer, to file a request for reconsideration of this patent term adjustment calculation. See 35 U.S.C. 154(b)(3)(B)(ii) and 37 CFR 1.322(a)(4). No extensions of time will be granted under 37 CFR 1.136.

Patentee should use document code PET.OP if electronically filing a request for reconsideration of this patent term adjustment calculation. The patentee must also include the information required by 37 CFR 1.705(b)(2) and the fee required by 37 CFR 1.18(e). If patentee does not file a timely request for reconsideration of this patent term adjustment calculation including the information required by 37 CFR 1.705(b)(2) and the fee required by 37 CFR 1.18(e), the USPTO will issue a certificate of correction reflecting the PTA determination noted above.

Patentee should be aware that in order to preserve the right to review in the United States District Court for the District of Columbia of the USPTO patent term adjustment determination, patentee must ensure that he or she also take the steps required under 35 U.S.C. 154(b)(4)(A) in a timely manner. Nothing in the request for recalculation should be construed as providing an alternative time frame for commencing a civil action under 35 U.S.C. 154(b)(4)(A).

Any questions concerning this decision should be directed to the Office of Patent Legal Administration at 571-272-7702.

UNITED STATES PATENT AND TRADEMARK OFFICE

Commissioner for Patents
United States Patent and Trademark Office
P.O. Box 1450
Alexandria, VA 22313-1450
www.uspto.gov

THOMAS C. PONTANI, ESQ.
COHEN, PONTANI, LIEBERMAN & PAVANE
551 FIFTH AVENUE, SUITE 1210
NEW YORK NY 10176

MAILED
JUN 22 2011
OFFICE OF PETITIONS

In re Patent No. 7,640,872	:	
Issued: January 5, 2010	:	
Application No. 11/250,537	:	ON PETITION
Filed: October 14, 2005	:	
Attorney Docket No: 5150-36	:	

This is a decision regarding your request for acceptance of a fee deficiency submission and loss of small entity status filed June 16, 2011 under 37 CFR 1.28.

On September 1, 1998, the Court of Appeals for the Federal Circuit held that 37 CFR 1.28(c) is the sole provision governing the time for correction of the erroneous payment of the issue fee as a small entity. See DH Technology v. Synergystex International, Inc.. 154 F.33d 1333, 47 USPQ2d 1865 (Fed. Cir. Sept. 1, 1998).

The Office no longer investigates or rejects original or reissue applications under 37 CFR 1.56. 1098 Off. Gaz. Pat. Office 502 (January 3, 1989). Therefore nothing in this Notice is intended to imply that an investigation was done.

Your fee deficiency submission in the amount of $1730, under 37 CFR 1.28 is hereby accepted and the petition is **GRANTED**. Status as a small entity has also been removed.

Inquiries related to this communication should be directed to the Office of Petitions Staff at (571) 272-3282.

Patricia Faison-Ball

Patricia Faison-Ball
Senior Petitions Attorney
Office of Petitions

UNITED STATES PATENT AND TRADEMARK OFFICE

Commissioner for Patents
United States Patent and Trademark Office
P.O. Box 1450
Alexandria, VA 22313-1450
www.uspto.gov

FINNEGAN, HENDERSON, FARABOW,
GARRETT & DUNNER LLP
901 NEW YORK AVENUE, NW
WASHINGTON DC 20001-4413

MAILED

DEC 16 2011

OFFICE OF PETITIONS

In re Application of	:	
Hagiwara et al.	:	
Application No. 11/250636	:	ON APPLICATION FOR
Filing or 371(c) Date: 10/17/2005	:	PATENT TERM ADJUSTMENT
Attorney Docket Number: 09299.0025-00	:	

This is a decision on the "APPLICATION FOR PATENT TERM ADJUSTMENT – PRE-GTRANT, filed November 29, 2011. Applicants' request recalculation of the patent term adjustment calculation to 1462 days, not 821 days as calculated by the Office as of the mailing of the initial determination of patent term adjustment. Applicants request this correction based upon (1) an assertion that the Office erred in failing to calculate an adjustment of 500 days pursuant to 35 U.S.C. § 154(b)(1)(B), and (2) an assertion that the Office erred in failing to calculate an adjustment of 141 days pursuant to 35 U.S.C. § 154(b)(1)(C).

The Application for Patent Term Adjustment Including Request for Reconsideration of Patent Term Adjustment ("PTA") under 37 CFR 1.705(b), as it relates to the Office's failure to issue the patent within 3 years of the filing date, the application for patent term adjustment under 37 CFR 1.705(b) is **DISMISSED as PREMATURE**. The Application for Patent Term Adjustment Including Request for Reconsideration of Patent Term Adjustment ("PTA") under 37 CFR 1.705(b), as it relates to the assertion that the Office erred in failing to calculate an adjustment of 141 days is **DISMISSED**.

On August 29, 2011, the Office mailed the Determination of Patent Term Adjustment under 35 U.S.C. 154(b) in the above-identified application. The Notice stated that the patent term adjustment (PTA) to date is 821 days.

On November 29, 2011, applicants timely submitted the instant application for patent term adjustment[1]. Applicants request that the Determination of Patent Term Adjustment be corrected from 821 days, as indicated on the Determination of PTA mailed August 29, 2011, to an adjustment of 1462 days.

[1] PALM records show that the payment of the Issue Fee was filed on November 29, 2011.

Applicants aver that the Office erred in failing to calculate an adjustment of 500 days pursuant to 35 U.S.C. § 154(b)(1)(B), in connection with the failure of the Office to issue a patent within three years after the date on which the application was filed.

Applicants also assert that the Office erred in failing to calculate an adjustment of 141 days pursuant to 35 U.S.C. § 154(b)(1)(C), in connection with the filing of a Notice of Appeal and subsequent mailing of a Notice of Allowance. Applicants acknowledge that the current rule does not explicitly provide a patent term adjustment in this situation. Applicants, however, cite to proposed rules that would allow for a patent term adjustment in this situation. See, Revision of Patent Term Extension and Adjustment Provisions Relating to Appellate Review and Information Disclosure Statements, 76 Fed. Reg. 18990 (April 6, 2011).

Applicants' arguments have been carefully considered.

Regarding Applicants' assertion that the Office erred in failing to calculate an adjustment of 500 days pursuant to 35 U.S.C. § 154(b)(1)(B), in connection with the failure of the Office to issue a patent within three years after the date on which the application was filed, knowledge of the actual date the patent issues is required to calculate the amount, if any, of additional patent term patentee is entitled to for Office failure to issue the patent within 3 years. See § 1.702(b). (This is true even where a request for continued examination (RCE) was filed). The computer will not undertake the § 1.702(b) calculation until the actual date of issuance of the patent has been determined. Likewise, the computer will not calculate any further Office delay under § 1.702(a)(4) or applicant delay under § 1.704(c)(10) until the actual date of issuance of the patent has been determined. As such, the Office cannot make a determination on the correctness of the patent term adjustment until the patent has issued.

Requesting reconsideration of the patent term adjustment to be indicated on the patent under 37 CFR 1.705(b) based on the initial determination of patent term adjustment and a projected issuance date of the patent (or even the filing date of the request for continued examination) is premature. Accordingly, it is appropriate to dismiss as premature such a request.

Rather than file an application for patent term adjustment under 37 CFR 1.705(b) contesting the 37 CFR 1.702(b) calculation at the time of the mailing of the notice of allowance, applicant is advised that they may wait until the time of the issuance of the patent and file a request for reconsideration of the patent term adjustment pursuant to 37 CFR 1.705(d). As the USPTO does not calculate the amount of time earned pursuant to 37 CFR 1.702(b) until the time of the issuance of the patent, the Office will consider any request for reconsideration of the patent term adjustment due to an error in the calculation of 37 CFR 1.702(b) to be timely if the request for reconsideration is filed within two months of the issuance of the patent. However, as to all other bases for contesting the initial determination of patent term adjustment received with the notice of allowance, applicant must timely file an application for patent term adjustment prior to the payment of the issue fee[2].

---

[2] For example, if applicant disputes both the calculation of patent term adjustment under 37 CFR 1.702(a)(1) for Office failure to mail a first Office action or notice of allowance not later than fourteen months after the date on which the application was filed and under 37 CFR 1.702(b) for Office failure to issue a patent within three years of the actual filing date of the application, then applicant must still timely file an application for patent term adjustment prior to the payment of the issue fee to contest the calculation of Office delay in issuing a first Office action or notice of allowance. See 37 CFR 1.705(b) and 35 U.S.C.

Regarding Applicants request for 141 days of patent term adjustment pursuant to 35 U.S.C. § 154(b)(1)(C), in connection with the filing of a Notice of Appeal and subsequent mailing of a Notice of Allowance, as stated in the Notice of proposed rulemaking,

> The patent term adjustment provisions of the American Inventors Protection Act of 1999 (AIPA) and the patent term extension provisions of the Uruguay Round Agreements Act (URAA) each provide for patent term extension or adjustment if the issuance of the patent was delayed due to appellate review by the Board of Patent Appeals and Interferences (BPAI) or by a Federal court and the patent was issued pursuant to or under a decision in the review reversing an adverse determination of patentability. (Emphasis added).

Revision of Patent Term Extension and Adjustment Provisions Relating to Appellate Review and Information Disclosure Statements, 76 Fed. Reg. 18990 (April 6, 2011

The current statute and rules of practice do not provide for an adjustment of the patent term in this situation. Petitioner acknowledges that the current rule does not explicitly provide a patent term adjustment in this situation. The petition is therefore not grantable.

However, it is noted that the Office issued a Notice of proposed rulemaking entitled *Revision of Patent Term Extension and Adjustment Provisions Relating to Appellate Review and Information Disclosure Statements*, 76 FR 18990 (April 6, 2011). To the extent that the final rule on *Revision of Patent Term Extension and Adjustment Provisions Relating to Appellate Review* revises the interpretation of appellate review applied in this decision, Patentees are given **one (1) month or thirty (30) days**, whichever is longer, from the date of the final rule to file a request for reconsideration. No extensions of time will be granted under § 1.136.

The Office acknowledges submission of the $200.00 fee set forth in 37 CFR 1.18(e) for consideration of the application for patent term adjustment under 37 CFR 1.705(b).

Any request for reconsideration of the patent term adjustment indicated on the patent, including any request as it relates to the Office's failure to issue the patent within 3 years of the filing date, must be timely filed within 2 months after issuance pursuant to 37 CFR 1.705(d) and **must** include payment of the required fee under 37 CFR 1.18(e).

The Office of Data Management has been advised of this decision. This application is being referred to the Office of Data Management for issuance of the patent. The patent term adjustment indicated on the patent (as shown on the Issue Notification mailed about three weeks prior to patent issuance) will include any additional adjustment accrued both for Office delay in issuing the patent more than four months after payment of the issue fee and satisfaction of all

---

154(b)(3)(B). A dispute as to the calculation of the §1.702(a)(1) period raised on request for reconsideration of patent term adjustment under 37 CFR 1.705(d) will be dismissed as untimely filed.

outstanding requirements, and for the Office taking in excess of three years to issue the patent (to the extent that the three-year period does not overlap with periods already accorded).

Telephone inquiries specific to this matter should be directed to the undersigned at (571) 272-3232.

/DLW/

Derek L. Woods
Attorney
Office of Petitions

UNITED STATES PATENT AND TRADEMARK OFFICE

Commissioner for Patents
United States Patent and Trademark Office
P.O. Box 1450
Alexandria, VA 22313-1450
www.uspto.gov

FINNEGAN, HENDERSON, FARABOW,
GARRETT & DUNNER
LLP
901 NEW YORK AVENUE, NW
WASHINGTON DC 20001-4413

MAILED
APR 13 2012
OFFICE OF PETITIONS

In re Application of	:	
Hagiwara et al.	:	
Patent Number: 8,101,774	:	DECISION ON
Issue Date: 03/01/2011	:	APPLICATION FOR
Application No. 11/250636	:	PATENT TERM ADJUSTMENT
Filing or 371(c) Date: 10/17/2005	:	
Attorney Docket Number:	:	
09299.0025-00	:	

This is a decision on the petition filed on March 23, 2012, requesting that the patent term adjustment indicated on the above-identified patent be corrected to indicate that the term of the above-identified patent is extended or adjusted by one thousand seven hundred thirty-three (1733) days, or alternatively one thousand six hundred ten (1610) days.

The petition to correct the patent term adjustment indicated on the above-identified patent to indicate that the term of the above-identified patent is extended or adjusted by one thousand seven hundred thirty-three (1733) days, or alternatively one thousand six hundred ten (1610) days is **DISMISSED**.

Applicants assert that the Office erred in failing to calculate an adjustment of 141 days pursuant to 35 U.S.C. § 154(b)(1)(C), in connection with the filing of a Notice of Appeal and subsequent mailing of a first Notice of Allowance.

Applicants also aver that the Office erred in failing to calculate an adjustment of 553 days pursuant to 35 U.S.C. § 154(b)(1)(B), in connection with the failure of the Office to issue a patent within three years after the date on which the application was filed, during the period between the filing of a Request for Continued Examination ("RCE") to the issuance of the patent.

Finally, Applicants provide that in the event that this Office continues to deduct the period from the filing of a RCE to the issuance of the patent from the period of "B" delay, patentees request that the period from the mail date of a second Notice of Allowance (August 29, 2011) to the issuance of the patent (January 24, 2012), or 149 days, should not be subtracted from the "B"

delay because no examination was conducted during the period under the circumstances of this patent.

As to the period of time excluded from B delay for appellate review, Patentee's argument has been considered, but not found persuasive. The period consumed by appellate review, whether successful or not, is excluded from the calculation of B delay. See, 35 U.S.C. 154(b)(1)(B)(ii). An appeal to the Board of Patent Appeals and Interferences commences with the filing of a notice of appeal. See 35 U.S.C. 134(a). Generally, an appeal to the Board of Patent Appeals and Interferences ends with either 1) a Board decision, 2) the examiner reopening prosecution and issuing another Office action, or 3) the applicant filing a request to withdraw the appeal and reopen prosecution (e.g. the filing of a request for continued examination). In this instance the period consumed by appellate review is 141 days, beginning on December 2, 2009, the date of filing of the notice of appeal, and ending on April 21, 2010, the date of mailing of the Notice of Allowance.

It is again noted that the Office issued a Notice of proposed rulemaking entitled Revision of Patent Term Extension and Adjustment Provisions Relating to Appellate Review and Information Disclosure Statements,.76 FR 18990 (April 6, 2011). To the extent that the final rule on Revision of Patent Term Extension and Adjustment Provisions Relating to Appellate Review revises the interpretation of appellate review applied in this decision, Patentees are given one (1) month or thirty (30) days, whichever is longer, from the date of the final rule to file a request for reconsideration. No extensions of time will be granted under § 1.136.

Regarding the filing of the RCE, Patentees filed, inter alia, a Request for Continued Examination ("RCE"), on July 21, 2010. This Office mailed a Notice of Allowance and Issue Fee Due on August 29, 2011. Patentees request a PTA adjustment of five hundred fifty-three (553) days for the entire period between the filing of the RCE and the issue date of the patent, or at least an additional one hundred forty-nine (149) days of patent term adjustment representing the delay between the mailing of the second Notice of Allowance and the issue date of the patent. Patentees aver that with the mailing of the Notice of Allowance and Issue Fee Due on August 29, 2011, no examination was conducted during the period under the circumstances of this patent. Accordingly, Patentees aver that the Patent Term Adjustment under 35 U.S.C. § 154(b)(1)(B) should be calculated as 789 days.

Counting the period of time excluded from the "B delay" for the filing of a request for continued examination under 35 U.S.C. 132(b), from the date on which the request for continued examination is filed to the date the patent is issued is proper. Patentee does not dispute that time consumed by continued examination of an application under 35 U.S.C. 132(b) is properly excluded and that the calculation of the excluded period begins on the date of filing of the request for continued examination. At issue is what further processing or examination beyond the date of filing of the request for continued examination is not any time consumed by continued examination of the application under 35 U.S.C. 132(b). The USPTO indicated in September of 2000 in the final rule to implement the patent term adjustment provisions of the AIPA that once a request for continued examination under 35 U.S.C. 132(b) and 37 CFR 1.114 is

filed in an application, any further processing or examination of the application, including granting of a patent, is by virtue of the continued examination given to the application under 35 U.S.C. 132(b) and CFR 1.114. See Changes to Implement Patent Term Adjustment under Twenty-Year Patent Term, 65 Fed. Reg. 56366, 56376 (Sept. 18, 2000) (response to comment 8). Thus, the excluded period begins with the filing of the request for continued examination and ends with the issuance of the patent.

Patentee's argument that the period of time after the issuance of a notice of allowance on a request for continued examination is not "any time consumed by continued examination requested by the applicant under section 132(b)" within the meaning of 35 U.S.C. 154(b)(1)(B)(i) is not availing. This limitation is not supported by the statutory language. Garcia v. United States, 469 U.S. 70, 75 (1984) ("only the most extraordinary showing of contrary intentions from [legislative history] would justify a limitation on the 'plain meaning' of the statutory language"). BP Am. Prod. Co. v. Burton, 549 U.S. 84, 91 (2006) ("Unless otherwise defined, statutory terms are generally interpreted in accordance with their ordinary meaning"). The statute provides for a guarantee of no more than 3-year application pendency, by providing for an adjustment in the patent term:

First, "Subject to the limitations of paragraph (2)," means that the limitations of paragraph 2 apply to this paragraph's adjustment of patent term. That is, the day-to-day extension of patent term for pendency beyond the 3 year period is restricted as follows: 1) "B delay" cannot accrue for days of "A delay" that overlap, 2) the patent term cannot be extended beyond disclaimed term, and 3) the period of adjustment, including accrued "B delay," will be reduced for applicant delay.

Second, "if the issue of an original patent is delayed due to the failure of the United States Patent and Trademark Office to issue a patent within 3 years after the actual filing date of the application in the United States," meaning that the condition must first occur that the issuance of an original patent (35 U.S.C. 153), not merely the issuance of a notice of allowance, is delayed due to the Office's failure to issue a patent (sign and record a patent grant in the name of the United States), not merely mail a notice of allowance, within 3 years after the actual filing date of the application in the United States. This provision gives the Office a three-year period to issue a patent (sign and record a patent grant in the name of the United States) after the application filing date before an adjustment will accrue for "B delay."

Third, "not including- (i) any time consumed by continued examination of the application requested by the applicant under section 132(b); (ii) any time consumed by a proceeding under section 135(a), any time consumed by the imposition of an order under section 181, or any time consumed by appellate review by the Board of Patent Appeals and Interferences or by a Federal court; or (iii) any delay in the processing of the application by the United States Patent and Trademark Office requested by the applicant except as permitted by paragraph (3)(C), meaning that the three-year period does not include "any time consumed by" or "any delay in processing," as specified in clauses (i)-(iii). This language correlates to 35 U.S.C. 154(b)(1)(A) which likewise provides the basis for determining the period given the Office to take the specified

actions before an adjustment will accrue for "A delay" (e.g., extended for 1 day after the day after the period specified in clauses (i)-(iv)).

Furthermore, these clauses are interpreted using their ordinary meanings. Nonetheless, the context of the legislation should be considered. As stated in Wyeth v. Dudas, No. 07-1492, 2008 U.S. Dist. LEXIS 76063 (D.D.C., September 30, 2008), because the clock for calculating the 20-year patent term begins to run on the filing date, and not on the day the patent is actually granted, some of the effective term of a patent is consumed by the time it takes to prosecute the application. To mitigate this effect, the statute, *inter alia*, grants adjustments of patent term whenever the patent prosecution takes more than three years, regardless of the reason. The time consumed by prosecution of the application includes every day the application is pending before the Office from the actual filing date of the application in the United States until the date of issuance of the patent. The time it takes to prosecute the application ends not with the mailing of the notice of allowance, but with the issuance of the patent.

Thus, not including "any time consumed by" means not including any days used to prosecute the application as specified in clauses (i)-(ii)[1]. Clause (i) specifies "any time consumed by continued examination of the application requested by the applicant under section 132(b)." Clause (ii) specifies "any time consumed by a proceeding under section 135(a), any time consumed by the imposition of an order under section 181, or any time consumed by appellate review by the Board of Patent Appeals and Interferences or by a Federal court." "Time" in the context of this legislation throughout refers to days. "Consumed by" means used by or used in the course of. *Websters Collegiate Dictionary*, (11th ed.). The "any" signifies that the days consumed by are "any" of the days in the pendency of the application, and not just days that occur after the application has been pending for 3 years. As such, "any time consumed by" refers to any days used in the course of 1) continued examination of the application under section 132(b)(the filing of a request for continued examination), 2) interference proceedings, 3) secrecy orders, and 4) appellate review. Thus, that 3-year period given to the Office to issue a patent before an adjustment will accrue for "B delay" does not include any days used in the course of or any time consumed by clauses (i)-(ii), including any time consumed by the filing of a request for continued examination.

Fourth, "the term of the patent shall be extended 1 day for each day after the end of that 3-year period until the patent is issued" meaning that the consequence of this failure is that after "the end of that 3-year period" an additional 1 day of patent term will accrue for each day that the application is pending until the day the patent is issued.

---

[1] Clause (iii) provides for not including (iii) any delay in the processing of the application by the United States Patent and Trademark Office requested by the applicant except as permitted by paragraph (3)(C), the term of the patent shall be extended 1 day for each day after the end of that 3-year period until the patent is issued. It is noted that paragraph (3)(C) allows with an adequate showing by applicant for reinstatement of no more than 3 months of the patent term reduced for applicant delay in taking in excess of three months to respond.

The "time consumed by" or used in the course of the continued examination of the application requested by the applicant under section 132(b) does not end until issuance of the patent. 35 U.S.C. 132(b) was enacted under the same title, the "American Inventors Protection Act of 1999," as 35 U.S.C. 154(b). Section 4403 of the AIPA amended 35 U.S.C. § 132 to provide, at the request of the applicant, for continued examination of an application for a fee (request for continued examination or RCE practice), without requiring the applicant to file a continuing application under 37 CFR 1.53(b) or a continued prosecution application (CPA) under 37 CFR 1.53(d). Thus, clause (i) is different from clause (ii) in that clause (i) refers to an examination process whereas clause (ii) refers to time consumed by proceedings (interferences, secrecy orders and appeals) in an application.

By nature, the time used in the course of the examination process continues to issuance of the patent. The examination process involves examining the application to ascertain whether it appears that the applicant is entitled to a patent under the law. See 35 U.S.C. 131 ("[t]he Director shall cause an examination to be made of the application and the alleged new invention; and if on such examination it appears that the applicant is entitled to a patent under the law, the Director shall issue a patent therefor"). If on examination it appears that the applicant is entitled to a patent, the USPTO issues a notice of allowance. See 35 U.S.C. 151 ("[i]f it appears that applicant is entitled to a patent under the law, a written notice of allowance of the application shall be given or mailed to the applicant"). If on examination it appears that the applicant is not entitled to a patent, the USPTO issues a notice (an Office action) stating the applicable rejection, objection, or other requirement, with the reasons therefor. See 35 U.S.C. 132 ("[w]henever, on examination, any claim for a patent is rejected, or any objection or requirement made, the Director shall notify the applicant thereof, stating the reasons for such rejection, or objection or requirement, together with such information and references as may be useful in judging of the propriety of continuing the prosecution of his application"). Neither the issuance of a notice of allowance nor the insurance of an Office action terminates the examination process. If after the issuance of an Office action under 35 U.S.C. 132 it subsequently appears that the applicant is entitled to a patent (e.g., in response to an argument or amendment by the applicant), the USPTO will issue a notice of allowance. Conversely, if after the issuance of a notice of allowance under 35 U.S.C. 151 it subsequently appears that the applicant is not entitled to a patent (e.g., in response to information provided by the applicant or uncovered by the USPTO), the USPTO will withdraw the application from issuance and issue an Office action under 35 U.S.C. 132 stating the applicable rejection, objection, or other requirement, with the reasons therefor.

As held in Blacklight Power, the USPTO's responsibility to issue a patent containing only patentable claims does not end with the issuance of a notice of allowance under 35 U.S.C. 151. See BlackLight Power, Inc. v. Rogan, 295 F.3d 1269, 1273 (Fed. Cir. 2002). Rather, if there is any substantial, reasonable ground within the knowledge or cognizance of the Director as to why an application should not issue, it is the USPTO's duty to refuse to issue the patent even if a notice of allowance has previously been issued for the application. See In re Drawbaugh, 9 App. D.C. 219, 240 (D.C. Cir 1896).

Moreover, the applicant continues to be engaged in the examination process after the mailing of the notice of allowance. 37 CFR 1.56 makes clear that the applicant has a duty to disclose information material to patentability as long as the application is pending before the USPTO (i.e., until a patent is granted or the application is abandoned). See 37 CFR 1.56(a) ("[t]he duty to disclose information exists with respect to each pending claim until the claim is cancelled or withdrawn from consideration, or the application becomes abandoned"). 37 CFR 1.97 and 1.98 provide for the consideration of information submitted by the applicant after a notice of allowance has been mailed. See 37 CFR 1.97(d). In addition, 37 CFR 1.312 provides for the amendment of an application after a notice of allowance has been mailed. In fact, the request for examination procedures[2] permit the filing of a request for continued examination under 37 CFR 1.114 even after the issuance of a notice of allowance under 35 U.S.C. 151. See 37 CFR 1.114(a)(1).

As the examination process does not terminate with the mailing of the notice of allowance, the time consumed by continued examination requested by the applicant under section 132(b) does not terminate with the mailing of the notice of allowance. All the time the application is pending from the date of filing of the request for continued examination to the mailing of the notice of allowance through issuance of the patent is a consequence of the filing of the request for continued examination. Further action by the Office is pursuant to that request. Applicant has gotten further prosecution of the application without having to file a continuing application under 37 CFR 1.53(b).

All of the continued examination pursuant to the filing of the request by the applicant is properly excluded from the delay attributed to the Office. 35 U.S.C. 154(b)(1)(B)'s guarantee of a total application pendency of no more than three years provides for adjustment of the patent term for delay due to the Office's failure to issue the patent within three years, but does not include "any time consumed by continued examination requested by the applicant under 35 U.S.C. 132(b)." It is not necessary to mitigate the effect on the 20-year term to the extent that applicant has requested that the Office continue to examine the application via a request for continued examination, in lieu of, the filing of a continuing application under 37 CFR 1.53(b).

As the period from the filing date of the request for continued examination (RCE) to the issue date of the patent is not included in the "B" delay period, the over three year period begins on October 18, 2008, and ends on July 20, 2010, the day before the RCE, filed July 21, 2010, was filed, and is 500 days[3]. See, 35 U.S.C. 154(b)(1)(B)(i). As such, the patent term adjustment is 1321 days, not 1733 days, or 1610 days.

Nothing in this decision shall be construed as a waiver of the requirement of 35 U.S.C. 154(b)(4) that any civil action by an applicant dissatisfied with a determination made by the Director under 35 U.S.C. 154(b)(3) be filed in the United States District Court for the District of Columbia within 180 days after the grant of the patent.

---

[2] Thus, on occasion, even where a request for continued examination has already been filed and a notice of allowance issued pursuant to that request, applicant may file a further request for continued examination.

[3] This period also excludes 141 days excluded from B delay for appellate review.

The Office acknowledges submission of the $200.00 fee set forth in 37 CFR 1.18(e). No additional fees are required.

Telephone inquiries specific to this matter should be directed to the undersigned at (571) 272-3232.

/DLW/

Derek L. Woods/
Attorney
Office of Petitions

UNITED STATES PATENT AND TRADEMARK OFFICE

Commissioner for Patents
United States Patent and Trademark Office
P.O. Box 1450
Alexandria, VA 22313-1450
www.uspto.gov

JONATHAN RIGDON SMITH , P.C
1612 UNION ST
BRUNSWICK GA 31520-6733

MAILED
JAN 19 2011
OFFICE OF PETITIONS

In re Application of :
Williams :
Application No. 11/250,643 : DECISION
Filed/Deposited: 14 October, 2005 :
Attorney Docket No. (None) :

This is a decision on the petition filed 4 August, 2010, for revival of an application abandoned due to unintentional delay under 37 C.F.R. §1.137(b).

The pursuant to 37 C.F.R. §1.137(b) is **GRANTED**

As to the Allegations
of Unintentional Delay

The requirements of a grantable petition pursuant to 37 C.F.R. §1.137(b) are the petition and fee therefor, a reply, a proper statement of unintentional delay under the regulation, and, where applicable, a terminal disclaimer and fee.

BACKGROUND

The record reflects as follows:

Petitioner failed to reply timely and properly to the non-final Office action (Requirement for Restriction) mailed on 17 July, 2008, and (having been returned on 22 July, 2008, as undelivered) re-mailed on 21 August, 2008, with reply due absent extension of time on or before 21 September, 2008.

The application went abandoned by operation of law after midnight 21 September, 2008.

The Office mailed the Notice of Abandonment on 23 March, 2009.

On 28 April, 2009, Petitioner filed, *inter alia*, a petition pursuant to 37 C.F.R. §1.181 and an averment of non-receipt, but failed to comply with the requirements expressly set forth in the guidance in the Commentary at MPEP §711.03(c)(I) requiring: a copy of the Petitioner's/firm due-date docket/calendar and a copy of the docket sheet (or file jacket cover) for the instant application and; recitations as to a statement of non-receipt "at the correspondence address of record," a statement of search of the file and non-discovery, a description of the docketing system, a statement of system reliability, and such requirements as set forth in the guidance in the Commentary at MPEP 711.03(c)(I). The decision of 26 May, 2009, dismissing the 28 April, 2009, petition, noted that Petitioner had filed multiple papers changing the correspondence address of record from that set forth above, to "Mark Damon Williams, C/O J. And G. Williams, 113 Yorktown Drive, Brunswick, Ga 31525," to a third address of a post office box. At that time Petitioner was reminded that the Office will utilize only one correspondence address of record—and Petitioner should use Office forms (copy enclosed) for such changes of address that he deems appropriate. Petitioner was requested to review the requirements as set forth in the guidance in the Commentary at MPEP 711.03(c)(I), and then seek to satisfy those requirements. Alternatively, Petitioner was reminded that he might file a petition to revive pursuant to the regulations at 37 C.F.R. §1.137(b). (Form was enclosed.)

On 23 July, 2009, Petitioner re-advanced his earlier petition and Petitioner included documentation supporting the tender of the fee for a petition pursuant to 37 C.F.R. §1.137(b) to revive an application abandoned due to unintentional delay. (As indicated above, the requirements of the petition are the petition, the fee, the required reply, the statement/showing of unintentional delay, and, where appropriate, a terminal disclaimer and fee. The petition was dismissed on 14 September, 2009.

On 12 November, 2009, Petitioner resubmitted his petition pursuant to 37 C.F.R. §1.137(b), but again failed to file the required reply (an Election) to the Restriction Requirement of 21 August, 2008. The petition was dismissed on 15 March, 2010.

On 22 April, 2010, Petitioner/Counsel re-advanced the petition, but failed to file a reply—which was the earlier deficiency addressed on 15 March, 2010. Thus, Petitioner *pro se* previously submitted the petition and evidenced the fee, but Counsel has not submitted the required reply (the Election in reply to the Restriction Requirement mailed on 17 July, 2008 (a copy of which previously was enclosed). The petition was dismissed on 6 July, 2010.

On 4 August, 2010, Petitioner/Counsel re-advanced the petition (fee previously submitted), submitted a reply in the form of an election (with an amendment as well), and made the statement of unintentional delay.

Out of an abundance of caution, Petitioners always are reminded that the filing of a petition under 37 C.F.R. §1.181 does not toll any periods that may be running any action by the Office and a petition seeking relief under the regulation must be filed within two (2) months of the act complained of (*see*: 37 C.F.R. §1.181(f)), and those registered to practice and all others who

make representations before the Office are reminded to inquire into the underlying facts of representations made to the Office and support averments with the appropriate documentation– since all owe to the Office the continuing duty to disclose.[1]

The availability of applications and application papers online to applicants/practitioners who diligently associate their Customer Number with the respective application(s) now provides an applicant/practitioner on-demand information as to events/transactions in an application.

STATUTES, REGULATIONS

Congress has authorized the Commissioner to "revive an application if the delay is shown to the satisfaction of the Commissioner to have been "unavoidable." 35 U.S.C. §133 (1994). And the regulations at 37 C.F.R. §1.137(a) and (b) set forth the requirements for a Petitioner to revive a previously unavoidably or unintentionally, respectively, abandoned application.[2],[3]

Moreover, the Office has set forth in the Commentary at MPEP §711.03(c)(I) the showing and timeliness requirements for a proper showing for relief under 37 C.F.R. §1.181 in these matters.

Decisions on reviving abandoned applications on the basis of "unavoidable" delay have adopted the reasonably prudent person standard in determining if the delay was unavoidable:

> The word 'unavoidable' . . . is applicable to ordinary human affairs, and requires no more or greater care or diligence than is generally used and observed by prudent and careful men in relation to their most important business. It permits them in the exercise of this care to rely upon the ordinary and trustworthy agencies of mail and telegraph, worthy and reliable employees, and such other means and instrumentalities as are usually employed in such important business. If unexpectedly, or through the unforeseen fault or imperfection of these agencies

---

[1] See supplement of 17 June, 1999. The Patent and Trademark Office is relying on Petitioner's duty of candor and good faith and accepting a statement made by Petitioner. See Changes to Patent Practice and Procedure, 62 Fed. Reg. at 53160 and 53178, 1203 Off. Gaz. Pat. Office at 88 and 103 (responses to comments 64 and 109)(applicant obligated under 37 C.F.R. §10.18 to inquire into the underlying facts and circumstances when providing statements to the Patent and Trademark Office).

[2] See: Changes to Patent Practice and Procedure; Final Rule Notice, 62 Fed. Reg. at 53158-59 (October 10, 1997), 1203 Off. Gaz. Pat. Office at 86-87 (October 21, 1997).

[3] The language of 35 U.S.C. §133 and 37 C.F.R. §1.137(a) is clear, unambiguous, and without qualification: the delay in tendering the reply to the outstanding Office action, as well as filing the first petition seeking revival, must have been unavoidable for the reply now to be accepted on petition. (Therefore, by example, an unavoidable delay in the payment of the Filing Fee might occur if a reply is shipped by the US Postal Service, but due to catastrophic accident, the delivery is not made.) Delays in responding properly raise the question whether delays are unavoidable. Where there is a question whether the delay was unavoidable, Petitioners must meet the burden of establishing that the delay was unavoidable within the meaning of 35 U.S.C. §133 and 37 C.F.R. §1.137(a) And the Petitioner must be diligent in attending to the matter. Failure to do so does not constitute the care required under Pratt, and so cannot satisfy the test for diligence and due care. (By contrast, unintentional delays are those that do not satisfy the very strict statutory and regulatory requirements of unavoidable delay, and also, by definition, are not intentional.))

> and instrumentalities, there occurs a failure, it may properly be said to be unavoidable, all other conditions of promptness in its rectification being present.[4]

As to Allegations of
Unintentional Delay

The requirements of a grantable petition pursuant to 37 C.F.R. §1.137(b) are the petition and fee therefor, a reply, a proper statement of unintentional delay under the regulation, and, where applicable, a terminal disclaimer and fee.

It appears that the requirements under the rule have been satisfied.

CONCLUSION

Accordingly, the petition pursuant to 37 C.F.R. §1.137(b) is **granted**.

The instant application is released to Technology Center/AU 3728 for further processing in due course.

Petitioner may find it beneficial to view Private PAIR within a fortnight of the instant decision to ensure that the revival has been acknowledged by the TC/AU in response to this decision. It is noted that all inquiries with regard to status need be directed to the TC/AU where that change of status must be effected—that does not occur in the Office of Petitions.

[4] In re Mattullath, 38 App. D.C. 497, 514-15 (1912)(quoting Ex parte Pratt, 1887 Dec. Comm'r Pat. 31, 32-33 (1887)); see also Winkler v. Ladd, 221 F. Supp. 550, 552, 138 USPQ 666, 167-68 (D.D.C. 1963), aff'd, 143 USPQ 172 (D.C. Cir. 1963); Ex parte Henrich, 1913 Dec. Comm'r Pat. 139, 141 (1913). In addition, decisions on revival are made on a "case-by-case basis, taking all the facts and circumstances into account." Smith v. Mossinghoff, 671 F.2d 533, 538, 213 USPQ 977, 982 (D.C. Cir. 1982). Finally, a petition cannot be granted where a petitioner has failed to meet his or her burden of establishing that the delay was "unavoidable." Haines v. Quigg, 673 F. Supp. 314, 316-17, 5 USPQ2d 1130, 1131-32 (N.D. Ind. 1987).

Telephone inquiries regarding this decision may be directed to the undersigned at (571) 272-3214—it is noted, however, that all practice before the Office is in writing (see: 37 C.F.R. §1.2[5]) and the proper authority for action on any matter in this regard are the statutes (35 U.S.C.), regulations (37 C.F.R.) and the commentary on policy (MPEP). Therefore, no telephone discussion may be controlling or considered authority for Petitioner's action(s).

/John J. Gillon, Jr./
John J. Gillon, Jr.
Senior Attorney
Office of Petitions

---

[5] The regulations at 37 C.F.R. §1.2 provide:

§1.2 Business to be transacted in writing.

All business with the Patent and Trademark Office should be transacted in writing. The personal attendance of applicants or their attorneys or agents at the Patent and Trademark Office is unnecessary. The action of the Patent and Trademark Office will be based exclusively on the written record in the Office. No attention will be paid to any alleged oral promise, stipulation, or understanding in relation to which there is disagreement or doubt.

Doc Code: PET.AUTO Document Description: Petition automatically granted by EFS-Web	PTO/SB/64 U.S. Patent and Trademark Office Department of Commerce

Electronic Petition Request	**PETITION FOR REVIVAL OF AN APPLICATION FOR PATENT ABANDONED UNINTENTIONALLY UNDER 37 CFR 1.137(b)**
Application Number	11250643
Filing Date	14-Oct-2005
First Named Inventor	Mark Williams
Art Unit	3788
Examiner Name	ANDREW PERREAULT
Attorney Docket Number	WIL.0643
Title	Eyeglass carrier system

The above-identified application became abandoned for failure to file a timely and proper reply to a notice or action by the United States Patent and Trademark Office. The date of abandonment is the day after the expiration date of the period set for reply in the office notice or action plus any extensions of time actually obtained.

APPLICANT HEREBY PETITIONS FOR REVIVAL OF THIS APPLICATION

NOTE: A grantable petition requires the following items:
1. Petition fee;
2. Reply and/or issue fee;
3. Terminal disclaimer with disclaimer fee – required for all utility and plant applications filed before June 8, 1995; and for all design applications;
4. Statement that the entire delay was unintentional.

Petition fee
The petition fee under 37CFR 1.17(m) is attached.

☐ Applicant claims SMALL ENTITY status. See 37 CFR 1.27.

☐ Applicant is no longer claiming SMALL ENTITY status. See 37 CFR 1.27(g)(2).

☒ Applicant(s) status remains as SMALL ENTITY.

☐ Applicant(s) status remains as other than SMALL ENTITY.

Reply Fee

☒ A reply in the form of a continuing application with serial number 11250643 has been previously filed on 10-14-2005

Terminal disclaimer with disclaimer fee

☒ Terminal disclaimer and fee are not required

☐ I certify, in accordance with 37 CFR 1.4(d)(4) that the terminal disclaimer and fee have already been filed in the above-identified application on

☐ Terminal disclaimer and fee are attached

☒ STATEMENT: The entire delay in filing the required reply from the due date for the required reply until the filing of a grantable petition under 37 CFR 1.137(b) was unintentional.

THIS PORTION MUST BE COMPLETED BY THE SIGNATORY OR SIGNATORIES

I certify, in accordance with 37 CFR 1.4(d)(4) that I am:

○ An attorney or agent registered to practice before the Patent and Trademark Office who has been given power of attorney in this application.

◉ An attorney or agent registered to practice before the Patent and Trademark Office, acting in a representative capacity.

○ A sole inventor

○ A joint inventor; I certify that I am authorized to sign this submission on behalf of all of the inventors.

○ A joint inventor; all of whom are signing this e-petition.

○ The assignee of record of the entire interest that has properly made itself of record pursuant to 37 CFR 3.71.

Signature	/Jonathan R. Smith/
Name	Jonathan R. Smith
Registration Number	47098

UNITED STATES PATENT AND TRADEMARK OFFICE

Commissioner for Patents
United States Patent and Trademark Office
P.O. Box 1450
Alexandria, VA 22313-1450
www.uspto.gov

Decision Date : November 18,2011

In re Application of :

DECISION ON PETITION

Mark Williams

Application No : 11250643

Filed : 14-Oct-2005

Attorney Docket No : WIL.0643

This is an electronic decision on the petition under 37 CFR 1.137(b), filed November 18,2011, to revive the above-identified application .

The petition is **GRANTED.**

The above-identified application became abandoned for failure to reply in a timely manner to an Office action. The date of abandonment is the day after the expiration date of the period set for reply in the Office action or action plus any extensions of time actually obtained.

The electronic petition satisfies the requirements of 37 CFR 1.137(b) in that the practitioner has supplied (1) the reply in the form of a continuing application, (2) the petition fee under 37 CFR 1.17(m), and (3) a proper statement of unintentional delay.

The above-identified application is being revived solely for purposes of continuity. As continuity has been established by this decision reviving the above-identified application, the above-identified application is again abandoned in favor of continuing application No11250643 filed on 10-14-2005

It is not apparent whether the person signing the statement of unintentional delay was in a position to have firsthand or direct knowledge of the facts and circumstances of the delay at issue. Nevertheless, such statement is being treated as having been made as the result of a reasonable inquiry into the facts and circumstances of such delay. See 37 CFR 10.18(b) and Changes to Patent Practice and Procedure; Final Rule Notice, 62 Fed. Reg. 53131, 53178 (October 10, 1997), 1203 Off. Gaz. Pat. Office 63, 103 (October 21, 1997). In the event that such an inquiry has not been made, petitioner must make such an inquiry. If such inquiry results in the discovery that it is not correct that the entire delay in filing the required reply from the due date for the reply until the filing of a grantable petition pursuant to 37 CFR 1.137(b)
was unintentional, petitioner must notify the Office.

Telephone inquiries concerning this decision should be directed to the Patent Electronic Business Center (EBC) at 866-217-9197.

Office of Petitions

UNITED STATES PATENT AND TRADEMARK OFFICE

Commissioner for Patents
United States Patent and Trademark Office
P.O. Box 1450
Alexandria, VA 22313-1450
www.uspto.gov

WADDEY & PATTERSON, P.C.
1600 DIVISION STREET, SUITE 500
NASHVILLE TN 37203

MAILED
SEP 03 2010
OFFICE OF PETITIONS

In re Application of	:	
McMahon et al.	:	
Application No. 11/250,677	:	DECISION ON PETITION
Filed: October 14, 2005	:	
Attorney Docket No. 19400/09303	:	

This is a decision on the renewed petition under the unintentional provisions of 37 CFR 1.137(b), filed August 25, 2010, to revive the above-identified application.

The petition is **GRANTED**.

The application became abandoned for failure to reply in a proper and timely manner to the final Office action mailed, October 7, 2008, which set a shortened statutory period for reply of three (3) months. No extensions of time under the provisions of 37 CFR 1.136(a) were obtained. Accordingly, the application became abandoned on January 8, 2009. A Notice of Abandonment was mailed April 17, 2009.

The petition satisfies the requirements of 37 CFR 1.137(b) in that petitioner has supplied (1) the reply in the form of a Request for Continued Examination (RCE) and fee of $810.00 and the submission required by 37 CFR 1.114; (2) the petition fee of $1,620.00 (previously submitted May 11, 2010); and (3) a proper statement of unintentional delay.

Further, it is not apparent whether the statement of unintentional delay was signed by a person who would have been in a position of knowing that the **entire** delay in filing the required reply from the due date for the reply until the filing of a grantable petition pursuant to 37 CFR 1.137(b) was unintentional. Nevertheless, in accordance with 37 CFR 10.18, the statement is accepted as constituting a certification of unintentional delay. However, in the event that petitioner has no knowledge that the delay was unintentional, petitioner must make such an inquiry to ascertain that, in fact, the delay was unintentional. If petitioner discovers that the delay was intentional, petitioner must notify the Office.

Telephone inquiries concerning this decision should be directed to the undersigned at (571) 272-7751.

This matter is being referred to Technology Center AU 1657 for processing of the Request for Continued Examination under 37 CFR 1.114 and the Amendment filed with the instant petition.

Joan Olszewski

Joan Olszewski
Petitions Examiner
Office of Petitions

UNITED STATES PATENT AND TRADEMARK OFFICE

Commissioner for Patents
United States Patent and Trademark Office
P.O. Box 1450
Alexandria, VA 22313-1450
www.uspto.gov

NAVAL SURFACE WARFARE CENTER
OFFICE OF COUNSEL CODE C7
17932 DAHLGREN ROAD
SUITE 158
DAHLGREN VA 22448-5110

MAILED
MAR 11 2011
OFFICE OF PETITIONS

In re Application of	:	
Tony L. Buhr et al	:	
Application No. 11/250,691	:	DECISION ON PETITION
Filed: September 20, 2005	:	
Attorney Docket No. 95991	:	

This is a decision on the petition under the unintentional provisions of 37 CFR 1.137(b), filed December 7, 2010, to revive the above-identified application.

The petition is **GRANTED**.

The petition satisfies the conditions for revival pursuant to the provisions of 37 CFR 1.137(b) in that (1) the reply in the form of an Appeal Brief/fee; (2) the petition fee; and (3) the required statement of unintentional delay have been received. Accordingly, the reply received December 7, 2010, is accepted as having been unintentionally delayed.

An extension of time under 37 CFR 1.136 must be filed prior to the expiration of the maximum extendable period for reply. *See* In re Application of S., 8 USPQ2d 1630, 1631 (Comm'r Pats. 1988). Since the $2,350.00 extension of time fee submitted with the petition on December 7, 2010 was subsequent to the maximum extendable period for reply, this fee is unnecessary and will be credited to petitioner's deposit account as authorized.

Telephone inquiries concerning this decision should be directed to the undersigned at (571) 272-3208.

This application is being referred to Technology Center AU 1651 for appropriate action by the Examiner in the normal course of business.

/KOC/
Karen Creasy
Petitions Examiner
Office of Petitions

UNITED STATES PATENT AND TRADEMARK OFFICE

Commissioner for Patents
United States Patent and Trademark Office
P.O. Box 1450
Alexandria, VA 22313-1450
www.uspto.gov

NAVAL RESEARCH LABORATORY
ASSOCIATE COUNSEL (PATENTS)
CODE 1008.2
4555 OVERLOOK AVENUE, S.W.
WASHINGTON DC 20375-5320

MAILED
AUG 19 2010
OFFICE OF PETITIONS

In re Application of	:	
Bayya et al.	:	
Application No. 11/250,696	:	DECISION ON PETITION
Filed: October 13, 2005	:	
Attorney Docket No. 96,837	:	

This is a decision on the petition under the unintentional provisions of 37 CFR 1.137(b), filed July 2, 2010 and the Supplemental petition filed August 3, 2010, to revive the above-identified application.

The petition is **GRANTED**.

This application became abandoned for failure to reply in a proper and timely manner to the final Office action mailed October 2, 2009. A three-month extension of time under the provisions of 37 CFR 1.136(a) was timely obtained. Accordingly, this application became abandoned on April 3, 2010.

The petition satisfies the requirements of 37 CFR 1.137(b) in that petitioner has supplied (1) the reply in the form of a Request for Continued Examination (RCE) and fee of $810.00 and the submission required by 37 CFR 1.114 submitted August 3, 2010; (2) the petition fee of $1,620.00; and (3) a proper statement of unintentional delay.

Telephone inquiries concerning this decision should be directed to the undersigned at (571) 272-7751.

This matter is being referred to Technology Center 1783 for processing of the Request for Continued Examination under 37 CFR 1.114 and the Amendment filed with August 3, 2010.

Joan Olszewski
Petitions Examiner
Office of Petitions

PTO/SB/66 (03-09)
Approved for use through 03/31/2012. OMB 0651-0016
U.S. Patent and Trademark Office: U.S. DEPARTMENT OF COMMERCE
Under the Paperwork Reduction Act of 1995, no persons are required to respond to a collection of information unless it displays valid OMB control number.

PETITION TO ACCEPT UNINTENTIONALLY DELAYED PAYMENT OF MAINTENANCE FEE IN AN EXPIRED PATENT (37 CFR 1.378(c))

Patent Number	Issue Date (YYYY-MM-DD)	Application Number	Filing Date (YYYY-MM-DD)	Docket Number (if applicable)
7,199,704	2007-04-03	11/250,736	2005-10-14	0112-0001/US/2

CAUTION: Maintenance fee (and surcharge, if any) payment must correctly identify: (1) the patent number and (2) the application number of the actual U.S. application leading to issuance of that patent to ensure the fee(s) is/are associated with the correct patent. 37 CFR 1.366(c) and (d).

SMALL ENTITY
☒ Patentee claims, or has previously claimed, small entity status. See 37 CFR 1.27.

LOSS OF ENTITLEMENT TO SMALL ENTITY STATUS
☐ Patentee is no longer entitled to small entity status. See 37 CFR 1.27(g)

NOT Small Entity		Small Entity	
Fee	Code	Fee	Code
○ 3 ½ year	(1551)	● 3 ½ year	(2551)
○ 7 ½ year	(1552)	○ 7 ½ year	(2552)
○ 11 ½ year	(1553)	○ 11 ½ year	(2553)

SURCHARGE
The surcharge required by 37 CFR 1.20(i)(2) (Fee Code 1558) must be paid as a condition of accepting unintentionally delayed payment of the maintenance fee.

MAINTENANCE FEE (37 CFR 1.20(e)-(g))
The appropriate maintenance fee must be submitted with this petition.

STATEMENT
THE UNDERSIGNED CERTIFIES THAT THE DELAY IN PAYMENT OF THE MAINTENANCE FEE TO THIS PATENT WAS UNINTENTIONAL

PETITIONER(S) REQUEST THAT THE DELAYED PAYMENT OF THE MAINTENANCE FEE BE ACCEPTED AND THE PATENT REINSTATED

THIS PORTION MUST BE COMPLETED BY THE SIGNATORY OR SIGNATORIES

37 CFR 1.378(d) states: "Any petition under this section must be signed by an attorney or agent registered to practice before the Patent and Trademark Office, or by the patentee, the assignee, or other party in interest."

I certify, in accordance with 37 CFR 1.4(d)(4) that I am

- ● An attorney or agent registered to practice before the Patent and Trademark Office
- ○ A sole patentee
- ○ A joint patentee; I certify that I am authorized to sign this submission on behalf of all the other patentees.
- ○ A joint patentee; all of whom are signing this e-petition
- ○ The assignee of record of the entire interest

Under the Paperwork Reduction Act of 1995, no persons are required to respond to a collection of information unless it displays valid OMB control number.

Patent Practitioner			
A signature of the applicant or representative is required in accordance with 37 CFR 1.33 and 10.18. Please see 37 CFR 1.4(d) for the form of the signature			
Signature	/John J. Oskorep/	Date (YYYY-MM-DD)	2011-06-15
Name	John J. Oskorep, Esq.	Registration Number	41234

This collection of information is required by 37 CFR 1.378(c). The information is required to obtain or retain a benefit by the public which is to file (and by the USPTO to process) an application. Confidentiality is governed by 35 U.S.C. 122 and 37 CFR 1.11 and 1.14. This collection is estimated to take 1 hour to complete, including gathering, preparing, and submitting the completed application form to the USPTO. Time will vary depending upon the individual case. Any comments on the amount of time you require to complete this form and/ or suggestions for reducing this burden, should be sent to the Chief Information Officer, U.S. Patent and Trademark Office, U.S. Department of Commerce, P.O. Box 1450, Alexandria, VA 22313-1450. DO NOT SEND FEES OR COMPLETED FORMS TO THIS ADDRESS. **This form can only be used when in conjunction with EFS-Web. If this form is mailed to the USPTO, it may cause delays in reinstating the patent.**

Privacy Act Statement

The Privacy Act of 1974 (P.L. 93-579) requires that you be given certain information in connection with your submission of the attached form related to a patent application or patent. Accordingly, pursuant to the requirements of the Act, please be advised that: (1) the general authority for the collection of this information is 35 U.S.C. 2(b)(2); (2) furnishing of the information solicited is voluntary; and (3) the principal purpose for which the information is used by the U.S. Patent and Trademark Office is to process and/or examine your submission related to a patent application or patent. If you do not furnish the requested information, the U.S. Patent and Trademark Office may not be able to process and/or examine your submission, which may result in termination of proceedings or abandonment of the application or expiration of the patent.

The information provided by you in this form will be subject to the following routine uses:

1. The information on this form will be treated confidentially to the extent allowed under the Freedom of Information Act (5 U.S.C. 552) and the Privacy Act (5 U.S.C. 552a). Records from this system of records may be disclosed to the Department of Justice to determine whether the Freedom of Information Act requires disclosure of these records.

2. A record from this system of records may be disclosed, as a routine use, in the course of presenting evidence to a court, magistrate, or administrative tribunal, including disclosures to opposing counsel in the course of settlement negotiations.

3. A record in this system of records may be disclosed, as a routine use, to a Member of Congress submitting a request involving an individual, to whom the record pertains, when the individual has requested assistance from the Member with respect to the subject matter of the record.

4. A record in this system of records may be disclosed, as a routine use, to a contractor of the Agency having need for the information in order to perform a contract. Recipients of information shall be required to comply with the requirements of the Privacy Act of 1974, as amended, pursuant to 5 U.S.C. 552a(m).

5. A record related to an International Application filed under the Patent Cooperation Treaty in this system of records may be disclosed, as a routine use, to the International Bureau of the World Intellectual Property Organization, pursuant to the Patent Cooperation Treaty.

6. A record in this system of records may be disclosed, as a routine use, to another federal agency for purposes of National Security review (35 U.S.C. 181) and for review pursuant to the Atomic Energy Act (42 U.S.C. 218(c)).

7. A record from this system of records may be disclosed, as a routine use, to the Administrator, General Services, or his/her designee, during an inspection of records conducted by GSA as part of that agency's responsibility to recommend improvements in records management practices and programs, under authority of 44 U.S.C. 2904 and 2906. Such disclosure shall be made in accordance with the GSA regulations governing inspection of records for this purpose, and any other relevant (i.e., GSA or Commerce) directive. Such disclosure shall not be used to make determinations about individuals.

8. A record from this system of records may be disclosed, as a routine use, to the public after either publication of the application pursuant to 35 U.S.C. 122(b) or issuance of a patent pursuant to 35 U.S.C. 151. Further, a record may be disclosed, subject to the limitations of 37 CFR 1.14, as a routine use, to the public if the record was filed in an application which became abandoned or in which the proceedings were terminated and which application is referenced by either a published application, an application open to public inspections or an issued patent.

9. A record from this system of records may be disclosed, as a routine use, to a Federal, State, or local law enforcement agency, if the USPTO becomes aware of a violation or potential violation of law or regulation.

UNITED STATES PATENT AND TRADEMARK OFFICE

Commissioner for Patents
United States Patent and Trademark Office
P.O. Box 1450
Alexandria, VA 22313-1450
www.uspto.gov

In re Patent No.	7199704	:
Issue Date:	April 3,2007	
Application No.	11250736	:DECISION GRANTING PETITION
Filed:	October 14,2005	:UNDER 37 CFR 1.378(c)
Attorney Docket No.	0112-0001/US/2	:

This is a decision on the electronic petition, filed June 15,2011 ,under 37 CFR 1.378(c) to accept the unintentionally delayed payment of the 3.5 year maintenance fee for the above-identified patent.

The petition is **GRANTED**.

The maintenance fee is accepted, and the above-identified patent reinstated as of June 15,2011 .
This decision also constitutes notice that the fee has been accepted. An electronic copy of the petition and this decision has been created as an entry in the Image File Wrapper. Nevertheless, petitioner should print and retain an independent copy.

Telephone inquiries related to this electronic decision should be directed to the Electronic Business Center at 1-866-217-9197.

UNITED STATES PATENT AND TRADEMARK OFFICE

Commissioner for Patents
United States Patent and Trademark Office
P.O. Box 1450
Alexandria, VA 22313-1450
www.uspto.gov

Sadler, Breen, Morasch & Colby, ps
601 W. Main Ave.
Suite 1300
Spokane WA 99201

MAILED
DEC 03 2010
OFFICE OF PETITIONS

In re Application of :
George Yiachos :
Application No. 11/250739 : ON APPLICATION FOR
Filing or 371(c) Date: 10/14/2005 : PATENT TERM ADJUSTMENT
Atty Docket No.: :
YEOH0002 :

This is in response to the PETITION FOR RECONSIDERATION OF PATENT TERM ADJUSTMENT, filed August 27, 2010. Applicant requests that the Patent Term Adjustment be changed to reflect 1444 days, not 885 days as calculated by the Office as of the mailing of the initial determination of patent term adjustment. Applicant requests this correction solely on the basis that the Office will take in excess of three years to issue this patent. The application for patent term adjustment is properly treated under 37 C.F.R. § 1.705(b).

As the instant application for patent term adjustment requests reconsideration of the patent term adjustment as it relates to the Office's failure to issue the patent within 3 years of the filing date, the application for patent term adjustment under 37 CFR 1.705(b) is **DISMISSED as PREMATURE**.

Knowledge of the actual date the patent issues is required to calculate the amount, if any, of additional patent term patentee is entitled to for Office failure to issue the patent within 3 years. See § 1.702(b). (This is true even where a request for continued examination (RCE) was filed). The computer will not undertake the § 1.702(b) calculation until the actual date of issuance of the patent has been determined. Likewise, the computer will not calculate any further Office delay under § 1.702(a)(4) or applicant delay under § 1.704(c)(10) until the actual date of issuance of the patent has been determined. As such, the Office can not make a determination on the correctness of the patent term adjustment until the patent has issued.

Requesting reconsideration of the patent term adjustment to be indicated on the patent under 37 CFR 1.705(b) based on the initial determination of patent term adjustment and a projected issuance date of the patent (or even the filing date of the request for continued examination) is premature. Accordingly, it is appropriate to dismiss as premature such a request.

Rather than file an application for patent term adjustment under 37 CFR 1.705(b) contesting the 37 CFR 1.702(b) calculation at the time of the mailing of the notice of allowance, applicant is advised that they may wait until the time of the issuance of the patent and file a request for reconsideration of the patent term adjustment pursuant to 37 CFR 1.705(d). As the USPTO does not calculate the amount of time earned pursuant to 37 CFR 1.702(b) until the time of the issuance of the patent, the Office will consider any request for reconsideration of the patent term adjustment due to an error in the calculation of 37 CFR 1.702(b) to be timely if the request for reconsideration is filed within two months of the issuance of the patent. However, as to all other bases for contesting the initial determination of patent term adjustment received with the notice of allowance, applicant must timely file an application for patent term adjustment prior to the payment of the issue fee[1].

The Office acknowledges submission of the $200.00 fee set forth in 37 CFR 1.18(e) for consideration of the application for patent term adjustment under 37 CFR 1.705(b).

Any request for reconsideration of the patent term adjustment indicated on the patent must be timely filed within 2 months after issuance pursuant to 37 CFR 1.705(d) and ***must*** include payment of the required fee under 37 CFR 1.18(e).

The Office of Data Management has been advised of this decision. This application is being referred to the Office of Data Management for issuance of the patent.

Telephone inquiries specific to this decision should be directed to the undersigned at (571) 272-3232.

/DLW/

Derek L. Woods
Attorney
Office of Petitions

[1] For example, if applicant disputes both the calculation of patent term adjustment under 37 CFR 1.702(a)(1) for Office failure to mail a first Office action or notice of allowance not later than fourteen months after the date on which the application was filed and under 37 CFR 1.702(b) for Office failure to issue a patent within three years of the actual filing date of the application, then applicant must still timely file an application for patent term adjustment prior to the payment of the issue fee to contest the calculation of Office delay in issuing a first Office action or notice of allowance. See 37 CFR 1.705(b) and 35 U.S.C. 154(b)(3)(B). A dispute as to the calculation of the §1.702(a)(1) period raised on request for reconsideration of patent term adjustment under 37 CFR 1.705(d) will be dismissed as untimely filed.

UNITED STATES PATENT AND TRADEMARK OFFICE

Commissioner for Patents
United States Patent and Trademark Office
P.O. Box 1450
Alexandria, VA 22313-1450
www.uspto.gov

MCANDREWS HELD & MALLOY, LTD
500 WEST MADISON STREET
SUITE 3400
CHICAGO IL 60661

MAILED

DEC 02 2010

OFFICE OF PETITIONS

In re Application of	:	
Selvaggi et al.	:	
Application No. 11/250754	:	ON APPLICATION FOR
Filing or 371(c) Date: 10/14/2005	:	RECONSIDERATION OF
Atty Docket No.:	:	PATENT TERM ADJUSTMENT
20144US02	:	

This is in response to the APPLICATION FOR RECONSIDERATION OF THE DETERMINATION OF PATENT TERM ADJUSTMENT UNDER 35 U.S.C. 154(b) ACCOMPANYING THE NOTICE OF ALLOWANCE (37 CFR § 1.705), filed August 20, 2010. Applicant submits that the proper patent term adjustment to be indicated on the patent is 1119 days, not 335 days as calculated by the Office as of the mailing of the initial determination of patent term adjustment. Applicant requests this correction solely on the basis that the Office will take in excess of three years to issue this patent. The application for patent term adjustment is properly treated under 37 C.F.R. § 1.705(b).

As the instant application for patent term adjustment requests reconsideration of the patent term adjustment as it relates to the Office's failure to issue the patent within 3 years of the filing date, the application for patent term adjustment under 37 CFR 1.705(b) is **DISMISSED as PREMATURE**.

Knowledge of the actual date the patent issues is required to calculate the amount, if any, of additional patent term patentee is entitled to for Office failure to issue the patent within 3 years. See § 1.702(b). (This is true even where a request for continued examination (RCE) was filed). The computer will not undertake the § 1.702(b) calculation until the actual date of issuance of the patent has been determined. Likewise, the computer will not calculate any further Office delay under § 1.702(a)(4) or applicant delay under § 1.704(c)(10) until the actual date of issuance of the patent has been determined. As such, the Office can not make a determination on the correctness of the patent term adjustment until the patent has issued.

Requesting reconsideration of the patent term adjustment to be indicated on the patent under 37 CFR 1.705(b) based on the initial determination of patent term adjustment and a projected issuance date of the patent (or even the filing date of the request for continued examination) is premature. Accordingly, it is appropriate to dismiss as premature such a request.

Rather than file an application for patent term adjustment under 37 CFR 1.705(b) contesting the 37 CFR 1.702(b) calculation at the time of the mailing of the notice of allowance, applicant is advised that they may wait until the time of the issuance of the patent and file a request for reconsideration of the patent term adjustment pursuant to 37 CFR 1.705(d). As the USPTO does not calculate the amount of time earned pursuant to 37 CFR 1.702(b) until the time of the issuance of the patent, the Office will consider any request for reconsideration of the patent term adjustment due to an error in the calculation of 37 CFR 1.702(b) to be timely if the request for reconsideration is filed within two months of the issuance of the patent. However, as to all other bases for contesting the initial determination of patent term adjustment received with the notice of allowance, applicant must timely file an application for patent term adjustment prior to the payment of the issue fee[1].

The Office acknowledges submission of the $200.00 fee set forth in 37 CFR 1.18(e) for consideration of the application for patent term adjustment under 37 CFR 1.705(b).

Any request for reconsideration of the patent term adjustment indicated on the patent must be timely filed within 2 months after issuance pursuant to 37 CFR 1.705(d) and ***must*** include payment of the required fee under 37 CFR 1.18(e).

The Office of Data Management has been advised of this decision. This application is being referred to the Office of Data Management for issuance of the patent.

Telephone inquiries specific to this decision should be directed to the undersigned at (571) 272-3232.

/DLW/

Derek L. Woods
Attorney
Office of Petitions

---

[1] For example, if applicant disputes both the calculation of patent term adjustment under 37 CFR 1.702(a)(1) for Office failure to mail a first Office action or notice of allowance not later than fourteen months after the date on which the application was filed and under 37 CFR 1.702(b) for Office failure to issue a patent within three years of the actual filing date of the application, then applicant must still timely file an application for patent term adjustment prior to the payment of the issue fee to contest the calculation of Office delay in issuing a first Office action or notice of allowance. See 37 CFR 1.705(b) and 35 U.S.C. 154(b)(3)(B). A dispute as to the calculation of the §1.702(a)(1) period raised on request for reconsideration of patent term adjustment under 37 CFR 1.705(d) will be dismissed as untimely filed.

UNITED STATES PATENT AND TRADEMARK OFFICE

Commissioner for Patents
United States Patent and Trademark Office
P.O. Box 1450
Alexandria, VA 22313-1450
www.uspto.gov

MAILED

MAR 16 2011

OFFICE OF PETITIONS

ROPES & GRAY LLP
PATENT DOCKETING 39/361
1211 AVENUE OF THE AMERICAS
NEW YORK NY 10036-8704

In re Patent No. 7,820,877	:	
Issue Date: October 26, 2010	:	
Application No. 11/250,805	:	DECISION ON PETITION
Filed: October 14, 2005	:	
Attorney Docket No. 000659-0099-103	:	

This is a decision on the Request For Certificate Of Correction Under 37 C.F.R. §1.323, filed November 5, 2010, which is being treated as a petition under 37 CFR 3.81(b) to replace "Amgen Fremont Inc., Wilmington, DE (US)" with -- Amgen Fremont Inc., South San Francisco, CA (US) -- as the correct assignee's information to the Title Page of the Patent via a Certificate of Correction.

The petition under 37 CFR §3.81(b) is **DISMISSED**.

Petitioner, in effect, requests issuance of a Certificate of Correction to correct assignee's information from "Amgen Fremont Inc., Wilmington, DE (US)" to -- Amgen Fremont Inc., South San Francisco, CA (US) – on the previously submitted PTOL-85B and such error was the responsibility of the Patentee.

37 CFR 3.81(b), effective June 25, 2004, reads:

> *After payment of the issue fee:* Any request for issuance of an application in the name of the assignee submitted after the date of payment of the issue fee, and any request for a patent to be corrected to state the name of the assignee, must state that the assignment was submitted for recordation as set forth in § 3.11 **before issuance of the patent**, and must include a request for a certificate of correction under § 1.323 of this chapter (accompanied by the fee set forth in § 1.20(a) and the processing fee set forth in § 1.17(i) of this chapter [emphasis added]. *See also* MPEP 1481.01.

Section 1481.01, Correction of Assignees' Names, of the Manual of Patent Examining Procedures (MPEP) states, in part:

> "The Transmittal Form portion (PTOL-85B) of the Notice of Allowance Provides a space (item 3) for assignment data which should be completed in order to comply with 37 CFR 3.81. Unless an assignee's name and address are identified in the appropriate space for specifying the assignee, (i.e., item 3 of the Transmittal Form PTOL-85B), the patent will issue to the applicant. Assignment data printed on the patent will be based solely on the information so supplied.
>
> Any request for the issuance of an application in the name of the assignee submitted after the date of payment of the issue fee, and any request for a patent to be corrected to state the name of the assignee must:
>
> (A) state that the assignment was submitted for recordation as set forth in 37 CFR 3.11 before issuance of patent;
> (B) include a request for certificate of correction under 37 CFR 1.323 along with the fee set forth in 37 CFR 1.20(a); and
> (C) include the processing fee set forth in 37 CFR 1.17(i).
>
> See 37 CFR 3.81(b)."

A review of United States Patent and Trademark Office (USPTO) records reveals that the assignment documents were recorded at Reel: 024861, Frame: 0341 on August 19, 2010. A recordation cover sheet (Reel: 024861/Frame: 0341) identifies *Amgen Fremont Inc., Wilmington, Delaware* as the receiving party. However, the present petition requests that the assignee information be changed to *Amgen Fremont Inc., South San Francisco, CA*. A review of the Issue Fee Transmittal Form (PTOL-85B) reveals that the name of the assignee to be printed on the patent as "Amgen Fremont Inc., Wilmington, Delaware". Accordingly, the instant petition cannot be granted.

However, the requisite $130.00 processing fee (Fee Code 1464), as set forth under 37 CFR 1.17(h), was accompanied deposit account authorization to charge any required fees. As such, the fee has been charged as authorized.

Inquiries related this communication should be directed to the undersigned at (571) 272-3213.

Cheryl Gibson-Baylor

Cheryl Gibson-Baylor
Petitions Examiner
Office of Petitions

UNITED STATES PATENT AND TRADEMARK OFFICE

UNITED STATES DEPARTMENT OF COMMERCE
United States Patent and Trademark Office
Address: COMMISSIONER FOR PATENTS
P.O. Box 1450
Alexandria, Virginia 22313-1450
www.uspto.gov

APPLICATION NO.	FILING DATE	FIRST NAMED INVENTOR	ATTORNEY DOCKET NO.	CONFIRMATION NO.
11/250,850	10/14/2005	Josef Kallo	GP-305570	7941

65798 7590 09/15/2010
MILLER IP GROUP, PLC
GENERAL MOTORS CORPORATION
42690 WOODWARD AVENUE
SUITE 200
BLOOMFIELD HILLS, MI 48304

EXAMINER
HAN, KWANG S

ART UNIT	PAPER NUMBER
1795	

MAIL DATE	DELIVERY MODE
09/15/2010	PAPER

Please find below and/or attached an Office communication concerning this application or proceeding.

The time period for reply, if any, is set in the attached communication.

09/488,088

UNITED STATES PATENT AND TRADEMARK OFFICE

Commissioner for Patents
United States Patent and Trademark Office
P.O. Box 1450
Alexandria, VA 22313-1450
www.uspto.gov

SEP 15 2010

glm

In re application of	:	
Josef Kallo	:	DECISION
Serial No. 11/250,850	:	ON
Filed: October 14, 2005	:	PETITION
For: DEVICE TO CONTROL THE FLOW SPEED	:	
OF MEDIA THROUGH A FEUL CELL STACK	:	

This is a decision on the PETITION UNDER 37 CFR 1.181 filed on August 26, 2010.

A final rejection was mailed on July 14, 2010, followed by the instant petition on August 26, 2010. The petition requests that the finality of the July 14, 2010 action be withdrawn.

The petition is **GRANTED** for the reasons below.

DECISION

The action of July 14, 2010 included new grounds of rejection (not necessitated by amendment) based on art cited in an IDS filed March 17, 2010. The finality of the action was premised on MPEP 609.04(b), which states:

> The information submitted with a statement under 37 CFR 1.97(e) can be used in a new ground of rejection and the next Office action can be made final, if the new ground of rejection was necessitated by amendment of the application by applicant. Where the information is submitted during this period **with a fee** as set forth in 37 CFR 1.17(p), the examiner may use the information submitted, and make the next Office action final whether or not the claims have been amended, provided that no other new ground of rejection which was not necessitated by amendment to the claims is introduced by the examiner. See MPEP § 706.07(a).

However, as applicant has noted, the IDS was not filed with a fee, but rather with a certification statement under 37 CFR 1.97(e). Thus the finality of the July 14, 2010 action was premature.

Accordingly, the petition is ***granted***. The response filed September 1, 2010 will be entered as an amendment under 37 CFR 1.111 and forwarded to the examiner for due consideration.

/W. GARY JONES/
W. Gary Jones, Director
Technology Center 1700
Chemical and Materials Engineering

MILLER IP GROUP, PLC
GENERAL MOTORS CORPORATION
42690 WOODWARD AVENUE
SUITE 200
BLOOMFIELD HILLS MI 48304

SPE RESPONSE FOR CERTIFICATE OF CORRECTION

Paper No.:20100916

DATE : August 23, 2010

TO SPE OF : ART UNIT 1618

SUBJECT : Request for Certificate of Correction on Patent No.: 7635734

A response is requested with respect to the accompanying request for a certificate of correction.

Please complete this form and return with file, within **7** days to:
Certificates of Correction Branch - ST (South Tower) 9A22
Palm location **7590** - Tel. No. (703) 305-8309

With respect to the change(s) requested, correcting Office and/or Applicant's errors, should the patent read as shown in the certificate of correction? No new matter should be introduced, nor should the scope or meaning of the claims be changed.

Thank You For Your Assistance **Certificates of Correction Branch**

The request for issuing the above-identified correction(s) is hereby:

Note your decision on the appropriated box.

☒ **Approved** All changes apply.

☐ **Approved in Part** Specify below which changes **do not** apply.

☐ **Denied** State the reasons for denial below.

Comments:

/Michael G. Hartley/
SPE AU 1618

SPE RESPONSE FOR CERTIFICATE OF CORRECTION

Paper No.: _____

DATE : 10/8/09

TO SPE OF : ART UNIT 3724 Yu, Mickey (SPE)

SUBJECT : Request for Certificate of Correction for Appl. No.: 11/250911 Patent No.: 7472498

Please respond to this request for a certificate of correction within 7 days.

FOR IFW FILES:

Please review the requested changes/corrections as shown in the **COCIN** document(s) in the IFW application image. No new matter should be introduced, nor should the scope or meaning of the claims be changed.

Please complete the response (see below) and forward the completed response to scanning using document code **COCX**.

FOR PAPER FILES:

Please review the requested changes/corrections as shown in the attached certificate of correction. Please complete this form (see below) and forward it with the file to:

Certificates of Correction Branch (CofC)
Randolph Square – 9D10-A
Palm Location 7580

Certificates of Correction Branch
703-756-1571 _____

Thank You For Your Assistance

The request for issuing the above-identified correction(s) is hereby:
Note your decision on the appropriate box.

- ☒ **Approved** — All changes apply.
- ☐ **Approved in Part** — Specify below which changes **do not** apply.
- ☐ **Denied** — State the reasons for denial below.

Comments: _____

/Khoa D. Huynh/ — **SPE**

3765 — **Art Unit**

OK TO ENTER: /T.K./

(Also Form PTO-1050)

UNITED STATES PATENT AND TRADEMARK OFFICE

CERTIFICATE OF CORRECTION

PATENT NO. : **7,472,498 B2**
APPLICATION NO. : **11/250,911**
ISSUE DATE : **January 6, 2009**
INVENTOR(S) : **Richard M. Bryne**

It is certified that an error appears or errors appear in the above-identified patent and that said Letters Patent is hereby corrected as shown below:

Replacement Drawings (Attached)

Background of Invention

Column 1, Line 24 change "tightening" to "improper over-tightening"

OK TO ENTER: /T.K./

MAILING ADDRESS OF SENDER (Please do not use customer number below):

PATENT NO. 7,472,498

Darren M. Franklin, Esquire
Registration No.: 51701
Sheppard, Mullin, Richter & Hampton LLP
333 South Hope Street, 48th Floor
Los Angeles, CA 90071-1448

No. of additional copies

UNITED STATES PATENT AND TRADEMARK OFFICE

Commissioner for Patents
United States Patent and Trademark Office
P.O. Box 1450
Alexandria, VA 22313-1450
www.uspto.gov

SAP/BSTZ
BLAKELY SOKOLOFF TAYLOR & ZAFMAN LLP
1279 OAKMEAD PARKWAY
SUNNYVALE CA 94085-4040

MAILED
DEC 07 2010
OFFICE OF PETITIONS

In re Application of
Sheng Li et al. :
Application No. 11/250,965 : ON PETITION
Filed: October 14, 2005 :
Attorney Docket No: 6741P050 :

This is a decision on the petition under 37 CFR 1.137(a)[1], filed November 19, 2010, to revive the above identified application.

The petition is **GRANTED**.

This application became abandoned for failure to timely reply to the non-Final Office Action mailed March 1, 2010. A shortened statutory period of three months was set for replying to the non-Final Office Action. No response having been timely filed, this application became abandoned June 2, 2010. Accordingly, a Notice of Abandonment was mailed October 25, 2010.

Petitioner argues non-receipt of the non-Final Office Action and thus failure to file a timely reply was unavoidable.

Decisions on reviving abandoned applications on the basis of "unavoidable" delay have adopted the reasonably prudent person standard in determining if the delay was unavoidable:

> The word 'unavoidable' . . . is applicable to ordinary human affairs, and requires no more or greater care or diligence than is generally used and observed by prudent and careful men in relation to their most important business. It permits them in the exercise of this care to rely upon the ordinary and trustworthy agencies of mail and telegraph, worthy and reliable

---

[1]A grantable petition under 37 CFR 1.137(a) must be accompanied by:

(1) the required reply, unless previously filed; In a nonprovisional application abandoned for failure to prosecute, the required reply may be met by the filing of a continuing application. In a nonprovisional utility or plant application filed on or after June 8, 1995, and abandoned for failure to prosecute, the required reply may also be met by the filing of a request for continued examination in compliance with § 1.114. In an application or patent, abandoned or lapsed for failure to pay the issue fee or any portion thereof, the required reply must be the payment of the issue fee or any outstanding balance thereof.

(2) the petition fee as set forth in 37 CFR 1.17(l);

(3) a showing to the satisfaction of the Commissioner that the entire delay in filing the required reply from the due date for the reply until the filing of a grantable petition pursuant to 37 CFR 1.137(a) was unavoidable; and

(4) any terminal disclaimer (and fee as set forth in 37 CFR 1.20(d)) required pursuant to 37 CFR 1.137(c)).

> employees, and such other means and instrumentalities as are usually employed in such important business. If unexpectedly, or through the unforeseen fault or imperfection of these agencies and instrumentalities, there occurs a failure, it may properly be said to be unavoidable, all other conditions of promptness in its rectification being present.[2]

Specifically, an application is "unavoidably" abandoned only where petitioner, or counsel for petitioner, takes all action necessary for a proper response to the outstanding Office action, but through the intervention of unforeseen circumstances, such as failure or mail, telegraph, telefacsimile, or the negligence of otherwise reliable employees, the response is not timely received in the Office.[3]

A review of the file record discloses that the non-Final Office Action was mailed to the address of record. However, petitioner contends that it was not received. In support of this contention, copies of pages from the docket wherein receipt of the March 1, 2010 Office Action would have been entered, had it been received, accompanied the petition. The submissions provided, corroborate non-receipt of the non-Final Office Action mailed March 1, 2010. In view of the facts set forth in the petition, it was concluded that the non-Final Office Action mailed March 1, 2010 was never received.

Additionally, a review of the record reveals that a three month extension of time was filed November 19, 2010, however, pursuant to 37 CFR 1.136, an extension of time must be filed prior to the expiration of the maximum period obtainable for reply to avoid abandonment. Accordingly, since the $1110.00 extension of time fee submitted with the petition on November 19, 2010, was subsequent to the maximum period obtainable for reply, this fee is unnecessary and will be credited back to deposit account no. 02-2666.

All other requirements of 37 CFR 1.137(a)having now been met, this matter is being referred to Technology Center 3624 for appropriate action on the amendment filed November 19, 2010.

Telephone inquiries concerning this matter may be directed to the undersigned Petitions Attorney at (571) 272-3212.

Patricia Faison-Ball

Patricia Faison-Ball
Senior Petitions Attorney
Office of Petitions

---

[2] In re Mattullath, 38 App. D.C. 497, 514-15 (1912)(quoting Ex parte Pratt, 1887 Dec. Comm'r Pat. 31, 32-33 (1887)); see also Winkler v. Ladd, 221 F. Supp. 550, 552, 138 USPQ 666, 167-68 (D.D.C. 1963), aff'd, 143 USPQ 172 (D.C. Cir. 1963); Ex parte Henrich, 1913 Dec. Comm'r Pat. 139, 141 (1913). In addition, decisions on revival are made on a "case-by-case basis, taking all the facts and circumstances into account." Smith v. Mossinghoff, 671 F.2d 533, 538, 213 USPQ 977, 982 (D.C. Cir. 1982). Finally, a petition cannot be granted where a petitioner has failed to meet his or her burden of establishing that the delay was "unavoidable." Haines v. Quigg, 673 F. Supp. 314, 316-17, 5 USPQ2d 1130, 1131-32 (N.D. Ind. 1987).

[3] Ex parte Pratt, 1887 Dec. Comm'r Pat. 31 (Comm'r Pat. 1887).

UNITED STATES PATENT AND TRADEMARK OFFICE

Commissioner for Patents
United States Patent and Trademark Office
P.O. Box 1450
Alexandria, VA 22313-1450
www.uspto.gov

SMYRSKI LAW GROUP,
A PROFESSIONAL CORPORATION
3310 AIRPORT AVENUE, SW
SANTA MONICA, CA 90405

MAILED

AUG 10 2010

OFFICE OF PETITIONS

In re Application of
Dung Ma, et al.
Application No. 11/250,984
Filed: October 13, 2005
Attorney Docket No. AMO0025

DECISION ON PETITION
UNDER 37 CFR 1.137(b)

This is a decision on the petition, filed July 1, 2010, which is being treated as a petition under 37 CFR 1.137(b) to revive the instant nonprovisional application for failure to timely notify the U.S. Patent and Trademark (USPTO) of the filing of an application in a foreign country, or under a multinational treaty that requires publication of applications eighteen months after filing. *See* 37 CFR 1.137(f).

The petition is **GRANTED**.

Petitioner states that the instant nonprovisional application is the subject of an application filed in an eighteen-month publication country on October 12, 2006. However, the USPTO was unintentionally not notified of this filing within 45 days subsequent to the filing of the subject application in an eighteen-month publication country.

In view of the above, this application became abandoned pursuant to 35 U.S.C. § 122(b)(2)(B)(iii) and 37 CFR 1.213(c) for failure to timely notify the Office of the filing of an application in a foreign country or under a multilateral international agreement that requires publication of applications 18 months after filing.

A petition to revive an application abandoned pursuant to 35 U.S.C. 122(b)(2)(B)(iii) for failure to notify the USPTO of a foreign filing must be accompanied by:

(1) the required reply which is met by the notification of such filing in a foreign country or under a multinational treaty;
(2) the petition fee as set forth in 37 CFR 1.17(m); and
(3) a statement that the entire delay in filing the required reply from the due date of the reply until the filing of a grantable petition was unintentional.

The instant petition has been found to be in compliance with 37 CFR 1.137(b). Accordingly, the failure to timely notify the USPTO of a foreign or international filing within 45 days after the date of filing of such foreign or international application as provided by 35 U.S.C. § 122(b)(2)(B)(iii) and 37 CFR 1.213(c) is accepted as having been unintentionally delayed.

The previous Request and Certification under 35 U.S.C. § 122(b)(2)(B)(i) has been rescinded. A Notice Regarding Rescission of Nonpublication Request which sets forth the projected publication date of November 11, 2010 accompanies this decision on petition.

Telephone inquiries concerning this decision should be directed to April M. Wise at (571) 272-1642. All other inquiries concerning the examination of this application should be directed to the Technology Center.

This application is being referred back to Technology Center Art Unit 2618 for examination in due course.

/Carl Friedman/
Carl Friedman
Petitions Examiner
Office of Petitions

ATTACHMENT: Notice Regarding Rescission of Nonpublication Request

UNITED STATES PATENT AND TRADEMARK OFFICE

UNITED STATES DEPARTMENT OF COMMERCE
United States Patent and Trademark Office
Address: COMMISSIONER FOR PATENTS
P.O. Box 1450
Alexandria, Virginia 22313-1450
www.uspto.gov

APPLICATION NUMBER	FILING OR 371(C) DATE	FIRST NAMED APPLICANT	ATTY. DOCKET NO./TITLE
11/250,984	10/13/2005	Dung Ma	AMO0025

CONFIRMATION NO. 6365

NONPUBLICATION RESCISSION LETTER

30438
SMYRSKI LAW GROUP, A PROFESSIONAL CORPORATION
3310 AIRPORT AVENUE, SW
SANTA MONICA, CA 90405

OC000000042937436

Date Mailed: 08/09/2010

Communication Regarding Rescission Of Nonpublication Request and/or Notice of Foreign Filing

Applicant's rescission of the previously-filed nonpublication request and/or notice of foreign filing is acknowledged. The paper has been reflected in the Patent and Trademark Office's (USPTO's) computer records so that the earliest possible projected publication date can be assigned.

The projected publication date is 11/11/2010.

If applicant rescinded the nonpublication request before or on the date of "foreign filing,"[1] then no notice of foreign filing is required.

If applicant foreign filed the application after filing the above application and before filing the rescission, and the rescission did not also include a notice of foreign filing, then a notice of foreign filing (not merely a rescission) is required to be filed within 45 days of the date of foreign filing. See 35 U.S.C. § 122(b)(2)(B)(iii), and Clarification of the United States Patent and Trademark Office's Interpretation of the Provisions of 35 U.S.C. § 122(b)(2)(B)(ii)-(iv), 1272 Off. Gaz. Pat. Office 22 (July 1, 2003).

If a notice of foreign filing is required and is not filed within 45 days of the date of foreign filing, then the application becomes abandoned pursuant to 35 U.S.C. § 122(b)(2)(B)(iii). In this situation, applicant should either file a petition to revive or notify the Office that the application is abandoned. See 37 CFR 1.137(f). Any such petition to revive will be forwarded to the Office of Petitions for a decision. Note that the filing of the petition will not operate to stay any period of reply that may be running against the application.

Questions regarding petitions to revive should be directed to the Office of Petitions at (571) 272-3282.

[1] Note, for purpose of this notice, that "foreign filing" means "filing an application directed to the same invention in another country, or under a multilateral international agreement, that requires publication of applications 18 months after filing".

/amwise/

Office of Data Management, Application Assistance Unit (571) 272-4000, or (571) 272-4200, or 1-888-786-0101

PTO/SB/66 (03-09)
Approved for use through 03/31/2012. OMB 0651-0016
U.S. Patent and Trademark Office: U.S. DEPARTMENT OF COMMERCE
Under the Paperwork Reduction Act of 1995, no persons are required to respond to a collection of information unless it displays valid OMB control number.

PETITION TO ACCEPT UNINTENTIONALLY DELAYED PAYMENT OF MAINTENANCE FEE IN AN EXPIRED PATENT (37 CFR 1.378(c))

Patent Number	Issue Date (YYYY-MM-DD)	Application Number	Filing Date (YYYY-MM-DD)	Docket Number (if applicable)
7140195	2006-11-28	11250998	2005-10-14	

CAUTION: Maintenance fee (and surcharge, if any) payment must correctly identify: (1) the patent number and (2) the application number of the actual U.S. application leading to issuance of that patent to ensure the fee(s) is/are associated with the correct patent. 37 CFR 1.366(c) and (d).

SMALL ENTITY
☒ Patentee claims, or has previously claimed, small entity status. See 37 CFR 1.27.

LOSS OF ENTITLEMENT TO SMALL ENTITY STATUS
☐ Patentee is no longer entitled to small entity status. See 37 CFR 1.27(g)

NOT Small Entity		Small Entity	
Fee	Code	Fee	Code
○ 3 ½ year	(1551)	● 3 ½ year	(2551)
○ 7 ½ year	(1552)	○ 7 ½ year	(2552)
○ 11 ½ year	(1553)	○ 11 ½ year	(2553)

SURCHARGE
The surcharge required by 37 CFR 1.20(i)(2) (Fee Code 1558) must be paid as a condition of accepting unintentionally delayed payment of the maintenance fee.

MAINTENANCE FEE (37 CFR 1.20(e)-(g))
The appropriate maintenance fee must be submitted with this petition.

STATEMENT
THE UNDERSIGNED CERTIFIES THAT THE DELAY IN PAYMENT OF THE MAINTENANCE FEE TO THIS PATENT WAS UNINTENTIONAL

PETITIONER(S) REQUEST THAT THE DELAYED PAYMENT OF THE MAINTENANCE FEE BE ACCEPTED AND THE PATENT REINSTATED

THIS PORTION MUST BE COMPLETED BY THE SIGNATORY OR SIGNATORIES

37 CFR 1.378(d) states: "Any petition under this section must be signed by an attorney or agent registered to practice before the Patent and Trademark Office, or by the patentee, the assignee, or other party in interest."

I certify, in accordance with 37 CFR 1.4(d)(4) that I am

○ An attorney or agent registered to practice before the Patent and Trademark Office

○ A sole patentee

○ A joint patentee; I certify that I am authorized to sign this submission on behalf of all the other patentees.

○ A joint patentee; all of whom are signing this e-petition

● The assignee of record of the entire interest

Under the Paperwork Reduction Act of 1995, no persons are required to respond to a collection of information unless it displays valid OMB control number.

The Assignee of record of the entire interest			
Under 37 CFR 3.71 an assignee becomes of record by filing a statement in compliance with 37 CFR 3.73(b). Signature requirements are set forth in 37 CFR 1.4(d), and the undersigned certifies that he / she is empowered to act on behalf of the assignee of the entire interest			
Signature	/Art Consoli/	Date (YYYY-MM-DD)	2012-01-27
Name	Art Consoli		
Enter Reel and Frame Number		Remove	
Reel Number	024953	Frame Number	0082
Click ADD for additional Reel Number and Frame Number		Add	

This collection of information is required by 37 CFR 1.378(c). The information is required to obtain or retain a benefit by the public which is to file (and by the USPTO to process) an application. Confidentiality is governed by 35 U.S.C. 122 and 37 CFR 1.11 and 1.14. This collection is estimated to take 1 hour to complete, including gathering, preparing, and submitting the completed application form to the USPTO. Time will vary depending upon the individual case. Any comments on the amount of time you require to complete this form and/ or suggestions for reducing this burden, should be sent to the Chief Information Officer, U.S. Patent and Trademark Office, U.S. Department of Commerce, P.O. Box 1450, Alexandria, VA 22313-1450. DO NOT SEND FEES OR COMPLETED FORMS TO THIS ADDRESS. **This form can only be used when in conjunction with EFS-Web. If this form is mailed to the USPTO, it may cause delays in reinstating the patent.**

Privacy Act Statement

The Privacy Act of 1974 (P.L. 93-579) requires that you be given certain information in connection with your submission of the attached form related to a patent application or patent. Accordingly, pursuant to the requirements of the Act, please be advised that: (1) the general authority for the collection of this information is 35 U.S.C. 2(b)(2); (2) furnishing of the information solicited is voluntary; and (3) the principal purpose for which the information is used by the U.S. Patent and Trademark Office is to process and/or examine your submission related to a patent application or patent. If you do not furnish the requested information, the U.S. Patent and Trademark Office may not be able to process and/or examine your submission, which may result in termination of proceedings or abandonment of the application or expiration of the patent.

The information provided by you in this form will be subject to the following routine uses:

1. The information on this form will be treated confidentially to the extent allowed under the Freedom of Information Act (5 U.S.C. 552) and the Privacy Act (5 U.S.C. 552a). Records from this system of records may be disclosed to the Department of Justice to determine whether the Freedom of Information Act requires disclosure of these records.

2. A record from this system of records may be disclosed, as a routine use, in the course of presenting evidence to a court, magistrate, or administrative tribunal, including disclosures to opposing counsel in the course of settlement negotiations.

3. A record in this system of records may be disclosed, as a routine use, to a Member of Congress submitting a request involving an individual, to whom the record pertains, when the individual has requested assistance from the Member with respect to the subject matter of the record.

4. A record in this system of records may be disclosed, as a routine use, to a contractor of the Agency having need for the information in order to perform a contract. Recipients of information shall be required to comply with the requirements of the Privacy Act of 1974, as amended, pursuant to 5 U.S.C. 552a(m).

5. A record related to an International Application filed under the Patent Cooperation Treaty in this system of records may be disclosed, as a routine use, to the International Bureau of the World Intellectual Property Organization, pursuant to the Patent Cooperation Treaty.

6. A record in this system of records may be disclosed, as a routine use, to another federal agency for purposes of National Security review (35 U.S.C. 181) and for review pursuant to the Atomic Energy Act (42 U.S.C. 218(c)).

7. A record from this system of records may be disclosed, as a routine use, to the Administrator, General Services, or his/her designee, during an inspection of records conducted by GSA as part of that agency's responsibility to recommend improvements in records management practices and programs, under authority of 44 U.S.C. 2904 and 2906. Such disclosure shall be made in accordance with the GSA regulations governing inspection of records for this purpose, and any other relevant (i.e., GSA or Commerce) directive. Such disclosure shall not be used to make determinations about individuals.

8. A record from this system of records may be disclosed, as a routine use, to the public after either publication of the application pursuant to 35 U.S.C. 122(b) or issuance of a patent pursuant to 35 U.S.C. 151. Further, a record may be disclosed, subject to the limitations of 37 CFR 1.14, as a routine use, to the public if the record was filed in an application which became abandoned or in which the proceedings were terminated and which application is referenced by either a published application, an application open to public inspections or an issued patent.

9. A record from this system of records may be disclosed, as a routine use, to a Federal, State, or local law enforcement agency, if the USPTO becomes aware of a violation or potential violation of law or regulation.

UNITED STATES PATENT AND TRADEMARK OFFICE

Commissioner for Patents
United States Patent and Trademark Office
P.O. Box 1450
Alexandria, VA 22313-1450
www.uspto.gov

In re Patent No. 7140195
Issue Date: November 28,2006
Application No. 11250998
Filed: October 14,2005
Attorney Docket No. 4360-A2

:
:DECISION GRANTING PETITION
:UNDER 37 CFR 1.378(c)
:

This is a decision on the electronic petition, filed January 27,2012 ,under 37 CFR 1.378(c) to accept the unintentionally delayed payment of the 3.5 year maintenance fee for the above-identified patent.

The petition is **GRANTED**.

The maintenance fee is accepted, and the above-identified patent reinstated as of January 27,2012 . This decision also constitutes notice that the fee has been accepted. An electronic copy of the petition and this decision has been created as an entry in the Image File Wrapper. Nevertheless, petitioner should print and retain an independent copy.

Telephone inquiries related to this electronic decision should be directed to the Electronic Business Center at 1-866-217-9197.

SPE RESPONSE FOR CERTIFICATE OF CORRECTION

Paper No.: _____

DATE : 04/29/10

TO SPE OF : ART UNIT 3679

SUBJECT : Request for Certificate of Correction for Appl. No.: 11251036 Patent No.: 7506859

Please respond to this request for a certificate of correction within 7 days.

FOR IFW FILES:

Please review the requested changes/corrections as shown in the **COCIN** document(s) in the IFW application image. No new matter should be introduced, nor should the scope or meaning of the claims be changed.

Please complete the response (see below) and forward the completed response to scanning using document code **COCX**.

FOR PAPER FILES:

Please review the requested changes/corrections as shown in the attached certificate of correction. Please complete this form (see below) and forward it with the file to:

Certificates of Correction Branch (C of C)
Randolph Square 9D40-D
Palm Location 7580

You can fax the Directors/SPE response to 571-270-9990

Lamonte Newsome
Certificates of Correction Branch
703-756-1574

Thank You For Your Assistance

The request for issuing the above-identified correction(s) is hereby:
Note your decision on the appropriate box.

xxx☒ **Approved** — **All** changes apply.

☐ **Approved in Part** — Specify below which changes **do not** apply.

☐ **Denied** — State the reasons for denial below.

Comments: The identified changes to Columns 7 & 8 are acceptable with regard to content. However, the change to Column 7 does not correctly identify the line location for the change. In particular, the location should be Column 7, lines 25-26, by actual line count.

/Daniel P. Stodola/
SPE

3679
Art Unit

SPE RESPONSE FOR CERTIFICATE OF CORRECTION

Paper No.: _____

DATE : 04/29/10

TO SPE OF : ART UNIT 3679

SUBJECT : Request for Certificate of Correction for Appl. No.: 11251036 Patent No.: 7506859

Please respond to this request for a certificate of correction within 7 days.

FOR IFW FILES:

Please review the requested changes/corrections as shown in the **COCIN** document(s) in the IFW application image. No new matter should be introduced, nor should the scope or meaning of the claims be changed.

Please complete the response (see below) and forward the completed response to scanning using document code **COCX**.

FOR PAPER FILES:

Please review the requested changes/corrections as shown in the attached certificate of correction. Please complete this form (see below) and forward it with the file to:

Certificates of Correction Branch (C of C)
Randolph Square 9D40-D
Palm Location 7580

You can fax the Director's SPE response to 571-270-9990

Lamonte Newsome
Certificates of Correction Branch
703-756-1574

Thank You For Your Assistance

The request for issuing the above-identified correction(s) is hereby:
Note your decision on the appropriate box.

xx☒x **Approved** — **All** changes apply.

☐ **Approved in Part** — Specify below which changes **do not** apply.

☐ **Denied** — State the reasons for denial below.

Comments: The identified changes to Columns 7 & 8 are acceptable with regard to content. However, the change to Column 7 does not correctly identify the line location for the change. In particular, the location should be Column 7, lines 25-26, by actual line count.

/Daniel P. Stodola/.
SPE

3679
Art Unit

SPE RESPONSE FOR CERTIFICATE OF CORRECTION

Paper No.:20110504

DATE : May 04, 2011

TO SPE OF : ART UNIT 1642

SUBJECT : Request for Certificate of Correction on Patent No.: 7,491,390

A response is requested with respect to the accompanying request for a certificate of correction.

Please complete this form and return with file, within **7** days to:
Certificates of Correction Branch - ST (South Tower) 9A22
Palm location **7590** - Tel. No. (703) 305-8309

With respect to the change(s) requested, correcting Office and/or Applicant's errors, should the patent read as shown in the certificate of correction? No new matter should be introduced, nor should the scope or meaning of the claims be changed.

Thank You For Your Assistance **Certificates of Correction Branch**

The request for issuing the above-identified correction(s) is hereby:

Note your decision on the appropriated box.

☒ **Approved** All changes apply.

☐ **Approved in Part** Specify below which changes **do not** apply.

☐ **Denied** State the reasons for denial below.

Comments:

/MISOOK YU/
Supervisory Patent Examiner.Art Unit 1642

UNITED STATES PATENT AND TRADEMARK OFFICE

Commissioner for Patents
United States Patent and Trademark Office
P.O. Box 1450
Alexandria, VA 22313-1450
www.uspto.gov

Decision Date : April 5,2011

In re Application of :

Glen Axelrod

DECISION ON PETITION

UNDER CFR 1.313(c)(2)

Application No : 11251261

Filed : 14-Oct-2005

Attorney Docket No : TFH085CIP

This is an electronic decision on the petition under 37 CFR 1.313(c)(2), filed April 5,2011 , to withdraw the above-identified application from issue after payment of the issue fee.

The petition is **GRANTED.**

The above-identified application is withdrawn from issue for consideration of a submission under 37 CFR 1.114 (request for continued examination). See 37 CFR 1.313(c)(2).

Petitioner is advised that the issue fee paid in this application cannot be refunded. If, however, this application is again allowed, petitioner may request that it be applied towards the issue fee required by the new Notice of Allowance.

Telephone inquiries concerning this decision should be directed to the Patent Electronic Business Center (EBC) at 866-217-9197.

This application file is being referred to Technology Center AU 1782 for processing of the request for continuing examination under 37 CFR 1.114 .

Office of Petitions

Doc Code: PET.AUTO Document Description: Petition automatically granted by EFS-Web	PTO/SB/140 U.S. Patent and Trademark Office Department of Commerce

Electronic Petition Request	**PETITION TO WITHDRAW AN APPLICATION FROM ISSUE AFTER PAYMENT OF THE ISSUE FEE UNDER 37 CFR 1.313(c)**
Application Number	11251261
Filing Date	14-Oct-2005
First Named Inventor	Glen Axelrod
Art Unit	1782
Examiner Name	DREW BECKER
Attorney Docket Number	TFH085CIP
Title	DIRECT MELT PROCESSING OF RESINS

An application may be withdrawn from issue for further action upon petition by the applicant. To request that the Office withdraw an application from issue, applicant must file a petition under this section including the fee set forth in § 1.17(h) and a showing of good and sufficient reasons why withdrawal of the application from issue is necessary.

APPLICANT HEREBY PETITIONS TO WITHDRAW THIS APPLICATION FROM ISSUE UNDER 37 CFR 1.313(c).

A grantable petition requires the following items:
(1) Petition fee; and
(2) One of the following reasons:
(a) Unpatentability of one or more claims, which must be accompanied by an unequivocal statement that one or more claims are unpatentable, an amendment to such claim or claims, and an explanation as to how the amendment causes such claim or claims to be patentable;
(b) Consideration of a request for continued examination in compliance with § 1.114 (for a utility or plant application only); or
(c) Express abandonment of the application. Such express abandonment may be in favor of a continuing application, but not a CPA under 37 CFR 1.53(d).

Petition Fee

- ☐ Applicant claims SMALL ENTITY status. See 37 CFR 1.27.
- ☐ Applicant is no longer claiming SMALL ENTITY status. See 37 CFR 1.27(g)(2).
- ☐ Applicant(s) status remains as SMALL ENTITY.
- ☒ Applicant(s) status remains as other than SMALL ENTITY

Reason for withdrawal from issue

○ One or more claims are unpatentable

◉ Consideration of a request for continued examination (RCE) (List of Required Documents and Fees)

○ Applicant hereby expressly abandons the instant application (any attorney/agent signing for this reason must have power of attorney pursuant to 37 CFR 1.32(b)).

RCE request,submission, and fee.

☒ I certify, in accordance with 37 CFR 1.4(d)(4) that : The RCE request ,submission, and fee have already been filed in the above-identified application on 2011.03.30

☐ Are attached.

THIS PORTION MUST BE COMPLETED BY THE SIGNATORY OR SIGNATORIES

I certify, in accordance with 37 CFR 1.4(d)(4) that I am:

◉ An attorney or agent registered to practice before the Patent and Trademark Office who has been given power of attorney in this application.

○ An attorney or agent registered to practice before the Patent and Trademark Office, acting in a representative capacity.

○ A sole inventor

○ A joint inventor; I certify that I am authorized to sign this submission on behalf of all of the inventors

○ A joint inventor; all of whom are signing this e-petition

○ The assignee of record of the entire interest that has properly made itself of record pursuant to 37 CFR 3.71

Signature	/Steven J. Grossman/
Name	Steven J. Grossman
Registration Number	35001

UNITED STATES PATENT AND TRADEMARK OFFICE

Commissioner for Patents
United States Patent and Trademark Office
P.O. Box 1450
Alexandria, VA 22313-1450
www.uspto.gov

Weaver Austin Villeneuve & Sampson LLP - NOVL
Attn.: Novellus Systems, Inc.
P.O. Box 70250
Oakland CA 94612-0250

MAILED

AUG 27 2010

OFFICE OF PETITIONS

In re Patent of Reid et al.	:	
Patent No. 7,605,082	:	
Issue Date: October 20, 2009	:	DECISION ON REQUEST
Application No. 11/251,353	:	FOR RECONSIDERATION OF
Filed: October 13, 2005	:	PATENT TERM ADJUSTMENT
Docket No. NOVLP141/NVLS-3107	:	

This is a decision on the petition under 37 CFR 1.705(d), filed May 13, 2010, requesting that the patent term adjustment indicated on the above-identified patent be corrected to indicate that the term of the above-identified patent is extended or adjusted by three hundred six (306) days. The petition was timely filed within one month of the mailing of a Decision on Request for Recalculation of Patent Term Adjustment in View of Wyeth and Notice of Intent to Issue Certificate of Correction, mailed April 20, 2010.

The request is **DISMISSED**.

Patentees are given **one (1) month or thirty (30) days**, whichever is longer, to respond to this decision. No extensions of time will be granted under § 1.136(a).

The Decision on Request for Recalculation of Patent Term Adjustment in View of Wyeth and Notice of Intent to Issue Certificate of Correction, mailed April 20, 2010, states that if patentees desire to file a request for reconsideration of the patent term adjustment set for the in the decision, that patentees must file a petition and include the information required by 37 CFR 1.705(b)(2) and the fee required by 37 CFR 1.18(e).

Patentees have filed a petition for reconsideration of the patent term adjustment and set forth a detailed explanation as to their calculation of the patent term adjustment. However, patentees failed to submit the $200.00 fee required by 37 CFR 1.18(e) and no general authorization to charge fees under 37 CFR 1.18 to a deposit account has been filed after the mailing of a Notice of Allowance.

Payment of the fee is a prerequisite to consideration of the request for reconsideration of patent term adjustment.

Accordingly, the request is dismissed for failure to submit the fee under § 1.18(e).

Further correspondence with respect to this decision should be addressed as follows:

By mail: Mail Stop Petition
Commissioner for Patents
P.O. Box 1450
Alexandria, VA 22313-1450

By fax: (571) 273-8300
ATTN: Office of Petitions

By hand: Customer Service Window
Randolph Building
401 Dulany Street
Alexandria, VA 22314

Correspondence may also be submitted electronically via EFS-Web.

Telephone inquiries specific to this matter should be directed to the undersigned at (571) 272-3230.

Shirene Willis Brantley

Shirene Willis Brantley
Senior Petitions Attorney
Office of Petitions

UNITED STATES PATENT AND TRADEMARK OFFICE

Commissioner for Patents
United States Patent and Trademark Office
P.O. Box 1450
Alexandria, VA 22313-1450
www.uspto.gov

Weaver Austin Villeneuve & Sampson LLP - NOVL
Attn.: Novellus Systems, Inc.
P.O. Box 70250
Oakland CA 94612-0250

MAILED
NOV 22 2010
OFFICE OF PETITIONS

In re Patent of Reid et al. :
Patent No. 7,605,082 :
Issue Date: October 20, 2009 : DECISION ON REQUEST
Application No. 11/251,353 : FOR RECONSIDERATION OF
Filed: October 13, 2005 : PATENT TERM ADJUSTMENT
Docket No. NOVLP141/NVLS-3107 :

This is a decision on the petition, filed September 13, 2010, requesting that the patent term adjustment indicated on the above-identified patent be corrected to indicate that the term of the above-identified patent is extended or adjusted by three hundred six (306) days.

The petition is **granted to extent indicated**.

In the present petition, patentees request recalculation based on the Office's failure to correctly calculate the three year delay period under 37 CFR 1.702(b) and 1.703(b) and the Office's failure to properly calculate the periods of delay under 37 CFR 1.704(c)(10) for two Information Disclosure Statements (IDSs) filed on June 25, 2008 and July 8, 2008 after the notice of allowance was mailed.

The maximum period of delay under 35 U.S.C. § 154(b)(1)(B) ("B Delay") is 372 days, beginning on October 14, 2008, the day after three years after the application's filing date, and ending on October 20, 2009, the date the patent issued. However, patentees fail to subtract the 320 day overlapping period of delay for the failure to issue the patent within four months of the date the issue fee and all outstanding requirements were satisfied (37 CFR 1.702(a)(4)), beginning on December 5, 2008 and ending on October 20, 2009 already accounted for under 35 U.S.C. § 154(b)(1)(A) ("A Delay"). Thus, the B Delay period is 52 days.

As noted on the form itself, a Request for Recalculation of Patent Term Adjustment in View of Wyeth may be filed if the sole basis for requesting the recalculation is the Office's pre-Wyeth interpretation of 35 U.S.C. 154(b)(2)(A).

37 CFR 1.705(d), provides that:

> If there is a revision to the patent term adjustment indicated in the notice of allowance, the patent will indicate the revised patent term adjustment. If the patent indicates or should have indicated a revised patent term adjustment, any request for reconsideration of the patent term adjustment indicated in the patent must be filed within two months of the date the patent issued and must comply with the requirements of paragraphs (b)(1) and (b)(2) of this section. Any request for reconsideration under this section that raises issues that were raised, or could have been raised, in an application for patent term adjustment under paragraph (b) of this section shall be dismissed as untimely as to those issues.

If applicants did not agree with the lengths of the reductions under 37 CFR 1.704(c)(10) for two IDSs filed on June 25, 2008 and July 8, 2008, respectively, after the notice of allowance was mailed, the appropriate time to contest them would have been within two months of the date the patent issued.

It is not possible for patentees to argue any issue other than the Office's pre-Wyeth interpretation of 35 U.S.C. 154(b)(2)(A) in a Request for Recalculation of Patent Term Adjustment in View of Wyeth or in a reconsideration of a decision on a Request for Recalculation of Patent Term Adjustment in View of Wyeth.

Patentees did not challenge the lengths of the reductions under 37 CFR 1.704(c)(10) in a timely manner. The Office will not address the 37 CFR 1.704(c)(10) argument now.

Accordingly, the correct patent term adjustment is 199 days (41+26+320 days A Delay plus 372 days B-max Delay minus 320 overlapping days minus 240 days Applicant Delay).

Pursuant to 37 CFR 1.322, the Office will not issue a certificate of correction without first providing assignee or patentee an opportunity to be heard. Accordingly, patentees are given **one (1) month or thirty (30) days**, whichever is longer, from the mail date of this decision to respond. No extensions of time will be granted under § 1.136.

Nothing in this decision shall be construed as a waiver of the requirement of 35 U.S.C. 154(b)(4) that any civil action by an applicant dissatisfied with a determination made by the Director under 35 U.S.C. 154(b)(3) be filed in the United States District Court for the District of Columbia within 180 days after the grant of the patent.

The Office acknowledges receipt of the required $200.00 fee under 37 CFR 1.18(e).

The application is being forwarded to the Certificates of Correction Branch for issuance of a certificate of correction. The Office will issue a certificate of correction indicating that the term of the above-identified patent is extended or adjusted by **one hundred ninety-nine (199)** days.

Telephone inquiries specific to this decision should be directed to the undersigned at (571) 272-3230.

Shirene Willis Brantley

Shirene Willis Brantley
Senior Petitions Attorney
Office of Petitions

Enclosure: Copy of DRAFT Certificate of Correction

UNITED STATES PATENT AND TRADEMARK OFFICE

CERTIFICATE OF CORRECTION

PATENT : 7,605,082 B1

DATED : **October 20, 2009** **DRAFT**

INVENTOR(S) : Reid et al.

It is certified that error appears in the above-identified patent and that said Letters Patent is hereby corrected as shown below:

On the cover page,

[*] Notice: Subject to any disclaimer, the term of this patent is extended or adjusted under 35 U.S.C. 154(b) by 147 days

Delete the phrase "by 147 days" and insert – by 199 days--

UNITED STATES PATENT AND TRADEMARK OFFICE

Commissioner for Patents
United States Patent and Trademark Office
P.O. Box 1450
Alexandria, VA 22313-1450
www.uspto.gov

Maryellen Feehery Hank, Esquire
Reed Smith LLP
2500 One Liberty Place
1650 Market Street
Philadelphia PA 19103-7301

MAILED

JAN 10 2011

OFFICE OF PETITIONS

In re Application of	:	
Keshavaraja Alive et al.	:	
Application No. 11/251,372	:	ON PETITION
Filed: May 4, 2006	:	
Attorney Docket No. A424-USA	:	

This is a decision on the petition under the unintentional provisions of 37 CFR 1.137(b), filed November 19, 2010, to revive the above-identified application.

The petition is **GRANTED**.

The application became abandoned for failure to reply in a timely manner to the final Office action mailed, May 18, 2010, which set a shortened statutory period for reply of three (3) months. A three month extension of time was obtained. Accordingly, the application became abandoned on June 3, 2010. A reply in the form of an amendment was timely received on November 18, 2010, however a supplemental response to the amendment and RCE (Request for Continued Examination) was filed on November 19, 2010, on the date of abandonment.

The petition satisfies the requirements of 37 CFR 1.137(b) in that petitioner has supplied (1) the reply in the form of a RCE (Request for Continued Examination, with the required fee of $405, (2) the petition fee of $810, and (3) a proper statement of unintentional delay. Accordingly, the RCE is accepted as being unintentionally delayed.

Telephone inquiries concerning this decision should be directed to Kimberly Inabinet at (571) 272-4618.

This application is being referred to Technology Center AU 1736 for appropriate action by the Examiner in the normal course of business on the RCE received November 19, 2010.

/Kimberly Inabinet/

Kimberly Inabinet
Petitions Examiner
Office of Petitions

UNITED STATES PATENT AND TRADEMARK OFFICE

Commissioner for Patents
United States Patent and Trademark Office
P.O. Box 1450
Alexandria, VA 22313-1450
www.uspto.gov

MAILED

AUG 06 2010

OFFICE OF PETITIONS

KERR IP GROUP, LLC
MICHAEL A. KERR
P.O. BOX 18600
RENO, NV 89511

In re Application of	:	
Bonnie L. Krum	:	
Application No. 11/251,612	:	ON PETITION
Filed: October 14, 2005	:	
Attorney Docket No. KRUM 05.001	:	

This is a decision on the petition under the unintentional provisions of 37 CFR 1.137(b), filed July 15, 2010, to revive the above-identified application.

The petition is **GRANTED**.

The application became abandoned for failure to reply in a timely manner to the non-final Office action mailed, April 30, 2009, which set a shortened statutory period for reply of three (3) months. No extensions of time under the provisions of 37 CFR 1.136(a) were timely obtained. Accordingly, the application became abandoned on July 31, 2009. A Notice of Abandonment was mailed June 3, 2010.

The petition satisfies the requirements of 37 CFR 1.137(b) in that petitioner has supplied (1) the reply in the form of an amendment (previously submitted on November 30, 2009), (2) the petition fee of $810, and (3) a proper statement of unintentional delay.

Telephone inquiries concerning this decision should be directed to the undersigned at (571) 272-6059.

This application is being referred to Technology Center 1791 for further examination on the merits

A. Kelley

Alicia Kelley
Petitions Examiner
Office of Petitions

UNITED STATES PATENT AND TRADEMARK OFFICE

Commissioner for Patents
United States Patent and Trademark Office
P.O. Box 1450
Alexandria, VA 22313-1450
www.uspto.gov

KERR IP GROUP, LLC
MICHAEL A. KERR
P.O. Box 18600
RENO NV 89511

MAILED

APR 11 2011

OFFICE OF PETITIONS

In re Application of	:	
KRUM, Bonnie L.	:	
Application No. 11/251,612	:	DECISION ON PETITION
Filed: October 14, 2005	:	TO WITHDRAW
Attorney Docket No.	:	FROM RECORD
	:	

This is a decision on the Request to Withdraw as attorney or agent of record under 37 C.F.R. § 1.36(b), filed March 10, 2011.

The request is **APPROVED**.

A grantable request to withdraw as attorney/agent of record must be signed by every attorney/agent seeking to withdraw or contain a clear indication that one attorney is signing on behalf of another/others. The Office requires the practitioner(s) requesting withdrawal to certify that he, she, or they have: (1) given reasonable notice to the client, prior to the expiration of the response period, that the practitioner(s) intends to withdraw from employment; (2) delivered to the client or a duly authorized representative of the client all papers and property (including funds) to which the client is entitled; and (3) notified the client of any responses that may be due and the time frame within which the client must respond, pursuant 37 CFR 10.40(c).

The request was signed by Michael Kerr on behalf of all attorneys of record who are associated with customer No. 48008. All attorneys/agents associated with the Customer Number 48008 have been withdrawn. Applicant is reminded that there is no attorney of record at this time.

All future correspondence will be directed to the inventor Bonnie Krum at the address indicated below. There is an outstanding Office action mailed March 17, 2011 that requires a reply from the applicant.

Telephone inquiries concerning this decision should be directed to Tredelle Jackson at 571-272-2783.

/Tredelle D. Jackson/
Paralegal Specialist
Office of Petitions

cc: **BONNIE KRUM**
155 EAST LARAMIE LANE
RENO NV 89521

UNITED STATES PATENT AND TRADEMARK OFFICE

Commissioner for Patents
United States Patent and Trademark Office
P.O. Box 1450
Alexandria, VA 22313-1450
www.uspto.gov
DIW Jan-11

FAEGRE & BENSON LLP
PATENT DOCKETING - INTELLECTUAL PROPERTY
2200 WELLS FARGO CENTER
90 SOUTH SEVENTH STREET
MINNEAPOLIS MN 55402-3901

MAILED

JAN 05 2011

OFFICE OF PETITIONS

In re Application of	:	
Gill, Phillips, and Banki	:	DECISION REFUSING STATUS
Application Number: 11/251636	:	UNDER 37 CFR 1.47(a)
Filing Date: 10/14/2005	:	
Attorney Docket Number: 56578-319544(308399)	:	

This is in response to the petition under 37 CFR 1.47(a), filed on October 26, 2010.

The petition is **DISMISSED**.

Rule 47 applicant is given TWO MONTHS from the mailing date of this decision to reply, correcting the below-noted deficiencies. Any reply should be entitled "Request for Reconsideration of Petition Under 37 CFR 1.47(a)," and should only address the deficiencies noted below, except that the reply may include an oath or declaration executed by the non-signing inventor. **FAILURE TO RESPOND WILL RESULT IN ABANDONMENT OF THE APPLICATION.** Extensions of time may be obtained in accordance with 37 CFR 1.136(a).

The above-identified reissue application was filed on October 14, 2005. A reissue application declaration by the assignee was filed on March 29, 2006.

On June 15, 2010, an Office action was mailed, requiring, *inter alia*, a reissue declaration signed by the inventors.

On October 26, 2010, the subject petition was filed, accompanied by a reissue declaration by the inventors, Timothy Gill, Matthew Phillips, and Parviz Banki, signed by joint inventor Gill on behalf of himself and non-signing joint inventors Phillips and Banki.

Petitioners assert that the application and declaration were sent to the non-signing inventors. Inventor Phillips has refused, via

email, to sign the declaration, while inventor Banki has not responded to the mailing of the application papers.

A grantable petition under 37 CFR 1.47(a) requires:

(1) proof that the non-signing inventor cannot be reached or located, notwithstanding diligent effort, or refuses to sign the oath or declaration after having been presented with the application papers (specification, claims and drawings);

(2) an acceptable oath or declaration in compliance with 35 U.S.C. §§ 115 and 116;

(3) the petition fee;

(4) a surcharge of $130 or $65 (small entity) if the petition and/or declaration is not filed at the time of filing the application, and

(5) a statement of the last known address of the non-signing inventor.

The petition lacks item (2).

In regards to item (2), above, the declaration filed with the petition does not meet the requirements of 37 CFR 1.63 and 1.175 because it does not include the mailing address and residency city and state or city and foreign country of non-signing inventors Phillips and Banki. 37 CFR 1.63(c)(1) states, in pertinent part, that the oath or declaration must also identify: (1) The mailing address, and the residence if an inventor lives at a location which is different from where the inventor customarily receives mail, of each inventor. Accordingly, a new declaration signed by the signing inventor on behalf of himself and the non-signing inventors, identifying the mailing address and residency city and state or city and foreign country, must be filed with a renewed petition.

The petition fee set forth in § 1.17(g) has been received.

Further correspondence with respect to this matter should be addressed as follows:

By mail: Mail Stop Petition
Commissioner for Patents
P.O. Box 1450
Alexandria, VA 22313-1450

By FAX: (571) 273-8300
Attn: Office of Petitions

By hand: Customer Service Window

Mail Stop Petition
Randolph Building
401 Dulany Street
Alexandria, VA 22314

A reply may also be filed via EFS-Web.

Telephone inquiries related to this decision should be directed to the undersigned at 571-272-3231.

D Wood

Douglas I. Wood
Senior Petitions Attorney
Office of Petitions

UNITED STATES PATENT AND TRADEMARK OFFICE

COMMISSIONER FOR PATENTS
UNITED STATES PATENT AND TRADEMARK OFFICE
P.O. BOX 1450
ALEXANDRIA, VA 22313-1450
www.uspto.gov
DIW Jan-11

FAEGRE & BENSON LLP
PATENT DOCKETING - INTELLECTUAL PROPERTY
2200 WELLS FARGO CENTER
90 SOUTH SEVENTH STREET
MINNEAPOLIS MN 55402-3901

MAILED

JAN 20 2011

OFFICE OF PETITIONS

In re Application of	:	
Gill, Phillips, and Banki	:	DECISION ACCORDING STATUS
Application Number: 11/251636	:	UNDER 37 CFR 1.47(a)
Filing Date: 10/14/2005	:	
Attorney Docket Number: 56578-319544(308399)	:	

This is in response to the renewed petition under 37 CFR 1.47(a), filed on January 14, 2011.

The petition is **GRANTED**.

The above-identified reissue application was filed on October 14, 2005. A reissue application declaration by the assignee was filed on March 29, 2006.

On June 15, 2010, an Office action was mailed, requiring, *inter alia*, a reissue declaration signed by the inventors.

On October 26, 2010, the subject petition was filed, accompanied by a reissue declaration by the inventors, Timothy Gill, Matthew Phillips, and Parviz Banki, signed by joint inventor Gill on behalf of himself and non-signing joint inventors Phillips and Banki.

Petitioners assert that the application and declaration were sent to the non-signing inventors. Inventor Phillips has refused, via email, to sign the declaration, while inventor Banki has not responded to the mailing of the application papers.

Upon further review, the mailing address, and residence city and state, for each of the inventors is contained in the Application Data Sheet filed with the original application papers on October 14, 2005. Therefore, the petition may be favorably considered.

As such, the showing of record is that non-signing inventor Phillips has expressly refused, and inventor Banki has constructively refused, to join in the filing of the application. The above-identified application and papers have been reviewed and found in compliance with 37 CFR 1.47(a). This application is hereby accorded Rule 1.47(a) status.

As provided in Rule 1.47(c), this Office will forward notice of this application's filing to the non-signing inventor at the address referenced above and listed in the petition, not the Application Data Sheet. Notice of the filing of this application will also be published in the *Official Gazette*.

The petition fee has been received. No further fees are due.

The application is being referred to Technology Center Art Unit 2624 for further processing.

Telephone inquiries related to this decision should be directed to the undersigned at 571-272-3231.

DWood

Douglas I. Wood
Senior Petitions Attorney
Office of Petitions

UNITED STATES PATENT AND TRADEMARK OFFICE

COMMISSIONER FOR PATENTS
UNITED STATES PATENT AND TRADEMARK OFFICE
P.O. BOX 1450
ALEXANDRIA, VA 22313-1450
www.uspto.gov
DIW Jan-11

Matthew Phillips
2515 Halbeck Drive
Champaign IL 61822

MAILED
JAN 20 2011
OFFICE OF PETITIONS

In re Application of
Gill et al.
Application No. 11/251,636
Filed: October 14, 2005
For: PROCESS AND SYSTEM FOR DEFINING AND VISUALLY DEPICTING COLORS FROM THE COMPONENTS OF ARBITRARY COLOR MODELS

Dear Mr. Phillips:

You are named as a joint inventor in the above identified United States reissue patent application, filed under the provisions of 35 U.S.C. 116 (United States Code), and 37 CFR 1.47(a), Rules of Practice in Patent Cases. Should a patent be granted on the application you will be designated therein as a joint inventor.

As a named inventor you are entitled to inspect any paper in the file wrapper of the application, order copies of all or any part thereof (at a prepaid cost per 37 CFR 1.19) or make your position of record in the application. Alternatively, you may arrange to do any of the preceding through a registered patent attorney or agent presenting written authorization from you. If you care to join the application, counsel of record (see below) would presumably assist you. Joining in the application would entail the filing of an appropriate oath or declaration by you pursuant to 37 CFR 1.63.

Telephone inquiries regarding this communication should be directed to the undersigned at 571/272-3231. Requests for information regarding your application should be directed to the File Information Unit at 571-272-3150. Information regarding how to pay for and order a copy of the application, or a specific paper in the application, should be directed to Certification Division at 571-272-3150 or 1-800-972-6382 (outside the Washington D.C. area).

D Wood
Douglas I. Wood
Senior Petitions Attorney
Office of Petitions

FAEGRE & BENSON LLP
PATENT DOCKETING – INTELLECTUAL PROPERTY
2200 WELLS FARGO CENTER
90 SOUTH SEVENTH STREET
MINNEAPOLIS MN 55402-3901

UNITED STATES PATENT AND TRADEMARK OFFICE

COMMISSIONER FOR PATENTS
UNITED STATES PATENT AND TRADEMARK OFFICE
P.O. BOX 1450
ALEXANDRIA, VA 22313-1450
www.uspto.gov
DIW Jan-11

Parviz Banki
2629 262nd Place SE
Sammamish WA 98075

MAILED
JAN 20 2011
OFFICE OF PETITIONS

In re Application of
Gill et al.
Application No. 11/251,636
Filed: October 14, 2005
For: PROCESS AND SYSTEM FOR DEFINING AND VISUALLY DEPICTING COLORS FROM THE COMPONENTS OF ARBITRARY COLOR MODELS

Dear Mr. Banki:

You are named as a joint inventor in the above identified United States reissue patent application, filed under the provisions of 35 U.S.C. 116 (United States Code), and 37 CFR 1.47(a), Rules of Practice in Patent Cases. Should a patent be granted on the application you will be designated therein as a joint inventor.

As a named inventor you are entitled to inspect any paper in the file wrapper of the application, order copies of all or any part thereof (at a prepaid cost per 37 CFR 1.19) or make your position of record in the application. Alternatively, you may arrange to do any of the preceding through a registered patent attorney or agent presenting written authorization from you. If you care to join the application, counsel of record (see below) would presumably assist you. Joining in the application would entail the filing of an appropriate oath or declaration by you pursuant to 37 CFR 1.63.

Telephone inquiries regarding this communication should be directed to the undersigned at 571/272-3231. Requests for information regarding your application should be directed to the File Information Unit at 571-272-3150. Information regarding how to pay for and order a copy of the application, or a specific paper in the application, should be directed to Certification Division at 571-272-3150 or 1-800-972-6382 (outside the Washington D.C. area).

D Wood
Douglas I. Wood
Senior Petitions Attorney
Office of Petitions

FAEGRE & BENSON LLP
PATENT DOCKETING – INTELLECTUAL PROPERTY
2200 WELLS FARGO CENTER
90 SOUTH SEVENTH STREET
MINNEAPOLIS MN 55402-3901

UNITED STATES PATENT AND TRADEMARK OFFICE

UNITED STATES DEPARTMENT OF COMMERCE
United States Patent and Trademark Office
Address: COMMISSIONER FOR PATENTS
P.O. Box 1450
Alexandria, Virginia 22313-1450
www.uspto.gov

LEON R TURKEVICH
2000 M STREET NW
7TH FLOOR
WASHINGTON, DC 200363307

Mail Date: 08/04/2010

Applicant	: Pascal Thubert	: DECISION ON REQUEST FOR
Patent Number	: 7656857	: RECALCULATION of PATENT
Issue Date	: 02/02/2010	: TERM ADJUSTMENT IN VIEW
Application No	: 11/251,765	: OF WYETH AND NOTICE OF INTENT TO
Filed	: 10/18/2005	: ISSUE CERTIFICATE OF CORRECTION
		:

The Request for Recalculation is **GRANTED** to the extent indicated.

The patent term adjustment has been determined to be **1083** days. The USPTO will *sua sponte* issue a certificate of correction reflecting the amount of PTA days determined by the recalculation.

Prior to the issuance of the certificate of correction, the USPTO will afford patentee an opportunity to be heard and request reconsideration. Accordingly, patentee has **one month or thirty (30) days**, whichever is longer, to file a request for reconsideration of this patent term adjustment calculation. See 35 U.S.C. 154(b)(3)(B)(ii) and 37 CFR 1.322(a)(4). No extensions of time will be granted under 37 CFR 1.136.

Patentee should use document code PET.OP if electronically filing a request for reconsideration of this patent term adjustment calculation. The patentee must also include the information required by 37 CFR 1.705(b)(2) and the fee required by 37 CFR 1.18(e). If patentee does not file a timely request for reconsideration of this patent term adjustment calculation including the information required by 37 CFR 1.705(b)(2) and the fee required by 37 CFR 1.18(e), the USPTO will issue a certificate of correction reflecting the PTA determination noted above.

Patentee should be aware that in order to preserve the right to review in the United States District Court for the District of Columbia of the USPTO patent term adjustment determination, patentee must ensure that he or she also take the steps required under 35 U.S.C. 154(b)(4)(A) in a timely manner. Nothing in the request for recalculation should be construed as providing an alternative time frame for commencing a civil action under 35 U.S.C. 154(b)(4)(A).

Any questions concerning this decision should be directed to the Office of Patent Legal Administration at 571-272-7702.

PTO/SB/131 (01-10)
Approved for use through 02/28/2011. OMB 0651-0020
U.S. Patent and Trademark Office; U. S. DEPARTMENT OF COMMERCE
Under the Paperwork Reduction Act of 1995, no persons are required to respond to a collection of information unless it displays a valid OMB control number.

REQUEST FOR RECALCULATION OF PATENT TERM ADJUSTMENT IN VIEW OF *WYETH**

Attorney Docket Number: WUPE3002/REF	Patent Number: 7662486
Filing Date (or 371(b) or (f) Date): 2005-10-18	Issue Date: 2010-02-16
First Named Inventor: Pei-Chi Wu	
Title: LIGHT EMISSION MATERIAL AND ORGANIC ELECTROLUMINESCENT DEVICE USING THE SAME	

PATENTEE HEREBY REQUESTS RECALCULATION OF THE PATENT TERM ADJUSTMENT (PTA) UNDER 35 USC 154(b) INDICATED ON THE ABOVE-IDENTIFIED PATENT. THE PATENTEE'S SOLE BASIS FOR REQUESTING THE RECALCULATION IS THE USPTO'S PRE-*WYETH* INTERPRETATION OF 35 U.S.C. 154(b)(2)(A).

Note: This form is only for requesting a recalculation of PTA for patents issued before March 2, 2010, if the sole basis for requesting the recalculation is the USPTO's pre-*Wyeth* interpretation of 35 U.S.C. 154(b)(2)(A). See Instruction Sheet on page 2 for more information.

Patentees are reminded that to preserve the right to review in the United States District Court for the District of Columbia of the USPTO's patent term adjustment determination, a patentee must ensure that he or she also takes the steps required under 35 U.S.C. 154(b)(3) and (b)(4) and 37 CFR 1.705 in a timely manner.

**Wyeth v. Kappos*, No. 2009-1120 (Fed. Cir., Jan. 7, 2010).

Signature /ThomasJMoore/	Date 2010-08-12
Name (Print/Typed) Thomas J. Moore	Registration Number 28974

***Note**: Signatures of all the inventors or assignees of record of the entire interest or their representative(s) are required in accordance with 37 CFR 1.33 and 11.18. Please see 37 CFR 1.4(d) for the form of the signature. If necessary, submit multiple forms for more than one signature, see below**.*

☐ *Total of _____ forms are submitted.

The information is required to obtain or retain a benefit by the public which is to file (and by the USPTO to process) an application. Confidentiality is governed by 35 U.S.C. 122 and 37 CFR 1.11 and 1.14. This collection is estimated to take 12 hours to complete, including gathering, preparing, and submitting the completed application form to the USPTO. Time will vary depending upon the individual case. Any comments on the amount of time you require to complete this form and/or suggestions for reducing this burden, should be sent to the Chief Information Officer, U.S. Patent and Trademark Office, U.S. Department of Commerce, P.O. Box 1450, Alexandria, VA 22313-1450. DO NOT SEND FEES OR COMPLETED FORMS TO THIS ADDRESS. **SEND TO: Commissioner for Patents, P.O. Box 1450, Alexandria, VA 22313-1450.**

If you need assistance in completing the form, call 1-800-PTO-9199 and select option 2.

PTO/SB/131 (01-10)
Approved for use through 02/28/2011. OMB 0651-0020
U.S. Patent and Trademark Office; U. S. DEPARTMENT OF COMMERCE
Under the Paperwork Reduction Act of 1995, no persons are required to respond to a collection of information unless it displays a valid OMB control number.

Instruction Sheet for: REQUEST FOR RECALCULATION OF PATENT TERM ADJUSTMENT IN VIEW OF *WYETH**

(Not to be Submitted to the USPTO)

This form is only for requesting a recalculation of PTA for patents issued before March 2, 2010, if the sole basis for requesting the recalculation is the USPTO's pre-*Wyeth* interpretation of 35 U.S.C. 154(b)(2)(A).

This form must be filed within 180 days of the day the patent was granted, with the following exception:

> Patentees who received a decision from the USPTO under the USPTO's pre-Wyeth interpretation of 35 U.S.C. 154(b)(2)(A) may file a request for reconsideration of that decision if such a request for reconsideration is filed within **two months** of the date of the decision (37 CFR 1.181(f)). If the patentee's sole basis for requesting reconsideration of the decision is the USPTO's pre-Wyeth interpretation of 35 U.S.C. 154(b)(2)(A), the request for reconsideration need only state that reconsideration is being requested in view of Wyeth (this form may be used for this purpose if it is filed within **two months** of the date of the decision from the USPTO).

Do not use this form if the application has been allowed, but not yet issued as a patent.

1. **For patents issued before March 2, 2010:** A request for reconsideration under 37 CFR 1.705(d) and the fee set forth in 37 CFR 1.18(e) are not required, provided that the patentee's sole basis for requesting recalculation of the PTA in the patent is the USPTO's pre-*Wyeth* interpretation of 35 U.S.C. 154(b)(2)(A) and this form is filed within 180 days of the day the patent was granted.

2. **For patents issued on or after March 2, 2010 (do not use this form):** Patentees seeking a revised PTA in a patent issued on or after March 2, 2010, must file a request for reconsideration under 37 CFR 1.705(d) that complies with the requirements of 37 CFR 1.705(b)(1) and (b)(2) within two months of the day the patent issued.

For more information, see "Notice Concerning Calculation of the Patent Term Adjustment With Respect to the Overlapping Delay Provision of 35 U.S.C. 154(b)(2)(A)" available on the USPTO Web site at http://www.uspto.gov/patents/law/notices/2010.jsp.

**Wyeth v. Kappos*, No. 2009-1120 (Fed. Cir., Jan. 7, 2010).

Privacy Act Statement

The **Privacy Act of 1974 (P.L. 93-579)** requires that you be given certain information in connection with your submission of the attached form related to a patent application or patent. Accordingly, pursuant to the requirements of the Act, please be advised that: (1) the general authority for the collection of this information is 35 U.S.C. 2(b)(2); (2) furnishing of the information solicited is voluntary; and (3) the principal purpose for which the information is used by the U.S. Patent and Trademark Office is to process and/or examine your submission related to a patent application or patent. If you do not furnish the requested information, the U.S. Patent and Trademark Office may not be able to process and/or examine your submission, which may result in termination of proceedings or abandonment of the application or expiration of the patent.

The information provided by you in this form will be subject to the following routine uses:

1. The information on this form will be treated confidentially to the extent allowed under the Freedom of Information Act (5 U.S.C. 552) and the Privacy Act (5 U.S.C 552a). Records from this system of records may be disclosed to the Department of Justice to determine whether disclosure of these records is required by the Freedom of Information Act.
2. A record from this system of records may be disclosed, as a routine use, in the course of presenting evidence to a court, magistrate, or administrative tribunal, including disclosures to opposing counsel in the course of settlement negotiations.
3. A record in this system of records may be disclosed, as a routine use, to a Member of Congress submitting a request involving an individual, to whom the record pertains, when the individual has requested assistance from the Member with respect to the subject matter of the record.
4. A record in this system of records may be disclosed, as a routine use, to a contractor of the Agency having need for the information in order to perform a contract. Recipients of information shall be required to comply with the requirements of the Privacy Act of 1974, as amended, pursuant to 5 U.S.C. 552a(m).
5. A record related to an International Application filed under the Patent Cooperation Treaty in this system of records may be disclosed, as a routine use, to the International Bureau of the World Intellectual Property Organization, pursuant to the Patent Cooperation Treaty.
6. A record in this system of records may be disclosed, as a routine use, to another federal agency for purposes of National Security review (35 U.S.C. 181) and for review pursuant to the Atomic Energy Act (42 U.S.C. 218(c)).
7. A record from this system of records may be disclosed, as a routine use, to the Administrator, General Services, or his/her designee, during an inspection of records conducted by GSA as part of that agency's responsibility to recommend improvements in records management practices and programs, under authority of 44 U.S.C. 2904 and 2906. Such disclosure shall be made in accordance with the GSA regulations governing inspection of records for this purpose, and any other relevant (*i.e.*, GSA or Commerce) directive. Such disclosure shall not be used to make determinations about individuals.
8. A record from this system of records may be disclosed, as a routine use, to the public after either publication of the application pursuant to 35 U.S.C. 122(b) or issuance of a patent pursuant to 35 U.S.C. 151. Further, a record may be disclosed, subject to the limitations of 37 CFR 1.14, as a routine use, to the public if the record was filed in an application which became abandoned or in which the proceedings were terminated and which application is referenced by either a published application, an application open to public inspection or an issued patent.
9. A record from this system of records may be disclosed, as a routine use, to a Federal, State, or local law enforcement agency, if the USPTO becomes aware of a violation or potential violation of law or regulation.

UNITED STATES PATENT AND TRADEMARK OFFICE

UNITED STATES DEPARTMENT OF COMMERCE
United States Patent and Trademark Office
Address: COMMISSIONER FOR PATENTS
P.O. Box 1450
Alexandria, Virginia 22313-1450
www.uspto.gov

BACON & THOMAS, PLLC
625 SLATERS LANE
FOURTH FLOOR
ALEXANDRIA, VA 22314-1176

Mail Date: 08/18/2010

Applicant	: Pei-Chi Wu	: DECISION ON REQUEST FOR
Patent Number	: 7662486	: RECALCULATION of PATENT
Issue Date	: 02/16/2010	: TERM ADJUSTMENT IN VIEW
Application No	: 11/251,900	: OF WYETH AND NOTICE OF INTENT TO
Filed	: 10/18/2005	: ISSUE CERTIFICATE OF CORRECTION
		:

The Request for Recalculation is **GRANTED** to the extent indicated.

The patent term adjustment has been determined to be **581** days. The USPTO will *sua sponte* issue a certificate of correction reflecting the amount of PTA days determined by the recalculation.

Prior to the issuance of the certificate of correction, the USPTO will afford patentee an opportunity to be heard and request reconsideration. Accordingly, patentee has **one month or thirty (30) days**, whichever is longer, to file a request for reconsideration of this patent term adjustment calculation. See 35 U.S.C. 154(b)(3)(B)(ii) and 37 CFR 1.322(a)(4). No extensions of time will be granted under 37 CFR 1.136.

Patentee should use document code PET.OP if electronically filing a request for reconsideration of this patent term adjustment calculation. The patentee must also include the information required by 37 CFR 1.705(b)(2) and the fee required by 37 CFR 1.18(e). If patentee does not file a timely request for reconsideration of this patent term adjustment calculation including the information required by 37 CFR 1.705(b)(2) and the fee required by 37 CFR 1.18(e), the USPTO will issue a certificate of correction reflecting the PTA determination noted above.

Patentee should be aware that in order to preserve the right to review in the United States District Court for the District of Columbia of the USPTO patent term adjustment determination, patentee must ensure that he or she also take the steps required under 35 U.S.C. 154(b)(4)(A) in a timely manner. Nothing in the request for recalculation should be construed as providing an alternative time frame for commencing a civil action under 35 U.S.C. 154(b)(4)(A).

Any questions concerning this decision should be directed to the Office of Patent Legal Administration at 571-272-7702.

UNITED STATES PATENT AND TRADEMARK OFFICE

Commissioner for Patents
United States Patent and Trademark Office
P.O. Box 1450
Alexandria, VA 22313-1450
www.uspto.gov

SUGHRUE-265550
2100 PENNSYLVANIA AVE. NW
WASHINGTON DC 20037-3213

MAILED

AUG 2 0 2010

OFFICE OF PETITIONS

In re Application of	:	
Akiko Takahashi, et al.	:	
Application No. 11/251,962	:	DECISION GRANTING PETITION
Filed: October 18, 2005	:	UNDER 37 CFR 1.313(c)(2)
Attorney Docket No. Q90552	:	

This is a decision on the petition under 37 CFR 1.313(c)(2), filed, August 17, 2010 to withdraw the above-identified application from issue after payment of the issue fee.

The petition is **GRANTED**.

The above-identified application is withdrawn from issue for consideration of a submission under 37 CFR 1.114 (request for continued examination). *See* 37 CFR 1.313(c)(2).

Petitioner is advised that the issue fee paid on July 27, 2010 cannot be refunded. If, however, this application is again allowed, petitioner may request that it be applied towards the issue fee required by the new Notice of Allowance.[1]

Telephone inquiries should be directed to Terri Johnson at (571) 272-2991.

This application is being referred to Technology Center AU 1796 for processing of the request for continued examination under 37 CFR 1.114 and for consideration of the concurrently filed information disclosure statement.

Terri Johnson

Terri Johnson
Petitions Examiner
Office of Petitions

---

[1] *The request to apply the issue fee to the new Notice may be satisfied by completing and returning the new Part B – Fee(s) Transmittal Form (along with any balance due at the time of submission). Petitioner is advised that the Issue Fee Transmittal Form must be completed and timely submitted to avoid abandonment of the application.*

SPE RESPONSE FOR CERTIFICATE OF CORRECTION

Paper No.: _____

DATE : **3-23-11**

TO SPE OF : ART UNIT **3691**

SUBJECT : Request for Certificate of Correction for Appl. No.: **11252009** Patent No.: **7840486**

Please respond to this request for a certificate of correction within 7 days.

FOR IFW FILES:

Please review the requested changes/corrections as shown in the **COCIN** document(s) in the IFW application image. No new matter should be introduced, nor should the scope or meaning of the claims be changed.

Please complete the response (see below) and forward the completed response to scanning using document code **COCX**.

FOR PAPER FILES:

Please review the requested changes/corrections as shown in the attached certificate of correction. Please complete this form (see below) and forward it with the file to:

Certificates of Correction Branch (C of C)
Randolph Square – 9D10-E
Palm Location 7580

Omega Lewis
Certificates of Correction Branch

703-756-1575

Thank You For Your Assistance

The request for issuing the above-identified correction(s) is hereby:
Note your decision on the appropriate box.

☑ **Approved**	**All** changes apply.
☐ **Approved in Part**	Specify below which changes **do not** apply.
☐ **Denied**	State the reasons for denial below.

Comments: _____

_____

_____

_____

_____

SPE

3691
Art Unit

UNITED STATES PATENT AND TRADEMARK OFFICE

Commissioner for Patents
United States Patent and Trademark Office
P.O. Box 1450
Alexandria, VA 22313-1450
www.uspto.gov

Decision Date : February 14, 2012

In re Application of :

Jenny Manthey

Application No : 11252022

Filed : 17-Oct-2005

Attorney Docket No : TN416

DECISION ON PETITION

UNDER CFR 1.137(b)

This is an electronic decision on the petition under 37 CFR 1.137(b), filed February 14, 2012 , to revive the above-identified application.

The petition is **GRANTED.**

The above-identified application became abandoned for failure to reply in a timely manner to the Notice of Allowance and Issue Fee(s) Due. The date of abandonment is the day after the expiration date of the period set for reply in the Notice.

The electronic petition satisfies the conditions for revival pursuant to the provisions of 37 CFR 1.137(b) in that (1) the reply in the form of payment of the Issue Fee and the Publication Fee (if necessary); (2) the petition fee as set forth in 37 CFR 1.17 (m); (3) the drawing correction and/or other deficiencies (if necessary); and (4) the required statement of unintentional delay have been received. Accordingly, the Issue Fee payment is accepted as having been unintentionally delayed.

Telephone inquiries concerning this decision should be directed to the Patent Electronic Business Center (EBC) at 866-217-9197.

This application file is being directed to the Office of Data Management.

Office of Petitions

Doc Code: PET.AUTO Document Description: Petition automatically granted by EFS-Web	PTO/SB/64 U.S. Patent and Trademark Office Department of Commerce

Electronic Petition Request	PETITION FOR REVIVAL OF AN APPLICATION FOR PATENT ABANDONED UNINTENTIONALLY UNDER 37 CFR 1.137(b)
Application Number	11252022
Filing Date	17-Oct-2005
First Named Inventor	Jenny Manthey
Art Unit	2186
Examiner Name	MATTHEW CHRZANOWSKI
Attorney Docket Number	TN416
Title	MANAGING DATA TRANSFER BETWEEN DIFFERENT TYPES OF TAPE MEDIA WITH ENCRYPTION

The above-identified application became abandoned for failure to file a timely and proper reply to a notice or action by the United States Patent and Trademark Office. The date of abandonment is the day after the expiration date of the period set for reply in the office notice or action plus any extensions of time actually obtained.

APPLICANT HEREBY PETITIONS FOR REVIVAL OF THIS APPLICATION

NOTE: A grantable petition requires the following items:
(1) Petition fee;
(2) Reply and/or issue fee;
(3) Terminal disclaimer with disclaimer fee – required for all utility and plant applications filed before June 8, 1995; and for all design applications;
(4) Statement that the entire delay was unintentional.

Petition fee
The petition fee under 37CFR 1.17(m) is attached.

☐ Applicant claims SMALL ENTITY status. See 37 CFR 1.27.

☐ Applicant is no longer claiming SMALL ENTITY status. See 37 CFR 1.27(g)(2).

☐ Applicant(s) status remains as SMALL ENTITY.

☒ Applicant(s) status remains as other than SMALL ENTITY.

Issue Fee and Publication Fee :

Issue Fee and Publication Fee must accompany ePetition.

☒ Issue Fee Transmittal is attached

Drawing corrections and/ or other deficiencies.

- (●) Drawing corrections and/ or other deficiencies are not required
- ( ) I certify, in accordance with 37 CFR 1.4.(D)(4), that drawing corrections and/ or other deficiencies have previously been filed on
- ( ) Drawing corrections and/ or other deficiencies are attached.

☒ STATEMENT: The entire delay in filing the required reply from the due date for the required reply until the filing of a grantable petition under 37 CFR 1.137(b) was unintentional.

THIS PORTION MUST BE COMPLETED BY THE SIGNATORY OR SIGNATORIES

I certify, in accordance with 37 CFR 1.4(d)(4) that I am:

- (●) An attorney or agent registered to practice before the Patent and Trademark Office who has been given power of attorney in this application.
- ( ) An attorney or agent registered to practice before the Patent and Trademark Office, acting in a representative capacity.
- ( ) A sole inventor
- ( ) A joint inventor; I certify that I am authorized to sign this submission on behalf of all of the inventors.
- ( ) A joint inventor; all of whom are signing this e-petition.
- ( ) The assignee of record of the entire interest that has properly made itself of record pursuant to 37 CFR 3.71.

Signature	/Richard J. Gregson/
Name	Richard J. Gregson
Registration Number	41804

UNITED STATES PATENT AND TRADEMARK OFFICE

Commissioner for Patents
United States Patent and Trademark Office
P.O. Box 1450
Alexandria, VA 22313-1450
www.uspto.gov

LEE & HAYES, PLLC
601 W RIVERSIDE
SUITE 1400
SPOKANE, WA 99201

MAILED

MAR 01 2011

OFFICE OF PETITIONS

In re Application of	:	
COHEN, Alexander J. et al.	:	
Application No. 11/252,206	:	DECISION ON PETITION
Filed: October 17, 2005	:	TO WITHDRAW
Attorney Docket No. **QQ1 - 0051US**	:	FROM RECORD

This is a decision on the Request to Withdraw as attorney or agent of record under 37 C.F.R. § 1.36(b), filed January 25, 2011.

The request is **MOOT**.

A review of the file record indicates that the power of attorney to LEE & HAYES, PLLC has been previously changed. Accordingly, the request to withdraw under 37 C.F.R. § 1.36(b) is moot.

All future communications from the Office will continue to be directed to the below-listed address until otherwise notified by applicant.

Telephone inquires concerning this decision should be directed to Tredelle Jackson at 571-272-2783.

/Tredelle D. Jackson/
Paralegal Specialist
Office of Petitions

cc: **MARGARET ANDERSON**
106 E. 6TH STREET, SUITE 900
AUSTIN TX 78701

UNITED STATES PATENT AND TRADEMARK OFFICE

Commissioner for Patents
United States Patent and Trademark Office
P.O. Box 1450
Alexandria, VA 22313-1450
www.uspto.gov

MARGARET ANDERSON
106 E. 6TH STREET, SUITE 900
AUSTIN TX 78701

MAILED

MAR 16 2011

OFFICE OF PETITIONS

In re Application of	:	
Cohen et al.	:	DECISION ON PETITION
Application No. 11/252,258	:	TO WITHDRAW
Filed: October 17, 2005	:	FROM RECORD
Attorney Docket No. QQ1-0064US	:	

This is a decision on the Request to Withdraw as attorney or agent of record under 37 C.F.R. § 1.36(b), filed January 26, 2011.

The request is **NOT APPROVED**.

The Office will only accept correspondence address changes to the most current address information provided for the assignee of the entire interest *who properly became of record under 37 CFR 3.71,* or, if no assignee of the entire interest has properly been made of record, the most current address information provided for the first named inventor. 37 CFR 3.71(c) states:

An assignee becomes of record either in a national patent application or a reexamination proceeding by filing a statement in compliance with § 3.73(b) that is signed by a party who is authorized to act on behalf of the assignee.

According to a review of current USPTO records petitioner has not requested the address be changed to a properly recorded assignee or the first listed inventor. The Customer Number 55922 is neither the first named inventor nor the assignee who properly became of record under 37 CFR 3.71 As such, all future communications from the Office will continue to be directed to the above-listed address until otherwise notified by applicant.

Further, the address given on the petition differs from the address of record. A courtesy copy of this decision is being mailed to the address given on the petition; however, the Office will mail all future correspondence solely to the address of record.

Currently, there is an outstanding Office action mailed October 29, 2010 that requires a reply.

Telephone inquires concerning this decision should be directed to the undersigned at (571) 272-7751.

Joan Olszewski
Petitions Examiner
Office of Petitions

cc: LEE & HAYES, PLLC
601 W RIVERSIDE
SUITE 1400
SPOKANE, WA 99201

UNITED STATES PATENT AND TRADEMARK OFFICE

Commissioner for Patents
United States Patent and Trademark Office
P.O. Box 1450
Alexandria, VA 22313-1450
www.uspto.gov

July 29, 2011

MERIT MEDICAL SYSTEMS, INC.
C/O STOEL RIVES, LLP
ONE UTAH CENTER
201 SOUTH MAIN STREET -- SUITE 1100
SALT LAKE CITY UT 84111

In re Application of	:	
Mangiardi, Eric K. et, al	:	**DECISION ON PETITION**
Application No. 11/252.363	:	
Filed: 10/17/2005	:	***ACCEPTANCE OF COLOR***
Attorney Docket No. 37621/51401	:	***DRAWINGS***

This is a decision on the Petition to Accept Color Drawings under 37 C.F.R 1.84 (a) (2), received in the United States Patent and Trademark Office (USPTO) October 17, 2005.

The petition is **GRANTED**.

A grantable petition under 37 C.F.R. 1.84(a) (2) must be accompanied by the following.

1. The fee set forth under 37 C.F.R. 1.17(h),
2. Three (3) sets of the color drawings in question, or (1) set if filed via EFS, and
3. The specification contains appropriate language referring to the color drawings as the first paragraph in that portion of the specification relating to the brief description of the drawings.

The petition was accompanied by all of the required fees and drawings. The specification contains the appropriate language. Therefore, the petition is GRANTED.

Telephone inquires relating to this decision may be directed to the undersigned in the Office of Data Management at 571-272-4200.

/Diane Terry/
Quality Control Specialist
Office of Data Management
Publications Branch

UNITED STATES PATENT AND TRADEMARK OFFICE

Commissioner for Patents
United States Patent and Trademark Office
P.O. Box 1450
Alexandria, VA 22313-1450
www.uspto.gov

PHILIPS INTELLECTUAL PROPERTY & STANDARDS
P.O. BOX 3001
BRIARCLIFF MANOR NY 10510

MAILED
FEB 01 2012
OFFICE OF PETITIONS

In re Application of	:	
Mark Pugh et al	:	
Application No. 11/252,421	:	DECISION ON PETITION
Filed: October 17, 2005	:	UNDER 37 CFR 1.313(c)
Attorney Docket No. 007108US1	:	

This is a decision on the petition under 37 CFR 1.313(c), filed January 31, 2012, to withdraw the above-identified application from issue after payment of the issue fee.

The petition is **DISMISSED**.

37 CFR 1.313(c) provides that:

Once the issue fee has been paid, the application will not be withdrawn from issue upon petition by the applicant for any reason except:

(1) Unpatentability of one of more claims, which petition must be accompanied by an unequivocal statement that one or more claims are unpatentable, an amendment to such claim or claims, and an explanation as to how the amendment causes such claim or claims to be patentable;

(2) Consideration of a request for continued examination in compliance with 37 CFR 1.114; or

(3) Express abandonment of the application. Such express abandonment may be in favor of a continuing application.

Upon payment of the issue fee, an application will not be withdrawn from issue upon petition except for the reasons enumerated in 37 CFR 1.313(c). The circumstances of the above-identified application do not fall within any of those exceptions.

For the reason stated above, the petition under 37 CFR 1.313(c) cannot be granted.

Petitioner is reminded that the filing of any renewed petition to withdraw from issue may not be recognized or effective if not received by the appropriate deciding official in time to act prior to issuance. *Note* 37 CFR 1.313(d). It is recommended that the facsimile number listed below be used to file the renewed petition.

Further correspondence with respect to this matter should be addressed as follows:

By mail: Mail Stop PETITIONS
Commissioner for Patents
Post Office Box 1450
Alexandria, VA 22313-1450

By hand: Customer Service Window
Mail Stop Petitions
Randolph Building
401 Dulany Street
Alexandria, VA 22314

By fax: **(571) 273-0025**
Office of Petitions

Any questions concerning this matter may be directed to the undersigned at (571) 272-3208.

/KOC/
Karen Creasy
Petitions Examiner
Office of Petitions

UNITED STATES PATENT AND TRADEMARK OFFICE

Commissioner for Patents
United States Patent and Trademark Office
P.O. Box 1450
Alexandria, VA 22313-1450
www.uspto.gov

PHILIPS INTELLECTUAL PROPERTY & STANDARDS
P.O. BOX 3001
BRIARCLIFF MANOR NY 10510

In re Patent No. **7,891,852**	:
Issue Date: February 22, 2011	:
Application No. **11/252,421**	: DECISION DISMISSING
Filed: October 17, 2005	: PETITION UNDER
Attorney Docket No. 007108US1	: 37 CFR 1.313

This is a decision on the renewed petition filed February 3, 2012, to withdraw the above-identified application from issue after payment of the issue fee.

The petition is **DISMISSED AS MOOT.**

The petition is dismissed as moot because the application (11/252,421) issued into Patent No. **7,891,852** on **February 22, 2011.**

The decision mailed on February 1, 2012, should have indicated the above.

The request for continued examination (RCE) filed concurrently with the petition is improper in view of the issuance of this application into a patent and will not be processed. Accordingly, the $930.00 filing fee and the $130.00 petition fee submitted are unnecessary and will be refunded in due course.

The Information Disclosure Statement has been made of record in the file of the above-identified application without further consideration. *See* 37 CFR 1.97(i).

Telephone inquiries concerning this matter may be directed to the undersigned at (571) 272-3208.

/KOC/
Karen Creasy
Petitions Examiner
Office of Petitions

SPE RESPONSE FOR CERTIFICATE OF CORRECTION

DATE: ~~9-27-4~~ 12/21/2011 **Paper No.:** _____

TO SPE OF : ART UNIT 1623

SUBJECT : Request for Certificate of Correction for Appl. No.: 11/252760 Patent No.: 7144872

CofC mailroom date: 9-16-4

Please respond to this request for a certificate of correction within 7 days.

FOR IFW FILES: Should COFC be approved

Please review the requested changes/corrections as shown in the **COCIN** document(s) in the IFW application image. No new matter should be introduced, nor should the scope or meaning of the claims be changed.

Please complete the response (see below) and forward the completed response to scanning using document code **COCX**.

FOR PAPER FILES:

Please review the requested changes/corrections as shown in the attached certificate of correction. Please complete this form (see below) and forward it with the file to:

Certificates of Correction Branch (CofC)
Randolph Square – 9D10-A
Palm Location 7580

E Yang
Certificates of Correction Branch
703-756-1814 _____

Thank You For Your Assistance

The request for issuing the above-identified correction(s) is hereby:
Note your decision on the appropriate box.

- [x] **Approved** — **All** changes apply.
- [ ] **Approved in Part** — Specify below which changes **do not** apply.
- [ ] **Denied** — State the reasons for denial below.

Comments: The C & C filed 12/21/2011 is approved.

SPE — 1623 Art Unit

UNITED STATES PATENT AND TRADEMARK OFFICE

Commissioner for Patents
United States Patent and Trademark Office
P.O. Box 1450
Alexandria, VA 22313-1450
www.uspto.gov

Patent No. : 7,827,157 B2
Ser. No. : 11/252,872
Inventor(s) : Shilo et al.
Issued : Nov. 2, 2010
Title : METHOD AND SYSTEM FOR USE WITH THE INTERNET
Docket No. : CONDUIT 2
Re: Request for Certificate of Correction

Consideration has been given your request for the issuance of a certificate of correction for the above-identified patent under the provisions of Rule(s) 1.322 and/or 1.323.

Assignees' names and addresses (assignment data) printed in a patent, are based *solely* on information supplied in the appropriate space for identifying the assignment data, i.e., item 3 of the Issue Fee Transmittal Form PTOL-85B. Granting of a request under 37 CFR 3.81(b) is required to correct applicant's error providing ***incorrect or erroneous*** assignment data, *before* issuance of a Certificate of Correction, under 37 CFR 1.323 *(see Manual of Patent Examining Procedures (M.P.E.P) Chp.1400, sect. 1481).* This procedure is required *at any time after the issue fee is paid*, including after issuance of the patent.

In view of the foregoing, your request, in this matter, is hereby denied.

A request to correct the Assignee under 37 CFR 3.81(b) should include:

A. **the processing fee set forth in 37 CFR 1. 17(i) (currently $130);**
B. a statement that the failure to include the correct assignee name on the PTOL-85B was inadvertent; and
C. a copy of the Notice of Recordation of Assignment Document, reflecting the reel and frame number where the assignment(s) is recorded and/or reflecting proof of *the date* the assignment was submitted for recordation.

In the Request, Applicant(s) may request that the file be forwarded to Certificates of Correction Branch, for issuance of a Certificate of Correction, if the Request is granted.

Any request under 37 CFR 3.81(b) should be directed to the following address or facsimile number:

By mail: Mail Stop PETITIONS
Commissioner for Patents
Post Office Box 1450
Alexandria, VA 22313-1450

By hand:	Customer Service Window Mail Stop Petitions Randolph Building 401 Dulany Street Alexandria, VA 22314
By fax:	(703) 872-9306 ATTN: Office of Petitions

If a fee (currently $100) was previously submitted for consideration of a Request for Certificate of Correction, under CFR 1.323, to correct assignment data, no additional fee is required.

Ennis Young
For Mary Diggs
Decisions & Certificates
of Correction Branch
(571) **272-3435** or (703) 756-1814

UNITED STATES PATENT AND TRADEMARK OFFICE

Commissioner for Patents
United States Patent and Trademark Office
P.O. Box 1450
Alexandria, VA 22313-1450
www.uspto.gov

HENRY BRENDZEL
5 Gilbert Place
Millburn NJ 07041

MAILED
JUL 12 2011
OFFICE OF PETITIONS

In re Patent No. 7,827,157 :
Issue Date: November 2, 2010 :
Application No. 11/252,872 : DECISION ON PETITION
Filed: October 19, 2005 :
Attorney Docket No. CONDUIT 2 :

This is a decision on the Reconsideration Of Request For Certificate Of Correction, filed May 31, 2011, which is being treated as a Petition Under 37 CFR §3.81(b), to accept the omission of assignee's name. A completed Certificate of Correction Form (PTO/SB/44) was previously filed.

The petition under 37 CFR §3.81(b) is **GRANTED**.

Petitioner requests that the present Petition was submitted to add the omission of assignee's name on the previously submitted PTOL-85B and such error was inadvertent. Accordingly, petitioner urges that a Certificate of Correction (PTO/SB/44) be issued to add the omitted assignee's name to the Title Page of the Letters Patent.

37 CFR 3.81(b), effective June 25, 2004, reads:

> *After payment of the issue fee:* Any request for issuance of an application in the name of the assignee submitted after the date of payment of the issue fee, and any request for a patent to be corrected to state the name of the assignee, must state that the assignment was submitted for recordation as set forth in § 3.11 before issuance of the patent, and must include a request for a certificate of correction under § 1.323 of this chapter (accompanied by the fee set forth in § 1.20(a) and the processing fee set forth in § 1.17(i) of this chapter.

The requisite $100.00 fee (Fee Code 1811), as set forth under 37 CFR 1.20(a), has been submitted. However, the $130.00 processing fee (Fee Code 1464), as set forth under 37 CFR 1.17(i), is required. Therefore, since the petition was accompanied deposit account authorization, the fee has been charged. The Office assignment records are consistent with the requested correction. Accordingly, since the Petition complies with the provisions of 37 CFR §3.81(b), it is appropriate for the Office to issue a Certificate of Correction in accordance with the content of the Form (PTO/SB/44) that was previously filed.

Inquiries related this communication should be directed to the undersigned at (571)272-3213.

Any questions concerning the issuance of a Certificate of Correction should be directed to the Certificates of Correction Branch at (703)756-1814.

This matter is being referred to the Certificates of Correction Branch for processing of a Certificate of Correction in U.S. Patent No. 7,827,157.

Cheryl Gibson Baylor

Cheryl Gibson-Baylor
Petitions Examiner
Office of Petitions

UNITED STATES PATENT AND TRADEMARK OFFICE

Commissioner for Patents
United States Patent and Trademark Office
P.O. Box 1450
Alexandria, VA 22313-1450
www.uspto.gov

COBASYS, LLC
3740 LAPEER ROAD SOUTH
ORION MI 483

MAILED
OCT 13 2011
OFFICE OF PETITIONS

In re Application of	:	
Bourke et al.	:	
Application No. 11/252925	:	
Filing or 371(c) Date: 10/18/2005	:	ON PETITION
Attorney Docket Number:	:	
00500	:	

This is a decision on the Petition Under 37 CFR 1.137(b), filed September 20, 2011, to revive the above-identified application.

The petition is granted.

The above-identified application became abandoned for failure to timely and properly reply to the non-final Office action, mailed February 1, 2011. The Office action set a three (3) month period for reply from the mail date of the Office action. Extensions of time were available under 37 CFR 1.136(a). No complete and proper reply having been received, the application became abandoned on May 2, 2011.

The petition satisfies the conditions for revival pursuant to the provisions of 37 CFR 1.137(b) in that (1) the reply in the form of an Amendment is filed with the present petition; (2) the petition fee; and (3) the required statement of unintentional delay. Accordingly, the reply is accepted as having been unintentionally delayed.

The application file does not indicate a change of address has been filed in this case, although the address given on the petition differs from the address of record. A change of address should be filed in this case in accordance with MPEP 601.03. A courtesy copy of this decision is being mailed to the address noted on the petition. However, until otherwise instructed, all future correspondence regarding this application will be mailed solely to the address of record.

This application is being referred to Technology Center Art Unit 1732 for processing of the Amendment filed with the petition in due course.

Telephone inquiries concerning this decision should be directed to the undersigned at (571) 272-3232.

/DLW/

Derek L. Woods
Attorney
Office of Petitions

CC: MICHAEL D. WIGGINS
HARNESS, DICKEY & PIERCE, P.L.C.
P.O. BOX 828
BLOOMFIELD HILLS, MI 48308

UNITED STATES PATENT AND TRADEMARK OFFICE

Commissioner for Patents
United States Patent and Trademark Office
P.O. Box 1450
Alexandria, VA 22313-1450
www.uspto.gov

CANTOR COLBURN, LLP
20 CHURCH STREET
22ND FLOOR
HARTFORD, CT 06103

MAILED
DEC 16 2010
OFFICE OF PETITIONS

In re Application of	:	
John Pottage	:	
Application No. 11/252,938	:	DECISION GRANTING PETITION
Filed: October 18, 2005	:	UNDER 37 CFR 1.313(c)(2)
Attorney Docket No. API001US2	:	

This is a decision on the renewed petition under 37 CFR 1.313(c)(2), filed December 16, 2010, to withdraw the above-identified application from issue after payment of the issue fee.

The petition is **GRANTED**.

The above-identified application is withdrawn from issue for consideration of a submission under 37 CFR 1.114 (request for continued examination). *See* 37 CFR 1.313(c)(2).

Petitioner is advised that the issue fee paid on November 30, 2010 cannot be refunded. If, however, this application is again allowed, petitioner may request that it be applied towards the issue fee required by the new Notice of Allowance.[1]

Telephone inquiries regarding this decision should be directed to undersigned at (571) 272-1642. All other inquiries regarding the examination or status of this application should be directed to the Technology Center.

This application is being referred to Technology Center AU 1624 for processing of the request for continued examination under 37 CFR 1.114 and for consideration of the concurrently filed information disclosure statement.

/AMW/
April M. Wise
Petitions Examiner
Office of Petitions

---

[1] *The request to apply the issue fee to the new Notice may be satisfied by completing and returning the new Part B – Fee(s) Transmittal Form (along with any balance due at the time of submission). Petitioner is advised that the Issue Fee Transmittal Form* ***must*** *be completed and timely submitted to avoid abandonment of the application.*

SPE RESPONSE FOR CERTIFICATE OF CORRECTION

Paper No.:20111107

DATE : November 07, 2011

TO SPE OF : ART UNIT 1621

SUBJECT : Request for Certificate of Correction on Patent No.: 7405314

A response is requested with respect to the accompanying request for a certificate of correction.

Please complete this form and return with file, within **7** days to:
Certificates of Correction Branch - ST (South Tower) 9A22
Palm location **7590** - Tel. No. (703) 305-8309

With respect to the change(s) requested, correcting Office and/or Applicant's errors, should the patent read as shown in the certificate of correction? No new matter should be introduced, nor should the scope or meaning of the claims be changed.

Thank You For Your Assistance **Certificates of Correction Branch**

The request for issuing the above-identified correction(s) is hereby:

Note your decision on the appropriated box.

☐ **Approved** All changes apply.

☐ **Approved in Part** Specify below which changes **do not** apply.

☒ **Denied** State the reasons for denial below.

Comments:

Claim 20 is currently directed to a compound and further recites that the compound is capable of producing crystals having a defined melting point. The patented claim covers the compound regardless of whether it is in a crystalline form, as the melting point of the crystals that it might produce is inherent to the compound. In contrast, a claim directed to a crystalline form of a compound is limited to a special physical form and must be examined for compliance with the requirements of 112.

/DANIEL SULLIVAN/
Supervisory Patent Examiner.Art Unit 1621

UNITED STATES PATENT AND TRADEMARK OFFICE

Commissioner for Patents
United States Patent and Trademark Office
P.O. Box 1450
Alexandria, VA 22313-1450
www.uspto.gov

WOOD, HERRON & EVANS, LLP
2700 CAREW TOWER
441 VINE STREET
CINCINNATI OH 45202

MAILED
JUL 29 2011
OFFICE OF PETITIONS

In re Application of
Melbourne H. Sann
Application No. 11/253,043
Filed: October 18, 2005
Attorney Docket No: MHS-04A

ON PETITION

This is a decision on the petition filed June 22, 2011, under 37 CFR 1.182, for withdrawal of the terminal disclaimer filed September 24, 2009.

The petition is **DISMISSED**.

The examiner responsible for the above-identified application has indicated that the terminal disclaimer filed September 24, 2009 is still required. Accordingly, the terminal disclaimer can not be withdrawn.

The petition fee in the amount of $400.00 has been applied.

This matter is being referred to Technology Center 1791 for further examination in due course.

Telephone inquiries concerning this matter may be directed to the undersigned Petitions Attorney at (571) 272-3212.

Patricia Faison-Ball

Patricia Faison-Ball
Senior Petitions Attorney
Office of Petitions

Issue Classification	Application/Control No.	Applicant(s)/Patent under Reexamination	
	11/253,051	NILSEN ET AL.	
	Examiner	Art Unit	
	FRANK W. LU	1634	

ISSUE CLASSIFICATION

ORIGINAL						CROSS REFERENCE(S)							
CLASS				SUBCLASS	CLASS	SUBCLASS (ONE SUBCLASS PER BLOCK)							
435				6	435	7.32	91.1	242					
INTERNATIONAL CLASSIFICATION													
C	1	2	Q	1/68									
G	0	1	N	33/554									
G	0	1	N	33/569									
C	1	2	P	19/34									
C	1	2	N	3/00									

(Assistant Examiner) (Date)	/Frank W Lu/ 9/27/2010	Total Claims Allowed: 12
(Legal Instruments Examiner) (Date)	(Primary Examiner) (Date)	O.G. Print Claim(s): 1 — O.G. Print Fig.: None

☐ Claims renumbered in the same order as presented by applicant ☐ CPA ☐ T.D. ☐ R.1.47

Final	Original	Final	Original	Final	Original	Final	Original	Final	Original	Final	Original	Final	Original
	1		31		61		91		121		151		181
	2		32	3	62		92		122		152		182
	3		33	9	63		93		123		153		183
	4		34	4	64		94		124		154		184
	5		35	10	65		95		125		155		185
	6		36	5	66		96		126		156		186
	7		37	11	67		97		127		157		187
	8		38	6	68		98		128		158		188
	9		39	12	69		99		129		159		189
	10		40		70		100		130		160		190
	11		41		71		101		131		161		191
	12		42		72		102		132		162		192
	13		43		73		103		133		163		193
	14		44		74		104		134		164		194
	15		45		75		105		135		165		195
	16		46		76		106		136		166		196
	17		47		77		107		137		167		197
	18		48		78		108		138		168		198
	19		49		79		109		139		169		199
	20		50		80		110		140		170		200
	21	1	51		81		111		141		171		201
	22		52		82		112		142		172		202
	23		53		83		113		143		173		203
	24	7	54		84		114		144		174		204
	25		55		85		115		145		175		205
	26		56		86		116		146		176		206
	27		57		87		117		147		177		207
	28		58		88		118		148		178		208
	29	2	59		89		119		149		179		209
	30	8	60		90		120		150		180		210

UNITED STATES PATENT AND TRADEMARK OFFICE

UNITED STATES DEPARTMENT OF COMMERCE
United States Patent and Trademark Office
Address: COMMISSIONER FOR PATENTS
P.O. Box 1450
Alexandria, Virginia 22313-1450
www.uspto.gov

BACHMAN & LAPOINTE, P.C. (P&W)
900 CHAPEL STREET
SUITE 1201
NEW HAVEN, CT 06510-2802

Mail Date: 08/02/2010

Applicant	: Todd Davis	: DECISION ON REQUEST FOR
Patent Number	: 7648143	: RECALCULATION of PATENT
Issue Date	: 01/19/2010	: TERM ADJUSTMENT IN VIEW
Application No	: 11/253,248	: OF WYETH AND NOTICE OF INTENT TO
Filed	: 10/18/2005	: ISSUE CERTIFICATE OF CORRECTION
		:

The Request for Recalculation is **GRANTED** to the extent indicated.

The patent term adjustment has been determined to be **48** days. The USPTO will *sua sponte* issue a certificate of correction reflecting the amount of PTA days determined by the recalculation.

Prior to the issuance of the certificate of correction, the USPTO will afford patentee an opportunity to be heard and request reconsideration. Accordingly, patentee has **one month or thirty (30) days**, whichever is longer, to file a request for reconsideration of this patent term adjustment calculation. See 35 U.S.C. 154(b)(3)(B)(ii) and 37 CFR 1.322(a)(4). No extensions of time will be granted under 37 CFR 1.136.

Patentee should use document code PET.OP if electronically filing a request for reconsideration of this patent term adjustment calculation. The patentee must also include the information required by 37 CFR 1.705(b)(2) and the fee required by 37 CFR 1.18(e). If patentee does not file a timely request for reconsideration of this patent term adjustment calculation including the information required by 37 CFR 1.705(b)(2) and the fee required by 37 CFR 1.18(e), the USPTO will issue a certificate of correction reflecting the PTA determination noted above.

Patentee should be aware that in order to preserve the right to review in the United States District Court for the District of Columbia of the USPTO patent term adjustment determination, patentee must ensure that he or she also take the steps required under 35 U.S.C. 154(b)(4)(A) in a timely manner. Nothing in the request for recalculation should be construed as providing an alternative time frame for commencing a civil action under 35 U.S.C. 154(b)(4)(A).

Any questions concerning this decision should be directed to the Office of Patent Legal Administration at 571-272-7702.

UNITED STATES PATENT AND TRADEMARK OFFICE

UNITED STATES DEPARTMENT OF COMMERCE
United States Patent and Trademark Office
Address: COMMISSIONER FOR PATENTS
P.O. Box 1450
Alexandria, Virginia 22313-1450
www.uspto.gov

APPLICATION NO.	FILING DATE	FIRST NAMED INVENTOR	ATTORNEY DOCKET NO.	CONFIRMATION NO.
11/253,262	10/18/2005	Thomas A. Szyperski	19226/2431 (R-5958)	1861

7590 02/23/2011

LeClairRyan
290 Linden Oaks
Suite 310
Rochester, NY 14625

EXAMINER
NEGIN, RUSSELL SCOTT

ART UNIT	PAPER NUMBER
1631	

MAIL DATE	DELIVERY MODE
02/23/2011	PAPER

ACKNOWLEDGEMENT OF REQUEST

Notice of Allowance/Allowability Mailed

The request to print a color drawing reference as the first paragraph in the portion of the specification containing a brief description of the drawings as required by 37 CFR 1.84 and MPEP § 608.02 has been received by the United States Patent and Trademark Office and will be entered into the specification.

571-272-4200 or 1-888-786-0101
Application Assistance Unit
Office of Data Management

FORM PTOM327-5 (Rev. 02/08)

UNITED STATES PATENT AND TRADEMARK OFFICE

Commissioner for Patents
United States Patent and Trademark Office
P.O. Box 1450
Alexandria, VA 22313-1450
www.uspto.gov

February 22, 2011

LeClairRyan
290 Linden Oaks
Suite 310
Rochester NY 14625

In re Application of	:	
Thomas A. Szyperski, et al	:	**DECISION ON PETITION**
Application No. 11253262	:	
Filed: 10/18/2005	:	***ACCEPTANCE OF COLOR***
Attorney Docket No. **19226/2431 (R-5958)**	:	***DRAWINGS***

This is a decision on the Petition to Accept Color Drawings under 37 C.F.R 1.84 (a) (2), received in the United States Patent and Trademark Office (USPTO) October 18, 2005.

The petition is **GRANTED**.

A grantable petition under 37 C.F.R. 1.84(a) (2) must be accompanied by the following.

1. The fee set forth under 37 C.F.R. 1.17(h),
2. Three (3) sets of the color drawings in question, or (1) set if filed via EFS, and
3. The specification contains appropriate language referring to the color drawings as the first paragraph in that portion of the specification relating to the brief description of the drawings.

The petition was accompanied by all of the required fees and drawings. The specification contains the appropriate language. Therefore, the petition is GRANTED.

Telephone inquires relating to this decision may be directed to the undersigned in the Office of Data Management at 571-272-4200.

/Laura Feldman/
Quality Control Specialist
Office of Data Management
Publications Branch

UNITED STATES PATENT AND TRADEMARK OFFICE

Commissioner for Patents
United States Patent and Trademark Office
P.O. Box 1450
Alexandria, VA 22313-1450
www.uspto.gov

MCANDREWS HELD & MALLOY, LTD
500 WEST MADISON STREET
SUITE 3400
CHICAGO, IL 60661

MAILED

DEC 15 2010

OFFICE OF PETITIONS

In re Application of Aloni et al. :
Application No. 11/253,394 :
Filing Date: July 30, 2010 :
Attorney Docket No. 17062US02 :

On Application For
Patent Term Adjustment

This is in response to the paper filed July 30, 2010, which is being treated as a petition under 37 C.F.R. § 1.705(b). Applicants submit the correct patent term adjustment to be indicated on the patent is eight hundred seventeen (817) days, not six hundred thirty-one (631) days as calculated by the Office as of the mailing of the initial determination of patent term adjustment. Applicants request this correction solely on the basis that the Office will take in excess of three years to issue this patent.

As the instant application for patent term adjustment requests reconsideration of the patent term adjustment as it relates to the Office's failure to issue the patent within 3 years of the filing date, the application for patent term adjustment under 37 CFR 1.705(b) is **DISMISSED as PREMATURE**.

Knowledge of the actual date the patent issues is required to calculate the amount, if any, of additional patent term patentee is entitled to for Office failure to issue the patent within 3 years. See 37 CFR 1.702(b). (This is true even where a request for continued examination (RCE) was filed). The computer will not undertake the § 1.702(b) calculation until the actual date of issuance of the patent has been determined. Likewise, the computer will not calculate any further Office delay under § 1.702(a)(4) or applicant delay under § 1.704(c)(10) until the actual date of issuance of the patent has been determined. As such, the Office can not make a determination on the correctness of the patent term adjustment until the patent has issued.

Requesting reconsideration of the patent term adjustment to be indicated on the patent under 37 CFR 1.705(b) based on the initial determination of patent term adjustment and a projected issuance date of the patent (or even the filing date of the request for continued examination) is premature. Accordingly, it is appropriate to dismiss as premature such a request.

Rather than file an application for patent term adjustment under 37 CFR 1.705(b) contesting the 37 CFR 1.702(b) calculation at the time of the mailing of the notice of allowance, an applicant

may wait until the time of the issuance of the patent and file a request for reconsideration of the patent term adjustment pursuant to 37 CFR 1.705(d). As the USPTO does not calculate the amount of time earned pursuant to 37 CFR 1.702(b) until the time of the issuance of the patent, the Office will consider any request for reconsideration of the patent term adjustment due to an error in the calculation of 37 CFR 1.702(b) to be timely if the request for reconsideration is filed within two months of the issuance of the patent. However, as to all other bases for contesting the initial determination of patent term adjustment received with the notice of allowance, applicant must timely file an application for patent term adjustment prior to the payment of the issue fee.[1]

The Office acknowledges submission of the $200.00 fee set forth in 37 CFR 1.18(e) for consideration of the application for patent term adjustment under 37 CFR 1.705(b).

Any request for reconsideration of the patent term adjustment indicated on the patent must be timely filed within 2 months after issuance pursuant to 37 CFR 1.705(d) and must include payment of the required fee under 37 CFR 1.18(e).

The Office of Data Management has been advised of this decision. This application is being referred to the Office of Data Management for issuance of the patent.

Telephone inquiries regarding this communication should be directed to Petitions Attorney Steven Brantley at (571) 272-3203.

Charles Steven Brantley
Senior Petitions Attorney
Office of Petitions

[1] For example, if applicant disputes both the calculation of patent term adjustment under 37 CFR 1.702(a)(1) for Office failure to mail a first Office action or notice of allowance not later than fourteen months after the date on which the application was filed and under 37 CFR 1.702(b) for Office failure to issue a patent within three years of the actual filing date of the application, then applicant must still timely file an application for patent term adjustment prior to the payment of the issue fee to contest the calculation of Office delay in issuing a first Office action or notice of allowance. See 37 CFR 1.705(b) and 35 U.S.C. 154(b)(3)(B). A dispute as to the calculation of the §1.702(a)(1) period raised on request for reconsideration of patent term adjustment under 37 CFR 1.705(d) will be dismissed as untimely filed.

UNITED STATES PATENT AND TRADEMARK OFFICE

Commissioner for Patents
United States Patent and Trademark Office
P.O. Box 1450
Alexandria, VA 22313-1450
www.uspto.gov

MCANDREWS HELD & MALLOY, LTD
500 WEST MADISON STREET
SUITE 3400
CHICAGO IL 60661

MAILED

JAN 28 2011

OFFICE OF PETITIONS

In re Patent No.7,620,057 :
Aloni, et al. :
Issue Date : November 17, 2009 :
Application No. 11/253,397 :
Filed: October 18, 2005 :
Attorney Docket No. **17089US02** :

DECISION FOR REQUEST FOR RECONSIDERATION OF PATENT TERM ADJUSTMENT

This is a decision on the "Request for Reconsideration of USPTO Recalculation of Patent Term Adjustment in View of *Wyeth*," filed May 24, 2010. Patentees request that the patent term adjustment indicated on the face of the Letters of Patent be corrected from seven hundred and forty-one (741) days to seven hundred and forty-two (742) days.

The request for reconsideration of the patent term adjustment under 37 CFR 1.705(d) is **DISMISSED**.

Patentee's are given TWO (2) MONTHS from the mail date of this decision to respond. No extension of time will be granted under 37 CFR 1.136.

On November 17, 2009, the above-identified application matured into U.S. Patent No. 7,620,057, with a revised patent term of 612 days. A Request for Recalculation of Patent Term Adjustment in View of Wyeth was filed on April 15, 2010. A decision was mailed on May 5, 2010, indicating that the patent term adjustment had been determined to be seven hundred and forty-one (741) days. The instant request for reconsideration filed May 24, 2010, was timely filed within one month of the date the petition recalculation decision was mailed.

As the period from the filing date of the request for continued examination (RCE) to the issue date of the patent is not included in the "B" delay period, the over three year period begins on October 19, 2008, and ends on February 24, 2009, the day before the RCE was filed, and is 129 days.

In view thereof, the patent term adjustment of 741 days indicated in the patent is correct.

Nothing in this decision shall be construed as a waiver of the requirement of 35 U.S.C. 154(b)(4) that any civil action by an applicant dissatisfied with a determination made by the Director under 35 U.S.C. 154(b)(3) be filed in the United States District Court for the District of Columbia within 180 days after the grant of the patent.

The Office acknowledges submission of the $200.00 fee set forth in 37 CFR 1.18(e). No additional fees are required.

Further correspondence with respect to this decision should be addressed as follows:

By Mail: Mail Stop Petition
Commissioner for Patents
PO Box 1450
Alexandria, VA 22313-1450

By FAX: (571) 273-8300
ATTN: Office of Petitions

By Hand: Customer Service Window
Randolph Building
401 Dulany Street
Alexandria, VA 22314

Telephone inquiries specific to this matter should be directed to the undersigned at (571) 272-3222.

/Kenya A. McLaughlin/

Kenya A. McLaughlin
Petitions Attorney
Office of Petitions

UNITED STATES PATENT AND TRADEMARK OFFICE

UNITED STATES DEPARTMENT OF COMMERCE
United States Patent and Trademark Office
Address: COMMISSIONER FOR PATENTS
P.O. Box 1450
Alexandria, Virginia 22313-1450
www.uspto.gov

APPLICATION NO.	FILING DATE	FIRST NAMED INVENTOR	ATTORNEY DOCKET NO.	CONFIRMATION NO.
11/253,572	10/20/2005	Choon-Kyung Kim	P57623	3316

8439 7590 10/19/2010
ROBERT E. BUSHNELL & LAW FIRM
2029 K STREET NW
SUITE 600
WASHINGTON, DC 20006-1004

EXAMINER
PALABRICA, RICARDO J

ART UNIT	PAPER NUMBER
3663	

NOTIFICATION DATE	DELIVERY MODE
10/19/2010	ELECTRONIC

Please find below and/or attached an Office communication concerning this application or proceeding.

The time period for reply, if any, is set in the attached communication.

Notice of the Office communication was sent electronically on above-indicated "Notification Date" to the following e-mail address(es):

rebushnell@aol.com
mail@rebushnell.com
info@rebushnell.com

UNITED STATES PATENT AND TRADEMARK OFFICE

Commissioner for Patents
United States Patent and Trademark Office
P.O. Box 1450
Alexandria, VA 22313-1450
www.uspto.gov

OCT 18 2010

ROBERT E. BUSHNELL & LAW FIRM
2029 K STREET NW
SUITE 600
WASHINGTON DC 20006-1004

In re Application of: Choon-Kyung KIM	: DECISION ON PETITION
Appl. No. 11/253,572	: FOR SUPERVISORY REVIEW
Filed: October 20, 2005	: UNDER 37 CFR 1.181
For: METHOD FOR DETECTING	:
A FAULT OF A POWER MODULE	:
FOR A CONTROL SYSTEM OF A	:
CONTROL ROD DRIVE MECHANISM	:
OF A NUCLEAR REACTOR	:

This is a decision on applicant's petition under 37 CFR 1.181 filed on August 24, 2009 to request an affidavit in support of the various arguments set forth by the examiner in the final Office action with respect to the objection to the specification for non-enablement, and the rejections of the claims under 35 USC 112, first paragraph and second paragraph.

The petition is **DISMISSED AS MOOT**.

Applicant alleges that in the final Office action dated June 24, 2009 the examiner must provide documentation or affidavit to support his various assertions such as referring to the items in section 3-5 of the Office action dated January 12, 2009 as being "well known and obvious to an artisan", "one of ordinary skill in the art would not be able to put into practice the claimed invention without undue experimentation" at the end of the Office action, "claims are incomplete because they do not recite any corrective step(s) to be taken following detection of a fault", and "without such correction, the method would not achieve the intended utility of the claimed method" with respect to the rejections under 35 USC 112 second paragraph and 35 USC 101.

The record reflects that the examiner issued a final Office action on June 24, 2009. Applicant filed an amendment after final and the instant petition on August 24, 2009. The examiner mailed an advisory action on December 30, 2009 and held a telephonic telephone interview with Mr. Bushnell, applicant's attorney, on January 6, 2010. The application became abandoned on February 19, 2010 for failing to timely file a proper reply to the final Office action of June 24, 2009.

In view of the fact that the application has been abandoned, the issues raised in the petition are rendered moot.

Any questions regarding this decision should be directed to Supervisory Patent Examiner Jack Keith at (571) 272-6878.

Kathy Matecki, Director
Patent Technology Center 3600
(571) 272-5250

lm: 9/20/2010

LM

UNITED STATES PATENT AND TRADEMARK OFFICE

Commissioner for Patents
United States Patent and Trademark Office
P.O. Box 1450
Alexandria, VA 22313-1450
www.uspto.gov

MAILED
MAR 23 2012
OFFICE OF PETITIONS

BUCHANAN, INGERSOLL & ROONEY PC
POST OFFICE BOX 1404
ALEXANDRIA VA 22313-1404

In re Application of Matsuhara Application No. 11/253,589 Filed: October 20, 2005 Attorney Docket No.: 1009683-000556 Title: IMAGE PROCESSING SYSTEM AND IMAGE PROCESSING DEVICE IMPLEMENTING A SPECIFIC IMAGE PROCESSING FUNCTION FOR EACH USER AS WELL AS A COMPUTER PROGRAM PRODUCT FOR THE SAME	DECISION ON PETITION PURSUANT TO 37 C.F.R. § 1.182

This is a decision on the "PETIITON UNDER 37 §1.182 TO WITHDRAW APPEAL BRIEF, filed February 15, 2012, requesting the withdrawal of a preveniently submitted Appeal Brief.

Receipt of the $400 fee is acknowledged.

On August 17, 2011, the Office mailed a final Office action. On December 14, 2011, Applicant filed a Notice of Appeal along with the associated fee, a one-month extension of time so as to make timely the submission, and a Request for Pre-Appeal Brief Review.

On February 14, 2012, both an Appeal Brief and the associated fee were submitted to the Office. With this petition, Petitioner seeks the withdrawal of the Appeal Brief, "so that the panel can confer and issue a decision on the Pre-Appeal Request for Review."

A review of the electronic record shows that on February 22, 2012, subsequent to the filing of this petition, a Notice of Panel Decision from Pre-Appeal Brief Review was mailed, indicating that the application remained under appeal. The notice indicated that an Appeal Brief was due by March 22, 2012.

It follows this petition is **DISMISSED as moot.**

The Technology Center will be notified of this decision, and jurisdiction over this application is transferred to the Technology Center, so that the application may receive further processing. The Technology Center's support staff will notify the Examiner of this decision, so that the Appeal Brief that was received on February 14, 2012 can be processed.

The Technology Center will note that in light of the Appeal Brief filed on February 14, 2012, there is no need for Applicant to provide a response to the Notice of Panel Decision from Pre-Appeal Brief Review. Accordingly, the Technology Center should not mail a notice of abandonment for failure to provide a response to the Notice of Panel Decision from Pre-Appeal Brief Review.

Telephone inquiries regarding *this decision* should be directed to the undersigned at (571) 272-3225.[1] All other inquiries concerning examination procedures or status of the application should be directed to the Technology Center.

Paul Shanoski
Senior Attorney
Office of Petitions

1 Petitioner will note that all practice before the Office should be in writing, and the action of the Office will be based exclusively on the written record in the Office. See 37 C.F.R. § 1.2. As such, Petitioner is reminded that no telephone discussion may be controlling or considered authority for Petitioner's further action(s).

UNITED STATES PATENT AND TRADEMARK OFFICE

Commissioner for Patents
United States Patent and Trademark Office
P.O. Box 1450
Alexandria, VA 22313-1450
www.uspto.gov

TEXAS INSTRUMENTS INCORPORATED
P O BOX 655474, M/S 3999
DALLAS TX 75265

MAILED
NOV 17 2011
OFFICE OF PETITIONS

In re Application of
Walker et al
Application No. 11/253,771
Filed: October 18, 2005
Attorney Docket No. TI-39444

DECISION ON PETITION

This is a decision on the petition, filed October 26, 2011, which is being treated as a petition under 37 CFR 1.181 (no fee) requesting withdrawal of the holding of abandonment in the above-identified application.

The petition is **GRANTED**.

This application was held abandoned for failure to file a reply to the final Office action of December 22, 2010, which set a three (3) month shortened statutory period for reply. A Notice of Appeal, accompanying fee of $540.00 and two month extension of time pursuant to 37 CFR 1.136(a) was obtained. A Notice of Abandonment was mailed September 20, 2011.

Petitioner maintains that based on the Notice of Appeal filed on May 23, 2011, the period for filing an appeal brief or some other satisfactory paper expires December 23, 2011.

A review of the record shows that the Notice of Abandonment held the application abandoned for failure to file a response to the final Office action of December 22, 2010. However, a review of the record shows that a Notice of Appeal (and fee) and two month extension of time were provided on May 23, 2011. Further, the maximum extendable response period for submitting a response to the Notice of Appeal does not expire until December 23, 2011. As such the application was prematurely held abandoned.

It is noted an appeal brief and a three month extension of time fee were submitted on October 24, 2011.

As such, the Notice of Abandonment is hereby vacated and the holding of abandonment is withdrawn.

The application is being referred to Art Unit 2625 for further processing.

Telephone inquiries concerning this matter should be directed to the undersigned at (571) 272-3215.

Charlema Grant
Petitions Attorney
Office of Petitions

UNITED STATES PATENT AND TRADEMARK OFFICE

Commissioner for Patents
United States Patent and Trademark Office
P.O. Box 1450
Alexandria, VA 22313-1450
www.uspto.gov

YAHOO! INC.
C/O FROMMER LAWRENCE & HAUG LLP
745 FIFTH AVENUE
NEW YORK NY 10151

MAILED

JAN 11 2011

OFFICE OF PETITIONS

In re Application of	:	
ROSEN, James S.	:	
Application No. 11/253,847	:	DECISION ON PETITION
Filed: October 18, 2005	:	TO WITHDRAW
Attorney Docket No. **1361032-2168.1**	:	FROM RECORD

This is a decision on the Request to Withdraw as attorney or agent of record under 37 C.F.R. § 1.36(b), filed December 23, 2010.

The request is **APPROVED**.

A grantable request to withdraw as attorney/agent of record must be signed by every attorney/agent seeking to withdraw or contain a clear indication that one attorney is signing on behalf of another/others. The Office requires the practitioner(s) requesting withdrawal to certify that he, she, or they have: (1) given reasonable notice to the client, prior to the expiration of the response period, that the practitioner(s) intends to withdraw from employment; (2) delivered to the client or a duly authorized representative of the client all papers and property (including funds) to which the client is entitled; and (3) notified the client of any responses that may be due and the time frame within which the client must respond, pursuant 37 CFR 10.40(c).

The request was signed by John Branch on behalf of all attorneys of record who are associated with customer No. 38880. All attorneys/agents associated with the Customer Number 38880 have been withdrawn. Applicant is reminded that there is no attorney of record at this time.

The correspondence address of record has been changed and the new correspondence address is the address indicated below.

Telephone inquiries concerning this decision should be directed to Tredelle Jackson at 571-272-2783.

/Tredelle D. Jackson/
Paralegal Specialist
Office of Petitions

cc: **YAHOO! INC.**
701 FIRST AVENUE, BUILDING D
ATTN: CYNTHIA READER
SUNNYVALE CA 94089

UNITED STATES PATENT AND TRADEMARK OFFICE

Commissioner for Patents
United States Patent and Trademark Office
P.O. Box 1450
Alexandria, VA 22313-1450
www.uspto.gov

Yahoo! Inc.
c/o Frommer Lawrence & Haug, LLP
745 Fifth Avenue
New York, NY 10151

MAILED

JAN 24 2011

OFFICE OF PETITIONS

In re Application of	:	
James S. Rosen	:	
Application No. 11/253,848	:	DECISION ON PETITION
Filed: October 18, 2005	:	TO WITHDRAW
Attorney Docket No. 1361032-2168.2	:	FROM RECORD
	:	

This is a decision on the Request to Withdraw as attorney or agent of record under 37 C.F.R. § 1.36(b), filed December 23, 2010.

The request is **APPROVED**.

A grantable request to withdraw as attorney/agent of record must be signed by every attorney/agent seeking to withdraw or contain a clear indication that one attorney is signing on behalf of another/others. A request to withdraw will not be approved unless at least 30 (thirty) days would remain between the date of approval and the later of the expiration date of a time to file a response or the expiration date of the maximum time period which can be extended under 37 C.F.R. § 1.136(a).

The request was signed by John W. Branch on behalf of all attorneys/agents of record. All attorneys/agents of record have been withdrawn.

All future correspondence will be directed to the address of record, which is copied below.

Telephone inquiries concerning this decision should be directed to Kimberly Inabinet at 571-272-4618.

/Kimberly Inabinet/

Kimberly Inabinet
Petitions Examiner
Office of Petitions

cc: Yahoo! Inc. c/o Greenberg Traurig, LLP
Met Life Building
200 Park Avenue
New York, NY 10166

UNITED STATES PATENT AND TRADEMARK OFFICE

UNITED STATES DEPARTMENT OF COMMERCE
United States Patent and Trademark Office
Address: COMMISSIONER FOR PATENTS
P.O. Box 1450
Alexandria, Virginia 22313-1450
www.uspto.gov

APPLICATION NUMBER	FILING OR 371(C) DATE	FIRST NAMED APPLICANT	ATTY. DOCKET NO./TITLE
11/253,848	10/18/2005	James S. Rosen	1361032-2168.2

CONFIRMATION NO. 2039

POWER OF ATTORNEY NOTICE

38880
Yahoo! Inc.
c/o Frommer Lawrence & Haug LLP
745 Fifth Avenue
NEW YORK, NY 10151

OC000000045637544

Date Mailed: 01/25/2011

NOTICE REGARDING CHANGE OF POWER OF ATTORNEY

This is in response to the Power of Attorney filed 12/23/2010.

- The withdrawal as attorney in this application has been accepted. Future correspondence will be mailed to the new address of record. 37 CFR 1.33.

/kainabinet/

Office of Data Management, Application Assistance Unit (571) 272-4000, or (571) 272-4200, or 1-888-786-0101

UNITED STATES PATENT AND TRADEMARK OFFICE

UNITED STATES DEPARTMENT OF COMMERCE
United States Patent and Trademark Office
Address: COMMISSIONER FOR PATENTS
P.O. Box 1450
Alexandria, Virginia 22313-1450
www.uspto.gov

APPLICATION NO.	FILING DATE	FIRST NAMED INVENTOR	ATTORNEY DOCKET NO.	CONFIRMATION NO.
11/253,872	10/19/2005	Tokimi Nago	03-744-2	4015

34704 7590 12/13/2011
BACHMAN & LAPOINTE, P.C.
900 CHAPEL STREET
SUITE 1201
NEW HAVEN, CT 06510

EXAMINER
BEAUCHAINE, MARK J

ART UNIT	PAPER NUMBER
3653	

MAIL DATE	DELIVERY MODE
12/13/2011	PAPER

Please find below and/or attached an Office communication concerning this application or proceeding.

The time period for reply, if any, is set in the attached communication.

UNITED STATES PATENT AND TRADEMARK OFFICE

Commissioner for Patents
United States Patent and Trademark Office
P.O. Box 1450
Alexandria, VA 22313-1450
www.uspto.gov

DEC 13 2011

Gregory Lapointe
BACHMAN & LAPOINTE, P.C.
900 Chapel Street
Suite 1201
New Haven, CT 06510

November 30, 2011

In re Application of:
Tokimi Nago et al.
Application No. 11/253,872
Filed: October 19, 2005
For: OPTICAL SENSING DEVICE FOR DETECTING OPTICAL FEATURES OF VALUABLE PAPERS

DECISION ON PETITION UNDER 37 CFR 1.181

This is in response to the petition filed on June 4, 2008 under 37 CFR 1.181 requesting that the Information Disclosure Statement (IDS) filed June 4, 2008 be considered.

The petition is DISMISSED as being moot.

A review of the record reveals that applicants filed an IDS on June 4, 2008 concurrently with a petition requesting that the IDS be considered. The examiner initially did not acknowledge or indicate if the IDS was considered. The application was subsequently returned from The Board of Patent Appeals and Interferences on May 2, 2009 to consider the IDS from June 4, 2008 along with other IDS from April 23, 2008 and March 23, 2009.

In response, the examiner corrected the oversight and considered the IDSes in a communication dated June 4, 2009. Therefore, applicant's requested relief has been given.

Telephone inquiries should be directed to Stefanos Karmis, Supervisory Patent Examiner, at (571) 272-6744.

Dave Talbott, Director
Patent Technology Center 3600
(571) 272-5150

dt/sk: 12/7/11
LM

UNITED STATES DEPARTMENT OF COMMERCE
Patent and Trademark Office
ASSISTANT SECRETARY OF COMMERCE AND
COMMISSIONER OF PATENTS AND TRADEMARKS
P.O. BOX 1450
Alexandria, Va 22313- 1450
www.uspto.gov.

DATE: June 15, 2011
Patent No: 7702889
Applicant: Codrescu et al
Issued: 04/20/10

Request for consideration of Certificate of Correction:

Consideration has been given for your request for the certificate of correction for the above-identified patent under the provisions of Rules 1.322.

Respecting the alleged errors in column(s)9, 10 and 12 are printed in accordance with the record. Therefore, no correction(s) are in order here under United States Codes (U.S.C.) 254 Code of Federal Regulation (C.F.R.) 1.322/1.323.

In view of the foregoing, your request is hereby denied.

RoChaun Johnson for
Mary Diggs, Supervisor
Decisions and Certificates of Correction
(571) 272-0470

QUALCOMM INC.
ATTN: PATENT DEPARTMENT
5775 NIREGIYSE DRIVE
SANDIEGO, CALIFORNIA 92121-1714

SPE RESPONSE FOR CERTIFICATE OF CORRECTION

DATE : January 9, 2011

TO SPE OF : ART UNIT 2813

SUBJECT : Request for Certificate of Correction for Appl. No.: 11/254096, Patent No.: 8022416 B2

CofC mailroom date: 12-27-11

Please respond to this request for a certificate of correction within 7 days.

FOR IFW FILES:

Please review the requested changes/corrections as shown in the **COCIN** document(s) in the IFW application image. No new matter should be introduced, nor should the scope or meaning of the claims be changed.

Please complete the response (see below) and forward the completed response to scanning using document code **COCX**.

FOR PAPER FILES:

Please review the requested changes/corrections as shown in the attached certificate of correction. Please complete this form (see below) and forward it with the file to:

Certificates of Correction Branch (CofC)
Randolph Square – 9D10-A
Palm Location 7580

Note: _____

_____

Magdalene Talley
Certificates of Correction Branch

571-272-0423 _____

Thank You For Your Assistance

The request for issuing the above-identified correction(s) is hereby:
Note your decision on the appropriate box.

- ☒ **Approved** — All changes apply.
- ☐ **Approved in Part** — Specify below which changes **do not** apply.
- ☐ **Denied** — State the reasons for denial below.

Comments: _____

_____

_____

_____

_____

[signature] 2813

SPE **Art Unit**

UNITED STATES PATENT AND TRADEMARK OFFICE

Commissioner for Patents
United States Patent and Trademark Office
P.O. Box 1450
Alexandria, VA 22313-1450
www.uspto.gov

EMCH, SCHAFFER, SCHAUB & PORCELLO CO
P O BOX 916
ONE SEAGATE SUITE 1980
TOLEDO, OH 43697

MAILED

FEB 25 2011

OFFICE OF PETITIONS

In re Application of
Jame E. Rapp
Application No. 11/254,103
Filed: October 19, 2005
Attorney Docket No. 05108

DECISION ON PETITION
TO WITHDRAW
FROM RECORD

This is a decision on the Request to Withdraw as attorney or agent of record under 37 C.F.R. § 1.36(b), filed January 20, 2011.

The request is **APPROVED**.

A grantable request to withdraw as attorney/agent of record must be signed by every attorney/agent seeking to withdraw or contain a clear indication that one attorney is signing on behalf of another/others.

The request was signed by Patrick P. Pacella on behalf of all attorneys of record who are associated with customer No. 20879. All attorneys/agents associated with the Customer Number 20879 have been withdrawn. Applicant is reminded that there is no attorney of record at this time.

The correspondence address of record has been changed and the new correspondence address is the address indicated below.

There are no pending Office actions at the present time.

Telephone inquiries concerning this decision should be directed to undersigned at 571-272-1642. All other inquiries concerning the examination or status of this application should be directed to the Technology Center.

/AMW/
April M. Wise
Petitions Examiner
Office of Petitions

cc: JAMES E. RAPP
4253 PICLKLE ROAD
OREGON, OH 43618

UNITED STATES PATENT AND TRADEMARK OFFICE

UNITED STATES DEPARTMENT OF COMMERCE
United States Patent and Trademark Office
Address: COMMISSIONER FOR PATENTS
P.O. Box 1450
Alexandria, Virginia 22313-1450
www.uspto.gov

APPLICATION NUMBER	FILING OR 371(C) DATE	FIRST NAMED APPLICANT	ATTY. DOCKET NO./TITLE
11/254,103	10/19/2005	Jame E. Rapp	05108

CONFIRMATION NO. 3057

POWER OF ATTORNEY NOTICE

20879
EMCH, SCHAFFER, SCHAUB & PORCELLO CO
P O BOX 916
ONE SEAGATE SUITE 1980
TOLEDO, OH 43697

OC000000046123171

Date Mailed: 02/22/2011

NOTICE REGARDING CHANGE OF POWER OF ATTORNEY

This is in response to the Power of Attorney filed 01/20/2011.

- The withdrawal as attorney in this application has been accepted. Future correspondence will be mailed to the new address of record. 37 CFR 1.33.

/amwise/

Office of Data Management, Application Assistance Unit (571) 272-4000, or (571) 272-4200, or 1-888-786-0101

UNITED STATES PATENT AND TRADEMARK OFFICE

Commissioner for Patents
United States Patent and Trademark Office
P.O. Box 1450
Alexandria, VA 22313-1450
www.uspto.gov

PEREGRINE PHARMACEUTICALS, INC.
5353 WEST ALABAMA
SUITE 306
HOUSTON TX 77056

MAILED
APR 18 2011
OFFICE OF PETITIONS

In re Application of	:	
Philip E. Thorpe, et al.	:	
Application No. 11/254,137	:	DECISION ON PETITION
Filed: October 19, 2005	:	
Attorney Docket No. **3999.002397**	:	

This is a decision on the petition, filed February 2, 2011, which is being treated as a petition under 37 CFR 1.8(a), requesting withdrawal of the holding of abandonment in the above-identified application.

The petition is **GRANTED**.

This application was held abandoned for failure to timely file an appeal brief (and fee required by 37 CFR 41.20(b)(2)) within the time period provided in 37 CFR 41.37(a)(1). A reply was due on or before April 12, 2010, or on or before September 13, 2010 with a five (5) month extension of time, as September 12, 2010, fell on a Sunday. The Office mailed a Notice of Abandonment on January 28, 2011.

Petitioner states that a timely reply was electronically submitted on September 13, 2010 which included the following papers: a five month extension of time with fee, a RCE and an Information Disclosure Statement. The papers were received at the USPTO on September 13, 2010. The reply to the Notice of Appeal was therefore timely filed.

Failure to timely receive correspondence which includes a certificate of mailing or certificate of facsimile transmission is addressed in 37 CFR 1.8(a), reproduced below:

Except in the situations enumerated in paragraph (a)(2) of this section or as otherwise expressly excluded in this chapter, correspondence required to be filed in the U.S. Patent and Trademark Office within a set period of time will be considered as being timely filed if the procedure described in this section is followed. The actual date of receipt will be used for all other purposes.

(1) Correspondence will be considered as being timely filed if:

(i) The correspondence is mailed or transmitted prior to expiration of the set

period of time by being:

(A) Addressed as set out in § 1.1(a) and deposited with the U.S. Postal Service with sufficient postage as first class mail;

(B) Transmitted by facsimile to the Patent and Trademark Office in accordance with § 1.6 (d); or

(C) Transmitted via the Office electronic filing system in accordance with § 1.6(a)(4); and

(ii) The correspondence includes a certificate for each piece of correspondence stating the date of deposit or transmission. The person signing the certificate should have reasonable basis to expect that the correspondence would be mailed or transmitted on or before the date indicated.

The petition satisfies the above requirements of 37 CFR 1.8(a). Accordingly, the holding of abandonment for failure to timely file a reply to the Notice of Appeal of February 12, 2010 is hereby withdrawn and the application restored to pending status.

Telephone inquiries regarding this decision should be directed to Terri Johnson at (571) 272-2991.

This application is being referred to Technology Center AU 1642 for appropriate action in the normal course of business on the reply received September 13, 2010.

/Ramesh Krishnamurthy/
Ramesh Krishnamurthy
Petitions Examiner
Office of Petitions

UNITED STATES PATENT AND TRADEMARK OFFICE

Commissioner for Patents
United States Patent and Trademark Office
P.O. Box 1450
Alexandria, VA 22313-1450
www.uspto.gov

TOWNSEND AND TOWNSEND AND CREW LLP
TWO EMBARCADERO CENTER, 8TH FLOOR
SAN FRANCISCO CA 94111

MAILED

SEP 09 2010

OFFICE OF PETITIONS

In re Application of	:	
ETOH et al.	:	
Application No. 11/254,138	:	DECISION ON PETITION
Filed: 10/18/2005	:	
Attorney Docket No. 16869Q-163300US	:	

This is a decision on the petition under 37 CFR 1.181 (no fee), filed April 2, 2010, requesting withdrawal of the holding of abandonment in the above-identified application.

The petition is **GRANTED**.

This application was held abandoned for failure to reply to the non-final Office action mailed January 2, 2009, which set a three (3) month shortened statutory period for reply. In the absence of a timely filed reply, the application became abandoned on April 3, 2009. On January 21, 2010, the Office mailed a Notice of Abandonment.

Petitioner asserts that the non-final Office action dated mailed January 2, 2009, was not received at the correspondence address of record.

A review of the written record indicates no irregularity in the mailing of the nonfinal Office action and in the absence of any irregularity, there is a strong presumption that the Office action was properly mailed to the practitioner at the address of record. This presumption may be overcome by a showing that the Office action was not in fact received.

As stated in Section 711.03(c)(I)(A) of the Manual for Patent Examining Procedure:

> In Delgar v. Schulyer, 172 USPQ 513 (D.D.C. 1971), the court decided that the Office should mail a new Notice of Allowance in view of the evidence presented in support of the contention that the applicant's representative did not receive the original Notice of Allowance. Under the reasoning of Delgar, an allegation that an Office action was never received may be considered in a petition to withdraw the

holding of abandonment. If adequately supported, the Office may grant the petition to withdraw the holding of abandonment and remail the Office action. That is, the reasoning of Delgar is applicable regardless of whether an application is held abandoned for failure to timely pay the issue fee (35 U.S.C. 151) or for failure to prosecute (35 U.S.C. 133).

To minimize costs and burdens to practitioners and the Office, the Office has modified the showing required to establish nonreceipt of an Office action. The showing required to establish nonreceipt of an Office communication must include a statement from the practitioner describing the system used for recording an Office action received at the correspondence address of record with the USPTO. The statement should establish that the docketing system is sufficiently reliable. It is expected that the record would include, but not be limited to, the application number, attorney docket number, the mail date of the Office action and the due date for the response.

Practitioner must state that the Office action was not received at the correspondence address of record, and that a search of the practitioner's record(s), including any file jacket or the equivalent, and the application contents, indicates that the Office action was not received. A copy of the record(s) used by the practitioner where the non-received Office action would have been entered had it been received is required.

A copy of the practitioner's record(s) required to show non-receipt of the Office action should include the master docket for the firm. That is, if a three month period for reply was set in the nonreceived Office action, a copy of the master docket report showing all replies docketed for a date three months from the mail date of the nonreceived Office action must be submitted as documentary proof of nonreceipt of the Office action. If no such master docket exists, the practitioner should so state and provide other evidence such as, but not limited to, the following: the application file jacket; incoming mail log; calendar; reminder system; or the individual docket record for the application in question.

The showing outlined above may not be sufficient if there are circumstances that point to a conclusion that the Office action may have been lost after receipt rather than a conclusion that the Office action was lost in the mail (e.g., if the practitioner has a history of not receiving Office actions).

After reviewing the documents submitted on petition, the Office concludes that the showing of record is sufficient to warrant withdrawal of the holding of abandonment. The practitioner submitted a copy of the master docket for the firm where the nonfinal Office action would have been entered had it been received and docketed. The practitioner stated the non-final Office action would have been entered in this docketing system had it been received and docketed. The practitioner attested to the fact that a search of the records indicated that the non-final Office

action was not received at the correspondence address of record. Accordingly, petitioner presented the required showing under 37 CFR 1.181.

The petition under 37 CFR 1.181 is **GRANTED**. The holding of abandonment is hereby withdrawn.

The Office notes that the request for Power of Attorney filed July 6, 2010, to appoint Daphne L. Burton and the registered practitioners of the Burton IP Law Group was denied by the USPTO on August 2, 2010, because the appropriate Certificate under 37 CFR 3.73(b) was not received. As a ONE TIME courtesy, a copy of this decision is being mailed to the Burton IP Law Group. However, all future communications will be mailed solely to the correspondence address of record (Customer No. 49528) until petitioner submits an appropriate revocation and appointment of power of attorney, a Certificate under 37 CFR 3.73(b), and a change of correspondence.

The matter is being referred to the technical support staff of Technology Center Art Unit 2627 for re-mailing of the non-final Office action. The three (3) month shortened statutory period for responding to the non-final Office action will be set to run from the date of the re-mailing of the Office action.

Telephone inquiries regarding this decision may be directed to the undersigned at (571) 272-3211.

C. T. Donnell

Christina Tartera Donnell
Senior Petitions Attorney
Office of Petitions

Cc: Daphne L. Burton
BURTON IP LAW GROUP
2029 Century Park East
Suite 1400
Los Angeles, CA 90067

UNITED STATES PATENT AND TRADEMARK OFFICE

Commissioner for Patents
United States Patent and Trademark Office
P.O. Box 1450
Alexandria, VA 22313-1450
www.uspto.gov

Wooten & Shaddock, PLC / Alliant Techsystems Inc.
1435 Crossways Boulevard
Suite 303
Chesapeake, VA 23320

MAILED
JUN 09 2011
OFFICE OF PETITIONS

In re Patent of Gustafson et al.	:	
Patent No. 7,281,815	:	
Issue Date: October 16, 2007	:	Letter
Application No. 11/254,159	:	
Filing Date: October 19, 2005	:	
Attorney Docket No. 22394-US-01	:	

This is a notice regarding the request for acceptance of a fee deficiency submission under 37 CFR 1.28(c) filed May 6, 2011.

The deficiency payment of $490 is hereby accepted.

The change of status to large entity has been entered and made of record.

Telephone inquiries regarding this communication should be directed to Petitions Attorney Steven Brantley at (571) 272-3203.

Charles Steven Brantley
Senior Petitions Attorney
Office of Petitions

UNITED STATES PATENT AND TRADEMARK OFFICE

Commissioner for Patents
United States Patent and Trademark Office
P.O. Box 1450
Alexandria, VA 22313-1450
www.uspto.gov

MAILED

SEP 13 2010

OFFICE OF PETITIONS

RICHARD L. MILLER
12 PARKSIDE DRIVE
DIX HILLS NY 11746

In re Application of	:	
Christopher Iannace	:	
Application No. 11/254,194	:	DECISION ON PETITION
Filed: October 19, 2005	:	
Attorney Docket No. IANC29C	:	

This is a decision on the petition under the unintentional provisions of 37 CFR 1.137(b), filed June 29, 2010, to revive the above-identified application.

The petition is **GRANTED**.

The petition satisfies the conditions for revival pursuant to the provisions of 37 CFR 1.137(b) in that (1) the reply in the form of an amendment; (2) the petition fee; and (3) the required statement of unintentional delay have been received. Accordingly, the reply to the nonfinal Office action mailed June 18, 2007, is accepted as having been unintentionally delayed.

Telephone inquiries concerning this decision should be directed to the undersigned at (571) 272-3208.

This application is being referred to Technology Center AU 3765 for appropriate action by the Examiner in the normal course of business on the reply received June 29, 2010.

/KOC/
Karen Creasy
Petitions Examiner
Office of Petitions

UNITED STATES PATENT AND TRADEMARK OFFICE

Commissioner for Patents
United States Patent and Trademark Office
P.O. Box 1450
Alexandria, VA 22313-1450
www.uspto.gov

MCANDREWS HELD & MALLOY LTD
500 WEST MADISON ST
SUITE 3400
CHICAGO IL 60661

MAILED
MAR 07 2011
OFFICE OF PETITIONS

In re Application of	:	
MacInnis, et al.	:	
Application No. 11/254,262	:	ON REQUEST FOR
Filed: October 20, 2005	:	RECONSIDERATION OF
Attorney Docket Number: 16561US01	:	PATENT TERM ADJUSTMENT

This is a decision on the petition under 37 CFR 1.705(b), filed January 3, 2011. Applicants believe that they should be accorded an additional PTA of 634 days. Applicants request this correction on the basis that the Office will take in excess of three years to issue this patent.

As the instant application for patent term adjustment requests reconsideration of the patent term adjustment solely as it relates to the Office's failure to issue the patent within 3 years of the filing date, the application for patent term adjustment under 37 CFR 1.705(b) is **DISMISSED as PREMATURE**.

Knowledge of the actual date the patent issues is required to calculate the amount, if any, of additional patent term patentee is entitled to for Office failure to issue the patent within 3 years. See § 1.702(b). (This is true even where a request for continued examination (RCE) was filed). The computer will not undertake the § 1.702(b) calculation until the actual date of issuance of the patent has been determined. Likewise, the computer will not calculate any further Office delay under § 1.702(a)(4) or applicant delay under § 1.704(c)(10) until the actual date of issuance of the patent has been determined. As such, the Office can not make a determination on the correctness of the patent term adjustment until the patent has issued.

Requesting reconsideration of the patent term adjustment to be indicated on the patent under 37 CFR 1.705(b) based on the initial determination of patent term adjustment and a projected issuance date of the patent (or even the filing date of the request for continued examination) is premature. Accordingly, it is appropriate to dismiss as premature such a request.

Rather than file a request for reconsideration of patent term adjustment under 37 CFR 1.705(b) contesting the 37 CFR 1.702(b) calculation at the time of the mailing of the notice of allowance, applicants are advised that they may wait until the time of the issuance of the patent and file a request for reconsideration of the patent term adjustment pursuant to 37 CFR 1.705(d). As the USPTO does not calculate the amount of time earned pursuant to 37 CFR 1.702(b) until the time of the issuance of the patent, the Office will consider any request for reconsideration of the patent term adjustment due to an error in the calculation of 37 CFR 1.702(b) to be timely if the request for reconsideration is filed within two months of the issuance of the patent. However, as to all other bases for contesting the initial determination of patent term adjustment received with the notice of allowance, applicant must timely file an application for patent term adjustment prior to the payment of the issue fee[1].

In view thereof, the correct determination of PTA prior to issuance is **six hundred thirteen (613) days**.

The application is being forwarded to the Office of Data Management for issuance of the patent.

Telephone inquiries specific to this decision should be directed to Petitions Attorney Cliff Congo at (571) 272-3207.

Anthony Knight
Director
Office of Petitions

[1] For example, if applicant disputes both the calculation of patent term adjustment under 37 CFR 1.702(a)(1) for Office failure to mail a first Office action or notice of allowance not later than fourteen months after the date on which the application was filed and under 37 CFR 1.702(b) for Office failure to issue a patent within three years of the actual filing date of the application, then applicant must still timely file an application for patent term adjustment prior to the payment of the issue fee to contest the calculation of Office delay in issuing a first Office action or notice of allowance. See 37 CFR 1.705(b) and 35 U.S.C. 154(b)(3)(B). A dispute as to the calculation of the §1.702(a)(1) period raised on request for reconsideration of patent term adjustment under 37 CFR 1.705(d) will be dismissed as untimely filed.

UNITED STATES PATENT AND TRADEMARK OFFICE

UNITED STATES DEPARTMENT OF COMMERCE
United States Patent and Trademark Office
Address: COMMISSIONER FOR PATENTS
P.O. Box 1450
Alexandria, Virginia 22313-1450
www.uspto.gov

APPLICATION NO.	FILING DATE	FIRST NAMED INVENTOR	ATTORNEY DOCKET NO.	CONFIRMATION NO.
11/254,273	10/20/2005	Makarand P. Gore	200503003-1	4091

22879 7590 03/03/2011
HEWLETT-PACKARD COMPANY
Intellectual Property Administration
3404 E. Harmony Road
Mail Stop 35
FORT COLLINS, CO 80528

EXAMINER
WALKE, AMANDA C

ART UNIT	PAPER NUMBER
1722	

NOTIFICATION DATE	DELIVERY MODE
03/03/2011	ELECTRONIC

Please find below and/or attached an Office communication concerning this application or proceeding.

The time period for reply, if any, is set in the attached communication.

Notice of the Office communication was sent electronically on above-indicated "Notification Date" to the following e-mail address(es):

JERRY.SHORMA@HP.COM
ipa.mail@hp.com
laura.m.clark@hp.com

UNITED STATES PATENT and TRADEMARK OFFICE
UNDER SECRETARY OF COMMERCE FOR INTELLECTUAL PROPERTY AND
DIRECTOR OF THE UNITED STATES PATENT AND TRADEMARK OFFICE
WASHINGTON, D.C. 20231
WWW.USPTO.GOV

Mailed: 3/3/2011

CHK
Paper No.

In re Application of GORE et al.
Serial No.: 11/254,273
Filed: October 20, 2005
For: NIR/IR Curable Coatings For Light Directed Imaging

DECISION ON PETITION
UNDER *37 CFR 1.48(a)*

This is a decision on the PETITION TO CORRECT INVENTORSHIP IN A NON-PROVISIONAL PATENT APPLICATION filed October 10, 2006 to correct inventorship under 37 CFR 1.48(a) by adding the names of Vladek Kasperchik.

It is noted that the applicant has met the requirements of 37 C.F.R. § 1.48(a) by (1) submitting a request to correct the inventorship that sets forth the desired inventorship change; (2) providing a statement from each person being added as an inventor that the error in inventorship occurred without deceptive intention on his or her part; (3) providing a declaration of the actual inventors as required by 37 C.F.R. § 1.63; (4) providing the processing fee set forth in 1.17(i); and, (5) providing the written consent of the assignee.

The request is **GRANTED**.

The application file is being forwarded to the appropriate section of the Patent and Trademark Office for correction of the record.

/Cynthia H. Kelly/

Cynthia H. Kelly
Supervisory Patent Examiner
Technology Center 1700

W. Bradley Haymond
HEWLETT-PACKARD COMPANY
1000 NE Circle Blvd., m/s 422B
Corvallis, OR 97330

UNITED STATES PATENT AND TRADEMARK OFFICE

Commissioner for Patents
United States Patent and Trademark Office
P.O. Box 1450
Alexandria, VA 22313-1450
www.uspto.gov

MAILED
JUL 13 2011
OFFICE OF PETITIONS

JONES DAY
222 EAST 41ST ST
NEW YORK NY 10017

In re Patent No. 7753825	:	
Issue Date: 07/13/2010	:	
Application No. 11/254289	:	DECISION ON PETITION
Filed: 10/19/2005	:	
Attorney Docket No. 11669-001-999	:	

This is a decision on the petition under 37 CFR 1.182, filed May 6, 2011, requesting issuance of a duplicate Letters Patent for the above-identified patent.

The petition is **GRANTED**.

The Office of Data Management is directed to issue a duplicate Letters Patent.

The $400.00 petition fee will be charged to the Deposit Account as authorized.

Telephone inquiries concerning this decision may be directed to the undersigned at (571) 272-3211. Inquiries regarding the issuance of a duplicate Letters Patent may be directed to Ollie Person or Kimberly Terrell, Office of Data Management at (571) 272-4200.

A copy of this decision is being faxed to the Office of Data Management for issuance of a duplicate Letters Patent.

Christina Tartera Donnell

Christina Tartera Donnell
Senior Petitions Attorney
Office of Petitions

cc: Ollie Person, 2800 S. Randolph Street, Room D-30-A (FAX 571-270-9764)
Kimberly Terrell, 2800 S. Randolph Street, Room D-33 (FAX 571-270-9958)

UNITED STATES PATENT AND TRADEMARK OFFICE

Commissioner for Patents
United States Patent and Trademark Office
P.O. Box 1450
Alexandria, VA 22313-1450
www.uspto.gov

MCANDREWS HELD & MALLOY, LTD
500 WEST MADISON STREET
SUITE 3400
CHICAGO IL 60661

MAILED

JAN 11 2011

OFFICE OF PETITIONS

In re Patent of MacInnis et al. :
Patent No. 7,791,673 :
Issued: September 7, 2010 :
Application No. 11/254,450 : ON APPLICATION FOR
Filed: October 20, 2005 : PATENT TERM ADJUSTMENT
Atty Docket No. 16427US01 :

This is in response to the APPLICATION FOR RECONSIDERATION OF THE DETERMINATION OF PATENT TERM ADJUSTMENT UNDER 35 U.S.C. § 154(b) INDICATED IN THE PATENT (37 CFR § 1.705(d)," filed October 27, 2010. Patentees request that the patent term adjustment indicated on the above-identified patent be corrected to indicate that the term of the above-identified patent is extended or adjusted by one thousand one hundred fifty (1150) days.

The petition is **DISMISSED**.

In calculating the period of delay under 35 U.S.C. § 154(b)(1)(B) ("B Delay"), patentees indicate the period of delay ended on March 18, 2010, the date the first Request for Continued Examination ("RCE") was filed.

However, per 35 U.S.C. § 154(b)(1)(B)(i), B Delay does not include "any time consumed by continued examination of the application requested by the applicant under section 132(b)." Per the language of 37 CFR 1.703(b)(1):

> (b) The period of adjustment under § 1.702(b) is the number of days, if any, in the period beginning on the day after the date that is three years after the date on which the application was filed under 35 U.S.C. 111(a) or the national stage commenced under 35 U.S.C. 371(b) or (f) in an international application and

ending on the date a patent was issued, but not including the sum of the following periods:

(1) The number of days, if any, in the period beginning on the date on which a request for continued examination of the application under 35 U.S.C. 132(b) was filed and ending on the date the patent was issued;

As stated above, the date on which a RCE was filed is not included in the B Delay period. The maximum B Delay in this case is 513 days, which is the number of days beginning on October 21, 2008, the day after the date three years after application's the filing date, and ending on March 17, 2010, the day *before* the date the RCE was filed.

The patent term adjustment remains 1149 days, which is the sum of 831 days of delay under 35 U.S.C. § 154(b)(1)(A) ("A Delay") and 513 days of maximum B Delay, reduced by 161 days of overlapping A Delay and B Delay, and reduced by 34 days for Applicant delay.

Telephone inquiries specific to this matter should be directed to the undersigned at (571) 272-3230.

Shirene Willis Brantley

Shirene Willis Brantley
Senior Petitions Attorney
Office of Petitions

UNITED STATES PATENT AND TRADEMARK OFFICE

COMMISSIONER FOR PATENTS
UNITED STATES PATENT AND TRADEMARK OFFICE
P.O. BOX 1450
ALEXANDRIA, VA 22313-1450
WWW.USPTO.GOV

Paper No.

GREENSFELDER HEMKER & GALE PC
SUITE 2000
10 SOUTH BROADWAY
ST LOUIS MO 63102

MAILED
NOV 04 2010
OFFICE OF PETITIONS

In re Application of	:	
Hiroki Sakurai	:	
Application No. 11/254,471	:	DECISION ON PETITION
Filed: October 20, 2005	:	PURSUANT TO
Attorney Docket No. 37026-88083	:	37 C.F.R. § 1.181(A)
Title: BALL SCREW LUBRICATIVE	:	
SEALING DEVICE	:	

This is a decision on the petition pursuant to 37 C.F.R. § 1.137(a), filed on September 16, 2010. This submission is being treated as a petition pursuant to 37 C.F.R. § 1.181(a).[1]

BACKGROUND

The above-identified application became abandoned for failure to submit the issue and publication fees in a timely manner in reply to the Notice of Allowance and Issue Fee Due, mailed April 29, 2010, which set a shortened statutory period for reply of three months. No extensions of time are permitted for transmitting issue fees[2] or publication fees.[3] Accordingly, the above-identified application became abandoned on July 30, 2010. A Notice of Abandonment was mailed on September 15, 2010.

1 The petition fee will be refunded to Deposit Account No. 07-1985 in due course.
2 See MPEP § 710.02(e)(III).
3 See 37 C.F.R. § 1.211(e).

RELEVANT PORTION OF THE C.F.R.

37 C.F.R. § 1.8(b) sets forth, *in toto*:

> (b) In the event that correspondence is considered timely filed by being mailed or transmitted in accordance with paragraph (a) of this section, but not received in the U.S. Patent and Trademark Office after a reasonable amount of time has elapsed from the time of mailing or transmitting of the correspondence, or after the application is held to be abandoned, or after the proceeding is dismissed, terminated, or decided with prejudice, the correspondence will be considered timely if the party who forwarded such correspondence:
>
> (1) Informs the Office of the previous mailing or transmission of the correspondence promptly after becoming aware that the Office has no evidence of receipt of the correspondence;
>
> (2) Supplies an additional copy of the previously mailed or transmitted correspondence and certificate; and
>
> (3) Includes a statement which attests on a personal knowledge basis or to the satisfaction of the Director to the previous timely mailing or transmission. If the correspondence was sent by facsimile transmission, a copy of the sending unit's report confirming transmission may be used to support this statement.

ANALYSIS

With this petition, Petitioner has alleged that a response was timely filed on July 29, 2010. Petitioner has further included a copy of this response (form PTOL-85b, which contains an authorization to charge the required fees to Deposit Account number 07-1985), and it is noted that it contains a certificate of mailing, executed by Petitioner and dated July 29, 2010. Moreover, the undersigned has confirmed that Deposit Account number 07-1985 contained sufficient funds on this date.

Considering the facts and circumstances of the delay at issue, as set forth on petition, it is concluded that Petitioner has met his burden of establishing that a response was timely submitted, pursuant to 37 C.F.R. § 1.8.

Accordingly, the petition pursuant to 37 C.F.R. § 1.181(a) is **GRANTED**. The holding of abandonment is **WITHDRAWN**.

The Office of Patent Publication will be notified of this decision, and jurisdiction over this application is transferred to the Office of Patent Publication, so that this application can be processed into a patent.

Petitioner may find it beneficial to view Private PAIR within a fortnight of the present decision to ensure that the withdrawal of the holding of abandonment has been acknowledged by the Office of Patent Publication in response to this decision. It is

noted that all inquiries with regard to any failure of that change in status should be directed to the Office of Patent Publication where that change of status must be effected - **the Office of Petitions cannot effectuate a change of status**.

Telephone inquiries regarding *this decision* should be directed to the undersigned at (571) 272-3225.[4] All other inquiries concerning the status of the application should be directed to the Office of Patent Publication at 571-272-4200.

/Paul Shanoski/
Paul Shanoski
Senior Attorney
Office of Petitions

---

4 Petitioner will note that all practice before the Office should be in writing, and the action of the Office will be based exclusively on the written record in the Office. See 37 C.F.R. § 1.2. As such, Petitioner is reminded that no telephone discussion may be controlling or considered authority for any further action(s) of Petitioner.

UNITED STATES PATENT AND TRADEMARK OFFICE

Commissioner for Patents
United States Patent and Trademark Office
P.O. Box 1450
Alexandria, VA 22313-1450
www.uspto.gov

Fish & Richardson PC
P.O.Box 1022
Minneapolis MN 55440

MAILED
SEP 06 2011
OFFICE OF PETITIONS

In re Patent No. 7,971,256
Bhikkaji et al.
Issue Date: June 28, 2011
Application No. 11/254,592
Filed: October 20, 2005
Attorney Docket No. 100101-012100US
Title: MECHANISM TO CORRELATE THE PRESENCE OF WORMS IN A NETWORK

DECISION ON REQUEST FOR RECONSIDERATION OF PATENT TERM ADJUSTMENT

This is a decision on the petition filed on August 29, 2011, which is being treated as a petition under 37 CFR 1.705(d) requesting that the patent term adjustment indicated on the above-identified patent be corrected to indicate that the term of the above-identified patent is extended or adjusted by one thousand one hundred sixty-five (1,165) days.

The request for reconsideration of the patent term adjustment (PTA) pursuant to 37 CFR 1.705(d) is **DISMISSED**.

The above-identified application matured into U.S. Pat. No. 7,971,256 on June 28, 2011. The patent issued with a patent term adjustment of 1027 days. The instant application for patent term adjustment was timely filed in accordance with 37 CFR 1.705(d). Patentees contest the period of adjustment of 398 days accorded pursuant to 37 CFR 1.702(b) and assert that the correct period of adjustment under 37 CFR 1.702(b) is 536 days.

Petitioner's arguments have been carefully considered, but are not persuasive. The period of adjustment pursuant to 37 CFR 1.702(b) was properly calculated at 398 days.

35 USC 154(b)(1)(B) states in relevant part:

Subject to the limitations under paragraph (2), if the issue of an original patent is delayed due to the failure of the United

States Patent and Trademark Office to issue a patent within 3 years after the actual filing date of the application in the United States, not including – (i) any time consumed by continued examination of the application requested by the applicant under section 132(b).

37 CFR 1.702(b) states in relevant part:

Subject to the provisions of 35 U.S.C. 154(b) and this subpart, the term of an original patent shall be adjusted if the issuance of the patent was delayed due to the failure of the Office to issue a patent within three years after the date on which the application was filed under 35 U.S.C. 111(a) or the national stage commenced under 35 U.S.C. 371(b) or (f) in an international application, but not including: (1) Any time consumed by continued examination of the application under 35 U.S.C. 132(b).

37 CFR 1.703(b) states in relevant part:

The period of adjustment under § 1.702(b) is the number of days, if any, in the period beginning on the day after the date that is three years after the date on which the application was filed under 35 U.S.C. 111(a) or the national stage commenced under 35 U.S.C. 371(b) or (f) in an international application and ending on the date a patent was issued, but not including the sum of the following periods: (1) The number of days, if any, in the period beginning on the date on which a request for continued examination of the application under 35 U.S.C. 132(b) was filed and ending on the date the patent was issued.

Counting the period of time excluded from the "B delay" for the filing of a request for continued examination under 35 U.S.C. 132(b), from the date on which the request for continued examination is filed to the date the patent is issued is proper. Patentee does not dispute that time consumed by continued examination of an application under 35 U.S.C. 132(b) is properly excluded and that the calculation of the excluded period begins on the date of filing of the request for continued examination. At issue is what further processing or examination beyond the date of filing of the request for continued examination is time consumed by continued examination of the application under 35 U.S.C. 132(b). The USPTO indicated in September of 2000 in the

final rule to implement the patent term adjustment provisions of the AIPA that once a request for continued examination under 35 U.S.C. 132(b) and 37 CFR 1.114 is filed in an application, any further processing or examination of the application, including granting of a patent, is by virtue of the continued examination given to the application under 35 U.S.C. 132(b) and CFR 1.114. See Changes to Implement Patent Term Adjustment under Twenty-Year Patent Term, 65 Fed. Reg. 56365, 56376 (Sept. 18, 2000) (response to comment 8). Thus, the excluded period begins with the filing of the request for continued examination and ends with the issuance of the patent.

Patentee's argument that the period of time after the issuance of a notice of allowance on a request for continued examination is not "any time consumed by continued examination requested by the applicant under section 132(b)" within the meaning of 35 U.S.C. 154(b)(1)(B)(i) is not availing. This limitation is not supported by the statutory language. Garcia v. United States, 469 U.S. 70, 75 (1984) ("only the most extraordinary showing of contrary intentions from [legislative history] would justify a limitation on the 'plain meaning' of the statutory language"). BP Am. Prod. Co. v. Burton, 549 U.S. 84, 91 (2006) ("Unless otherwise defined, statutory terms are generally interpreted in accordance with their ordinary meaning"). The statute provides for a guarantee of no more than 3-year application pendency, by providing for an adjustment in the patent term:

First, "Subject to the limitations of paragraph (2)," means that the limitations of paragraph 2 apply to this paragraph's adjustment of patent term. That is, the day-to-day extension of patent term for pendency beyond the 3 year period is restricted as follows: 1) "B delay" cannot accrue for days of "A delay" that overlap, 2) the patent term cannot be extended beyond disclaimed term, and 3) the period of adjustment, including accrued "B delay," will be reduced for applicant delay.

Second, "if the issue of an original patent is delayed due to the failure of the United States Patent and Trademark Office to issue a patent within 3 years after the actual filing date of the application in the United States," meaning that the condition must first occur that the issuance of an original patent (35 U.S.C. 153), not merely the issuance of a notice of allowance, is delayed due to the Office's failure to issue a patent (sign and record a patent grant in the name of the United States), not merely mail a notice of allowance, within 3 years

after the actual filing date of the application in the United States. This provision gives the Office a three-year period to issue a patent (sign and record a patent grant in the name of the United States) after the application filing date before an adjustment will accrue for "B delay."

Third, "not including- (i) any time consumed by continued examination of the application requested by the applicant under section 132(b); (ii) any time consumed by a proceeding under section 135(a), any time consumed by the imposition of an order under section 181, or any time consumed by appellate review by the Board of Patent Appeals and Interferences or by a Federal court; or (iii) any delay in the processing of the application by the United States Patent and Trademark Office requested by the applicant except as permitted by paragraph (3)(C), meaning that the three-year period does not include "any time consumed by" or "any delay in processing," as specified in clauses (i)-(iii). This language correlates to 35 U.S.C. 154(b)(1)(A) which likewise provides the basis for determining the period given the Office to take the specified actions before an adjustment will accrue for "A delay" (e.g., extended for 1 day after the day after the period specified in clauses (i)-(iv)).

Furthermore, these clauses are interpreted using their ordinary meanings. Nonetheless, the context of the legislation should be considered. As stated in Wyeth v. Dudas, No. 07-1492, 2008 U.S. Dist. LEXIS 76063 (D.D.C., September 30, 2008), because the clock for calculating the 20-year patent term begins to run on the filing date, and not on the day the patent is actually granted, some of the effective term of a patent is consumed by the time it takes to prosecute the application. To mitigate this First, "Subject to the limitations of paragraph (2)," means that the limitations of paragraph 2 apply to this paragraph's adjustment of patent term. That is, the day-to-day extension of patent term for pendency beyond the 3 year period is restricted as follows: 1) "B delay" cannot accrue for days of "A delay" that overlap, 2) the patent term cannot be extended beyond disclaimed term, and 3) the period of adjustment, including accrued "B delay," will be reduced for applicant delay.

Thus, not including "any time consumed by" means not including any days used to prosecute the application as specified in

clauses (i)-(ii)[1]. Clause (i) specifies "any time consumed by continued examination of the application requested by the applicant under section 132(b)." Clause (ii) specifies "any time consumed by a proceeding under section 135(a), any time consumed by the imposition of an order under section 181, or any time consumed by appellate review by the Board of Patent Appeals and Interferences or by a Federal court." "Time" in the context of this legislation throughout refers to days. "Consumed by" means used by or used in the course of. *Websters Collegiate Dictionary*, (11th ed.). The "any" signifies that the days consumed by are "any" of the days in the pendency of the application, and not just days that occur after the application has been pending for 3 years. As such, "any time consumed by" refers to any days used in the course of 1) continued examination of the application under section 132(b)(the filing of a request for continued examination), 2) interference proceedings, 3) secrecy orders, and 4) appellate review. Thus, that 3-year period given to the Office to issue a patent before an adjustment will accrue for "B delay" does not include any days used in the course of or any time consumed by clauses (i)-(ii), including any time consumed by the filing of a request for continued examination.

Fourth, "the term of the patent shall be extended 1 day for each day after the end of that 3-year period until the patent is issued" meaning that the consequence of this failure is that after "the end of that 3-year period" an additional 1 day of patent term will accrue for each day that the application is pending until the day the patent is issued.
effect, the statute, *inter alia*, grants adjustments of patent term whenever the patent prosecution takes more than three years, regardless of the reason. The time consumed by prosecution of the application includes every day the application is pending before the Office from the actual filing date of the application in the United States until the date of issuance of the patent. The time it takes to prosecute the

---

[1] Clause (iii) provides for not including (iii) any delay in the processing of the application by the United States Patent and Trademark Office requested by the applicant except as permitted by paragraph (3)(C), the term of the patent shall be extended 1 day for each day after the end of that 3-year period until the patent is issued. It is noted that paragraph (3)(C) allows with an adequate showing by applicant for reinstatement of no more than 3 months of the patent term reduced for applicant delay in taking in excess of three months to respond.

application ends not with the mailing of the notice of allowance, but with the issuance of the patent.

The "time consumed by" or used in the course of the continued examination of the application requested by the applicant under section 132(b) does not end until issuance of the patent. 35 U.S.C. 132(b) was enacted under the same title, the "American Inventors Protection Act of 1999," as 35 U.S.C. 154(b). Section 4403 of the AIPA amended 35 U.S.C. § 132 to provide, at the request of the applicant, for continued examination of an application for a fee (request for continued examination or RCE practice), without requiring the applicant to file a continuing application under 37 CFR 1.53(b) or a continued prosecution application (CPA) under 37 CFR 1.53(d). Thus, clause (i) is different from clause (ii) in that clause (i) refers to an examination process whereas clause (ii) refers to time consumed by proceedings (interferences, secrecy orders and appeals) in an application.

By nature, the time used in the course of the examination process continues to issuance of the patent. The examination process involves examining the application to ascertain whether it appears that the applicant is entitled to a patent under the law. See 35 U.S.C. 131 ("[t]he Director shall cause an examination to be made of the application and the alleged new invention; and if on such examination it appears that the applicant is entitled to a patent under the law, the Director shall issue a patent therefor"). If on examination it appears that the applicant is entitled to a patent, the USPTO issues a notice of allowance. See 35 U.S.C. 151 ("[i]f it appears that applicant is entitled to a patent under the law, a written notice of allowance of the application shall be given or mailed to the applicant"). If on examination it appears that the applicant is not entitled to a patent, the USPTO issues a notice (an Office action) stating the applicable rejection, objection, or other requirement, with the reasons therefor. See 35 U.S.C. 132 ("[w]henever, on examination, any claim for a patent is rejected, or any objection or requirement made, the Director shall notify the applicant thereof, stating the reasons for such rejection, or objection or requirement, together with such information and references as may be useful in judging of the propriety of continuing the prosecution of his application"). Neither the issuance of a notice of allowance nor the insurance of an Office action terminates the examination process. If after the issuance of an Office action under 35 U.S.C. 132 it

subsequently appears that the applicant is entitled to a patent (e.g., in response to an argument or amendment by the applicant), the USPTO will issue a notice of allowance. Conversely, if after the issuance of a notice of allowance under 35 U.S.C. 151 it subsequently appears that the applicant is not entitled to a patent (e.g., in response to information provided by the applicant or uncovered by the USPTO), the USPTO will withdraw the application from issuance and issue an Office action under 35 U.S.C. 132 stating the applicable rejection, objection, or other requirement, with the reasons therefor.

As held in Blacklight Power, the USPTO's responsibility to issue a patent containing only patentable claims does not end with the issuance of a notice of allowance under 35 U.S.C. 151. See BlackLight Power, Inc. v. Rogan, 295 F.3d 1269, 1273 (Fed. Cir. 2002). Rather, if there is any substantial, reasonable ground within the knowledge or cognizance of the Director as to why an application should not issue, it is the USPTO's duty to refuse to issue the patent even if a notice of allowance has previously been issued for the application. See In re Drawbaugh, 9 App. D.C. 219, 240 (D.C. Cir 1896).

Moreover, the applicant continues to be engaged in the examination process after the mailing of the notice of allowance. 37 CFR 1.56 makes clear that the applicant has a duty to disclose information material to patentability as long as the application is pending before the USPTO (i.e., until a patent is granted or the application is abandoned). See 37 CFR 1.56(a) ("[t]he duty to disclose information exists with respect to each pending claim until the claim is cancelled or withdrawn from consideration, or the application becomes abandoned"). 37 CFR 1.97 and 1.98 provide for the consideration of information submitted by the applicant after a notice of allowance has been mailed. See 37 CFR 1.97(d). In addition, 37 CFR 1.312 provides for the amendment of an application after a notice of allowance has been mailed. In fact, the request for examination procedures[2] permit the filing of a request for continued examination under 37 CFR 1.114 even after the issuance of a notice of allowance under 35 U.S.C. 151. See 37 CFR 1.114(a)(1).

As the examination process does not terminate with the mailing of the notice of allowance, the time consumed by continued examination requested by the applicant under section 132(b) does

[2] Thus, on occasion, even where a request for continued examination has already been filed and a notice of allowance issued pursuant to that request, applicant may file a further request for continued examination.

not terminate with the mailing of the notice of allowance. All the time the application is pending from the date of filing of the request for continued examination to the mailing of the notice of allowance through issuance of the patent is a consequence of the filing of the request for continued examination. Further action by the Office is pursuant to that request. Applicant has gotten further prosecution of the application without having to file a continuing application under 37 CFR 1.53(b).

All of the continued examination pursuant to the filing of the request by the applicant is properly excluded from the delay attributed to the Office. 35 U.S.C. 154(b)(1)(B)'s guarantee of a total application pendency of no more than three years provides for adjustment of the patent term for delay due to the Office's failure to issue the patent within three years, but does not include "any time consumed by continued examination requested by the applicant under 35 U.S.C. 132(b)." It is not necessary to mitigate the effect on the 20-year term to the extent that applicant has requested that the Office continue to examine the application via a request for continued examination, in lieu of, the filing of a continuing application under 37 CFR 1.53(b).

In view thereof, no adjustment to the patent term will be made.

Nothing in this decision shall be construed as a waiver of the requirement of 35 U.S.C. 154(b)(4) that any civil action by an applicant dissatisfied with a determination made by the Director under 35 U.S.C. 154(b)(3) be filed in the United States District Court for the District of Columbia within 180 days after the grant of the patent.

The Office acknowledges submission of the $200.00 fee set forth in 37 CFR 1.18(e). No additional fees are required.

Telephone inquiries specific to this matter should be directed to the undersigned at (571) 272-3215.

Charlema Grant
Attorney
Office of Petitions

UNITED STATES PATENT AND TRADEMARK OFFICE

Commissioner for Patents
United States Patent and Trademark Office
P.O. Box 1450
Alexandria, VA 22313-1450
www.uspto.gov

Kathy Manke
Avago Technologies Limited
4380 Ziegler Road
Fort Collins CO 80525

MAILED
MAR 15 2011
OFFICE OF PETITIONS

In re Application of	:	
Cheah et al.	:	
Application No. 11/254625	:	
Filing or 371(c) Date: 10/20/2005	:	ON PETITION
Attorney Docket Number:	:	
70051133-1	:	

This is a decision on the Petition Under 37 CFR 1.137(b), filed November 29, 2010, to revive the above-identified application.

The petition is **granted**.

The above-identified application became abandoned for failure to timely and properly reply to the non-final Office action, mailed May 21, 2010. The Office action set a three (3) month period for reply from the mail date of the Office action. Extensions of time were available under 37 CFR 1.136(a). No complete and proper reply having been received, the application became abandoned on August 22, 2010. A Notice of Abandonment was mailed December 6, 2010.

Applicant files the present petition and Amendment in response to the Office action. The petition satisfies the conditions for revival pursuant to the provisions of 37 CFR 1.137(b) in that (1) the reply in the form of an Amendment is filed with the present petition; (2) the petition fee; and (3) the required statement of unintentional delay. Accordingly, the reply is accepted as having been unintentionally delayed.

The application file does not indicate a change of address has been filed in this case, although the address given on the petition differs from the address of record. A change of address should be filed in this case in accordance with MPEP 601.03. A courtesy copy of this decision is being mailed to the address noted on the petition. However, until otherwise instructed, all future correspondence regarding this application will be mailed solely to the address of record.

This application is being referred to Technology Center Art Unit 2629 for processing of the Amendment filed with the petition in the normal course of business.

Telephone inquiries concerning this decision should be directed to the undersigned at (571) 272-3232.

/DLW/

Derek L. Woods
Attorney
Office of Petitions

CC: MARK A. WILSON
1811 SANTA RITA ROAD, SUITE 130
PLEASANTON, CA 94566

UNITED STATES PATENT AND TRADEMARK OFFICE

Commissioner for Patents
United States Patent and Trademark Office
P.O. Box 1450
Alexandria, VA 22313-1450
www.uspto.gov

MAILED

SEP 24 2010

OFFICE OF PETITIONS

VENABLE LLP
P.O. BOX 34385
WASHINGTON DC 20043-9998

In re Patent No. 7,641,932	: DECISION ON REQUEST
Issue Date: January 5, 2010	: FOR RECONSIDERATION OF
Application No. 11/254,740	: PATENT TERM ADJUSTMENT
Filed: October 21, 2005	: AND
Attorney Docket No. 31608-219865	: NOTICE OF INTENT TO ISSUE
	: CERTIFICATE OF CORRECTION

This is a decision on the "Request for Reconsideration of Patent Term Adjustment Calculation", filed May 21, 2010. Patentee requests that the determination of patent term adjustment under 35 U.S.C. 154(b) be corrected from 962 to 1071 days.

The petition is **GRANTED** to the extent indicated herein.

The patent term adjustment indicated on the patent is to be corrected by issuance of a certificate of correction showing a revised Patent Term Adjustment of one thousand seventy-one **(1071)** days.

On January 5, 2010 the application matured into U.S. Patent No. 7,641,932 with a revised PTA thereon of 585 days. On February 4, 2010, patentee filed a Request for Recalculation of Patent Term Adjustment in View of Wyeth. On April 21, 2010, the Office mailed a decision granting the petition under 37 CFR 1.705(d) to the extent that a certificate of correction would be issued indicating that the term of the patent was extended or adjusted by 962 days. Patentee disputes the reduction of one hundred eighteen (118) days attributed to patentee for the submission of a paper filed September 10, 2009 after the Notice of Allowance was mailed.

This application is not subject to a terminal disclaimer.

The reduction of one hundred eighteen (118) days pursuant to 37 C.F.R. § 1.704(c)(10) is at issue.

The reduction of 118 days has been found to be incorrect. A review of the application file, as stated by Patentee, supports a conclusion that the reduction should be from the filing of the Request for Corrected Filing Receipt on September 10, 2009 to the mailing

of the response on September 18, 2010, not the issue date of the Patent on January 5, 2010. The period of delay pursuant to 37 C.F.R. § 1.704(c)(10) is therefore 9 days.

In view thereof, the patent term adjustment indicated in the patent should have been one thousand seventy-one **(1071)** days.

The Office notes that the decision of April 21, 2010, was issued in error. Accordingly, the decision of April 21, 2010, is withdrawn. The present decision supersedes the decision mailed on April 21, 2010.

The application is being forwarded to the Certificates of Branch for issuance of a certificate of correction. The Office will issue a certificate of correction indicating that the term of the above-identified patent is extended or adjusted by **one thousand seventy-one (1071) days**.

Telephone inquiries specific to this decision should be directed to the undersigned Petitions Attorney at (571) 272-3212.

Patricia Faison-Ball

Patricia Faison-Ball
Senior Petitions Attorney
Office of Petitions

Enclosure: Copy of DRAFT Certificate of Correction

DRAFT

UNITED STATES PATENT AND TRADEMARK OFFICE

CERTIFICATE OF CORRECTION

PATENT : 7,641,932 B2

DATED : January 5, 2010

INVENTOR(S) : Richard Tanzler

It is certified that error appears in the above-identified patent and that said Letters Patent is hereby corrected as shown below:

On the cover page,

[*] Notice: Subject to any disclaimer, the term of this patent is extended or adjusted under 35 USC 154(b) by (962) days

Delete the phrase "by 962 days" and insert – by 1071 days--

UNITED STATES PATENT AND TRADEMARK OFFICE

Commissioner for Patents
United States Patent and Trademark Office
P.O. Box 1450
Alexandria, VA 22313-1450
www.uspto.gov

Date Mailed : November 8, 2011
Serial No. : 11/254893
Patent No. :7,428,709 B2
Patent Issued : November 8, 2011
Inventor(s) :Jeffrey A. Lev, et al.
Title : COMPUTER DEVICE WITH RETRACTABLE CONNECTOR

Re: Request for Certificate of Correction

Respecting the alleged error(s)noted in your request the added text in Claim 15 would create 112, second paragraph issue, as the claim now would read "a connector for connecting an external device to a computer device, the connector configured to AN EXTERNAL DEVICE TO THE COMPUTER.

In view of the foregoing, your request is hereby denied.

Magdalene Talley
For Mary Diggs, Supervisor
Decisions and Certificate
Of Correction Branch
(703)756-1540
FAX 571-270-9942

Hewlett-Packard Company
Intellectual Property Administration
P.O. Box 272400
Fort Collins, CO 80527-2400

MD/mt

UNITED STATES PATENT AND TRADEMARK OFFICE

Commissioner for Patents
United States Patent and Trademark Office
P.O. Box 1450
Alexandria, VA 22313-1450
www.uspto.gov

Llewellyn Wall
2465 J-17 Centreville Rd.
Suite 278
Herndon VA 20171

MAILED
APR 04 2011
OFFICE OF PETITIONS

In re Application of	:
Wall	: DECISION ON PETITION
Application No. 11/255,078	:
Filed: October 19, 2005	:
Atty. Dkt. No.: 86210 7080	:

This is a decision on the petition under 37 CFR 1.137(b), filed February 11, 2011, to revive the above-identified application.

This application became abandoned March 11, 2010 for failure to timely reply to the final Office action mailed December 10, 2009. The final Office action set a three month shortened statutory period of time for reply. No extensions of time in accordance with 37 CFR 1.136(a) were timely requested. Notice of Abandonment was mailed July 21, 2010.

A grantable petition under 37 CFR 1.137(b) must be accompanied by: (1) the required reply, unless previously filed; (2) the petition fee as set forth in 37 CFR 1.17(m); (3) a statement that the entire delay in filing the required reply from the due date for the reply until the filing of a grantable petition pursuant to 37 CFR 1.137(b) was unintentional; and (4) any terminal disclaimer (and fee as set forth in 37 CFR 1.20(d)) required by 37 CFR 1.137(d). Where there is a question as to whether either the abandonment or the delay in filing a pètition under 37 CFR 1.137 was unintentional, the Director may require additional information. See MPEP 711.03(c)(II)(C) and (D).

The instant petition has been carefully reviewed and found in compliance with the requirements set forth above.

In view thereof, the petition is hereby **GRANTED**.

There is no indication that the petition is signed by a registered patent attorney or patent agent of record. However, in accordance with 37 CFR 1.34, practitioner's signature appearing on the correspondence shall constitute a representation to the United States Patent and Trademark Office that he is authorized to represent the particular party in whose behalf he acts. If practitioner desires to receive correspondence regarding this file, the appropriate power of attorney documents must be submitted. A courtesy copy of this decision is being mailed to practitioner, the petitioner herein. However, until otherwise instructed, all future correspondence

regarding this application file will be directed solely to the above-noted correspondence address of record.

This application is being directed to Group Art Unit 2178 for further processing.

Telephone inquiries concerning this matter may be directed to the undersigned at (571) 571-3205.

/ALESIA M. BROWN/

Alesia M. Brown
Attorney Advisor
Office of Petitions

CC: Lawrence Harbin
500 Ninth Street, SE
Washington, DC 20003

UNITED STATES PATENT AND TRADEMARK OFFICE

Commissioner for Patents
United States Patent and Trademark Office
P.O. Box 1450
Alexandria, VA 22313-1450
www.uspto.gov

MAILED
FEB 10 2011
OFFICE OF PETITIONS

ADE & COMPANY INC.
2157 Henderson Highway
WINNIPEG MB R2G1P-9 CA CANADA

In re Application of	:	
Ronald Keith Giercke	:	
Application No. 11/255,171	:	DECISION ON PETITION
Filed: October 21, 2005	:	
Attorney Docket No. 85517-102 ADB	:	

This is a decision on the petition under the unintentional provisions of 37 CFR 1.137(b), filed July 8, 2010, to revive the above-identified application.

The petition is **GRANTED**.

This application became abandoned for failure to timely pay the issue and publication fees on or before March 8, 2010, as required by the Notice of Allowance and Fee(s) Due, mailed December 8, 2009. Accordingly, the date of abandonment of this application is March 9, 2010. A Notice of Abandonment was mailed on March 23, 2010.

The petition satisfies the requirements of 37 CFR 1.137(b) in that petitioner has supplied (1) the reply in the form of payment of the issue fee of $755 and the publication fee of $300, (2) the petition fee of $810, and (3) a proper statement of unintentional delay. Accordingly, the issue and publication fees are accepted as being unintentionally delayed.

Telephone inquiries concerning this decision should be directed to Kimberly Inabinet at (571) 272-4618.

This application is being referred to the Office of Data Management for further processing into a patent.

/Kimberly A. Inabinet/

Kimberly A. Inabinet
Petitions Examiner
Office of Petitions

UNITED STATES PATENT AND TRADEMARK OFFICE

Commissioner for Patents
United States Patent and Trademark Office
P.O. Box 1450
Alexandria, VA 22313-1450
www.uspto.gov

CANTOR COLBURN LLP
20 CHURCH STREET
22ND FLOOR
HARTFORD, CT 06103

MAILED
APR 14 2011
OFFICE OF PETITIONS

In re Application of :
Hyun-Taek O et al :
Application No. 11/255,472 :
Filed: October 21, 2005 :
Attorney Docket No. GRAFT COPOLYMER, METHOD FOR PREPARING THE SAME AND THERMOPLASTIC RESIN COMPOSITION CONTAINING THE SAME

ON PETITION

This is a decision on the petition, filed April 11, 2011 under 37 CFR 1.313(c)(2) to withdraw the above-identified application from issue after payment of the issue fee.

The petition is **GRANTED**.

The above-identified application is withdrawn from issue for consideration of a submission under 37 CFR 1.114 (request for continued examination). See 37 CFR 1.313(c)(2).

Petitioner is advised that the issue fee paid on March 23, 2011 in the above-identified application cannot be refunded. If, however, the above-identified application is again allowed, petitioner may request that it be applied towards the issue fee required by the new Notice of Allowance.[1]

Telephone inquiries should be directed to Irvin Dingle at (571) 272-3210.

This matter is being referred to Technology Center AU 1765 for processing of the request for continued examination under 37 CFR 1.114 and for consideration of the concurrently filed amendment.

/Irvin Dingle/
Irvin Dingle
Petitions Examiner
Office of Petitions

---

[1] The request to apply the issue fee to the new Notice may be satisfied by completing and returning the new Issue Fee Transmittal Form PTOL-85(b), which includes the following language thereon: Commissioner for Patents is requested to apply the Issue Fee and Publication Fee (if any) or re-apply any previously paid issue fee to the application identified above. Petitioner is advised that, whether a fee is indicated as being due or not, the Issue Fee Transmittal Form **must** be completed and timely submitted to avoid abandonment. Note the language in bold text on the first page of the Notice of Allowance and Fee(s) Due (PTOL-85).

PTO/SB/66 (03-09)
Approved for use through 03/31/2012. OMB 0651-0016
U.S. Patent and Trademark Office: U.S. DEPARTMENT OF COMMERCE
Under the Paperwork Reduction Act of 1995, no persons are required to respond to a collection of information unless it displays valid OMB control number.

PETITION TO ACCEPT UNINTENTIONALLY DELAYED PAYMENT OF MAINTENANCE FEE IN AN EXPIRED PATENT (37 CFR 1.378(c))

Patent Number	Issue Date (YYYY-MM-DD)	Application Number	Filing Date (YYYY-MM-DD)	Docket Number (if applicable)
7311567	2007-12-25	11255582	2005-10-21	BWT2 72253 (D113)

CAUTION: Maintenance fee (and surcharge, if any) payment must correctly identify: (1) the patent number and (2) the application number of the actual U.S. application leading to issuance of that patent to ensure the fee(s) is/are associated with the correct patent. 37 CFR 1.366(c) and (d).

SMALL ENTITY
☒ Patentee claims, or has previously claimed, small entity status. See 37 CFR 1.27.

LOSS OF ENTITLEMENT TO SMALL ENTITY STATUS
☐ Patentee is no longer entitled to small entity status. See 37 CFR 1.27(g)

NOT Small Entity		Small Entity	
Fee	Code	Fee	Code
○ 3 ½ year	(1551)	● 3 ½ year	(2551)
○ 7 ½ year	(1552)	○ 7 ½ year	(2552)
○ 11 ½ year	(1553)	○ 11 ½ year	(2553)

SURCHARGE
The surcharge required by 37 CFR 1.20(i)(2) (Fee Code 1558) must be paid as a condition of accepting unintentionally delayed payment of the maintenance fee.

MAINTENANCE FEE (37 CFR 1.20(e)-(g))
The appropriate maintenance fee must be submitted with this petition.

STATEMENT
THE UNDERSIGNED CERTIFIES THAT THE DELAY IN PAYMENT OF THE MAINTENANCE FEE TO THIS PATENT WAS UNINTENTIONAL

PETITIONER(S) REQUEST THAT THE DELAYED PAYMENT OF THE MAINTENANCE FEE BE ACCEPTED AND THE PATENT REINSTATED

THIS PORTION MUST BE COMPLETED BY THE SIGNATORY OR SIGNATORIES

37 CFR 1.378(d) states: "Any petition under this section must be signed by an attorney or agent registered to practice before the Patent and Trademark Office, or by the patentee, the assignee, or other party in interest."

I certify, in accordance with 37 CFR 1.4(d)(4) that I am

- ● An attorney or agent registered to practice before the Patent and Trademark Office
- ○ A sole patentee
- ○ A joint patentee; I certify that I am authorized to sign this submission on behalf of all the other patentees.
- ○ A joint patentee; all of whom are signing this e-petition
- ○ The assignee of record of the entire interest

Under the Paperwork Reduction Act of 1995, no persons are required to respond to a collection of information unless it displays valid OMB control number.

Patent Practitioner			
A signature of the applicant or representative is required in accordance with 37 CFR 1.33 and 10.18. Please see 37 CFR 1.4(d) for the form of the signature			
Signature	/Gunther O. Hanke/	Date (YYYY-MM-DD)	2012-02-02
Name	Gunther O. Hanke	Registration Number	32989

This collection of information is required by 37 CFR 1.378(c). The information is required to obtain or retain a benefit by the public which is to file (and by the USPTO to process) an application. Confidentiality is governed by 35 U.S.C. 122 and 37 CFR 1.11 and 1.14. This collection is estimated to take 1 hour to complete, including gathering, preparing, and submitting the completed application form to the USPTO. Time will vary depending upon the individual case. Any comments on the amount of time you require to complete this form and/ or suggestions for reducing this burden, should be sent to the Chief Information Officer, U.S. Patent and Trademark Office, U.S. Department of Commerce, P.O. Box 1450, Alexandria, VA 22313-1450. DO NOT SEND FEES OR COMPLETED FORMS TO THIS ADDRESS. **This form can only be used when in conjunction with EFS-Web. If this form is mailed to the USPTO, it may cause delays in reinstating the patent.**

Privacy Act Statement

The Privacy Act of 1974 (P.L. 93-579) requires that you be given certain information in connection with your submission of the attached form related to a patent application or patent. Accordingly, pursuant to the requirements of the Act, please be advised that: (1) the general authority for the collection of this information is 35 U.S.C. 2(b)(2); (2) furnishing of the information solicited is voluntary; and (3) the principal purpose for which the information is used by the U.S. Patent and Trademark Office is to process and/or examine your submission related to a patent application or patent. If you do not furnish the requested information, the U.S. Patent and Trademark Office may not be able to process and/or examine your submission, which may result in termination of proceedings or abandonment of the application or expiration of the patent.

The information provided by you in this form will be subject to the following routine uses:

1. The information on this form will be treated confidentially to the extent allowed under the Freedom of Information Act (5 U.S.C. 552) and the Privacy Act (5 U.S.C. 552a). Records from this system of records may be disclosed to the Department of Justice to determine whether the Freedom of Information Act requires disclosure of these records.

2. A record from this system of records may be disclosed, as a routine use, in the course of presenting evidence to a court, magistrate, or administrative tribunal, including disclosures to opposing counsel in the course of settlement negotiations.

3. A record in this system of records may be disclosed, as a routine use, to a Member of Congress submitting a request involving an individual, to whom the record pertains, when the individual has requested assistance from the Member with respect to the subject matter of the record.

4. A record in this system of records may be disclosed, as a routine use, to a contractor of the Agency having need for the information in order to perform a contract. Recipients of information shall be required to comply with the requirements of the Privacy Act of 1974, as amended, pursuant to 5 U.S.C. 552a(m).

5. A record related to an International Application filed under the Patent Cooperation Treaty in this system of records may be disclosed, as a routine use, to the International Bureau of the World Intellectual Property Organization, pursuant to the Patent Cooperation Treaty.

6. A record in this system of records may be disclosed, as a routine use, to another federal agency for purposes of National Security review (35 U.S.C. 181) and for review pursuant to the Atomic Energy Act (42 U.S.C. 218(c)).

7. A record from this system of records may be disclosed, as a routine use, to the Administrator, General Services, or his/her designee, during an inspection of records conducted by GSA as part of that agency's responsibility to recommend improvements in records management practices and programs, under authority of 44 U.S.C. 2904 and 2906. Such disclosure shall be made in accordance with the GSA regulations governing inspection of records for this purpose, and any other relevant (i.e., GSA or Commerce) directive. Such disclosure shall not be used to make determinations about individuals.

8. A record from this system of records may be disclosed, as a routine use, to the public after either publication of the application pursuant to 35 U.S.C. 122(b) or issuance of a patent pursuant to 35 U.S.C. 151. Further, a record may be disclosed, subject to the limitations of 37 CFR 1.14, as a routine use, to the public if the record was filed in an application which became abandoned or in which the proceedings were terminated and which application is referenced by either a published application, an application open to public inspections or an issued patent.

9. A record from this system of records may be disclosed, as a routine use, to a Federal, State, or local law enforcement agency, if the USPTO becomes aware of a violation or potential violation of law or regulation.

UNITED STATES PATENT AND TRADEMARK OFFICE

Commissioner for Patents
United States Patent and Trademark Office
P.O. Box 1450
Alexandria, VA 22313-1450
www.uspto.gov

In re Patent No. 7311567
Issue Date: December 25,2007
Application No. 11255582
Filed: October 21,2005
Attorney Docket No. BWT2-72253

:
:DECISION GRANTING PETITION
:UNDER 37 CFR 1.378(c)
:

This is a decision on the electronic petition, filed February 2,2012 ,under 37 CFR 1.378(c) to accept the unintentionally delayed payment of the 3.5 year maintenance fee for the above-identified patent.

The petition is **GRANTED**.

The maintenance fee is accepted, and the above-identified patent reinstated as of February 2,2012 . This decision also constitutes notice that the fee has been accepted. An electronic copy of the petition and this decision has been created as an entry in the Image File Wrapper. Nevertheless, petitioner should print and retain an independent copy.

Telephone inquiries related to this electronic decision should be directed to the Electronic Business Center at 1-866-217-9197.

UNITED STATES PATENT AND TRADEMARK OFFICE

Commissioner for Patents
United States Patent and Trademark Office
P.O. Box 1450
Alexandria, VA 22313-1450
www.uspto.gov

MARGARET ANDERSON
106 E. 6TH STREET, SUITE 900
AUSTIN TX 78701

MAILED

MAR 03 2011

OFFICE OF PETITIONS

In re Application of	:	
Jung et al.	:	DECISION ON PETITION
Application No. 11/255,588	:	TO WITHDRAW
Filed: October 21, 2005	:	FROM RECORD
Attorney Docket No. QQ1-0035US	:	

This is a decision on the Request to Withdraw as attorney or agent of record under 37 C.F.R. § 1.36(b), filed January 24, 2011.

The request is **NOT APPROVED**.

The Office will only accept correspondence address changes to the most current address information provided for the assignee of the entire interest *who properly became of record under 37 CFR 3.71,* or, if no assignee of the entire interest has properly been made of record, the most current address information provided for the first named inventor. 37 CFR 3.71(c) states:

An assignee becomes of record either in a national patent application or a reexamination proceeding by filing a statement in compliance with § 3.73(b) that is signed by a party who is authorized to act on behalf of the assignee.

According to a review of current USPTO records petitioner has not requested the address be changed to a properly recorded assignee or the first listed inventor. The Customer Number 55922 is neither the first named inventor nor the assignee who properly became of record under 37 CFR 3.71 As such, all future communications from the Office will continue to be directed to the above-listed address until otherwise notified by applicant.

Further, the address given on the petition differs from the address of record. A courtesy copy of this decision is being mailed to the address given on the petition; however, the Office will mail all future correspondence solely to the address of record.

Currently, there is an outstanding Office action mailed November 12, 2010 that requires a reply.

Telephone inquires concerning this decision should be directed to the undersigned at (571) 272-7751.

Joan Olszewski
Petitions Examiner
Office of Petitions

cc: LEE & HAYES, PLLC
601 W RIVERSIDE
SUITE 1400
SPOKANE, WA 99201

UNITED STATES PATENT AND TRADEMARK OFFICE

Commissioner for Patents
United States Patent and Trademark Office
P.O. Box 1450
Alexandria, VA 22313-1450
www.uspto.gov

SEAN E. WEBB
3595 HICKORY BRANCH TRAIL
SUWANEE GA 30024

MAILED

JAN 10 2011

OFFICE OF PETITIONS

In re Application of	:	
Sean R. Webb et al.	:	
Application No. 11/255,642	:	DECISION ON PETITION
Filed: October 21, 2005	:	
Attorney Docket No.	:	

This is a decision on the petition under the unintentional provisions of 37 CFR 1.137(b), filed November 19, 2010, to revive the above-identified application.

The petition is **GRANTED**.

This application became abandoned for failure to timely pay the issue and publication fees on or before October 6, 2010, as required by the Notice of Allowance and Fee(s) Due, mailed July 6, 2010. Accordingly, the date of abandonment of this application is October 7, 2010. A Notice of Abandonment was mailed on November 24, 2010.

The petition satisfies the requirements of 37 CFR 1.137(b) in that petitioner has supplied (1) the reply in the form of payment of the issue fee of $755 and the publication fee of $300, (2) the petition fee of $810, and (3) a proper statement of unintentional delay. Accordingly, the issue and publication fees are accepted as being unintentionally delayed.

The application file does not indicate a change of address has been filed in this case, although the address given on the petition differs from the address of record. A change of address should be filed in this case in accordance with MPEP 601.03. A courtesy copy of this decision is being mailed to the address noted on the petition. However, until otherwise instructed, all future correspondence regarding this application will be mailed solely to the address of record.

Telephone inquiries concerning this decision should be directed to Kimberly Inabinet at (571) 272-4618.

This application is being referred to the Office of Data Management for further processing into a patent.

/Kimberly A. Inabinet/

Kimberly A. Inabinet
Petitions Examiner
Office of Petitions

cc: Kevin W. Grierson
4610 Victoria Boulevard
Hampton, VA 23669

Best Available Copy

RECEIVED
CENTRAL FAX CENTER
AUG 10 2010

Doc Code: PET.PTA.RCAL
Document Description: Request for Recalculation in view of Wyeth

PTO/SB/131 (01-10)
Approved for use through 02/28/2011. OMB 0651-0020
U.S. Patent and Trademark Office; U. S. DEPARTMENT OF COMMERCE
Under the Paperwork Reduction Act of 1995, no persons are required to respond to a collection of information unless it displays a valid OMB control number.

REQUEST FOR RECALCULATION OF PATENT TERM ADJUSTMENT IN VIEW OF *WYETH**

Attorney Docket Number: 150113-US-NP	Patent Number: 7,668,079
Filing Date (or 371(b) or (f) Date): October 21, 2005	Issue Date: February 23, 2010
First Named Inventor: Neeraj Chandra	
Title: Multiple endpoint paths for point-to-multipoint (P2MP) SPVC	

PATENTEE HEREBY REQUESTS RECALCULATION OF THE PATENT TERM ADJUSTMENT (PTA) UNDER 35 USC 154(b) INDICATED ON THE ABOVE-IDENTIFIED PATENT. THE PATENTEE'S SOLE BASIS FOR REQUESTING THE RECALCULATION IS THE USPTO'S PRE-*WYETH* INTERPRETATION OF 35 U.S.C. 154(b)(2)(A).

Note: This form is only for requesting a recalculation of PTA for patents issued before March 2, 2010, if the sole basis for requesting the recalculation is the USPTO's pre-*Wyeth* interpretation of 35 U.S.C. 154(b)(2)(A). See Instruction Sheet on page 2 for more information.

Patentees are reminded that to preserve the right to review in the United States District Court for the District of Columbia of the USPTO's patent term adjustment determination, a patentee must ensure that he or she also takes the steps required under 35 U.S.C. 154(b)(3) and (b)(4) and 37 CFR 1.705 in a timely manner.

**Wyeth v. Kappos*, No. 2009-1120 (Fed. Cir., Jan. 7, 2010).

Signature	Date August 10, 2010
Name (Print/Typed) Greg W. Benoit	Registration Number 48,067

*Note: Signatures of all the inventors or assignees of record of the entire interest or their representative(s) are required in accordance with 37 CFR 1.33 and 11.18. Please see 37 CFR 1.4(d) for the form of the signature. If necessary, submit multiple forms for more than one signature, see below**.

☑ *Total of 1 forms are submitted.

The information is required to obtain or retain a benefit by the public which is to file (and by the USPTO to process) an application. Confidentiality is governed by 35 U.S.C. 122 and 37 CFR 1.11 and 1.14. This collection is estimated to take 12 hours to complete, including gathering, preparing, and submitting the completed application form to the USPTO. Time will vary depending upon the individual case. Any comments on the amount of time you require to complete this form and/or suggestions for reducing this burden, should be sent to the Chief Information Officer, U.S. Patent and Trademark Office, U.S. Department of Commerce, P.O. Box 1450, Alexandria, VA 22313-1450. DO NOT SEND FEES OR COMPLETED FORMS TO THIS ADDRESS. SEND TO: **Commissioner for Patents, P.O. Box 1450, Alexandria, VA 22313-1450.**

If you need assistance in completing the form, call 1-800-PTO-9199 and select option 2.

UNITED STATES PATENT AND TRADEMARK OFFICE

UNITED STATES DEPARTMENT OF COMMERCE
United States Patent and Trademark Office
Address: COMMISSIONER FOR PATENTS
P.O. Box 1450
Alexandria, Virginia 22313-1450
www.uspto.gov

ECKERT SEAMANS CHERIN & MELLOTT, LLC.
600 GRANT STREET, 44TH FLOOR
PITTSBURGH, PA 15219

Mail Date: 08/17/2010

Applicant	: Neeraj Chandra	: DECISION ON REQUEST FOR
Patent Number	: 7668079	: RECALCULATION of PATENT
Issue Date	: 02/23/2010	: TERM ADJUSTMENT IN VIEW
Application No	: 11/255,713	: OF WYETH AND NOTICE OF INTENT TO
Filed	: 10/21/2005	: ISSUE CERTIFICATE OF CORRECTION
		:

The Request for Recalculation is **GRANTED** to the extent indicated.

The patent term adjustment has been determined to be **1042** days. The USPTO will *sua sponte* issue a certificate of correction reflecting the amount of PTA days determined by the recalculation.

Prior to the issuance of the certificate of correction, the USPTO will afford patentee an opportunity to be heard and request reconsideration. Accordingly, patentee has **one month or thirty (30) days**, whichever is longer, to file a request for reconsideration of this patent term adjustment calculation. See 35 U.S.C. 154(b)(3)(B)(ii) and 37 CFR 1.322(a)(4). No extensions of time will be granted under 37 CFR 1.136.

Patentee should use document code PET.OP if electronically filing a request for reconsideration of this patent term adjustment calculation. The patentee must also include the information required by 37 CFR 1.705(b)(2) and the fee required by 37 CFR 1.18(e). If patentee does not file a timely request for reconsideration of this patent term adjustment calculation including the information required by 37 CFR 1.705(b)(2) and the fee required by 37 CFR 1.18(e), the USPTO will issue a certificate of correction reflecting the PTA determination noted above.

Patentee should be aware that in order to preserve the right to review in the United States District Court for the District of Columbia of the USPTO patent term adjustment determination, patentee must ensure that he or she also take the steps required under 35 U.S.C. 154(b)(4)(A) in a timely manner. Nothing in the request for recalculation should be construed as providing an alternative time frame for commencing a civil action under 35 U.S.C. 154(b)(4)(A).

Any questions concerning this decision should be directed to the Office of Patent Legal Administration at 571-272-7702.

UNITED STATES PATENT AND TRADEMARK OFFICE

Commissioner for Patents
United States Patent and Trademark Office
P.O. Box 1450
Alexandria, VA 22313-1450
www.uspto.gov

AMGEN INC.
Mail Stop 28-2-C
One Amgen Center Drive
Thousand Oaks, CA 91320-1799

MAILED
NOV 08 2010
OFFICE OF PETITIONS

In re Patent No. 7,579,168	:
McCarthy	: DECISION UPON REMAND AND
Issue Date: August 25, 2009	: RECONSIDERATION OF
Application No. 11/255,790	: PATENT TERM ADJUSTMENT
Filed: October 21, 2005	: AND NOTICE OF INTENT
Attorney Docket No. A-992-US-DIV6	: TO ISSUE CERTIFICATE OF CORRECTION
Title: Human Dickkopf-Related Nucleic Acid Molecules	:

This is a decision following remand from the District Court for the District of Columbia regarding the patent term adjustment indicated on the above-identified patent. The Court remanded this matter to the U.S. Patent and Trademark Office for recalculation of the patent term adjustment in accordance with the decision in Wyeth & Elan Pharma Int'l Ltd. v. Kappos, 591 F.3d 1364 (Fed. Cir. 2010).

The patent term adjustment indicated on the above-identified patent has been recalculated as directed by the Court. The term of the above-identified patent is extended or adjusted by FIVE HUNDRED AND SEVENTY (570) days.

The application is being forwarded to the Certificates Branch for issuance of a certificate of correction indicating that the term of the above-identified patent is extended or adjusted by FIVE HUNDRED AND SEVENTY (570) days.

Telephone inquiries specific to this matter should be directed to Senior Legal Advisor, Kery A. Fries at (571) 272-7757.

/Kery A. Fries/

Kery A. Fries
Senior Legal Advisor Attorney
Office of Patent Legal Administration
Office of Associate Commissioner
For Patent Examination Policy

Enclosure: Copy of DRAFT Certificate of Correction
Copy of adjusted PTA calculation

UNITED STATES PATENT AND TRADEMARK OFFICE

CERTIFICATE OF CORRECTION

PATENT : 7,579,168

DATED : **August 25, 2009** **DRAFT**

INVENTOR(S) : McCarthy

It is certified that error appears in the above-identified patent and that said Letters Patent is hereby corrected as shown below:

On the cover page,

[*] Notice: Subject to any disclaimer, the term of this patent is extended or adjusted under 35 USC 154(b) by 262 days

Delete the phrase "by 262 days" and insert – by 570 days--

Day : Wednesday

PALM INTRANET

Date: 11/3/2010
Time: 11:40:53

PTA Calculations for Application: 11/255790			
Application Filing Date:	10/21/2005	PTO Delay (PTO):	383
Issue Date of Patent:	08/25/2009	Three Years:	0
Pre-Issue Petitions:	0	Applicant Delay (APPL):	121
Post-Issue Petitions:	0	Total PTA (days):	570
PTO Delay Adjustment:	308		

File Contents History

Number	Date	Contents Description	PTO	APPL	START
67	11/03/2010	ADJUSTMENT OF PTA CALCULATION BY PTO	308		
56.5	08/05/2009	PTA 36 MONTHS			
56	08/25/2009	PATENT ISSUE DATE USED IN PTA CALCULATION			
55	07/20/2009	EXPORT TO FINAL DATA CAPTURE			
54	07/17/2009	DISPATCH TO FDC			
53	07/14/2009	APPLICATION IS CONSIDERED READY FOR ISSUE			
52	07/10/2009	ISSUE FEE PAYMENT VERIFIED			
51	07/10/2009	ISSUE FEE PAYMENT RECEIVED			
50	06/18/2009	FINISHED INITIAL DATA CAPTURE			
49	05/04/2009	SEQUENCE FORWARDED TO PUBS ON TAPE			
48	04/13/2009	EXPORT TO INITIAL DATA CAPTURE			
46	04/10/2009	MAIL NOTICE OF ALLOWANCE			
45	04/09/2009	ISSUE REVISION COMPLETED			
44	04/09/2009	NOTICE OF ALLOWANCE DATA VERIFICATION COMPLETED			
43	04/06/2009	ALLOWED CASE RETURNED TO THE EXAMINER FOR CLERICAL PROCESSING			
42	04/06/2009	DOCUMENT VERIFICATION			
41	04/06/2009	EXAMINER'S AMENDMENT COMMUNICATION			
40	04/06/2009	NOTICE OF ALLOWABILITY			
39	03/05/2009	DATE FORWARDED TO EXAMINER			
38	02/27/2009	AMENDMENT AFTER FINAL REJECTION		30	34
37	02/27/2009	REQUEST FOR EXTENSION OF TIME - GRANTED			
36	02/26/2009	MAIL EXAMINER INTERVIEW SUMMARY (PTOL - 413)			

35	02/24/2009	EXAMINER INTERVIEW SUMMARY RECORD (PTOL - 413)			
34	10/28/2008	MAIL FINAL REJECTION (PTOL - 326)			
33	10/27/2008	FINAL REJECTION			
32	02/08/2008	INFORMATION DISCLOSURE STATEMENT CONSIDERED			
31	07/08/2008	INFORMATION DISCLOSURE STATEMENT CONSIDERED			
30	07/08/2008	REFERENCE CAPTURE ON IDS			
29	08/13/2008	DATE FORWARDED TO EXAMINER			
28	07/08/2008	RESPONSE AFTER NON-FINAL ACTION		91	23
27	07/08/2008	REQUEST FOR EXTENSION OF TIME - GRANTED			
26	07/08/2008	INFORMATION DISCLOSURE STATEMENT (IDS) FILED			
25	02/08/2008	INFORMATION DISCLOSURE STATEMENT (IDS) FILED			
24	02/08/2008	INFORMATION DISCLOSURE STATEMENT (IDS) FILED			
23	01/08/2008	MAIL NON-FINAL REJECTION	383		-1
22	01/07/2008	NON-FINAL REJECTION			
21	12/15/2005	INFORMATION DISCLOSURE STATEMENT CONSIDERED			
17	10/29/2007	PRELIMINARY AMENDMENT			
16	12/15/2005	REFERENCE CAPTURE ON IDS			
15.7	12/15/2005	INFORMATION DISCLOSURE STATEMENT (IDS) FILED			
15	12/15/2005	INFORMATION DISCLOSURE STATEMENT (IDS) FILED			
14	11/30/2005	CLEARED BY L&R (LARS)			
13	11/16/2005	IFW TSS PROCESSING BY TECH CENTER COMPLETE			
12	11/16/2005	CASE DOCKETED TO EXAMINER IN GAU			
11	11/04/2005	REFERRED TO LEVEL 2 (LARS) BY OIPE CSR			
10	11/04/2005	CASE CLASSIFIED BY OIPE			
9	11/03/2005	APPLICATION RETURN FROM OIPE			
8	11/03/2005	APPLICATION IS NOW COMPLETE			
7	11/03/2005	APPLICATION RETURN TO OIPE			
6	11/02/2005	APPLICATION DISPATCHED FROM OIPE			
5	11/03/2005	APPLICATION IS NOW COMPLETE			
4	11/01/2005	IFW SCAN & PACR AUTO SECURITY REVIEW			

3	10/31/2005	CRF IS GOOD TECHNICALLY / ENTERED INTO DATABASE			
2	10/21/2005	CRF DISK HAS BEEN RECEIVED BY PREEXAM / GROUP / PCT			
1	10/21/2005	INITIAL EXAM TEAM NN			

Search Another: Application# Search

EXPLANATION OF PTA CALCULATION

EXPLANATION OF PTE CALCULATION

To go back, right click here and select Back. To go forward, right click here and select Forward. To refresh, right click here and select Refresh.

Back to OASIS | Home page

UNITED STATES PATENT AND TRADEMARK OFFICE

Commissioner for Patents
United States Patent and Trademark Office
P.O. Box 1450
Alexandria, VA 22313-1450
www.uspto.gov

FISH & RICHARDSON P.C.
P.O. BOX 1022
MINNEAPOLIS MN 55440-1022

MAILED
JAN 13 2011
OFFICE OF PETITIONS

In re Patent No. 7,452,723	: DECISION ON REQUEST FOR
COFFEY et al.	: RECONSIDERATION OF
Issue Date: 11/18/2008	: PATENT TERM ADJUSTMENT
Application No. 11/255,849	: AND
Filed: 10/21/2005	: NOTICE OF INTENT TO ISSUE
Attorney Docket No. 16596-004003	: CERTIFICATE OF CORRECTION

This is a decision on the RESPONSE TO DECISION ON REQUEST FOR RECONSIDERATION OF PATENT TERM ADJUSTMENT, filed August 25, 2009, requesting that the patent term adjustment indicated on the above-identified patent be corrected to indicate that the term of the above-identified patent is extended or adjusted by four hundred nine (409) days.

The petition to correct the patent term adjustment indicated on the above-identified patent to indicate that the term of the above-identified patent is extended or adjusted by **four hundred nine (409) days** is **GRANTED**.

The Office acknowledges the previous submission of the $200.00 fee set forth in 37 CFR 1.18(e). No additional fees are required.

The application is being forwarded to the Certificates of Correction Branch for issuance of a certificate of correction. The Office will issue a certificate of correction indicating that the term of the above-identified patent is extended or adjusted by **four hundred nine (409) days**.

Telephone inquiries specific to this matter should be directed to the undersigned at (571) 272-3211.

Christina Tartera Donnell

Christina Tartera Donnell
Senior Petitions Attorney
Office of Petitions

Enclosure: Copy of DRAFT Certificate of Correction

UNITED STATES PATENT AND TRADEMARK OFFICE

CERTIFICATE OF CORRECTION

PATENT : 7,452,723 B2

DATED : Nov. 18, 2008 **DRAFT**

INVENTOR(S) : Coffey et al.

It is certified that error appears in the above-identified patent and that said Letters Patent is hereby corrected as shown below:

On the cover page,

[*] Notice: Subject to any disclaimer, the term of this patent is extended or adjusted under 35 U.S.C. 154(b) by 381 days.

Delete the phrase "by 381 days" and insert – by 409 days--

UNITED STATES PATENT AND TRADEMARK OFFICE

Commissioner for Patents
United States Patent and Trademark Office
P.O. Box 1450
Alexandria, VA 22313-1450
www.uspto.gov

BACHMAN & LAPOINTE, P.C.
900 CHAPEL STREET
SUITE 1201
NEW HAVEN CT 06510

MAILED
AUG 01 2011
OFFICE OF PETITIONS

In re Patent No. 7,044,038 :
Issued: May 16, 2006 :
Application No.: 11/255,907 : NOTICE
Filed: October 21, 2005 :
Attorney Docket No: **03-480-2** :

This is a notice regarding your request for acceptance of a fee deficiency submission under 37 CFR 1.28. On September 1, 1998, the Court of Appeals for the Federal Circuit held that 37 CFR 1.28(c) is the sole provision governing the time for correction of the erroneous payment of the issue fee as a small entity. **See DH Technology v. Synergystex International, Inc. 154 F.3d 1333, 47 USPQ2d 1865 (Fed. Cir. Sept. 1, 1998).**

The Office no longer investigates or rejects original or reissue applications under 37 CFR 1.56. **1098 Off. Gaz. Pat. Office 502 (January 3, 1989)**. Therefore, nothing in this Notice is intended to imply that an investigation was done.

Your fee deficiency submission under 37 CFR 1.28 is hereby **ACCEPTED**.

This application is no longer entitled to small entity status. Accordingly, all future fees paid in this application must be paid at the large entity rate.

Inquiries related to this communication should be directed to the undersigned at (571) 272-3222.

/Kenya A. McLaughlin/

Kenya A. McLaughlin
Petitions Attorney
Office of Petitions

UNITED STATES PATENT AND TRADEMARK OFFICE

UNITED STATES DEPARTMENT OF COMMERCE
United States Patent and Trademark Office
Address: COMMISSIONER FOR PATENTS
P.O. Box 1450
Alexandria, Virginia 22313-1450
www.uspto.gov

APPLICATION NO.	FILING DATE	FIRST NAMED INVENTOR	ATTORNEY DOCKET NO.	CONFIRMATION NO.
11/256,184	10/24/2005	Kouros Ghandehari	AF01548	6714

7590 01/11/2011
Harrity & Harrity LLP
11350 Random Hills Road
Suite 600
Fairfax, VA 22030

EXAMINER
STARK, JARRETT J

ART UNIT	PAPER NUMBER
2823	

MAIL DATE	DELIVERY MODE
01/11/2011	PAPER

ACKNOWLEDGEMENT OF REQUEST

Notice of Allowance/Allowability Mailed

The request to print a color drawing reference as the first paragraph in the portion of the specification containing a brief description of the drawings as required by 37 CFR 1.84 and MPEP § 608.02 has been received by the United States Patent and Trademark Office and will be entered into the specification.

571-272-4200 or 1-888-786-0101
Application Assistance Unit
Office of Data Management

FORM PTOM327-5 (Rev. 02/08)

UNITED STATES PATENT AND TRADEMARK OFFICE

Commissioner for Patents
United States Patent and Trademark Office
P.O. Box 1450
Alexandria, VA 22313-1450
www.uspto.gov

January 11, 2011

PVF -- ORACLE AMERICA, INC.
C/O PARK, VAUGHAN, FLEMING & DOWLER LLP
2820 FIFTH STREET
DAVIS CA 95618-7759

In re Application of	: **DECISION ON PETITION**
GHANDEHARI, KOUROS	:
Application No. **11/256184**	: **ACCEPTANCE OF COLOR**
Filed: **10/24/2005**	: **DRAWINGS**
Attorney Docket **AF01548**	:

This is a decision on the Petition to Accept Color Drawings under 37 C.F.R 1.84 (a) (2), received in the United States Patent and Trademark Office (USPTO) October 24, 2005.

The petition is **GRANTED**.

A grantable petition under 37 C.F.R. 1.84(a) (2) must be accompanied by the following.

1. The fee set forth under 37 C.F.R. 1.17(h),
2. Three (3) sets of the color drawings in question, or (1) set if filed via EFS, and
3. The specification containing the following language as the first paragraph in that portion of the specification relating to the brief description of the drawings.

   "The file of this patent contains at least one drawing executed in color. Copies of this patent with color drawing(s) will be provided by the Patent and Trademark Office upon request and payment of the necessary fee."

The petition was accompanied by all of the required fees and drawings. The specification contains the appropriate language. Therefore, the petition is GRANTED.

Telephone inquires relating to this decision may be directed to the undersigned in the Office of Data Management at 571-272-4200.

/Bernadette Queen/
Quality Control Specialist
Office of Data Management
Publications Branch

UNITED STATES PATENT AND TRADEMARK OFFICE

Commissioner for Patents
United States Patent and Trademark Office
P.O. Box 1450
Alexandria, VA 22313-1450
www.uspto.gov

OSHA LIANG LLP/Oracle
TWO HOUSTON CENTER
909 FANNIN, SUITE 3500
HOUSTON TX 77010

MAILED
DEC 03 2010
OFFICE OF PETITIONS

In re Application of	:	
Chien Ouyang	:	
Application No. 11/256249	:	ON APPLICATION FOR
Filing or 371(c) Date: 10/21/2005	:	PATENT TERM ADJUSTMENT
Atty Docket No.:	:	
03226/721001; SUN060012	:	

This is in response to the REQUEST FOR RECONSIDERATION OF PATENT TERM ADJUSTMENT PURSUANT TO 35 U.S.C. §154(b) AND IMPLEMENTING REGULATIONS 37 C.F.R. § 1.702(b) AND 1.703(b), filed August 26, 2010. Applicant requests that the Patent Term Adjustment be changed to reflect at least 1017 days, not 429 days as calculated by the Office as of the mailing of the initial determination of patent term adjustment. Applicant requests this correction solely on the basis that the Office will take in excess of three years to issue this patent. The application for patent term adjustment is properly treated under 37 C.F.R. § 1.705(b).

As the instant application for patent term adjustment requests reconsideration of the patent term adjustment as it relates to the Office's failure to issue the patent within 3 years of the filing date, the application for patent term adjustment under 37 CFR 1.705(b) is **DISMISSED as PREMATURE**.

Knowledge of the actual date the patent issues is required to calculate the amount, if any, of additional patent term patentee is entitled to for Office failure to issue the patent within 3 years. See § 1.702(b). (This is true even where a request for continued examination (RCE) was filed). The computer will not undertake the § 1.702(b) calculation until the actual date of issuance of the patent has been determined. Likewise, the computer will not calculate any further Office delay under § 1.702(a)(4) or applicant delay under § 1.704(c)(10) until the actual date of issuance of the patent has been determined. As such, the Office can not make a determination on the correctness of the patent term adjustment until the patent has issued.

Requesting reconsideration of the patent term adjustment to be indicated on the patent under 37 CFR 1.705(b) based on the initial determination of patent term adjustment and a projected issuance date of the patent (or even the filing date of the request for continued examination) is premature. Accordingly, it is appropriate to dismiss as premature such a request.

Rather than file an application for patent term adjustment under 37 CFR 1.705(b) contesting the 37 CFR 1.702(b) calculation at the time of the mailing of the notice of allowance, applicant is advised that they may wait until the time of the issuance of the patent and file a request for reconsideration of the patent term adjustment pursuant to 37 CFR 1.705(d). As the USPTO does not calculate the amount of time earned pursuant to 37 CFR 1.702(b) until the time of the issuance of the patent, the Office will consider any request for reconsideration of the patent term adjustment due to an error in the calculation of 37 CFR 1.702(b) to be timely if the request for reconsideration is filed within two months of the issuance of the patent. However, as to all other bases for contesting the initial determination of patent term adjustment received with the notice of allowance, applicant must timely file an application for patent term adjustment prior to the payment of the issue fee[1].

The Office acknowledges submission of the $200.00 fee set forth in 37 CFR 1.18(e) for consideration of the application for patent term adjustment under 37 CFR 1.705(b).

Any request for reconsideration of the patent term adjustment indicated on the patent must be timely filed within 2 months after issuance pursuant to 37 CFR 1.705(d) and ***must*** include payment of the required fee under 37 CFR 1.18(e).

The Office of Data Management has been advised of this decision. This application is being referred to the Office of Data Management for issuance of the patent.

Telephone inquiries specific to this decision should be directed to the undersigned at (571) 272-3232.

/DLW/

Derek L. Woods
Attorney
Office of Petitions

---

[1] For example, if applicant disputes both the calculation of patent term adjustment under 37 CFR 1.702(a)(1) for Office failure to mail a first Office action or notice of allowance not later than fourteen months after the date on which the application was filed and under 37 CFR 1.702(b) for Office failure to issue a patent within three years of the actual filing date of the application, then applicant must still timely file an application for patent term adjustment prior to the payment of the issue fee to contest the calculation of Office delay in issuing a first Office action or notice of allowance. See 37 CFR 1.705(b) and 35 U.S.C. 154(b)(3)(B). A dispute as to the calculation of the §1.702(a)(1) period raised on request for reconsideration of patent term adjustment under 37 CFR 1.705(d) will be dismissed as untimely filed.

UNITED STATES PATENT AND TRADEMARK OFFICE

Commissioner for Patents
United States Patent and Trademark Office
P.O. Box 1450
Alexandria, VA 22313-1450
www.uspto.gov

LICATA & TYRRELL, P.C.
66 E. MAIN STREET
MARLTON, NJ 08053

MAILED

AUG 26 2011

OFFICE OF PETITIONS

In re Patent No. 7,780,963 :
Issue Date: August 24, 2010 :
Application No. 11/256,332 : ON PETITION
Filed: October 21, 2005 :
Patentee(s): Paul Acton, et. al. :

This is a decision on the request under 37 CFR 3.81(b), filed July 28, 2011, to correct the name of the assignee name on the front page of the above patent by way of a Certificate of Correction.

The request is **DISMISSED**.

Petitioner states that the correct assignee's name is "Merck Sharp & Dohme Corp." and that an incorrect assignee's name was unintentionally included on the Fee(s) Transmittal form PTOL-85(b) at the time of payment of the issue fee. Accordingly, petitioner requests that the patent issue to "Merck Sharp & Dohme Corp."

37 CFR 3.81(b), effective June 25, 2004, reads:

> *After payment of the issue fee:* Any request for issuance of an application in the name of the assignee submitted after the date of payment of the issue fee, and any request for a patent to be corrected to state the name of the assignee, must state that the assignment was submitted for recordation as set forth in § 3.11 before issuance of the patent, and must include a request for a certificate of correction under § 1.323 of this chapter (accompanied by the fee set forth in § 1.20(a) and the processing fee set forth in § 1.17(i) of this chapter.

The present request fails to contain the statement that "the assignment was submitted for recordation as set forth in § 3.11 before issuance of the patent." Also, while petitioner submitted the $130 processing fee and $100 Certificate of Correction fee, the present request under 37 CFR 3.81(b) was not accompanied by a request for a Certificate of

Correction as required by 3.81(b)[1]. Therefore, since petitioner has failed to comply with the provisions of 37 CFR 3.81(b), the request cannot be granted at this time.

Further correspondence with respect to this matter should be addressed as follows:

By mail: Mail Stop PETITION
Commissioner for Patents
P. O. Box 1450
Alexandria, VA 22313-1450

By hand: U. S. Patent and Trademark Office
Customer Service Window, Mail Stop Petitions
Randolph Building
401 Dulany Street
Alexandria, VA 22314

The centralized facsimile number is (571) 273-8300.

Correspondence regarding this decision may also be filed through the electronic filing system of the USPTO.

Telephone inquiries concerning this decision should be directed to the undersigned at (571) 272-3226.

Andrea Smith
Petitions Examiner
Office of Petitions

Enclosure: Certificate of Correction Form No. PTO/SB/44

[1] A Certificate of Correction form (PTO/SB/44) is enclosed with this decision.

SPE RESPONSE FOR CERTIFICATE OF CORRECTION

Paper No.: _____

DATE : 2/15/11

TO SPE OF : ART UNIT 1648

SUBJECT : Request for Certificate of Correction for Appl. No.: 11/256,352 Patent No. 7,521,220

CofC mailroom date 2/8/11

Please respond to this request for a certificate of correction within 7 days.

FOR IFW FILES:

Please review the requested changes/corrections as shown in the **COCIN** document(s) in the IFW application image. No new matter should be introduced, nor should the scope or meaning of the claims be changed.

Please complete the response (see below) and forward the completed response to scanning using document code **COCX**.

FOR PAPER FILES:

Please review the requested changes/corrections as shown in the attached certificate of correction. Please complete this form (see below) and forward it with the file to:

Certificates of Correction Branch (CofC)
Randolph Square – 9D10-A
Palm Location 7580

Ernest C. White, LIE
Certificates of Correction Branch
703-756-1814

Thank You For Your Assistance

The request for issuing the above-identified correction(s) is hereby:
Note your decision on the appropriate box.

xApproved	**All** changes apply.
❑ **Approved in Part**	Specify below which changes **do not** apply.
❑ **Denied**	State the reasons for denial below.

Comments:

/Zachariah Lucas/ 1648

SPE **Art Unit**

UNITED STATES PATENT AND TRADEMARK OFFICE

Commissioner for Patents
United States Patent and Trademark Office
P.O. Box 1450
Alexandria, VA 22313-1450
www.uspto.gov

MAILED
FEB 13 2012
OFFICE OF PETITIONS

SMYRSKI LAW GROUP, A PROFESSIONAL CORPORATION
3310 AIRPORT AVENUE, SW
SANTA MONICA CA 90405

In re Application of :
Imrey, et al. :
Application No. 11/256,405 : ON PETITION
Filed: October 19, 2005 :
Attorney Docket No. **APOL0006**

This is a decision on the petition to withdraw the holding of abandonment under 37 CFR 1.181(a), filed January 26, 2012.

The petition is **granted**.

The above-identified application became abandoned for failure to reply to the Notice of Allowance and Issue Fee Due mailed September 28, 2011, which set a statutory period for reply of three (3) months from its mailing date. No response was received within the allowable period, and the application became abandoned on December 29, 2011. A Notice of Abandonment was mailed on January 13, 2012.

When, as in this case petitioner is arguing that an Office communication was not received, petitioner must establish non-receipt of the Office communication in accordance with section 711.03(c) of the *Manual of Patent Examining Procedure* that requires the following:

> To minimize costs and burdens to practitioners and the Office, the Office has modified the showing required to establish nonreceipt of an Office action. The showing required to establish nonreceipt of an Office communication must include a statement from the practitioner describing the system used for recording an Office action received at the correspondence address of record with the USPTO. The statement should establish that the docketing system is sufficiently reliable. It is expected that the record would include, but not be limited to, the application number, attorney docket number, the mail date of the Office action and the due date for the response.
>
> Practitioner must state that the Office action was not received at the correspondence address of record, and that a search of the practitioner's record(s), including any file jacket or the equivalent, and the application contents, indicates that the Office action was not received. A copy of the record(s) used by the practitioner

> where the non-received Office action would have been entered had it been received is required. A copy of the practitioner's record(s) required to show non-receipt of the Office action should include the master docket for the firm. That is, if a three month period for reply was set in the nonreceived Office action, a copy of the master docket report showing all replies docketed for a date three months from the mail date of the nonreceived Office action must be submitted as documentary proof of nonreceipt of the Office action. If no such master docket exists, the practitioner should so state and provide other evidence such as, but not limited to, the following: the application file jacket; incoming mail log; calendar; reminder system; or the individual docket record for the application in question.

Petitioner has met the burden of proof as established by Section 711.03(c)(II) of the MPEP. The holding of abandonment is, therefore, withdrawn.

The application file is being forwarded to Technology Center, GAU 3691 for further processing that will include re-mailing the Notice of Allowance and Issue Fee Due and resetting of the period for reply.

Questions concerning this decision should be directed to the undersigned at (571) 272-3222.

/Kenya A.McLaughlin/

Kenya A. McLaughlin
Petitions Attorney
Office of Petitions

UNITED STATES PATENT AND TRADEMARK OFFICE

Commissioner for Patents
United States Patent and Trademark Office
P.O. Box 1450
Alexandria, VA 22313-1450
www.uspto.gov

Womble Carlyle Sandridge & Rice LLP
Attention: IP Docketing
P.O. Box 7037
Atlanta GA 30357-0037

MAILED
JAN 24 2012
OFFICE OF PETITIONS

In re Application of	:	
Charles L. Niblett	:	
Application No. 11/256,428	:	DECISION ON PETITION
Filed: October 21, 2005	:	
Attorney Docket No. S305 1100.1	:	

This is a decision on the petition under the unintentional provisions of 37 CFR 1.137(b), filed December 15, 2011, to revive the above-identified application.

The petition is **GRANTED**.

The application became abandoned for failure to reply in a timely manner to the Notice of File Corrected Application Papers, mailed May 20, 2011. The Notice set a period for reply of two (2) months from the mail date of the Notice. No extensions of time under the provisions of 37 CFR 1.136(a) were obtained. Accordingly, the application became abandoned on July 21, 2011. A Notice of Abandonment was mailed on December 7, 2011.

The petition satisfies the requirements of 37 CFR 1.137(b) in that petitioner has supplied (1) the reply in the form of payment of the issue fee of $1,510 and the publication fee of $300 and an amendment (2) the petition fee of $1,860, and (3) a proper statement of unintentional delay. Accordingly, the issue and publication fees and amendment are accepted as being unintentionally delayed.

Telephone inquiries concerning this decision should be directed to Kimberly Inabinet at (571) 272-4618.

This application is being referred to the Office of Data Management for further processing into a patent.

/Kimberly A. Inabinet/

Kimberly A. Inabinet
Petitions Examiner
Office of Petitions

OK TO ENTER: /DN/ (08/04/2010)

Attorney Docket No. ES-0405.2 (189299/US/3)

IN THE UNITED STATES PATENT AND TRADEMARK OFFICE

In re the Application of:	
Edmund F. Petruzzelli	Examiner: Nguyen, Hai V.
Application No. 11/256,472	Art Unit: 2618
Filed: October 20, 2005	Confirmation No. 7709
For: METHOD AND DEVICE FOR BAND TRANSLATION	

AMENDMENT UNDER 37 CFR § 1.312

Mail Stop AMENDMENT
Commissioner for Patents
P.O. Box 1450
Alexandria, VA 22313-1450

Sir:

Prior to issuance, please amend the above-identified application as follows:

Amendments to the Specification begin on page 2 of this paper.

Amendments to the Drawings begin on page 4 of this paper.

Remarks begin on page 5 of this paper.

An **Appendix** including replacement and annotated drawing sheets is attached following page 5 of this paper.

UNITED STATES PATENT AND TRADEMARK OFFICE

Commissioner for Patents
United States Patent and Trademark Office
P.O. Box 1450
Alexandria, VA 22313-1450
www.uspto.gov

Patent No. : RE42,498 E
Ser. No. : 11/256,619
Inventor(s) : Tang et al.
Issued : Jun. 28, 2011
Title : WIDE IMAGE SCANNER
Docket No. : 320528183US1
Re: Request for Certificate of Correction

Consideration has been given your request for the issuance of a certificate of correction for the above-identified patent under the provisions of Rule(s) 1.322 and/or 1.323.

Assignees' names and addresses (assignment data) printed in a patent, are based *solely* on information supplied in the appropriate space for identifying the assignment data, i.e., item 3 of the Issue Fee Transmittal Form PTOL-85B. Granting of a request under 37 CFR 3.81(b) is required to correct applicant's error providing ***incorrect or erroneous*** assignment data, *before* issuance of a Certificate of Correction, under 37 CFR 1.323 *(see Manual of Patent Examining Procedures (M.P.E.P) Chp.1400, sect. 1481).* This procedure is required *at any time after the issue fee is paid*, including after issuance of the patent.

In view of the foregoing, your request, in this matter, is hereby denied.

A request to correct the Assignee under 37 CFR 3.81(b) should include:

A. **the processing fee set forth in 37 CFR 1. 17(i) (currently $130);**
B. a statement that the failure to include the correct assignee name on the PTOL-85B was inadvertent; and
C. a copy of the Notice of Recordation of Assignment Document, reflecting the reel and frame number where the assignment(s) is recorded and/or reflecting proof of *the date* the assignment was submitted for recordation.

In the Request, Applicant(s) may request that the file be forwarded to Certificates of Correction Branch, for issuance of a Certificate of Correction, if the Request is granted.

Any request under 37 CFR 3.81(b) should be directed to the following address or facsimile number:

By mail: Mail Stop PETITIONS
Commissioner for Patents
Post Office Box 1450
Alexandria, VA 22313-1450

By hand: Customer Service Window
Mail Stop Petitions
Randolph Building
401 Dulany Street
Alexandria, VA 22314

By fax: (703) 872-9306
ATTN: Office of Petitions

If a fee (currently $100) was previously submitted for consideration of a Request for Certificate of Correction, under CFR 1.323, to correct assignment data, no additional fee is required.

Ennis Young
For Mary Diggs
Decisions & Certificates
of Correction Branch
(571) **272-3435** or (703) 756-1814

UNITED STATES PATENT AND TRADEMARK OFFICE

Commissioner for Patents
United States Patent and Trademark Office
P.O. Box 1450
Alexandria, VA 22313-1450
www.uspto.gov

STEVEN L. SCHMID
1824 HICKORY TRACE DRIVE
FLEMING ISLAND, FL 32003

MAILED
MAY 26 2011
OFFICE OF PETITIONS

In re Application of	:	
Eduardo Chapeta	:	
Application No. 11/256,635	:	DECISION ON PETITION
Filed: October 21, 2005	:	
Attorney Docket No.: UD103.1	:	

This is a decision in response to the petition, filed April 19, 2011, under 37 CFR 1.181 (no fee) requesting withdrawal of the holding of abandonment in the above-identified application.

The petition is **GRANTED**.

This application was held abandoned for a failure to reply in a timely manner to a final Office action mailed September 9, 2010. A Notice of Abandonment was mailed on March 11, 2011. On April 19, 2011, the present petition was file. Petitioner argues that the abandonment should be withdrawn, since a timely reply was filed. (RCE), an Amendment and a 3-month petition for extension of time were filed on November 24, 2010.

A review of the application file confirms receipt of an amendment and appropriate petition for extension of time on March 15, 2011, as they are present among the papers contained in the file. It is further noted that the requisite extension fees have been paid and a proper Certificate of Mailing under 37 CFR 1.8 dated March 9, 2011 was included on the amendment and extension of time request. Accordingly, the response is considered a timely reply to the September 9, 2010 Office action.

In view of the above, the Notice of Abandonment is hereby vacated and the holding of abandonment is withdrawn.

This application is being referred to Technology Center AU 3684 for appropriate action by the Examiner in the normal course of business on the amendment filed March 15, 2011.

Telephone inquiries concerning this decision may be directed to the undersigned at (571) 272-3204. Inquiries regarding further prosecution of this application should be directed to the Technology Center.

/SDB/

Sherry D. Brinkley
Petitions Examiner
Office of Petitions

UNITED STATES PATENT AND TRADEMARK OFFICE

Commissioner for Patents
United States Patent and Trademark Office
P.O. Box 1450
Alexandria, VA 22313-1450
www.uspto.gov

STEVEN L. SCHMID
1824 HICKORY TRACE DRIVE
FLEMING ISLAND, FL 32003

MAILED
NOV 16 2011
OFFICE OF PETITIONS

In re Application of :
Eduardo Chapeta :
Application No. 11/256,635 : ON PETITION
Filed: October 21, 2005 :
Attorney Docket No.: UD103.1 :

This is a decision in response to the petition, filed October 27, 2011, under the provisions of 37 CFR 1.181 (no fee) to withdraw the holding of abandonment in the above-identified application.

The petition is **DISMISSED**.

The application became abandoned for a failure to timely reply within the meaning of 37 CFR 1.113 to the final Office action, mailed September 9, 2010, which set a shortened statutory period for reply of three (3) months. On March 15, 2011, using a Certificate of Mailing dated March 9, 2011, applicant submitted a response, including, *inter alia*, an appropriate petition for extension of time. On July 1, 2011, an Advisory Action was mailed. Thereafter, on January 19, 2011, a Notice of Abandonment was mailed.

On October 27, 2011, the present petition was filed, wherein petitioner states that the abandonment should be withdrawn. Petitioner argues that the advisory action of July 1, 2011 issued in response to an RCE and explains that "the statutory term for response is six months, with the term ending January 1, 2010 from the issuance of the response to an RCE."

Petitioner's argument is not well taken. A review of the record discloses that the Advisory Action of July 1, 2011 issued in response to the amendment filed on March 15, 2011, not as a result of a Request for Continued Application. The full six month statutory term for the amendment was granted in view of the petition for extension of time filed March 15, 2011, using a Certificate of Mailing dated March 9, 2011.

Petitioner is reminded that an acceptable reply to the final Office action would have been a Notice of Appeal (and appeal fee required by 37 CFR 41.20(b)(2), an amendment that *prima facie* places the application in condition for allowance, a Request for Continued Examination and submission (37 CFR 1.114), or the filing of a continuing application under 37 CFR 1.53(b). In this case applicant filed an amendment that did not place the application in condition for allowance.

Pursuant to 35 U.S.C. 133, "[u]pon failure of the applicant to prosecute the application within six months after any action therein, of which notice has been given or mailed to the application, or

within such shorter time, not less than thirty days, as fixed by the Director in such action, the application shall be regarded as abandoned by the parties thereto, unless it be shown to satisfactory of the Director that such delay was unavoidable.

The evidence of record does not demonstrate that such delay in filing an acceptable response to the final Office action of September 9, 2010 was unavoidable within the meaning of the rule. Without an acceptable reply, the application became abandoned by operation of law on March 10, 2011. Accordingly, the abandonment will not be withdrawn.

Petitioner is encouraged to consider filing a petition under 37 CFR 1.137(b) to revive an unintentionally abandoned application instead of filing a renewed petition under 37 CFR 1.181 or a petition under 37 CFR 1.137(a).

Public Law 97-247, § 3, 96 Stat. 317 (1982), which revised patent and trademark fees, amended 35 U.S.C. § 41(a)(7) to provide for the revival of an "unintentionally" abandoned application without a showing that the delay in prosecution or in late payment of the issue fee was "unavoidable." This amendment to 35 U.S.C. § 41(a)(7) has been implemented in 37 CFR 1.137(b).

A grantable petition under 37 CFR 1.137(b) must be accompanied by: (1) the required reply, unless previously filed; (2) the petition fee as set forth in 37 CFR 1.17(m); (3) a statement that the entire delay in filing the required reply from the due date for the reply until the filing of a grantable petition pursuant to 37 CFR 1.137(b) was unintentional; and (4) any terminal disclaimer (and fee as set forth in 37 CFR 1.20(d)) required by 37 CFR 1.137(c). Where there is a question as to whether either the abandonment or the delay in filing a petition under 37 CFR 1.137 was unintentional, the Director may require additional information. See MPEP 711.03(c)(II)(C) and (D).

Any request for reconsideration of this decision must be submitted within **TWO (2) MONTHS** from the mail date of this decision. Extensions of time under 37 CFR 1.136(a) are permitted. The reconsideration request should include a cover letter entitled "Renewed Petition under 37 CFR 1.137(b)." This is **not** a final agency action within the meaning of 5 U.S.C. § 704.

Further correspondence with respect to this matter should be delivered through one of the following mediums:

By mail: Mail Stop PETITIONS
Commissioner for Patents
Post Office Box 1450
Alexandria, VA 22313-1450

By hand: Customer Service Window
Mail Stop Petitions
Randolph Building
401 Dulany Street
Alexandria, VA 22314

By fax: (571) 273-8300
ATTN: Office of Petitions

By Internet: EFS-Web[1]

Any questions concerning this matter may be directed to the undersigned at (571) 272-3204.

/SDB/

Sherry D. Brinkley
Petitions Examiner
Office of Petitions

[1] www.uspto.gov/ebc/efs_help.html (for help using EFS-Web call the Patent Electronic Business Center at (866) 217-9197)

UNITED STATES PATENT AND TRADEMARK OFFICE

Commissioner for Patents
United States Patent and Trademark Office
P.O. Box 1450
Alexandria, VA 22313-1450
www.uspto.gov

PHILIP S. JOHNSON
JOHNSON & JOHNSON
ONE JOHNSON & JOHNSON PLAZA
NEW BRUNSWICK NJ 08933-7003

MAILED
NOV 30 2011
OFFICE OF PETITIONS

In re Patent No. 7,875,036	:	
Issued: January 25, 2011	:	
Application No. 11/256,768	:	NOTICE
Filed: October 24, 2005	:	
Attorney Docket No. ETH5294USNP	:	

This is in response to the paper filed December 15, 2010 under 37 CFR 1.27 requesting that status as a Small Entity be removed.

In accordance with the December 15, 2010 request, status as a Small Entity has been removed.

This patent is no longer entitled to small entity status. Accordingly, all future fees paid in this patent must be paid at the large entity rate.

Telephone inquiries concerning this decision should be directed to the undersigned at (571) 272-7751.

/Joan Olszewski/
Joan Olszewski
Petitions Examiner
Office of Petitions

UNITED STATES PATENT AND TRADEMARK OFFICE

Commissioner for Patents
United States Patent and Trademark Office
P.O. Box 1450
Alexandria, VA 22313-1450
www.uspto.gov

MAILED

NOV 18 2010

OFFICE OF PETITIONS

JACKSON INTELLECTUAL PROPERTY GROUP PLLC
106 STARVALE LANE
SHIPMAN, VA 22971

In re Application of Wilson Wei Application No.: 11/256,773 Filed: October 25, 2005 Attorney Docket No.: 7012.108	: : : : :	ON PETITION

This is a decision in response to the petition, filed September 9, 2010, to revive the above-identified application under the provisions of 37 CFR 1.137(b).

The petition is **GRANTED**.

The application became abandoned for failure to timely pay the issue and publication fees on or before December 18, 2006, as required by the Notice of Allowance and Fee(s) Due mailed September 18, 2006. A Notice of Abandonment was mailed on January 17, 2007. On September 9, 2010, the present petition was filed.

This application has been abandoned for an extended period of time. The U.S. Patent and Trademark Office is relying on petitioner's duty of candor and good faith and accepting the statement that "the entire delay in filing the required reply from the due date for the reply until the filing of a grantable petition pursuant to 37 CFR 1.137(b) was unintentional." *See* Changes to Patent Practice and Procedure, 62 Fed. Reg., at 53160 and 53178; 1203 Off. Gaz. Pat. Office, at 88 and 103 (responses to comments 64 and 109) (applicant obligated under 37 CFR 10.18 to inquire into the underlying facts and circumstances when providing the statement required by 37 CFR 1.137(b) to the U.S. Patent and Trademark Office).

The petition satisfies the requirements of 37 CFR 1.137(b) in that petitioner has supplied (1) the reply in the form of payment of the issue fee of $755 and the publication fee of $300; (2) the petition fee of $810; and (3) an adequate showing and statement of unintentional delay.

This application is being referred to the Office of Data Management for processing into a patent.

Telephone inquiries concerning this decision should be directed to the undersigned at (571) 272-3204. Telephone inquiries related to processing as a patent should be directed to (571) 272-4200.

Sherry D. Brinkley
Petitions Examiner
Office of Petitions

UNITED STATES PATENT AND TRADEMARK OFFICE

Commissioner for Patents
United States Patent and Trademark Office
P.O. Box 1450
Alexandria, VA 22313-1450
www.uspto.gov

R. DOUGLAS DERBY
307 WILSHIRE DR.
EULESS TX 76040

MAILED
NOV 02 2010
OFFICE OF PETITIONS

In re Application of :
Derby, R. Douglas :
Application No. 11/256,781 : ON PETITION
Filed: October 24, 2005 :
Title: Mechanical Leaf Raking and Bagging Device :

This is a decision on the renewed petition under 37 C.F.R. § 1.137(b), filed August 19, 2010, to revive the above-identified application.

The petition is **DISMISSED**.

The above-identified application became abandoned for failure to reply in a timely and proper manner to the final Office action mailed April 28, 2008. No extensions of time under the provisions of 37 CFR 1.136(a) were obtained. Accordingly, the above-identified application became abandoned on July 29, 2008. A Notice of Abandonment was mailed on November 3, 2008.

A grantable petition under 37 CFR 1.137(b) must be accompanied by:
(1) the required reply,[1]
(2) the petition fee,
(3) a statement that the entire delay in filing the required reply from the due date for the reply until the filing of a grantable petition pursuant to 37 CFR 1.137(b) was unintentional, and
(4) a terminal disclaimer and fee if the application was filed on or before June 8, 1995 or if the application is a design application.

Where there is a question as to whether either the abandonment or the delay in filing a petition under 37 CFR 1.137 was unintentional, the Commissioner may require additional information.[2]

The instant petition continues to lack item(s) (1). The amendment submitted on August 19, 2010 is not fully responsive to the Office action. An explanation of how the amendment is not fully responsive from the examiner of record is enclosed.

Further correspondence with respect to this matter should be addressed as follows:

---

[1] In a nonprovisional application abandoned for failure to prosecute, the required reply may be met by the filing of a continuing application. In an application or patent, abandoned or lapsed for failure to pay the issue fee or any portion thereof, the required reply must be the payment of the issue fee or any outstanding balance thereof.

[2] See MPEP 711.03(c)(III)(C) and (D).

By mail: Mail Stop PETITIONS
Commissioner for Patents
Post Office Box 1450
Alexandria, VA 22313-1450

By hand: Customer Window located at:

U.S. Patent and Trademark Office
Customer Service Window Randolph Building
401 Dulany Street
Alexandria, VA 22314

By fax: (571) 273-8300
ATTN: Office of Petitions

Any questions concerning this matter may be directed to the undersigned at (571) 272-3206.

Liana Walsh
Petitions Examiner
Office of Petitions

Enclosure: PTO-90C

UNITED STATES DEPARTMENT OF COMMERCE
U.S. Patent and Trademark Office
Address: COMMISSIONER FOR PATENTS
P.O. Box 1450
Alexandria, Virginia 22313-1450

APPLICATION NO./ CONTROL NO.	FILING DATE	FIRST NAMED INVENTOR / PATENT IN REEXAMINATION	ATTORNEY DOCKET NO.
11256781	10/24/2005	DERBY, R. DOUGLAS	

EXAMINER
ALICIA M. TORRES

ART UNIT	PAPER
3671	20101027

DATE MAILED:

R. Douglas Derby
307 Wilshire Dr.
Euless, TX 76040

Please find below and/or attached an Office communication concerning this application or proceeding.

Commissioner for Patents

Response to Amendment
The reply filed on 8/19/2010 is not fully responsive to the prior Office Action because of the following omission(s) or matter(s): the claim set of 8/19/10 is not amended relative to the most recent entered set of claims 11/13/2007. The claim sets dated 7/24/2008 and 10/09/2008 were not entered into the record and therefore amendments should not be made relative to these claims sets. Instead, amendments to the claims should be made relative to the most recently entered claim set of 11/13/2007. See 37 CFR 1.111. Since the above-mentioned reply appears to be bona fide, applicant is given ONE (1) MONTH or THIRTY (30) DAYS from the mailing date of this notice, whichever is longer, within which to supply the omission or correction in order to avoid abandonment. EXTENSIONS OF THIS TIME PERIOD MAY BE GRANTED UNDER 37 CFR 1.136(a).

/Alicia M Torres/
Primary Examiner, Art Unit 3671

UNITED STATES PATENT AND TRADEMARK OFFICE

UNITED STATES DEPARTMENT OF COMMERCE
United States Patent and Trademark Office
Address: COMMISSIONER FOR PATENTS
P.O. Box 1450
Alexandria, Virginia 22313-1450
www.uspto.gov

APPLICATION NO.	FILING DATE	FIRST NAMED INVENTOR	ATTORNEY DOCKET NO.	CONFIRMATION NO.
11/256,806	10/24/2005	Maryam Bernacki	CTE-10202/16	9114

25006 7590 08/09/2010
GIFFORD, KRASS, SPRINKLE,ANDERSON & CITKOWSKI, P.C
PO BOX 7021
TROY, MI 48007-7021

EXAMINER
THAI, HANH B

ART UNIT	PAPER NUMBER
2163	

MAIL DATE	DELIVERY MODE
08/09/2010	PAPER

Please find below and/or attached an Office communication concerning this application or proceeding.

The time period for reply, if any, is set in the attached communication.

UNITED STATES PATENT AND TRADEMARK OFFICE

COMMISSIONER FOR PATENTS
UNITED STATES PATENT AND TRADEMARK OFFICE
P.O. BOX 1450
ALEXANDRIA, VA 22313-1450
www.uspto.gov

John G. Posa
Gifford, Krass, Sprinkle et al
P.O. Box 7021
Troy, MI 48007-7021

In re Application of:
Maryam BERNACKI et al.
Application No. 11/256,806
Filed: October 24, 2005
For: REPORTING TOOLS

DECISION ON PETITION
UNDER 37 CFR § 1.48(a)

This is a decision on the petition, filed on 03 August 2010, under 37 C.F.R. § 1.48(a).

The petition is **GRANTED**.

The application is being forward to Technology Center Support Staff to remove inventor Matthew M. Miller in the PALM database and to mail a corrected filing receipt.

/Vincent N. Trans/
Vincent N. Trans, SPRE/QAS
Technology Center 2100
Computer Architecture and Software
571-272-3613

UNITED STATES PATENT AND TRADEMARK OFFICE

Commissioner for Patents
United States Patent and Trademark Office
P.O. Box 1450
Alexandria, VA 22313-1450
www.uspto.gov

Lena T. Van Asdale
2573 Rampart Terrace
Reno NV 89519

MAILED

JAN 24 2012

OFFICE OF PETITIONS

In re Application of :
VAN ASDALE, SHAWN MICHAEL :
Application No. 11/256,848 : ON PETITION
Filed: 10/24/2005 :
Attorney Docket No. SHAWN 1A :

This is in response to the petition under 37 CFR 1.137(b), filed November 12, 2010, to revive the above-identified application.

The petition is **GRANTED**.

This application became abandoned for failure to timely pay the issue fee and publication fee within the statutory period of three months from the September 7, 2010 mailing date of the Notice of Allowance and Fees Due. The Office mailed a Notice of Abandonment on September 20, 2010.

The petition satisfies the requirements of 37 CFR 1.137(b) in that petitioner has supplied: (1) the reply in the form of payment of the issue fee and publication fee; (2) the petition fee; and (3) a proper statement of unintentional delay.

This application is being referred to the Office of Data Management for processing into a patent.

Telephone inquiries specifically concerning this decision should be directed to the undersigned at (571) 272-3211.

C. T. Donnell

Christina Tartera Donnell
Senior Petitions Attorney
Office of Petitions

SPE RESPONSE FOR CERTIFICATE OF CORRECTION

Paper No.: _____

DATE : July 23 2008

TO SPE OF : ART UNIT 1752

SUBJECT : Request for Certificate of Correction for Appl. No 11/256852 patent no7314704

Please respond to this request for a certificate of correction within 7 days.

Please review the requested changes/corrections as shown in the **COCIN** document(s) in the IFW application image. No new matter should be introduced, nor should the scope or meaning of the claims be changed.

Please complete the response (see below) and forward the completed response to scanning using document code **COCX**

Magdalene Talley

Certificates of Correction Branch

703-308-9390 ext. 116

Thank You For Your Assistance

The request for issuing the above-identified correction(s) is hereby:

Note your decision on the appropriate box.

- ☒ **Approved** — **All** changes apply.
- ☐ **Approved in Part** — Specify below which changes **do not** apply.
- ☐ **Denied** — State the reasons for denial below.

Comments: _____

Cynthia Kelly 1722

SPE **Art Unit**

UNITED STATES PATENT AND TRADEMARK OFFICE

Commissioner for Patents
United States Patent and Trademark Office
P.O. Box 1450
Alexandria, VA 22313-1450
www.uspto.gov

AEXIUS, LLC
904 Silver Spur Rd. #310
Rolling Hills Estates CA 90274

MAILED

OCT 08 2010

OFFICE OF PETITIONS

In re Application of :
Coleman :
Application No. 11/256,890 :
Filed: October 24, 2005 :
Attorney Docket No. US19387 :

ON PETITION

This decision is mailed in response to the petition under 37 CFR 1.137(b), filed May 12, 2010, to revive the above-identified application under the unintentional delay standard. In addition, petitioner requests withdrawal of the holding of abandonment in the above-identified application. This request will be treated as a feeless petition under 37 CFR 1.181.

The petition under 37 CFR 1.181 is **DISMISSED**.

The petition under 37 CFR 1.137(b) is **DISMISSED**.

Any request for reconsideration of this decision must be submitted within TWO (2) MONTHS from the mail date of this decision. Extensions of time under 37 CFR 1.136(a) are permitted. Petitioner is advised that this is not a final agency decision.

This application became abandoned for failure to timely and properly respond to the February 20, 2008 final Office action, which set a three (3) month extendable period for reply. On May 14, 2008, applicant filed a petition for a two month extension of time under 37 CFR 1.136(a). On August 21, 2008, applicant filed an amendment after final. This application became abandoned on July 21, 2008. A Notice of Abandonment was mailed on October 9, 2008.

Petitioner asserts the application did not become abandoned because the final Office action contained an error in identifying a reference. Petitioner argues that the reply period should be reset to run from the date an interview took place, during which the proper reference was identified.

Petitioner is reminded that the final Office action set a three month extendable period for reply. Petitioner purchased a two month extension of time, but did not file a reply until August 21, 2008, which was after the date of abandonment. The February 20, 2008 final Office action was never vacated/withdrawn. Failure to timely reply resulted in the abandonment of the application. Even if an applicant believes an Office action is mailed in error or is lacking in some way, failure to respond by the deadline set in the Office action will result in the application's abandonment. The petition under 37 CFR 1.181 to withdraw the holding of abandonment is **dismissed**.

A grantable petition pursuant to 37 CFR 1.137(b) must be accompanied by:

(1) the required reply, unless previously filed.;

(2) the petition fee as set forth in 37 CFR 1.17(m);

(3) a statement that the **entire** delay in filing the required reply from the due date for the reply until the filing of a grantable petition pursuant to 37 CFR 1.137(b) was unintentional. The Director may require additional information where there is a question whether the delay was unintentional; and

(4) any terminal disclaimer (and fee set forth in 37 CFR 1.20(d)) required pursuant to 37 CFR 1.137(d).

The instant petition does not satisfy requirement (1) above.

Petitioner is reminded that after a final Office action, there are only five possible replies: (1) a Notice of Appeal, (2) the filing of a continuing application, (3) a 37 CFR 1.129(a) submission, if appropriate, (4) an amendment after final that makes the case ready for issuance or (5) an RCE. To be a proper reply, an amendment after final must place the case in *prima facie* condition for allowance. Examiner Crossland has indicated that the reply filed May 12, 2010 fails to place the application in *prima facie* condition for allowance. Please see the enclosed Advisory Action Before the Filing of an Appeal Brief for more details.

Further correspondence with respect to this matter should be delivered through one of the following mediums:

By mail: Mail Stop PETITIONS
Commissioner for Patents
Post Office Box 1450
Alexandria, VA 22313-1450

By hand: Customer Service Window
Mail Stop Petitions
Randolph Building
401 Dulany Street
Alexandria, VA 22314

By fax: (571) 273-8300
ATTN: Office of Petitions

By internet: EFS-Web
www.uspto.gov/ebc/efs_help.html
(for help using EFS-Web call the
Patent Electronic Business Center
at (866) 217-9197)

Telephone inquiries concerning this decision should be directed to the undersigned at (571) 272-3230.

Shirene Willis Brantley

Shirene Willis Brantley
Senior Petitions Attorney
Office of Petitions

Enclosure: Advisory Action Before the Filing of an Appeal Brief for Application No. 11/256,890

Advisory Action Before the Filing of an Appeal Brief	Application No. 11/256,890	Applicant(s) COLEMAN, NATE	
	Examiner DONNIE L. CROSLAND	Art Unit 2612	

--The MAILING DATE of this communication appears on the cover sheet with the correspondence address --

THE REPLY FILED 5-12-10 FAILS TO PLACE THIS APPLICATION IN CONDITION FOR ALLOWANCE.

1. ☐ The reply was filed after a final rejection, but prior to or on the same day as filing a Notice of Appeal. To avoid abandonment of this application, applicant must timely file one of the following replies: (1) an amendment, affidavit, or other evidence, which places the application in condition for allowance; (2) a Notice of Appeal (with appeal fee) in compliance with 37 CFR 41.31; or (3) a Request for Continued Examination (RCE) in compliance with 37 CFR 1.114. The reply must be filed within one of the following time periods:
   a) ☐ The period for reply expires _____months from the mailing date of the final rejection.
   b) ☐ The period for reply expires on: (1) the mailing date of this Advisory Action, or (2) the date set forth in the final rejection, whichever is later. In no event, however, will the statutory period for reply expire later than SIX MONTHS from the mailing date of the final rejection.
   Examiner Note: If box 1 is checked, check either box (a) or (b). ONLY CHECK BOX (b) WHEN THE FIRST REPLY WAS FILED WITHIN TWO MONTHS OF THE FINAL REJECTION. See MPEP 706.07(f).

Extensions of time may be obtained under 37 CFR 1.136(a). The date on which the petition under 37 CFR 1.136(a) and the appropriate extension fee have been filed is the date for purposes of determining the period of extension and the corresponding amount of the fee. The appropriate extension fee under 37 CFR 1.17(a) is calculated from: (1) the expiration date of the shortened statutory period for reply originally set in the final Office action; or (2) as set forth in (b) above, if checked. Any reply received by the Office later than three months after the mailing date of the final rejection, even if timely filed, may reduce any earned patent term adjustment. See 37 CFR 1.704(b).

NOTICE OF APPEAL

2. ☐ The Notice of Appeal was filed on _____. A brief in compliance with 37 CFR 41.37 must be filed within two months of the date of filing the Notice of Appeal (37 CFR 41.37(a)), or any extension thereof (37 CFR 41.37(e)), to avoid dismissal of the appeal. Since a Notice of Appeal has been filed, any reply must be filed within the time period set forth in 37 CFR 41.37(a).

AMENDMENTS

3. ☒ The proposed amendment(s) filed after a final rejection, but prior to the date of filing a brief, will not be entered because
   (a) ☒ They raise new issues that would require further consideration and/or search (see NOTE below);
   (b) ☒ They raise the issue of new matter (see NOTE below);
   (c) ☒ They are not deemed to place the application in better form for appeal by materially reducing or simplifying the issues for appeal; and/or
   (d) ☐ They present additional claims without canceling a corresponding number of finally rejected claims.
   NOTE: _____. (See 37 CFR 1.116 and 41.33(a)).
4. ☒ The amendments are not in compliance with 37 CFR 1.121. See attached Notice of Non-Compliant Amendment (PTOL-324).
5. ☒ Applicant's reply has overcome the following rejection(s): _____.
6. ☒ Newly proposed or amended claim(s) _____ would be allowable if submitted in a separate, timely filed amendment canceling the non-allowable claim(s).
7. ☒ For purposes of appeal, the proposed amendment(s): a) ☒ will not be entered, or b) ☐ will be entered and an explanation of how the new or amended claims would be rejected is provided below or appended.
   The status of the claim(s) is (or will be) as follows:
   Claim(s) allowed: *NONE*.
   Claim(s) objected to: *NONE*.
   Claim(s) rejected: *1-8 and 11-30*.
   Claim(s) withdrawn from consideration: *NONE*.

AFFIDAVIT OR OTHER EVIDENCE

8. ☐ The affidavit or other evidence filed after a final action, but before or on the date of filing a Notice of Appeal will not be entered because applicant failed to provide a showing of good and sufficient reasons why the affidavit or other evidence is necessary and was not earlier presented. See 37 CFR 1.116(e).
9. ☐ The affidavit or other evidence filed after the date of filing a Notice of Appeal, but prior to the date of filing a brief, will not be entered because the affidavit or other evidence failed to overcome all rejections under appeal and/or appellant fails to provide a showing a good and sufficient reasons why it is necessary and was not earlier presented. See 37 CFR 41.33(d)(1).
10. ☐ The affidavit or other evidence is entered. An explanation of the status of the claims after entry is below or attached.

REQUEST FOR RECONSIDERATION/OTHER

11. ☐ The request for reconsideration has been considered but does NOT place the application in condition for allowance because: _____.
12. ☐ Note the attached Information *Disclosure Statement*(s). (PTO/SB/08) Paper No(s). _____
13. ☒ Other: ADVISORY.

/DONNIE L. CROSLAND/
Primary Examiner, Art Unit 2612

ADVISORY

In claim 1, the added language "position or shape" and "where the communication system is not resonance-based" is new matter and there is no support in the original specification for this language.

The language also involves new issues that would also require further consideration and search.

In claim 4, the language "without a light splitter" is new matter as well as a new issue that would require further consideration and search.

In claims 6, 15, 17, 23, and 28, all of the underlined material involves new issues that would require further consideration and search.

In view of the above reasons, the amendment does not placed the application in condition for allowance and does not reduce or simplify the issues for appeal.

Any inquiry concerning this communication or earlier communications from the examiner should be directed to DONNIE L. CROSLAND whose telephone number is 571-272-2980. The examiner can normally be reached on Mon-Thur. 9:30a-6:00p.

If attempts to reach the examiner by telephone are unsuccessful, the examiner's supervisor, DANIEL J. WU can be reached on 571-272-2964. The fax phone number for the organization where this application or proceeding is assigned is 571-273-8300.

Information regarding the status of an application may be obtained from the Patent Application Information Retrieval (PAIR) system. Status information for published applications may be obtained from either Private PAIR or Public PAIR. Status information for unpublished applications is available through Private PAIR only. For more information about the PAIR system, see http://pair-direct.uspto.gov. Should you have questions on access to the Private PAIR system, contact the Electronic Business Center (EBC) at 866-217-9197 (toll-free). If you would like assistance from a USPTO Customer Service Representative or access to the automated information system, call 800-786-9199 (IN USA OR CANADA) or 571-272-1000.

/DONNIE L. CROSLAND/
Primary Examiner, Art Unit 2612

DLC
9-14-10

UNITED STATES PATENT AND TRADEMARK OFFICE

Commissioner for Patents
United States Patent and Trademark Office
P.O. Box 1450
Alexandria, VA 22313-1450
www.uspto.gov

AEXIUS, LLC
904 Silver Spur Rd. #310
Rolling Hills Estates CA 90274

MAILED
FEB 01 2011
OFFICE OF PETITIONS
ON PETITION

In re Application of :
Coleman :
Application No. 11/256,890 :
Filed: October 24, 2005 :
Attorney Docket No. US19387 :

This decision is mailed in response to the renewed petitions under 37 CFR 1.181 and 37 CFR 1.137(b), filed December 8, 2010.

The petition under 37 CFR 1.181 is **DISMISSED**.

The petition under 37 CFR 1.137(b) is **GRANTED**.

This application became abandoned for failure to timely and properly respond to the February 20, 2008 final Office action, which set a three (3) month extendable period for reply. On May 14, 2008, applicant filed a petition for a two month extension of time under 37 CFR 1.136(a). On August 21, 2008, applicant filed an amendment after final. This application became abandoned on July 21, 2008. A Notice of Abandonment was mailed on October 9, 2008.

Petitioner asserts the application did not become abandoned because the final Office action contained an error in identifying a reference. Petitioner argues that the reply period should be reset to run from the date an interview took place, during which the proper reference was identified.

Petitioner is reminded that the final Office action set a three month extendable period for reply. Petitioner purchased a two month extension of time, but did not file a reply until August 21, 2008, which was after the date of abandonment. The February 20, 2008 final Office action was never vacated/withdrawn. The Interview Summary, mailed May 23, 2008, was not an Office action that reset the period for response. As noted by petitioner, petitioner was made aware of the proper reference on May 21, 2008 during the telephonic interview with the examiner. Petitioner had until July 20, 2008 (almost two months were left in the extended period for reply) to file a reply. However, applicant did not file a reply until August 21, 2008.

Failure to timely reply resulted in the abandonment of the application. It is noted that the August 21, 2008 reply, even if it had been filed timely, was not proper. The May 12, 2010 reply filed with the May 12, 2010 petition was not proper. A proper reply to the final Office action was not filed until December 8, 2010.

The renewed petition under 37 CFR 1.181 to withdraw the holding of abandonment is **dismissed**.

Applicant has submitted a RCE and required $405.00 fee and amendment in reply to the February 20, 2008 final Office action, an acceptable statement of the unintentional nature of the delay in responding to the February 20, 2008 final Office action, and the $810.00 petition fee.

The petition under 37 CFR 1.137(b) is **GRANTED**.

Petitioner requests refund of the Rule 137(b) petition fee. 35 U.S.C. 41(a)(7) provides that a petition for the revival of an unintentionally abandoned application or for the unintentionally delayed payment of the issue fee must be accompanied by the petition fee set forth in 37 CFR 1.17(m), unless the petition is filed under 35 U.S.C. 133 or 151 (on the basis of unavoidable delay), in which case the fee is set forth in 37 CFR 1.17(l). Thus, unless the circumstances warrant the withdrawal of the holding of abandonment (i.e., it is determined that the application is not properly held abandoned), the payment of a petition fee to obtain the revival of an abandoned application is a statutory prerequisite to revival of the abandoned application, and cannot be waived. The request for refund of the petition fee is denied.

This application is being referred to Technology Center AU 2612 for processing of the RCE and for appropriate action by the Examiner in the normal course of business on the amendment submitted in accordance with 37 CFR 1.114.

Telephone inquiries concerning this decision should be directed to the undersigned at (571) 272-3230.

Shirene Willis Brantley

Shirene Willis Brantley
Senior Petitions Attorney
Office of Petitions

UNITED STATES PATENT AND TRADEMARK OFFICE

Commissioner for Patents
United States Patent and Trademark Office
P.O. Box 1450
Alexandria, VA 22313-1450
www.uspto.gov

Fujitsu Patent Center
Fujitsu Management Services of America, Inc.
2318 Mill Road, Suite 1010
Alexandria VA 22314

MAILED

OCT 15 2010

OFFICE OF PETITIONS

In re Application of :
Xiaoyu Mi et al. :
Application No. 11/256,959 : DECISION ON PETITION
Filed: October 25, 2005 :
Attorney Docket No. 03-95041 :

This is a decision on the petition under the unintentional provisions of 37 CFR 1.137(b), filed August 27, 2010, to revive the above-identified application.

The petition is **GRANTED**.

This application became abandoned for failure to timely pay the issue and publication fees on or before August 9, 2010, as required by the Notice of Allowance and Fee(s) Due, mailed May 7, 2010. Accordingly, the date of abandonment of this application is August 10, 2010. A Notice of Abandonment August 24, 2010.

The petition satisfies the requirements of 37 CFR 1.137(b) in that petitioner has supplied (1) the reply in the form of payment of the issue fee of $1,510 and the publication fee of $300, (2) the petition fee of $1,620, and (3) a proper statement of unintentional delay. Accordingly, the issue and publication fees are accepted as being unintentionally delayed.

Telephone inquiries concerning this decision should be directed to Kimberly Inabinet at (571) 272-4618.

This application is being referred to the Office of Data Management for further processing into a patent.

/Kimberly A. Inabinet/

Kimberly A. Inabinet
Petitions Examiner
Office of Petitions

SPE RESPONSE FOR CERTIFICATE OF CORRECTION

Paper No.: _____

DATE : 5/19/11

TO SPE OF : ART UNIT 2618

SUBJECT : Request for Certificate of Correction for Appl. No.: 11257042 Patent No.: 7565162

CofC mailroom date: 08/04/09

Please respond to this request for a certificate of correction within 7 days.

FOR IFW FILES:

Please review the requested changes/corrections as shown in the **COCIN** document(s) in the IFW application image. No new matter should be introduced, nor should the scope or meaning of the claims be changed.

Please complete the response (see below) and forward the completed response to scanning using document code **COCX**.

FOR PAPER FILES:

Please review the requested changes/corrections as shown in the attached certificate of correction. Please complete this form (see below) and forward it with the file to:

Certificates of Correction Branch (CofC)
Randolph Square – 9D10-A
Palm Location 7580
You can fax the Directors/SPE response to 571-273-3421

Lamonte Newsome

Certificates of Correction Branch
571-272-3421

Thank You For Your Assistance

The request for issuing the above-identified correction(s) is hereby:
Note your decision on the appropriate box.

XApproved	**All** changes apply.
☐ **Approved in Part**	Specify below which changes **do not** apply.
☐ **Denied**	State the reasons for denial below.

Comments: no new matter

/duc nguyen/ 2618
SPE Art Unit

PAGE 2/2 * RCVD AT 7/13/2011 10:35:47 AM [Eastern Daylight Time] * SVR:W-PTOFAX-001/21 * DNIS:2733421 * CSID:703 308 5403 * DURATION (mm-ss):01-25

UNITED STATES PATENT AND TRADEMARK OFFICE

Commissioner for Patents
United States Patent and Trademark Office
P.O. Box 1450
Alexandria, VA 22313-1450
www.uspto.gov

In re Application of
Donald R. Owen

Application No. 11257066

Filed: October 25,2005

Attorney Docket No. 040219.05

:DECISION ON PETITION TO MAKE SPECIAL
:UNDER 37 CFR 1.102(c)(1)

This is a decision on the electronic petition under 37 CFR 1.102 (c)(1), filed 09-JUN-2011 to make the above-identified application special based on applicant's age as set forth in MPEP § 708.02, Section IV.

The petition is **GRANTED**.

A grantable petition to make an application special under 37 CFR 1.102(c)(1), MPEP § 708.02, Section IV: Applicant's Age must include a statement by applicant or a registered practitioner having evidence that applicant is at least 65 years of age. No fee is required.

Accordingly, the above-identified application has been accorded "special" status and will be taken up for action by the examiner upon the completion of all pre-examination processing.

Telephone inquiries concerning this electronic decision should be directed to the Electronic Business Center at 866-217-9197.

All other inquiries concerning either the examination or status of the application should be directed to the Technology Center.

Doc code : PET.OP.AGE
Description : Petition to make special based on Age/Health

PTO/SB/130 (07-09)
Approved for use through 07/31/2012. OMB 0651- 0031
U.S. Patent and Trademark Office; U.S. DEPARTMENT OF COMMERCE
Under the Paperwork Reduction Act of 1995, no persons are required to respond to a collection of information unless it contains a valid OMB control number

PETITION TO MAKE SPECIAL BASED ON AGE FOR ADVANCEMENT OF EXAMINATION UNDER 37 CFR 1.102(c)(1)

Application Information

Application Number	11/257,066	Confirmation Number	9347	Filing Date	2005-10-25
Attorney Docket Number (optional)	040219.05	Art Unit	1657	Examiner	Saucier, Sandra E
First Named Inventor	Donald R. Owen				
Title of Invention	Apparatus and method for maintaining and/or restoring viability of organs				

Attention: Office of Petitions
An application may be made special for advancement of examination upon filing of a petition showing that the applicant is 65 years of age, or more. No fee is required with such a petition. See 37 CFR 1.102(c)(1) and MPEP 708.02 (IV).

APPLICANT HEREBY PETITIONS TO MAKE SPECIAL FOR ADVANCEMENT OF EXAMINATION IN THIS APPLICATION UNDER 37 CFR 1.102(c)(1) and MPEP 708.02 (IV) ON THE BASIS OF THE APPLICANT'S AGE.

A grantable petition requires one of the following items:
(1) Statement by one named inventor in the application that he/she is 65 years of age, or more; or
(2) Certification by a registered attorney/agent having evidence such as a birth certificate, passport, driver's license, etc. showing one named inventor in the application is 65 years of age, or more.

Name of Inventor who is 65 years of age, or older

Given Name	Middle Name	Family Name	Suffix
Donald	R.	Owen	

A signature of the applicant or representative is required in accordance with 37 CFR 1.33 and 10.18.
Please see 37 CFR 1.4(d) for the format of the signature.

Select (1) or (2) :

○ (1) I am an inventor in this application and I am 65 years of age, or more.

● (2) I am an attorney or agent registered to practice before the Patent and Trademark Office, and I certify that I am in possession of evidence, and will retain such in the application file record, showing that the inventor listed above is 65 years of age, or more.

Signature	/Benjamin S. Prebyl/	Date (YYYY-MM-DD)	2011-06-09
Name	Benjamin S. Prebyl	Registration Number	60256

PTO/SB/130 (07-09)
Approved for use through 07/31/2012. OMB 0651- 0031
U.S. Patent and Trademark Office; U.S. DEPARTMENT OF COMMERCE
Under the Paperwork Reduction Act of 1995, no persons are required to respond to a collection of information unless it contains a valid OMB control number

Privacy Act Statement

The Privacy Act of 1974 (P.L. 93-579) requires that you be given certain information in connection with your submission of the attached form related to a patent application or patent. Accordingly, pursuant to the requirements of the Act, please be advised that: (1) the general authority for the collection of this information is 35 U.S.C. 2(b)(2); (2) furnishing of the information solicited is voluntary; and (3) the principal purpose for which the information is used by the U.S. Patent and Trademark Office is to process and/or examine your submission related to a patent application or patent. If you do not furnish the requested information, the U.S. Patent and Trademark Office may not be able to process and/or examine your submission, which may result in termination of proceedings or abandonment of the application or expiration of the patent.

The information provided by you in this form will be subject to the following routine uses:

1. The information on this form will be treated confidentially to the extent allowed under the Freedom of Information Act (5 U.S.C. 552) and the Privacy Act (5 U.S.C. 552a). Records from this system of records may be disclosed to the Department of Justice to determine whether the Fr eedom of Information Act requires disclosure of these records.

2. A record from this system of records may be disclosed, as a routine use, in the course of presenting evidence to a court, magistrate, or administrative tribunal, including disclosures to opposing counsel in the course of settlement negotiations.

3. A record in this system of records may be disclosed, as a routine use, to a Member of Congress submitting a request involving an individual, to whom the record pertains, when the individual has requested assistance from the Member with respect to the subject matter of the record.

4. A record in this system of records may be disclosed, as a routine use, to a contractor of the Agency having need for the information in order to perform a contract. Recipients of information shall be required to comply with the requirements of the Privacy Act of 1974, as amended, pursuant to 5 U.S.C. 552a(m).

5. A record related to an International Application filed under the Patent Cooperation Treaty in this system of records may be disclosed, as a routine use, to the International Bureau of the World Intellectual Property Organization, pursuant to the Patent Cooperation Treaty.

6. A record in this system of records may be disclosed, as a routine use, to another federal agency for purposes of National Security review (35 U.S.C. 181) and for review pursuant to the Atomic Energy Act (42 U.S.C. 218(c)).

7. A record from this system of records may be disclosed, as a routine use, to the Administrator, General Services, or his/her designee, during an inspection of records conducted by GSA as part of that agency's responsibility to recommend improvements in records management practices and programs, under authority of 44 U.S.C. 2904 and 2906. Such disclosure shall be made in accordance with the GSA regulations governing inspection of records for this purpose, and any other relevant (i.e., GSA or Commerce) directive. Such disclosure shall not be used to make determinations about indivi duals.

8. A record from this system of records may be disclosed, as a routine use, to the public after either publication of the application pursuant to 35 U.S.C. 122(b) or issuance of a patent pursuant to 35 U.S.C. 151. Further, a record may be disclosed, subject to the limitations of 37 CFR 1.14, as a routine use, to the public if the record was filed in an application which became abandoned or in which the proceedings were terminated and which application is referenced by either a published application, an application open to public inspections or an issued patent.

9. A record from this system of records may be disclosed, as a routine use, to a Federal, State, or local law enforcement agency, if the USPTO becomes aware of a violation or potential violation of law or regulation.

UNITED STATES PATENT AND TRADEMARK OFFICE

Commissioner for Patents
United States Patent and Trademark Office
P.O. Box 1450
Alexandria, VA 22313-1450
www.uspto.gov

Patent No. : **7699880**
Ser. No. : **11/257177**
Inventor(s) : **ORBAY, JORGE L.**
Issued : **04/20/2010**
Title : **BONE FIXATION SYSTEM AND BONE SCREWS HAVING ANTI-BACK OUT FEATURE**
Docket No. : **HAN-052**

Re: Request for Certificate of Correction

Consideration has been given your request for the issuance of a certificate of correction for the above-identified patent under the provisions of Rule(s) 1.322 and/or 1.323.

In regards to the alleged error(s) in the country of citizenship for the third inventor, we don't print the inventor's country of citizenship on the patent. The (US) is the country of residence, not the country of citizenship. We print a parenthetical country code for each inventor's residences. The patent is printed in accordance with the Oath of Declaration.

In view of the foregoing, your request, in this matter, is hereby denied.

Omega Lewis
For Mary Diggs
Decisions & Certificates
Of Correction Branch
(703)756-1575 or (703) 756-1814

Gordon & Jacobson, P.C.
60 Long Ridge Road, Suite 407
Stamford, CT 06902

OL

UNITED STATES PATENT AND TRADEMARK OFFICE

Commissioner for Patents
United States Patent and Trademark Office
P.O. Box 1450
Alexandria, VA 22313-1450
www.uspto.gov

MAILED
JUN 08 2011
OFFICE OF PETITIONS

TERRELL P. LEWIS
154 N. RIDGE DRIVE
FALLFBROOK CA 92028

In re Application of	:	
BENNETT	:	
Application No. 11/257,224	:	DECISION ON PETITION
Filed: October 24, 2005	:	
Docket No. TB001	:	

This is a decision on the petition under the unintentional provisions of 37 CFR 1.137(b), filed April 25, 2011, to revive the above-identified application.

The petition is **GRANTED**.

The application became abandoned for failure to reply in a timely manner to the non-final Office action mailed, October 7, 2008, which set a shortened statutory period for reply of three (3) months. No extensions of time under the provisions of 37 CFR 1.136(a) were obtained. Accordingly, the application became abandoned on January 8, 2009.

The petition satisfies the requirements of 37 CFR 1.137(b) in that petitioner has supplied (1) the reply in the form of an amendment, (2) the petition fee of $810; and (3) and the required statement of unintentional delay.

It is not apparent whether the person signing the statement of unintentional delay was in a position to have firsthand or direct knowledge of the facts and circumstances of the delay at issue. Nevertheless, such statement is being treated as having been made as the result of a reasonable inquiry into the facts and circumstances of such delay. See 37 CFR 10.18(b) and Changes to Patent Practice and Procedure; Final Rule Notice, 62 Fed. Reg. 53131, 53178 (October 10, 1997), 1203 Off. Gaz. Pat. Office 63, 103 (October 21, 1997). In the event that such an inquiry has not been made, petitioner must make such an inquiry. If such inquiry results in the discovery that it is not correct that the entire delay in filing the required reply from the due

date for the reply until the filing of a grantable petition pursuant to 37 CFR 1.137(b) was unintentional, petitioner must notify the Office.

There is no indication that the person signing the petition was ever given a power of attorney to prosecute the application. If the person signing the petition desires to receive future correspondence regarding this application, the appropriate power of attorney document must be submitted. While a courtesy copy of this decision is being mailed to the person signing the petition, all future correspondence will be directed to the address currently of record until appropriate instructions are received.

Telephone inquiries concerning this decision should be directed to the undersigned at (571) 272-6735.

This application is being referred to Technology Center AU 3767 for appropriate action by the Examiner in the normal course of business.

/Diane C. Goodwyn/
Diane C. Goodwyn
Petitions Examiner
Office of Petitions

cc: RYAN S. DEAN
FISH & ASSOCIATES, PC
2603 MAIN STREET, SUITE 1000
IRVINE, CA 92614

UNITED STATES PATENT AND TRADEMARK OFFICE

Commissioner for Patents
United States Patent and Trademark Office
P.O. Box 1450
Alexandria, VA 22313-1450
www.uspto.gov

FISH & RICHARDSON PC
PO BOX 1022
MINNEAPOLIS MN 55440-1022

MAILED
JUL 19 2011
OFFICE OF PETITIONS

In re Patent No. 7,933,900	: DECISION ON
Reddy, et al.	: REQUEST FOR RECONSIDERATION
Application No. 11/257,282	: of PATENT TERM ADJUSTMENT
Issue Date: April 26, 2011	:
Filed: October 23, 2005	:
Attorney Docket No. 16113-1120001	:

This is a decision on the "APPLICATION FOR PATENT TERM ADJUSTMENT UNDER 37 C.F.R. §1.705(d)", filed June 27, 2011, requesting that the patent term adjustment indicated on the above-identified patent be corrected from zero (0) days to one hundred forty-six (146) days.

The petition to correct the patent term adjustment indicated on the above-identified patent is **DISMISSED.**

On March 22, 2011, the instant application matured into U.S. Patent No. 7,933,900 with a patent term adjustment of zero (0) days. The Office determined a patent term adjustment of 0 days based upon 146 days of Office delay pursuant to 37 CFR 1.703(a)(1), 29 days of Office delay pursuant to 37 CFR 1.703(a)(2), and 119 days of Office delay pursuant to 37 CFR 1.703(a)(3), reduced by 313 days of Applicant delay for various instances of delay under 37 CFR 1.704(b), 37 CFR 1.704(c)(8), and 37 CFR 1.704(c)(10).

Patentees argue that even though they filed an RCE (on July 8, 2008 and again on April 13, 2009 and March 30, 2010), they should be awarded 37 CFR 1.703(b) "over three year" delay from the time the Office mailed a Notice of Allowance on November 26, 2010 until the issue date of the patent. In other words, Patentee argue that no continued examination took place during this time period, and the Office should be accorded 152 days of delay pursuant to 37 CFR 1.703(b). Patentee's argument has been considered, but is not persuasive.

RELEVANT STATUTE AND REGULATIONS

The statutory basis for calculation of "B delay" is 35 U.S.C. 154(b)(1)(B) GUARANTEE OF NO MORE THAN 3-YEAR APPLICATION PENDENCY, which provides that:

Subject to the limitations under paragraph (2), if the issue of an original patent is delayed due to the failure of the United States Patent and Trademark Office to issue a patent within 3 years after the actual filing date of the application in the United States, not including —

> (i) any time consumed by continued examination of the application requested by the applicant under section 132(b);
>
> (ii) any time consumed by a proceeding under section 135(a), any time consumed by the imposition of an order under section 181, or any time consumed by appellate review by the Board of Patent Appeals and Interferences or by a Federal court; or
>
> (iii) any delay in the processing of the application by the United States Patent and Trademark Office requested by the applicant except as permitted by paragraph (3)(C), the term of the patent shall be extended 1 day for each day after the end of that 3-year period until the patent is issued.

The implementing regulation, 37 CFR 1.702(b) provides that:

Subject to the provisions of 35 U.S.C. 154(b) and this subpart, the term of an original patent shall be adjusted if the issuance of the patent was delayed due to the failure of the Office to issue a patent within three years after the date on which the application was filed under 35 U.S.C. 111(a) or the national stage commenced under 35 U.S.C. 371(b) or (f) in an international application, but not including:

> (1) Any time consumed by continued examination of the application under 35 U.S.C. 132(b);
> (2) Any time consumed by an interference proceeding under 35 U.S.C. 135(a);
> (3) Any time consumed by the imposition of a secrecy order under 35 U.S.C. 181;
> (4) Any time consumed by review by the Board of Patent Appeals and Interferences or a Federal court; or
> (5) Any delay in the processing of the application by the Office that was requested by the applicant.

OPINION

Patentee's arguments have been considered, but not found persuasive. The Office calculated the period of "B delay" pursuant to 35 U.S.C. 154(b)(1)(B)(i) and 37 CFR 1.702(b)(1) as 0 days based on the application having been filed under 35 U.S.C. 111(a) on October 23, 2005 and a request for continued examination under 132(b) having been filed on July 8, 2008. In other

words, the 155 day period beginning on the date of mailing of the notice of allowance on November 26, 2010 to the date of issuance of the patent was considered time consumed by continued examination of an application under 35 U.S.C. 132(b) and was not included in the "B delay."

The Office's calculation of "B delay" is correct. The "B delay" is an adjustment entered if the issuance of the patent was delayed due to the failure of the Office to issue a patent within three years after the date on which the application was filed. However, the adjustment does not include, among other things, any time consumed by continued examination of the application at the request of the applicant under 35 U.S.C. 132(b)[1]. So, with respect to calculating the "B delay" where applicant has filed a request for continued examination, the period of adjustment is the number of days, if any, in the period beginning on the day after the date that is three years after the date on which the application was filed under 35 U.S.C. 111(a) or the national stage commenced under 35 U.S.C. 371(b) or (f) in an international application and ending on the date a patent was issued, but not including the number of days in the period beginning on the date on which a request for continued examination of the application under 35 U.S.C. 132(b) was filed and ending on the date the patent was issued.

Further, counting the period of time excluded from the "B delay" for the filing of a request for continued examination under 35 U.S.C. 132(b), from the date on which the request for continued examination is filed to the date the patent is issued is proper. Patentee does not dispute that time consumed by continued examination of an application under 35 U.S.C. 132(b) is properly excluded and that the calculation of the excluded period begins on the date of filing of the request for continued examination. At issue is what further processing or examination beyond the date of filing of the request for continued examination is not any time consumed by continued examination of the application under 35 U.S.C. 132(b). The USPTO indicated in September of 2000 in the final rule to implement the patent term adjustment provisions of the AIPA that once a request for continued examination under 35 U.S.C. 132(b) and 37 CFR 1.114 is filed in an application, any further processing or examination of the application, including granting of a patent, is by virtue of the continued examination given to the application under 35 U.S.C. 132(b) and CFR 1.114. See Changes to Implement Patent Term Adjustment under Twenty-Year Patent Term, 65 Fed. Reg. 56366, 56376 (Sept. 18, 2000) (response to comment 8). Thus, the excluded period begins with the filing of the request for continued examination and ends with the issuance of the patent.

---

[1] Pursuant to 35 U.S.C. 132(b), 37 CFR 1.114 provides for continued examination of an application, as follows:

(a) If prosecution in an application is closed, an applicant may request continued examination of the application by filing a submission and the fee set forth in § 1.17(e) prior to the earliest of:

(1) Payment of the issue fee, unless a petition under § 1.313 is granted;

(2) Abandonment of the application; or

(3) The filing of a notice of appeal to the U.S. Court of Appeals for the Federal Circuit under 35 U.S.C. 141, or the commencement of a civil action under 35 U.S.C. 145 or 146, unless the appeal or civil action is terminated.

(b) Prosecution in an application is closed as used in this section means that the application is under appeal, or that the last Office action is a final action (§ 1.113), a notice of allowance (§ 1.311), or an action that otherwise closes prosecution in the application.

Patentee's argument that the period of time after the issuance of a notice of allowance on a request for continued examination is not "any time consumed by continued examination requested by the applicant under section 132(b)" within the meaning of 35 U.S.C. 154(b)(1)(B)(i) is not availing. This limitation is not supported by the statutory language. Garcia v. United States, 469 U.S. 70, 75 (1984) ("only the most extraordinary showing of contrary intentions from [legislative history] would justify a limitation on the 'plain meaning' of the statutory language"). BP Am. Prod. Co. v. Burton, 549 U.S. 84, 91 (2006) ("Unless otherwise defined, statutory terms are generally interpreted in accordance with their ordinary meaning"). The statute provides for a guarantee of no more than 3-year application pendency, by providing for an adjustment in the patent term:

First, "Subject to the limitations of paragraph (2)," means that the limitations of paragraph 2 apply to this paragraph's adjustment of patent term. That is, the day-to-day extension of patent term for pendency beyond the 3 year period is restricted as follows: 1) "B delay" cannot accrue for days of "A delay" that overlap, 2) the patent term cannot be extended beyond disclaimed term, and 3) the period of adjustment, including accrued "B delay," will be reduced for applicant delay.

Second, "if the issue of an original patent is delayed due to the failure of the United States Patent and Trademark Office to issue a patent within 3 years after the actual filing date of the application in the United States," meaning that the condition must first occur that the issuance of an original patent (35 U.S.C. 153), not merely the issuance of a notice of allowance, is delayed due to the Office's failure to issue a patent (sign and record a patent grant in the name of the United States), not merely mail a notice of allowance, within 3 years after the actual filing date of the application in the United States. This provision gives the Office a three-year period to issue a patent (sign and record a patent grant in the name of the United States) after the application filing date before an adjustment will accrue for "B delay."

Third, "not including- (i) any time consumed by continued examination of the application requested by the applicant under section 132(b); (ii) any time consumed by a proceeding under section 135(a), any time consumed by the imposition of an order under section 181, or any time consumed by appellate review by the Board of Patent Appeals and Interferences or by a Federal court; or (iii) any delay in the processing of the application by the United States Patent and Trademark Office requested by the applicant except as permitted by paragraph (3)(C), meaning that the three-year period does not include "any time consumed by" or "any delay in processing," as specified in clauses (i)-(iii). This language correlates to 35 U.S.C. 154(b)(1)(A) which likewise provides the basis for determining the period given the Office to take the specified actions before an adjustment will accrue for "A delay" (e.g., extended for 1 day after the day after the period specified in clauses (i)-(iv)).

Furthermore, these clauses are interpreted using their ordinary meanings. Nonetheless, the context of the legislation should be considered. As stated in Wyeth v. Dudas, (580 F. Supp. 2d 138), because the clock for calculating the 20-year patent term begins to run on the filing date, and not on the day the patent is actually granted, some of the effective term of a patent is consumed by the time it takes to prosecute the application. To mitigate this effect, the statute, *inter alia*, grants adjustments of patent term whenever the patent prosecution takes more than

three years, regardless of the reason. The time consumed by prosecution of the application includes every day the application is pending before the Office from the actual filing date of the application in the United States until the date of issuance of the patent. The time it takes to prosecute the application ends not with the mailing of the notice of allowance, but with the issuance of the patent.

Thus, not including "any time consumed by" means not including any days used to prosecute the application as specified in clauses (i)-(ii)2. Clause (i) specifies "any time consumed by continued examination of the application requested by the applicant under section 132(b)." Clause (ii) specifies "any time consumed by a proceeding under section 135(a), any time consumed by the imposition of an order under section 181, or any time consumed by appellate review by the Board of Patent Appeals and Interferences or by a Federal court." "Time" in the context of this legislation throughout refers to days. "Consumed by" means used by or used in the course of. *Websters Collegiate Dictionary*, (11th ed.). The "any" signifies that the days consumed by are "any" of the days in the pendency of the application, and not just days that occur after the application has been pending for 3 years. As such, "any time consumed by" refers to any days used in the course of 1) continued examination of the application under section 132(b)(the filing of a request for continued examination), 2) interference proceedings, 3) secrecy orders, and 4) appellate review. Thus, that 3-year period given to the Office to issue a patent before an adjustment will accrue for "B delay" does not include any days used in the course of or any time consumed by clauses (i)-(ii), including any time consumed by the filing of a request for continued examination.

Fourth, "the term of the patent shall be extended 1 day for each day after the end of that 3-year period until the patent is issued" meaning that the consequence of this failure is that after "the end of that 3-year period" an additional 1 day of patent term will accrue for each day that the application is pending until the day the patent is issued.

The "time consumed by" or used in the course of the continued examination of the application requested by the applicant under section 132(b) does not end until issuance of the patent. 35 U.S.C. 132(b) was enacted under the same title, the "American Inventors Protection Act of 1999," as 35 U.S.C. 154(b). Section 4403 of the AIPA amended 35 U.S.C. § 132 to provide, at the request of the applicant, for continued examination of an application for a fee (request for continued examination or RCE practice), without requiring the applicant to file a continuing application under 37 CFR 1.53(b) or a continued prosecution application (CPA) under 37 CFR 1.53(d). Thus, clause (i) is different from clause (ii) in that clause (i) refers to an examination process whereas clause (ii) refers to time consumed by proceedings (interferences, secrecy orders and appeals) in an application.

---

[2] Clause (iii) provides for not including (iii) any delay in the processing of the application by the United States Patent and Trademark Office requested by the applicant except as permitted by paragraph (3)(C), the term of the patent shall be extended 1 day for each day after the end of that 3-year period until the patent is issued. It is noted that paragraph (3)(C) allows with an adequate showing by applicant for reinstatement of no more than 3 months of the patent term reduced for applicant delay in taking in excess of three months to respond.

By nature, the time used in the course of the examination process continues to issuance of the patent. The examination process involves examining the application to ascertain whether it appears that the applicant is entitled to a patent under the law. See 35 U.S.C. 131 ("[t]he Director shall cause an examination to be made of the application and the alleged new invention; and if on such examination it appears that the applicant is entitled to a patent under the law, the Director shall issue a patent therefor"). If on examination it appears that the applicant is entitled to a patent, the USPTO issues a notice of allowance. See 35 U.S.C. 151 ("[i]f it appears that applicant is entitled to a patent under the law, a written notice of allowance of the application shall be given or mailed to the applicant"). If on examination it appears that the applicant is not entitled to a patent, the USPTO issues a notice (an Office action) stating the applicable rejection, objection, or other requirement, with the reasons therefor. See 35 U.S.C. 132 ("[w]henever, on examination, any claim for a patent is rejected, or any objection or requirement made, the Director shall notify the applicant thereof, stating the reasons for such rejection, or objection or requirement, together with such information and references as may be useful in judging of the propriety of continuing the prosecution of his application"). Neither the issuance of a notice of allowance nor the insurance of an Office action terminates the examination process. If after the issuance of an Office action under 35 U.S.C. 132 it subsequently appears that the applicant is entitled to a patent (e.g., in response to an argument or amendment by the applicant), the USPTO will issue a notice of allowance. Conversely, if after the issuance of a notice of allowance under 35 U.S.C. 151 it subsequently appears that the applicant is not entitled to a patent (e.g., in response to information provided by the applicant or uncovered by the USPTO), the USPTO will withdraw the application from issuance and issue an Office action under 35 U.S.C. 132 stating the applicable rejection, objection, or other requirement, with the reasons therefor.

As held in Blacklight Power, the USPTO's responsibility to issue a patent containing only patentable claims does not end with the issuance of a notice of allowance under 35 U.S.C. 151. See BlackLight Power, Inc. v. Rogan, 295 F.3d 1269, 1273 (Fed. Cir. 2002). Rather, if there is any substantial, reasonable ground within the knowledge or cognizance of the Director as to why an application should not issue, it is the USPTO's duty to refuse to issue the patent even if a notice of allowance has previously been issued for the application. See In re Drawbaugh, 9 App. D.C. 219, 240 (D.C. Cir 1896).

Moreover, the applicant continues to be engaged in the examination process after the mailing of the notice of allowance. 37 CFR 1.56 makes clear that the applicant has a duty to disclose information material to patentability as long as the application is pending before the USPTO (i.e., until a patent is granted or the application is abandoned). See 37 CFR 1.56(a) ("[t]he duty to disclose information exists with respect to each pending claim until the claim is cancelled or withdrawn from consideration, or the application becomes abandoned"). 37 CFR 1.97 and 1.98 provide for the consideration of information submitted by the applicant after a notice of allowance has been mailed. See 37 CFR 1.97(d). In addition, 37 CFR 1.312 provides for the amendment of an application after a notice of allowance has been mailed. In fact, the request for examination procedures3 permit the filing of a request for continued examination under 37 CFR 1.114 even after the issuance of a notice of allowance under 35 U.S.C. 151. See 37 CFR 1.114(a)(1).

---

[3] Thus, on occasion, even where a request for continued examination has already been filed and a notice of allowance issued pursuant to that request, applicant may file a further request for continued examination.

As the examination process does not terminate with the mailing of the notice of allowance, the time consumed by continued examination requested by the applicant under section 132(b) does not terminate with the mailing of the notice of allowance. All the time the application is pending from the date of filing of the request for continued examination to the mailing of the notice of allowance through issuance of the patent is a consequence of the filing of the request for continued examination. Further action by the Office is pursuant to that request. Applicant has gotten further prosecution of the application without having to file a continuing application under 37 CFR 1.53(b).

All of the continued examination pursuant to the filing of the request by the applicant is properly excluded from the delay attributed to the Office. 35 U.S.C. 154(b)(1)(B)'s guarantee of a total application pendency of no more than three years provides for adjustment of the patent term for delay due to the Office's failure to issue the patent within three years, but does not include "any time consumed by continued examination requested by the applicant under 35 U.S.C. 132(b)." It is not necessary to mitigate the effect on the 20-year term to the extent that applicant has requested that the Office continue to examine the application via a request for continued examination, in lieu of, the filing of a continuing application under 37 CFR 1.53(b).

In this instance, a request for continued examination was filed on July 8, 2008, and the patent issued by virtue of that request on April 26, 2011. Pursuant to 35 U.S.C. 154(b)(1)(B)(i), the period beginning on July 8, 2008 and ending on April 26, 2011 is not included in calculating Office delay.

In addition, Patentees also point out that they should have been assessed seven (7) days of Applicant delay pursuant to 37 CFR 1.704(c)(8) for filing a supplemental IDS on April 20, 2009, not 21 days as currently accorded. A review of the record reveals that Applicants are correct. However, as this only brings the total number of days of Applicant delay to 299 days, because the number of days of PTO delay is 294 days, the net number of days remains at zero (0) days.

Telephone inquiries specific to this matter should be directed to the undersigned at (571) 272-3207.

Cliff Congo
Petitions Attorney
Office of Petitions

UNITED STATES PATENT AND TRADEMARK OFFICE

Commissioner for Patents
United States Patent and Trademark Office
P.O. Box 1450
Alexandria, VA 22313-1450
www.uspto.gov

FISH & RICHARDSON PC
PO BOX 1022
MINNEAPOLIS MN 55440-1022

MAILED
DEC 27 2011
OFFICE OF PETITIONS

In re Patent No. 7,933,900	: DECISION ON
Reddy, et al.	: REQUEST FOR RECONSIDERATION
Application No. 11/257,282	: of PATENT TERM ADJUSTMENT
Issue Date: April 26, 2011	:
Filed: October 23, 2005	:
Attorney Docket No. 16113-1120001	:

This is a decision on the "RESPONSE TO DECISION ON REQUEST FOR RECONSIDERATION OF PATENT TERM ADJUSTMENT", filed September 19, 2011, requesting that the patent term adjustment indicated on the above-identified patent be corrected from zero (0) days to one hundred forty-six (146) days.

The petition to correct the patent term adjustment indicated on the above-identified patent is **DENIED**.

On March 22, 2011, the instant application matured into U.S. Patent No. 7,933,900 with a patent term adjustment of zero (0) days. The Office determined a patent term adjustment of 0 days based upon 146 days of Office delay pursuant to 37 CFR 1.703(a)(1), 29 days of Office delay pursuant to 37 CFR 1.703(a)(2), and 119 days of Office delay pursuant to 37 CFR 1.703(a)(3), reduced by 313 days of Applicant delay for various instances of delay under 37 CFR 1.704(b), 37 CFR 1.704(c)(8), and 37 CFR 1.704(c)(10).

Patentees argue that even though they filed an RCE (on July 8, 2008 and again on April 13, 2009 and March 30, 2010), they should be awarded 37 CFR 1.703(b) "over three year" delay from the time the Office mailed a Notice of Allowance on November 26, 2010 until the issue date of the patent. In other words, Patentee argue that no continued examination took place during this time period, and the Office should be accorded 152 days of delay pursuant to 37 CFR 1.703(b). Patentee's argument has been considered, but is not persuasive.

RELEVANT STATUTE AND REGULATIONS

The statutory basis for calculation of "B delay" is 35 U.S.C. 154(b)(1)(B) GUARANTEE OF NO MORE THAN 3-YEAR APPLICATION PENDENCY, which provides that:

Subject to the limitations under paragraph (2), if the issue of an original patent is delayed due to the failure of the United States Patent and Trademark Office to issue a patent within 3 years after the actual filing date of the application in the United States, not including —

(i) any time consumed by continued examination of the application requested by the applicant under section 132(b);

(ii) any time consumed by a proceeding under section 135(a), any time consumed by the imposition of an order under section 181, or any time consumed by appellate review by the Board of Patent Appeals and Interferences or by a Federal court; or

(iii) any delay in the processing of the application by the United States Patent and Trademark Office requested by the applicant except as permitted by paragraph (3)(C), the term of the patent shall be extended 1 day for each day after the end of that 3-year period until the patent is issued.

The implementing regulation, 37 CFR 1.702(b) provides that:

Subject to the provisions of 35 U.S.C. 154(b) and this subpart, the term of an original patent shall be adjusted if the issuance of the patent was delayed due to the failure of the Office to issue a patent within three years after the date on which the application was filed under 35 U.S.C. 111(a) or the national stage commenced under 35 U.S.C. 371(b) or (f) in an international application, but not including:

(1) Any time consumed by continued examination of the application under 35 U.S.C. 132(b);
(2) Any time consumed by an interference proceeding under 35 U.S.C. 135(a);
(3) Any time consumed by the imposition of a secrecy order under 35 U.S.C. 181;
(4) Any time consumed by review by the Board of Patent Appeals and Interferences or a Federal court; or
(5) Any delay in the processing of the application by the Office that was requested by the applicant.

OPINION

Patentee's arguments have been considered, but not found persuasive. The Office calculated the period of "B delay" pursuant to 35 U.S.C. 154(b)(1)(B)(i) and 37 CFR 1.702(b)(1) as 0 days based on the application having been filed under 35 U.S.C. 111(a) on October 23, 2005 and a

request for continued examination under 132(b) having been filed on July 8, 2008. In other words, the 155 day period beginning on the date of mailing of the notice of allowance on November 26, 2010 to the date of issuance of the patent was considered time consumed by continued examination of an application under 35 U.S.C. 132(b) and was not included in the "B delay."

The Office's calculation of "B delay" is correct. The "B delay" is an adjustment entered if the issuance of the patent was delayed due to the failure of the Office to issue a patent within three years after the date on which the application was filed. However, the adjustment does not include, among other things, any time consumed by continued examination of the application at the request of the applicant under 35 U.S.C. 132(b)[1]. So, with respect to calculating the "B delay" where applicant has filed a request for continued examination, the period of adjustment is the number of days, if any, in the period beginning on the day after the date that is three years after the date on which the application was filed under 35 U.S.C. 111(a) or the national stage commenced under 35 U.S.C. 371(b) or (f) in an international application and ending on the date a patent was issued, but not including the number of days in the period beginning on the date on which a request for continued examination of the application under 35 U.S.C. 132(b) was filed and ending on the date the patent was issued.

Further, counting the period of time excluded from the "B delay" for the filing of a request for continued examination under 35 U.S.C. 132(b), from the date on which the request for continued examination is filed to the date the patent is issued is proper. Patentee does not dispute that time consumed by continued examination of an application under 35 U.S.C. 132(b) is properly excluded and that the calculation of the excluded period begins on the date of filing of the request for continued examination. At issue is what further processing or examination beyond the date of filing of the request for continued examination is not any time consumed by continued examination of the application under 35 U.S.C. 132(b). The USPTO indicated in September of 2000 in the final rule to implement the patent term adjustment provisions of the AIPA that once a request for continued examination under 35 U.S.C. 132(b) and 37 CFR 1.114 is filed in an application, any further processing or examination of the application, including granting of a patent, is by virtue of the continued examination given to the application under 35 U.S.C. 132(b) and CFR 1.114. See Changes to Implement Patent Term Adjustment under Twenty-Year Patent Term, 65 Fed. Reg. 56366, 56376 (Sept. 18, 2000) (response to comment 8).

---

[1] Pursuant to 35 U.S.C. 132(b), 37 CFR 1.114 provides for continued examination of an application, as follows:

(a) If prosecution in an application is closed, an applicant may request continued examination of the application by filing a submission and the fee set forth in § 1.17(e) prior to the earliest of:

(1) Payment of the issue fee, unless a petition under § 1.313 is granted;

(2) Abandonment of the application; or

(3) The filing of a notice of appeal to the U.S. Court of Appeals for the Federal Circuit under 35 U.S.C. 141, or the commencement of a civil action under 35 U.S.C. 145 or 146, unless the appeal or civil action is terminated.

(b) Prosecution in an application is closed as used in this section means that the application is under appeal, or that the last Office action is a final action (§ 1.113), a notice of allowance (§ 1.311), or an action that otherwise closes prosecution in the application.

Thus, the excluded period begins with the filing of the request for continued examination and ends with the issuance of the patent.

Patentee's argument that the period of time after the issuance of a notice of allowance on a request for continued examination is not "any time consumed by continued examination requested by the applicant under section 132(b)" within the meaning of 35 U.S.C. 154(b)(1)(B)(i) is not availing. This limitation is not supported by the statutory language. Garcia v. United States, 469 U.S. 70, 75 (1984) ("only the most extraordinary showing of contrary intentions from [legislative history] would justify a limitation on the 'plain meaning' of the statutory language"). BP Am. Prod. Co. v. Burton, 549 U.S. 84, 91 (2006) ("Unless otherwise defined, statutory terms are generally interpreted in accordance with their ordinary meaning"). The statute provides for a guarantee of no more than 3-year application pendency, by providing for an adjustment in the patent term:

First, "Subject to the limitations of paragraph (2)," means that the limitations of paragraph 2 apply to this paragraph's adjustment of patent term. That is, the day-to-day extension of patent term for pendency beyond the 3 year period is restricted as follows: 1) "B delay" cannot accrue for days of "A delay" that overlap, 2) the patent term cannot be extended beyond disclaimed term, and 3) the period of adjustment, including accrued "B delay," will be reduced for applicant delay.

Second, "if the issue of an original patent is delayed due to the failure of the United States Patent and Trademark Office to issue a patent within 3 years after the actual filing date of the application in the United States," meaning that the condition must first occur that the issuance of an original patent (35 U.S.C. 153), not merely the issuance of a notice of allowance, is delayed due to the Office's failure to issue a patent (sign and record a patent grant in the name of the United States), not merely mail a notice of allowance, within 3 years after the actual filing date of the application in the United States. This provision gives the Office a three-year period to issue a patent (sign and record a patent grant in the name of the United States) after the application filing date before an adjustment will accrue for "B delay."

Third, "not including- (i) any time consumed by continued examination of the application requested by the applicant under section 132(b); (ii) any time consumed by a proceeding under section 135(a), any time consumed by the imposition of an order under section 181, or any time consumed by appellate review by the Board of Patent Appeals and Interferences or by a Federal court; or (iii) any delay in the processing of the application by the United States Patent and Trademark Office requested by the applicant except as permitted by paragraph (3)(C), meaning that the three-year period does not include "any time consumed by" or "any delay in processing," as specified in clauses (i)-(iii). This language correlates to 35 U.S.C. 154(b)(1)(A) which likewise provides the basis for determining the period given the Office to take the specified actions before an adjustment will accrue for "A delay" (e.g., extended for 1 day after the day after the period specified in clauses (i)-(iv)).

Furthermore, these clauses are interpreted using their ordinary meanings. Nonetheless, the context of the legislation should be considered. As stated in Wyeth v. Dudas, (580 F. Supp. 2d 138), because the clock for calculating the 20-year patent term begins to run on the filing date, and not on the day the patent is actually granted, some of the effective term of a patent is consumed by the time it takes to prosecute the application. To mitigate this effect, the statute, *inter alia*, grants adjustments of patent term whenever the patent prosecution takes more than three years, regardless of the reason. The time consumed by prosecution of the application includes every day the application is pending before the Office from the actual filing date of the application in the United States until the date of issuance of the patent. The time it takes to prosecute the application ends not with the mailing of the notice of allowance, but with the issuance of the patent.

Thus, not including "any time consumed by" means not including any days used to prosecute the application as specified in clauses (i)-(ii)[2]. Clause (i) specifies "any time consumed by continued examination of the application requested by the applicant under section 132(b)." Clause (ii) specifies "any time consumed by a proceeding under section 135(a), any time consumed by the imposition of an order under section 181, or any time consumed by appellate review by the Board of Patent Appeals and Interferences or by a Federal court." "Time" in the context of this legislation throughout refers to days. "Consumed by" means used by or used in the course of. *Websters Collegiate Dictionary*, (11th ed.). The "any" signifies that the days consumed by are "any" of the days in the pendency of the application, and not just days that occur after the application has been pending for 3 years. As such, "any time consumed by" refers to any days used in the course of 1) continued examination of the application under section 132(b)(the filing of a request for continued examination), 2) interference proceedings, 3) secrecy orders, and 4) appellate review. Thus, that 3-year period given to the Office to issue a patent before an adjustment will accrue for "B delay" does not include any days used in the course of or any time consumed by clauses (i)-(ii), including any time consumed by the filing of a request for continued examination.

Fourth, "the term of the patent shall be extended 1 day for each day after the end of that 3-year period until the patent is issued" meaning that the consequence of this failure is that after "the end of that 3-year period" an additional 1 day of patent term will accrue for each day that the application is pending until the day the patent is issued.

The "time consumed by" or used in the course of the continued examination of the application requested by the applicant under section 132(b) does not end until issuance of the patent. 35 U.S.C. 132(b) was enacted under the same title, the "American Inventors Protection Act of 1999," as 35 U.S.C. 154(b). Section 4403 of the AIPA amended 35 U.S.C. § 132 to provide, at

---

[2] Clause (iii) provides for not including (iii) any delay in the processing of the application by the United States Patent and Trademark Office requested by the applicant except as permitted by paragraph (3)(C), the term of the patent shall be extended 1 day for each day after the end of that 3-year period until the patent is issued. It is noted that paragraph (3)(C) allows with an adequate showing by applicant for reinstatement of no more than 3 months of the patent term reduced for applicant delay in taking in excess of three months to respond.

the request of the applicant, for continued examination of an application for a fee (request for continued examination or RCE practice), without requiring the applicant to file a continuing application under 37 CFR 1.53(b) or a continued prosecution application (CPA) under 37 CFR 1.53(d). Thus, clause (i) is different from clause (ii) in that clause (i) refers to an examination process whereas clause (ii) refers to time consumed by proceedings (interferences, secrecy orders and appeals) in an application.

By nature, the time used in the course of the examination process continues to issuance of the patent. The examination process involves examining the application to ascertain whether it appears that the applicant is entitled to a patent under the law. See 35 U.S.C. 131 ("[t]he Director shall cause an examination to be made of the application and the alleged new invention; and if on such examination it appears that the applicant is entitled to a patent under the law, the Director shall issue a patent therefor"). If on examination it appears that the applicant is entitled to a patent, the USPTO issues a notice of allowance. See 35 U.S.C. 151 ("[i]f it appears that applicant is entitled to a patent under the law, a written notice of allowance of the application shall be given or mailed to the applicant"). If on examination it appears that the applicant is not entitled to a patent, the USPTO issues a notice (an Office action) stating the applicable rejection, objection, or other requirement, with the reasons therefor. See 35 U.S.C. 132 ("[w]henever, on examination, any claim for a patent is rejected, or any objection or requirement made, the Director shall notify the applicant thereof, stating the reasons for such rejection, or objection or requirement, together with such information and references as may be useful in judging of the propriety of continuing the prosecution of his application"). Neither the issuance of a notice of allowance nor the issuance of an Office action terminates the examination process. If after the issuance of an Office action under 35 U.S.C. 132 it subsequently appears that the applicant is entitled to a patent (e.g., in response to an argument or amendment by the applicant), the USPTO will issue a notice of allowance. Conversely, if after the issuance of a notice of allowance under 35 U.S.C. 151 it subsequently appears that the applicant is not entitled to a patent (e.g., in response to information provided by the applicant or uncovered by the USPTO), the USPTO will withdraw the application from issuance and issue an Office action under 35 U.S.C. 132 stating the applicable rejection, objection, or other requirement, with the reasons therefor.

As held in Blacklight Power, the USPTO's responsibility to issue a patent containing only patentable claims does not end with the issuance of a notice of allowance under 35 U.S.C. 151. See BlackLight Power, Inc. v. Rogan, 295 F.3d 1269, 1273 (Fed. Cir. 2002). Rather, if there is any substantial, reasonable ground within the knowledge or cognizance of the Director as to why an application should not issue, it is the USPTO's duty to refuse to issue the patent even if a notice of allowance has previously been issued for the application. See In re Drawbaugh, 9 App. D.C. 219, 240 (D.C. Cir 1896).

Moreover, the applicant continues to be engaged in the examination process after the mailing of the notice of allowance. 37 CFR 1.56 makes clear that the applicant has a duty to disclose information material to patentability as long as the application is pending before the USPTO (i.e., until a patent is granted or the application is abandoned). See 37 CFR 1.56(a) ("[t]he duty to disclose information exists with respect to each pending claim until the claim is cancelled or

withdrawn from consideration, or the application becomes abandoned"). 37 CFR 1.97 and 1.98 provide for the consideration of information submitted by the applicant after a notice of allowance has been mailed. See 37 CFR 1.97(d). In addition, 37 CFR 1.312 provides for the amendment of an application after a notice of allowance has been mailed. In fact, the request for examination procedures[3] permit the filing of a request for continued examination under 37 CFR 1.114 even after the issuance of a notice of allowance under 35 U.S.C. 151. See 37 CFR 1.114(a)(1).

As the examination process does not terminate with the mailing of the notice of allowance, the time consumed by continued examination requested by the applicant under section 132(b) does not terminate with the mailing of the notice of allowance. All the time the application is pending from the date of filing of the request for continued examination to the mailing of the notice of allowance through issuance of the patent is a consequence of the filing of the request for continued examination. Further action by the Office is pursuant to that request. Applicant has gotten further prosecution of the application without having to file a continuing application under 37 CFR 1.53(b).

All of the continued examination pursuant to the filing of the request by the applicant is properly excluded from the delay attributed to the Office. 35 U.S.C. 154(b)(1)(B)'s guarantee of a total application pendency of no more than three years provides for adjustment of the patent term for delay due to the Office's failure to issue the patent within three years, but does not include "any time consumed by continued examination requested by the applicant under 35 U.S.C. 132(b)." It is not necessary to mitigate the effect on the 20-year term to the extent that applicant has requested that the Office continue to examine the application via a request for continued examination, in lieu of, the filing of a continuing application under 37 CFR 1.53(b).

In this instance, a request for continued examination was filed on July 8, 2008, and the patent issued by virtue of that request on April 26, 2011. Pursuant to 35 U.S.C. 154(b)(1)(B)(i), the period beginning on July 8, 2008 and ending on April 26, 2011 is not included in calculating Office delay.

Telephone inquiries specific to this matter should be directed to Petitions Attorney Cliff Congo at (571) 272-3207.

Anthony Knight
Director
Office of Petitions

---

[3] Thus, on occasion, even where a request for continued examination has already been filed and a notice of allowance issued pursuant to that request, applicant may file a further request for continued examination.

UNITED STATES PATENT AND TRADEMARK OFFICE

Commissioner for Patents
United States Patent and Trademark Office
P.O. Box 1450
Alexandria, VA 22313-1450
www.uspto.gov

LORD CORPORATION
PATENT & LEGAL SERVICES
111 LORD DRIVE
P.O. Box 8012
CARY NC 27512-8012

MAILED
APR 12 2011
OFFICE OF PETITIONS

In re Application of	:	
Paul Balczun	:	
Application No. 11/257,299	:	DECISION ON PETITION
Filed: October 24, 2005	:	
Attorney Docket No. **IR-3464 (MVE)**	:	

This is a decision on the petition under the unintentional provisions of 37 CFR 1.137(b), filed March 15, 2011, to revive the above-identified application.

The petition is **GRANTED**.

The application became abandoned for failure to reply in a timely manner to the Restriction Requirement, mailed September 2, 2010, which set a shortened statutory period for reply of one (1) month or thirty (30) days (whichever is later). No extensions of time under the provisions of 37 CFR 1.136(a) were obtained. Accordingly, the application became abandoned on October 3, 2010.

The petition satisfies the requirements of 37 CFR 1.137(b) in that petitioner has supplied (1) the reply in the form of an Election, (2) the petition fee of $1,620, and (3) a proper statement of unintentional delay.

Telephone inquiries concerning this decision should be directed to JoAnne Burke at (571)272-4584.

This application is being referred to Technology Center AU 3657 for appropriate action by the Examiner in the normal course of business on the reply received.

JoAnne Burke
Petitions Examiner
Office of Petitions

UNITED STATES PATENT AND TRADEMARK OFFICE

Commissioner for Patents
United States Patent and Trademark Office
P.O. Box 1450
Alexandria, VA 22313-1450
www.uspto.gov

WHITHAM, CURTIS & CHRISTOFFERSON
& COOK, P.C.
11491 SUNSET HILLS ROAD
SUITE 340
RESTON VA 20190

MAILED

NOV 22 2010

OFFICE OF PETITIONS

In re Patent No. 7,199,695	:	
Issue Date: April 3, 2007	:	
Application No. 11/257,404	:	NOTICE
Filed: October 24, 2006	:	
Attorney Docket No. 01640531AA	:	

This is a notice regarding your request for acceptance of a fee deficiency submission under 37 CFR 1.28 filed October 15, 2010. On September 1, 1998, the Court of Appeals for the Federal Circuit held that 37 CFR 1.28(c) is the sole provision governing the time for correction of the erroneous payment of the issue fee as a small entity. **See DH Technology v. Synergystex International, Inc. 154 F.3d 1333, 47 USPQ2d 1865 (Fed. Cir. Sept. 1, 1998).**

The Office no longer investigates or rejects original or reissue applications under 37 CFR 1.56. **1098 Off. Gaz. Pat. Office 502 (January 3, 1989)**. Therefore, nothing in this Notice is intended to imply that an investigation was done.

Your fee deficiency submission under 37 CFR 1.28 is hereby accepted. The petition is **GRANTED**.

This application is no longer entitled to small entity status. Accordingly, all future fees paid in this application must be paid at the large entity rate.

This file is being forwarded to Files Repository.

Telephone inquiries related to this decision should be directed to the Kimberly Inabinet at (571) 272-4618.

/Carl Friedman/
Carl Friedman
Petitions Examiner
Office of Petitions

UNITED STATES PATENT AND TRADEMARK OFFICE

Commissioner for Patents
United States Patent and Trademark Office
P.O. Box 1450
Alexandria, VA 22313-1450
www.uspto.gov

MAILED

FEB 14 2011

OFFICE OF PETITIONS

BRINKS HOFER GILSON & LIONE
P.O. BOX 10395
CHICAGO IL 60610

In re Patent No. 7,531,833	: DECISION ON PATENT TERM
Issued: May 12, 2009	: ADJUSTMENT and NOTICE OF INTENT
Application No. 11/257,409	: TO ISSUE CERTIFICATE OF
Filed: October 12, 2005	: CORRECTION
Dkt. No.: 12580-4183	:

This is a decision on the petition filed on June 30, 2009 requesting that the patent term adjustment indicated on the above-identified patent be corrected to indicate that the term of the above-identified patent is extended or adjusted by 662 days.

The petition to correct the patent term adjustment indicated on the above-identified patent to indicate that the term of the above-identified patent is extended or adjusted by 662 days is **GRANTED**.

The required $200.00 fee set forth in 37 CFR 1.18(e) has been charged to the authorized deposit account.

The application is being forwarded to the Certificates of Corrections Branch for issuance of a certificate of correction. The Office will issue a certificate of correction indicating that the term of the above-identified patent is extended or adjusted by **662** days.

Nothing in this decision shall be construed as a waiver of the requirement of 35 U.S.C. 154(b)(4) that any civil action by an applicant dissatisfied with a determination made by the Director under 35 U.S.C. 154(b)(3) be filed in the United States District Court for the District of Columbia within 180 days after the grant of the patent.

Telephone inquiries specific to this matter should be directed to the undersigned at (571) 272-3205.

/ALESIA M. BROWN/

Alesia M. Brown
Attorney Advisor
Office of Petitions

Enclosure: Copy of DRAFT Certificate of Correction

UNITED STATES PATENT AND TRADEMARK OFFICE

CERTIFICATE OF CORRECTION

PATENT : 7,531,833

DATED : **May 12, 2009** **DRAFT**

INVENTOR(S) : Kim, et al.

It is certified that error appears in the above-identified patent and that said Letters Patent is hereby corrected as shown below:

On the cover page,

[*] Notice: Subject to any disclaimer, the term of this patent is extended or adjusted under 35 USC 154(b) by 450 days

Delete the phrase "by 450 days" and insert – by 662 days--

UNITED STATES PATENT AND TRADEMARK OFFICE

Commissioner for Patents
United States Patent and Trademark Office
P.O. Box 1450
Alexandria, VA 22313-1450
www.uspto.gov

COGNEX CORPORATION
INTELLECTUAL PROPERTY DEPARTMENT
1 VISION DRIVE
NATICK MA 01760-2077

MAILED

AUG 23 2010

OFFICE OF PETITIONS

In re Application of	:	
Laurens Nunnink et al	:	
Application No. 11/257,411	:	DECISION GRANTING PETITION
Filed: October 24, 2005	:	UNDER 37 CFR 1.313(c)(2)
Attorney Docket No. C05-015	:	

This is a decision on the petition under 37 CFR 1.313(c)(2), filed August 20, 2010, to withdraw the above-identified application from issue after payment of the issue fee.

The petition is **GRANTED**.

The above-identified application is withdrawn from issue for consideration of a submission under 37 CFR 1.114 (request for continued examination). *See* 37 CFR 1.313(c)(2).

Petitioner is advised that the issue fee paid on August 10, 2010 cannot be refunded. If, however, this application is again allowed, petitioner may request that it be applied towards the issue fee required by the new Notice of Allowance.[1]

The file does not indicate a change of address has been submitted, although the address given on the petition differs from the address of record. If appropriate, a change of address should be filed in accordance with MPEP 601.03. A courtesy copy of this decision is being mailed to the address given on the petition; however, the Office will mail all future correspondence solely to the address of record.

Telephone inquiries should be directed to the undersigned at (571) 272-3208.

---

[1] *The request to apply the issue fee to the new Notice may be satisfied by completing and returning the new Part B – Fee(s) Transmittal Form (along with any balance due at the time of submission). Petitioner is advised that the Issue Fee Transmittal Form must be completed and timely submitted to avoid abandonment of the application.*

This application is being referred to Technology Center AU 2876 for processing of the request for continued examination under 37 CFR 1.114 and for consideration of the concurrently filed IDS.

/Karen Creasy/
Karen Creasy
Petitions Examiner
Office of Petitions

Cc:

QUARLES & BRADY, LLP
411 EAST WISCONSIN AVENUE
MILWAUKEE WI 53202

UNITED STATES PATENT AND TRADEMARK OFFICE

Commissioner for Patents
United States Patent and Trademark Office
P.O. Box 1450
Alexandria, VA 22313-1450
www.uspto.gov

ROGITZ & ASSOCIATES
750 B STREET
SUITE 3120
SAN DIEGO CA 92101

MAILED
FEB 11 2011
OFFICE OF PETITIONS

In re Application: :
Camaisa et al. :
Application No. 11/257,421 : ON PETITION
Filed: October 24, 2005 :
Attorney Docket No. 1196-1CP2 :

This is a notice regarding your request for acceptance of a fee deficiency submission under 37 CFR 1.28 filed December 23, 2010.

On September 1, 1998, the Court of Appeals for the Federal Circuit held that 37 CFR 1.28(c) is the sole provision governing the time for correction of the erroneous payment of the issue fee as a small entity. **See DH Technology v. Synergystex International, Inc. 154 F.3d 1333, 47 USPQ2d 1865 (Fed. Cir. Sept. 1, 1998).**

The Office no longer investigates or rejects original or reissue applications under 37 CFR 1.56. **1098 Off. Gaz. Pat. Office 502 (January 3, 1989).** Therefore, nothing in this Notice is intended to imply that an investigation was done.

Your fee deficiency submission under 37 CFR 1.28 is hereby **ACCEPTED**.

This application is no longer entitled to small entity status. Accordingly, all future fees paid in this application must be paid at the large entity rate.

Telephone inquires concerning this decision should be directed to the undersigned at (571) 272-7751.

Joan Olszewski
Petitions Examiner
Office of Petitions

UNITED STATES PATENT AND TRADEMARK OFFICE

Commissioner for Patents
United States Patent and Trademark Office
P.O. Box 1450
Alexandria, VA 22313-1450
www.uspto.gov

BALLARD SPAHR LLP
SUITE 1000
999 PEACHTREE STREET
ATLANTA GA 30309-3915

MAILED

OCT 12 2010

OFFICE OF PETITIONS

In re Application:	:	
Goren et al.	:	
Application No. 11/257,448	:	ON PETITION
Filed: October 24, 2005	:	
Attorney Docket No. 19109.0027U2	:	

This is a notice regarding your request for acceptance of a fee deficiency submission under 37 CFR 1.28. On September 1, 1998, the Court of Appeals for the Federal Circuit held that 37 CFR 1.28(c) is the sole provision governing the time for correction of the erroneous payment of the issue fee as a small entity. **See DH Technology v. Synergystex International, Inc. 154 F.3d 1333, 47 USPQ2d 1865 (Fed. Cir. Sept. 1, 1998).**

The Office no longer investigates or rejects original or reissue applications under 37 CFR 1.56. **1098 Off. Gaz. Pat. Office 502 (January 3, 1989).** Therefore, nothing in this Notice is intended to imply that an investigation was done.

Your fee deficiency submission under 37 CFR 1.28 is hereby **ACCEPTED**.

This application is no longer entitled to small entity status. Accordingly, all future fees paid in this application must be paid at the large entity rate.

Additionally, it is not apparent whether the person signing the instant petition was ever given a power of attorney or authorization of agent to prosecute this patent application. In accordance with 37 CFR 1.34(a), the signature appearing on the petition shall constitute a representation to the United States Patent and Trademark Office that he/she is authorized to represent the particular party in whose behalf he/she acts.

Telephone inquires concerning this decision should be directed to the undersigned at (571) 272-7751.

Joan Olszewski

Joan Olszewski
Petitions Examiner
Office of Petitions

UNITED STATES PATENT AND TRADEMARK OFFICE

Commissioner for Patents
United States Patent and Trademark Office
P.O. Box 1450
Alexandria, VA 22313-1450
www.uspto.gov

MAILED
AUG 12 2011
OFFICE OF PETITIONS

RISSMAN HENDRICKS & OLIVERIO, LLP
100 Cambridge Street
Suite 2101
BOSTON MA 02114

In re Application of	:	
Harder et al.	:	
Application No. 11/257,535	:	RESPONSE TO PETITION
Filed: October 25, 2005	:	
Attorney Docket No. C038-7010US0	:	

This is a response to the petition under 37 CFR 1.59(b), filed June 22 2011, to expunge information from the above identified application.

The petition is dismissed.

Petitioner requests that the fax cover sheet (1 page), specification (66 pages), claims (6 pages), abstract (1 page), and drawings (11 pages) filed on January 26, 2009 be expunged from the above identified application. The petition submits that these documents were inadvertently filed.

However, these documents do not present identifying information that is different from the above identified application and present subject matter that is similar to that of the above identified application. The documents are not clear on their face that they were submitted in the wrong application. Accordingly, the petition is recognized as premature since prosecution of the above identified application has not been closed by way of the allowance of the application, the mailing of an Ex parte Quayle action, or the abandonment of the application. See MPEP 724.06. Accordingly, it is not appropriate to make a final determination of whether or not the documents requested to be expunged are "material," with "materiality" being defined as any information which the examiner considers as being important to a determination of patentability of the application. Thus, the decision on the petition to expunge must be dismissed at this time.

During prosecution on the merits, the examiner will determine whether or not the identified documents are considered to be "material." If the information is not considered by the examiner to be material and the conditions related to the expungement of unintentionally submitted information, discussed as A-F in MPEP 724.05 II, are satisfied, the documents will be removed from the official file.

After the mailing of a Notice of Allowance, an Ex parte Quayle action or a Notice of Abandonment, the petition to expunge may be renewed by applicants or applicants' representative. No further fee is required for such a second submission of a petition under 37

CFR 1.59 to expunge information. **In addition, the requester is cautioned to renew the petition under 37 CFR 1.59 for reconsideration by the Office prior to the point at which the present file, or file claiming priority to the present file, is forwarded for issuance of the patent. This is to be done no later than immediately after the examiner has issued a Notice of Allowance, an Ex parte Quayle action or a Notice of Abandonment. A failure to timely renew the petition to expunge prior to the point at which the file is forwarded for issuance will result in the material being retained in the patented file and thus becoming open to the public.**

Telephone inquiries concerning this communication should be directed to the undersigned at (571) 272-6692.

Christopher Bottorff
Petitions Examiner
Office of Petitions

UNITED STATES PATENT AND TRADEMARK OFFICE

Commissioner for Patents
United States Patent and Trademark Office
P.O. Box 1450
Alexandria, VA 22313-1450
www.uspto.gov

GEORGE G. GRIGEL
PAINE HAMBLEN, LLP
SUITE 1200
717 W. SPRAGUE AVENUE
SPOKANE, WA 99201-3505

MAILED
FEB 01 2012
OFFICE OF PETITIONS

In re Patent No. 7,273,307
Issue Date: September 25, 2007
Application No. 11/257,556
Filed: October 25, 2005
Attorney Docket No. 37827-00013

ON PETITION

This is a decision on the petition under 37 CFR 1.378(c), filed December 12, 2011, to accept the unintentionally delayed payment of a maintenance fee for the above-identified patent.

The petition is **GRANTED**.

This patent expired on September 25, 2011 for failure to pay the 3 ½ year maintenance fee. Since this petition was submitted within twenty-four months after the six-month grace period provided in 37 CFR 1.362(e), the petition was timely filed under the provisions of 37 CFR 1.378(c).

The maintenance fee is hereby accepted and the above-identified patent is reinstated as of the mail date of this decision.

Telephone inquiries concerning this decision should be directed to undersigned at (571) 272-1642.

/AMW/
April M. Wise
Petitions Examiner
Office of Petitions

PTO/SB/66 (03-09)
Approved for use through 03/31/2012. OMB 0651-0016
U.S. Patent and Trademark Office: U.S. DEPARTMENT OF COMMERCE
Under the Paperwork Reduction Act of 1995, no persons are required to respond to a collection of information unless it displays valid OMB control number.

PETITION TO ACCEPT UNINTENTIONALLY DELAYED PAYMENT OF MAINTENANCE FEE IN AN EXPIRED PATENT (37 CFR 1.378(c))

Patent Number	Issue Date (YYYY-MM-DD)	Application Number	Filing Date (YYYY-MM-DD)	Docket Number (if applicable)
7,194,950	2007-03-27	11/257,630	2005-10-25	

CAUTION: Maintenance fee (and surcharge, if any) payment must correctly identify: (1) the patent number and (2) the application number of the actual U.S. application leading to issuance of that patent to ensure the fee(s) is/are associated with the correct patent. 37 CFR 1.366(c) and (d).

SMALL ENTITY
☒ Patentee claims, or has previously claimed, small entity status. See 37 CFR 1.27.

LOSS OF ENTITLEMENT TO SMALL ENTITY STATUS
☐ Patentee is no longer entitled to small entity status. See 37 CFR 1.27(g)

NOT Small Entity		Small Entity	
Fee	Code	Fee	Code
○ 3 ½ year	(1551)	● 3 ½ year	(2551)
○ 7 ½ year	(1552)	○ 7 ½ year	(2552)
○ 11 ½ year	(1553)	○ 11 ½ year	(2553)

SURCHARGE
The surcharge required by 37 CFR 1.20(i)(2) (Fee Code 1558) must be paid as a condition of accepting unintentionally delayed payment of the maintenance fee.

MAINTENANCE FEE (37 CFR 1.20(e)-(g))
The appropriate maintenance fee must be submitted with this petition.

STATEMENT
THE UNDERSIGNED CERTIFIES THAT THE DELAY IN PAYMENT OF THE MAINTENANCE FEE TO THIS PATENT WAS UNINTENTIONAL

PETITIONER(S) REQUEST THAT THE DELAYED PAYMENT OF THE MAINTENANCE FEE BE ACCEPTED AND THE PATENT REINSTATED

THIS PORTION MUST BE COMPLETED BY THE SIGNATORY OR SIGNATORIES

37 CFR 1.378(d) states: "Any petition under this section must be signed by an attorney or agent registered to practice before the Patent and Trademark Office, or by the patentee, the assignee, or other party in interest."

I certify, in accordance with 37 CFR 1.4(d)(4) that I am

- ● An attorney or agent registered to practice before the Patent and Trademark Office
- ○ A sole patentee
- ○ A joint patentee; I certify that I am authorized to sign this submission on behalf of all the other patentees.
- ○ A joint patentee; all of whom are signing this e-petition
- ○ The assignee of record of the entire interest

Under the Paperwork Reduction Act of 1995, no persons are required to respond to a collection of information unless it displays valid OMB control number.

Patent Practitioner			
A signature of the applicant or representative is required in accordance with 37 CFR 1.33 and 10.18. Please see 37 CFR 1.4(d) for the form of the signature			
Signature	/Anthony L. Rahhal/	Date (YYYY-MM-DD)	2011-08-31
Name	Anthony L. Rahhal	Registration Number	37562

This collection of information is required by 37 CFR 1.378(c). The information is required to obtain or retain a benefit by the public which is to file (and by the USPTO to process) an application. Confidentiality is governed by 35 U.S.C. 122 and 37 CFR 1.11 and 1.14. This collection is estimated to take 1 hour to complete, including gathering, preparing, and submitting the completed application form to the USPTO. Time will vary depending upon the individual case. Any comments on the amount of time you require to complete this form and/ or suggestions for reducing this burden, should be sent to the Chief Information Officer, U.S. Patent and Trademark Office, U.S. Department of Commerce, P.O. Box 1450, Alexandria, VA 22313-1450. DO NOT SEND FEES OR COMPLETED FORMS TO THIS ADDRESS. **This form can only be used when in conjunction with EFS-Web. If this form is mailed to the USPTO, it may cause delays in reinstating the patent.**

Privacy Act Statement

The Privacy Act of 1974 (P.L. 93-579) requires that you be given certain information in connection with your submission of the attached form related to a patent application or patent. Accordingly, pursuant to the requirements of the Act, please be advised that: (1) the general authority for the collection of this information is 35 U.S.C. 2(b)(2); (2) furnishing of the information solicited is voluntary; and (3) the principal purpose for which the information is used by the U.S. Patent and Trademark Office is to process and/or examine your submission related to a patent application or patent. If you do not furnish the requested information, the U.S. Patent and Trademark Office may not be able to process and/or examine your submission, which may result in termination of proceedings or abandonment of the application or expiration of the patent.

The information provided by you in this form will be subject to the following routine uses:

1. The information on this form will be treated confidentially to the extent allowed under the Freedom of Information Act (5 U.S.C. 552) and the Privacy Act (5 U.S.C. 552a). Records from this system of records may be disclosed to the Department of Justice to determine whether the Freedom of Information Act requires disclosure of these records.

2. A record from this system of records may be disclosed, as a routine use, in the course of presenting evidence to a court, magistrate, or administrative tribunal, including disclosures to opposing counsel in the course of settlement negotiations.

3. A record in this system of records may be disclosed, as a routine use, to a Member of Congress submitting a request involving an individual, to whom the record pertains, when the individual has requested assistance from the Member with respect to the subject matter of the record.

4. A record in this system of records may be disclosed, as a routine use, to a contractor of the Agency having need for the information in order to perform a contract. Recipients of information shall be required to comply with the requirements of the Privacy Act of 1974, as amended, pursuant to 5 U.S.C. 552a(m).

5. A record related to an International Application filed under the Patent Cooperation Treaty in this system of records may be disclosed, as a routine use, to the International Bureau of the World Intellectual Property Organization, pursuant to the Patent Cooperation Treaty.

6. A record in this system of records may be disclosed, as a routine use, to another federal agency for purposes of National Security review (35 U.S.C. 181) and for review pursuant to the Atomic Energy Act (42 U.S.C. 218(c)).

7. A record from this system of records may be disclosed, as a routine use, to the Administrator, General Services, or his/her designee, during an inspection of records conducted by GSA as part of that agency's responsibility to recommend improvements in records management practices and programs, under authority of 44 U.S.C. 2904 and 2906. Such disclosure shall be made in accordance with the GSA regulations governing inspection of records for this purpose, and any other relevant (i.e., GSA or Commerce) directive. Such disclosure shall not be used to make determinations about individuals.

8. A record from this system of records may be disclosed, as a routine use, to the public after either publication of the application pursuant to 35 U.S.C. 122(b) or issuance of a patent pursuant to 35 U.S.C. 151. Further, a record may be disclosed, subject to the limitations of 37 CFR 1.14, as a routine use, to the public if the record was filed in an application which became abandoned or in which the proceedings were terminated and which application is referenced by either a published application, an application open to public inspections or an issued patent.

9. A record from this system of records may be disclosed, as a routine use, to a Federal, State, or local law enforcement agency, if the USPTO becomes aware of a violation or potential violation of law or regulation.

UNITED STATES PATENT AND TRADEMARK OFFICE

Commissioner for Patents
United States Patent and Trademark Office
P.O. Box 1450
Alexandria, VA 22313-1450
www.uspto.gov

In re Patent No. 7194950
Issue Date: March 27,2007
Application No. 11257630
Filed: October 25,2005
Attorney Docket No. 030676/292451

:
:DECISION GRANTING PETITION
:UNDER 37 CFR 1.378(c)
:

This is a decision on the electronic petition, filed August 31,2011 ,under 37 CFR 1.378(c) to accept the unintentionally delayed payment of the 3.5 year maintenance fee for the above-identified patent.

The petition is **GRANTED**.

The maintenance fee is accepted, and the above-identified patent reinstated as of August 31,2011 . This decision also constitutes notice that the fee has been accepted. An electronic copy of the petition and this decision has been created as an entry in the Image File Wrapper. Nevertheless, petitioner should print and retain an independent copy.

Telephone inquiries related to this electronic decision should be directed to the Electronic Business Center at 1-866-217-9197.

UNITED STATES PATENT AND TRADEMARK OFFICE

Commissioner for Patents
United States Patent and Trademark Office
P.O. Box 1450
Alexandria, VA 22313-1450
www.uspto.gov

KOKKA & BACKUS, PC
703 High Street
PALO ALTO CA 94301

MAILED
FEB 07 2011
OFFICE OF PETITIONS

In re Patent No. 7,793,256	
Charisius et al.	DECISION ON REQUEST FOR
Issue Date: September 7, 2010	RECONSIDERATION OF
Application No. 11/257,724	PATENT TERM ADJUSTMENT
Filed: October 25, 2005	
Attorney Docket No. BOR-094A1CIPDIV	
Title: METHODS AND SYSTEMS FOR SUPPORTING AND DEPLOYING DISTRIBUTED COMPUTING COMPONENTS	

This is a decision on the "REQUEST FOR RECONSIDERATION OF PATENT TERM ADJUSTMENT PURSUANT TO 37 CFR § 1.705(d)" filed on November 5, 2010, requesting that the patent term adjustment indicated on the above-identified patent be corrected to indicate that the term of the above-identified patent is extended or adjusted by one thousand twenty-four (1024) days. Patentees dispute the 34-day reduction.

The petition to correct the patent term adjustment indicated on the above-identified patent is **Dismissed**.

The $200.00 petition fee set forth in 37 CFR 1.18(e) has been assessed. No additional fees are required.

Patentees dispute the 34 day reduction taken for the submission of the corrected drawings submitted on August 5, 2010 after the mailing of the Notice of Allowance. Patentees maintain a 14 day reduction, instead of a 34 day reduction is required.

Patentees' argument has been considered and determined to be not persuasive. A reduction of 34 days, not 14 days is required.

37 CFR 1.704(c) provides that:

Circumstances that constitute a failure of the applicant to engage in reasonable efforts to conclude processing or examination of an application also include the following circumstances, which will result in the following reduction of the period of adjustment set forth in § 1.703 to the extent that the periods are not overlapping:

37 CFR 1.704 (c)(10) provides:

(10) Submission of an amendment under § 1.312 or other paper after a notice of allowance has been given or mailed, in which case the period of adjustment set forth in § 1.703 shall be reduced by the lesser of:

i) The number of days, if any, beginning on the date the amendment under § 1.312 or other paper was filed and ending on the mailing date of the Office action or notice in response to the amendment under § 1.312 or such other paper;

or

(ii) Four months;

A review of the record shows a reduction pursuant to 37 CFR 1.704(c)(10) of 34 days for the submission of the drawings on August 5, 2010 is required. The reduction is calculated beginning August 5, 2010 and ending on September 7, 2010, the date the patent issued. The issue date is the response date, not the mailing of the issue notification.

Patentees' delay total 126 (62 + 30 + 34) days. It is noted that the Office does not find a 43 day reduction is warranted for a submission on March 11, 2009.

In view thereof, the patent is entitled to an overall adjustment of 1004 days.

Nothing in this decision shall be construed as a waiver of the requirement of 35 U.S.C. 154(b)(4) that any civil action by an applicant dissatisfied with a determination made by the Director under 35 U.S.C. 154(b)(3) be filed in the United States District

Court for the District of Columbia within 180 days after the grant of the patent.

Telephone inquiries specific to this matter should be directed to the undersigned at (571) 272-3215.

Charlema Grant
Attorney
Office of Petitions

UNITED STATES PATENT AND TRADEMARK OFFICE

Commissioner for Patents
United States Patent and Trademark Office
P.O. Box 1450
Alexandria, VA 22313-1450
www.uspto.gov

MCANDREWS, HELD & MALLOY, LTD.
500 WEST MADISON ST.
SUITE 3400
CHICAGO IL 60661

MAILED

SEP 17 2010

OFFICE OF PETITIONS

In re Patent No. 7,630,434
Issued: December 8, 2009
Application No. 11/257,810
Filed: October 25, 2005
Attorney Docket No. 13473US03

: LETTER REGARDING
: PATENT TERM ADJUSTMENT

This is a decision on the "REQUEST FOR RECONSIDERATION OF USPTO RECALCULATION OF PATENT TERM ADJUSTMENT IN VIEW OF WYETH" filed on May 27, 2010, requesting that the patent term adjustment indicated on the above-identified patent be corrected from 718 days to 719 days.

The request for review of the patent term adjustment is **DISMISSED.**

Patentees are given **THIRTY (30) DAYS or ONE (1) MONTH, whichever is longer,** from the mail date of this decision to respond. No extensions of time will be granted under § 1.136.

The patent term adjustment indicated in the patent is properly reflected.

The patent term adjustment calculation has been reviewed. Patentees have miscalculated the delay pursuant to 37 CFR § 1.704(c)(10). The first day of the calculation is September 22, 2009, the date the 37 CFR § 1.312 amendment was filed, and ends on September 28, 2009, the date the response was filed, for a total of 7 days.

As stated in M.P.E. P. 2732

37 CFR 1.703 specifies the period of adjustment if a patent is entitled to patent term adjustment under 35 U.S.C. 154(b)(1) and 37 CFR 1.702. When a period is indicated (in 37 CFR 1.703 or 1.704) as "beginning" on a particular day, that day is included in the period, in that such day is "day one" of the period and not "day zero." For example, a period beginning on April 1 and ending on April 10 is ten (and not nine) days in length. 35 U.S.C. 154(b)(1)(A) and (B) provide for an adjustment of one day for each day after the end of the period set forth in 35 U.S.C. 154(b)(1)(A)(i), (ii), (iii), (iv), and (B) until the prescribed action is taken, whereas 35 U.S.C. 154(b)(1)(C) provides for an adjustment of one day for each day of the pendency of the proceeding, order, or review prescribed

in 35 U.S.C. 154(b)(1)(C)(i) through (iii). Therefore, the end of the period set forth in 37 CFR 1.703(a) and 1.703(b) (which correspond to 35 U.S.C. 154(b)(1)(A) and (B)) is "day zero" (not "day one") as to the period of adjustment, whereas the first day of the proceeding, order, or review set forth in 37 CFR 1.703(c), 1.703(d), and 1.703(e) (which correspond to 35 U.S.C. 154(b)(1)(C)(i) through (iii)) is "day one" of the period of adjustment.

As such, the total patent term adjustment is seven hundred eighteen days.

The Office acknowledges submission of the $200.00 fee set forth in 37 CFR 1.18(e). No additional fees are required.

Telephone inquiries specific to this decision should be directed to the undersigned at (571) 272-3212.

Patricia Faison-Ball

Patricia Faison-Ball
Senior Petitions Attorney
Office of Petitions

UNITED STATES PATENT AND TRADEMARK OFFICE

Commissioner for Patents
United States Patent and Trademark Office
P.O. Box 1450
Alexandria, VA 22313-1450
www.uspto.gov

AKA CHAN LLP / ORACLE
900 LAFAYETTE STREET
SUITE 710
SANTA CLARA CA 95050

MAILED
JAN 24 2011
OFFICE OF PETITIONS

In re Application of	:	
Hoynowski et al.	:	DECISION ON PETITION
Application No. 11/257,954	:	TO WITHDRAW
Filed: October 25, 2005	:	FROM RECORD
Attorney Docket No. ORACP030	:	

This is a decision on the Request to Withdraw as attorney or agent of record under 37 C.F.R. § 1.36(b), filed December 22, 2010.

The request is **NOT APPROVED**.

The Office will only accept correspondence address changes to the most current address information provided for the assignee of the entire interest *who properly became of record under 37 CFR 3.71,* or, if no assignee of the entire interest has properly been made of record, the most current address information provided for the first named inventor. 37 CFR 3.71(c) states:

An assignee becomes of record either in a national patent application or a reexamination proceeding by filing a statement in compliance with § 3.73(b) that is signed by a party who is authorized to act on behalf of the assignee.

According to a review of current USPTO records petitioner has not requested the address be changed to a properly recorded assignee or the first listed inventor. The Customer Number 56135 is neither the first named inventor nor the assignee who properly became of record under 37 CFR 3.71 As such, all future communications from the Office will continue to be directed to the above-listed address until otherwise notified by applicant.

Currently, there is an outstanding Office action mailed December 22, 2010 that requires a reply.

Telephone inquires concerning this decision should be directed to the undersigned at (571) 272-7751.

Joan Olszewski

Joan Olszewski
Petitions Examiner
Office of Petitions

UNITED STATES PATENT AND TRADEMARK OFFICE

Commissioner for Patents
United States Patent and Trademark Office
P.O. Box 1450
Alexandria, VA 22313-1450
www.uspto.gov

MUNCY, GEISSLER, OLDS & LOWE, PLLC
4000 LEGATO ROAD
SUITE 310
FAIRFAX VA 22033

MAILED
OCT 06 2010
OFFICE OF PETITIONS

In re Application:	:	
Frederick W. Zeyfang	:	
Application No. 11/258,122	:	ON PETITION
Filed: October 26, 2005	:	
Attorney Docket No. 3914-0116PUS1	:	

This is a notice regarding your request for acceptance of a fee deficiency submission under 37 CFR 1.28. On September 1, 1998, the Court of Appeals for the Federal Circuit held that 37 CFR 1.28(c) is the sole provision governing the time for correction of the erroneous payment of the issue fee as a small entity. **See DH Technology v. Synergystex International, Inc. 154 F.3d 1333, 47 USPQ2d 1865 (Fed. Cir. Sept. 1, 1998).**

The Office no longer investigates or rejects original or reissue applications under 37 CFR 1.56. **1098 Off. Gaz. Pat. Office 502 (January 3, 1989)**. Therefore, nothing in this Notice is intended to imply that an investigation was done.

Your fee deficiency submission under 37 CFR 1.28 is hereby **ACCEPTED**.

This application is no longer entitled to small entity status. Accordingly, all future fees paid in this application must be paid at the large entity rate.

Telephone inquires concerning this decision should be directed to the undersigned at (571) 272-7751.

Joan Olszewski

Joan Olszewski
Petitions Examiner
Office of Petitions

UNITED STATES PATENT AND TRADEMARK OFFICE

Commissioner for Patents
United States Patent and Trademark Office
P.O. Box 1450
Alexandria, VA 22313-1450
www.uspto.gov

MAILED

SEP 08 2010

OFFICE OF PETITIONS

UNISONE CORPORATION
510 S. CONGRESS AVENUE, SUITE 204
AUSTIN TX 7804

In re Application of	:	
Michael T. LUCAS	:	
Application No. 11/258,140	:	DECISION ON PETITION
Filed: October 26, 2005	:	
Docket No. 265-12-C	:	

This is a decision on the petition under the unintentional provisions of 37 CFR 1.137(b), filed June 28, 2010, to revive the above-identified application.

The petition is **GRANTED**.

The application became abandoned for failure to reply in a timely manner to the non-final Office action mailed, September 10, 2008, which set a shortened statutory period for reply of **three (3) months**. No extensions of time under the provisions of 37 CFR 1.136(a) were obtained. Accordingly, the application became abandoned on December 11, 2008.

The petition satisfies the requirements of 37 CFR 1.137(b) in that petitioner has supplied (1) the reply in the form of an amendment, (2) the petition fee of $810; and (3) and the required statement of unintentional delay.

Telephone inquiries concerning this decision should be directed to the undersigned at (571) 272-6735.

All other inquiries should be directed to the Technology Center at (571) 272-3600.

This application is being referred to Technology Center AU 3627 for appropriate action by the Examiner in the normal course of business.

/dcg/
Diane C. Goodwyn
Petitions Examiner
Office of Petitions

UNITED STATES PATENT AND TRADEMARK OFFICE

UNITED STATES DEPARTMENT OF COMMERCE
United States Patent and Trademark Office
Address: COMMISSIONER FOR PATENTS
P.O. Box 1450
Alexandria, Virginia 22313-1450
www.uspto.gov

WESTERMAN, HATTORI, DANIELS & ADRIAN, LLP
1250 CONNECTICUT AVENUE, NW
SUITE 700
WASHINGTON, DC 20036

Mail Date: 01/12/2011

Applicant	: Hiroshi Nakao	: DECISION ON REQUEST FOR
Patent Number	: 7629021	: RECALCULATION of PATENT
Issue Date	: 12/08/2009	: TERM ADJUSTMENT IN VIEW
Application No	: 11/258,355	: OF WYETH AND NOTICE OF INTENT TO
Filed	: 10/26/2005	: ISSUE CERTIFICATE OF CORRECTION
		:

The Request for Recalculation is **GRANTED** to the extent indicated.

The patent term adjustment has been determined to be **1009** days. The USPTO will *sua sponte* issue a certificate of correction reflecting the amount of PTA days determined by the recalculation.

Prior to the issuance of the certificate of correction, the USPTO will afford patentee an opportunity to be heard and request reconsideration. Accordingly, patentee has **one month or thirty (30) days**, whichever is longer, to file a request for reconsideration of this patent term adjustment calculation. See 35 U.S.C. 154(b)(3)(B)(ii) and 37 CFR 1.322(a)(4). No extensions of time will be granted under 37 CFR 1.136.

Patentee should use document code PET.OP if electronically filing a request for reconsideration of this patent term adjustment calculation. The patentee must also include the information required by 37 CFR 1.705(b)(2) and the fee required by 37 CFR 1.18(e). If patentee does not file a timely request for reconsideration of this patent term adjustment calculation including the information required by 37 CFR 1.705(b)(2) and the fee required by 37 CFR 1.18(e), the USPTO will issue a certificate of correction reflecting the PTA determination noted above.

Patentee should be aware that in order to preserve the right to review in the United States District Court for the District of Columbia of the USPTO patent term adjustment determination, patentee must ensure that he or she also take the steps required under 35 U.S.C. 154(b)(4)(A) in a timely manner. Nothing in the request for recalculation should be construed as providing an alternative time frame for commencing a civil action under 35 U.S.C. 154(b)(4)(A).

Any questions concerning this decision should be directed to the Office of Patent Legal Administration at 571-272-7702.

UNITED STATES PATENT AND TRADEMARK OFFICE

Commissioner for Patents
United States Patent and Trademark Office
P.O. Box 1450
Alexandria, VA 22313-1450
www.uspto.gov

TIMOTHY H. VAN DYKE
390 NO. ORANGE AVENUE
SUITE 2500
ORLANDO FL 32801

MAILED
MAR 01 2012
OFFICE OF PETITIONS

In re Application of	:	
Kimnobu Sugaya et al	:	
Application No. 11/258,401	:	DECISION GRANTING PETITION
Filed: October 24, 2005	:	UNDER 37 CFR 1.313(c)(2)
Attorney Docket No. 10669-005	:	

This is a decision on the petition under 37 CFR 1.313(c)(2), filed February 29, 2012, to withdraw the above-identified application from issue after payment of the issue fee.

The petition is **GRANTED**.

The above-identified application is withdrawn from issue for consideration of a submission under 37 CFR 1.114 (request for continued examination). *See* 37 CFR 1.313(c)(2).

Petitioner is advised that the issue fee paid on February 14, 2012 cannot be refunded. If, however, this application is again allowed, petitioner may request that it be applied towards the issue fee required by the new Notice of Allowance.[1]

Telephone inquiries should be directed to the undersigned at (571) 272-3208.

This application is being referred to Technology Center AU 1633 for processing of the request for continued examination under 37 CFR 1.114 and for consideration of the concurrently filed IDS.

/Karen Creasy/
Karen Creasy
Petitions Examiner
Office of Petitions

---

[1] *The request to apply the issue fee to the new Notice may be satisfied by completing and returning the new Part B – Fee(s) Transmittal Form (along with any balance due at the time of submission). Petitioner is advised that the Issue Fee Transmittal Form* ***must*** *be completed and timely submitted to avoid abandonment of the application.*

UNITED STATES PATENT AND TRADEMARK OFFICE

Commissioner for Patents
United States Patent and Trademark Office
P.O. Box 1450
Alexandria, VA 22313-1450
www.uspto.gov

WINSTON & STRAWN LLP
PATENT DEPARTMENT
1700 K STREET, N.W.
WASHINGTON, DC 20006

MAILED
MAR 02 2011
OFFICE OF PETITIONS

In re Application of
Alfred YOAKIM, et *al.*
Application No. 11/258,433
Filed: October 25, 2005
Attorney Docket No. **88265-7809**

DECISION GRANTING PETITION
UNDER 37 CFR 1.313(c)(2)

This is a decision on the petition under 37 CFR 1.313(c)(2), filed February 25, 2011, to withdraw the above-identified application from issue after payment of the issue fee.

The petition is **GRANTED**.

The above-identified application is withdrawn from issue for consideration of a submission under 37 CFR 1.114 (request for continued examination). *See* 37 CFR 1.313(c)(2).

Petitioner is advised that the issue fee paid on February 3, 2011 cannot be refunded. If, however, this application is again allowed, petitioner may request that it be applied towards the issue fee required by the new Notice of Allowance.[1]

Telephone inquiries should be directed to the undersigned at (571) 272-7253.

This application is being referred to Technology Center AU 1781 for processing of the request for continued examination under 37 CFR 1.114 and for consideration of the concurrently filed information disclosure statement.

/Monica A. Graves/
Petitions Examiner, Office of Petitions

---

[1] *The request to apply the issue fee to the new Notice may be satisfied by completing and returning the new Part B – Fee(s) Transmittal Form (along with any balance due at the time of submission). Petitioner is advised that the Issue Fee Transmittal Form* ***must*** *be completed and timely submitted to avoid abandonment of the application.*

UNITED STATES PATENT AND TRADEMARK OFFICE

Commissioner for Patents
United States Patent and Trademark Office
P.O. Box 1450
Alexandria, VA 22313-1450
www.uspto.gov

Paper No.

JOHNSON & ASSOCIATES
317A E. LIBERTY STREET
SAVANNAH GA 31401

MAILED

OCT 25 2010

OFFICE OF PETITIONS

In re Application of	:	
Ellis L. Kline	:	
Application Number: 11/258,548	:	ON APPLICATION FOR
Filing Date: 10/25/2005	:	PATENT TERM ADJUSTMENT
Attorney Docket Number:	:	
SCT-0102(13692.105064)	:	

This is in response to the REQUEST FOR RECONSIDERATION OF PATENT TERM ADJUSTMENT UNDER 37 C.F.R. §1.705(d), filed on July 6, 2010, which is treated as a petition under 37 CFR 1.705(b). Applicants request that the determination of patent term adjustment be increased from 125 days to 217 days. Applicants request this correction, in part, on the basis that the Office will take in excess of three years to issue this patent.

The request is **DISMISSED**.

To the extent the instant application for patent term adjustment requests reconsideration of the patent term adjustment as it relates to the Office's failure to issue the patent within 3 years of the filing date, the application for patent term adjustment under 37 CFR 1.705(b) is **DISMISSED as PREMATURE**.

Knowledge of the actual date the patent issues is required to calculate the amount, if any, of additional patent term patentee is entitled to for Office failure to issue the patent within 3 years. See § 1.702(b). (This is true even where a request for continued examination (RCE) was filed). The computer will not undertake the § 1.702(b) calculation until the actual date of issuance of the patent has been determined. Likewise, the computer will not calculate any further Office delay under § 1.702(a)(4) or applicant delay under § 1.704(c)(10) until the actual date of issuance of the patent has been determined. As such, the Office can not make a determination on the correctness of the patent term adjustment until the patent has issued.

Requesting reconsideration of the patent term adjustment to be indicated on the patent under 37 CFR 1.705(b) based on the initial determination of patent term adjustment and a projected issuance date of the patent (or even the filing date of the request for continued examination) is premature. Accordingly, it is appropriate to dismiss as premature such a request.

Rather than file an application for patent term adjustment under 37 CFR 1.705(b) contesting the 37 CFR 1.702(b) calculation at the time of the mailing of the notice of allowance, applicants are advised that they may wait until the time of the issuance of the patent and file a request for reconsideration of the patent term adjustment pursuant to 37 CFR 1.705(d). As the USPTO does not calculate the amount of time earned pursuant to 37 CFR 1.702(b) until the time of the issuance of the patent, the Office will consider any request for reconsideration of the patent term adjustment due to an error in the calculation of 37 CFR 1.702(b) to be timely if the request for reconsideration is filed within two months of the issuance of the patent. However, as to all other bases for contesting the initial determination of patent term adjustment received with the notice of allowance, applicant must timely file an application for patent term adjustment prior to the payment of the issue fee[1].

The Office acknowledges submission of the $200.00 fee set forth in 37 CFR 1.18(e). No additional fees are required.

Any request for reconsideration of the patent term adjustment indicated on the patent must be timely filed within 2 months after issuance pursuant to 37 CFR 1.705(d) and must include payment of the required fee under 37 CFR 1.18(e).

---

[1] For example, if applicant disputes both the calculation of patent term adjustment under 37 CFR 1.702(a)(1) for Office failure to mail a first Office action or notice of allowance not later than fourteen months after the date on which the application was filed and under 37 CFR 1.702(b) for Office failure to issue a patent within three years of the actual filing date of the application, then applicant must still timely file an application for patent term adjustment prior to the payment of the issue fee to contest the calculation of Office delay in issuing a first Office action or notice of allowance. See 37 CFR 1.705(b) and 35 U.S.C. 154(b)(3)(B). A dispute as to the calculation of the §1.702(a)(1) period raised on request for reconsideration of patent term adjustment under 37 CFR 1.705(d) will be dismissed as untimely filed.

To the extent that the instant application for patent term adjustment requests reconsideration of the PTA at the time of the mailing of the Notice of Allowance, the request is **DISMISSED.**

On April 14, 2010, the Office mailed a Determination of Patent Term Adjustment under 35 U.S.C. 154(b) in the above-identified application. Applicant was advised that the patent term adjustment to date was 125 days (315 days of PTO delay and 190 days of applicant delay).

The instant application for patent term adjustment was timely filed.[2]

Applicants assert that the period of reduction in connection with the filing of a reply, in response to the Office action mailed on September 2, 2008, should be 50 days, rather than 55 days as calculated by the Office.

Applicants are incorrect. 37 CFR 1.704(b) states that with respect to the grounds for adjustment set forth in §§ 1.702(a) through (e), and in particular the ground of adjustment set forth in § 1.702(b), an applicant shall be deemed to have failed to engage in reasonable efforts to conclude processing or examination of an application for the cumulative total of any periods of time in excess of three months that are taken to reply to any notice or action by the Office making any rejection, objection, argument, or other request, measuring such three-month period from the date the notice or action was mailed or given to the applicant, in which case the period of adjustment set forth in § 1.703 shall be reduced by the number of days, if any, beginning on the day after the date that is three months after the date of mailing or transmission of the Office communication notifying the applicant of the rejection, objection, argument, or other request and ending on the date the reply was filed.

Further, § 1.704(f) states, in pertinent part, that the term of a patent entitled to adjustment under § 1.702 and this section shall be adjusted for the sum of the periods calculated under paragraphs (a) through (e) of this section, to the extent that such periods are not overlapping, less the sum of the periods

[2] PALM Records indicate that the issue fee was paid on July 6, 2010.

calculated under § 1.704. *The date indicated on any certificate of mailing or transmission under § 1.8 shall not be taken into account in this calculation.*

(emphasis added)

On September 2, 2008, a final Office action was mailed. On January 26, 2009, four months and 55 days after the day after the date the final Office action was mailed, applicants filed a reply. The reply contained a certificate of mailing dated January 21, 2009. However, as stated in 37 CFR 1.704(f), above, the date indicated on any certificate of mailing or transmission under § 1.8 shall not be taken into account in this calculation. Accordingly, the period of applicant delay is 55 days, not 50 days.

In view thereof, no change will be made in the patent term adjustment determination at the time of the mailing of the notice of allowance.

The application is being forwarded to the Office of Data Management for issuance of the patent. The patent term adjustment indicated on the patent (as shown on the Issue Notification mailed about three weeks prior to patent issuance) will include any additional adjustment accrued both for Office delay in issuing the patent more than four months after payment of the issue fee and satisfaction of all outstanding requirements, and for the Office taking in excess of three years to issue the patent (to the extent that the three-year period does not overlap with periods already accorded).

Telephone inquiries specific to this decision should be directed to Senior Petitions Attorney Douglas I. Wood at (571) 272-3231.

Anthony Knight
Director
Office of Petitions

UNITED STATES PATENT AND TRADEMARK OFFICE

Commissioner for Patents
United States Patent and Trademark Office
P.O. Box 1450
Alexandria, VA 22313-1450
www.uspto.gov

KATTEN MUCHIN ROSENMAN LLP
(C/O PATENT ADMINISTRATOR)
2900 K STREET NW, SUITE 200
WASHINGTON, DC 20007-5118

MAILED

JAN 18 2011

OFFICE OF PETITIONS

In re Application of	:	
Allan Foreman et al.	:	
Application No. 11/258,598	:	DECISION ON PETITION
Filed: October 25, 2005	:	TO WITHDRAW
Attorney Docket No.: 134848.00331	:	FROM RECORD
	:	

This is a decision on the Request to Withdraw as attorney or agent of record under 37 C.F.R. § 1.36(b), filed December 6, 2010.

The request is **NOT APPROVED**.

A grantable request to withdraw as attorney/agent of record must be signed by every attorney/agent seeking to withdraw or contain a clear indication that one attorney is signing on behalf of another/others.

The request is filed by Sarah Rouse Janosik on behalf of the practitioners of record associated with Customer Number 27160.

The Office no longer accepts an address change to the new practitioner identified in the request, absent the filing of a power of attorney to the new representative. The Office will, however, change the correspondence address of record to the most current address provided for (1) the intervening assignee of the entire interest or (2) the first named inventor.

The request to withdraw from record cannot be approved at this time, since a correspondence address provided is not the intervening assignee of the entire interest or the first named inventor.

All future communications from the Office will continue to be directed to the above-listed address until otherwise notified by applicant.

Telephone inquiries concerning this decision should be directed to undersigned at 571-272-3210. All other inquiries concerning the examination or status of this application should be directed to the Technology Center.

Irvin Dingle
Petitions Examiner
Office of Petitions

UNITED STATES PATENT AND TRADEMARK OFFICE

Commissioner for Patents
United States Patent and Trademark Office
P.O. Box 1450
Alexandria, VA 22313-1450
www.uspto.gov

KATTEN MUCHIN ROSENMAN LLP
(C/O PATENT ADMINISTRATOR)
2900 K STREET NW, SUITE 200
WASHINGTON, DC 20007-5118

MAILED

FEB 22 2011

OFFICE OF PETITIONS

In re Application of	:	
Allan Foreman et al	:	
Application No. 11/258,598	:	DECISION ON PETITION
Filed: October 25, 2005	:	TO WITHDRAW
Attorney Docket No. 134848.00331	:	FROM RECORD
	:	

This is a decision on the Request to Withdraw as attorney or agent of record under 37 C.F.R. § 1.36(b), filed January 28, 2011.

The request is **APPROVED**.

The request was signed by Sarah Rouse Janosik on behalf of the practitioners of record associated with Customer Number 27160.

Applicant is reminded that there is no attorney of record at this time.

All future correspondence will be directed to assignee Aduro Biotech at the address indicated below.

Telephone inquiries concerning this decision should be directed to Irvin Dingle at (571) 272-3210.

Irvin Dingle
Petitions Examiner
Office of Petitions

cc: Aduro Biotech
626 Bancroft Way, Suite 3-C
Berkeley, CA 94710

UNITED STATES PATENT AND TRADEMARK OFFICE

UNITED STATES DEPARTMENT OF COMMERCE
United States Patent and Trademark Office
Address: COMMISSIONER FOR PATENTS
P.O. Box 1450
Alexandria, Virginia 22313-1450
www.uspto.gov

APPLICATION NUMBER	FILING OR 371(C) DATE	FIRST NAMED APPLICANT	ATTY. DOCKET NO./TITLE
11/258,598	10/25/2005	Allan Foreman	134848.00331

CONFIRMATION NO. 1172

POWER OF ATTORNEY NOTICE

27160
KATTEN MUCHIN ROSENMAN LLP
(C/O PATENT ADMINISTRATOR)
2900 K STREET NW, SUITE 200
WASHINGTON, DC 20007-5118

OC000000046025389

Date Mailed: 02/22/2011

NOTICE REGARDING CHANGE OF POWER OF ATTORNEY

This is in response to the Power of Attorney filed 01/28/2011.

- The withdrawal as attorney in this application has been accepted. Future correspondence will be mailed to the new address of record. 37 CFR 1.33.

/idingle/

Office of Data Management, Application Assistance Unit (571) 272-4000, or (571) 272-4200, or 1-888-786-0101

UNITED STATES PATENT AND TRADEMARK OFFICE

UNITED STATES DEPARTMENT OF COMMERCE
United States Patent and Trademark Office
Address: COMMISSIONER FOR PATENTS
P.O. Box 1450
Alexandria, Virginia 22313-1450
www.uspto.gov

APPLICATION NUMBER	FILING OR 371(C) DATE	FIRST NAMED APPLICANT	ATTY. DOCKET NO./TITLE
11/258,598	10/25/2005	Allan Foreman	134848.00331

CONFIRMATION NO. 1172

POA ACCEPTANCE LETTER

Aduro Biotech
626 Bancroft Way, Suite 3-C
Berkeley, CA 94710

OC000000046025622

Date Mailed: 02/22/2011

NOTICE OF ACCEPTANCE OF POWER OF ATTORNEY

This is in response to the Power of Attorney filed 01/28/2011.

The Power of Attorney in this application is accepted. Correspondence in this application will be mailed to the above address as provided by 37 CFR 1.33.

/idingle/

Office of Data Management, Application Assistance Unit (571) 272-4000, or (571) 272-4200, or 1-888-786-0101

UNITED STATES PATENT AND TRADEMARK OFFICE

Commissioner for Patents
United States Patent and Trademark Office
P.O. Box 1450
Alexandria, VA 22313-1450
www.uspto.gov

MAILED
SEP 06 2011
OFFICE OF PETITIONS

FOLEY & LARDNER LLP
111 HUNTINGTON AVENUE
26TH FLOOR
BOSTON MA 02199-7610

In re Application of	:	
Frost, et al.	:	
Application No. 11/258,611	:	ON PETITION
Filed: October 25, 2005	:	
Attorney Docket No. 099011-0474	:	

This is in response to the petition to revive an unintentionally abandoned application under 37 CFR 1.137(b), filed June 3, 2011.

The petition under 37 CFR 1.137(b) is **GRANTED**.

The above-identified application became abandoned for failure to timely file an Appeal Brief. The Office mailed a Notice of Panel Decision from Pre-Appeal Brief Review on November 22, 2010, which set an extendable period for reply of two months for applicants to file an Appeal Brief. No Appeal Brief having been filed, the application became abandoned on January 23, 2011. The Office mailed a Notice of Abandonment on May 31, 2011.

With the instant petition, petitioner paid the petition fee, made the proper statement of unintentional delay, and submitted the required reply in the form of a Request for Continued Examination.

The application is being forwarded to Group Art Unit 2447 for consideration of the RCE, filed June 3, 2011.

Telephone inquiries concerning this decision may be directed to the undersigned at 571-272-3207.

Cliff Congo
Petitions Attorney
Office of Petitions

UNITED STATES PATENT AND TRADEMARK OFFICE

Commissioner for Patents
United States Patent and Trademark Office
P.O. Box 1450
Alexandria, VA 22313-1450
www.uspto.gov

HEWLETT-PACKARD COMPANY
INTELLECTUAL PROPERTY ADMINISTRATION
3404 E. HARMONY ROAD
MAIL STOP 35
FORT COLLINS CO 80528

MAILED

AUG 24 2010

OFFICE OF PETITIONS

In re Application of	:	
Christopher G. Malone et al.	:	
Application No. 11/258,626	:	DECISION ON PETITION
Filed: October 25, 2005	:	
Attorney Docket No. **200400218-1**	:	

This is a decision on the petition under the unintentional provisions of 37 CFR 1.137(b), filed July 14, 2009, to revive the above-identified application. The current decision is a corrected version of the decision mailed previously on December 08, 2009. The Office regrets the error.

The petition is **GRANTED**.

The application became abandoned for failure to reply in a timely manner to the non-final Office action mailed, November 21, 2008, which set a shortened statutory period for reply of three (3) months. No extensions of time under the provisions of 37 CFR 1.136(a) were obtained. Accordingly, the application became abandoned on February 22, 2009.

The petition satisfies the requirements of 37 CFR 1.137(b) in that petitioner has supplied (1) the reply in the form of an amendment, (2) the petition fee of $1620, and (3) a proper statement of unintentional delay. Accordingly, the reply to the non-final Office action of November 21, 2008 is accepted as having been unintentionally delayed.

Telephone inquiries concerning this decision should be directed to Tredelle Jackson at (571) 272-2783.

This application is being referred to Technology Center AU 2835 for appropriate action on the concurrently filed amendment.

Ramesh Krishnamurthy

Ramesh Krishnamurthy
Petitions Examiner
Office of Petitions

UNITED STATES PATENT AND TRADEMARK OFFICE

Commissioner for Patents
United States Patent and Trademark Office
P.O. Box 1450
Alexandria, VA 22313-1450
www.uspto.gov

Date: 05/13/11

Patent No. : **7,882,617 B2**
Ser. No. : **11/258,656**
Inventor(s) : **Kato , et al.**
Issued : **February 8, 2011**
Title : Method of fabricating a magnetic recording head for perpendicular recording with enhanced covering power
Docket No. : **90002-60002**

Re: Request for Certificate of Correction

Consideration has been given your request for the issuance of a certificate of correction for the above-identified patent under the provisions of Rule(s) 1.322 and/or 1.323.

Assignees' names and addresses (assignment data) printed in a patent, are based *solely* on information supplied in the appropriate space for identifying the assignment data, i.e., item 3 of the Issue Fee Transmittal Form PTOL-85B. Granting of a request under 37 CFR 3.81(b) is required to correct applicant's error providing ***incorrect or erroneous*** assignment data, *before* issuance of a Certificate of Correction, under 37 CFR 1.323 *(see Manual of Patent Examining Procedures (M.P.E.P) Chp.1400, sect. 1481).* This procedure is required *at any time after the issue fee is paid*, including after issuance of the patent.

In view of the foregoing, your request, in this mater, is hereby denied.

A request to correct the Assignee under 37 CFR 3.81(b) should include:

A. **the processing fee set forth in 37 CFR 1.17(i) (currently $130);**
B. a statement that the failure to include the correct assignee name on the PTOL-85B was inadvertent; and
C. a copy of the Notice of Recordation of Assignment Document, reflecting the reel and frame number where the assignment(s) is recorded and/or reflecting proof of *the date* the assignment was submitted for recordation.

In the Request, Applicant(s) may request that the file be forwarded to Certificates of Correction Branch, for issuance of a Certificate of Correction, if the Request is granted.

Any request under 37 CFR 3.81(b) should be directed to the following address or facsimile number:

By mail: Mail Stop PETITIONS

Commissioner for Patents
Post Office Box 1450
Alexandria, VA 22313-1450

By hand: Customer Service Window
Mail Stop Petitions
Randolph Building
401 Dulany Street
Alexandria, VA 22314

By fax: (571) 273-0025
ATTN: Office of Petitions

If a fee (currently $100) was previously submitted for consideration of a Request for Certificate of Correction, under CFR 1.323, to correct assignment data, no additional fee is required.

Lamonte M. Newsome

Lamonte M. Newsome
For Mary Diggs, Supervisor
Decisions & Certificates
Of Correction Branch
(571) 272-3421 or (703) 305-8309

GMG Intellectual Property Law
378 Cambridge Avenue, Suite N
Palo Alto CA 94303

LMN

UNITED STATES PATENT AND TRADEMARK OFFICE

Commissioner for Patents
United States Patent and Trademark Office
P.O. Box 1450
Alexandria, VA 22313-1450
www.uspto.gov

Ballard Spahr LLP
SUITE 1000
999 PEACHTREE STREET
ATLANTA GA 30309-3915

MAILED

SEP 30 2010

OFFICE OF PETITIONS

In re Application of	:	
Hae-Soo Kwak, et al.	:	
Application No. 11/258,750	:	DECISION ON PETITION
Filed: October 26, 2005	:	
Attorney Docket No. 01321.000U1	:	

This is a decision on the petition, filed August 3, 2010, which is being treated as a petition under 37 CFR 1.181 (no fee) requesting withdrawal of the holding of abandonment in the above-identified application.

The petition is **DISMISSED**.

Any request for reconsideration of this decision should be filed within two (2) months from the mail date of this decision. *Note* 37 CFR 1.181(f). The request for reconsideration should include a cover letter and be entitled as a "Renewed Petition under 37 CFR 1.181 to Withdraw the Holding of Abandonment."

This application was held abandoned for failure to reply to the Notice of Non-Compliant Amendment mailed December 16, 2009, which set a one (1) month shortened statutory period for reply. A Notice of Abandonment was mailed on July 6, 2010.

Petitioner asserts that the Notice dated December 16, 2009, was not received.

A review of the written record indicates no irregularity in the mailing of the Office action, and, in the absence of any irregularity, there is a strong presumption that the Office action was properly mailed to the practitioner at the address of record. This presumption may be overcome by a showing that the Office action was not in fact received.

The showing required to establish nonreceipt of an Office communication must include:

(1) a statement from the practitioner describing the system used for recording an Office action received at the correspondence address of record with the USPTO. The statement should establish that the docketing system is sufficiently reliable. It is expected that the record would

include, but not be limited to, the application number, attorney docket number, the mail date of the Office action and the due date for the response.

(2) Practitioner must state that the Office action was not received at the correspondence address of record, and that a search of the practitioner's record(s), including any file jacket or the equivalent, and the application contents, indicates that the Office action was not received.

(3) A copy of the record(s) used by the practitioner where the non-received Office action would have been entered had it been received is required. A copy of the practitioner's record(s) required to show non-receipt of the Office action should include the master docket for the firm. That is, if a three month period for reply was set in the nonreceived Office action, a copy of the master docket report showing all replies docketed for a date three months from the mail date of the nonreceived Office action must be submitted as documentary proof of nonreceipt of the Office action. If no such master docket exists, the practitioner should so state and provide other evidence such as, but not limited to, the following: the application file jacket; incoming mail log; calendar; reminder system; or the individual docket record for the application in question. See MPEP §711.03(c)(I)(A).

See MPEP § 711.03(c) under subheading "Petition to Withdraw Holding of Abandonment Based on Failure to Receive Office Action," and "Withdrawing the Holding of Abandonment When Office Actions Are Not Received," 1156 Official Gazette 53 (November 16, 1993).

The petition fails to satisfy item (3) of the above-stated requirements in that the instant petition lacks a copy of the master docket report showing all replies docketed for a date three months from the mail date of the nonreceived Office action.

Accordingly, absent the required evidence to establish nonreceipt of the Notice of December 16, 2009, the petition requesting withdrawal of the holding of abandonment cannot be granted at this time.

If petitioner cannot supply the evidence necessary to withdraw the holding of abandonment, or simply does not wish to, petitioner should consider filing a petition under 37 CFR 1.137(b) stating that the delay was unintentional. Public Law 97-247, § 3, 96 Stat. 317 (1982), which revised patent and trademark fees, amended 35 U.S.C. § 41(a)(7) to provide for the revival of an "unintentionally" abandoned application without a showing that the delay in prosecution or in late payment of the issue fee was "unavoidable." This amendment to 35 U.S.C. § 41(a)(7) has been implemented in 37 CFR 1.137(b). An "unintentional" petition under 37 CFR 1.137(b) must be accompanied by the $810 petition fee.

The filing of a petition under 37 CFR 1.137(b) cannot be intentionally delayed and therefore must be filed promptly. A person seeking revival due to unintentional delay cannot make a statement that the delay was unintentional unless the entire delay, including the date it was discovered that the application was abandoned until the filing of the petition to revive under 37 CFR 1.137(b), was unintentional. A statement that the delay was unintentional is not appropriate if petitioner intentionally delayed the filing of a petition for revival under 37 CFR 1.137(b).

Further correspondence with respect to this matter should be addressed as follows:

By Mail: Mail Stop PETITION
Commissioner for Patents
P. O. Box 1450
Alexandria, VA 22313-1450

By hand: U. S. Patent and Trademark Office
Customer Service Window, Mail Stop Petitions
Randolph Building
401 Dulany Street
Alexandria, VA 22314

By facsimile: **(571) 273-8300**
Attn: Office of Petitions

Telephone inquiries concerning this decision should be directed to Terri Johnson at (571) 272-2991.

/Ramesh Krishnamurthy/
Ramesh Krishnamurthy
Petitions Examiner
Office of Petitions

UNITED STATES PATENT AND TRADEMARK OFFICE

Commissioner for Patents
United States Patent and Trademark Office
P.O. Box 1450
Alexandria, VA 22313-1450
www.uspto.gov

Ballard Spahr LLP
SUITE 1000
999 PEACHTREE STREET
ATLANTA GA 30309-3915

MAILED
NOV 22 2010
OFFICE OF PETITIONS

In re Application of	:	
Hae-Soo Kwak, et al.	:	
Application No. 11/258,750	:	DECISION ON PETITION
Filed: October 26, 2005	:	
Attorney Docket No. 01321.0001U1	:	

This is a decision on the renewed petition, filed October 18, 2010, which is being treated as a petition under 37 CFR 1.181 (no fee) requesting withdrawal of the holding of abandonment in the above-identified application.

The petition is **GRANTED**.

This application was held abandoned for failure to reply to the Notice of Non-Compliant Amendment mailed December 16, 2009, which set a one (1) month shortened statutory period for reply. A Notice of Abandonment was mailed on July 6, 2010.

Petitioner asserts that the Notice dated December 16, 2009 was not received.

A review of the written record indicates no irregularity in the mailing of the Office action, and, in the absence of any irregularity, there is a strong presumption that the Office action was properly mailed to the practitioner at the address of record. This presumption may be overcome by a showing that the Office action was not in fact received.

The showing required to establish nonreceipt of an Office communication must include:

(1) a statement from the practitioner describing the system used for recording an Office action received at the correspondence address of record with the USPTO. The statement should establish that the docketing system is sufficiently reliable. It is expected that the record would include, but not be limited to, the application number, attorney docket number, the mail date of the Office action and the due date for the response.

(2) Practitioner must state that the Office action was not received at the correspondence address of record, and that a search of the practitioner's record(s), including any file jacket or the equivalent, and the application contents, indicates that the Office action was not received.

(3) A copy of the record(s) used by the practitioner where the non-received Office action would have been entered had it been received is required. A copy of the practitioner's record(s) required to show non-receipt of the Office action should include the master docket for the firm. That is, if a three month period for reply was set in the nonreceived Office action, a copy of the master docket report showing all replies docketed for a date three months from the mail date of the nonreceived Office action must be submitted as documentary proof of nonreceipt of the Office action. If no such master docket exists, the practitioner should so state and provide other evidence such as, but not limited to, the following: the application file jacket; incoming mail log; calendar; reminder system; or the individual docket record for the application in question. See MPEP §711.03(c)(I)(A).

The petition satisfies the above-stated requirements. Accordingly, the application was not abandoned in fact.

In view of the above, the Notice of Abandonment is hereby vacated and the holding of abandonment withdrawn.

This application is being referred to the Technology Center Art Unit 1781 for consideration of the amendment filed August 3, 2010.

/Ramesh Krishnamurthy/
Ramesh Krishnamurthy
Petitions Examiner
Office of Petitions

UNITED STATES PATENT AND TRADEMARK OFFICE

Commissioner for Patents
United States Patent and Trademark Office
P.O. Box 1450
Alexandria, VA 22313-1450
www.uspto.gov

E I DU PONT DE NEMOURS AND COMPANY
LEGAL PATENT RECORDS CENTER
BARLEY MILL PLAZA 25/1122B
4417 LANCASTER PIKE
WILMINGTON, DE 19805

MAILED

DEC 21 2010

OFFICE OF PETITIONS

In re Application of :
Loic Pierre Rolland, et al. :
Application No. 11/258,779 : DECISION ON PETITION
Filed: October 26, 2005 :
Attorney Docket No. AD7205USNA :

This is a decision on the petition under the unintentional provisions of 37 CFR 1.137(b), filed November 2, 2010, to revive the above-identified application.

The application became abandoned for failure to reply in a timely manner to the non-final Office action mailed, April 9, 2010, which set a shortened statutory period for reply of three (3) months. No extensions of time under the provisions of 37 CFR 1.136(a) were obtained. Accordingly, the application became abandoned on July 10, 2010.

The petition satisfies the requirements of 37 CFR 1.137(b) in that petitioner has supplied (1) the reply in the form of an amendment, (2) the petition fee of $1620, and (3) a proper statement of unintentional delay.

In view of the above, the petition is **GRANTED**.

Telephone inquiries concerning this decision should be directed to undersigned at (571) 272-1642. All other inquiries concerning the examination or status of this application should be directed to the Technology Center.

This application is being referred to Technology Center AU 1787 for appropriate action by the Examiner in the normal course of business on the reply received November 2, 2010.

/AMW/
April M. Wise
Petitions Examiner
Office of Petitions

UNITED STATES PATENT AND TRADEMARK OFFICE

Commissioner for Patents
United States Patent and Trademark Office
P.O. Box 1450
Alexandria, VA 22313-1450
www.uspto.gov

MAILED

FEB 15 2011

OFFICE OF PETITIONS

PAUL D. YASGER
ABBOTT LABORATORIES
100 ABBOTT PARK ROAD
DEPT. 377/AP6A
ABBOTT PARK IL 60064-6008

In re Application of	:	
GOMTSYAN, et al	:	
Application No. 11/258,980	:	DECISION ON PETITION
Filed: October 26, 2005	:	
Attorney Docket No. 7077USD1	:	

This is a decision on the petition under the unintentional provisions of 37 CFR 1.137(b), filed May 3, 2010, to revive the above-identified application.

The petition is **GRANTED**.

The application became abandoned for failure to reply in a timely manner to the non-final Office action mailed, April 15, 2009, which set a shortened statutory period for reply of three (3) months. No extensions of time under the provisions of 37 CFR 1.136(a) were obtained. Accordingly, the application became abandoned on July 16, 2009.

The petition satisfies the requirements of 37 CFR 1.137(b) in that petitioner has supplied (1) the reply in the form of an amendment, (2) the petition fee of $1620; and (3) a statement of unintentional delay.

It is not apparent whether the person signing the statement of unintentional delay was in a position to have firsthand or direct knowledge of the facts and circumstances of the delay at issue. Nevertheless, such statement is being treated as having been made as the result of a reasonable inquiry into the facts and circumstances of such delay.. See 37 CFR 10.18(b) and Changes to Patent Practice and Procedure; Final Rule Notice, 62 Fed. Reg. 53131, 53178 (October 10, 1997), 1203 Off. Gaz. Pat. Office 63, 103 (October 21, 1997). In the event that such an inquiry has not been made, petitioner must make such an inquiry. If such inquiry results in the discovery that it is not correct that the entire delay in filing the required reply from the due date for the reply until the filing of a grantable petition pursuant to 37 CFR 1.137(b) was unintentional, petitioner must notify the Office.

There is no indication that the person signing the petition was ever given a power of attorney to prosecute the application. If the person signing the petition desires to receive future correspondence regarding this application, the appropriate power of attorney document must be submitted.

An extension of time under 37 CFR 1.136 must be filed prior to the expiration of the maximum extendable period for reply. *See* In re Application of S., 8 USPQ2d 1630, 1631 (Comm'r Pats. 1988).

Since the $1110 extension of time fee submitted with the petition on May 3, 2010, was subsequent to the maximum extendable period for reply, this fee is unnecessary and will be credited to petitioner's Deposit Account No. 50-1662.

Telephone inquiries concerning this decision should be directed to the undersigned at (571) 272-6735.

This application is being referred to Technology Center AU 1625 for appropriate action by the Examiner in the normal course of business.

/Diane C. Goodwyn/
Diane C. Goodwyn
Petitions Examiner
Office of Petitions

UNITED STATES PATENT AND TRADEMARK OFFICE

UNITED STATES DEPARTMENT OF COMMERCE
United States Patent and Trademark Office
Address: COMMISSIONER FOR PATENTS
P.O. Box 1450
Alexandria, Virginia 22313-1450
www.uspto.gov

APPLICATION NO.	FILING DATE	FIRST NAMED INVENTOR	ATTORNEY DOCKET NO.	CONFIRMATION NO.
11/258,996	10/27/2005	Fanglin Zou	1166-0143PUS1	3621

7590 10/27/2010
BIRCH STEWART KOLASCH & BIRCH
PO BOX 747
FALLS CHURCH, VA 22040-0747

EXAMINER
JUNG, UNSU

ART UNIT	PAPER NUMBER
1641	

NOTIFICATION DATE	DELIVERY MODE
10/27/2010	ELECTRONIC

ACKNOWLEDGEMENT OF REQUEST

Notice of Allowance/Allowability Mailed

The request to print a color drawing reference as the first paragraph in the portion of the specification containing a brief description of the drawings as required by 37 CFR 1.84 and MPEP § 608.02 has been received by the United States Patent and Trademark Office and will be entered into the specification.

571-272-4200 or 1-888-786-0101
Application Assistance Unit
Office of Data Management

FORM PTOM327-5 (Rev. 02/08)

UNITED STATES PATENT AND TRADEMARK OFFICE

Commissioner for Patents
United States Patent and Trademark Office
P.O. Box 1450
Alexandria, VA 22313-1450
www.uspto.gov

October 25, 2010

BIRCH STEWART KOLASCH & BIRCH
PO BOX 747
FALLS CHURCH VA 22040-0747

In re Application of	:	
Zou Fanglin, et al	:	**DECISION ON PETITION**
Application No. 11258996	:	
Filed: 10/27/2005	:	***ACCEPTANCE OF COLOR***
Attorney Docket No. **1166-0143PUS1**	:	***DRAWINGS***

This is a decision on the Petition to Accept Color Drawings under 37 C.F.R 1.84 (a) (2), received in the United States Patent and Trademark Office (USPTO) October 27, 2005.

The petition is **GRANTED**.

A grantable petition under 37 C.F.R. 1.84(a) (2) must be accompanied by the following.

1. The fee set forth under 37 C.F.R. 1.17(h),
2. Three (3) sets of the color drawings in question, or (1) set if filed via EFS, and
3. The specification containing the following language as the first paragraph in that portion of the specification relating to the brief description of the drawings.

   "The file of this patent contains at least one drawing executed in color. Copies of this patent with color drawing(s) will be provided by the Patent and Trademark Office upon request and payment of the necessary fee."

The petition was accompanied by all of the required fees and drawings. The specification contains the appropriate language. Therefore, the petition is GRANTED.

Telephone inquires relating to this decision may be directed to the undersigned in the Office of Data Management at 571-272-4200.

/Kimberly Terrell/
Manager
Office of Data Management
Publications Branch

UNITED STATES PATENT AND TRADEMARK OFFICE

Commissioner for Patents
United States Patent and Trademark Office
P.O. Box 1450
Alexandria, VA 22313-1450
www.uspto.gov

Decision Date : May 24,2011

In re Application of :

Yerramilli Murthy

Application No : 11259027

Filed : 27-Oct-2005

Attorney Docket No : 027585-000101US

DECISION ON REQUEST TO WITHDRAW AS ATTORNEY/AGENTOF RECORD

This is an electronic decision on the Request to Withdraw as attorney or agent of record under 37 CFR § 1.36(b), filed May 24,2011

The request is **APPROVED.**

The request was signed by William B. Kezer (registration no. 37369) on behalf of all attorneys/agents associated with Customer Number 20350 . All attorneys/agents associated with Cusotmer Number 20350 have been withdrawn.

Since there are no remaining attorneys of record, all future communications from the Office will be directed to the first named inventor or assignee that has properly made itself of record pursuant to 37 CFR 3.71, with correspondence address:

Name	IDEXX Laboratories, Inc.
Name2	
Address 1	One IDEXX Drive
Address 2	
City	Westbrook
State	ME
Postal Code	04092
Country	US

As a reminder, requester is required to inform the first named inventor or assignee that has properly made itself of record pursuant to 37 CFR 3.71 of the electronically processed petition.

Telephone inquiries concerning this decision should be directed to the Patent Electronic Business Center (EBC) at 866-217-9197.

Office of Petitions

Doc Code: PET.AUTO **Document Description: Petition automatically granted by EFS-Web**	PTO/SB/83 U.S. Patent and Trademark Office Department of Commerce

Electronic Petition Request	**REQUEST FOR WITHDRAWAL AS ATTORNEY OR AGENT AND CHANGE OF CORRESPONDENCE ADDRESS**
Application Number	11259027
Filing Date	27-Oct-2005
First Named Inventor	Yerramilli Murthy
Art Unit	1611
Examiner Name	RACHAEL WELTER
Attorney Docket Number	027585-000101US
Title	Compositions for controlled delivery of pharmaceutically active compounds

◉ Please withdraw me as attorney or agent for the above identified patent application and the practitioners of record associated with Customer Number: 20350

The reason(s) for this request are those described in 37 CFR:

10.40(b)(4)

Certifications

☒ I/We have given reasonable notice to the client, prior to the expiration of the response period, that the practitioner(s) intend to withdraw from employment

☒ I/We have delivered to the client or a duly authorized representative of the client all papers and property (including funds) to which the client is entitled

☒ I/We have notified the client of any responses that may be due and the time frame within which the client must respond

Change the correspondence address and direct all future correspondence to the first named inventor or assignee that has properly made itself of record pursuant to 37 CFR 3.71:

Name	IDEXX Laboratories, Inc.
Address	One IDEXX Drive
City	Westbrook
State	ME
Postal Code	04092
Country	US

I am authorized to sign on behalf of myself and all withdrawing practitioners.	
Signature	/William B. Kezer/
Name	William B. Kezer
Registration Number	37369

UNITED STATES PATENT AND TRADEMARK OFFICE

UNITED STATES DEPARTMENT OF COMMERCE
United States Patent and Trademark Office
Address: COMMISSIONER FOR PATENTS
P.O. Box 1450
Alexandria, Virginia 22313-1450
www.uspto.gov

DICKSTEIN SHAPIRO LLP
1825 EYE STREET NW
Washington, DC 20006-5403

Mail Date: 08/04/2010

Applicant	: Yuichi Kadokawa	: DECISION ON REQUEST FOR
Patent Number	: 7652966	: RECALCULATION of PATENT
Issue Date	: 01/26/2010	: TERM ADJUSTMENT IN VIEW
Application No	: 11/259,274	: OF WYETH AND NOTICE OF INTENT TO
Filed	: 10/27/2005	: ISSUE CERTIFICATE OF CORRECTION
		:

The Request for Recalculation is **GRANTED** to the extent indicated.

The patent term adjustment has been determined to be **917** days. The USPTO will *sua sponte* issue a certificate of correction reflecting the amount of PTA days determined by the recalculation.

Prior to the issuance of the certificate of correction, the USPTO will afford patentee an opportunity to be heard and request reconsideration. Accordingly, patentee has **one month or thirty (30) days**, whichever is longer, to file a request for reconsideration of this patent term adjustment calculation. See 35 U.S.C. 154(b)(3)(B)(ii) and 37 CFR 1.322(a)(4). No extensions of time will be granted under 37 CFR 1.136.

Patentee should use document code PET.OP if electronically filing a request for reconsideration of this patent term adjustment calculation. The patentee must also include the information required by 37 CFR 1.705(b)(2) and the fee required by 37 CFR 1.18(e). If patentee does not file a timely request for reconsideration of this patent term adjustment calculation including the information required by 37 CFR 1.705(b)(2) and the fee required by 37 CFR 1.18(e), the USPTO will issue a certificate of correction reflecting the PTA determination noted above.

Patentee should be aware that in order to preserve the right to review in the United States District Court for the District of Columbia of the USPTO patent term adjustment determination, patentee must ensure that he or she also take the steps required under 35 U.S.C. 154(b)(4)(A) in a timely manner. Nothing in the request for recalculation should be construed as providing an alternative time frame for commencing a civil action under 35 U.S.C. 154(b)(4)(A).

Any questions concerning this decision should be directed to the Office of Patent Legal Administration at 571-272-7702.

UNITED STATES PATENT AND TRADEMARK OFFICE

Commissioner for Patents
United States Patent and Trademark Office
P.O. Box 1450
Alexandria, VA 22313-1450
www.uspto.gov

MILLEN WHITE ZELANO & BRANIGAN, P.C.
2200 CLARENDON BLVD.
SUITE 1400
ARLINGTON, VA 22201

MAILED

SEP 13 2010

OFFICE OF PETITIONS

In re Application of :
D.M. Watterson et al :
Application No. 11/259,522 :
Filed: October 26, 2005 :
Attorney Docket No. WARATAH-4-C01

ON PETITION

This is a decision on the petition, filed September 10, 2010 under 37 CFR 1.313(c)(2) to withdraw the above-identified application from issue after payment of the issue fee.

The petition is **GRANTED**.

The above-identified application is withdrawn from issue for consideration of a submission under 37 CFR 1.114 (request for continued examination). See 37 CFR 1.313(c)(2).

Petitioner is advised that the issue fee paid on July 6, 2010 in the above-identified application cannot be refunded. If, however, the above-identified application is again allowed, petitioner may request that it be applied towards the issue fee required by the new Notice of Allowance.[1]

Telephone inquiries should be directed to Irvin Dingle at (571) 272-3210.

This matter is being referred to Technology Center AU 1626 for processing of the request for continued examination under 37 CFR 1.114 and for consideration of the concurrently filed Information Disclosure Statement.

/Irvin Dingle/
Irvin Dingle
Petitions Examiner
Office of Petitions

---

[1] The request to apply the issue fee to the new Notice may be satisfied by completing and returning the new Issue Fee Transmittal Form PTOL-85(b), which includes the following language thereon: Commissioner for Patents is requested to apply the Issue Fee and Publication Fee (if any) or re-apply any previously paid issue fee to the application identified above. Petitioner is advised that, whether a fee is indicated as being due or not, the Issue Fee Transmittal Form **must** be completed and timely submitted to avoid abandonment. Note the language in bold text on the first page of the Notice of Allowance and Fee(s) Due (PTOL-85).

UNITED STATES PATENT AND TRADEMARK OFFICE

Commissioner for Patents
United States Patent and Trademark Office
P.O. Box 1450
Alexandria, VA 22313-1450
www.uspto.gov

MCDERMOTT WILL & EMERY LLP
600 13th Street, NW
Washington DC 20005-3096

MAILED
MAR 13 2012
OFFICE OF PETITIONS

In re Patent No. 8,065,475
Issue Date: November 22, 2011
Application No. 11/259,539
Filed: October 25, 2005
Attorney Docket No. 069985-0022

NOTICE

This is a notice regarding your request for acceptance of a fee deficiency submission under 37 CFR 1.28 filed February 7, 2012.

The Office no longer investigates or rejects original or reissue applications under 37 CFR 1.56. **1098 Off. Gaz. Pat. Office 502 (January 3, 1989)**. Therefore, nothing in this Notice is intended to imply that an investigation was done.

Your fee deficiency submission under 37 CFR 1.28 is hereby **ACCEPTED**.

This patent is no longer entitled to small entity status. Accordingly, all future fees paid in this patent must be paid at the large entity rate.

Inquiries related to this communication should be directed to the undersigned at (571) 272-3215.

Charlema Grant

Charlema Grant
Attorney Advisor
Office of Petitions

UNITED STATES PATENT AND TRADEMARK OFFICE

Commissioner for Patents
United States Patent and Trademark Office
P.O. Box 1450
Alexandria, VA 22313-1450
www.uspto.gov

Parks IP Law / UTA
1117 Perimeter Center West
Suite E402
Atlanta GA 30338

MAILED

DEC 20 2010

OFFICE OF PETITIONS

In re Application of
Krupal Patel et al.
Application No. 11/259,635
Filed: October 26, 2005
Attorney Docket No. **04-05G1**

DECISION ON PETITION

This is a decision on the petition under the unintentional provisions of 37 CFR 1.137(b), filed November 30, 2010, to revive the above-identified application.

This application became abandoned for failure to timely pay the issue and publication fees on or before November 19, 2010, as required by the Notice of Allowance and Fee(s) Due, mailed August 19, 2010. Accordingly, the date of abandonment of this application is November 20, 2010.

The petition is hereby **GRANTED**.

The petition satisfies the requirements of 37 CFR 1.137(b) in that petitioner has supplied (1) the reply in the form of payment of the issue fee of $755 and the publication fee of $300, (2) the petition fee of $810; and (3) a proper statement of unintentional delay.

It is not apparent whether the person signing the statement of unintentional delay was in a position to have firsthand or direct knowledge of the facts and circumstances of the delay at issue. Nevertheless, such statement is being treated as having been made as the result of a reasonable inquiry into the facts and circumstances of such delay. See 37 CFR 10.18(b) and Changes to Patent Practice and Procedure; Final Rule Notice, 62 Fed. Reg. 53131, 53178 (October 10, 1997), 1203 Off. Gaz. Pat. Office 63, 103 (October 21, 1997). In the event that such an inquiry has not been made, petitioner must make such an inquiry. If such inquiry results in the discovery that it is not correct that the entire delay in filing the required reply from the due date for the reply until the filing of a grantable petition pursuant to 37 CFR 1.137(b) was unintentional, petitioner must notify the Office.

Telephone inquiries concerning this decision should be directed to JoAnne Burke at (571) 272-4584.

This application is being referred to the Office of Data Management for processing into a patent.

/JoAnne Burke/
JoAnne Burke
Petitions Examiner
Office of Petitions

UNITED STATES PATENT AND TRADEMARK OFFICE

COMMISSIONER FOR PATENTS
UNITED STATES PATENT AND TRADEMARK OFFICE
P.O. BOX 1450
ALEXANDRIA, VA 22313-1450
www.uspto.gov

Paper No.

FISH & RICHARDSON P.C.
PO BOX 1022
MINNEAPOLIS MN 55440-1022

MAILED

AUG 26 2010

OFFICE OF PETITIONS

In re Patent No. 7,595,158	:	DECISION ON REQUEST
Stegh et al.	:	FOR
Issue Date: September 29, 2009	:	RECONSIDERATION OF
Application No. 11/259,640	:	PATENT TERM ADJUSTMENT
Filed: October 25, 2005	:	and
Atty Docket No. 00530-121001	:	NOTICE OF INTENT TO ISSUE
/DFCI898	:	CERTIFICATE OF CORRECTION

This is a decision on the petition filed on November 30, 2009, which is being treated as a petition under 37 CFR 1.705(d) requesting that the patent term adjustment indicated on the above-identified patent be corrected to indicate that the term of the above-identified patent is extended or adjusted by four hundred ninety-three (493) days.

The petition to correct the patent term adjustment indicated on the above-identified patent to indicate that the term of the above-identified patent is extended or adjusted by four hundred ninety-three (493) days is **GRANTED**.

The Office will sua sponte issue a certificate of correction. Pursuant to 37 CFR 1.322, the Office will not issue a certificate of correction without first providing assignee or patentee an opportunity to be heard. Accordingly, patentees are given one (1) month or thirty (30) days, whichever is longer, from the mail date of this decision to respond. No extensions of time will be granted under § 1.136.

The Office acknowledges submission of the $200.00 fee set forth in 37 CFR 1.18(e). No additional fees are required.

The application is being forwarded to the Certificates of Branch for issuance of a certificate of correction. The Office will issue a certificate of correction indicating that the term of the above-identified patent is extended or adjusted by four hundred ninety-three (493) days.

Telephone inquiries specific to this matter should be directed to the undersigned at (571) 272-3219.

Nancy Johnson
Senior Petitions Attorney
Office of Petitions

Enclosure: Copy of DRAFT Certificate of Correction

UNITED STATES PATENT AND TRADEMARK OFFICE

CERTIFICATE OF CORRECTION

PATENT : 7,595,158 B2

DATED : **September 29, 2009** **DRAFT**

INVENTOR(S) : Stegh et al.

It is certified that error appears in the above-identified patent and that said Letters Patent is hereby
corrected as shown below:

On the cover page,

[*] Notice: Subject to any disclaimer, the term of this patent is extended or adjusted under 35 USC 154(b) by 268 days

Delete the phrase "by 268 days" and insert – by 493 days--

UNITED STATES PATENT AND TRADEMARK OFFICE

Commissioner for Patents
United States Patent and Trademark Office
P.O. Box 1450
Alexandria, VA 22313-1450
www.uspto.gov

MAILED

JAN 20 2011

OFFICE OF PETITIONS

GENERAL ELECTRIC COMPANY
GLOBAL RESEARCH
ONE RESEARCH CIRCLE
BLDG. K1-3A59
NISKAYUNA NY 12309

In re Application of	:	
XIAO et al.	:	
Application No. 11/259,712	:	DECISION ON PETITION
Filed: 10/26/2005	:	
Attorney Docket No. 140510	:	

This is a decision on the petition under 37 CFR 1.137(b), filed November 29, 2010, to revive the above-identified application.

The petition is **GRANTED**.

The application became abandoned for failure to timely and proper reply within the meaning of 37 CFR 1.113 to the final Office action, mailed September 3, 2009, which set a shortened statutory period for reply of three (3) months. Petitioner obtained an extension of time for response within the second month pursuant to the provisions of 37 CFR 1.136(a). Accordingly, the application became abandoned on February 4, 2010. A Notice of Abandonment was mailed on March 17, 2010.

The petition satisfies the requirements of 37 CFR 1.137(b) in that applicant has supplied (1) the reply in the form of a RCE, the RCE fee, and the submission required by 37 CFR 1.114; (2) the petition fee; and (3) a proper statement of unintentional delay.

This application is being referred to Technology Center AU 1775 for processing of the RCE and for appropriate action by the Examiner on the amendment submitted in accordance with 37 CFR 1.114.

Telephone inquiries concerning this decision should be directed to the undersigned at (571) 272-3211.

C. T. Donnell

Christina Tartera Donnell
Senior Petitions Attorney
Office of Petitions

UNITED STATES PATENT AND TRADEMARK OFFICE

Commissioner for Patents
United States Patent and Trademark Office
P.O. Box 1450
Alexandria, VA 22313-1450
www.uspto.gov

MAILED
JAN 31 2012
OFFICE OF PETITIONS

BURNS & LEVINSON, LLP
125 SUMMER STREET
BOSTON MA 02110

In re Application of :
Mansouri et al. :
Application No. 11/259,932 :
Filed: October 27, 2005 :
Attorney Dkt. No: INL-060 DV :
For: AUTOMATED SYSTEM FOR :
CONTINUOUSLY AND AUTOMATICALLY :
CALIBRATING ELECTROCHEMICAL :
SENSORS :

ON APPLICATION FOR
PATENT TERM ADJUSTMENT

This is in response to the "REQUEST FOR THE RECONSIDERATION OF THE PATENT TERM ADJUSTMENT DETERMINATION UNDER 37 CFR §1.705", filed December 13, 2011. This request is properly treated under 37 CFR §1.705(b). Applicants dispute the 57 day reduction for the submission of the information disclosure on April 26, 2011.

The Office acknowledges submission of the $200.00 fee set forth in 37 CFR 1.18(e) for consideration of the application for patent term adjustment under 37 CFR 1.705(b).

The application for patent term adjustment is **Dismissed**.

Applicants dispute the 57 day reduction for the submission of the information disclosure statement (IDS) on April 26, 2011. Applicants contend the April 26, 2011 IDS was submitted within the thirty-day window provided under 37 C.F.R. 1.704(d) and would not result in a reduction of any patent term.

Applicants' argument has been considered but deemed to be unpersuasive. A period of reduction of 57 days was warranted based on 37 CFR 1.704(c)(8).37 CFR §1.704(c)(8) provides that a period of reduction is entered for:

Circumstances that constitute a failure of the applicant to engage in reasonable efforts to conclude processing or examination of an application also include the following circumstances, which will result in the following reduction of the period of adjustment set forth in § 1.703 to the extent that the periods are not overlapping:

(8) Submission of a supplemental reply or other paper, other than a supplemental reply or other paper expressly requested by the examiner, after a reply has been filed, in which case the period of adjustment set forth in § 1.703 shall be reduced by the number of days, if any, beginning on the day after the date the initial reply was filed and ending on the date that the supplemental reply or other such paper was filed;

37 CFR 1.704(d) provides:

A paper containing only an information disclosure statement in compliance with § § 1.97 and 1.98 will not be considered a failure to engage in reasonable efforts to conclude prosecution (processing or examination) of the application under paragraphs (c)(6), (c)(8), (c)(9), or (c)(10) of this section if it is accompanied by a statement that each item of information contained in the information disclosure statement (i) was first cited in any communication from a patent Office in a counterpart foreign or international application or from the office, and this communication was not received by any individual designated in § 1.56(c) more than thirty days prior to the filing of the information disclosure Statement or (ii) is a communication that was issued by a patent Office in a counterpart foreign or international application or by the office and this communication was not received by any individual designated in §1.56(c) more than thirty days prior to the filing of the information disclosure statement. This thirty-day period is not extendable.

In this instance, after the filing of a response on February 28, 2011, on April 26, 2011, applicants filed a supplemental response in the form of an information disclosure statement (IDS). The record supports a conclusion that this additional

response was not expressly requested by the examiner. Further, the IDS did not include a §1.704(d) statement. Accordingly, the PTA was properly reduced by 57 days, the number of days beginning on the day after the date the initial reply was filed, March 1, 2011, and ending on the date that the supplemental reply or other such paper was filed, April 26, 2011. The 57 day reduction will not be removed.

Applicants' delay prior to the mailing of the Notice of Allowance is 123 days. Office delay prior to the mailing of the Notice of Allowance is 876 days.

In view thereof, the correct patent term adjustment at the time of the mailing of the notice of allowance is seven hundred fifty-three (753) days.

Any request for reconsideration of the patent term adjustment indicated on the patent must be timely filed within 2 months after issuance pursuant to 37 CFR 1.705(d) and **must** include payment of the required fee under 37 CFR 1.18(e).

The Office of Data Management has been advised of this decision. This application is being referred to the Office of Data Management for issuance of the patent.

Telephone inquiries specific to this matter should be directed to the undersigned at (571) 272-3215.

Charlema Grant

Charlema Grant
Attorney Advisor
Office of Petitions

UNITED STATES PATENT AND TRADEMARK OFFICE

Commissioner for Patents
United States Patent and Trademark Office
P.O. Box 1450
Alexandria, VA 22313-1450
www.uspto.gov

SNR DENTON US LLP
P.O. BOX 061080
CHICAGO IL 60606-1080

MAILED

APR 01 2011

OFFICE OF PETITIONS

In re Application of :
Matthew J. Holcomb :
Application No. 11/259,988 :
Filed: October 26, 2005 :
Attorney Docket No. 12000072-0005-002 :

DECISION DISMISSING PETITIONS
UNDER 37 CFR 1.78(a)(3) AND (a)(6)

This is a decision on the petition under 37 CFR §§ 1.78(a)(3) and 1.78(a)(6), filed March 28, 2011, to accept an unintentionally delayed claim under 35 U.S.C. §§ 120 and 119(e) for the benefit of priority to the prior-filed nonprovisional and provisional applications set forth in the concurrently filed amendment. This is also a decision on the petition under 37 CFR 1.182 to expedite.

The petition under 37 CFR 1.182 is **GRANTED**.

The petition under 37 CFR 1.78(a)(3) and (6) is **DISMISSED**

A petition for acceptance of a claim for late priority under 37 CFR §§ 1.78(a)(3) and 1.78(a)(6) is only applicable to those applications filed on or after November 29, 2000 and after the expiration of the period specified in 37 CFR §§ 1.78(a)(2)(ii) and 1.78(a)(5)(ii). In addition, the petition under 37 CFR §§ 1.78(a)(3) and 1.78(a)(6) must be accompanied by:

(1) the reference required by 35 U.S.C. §§ 120 and 119(e) and 37 CFR §§ 1.78(a)(2)(i) and 1.78(a)(5)(i) of the prior-filed application, unless previously submitted;
(2) the surcharge set forth in § 1.17(t); and
(3) a statement that the entire delay between the date the claim was due under 37 CFR §§ 1.78(a)(2)(ii) and 1.78(a)(5)(ii) and the date the claim was filed was unintentional. The Director may require additional where there is a question whether the delay was unintentional.

The petition does not comply with item (1).

37 CFR 1.78(a)(2)(i) requires that any nonprovisional application claiming the benefit of one or more prior-filed copending nonprovisional applications must contain or be amended to contain a reference to each such prior-filed application, identifying it by application number (consisting of the series code and serial number) and indicating the relationship of the applications. The relationship between the applications is whether the subject application is a continuation, divisional, or continuation-in-part of a prior-filed nonprovisional application. An example of a proper benefit claim is: "This application is a continuation of Application No. 10/---, filed---." A benefit claim that merely states: "This application claims priority from Application No. 10/---, filed---," does not comply with 37 CFR 1.78(a)(2)(i) since the proper relationship, which includes the type of continuing application, is not stated. *See* MPEP Section 201.11, Reference to Prior Nonprovisional Applications. The amendment fails to comply with the provisions of 37 CFR 1.78(a)(2)(i) because the relationship of application 10/697,861 to the instant application is not set forth and is therefore unacceptable.

Additionally, the amendment is not acceptable as drafted since it improperly incorporates by reference the prior-filed applications. An incorporation by reference statement added after an application's filing date is not effective because no new matter can be added to an application after its filing date (*see* 35 U.S.C. § 132(a)). If an incorporation by reference statement is included in an amendment to the specification to add a benefit claim under 35 U.S.C. § 120 after the filing date of the application, the amendment would not be proper. When a benefit claim under 35 U.S.C. § 120 is submitted after the filing of an application, the reference to the prior application cannot include an incorporation by reference statement of the prior application. *See* Dart Industries v. Banner, 636 F.2d 684, 207 USPQ 273 (C.A.D.C. 1980). *Note* MPEP §§ 201.06(c) and 608.04(b).

Before the petition under 37 CFR §§ 1.78(a)(3) and 1.78(a)(6) can be granted, a renewed petition and either an Application Data Sheet or a substitute amendment (complying with the provisions of 37 CFR 1.121 and 37 CFR 1.76(b)(5)) to correct the above matters are required.

Further correspondence with respect to this matter should be addressed as follows:

By mail: Mail Stop PETITIONS
Commissioner for Patents
Post Office Box 1450
Alexandria, VA 22313-1450

By hand: Customer Service Window
Mail Stop Petitions
Randolph Building
401 Dulany Street
Alexandria, VA 22314

By fax: (571) 273-8300
ATTN: Office of Petitions

Any questions concerning this matter may be directed to the undersigned at (571) 272-6842.

Carl Friedman
Petitions Examiner
Office of Petitions

UNITED STATES PATENT AND TRADEMARK OFFICE

Commissioner for Patents
United States Patent and Trademark Office
P.O. Box 1450
Alexandria, VA 22313-1450
www.uspto.gov

MAILED

APR 19 2011

OFFICE OF PETITIONS

SNR DENTON US LLP
P.O. BOX 061080
CHICAGO IL 60606-1080

In re Application of	:
Matthew J. Holcomb	:
Application No. 11/259,988	: DECISION ON PETITIONS
Filed: October 26, 2005	: UNDER 37 CFR 1.78(a)(3) AND (a)(6)
Attorney Docket No. 12000072-0005-002	:

This is a decision on the renewed petition under 37 CFR §§ 1.78(a)(3) and 1.78(a)(6), filed April 7, 2011, to accept an unintentionally delayed claim under 35 U.S.C. §§120 and 119(e) for the benefit of the prior-filed applications set forth in the concurrently filed amendment.

The petition is **GRANTED.**

A petition for acceptance of a claim for late priority under 37 CFR §§ 1.78(a)(3) and 1.78(a)(6) is only applicable to those applications filed on or after November 29, 2000. Further, the petition is appropriate only after the expiration of the period specified in 37 CFR §§ 1.78(a)(2)(ii) and 1.78(a)(5)(ii). In addition, the petition under 37 CFR §§ 1.78(a)(3) and 1.78(a)(6) must be accompanied by:

(1) the reference required by 35 U.S.C. §§ 120 and 119(e) and 37 CFR §§ 1.78(a)(2)(i) and 1.78(a)(5)(i) of the prior-filed application, unless previously submitted;

(2) the surcharge set forth in § 1.17(t); and

(3) a statement that the entire delay between the date the claim was due under 37 CFR §§ 1.78(a)(2)(ii) and 1.78(a)(5)(ii) and the date the claim was filed was unintentional. The Director may require additional information where there is a question whether the delay was unintentional.

Additionally, the instant nonprovisional application must be pending at the time of filing of the reference to the prior-filed provisional application as required by 37 CFR 1.78(a)(5)(ii). Further, the nonprovisional application claiming the benefit of the prior-filed provisional application must have been filed within twelve months of the filing date of the prior-filed provisional application.

All the above requirements having been satisfied, the late claim for benefit of priority under 35 U.S.C. §§ 120 and 119(e) is accepted as being unintentionally delayed.

The granting of the petition to accept the delayed benefit claim to the prior-filed applications under 37 CFR §§ 1.78(a)(3) and 1.78(a)(6) should not be construed as meaning that this application is entitled to the benefit of the filing date of the prior-filed applications. In order for this application to be entitled to the benefit of the prior-filed applications, all other requirements under 35 U.S.C. §§120 and 1.78(a)(1) and (a)(2) and under 35 U.S.C. §119(e) and 37 CFR 1.78(a)(4) and (a)(5) must be met. Similarly, the fact that the corrected Filing Receipt accompanying this decision on petition includes the prior-filed applications should not be construed as meaning that applicant is entitled to the claim for benefit of priority to the prior-filed applications noted thereon. Accordingly, the examiner will, in due course, consider this benefit claim and determine whether the application is entitled to the benefit of the earlier filing date.

A corrected Filing Receipt, which includes the priority claim to the prior-filed applications, accompanies this decision on petition.

Any questions concerning this matter may be directed to Carl Friedman at (571) 272-6842. All other inquiries concerning either the examination procedures or status of the application should be directed to the Technology Center.

This application is being forwarded to Technology Center Art Unit 2836 for consideration by the examiner of the claim under 35 U.S.C. § §120 and 119(e) of the prior-filed nonprovisional and provisional applications.

Carl Friedman
Petitions Examiner
Office of Petitions

ATTACHMENT : Corrected Filing Receipt

UNITED STATES PATENT AND TRADEMARK OFFICE

UNITED STATES DEPARTMENT OF COMMERCE
United States Patent and Trademark Office
Address: COMMISSIONER FOR PATENTS
P.O. Box 1450
Alexandria, Virginia 22313-1450
www.uspto.gov

APPLICATION NUMBER	FILING or 371(c) DATE	GRP ART UNIT	FIL FEE REC'D	ATTY.DOCKET.NO	TOT CLAIMS	IND CLAIMS
11/259,988	10/26/2005	2836	665	12000072-0005-002	14	4

CONFIRMATION NO. 6789

CORRECTED FILING RECEIPT

26263
SNR DENTON US LLP
P.O. BOX 061080
CHICAGO, IL 60606-1080

OC000000047233302

Date Mailed: 04/19/2011

Receipt is acknowledged of this non-provisional patent application. The application will be taken up for examination in due course. Applicant will be notified as to the results of the examination. Any correspondence concerning the application must include the following identification information: the U.S. APPLICATION NUMBER, FILING DATE, NAME OF APPLICANT, and TITLE OF INVENTION. Fees transmitted by check or draft are subject to collection. Please verify the accuracy of the data presented on this receipt. **If an error is noted on this Filing Receipt, please submit a written request for a Filing Receipt Correction. Please provide a copy of this Filing Receipt with the changes noted thereon. If you received a "Notice to File Missing Parts" for this application, please submit any corrections to this Filing Receipt with your reply to the Notice. When the USPTO processes the reply to the Notice, the USPTO will generate another Filing Receipt incorporating the requested corrections**

Applicant(s)

Matthew J. Holcomb, Metamora, MI;

Power of Attorney: The patent practitioners associated with Customer Number 26263

Domestic Priority data as claimed by applicant

This appln claims benefit of 60/622,476 10/26/2004
and claims benefit of 60/629,079 11/18/2004
and claims benefit of 60/637,176 12/17/2004
and claims benefit of 60/703,660 07/29/2005
and is a CIP of 10/697,861 10/29/2003 PAT 7,378,376
which claims benefit of 60/424,979 11/08/2002

Foreign Applications (You may be eligible to benefit from the **Patent Prosecution Highway** program at the USPTO. Please see http://www.uspto.gov for more information.)

If Required, Foreign Filing License Granted: 12/08/2005

The country code and number of your priority application, to be used for filing abroad under the Paris Convention, is **US 11/259,988**

Projected Publication Date: Not Applicable

Non-Publication Request: No

Early Publication Request: No
**** SMALL ENTITY ****

Title

Fault current limiting system

Preliminary Class

361

PROTECTING YOUR INVENTION OUTSIDE THE UNITED STATES

Since the rights granted by a U.S. patent extend only throughout the territory of the United States and have no effect in a foreign country, an inventor who wishes patent protection in another country must apply for a patent in a specific country or in regional patent offices. Applicants may wish to consider the filing of an international application under the Patent Cooperation Treaty (PCT). An international (PCT) application generally has the same effect as a regular national patent application in each PCT-member country. The PCT process **simplifies** the filing of patent applications on the same invention in member countries, but **does not result** in a grant of "an international patent" and does not eliminate the need of applicants to file additional documents and fees in countries where patent protection is desired.

Almost every country has its own patent law, and a person desiring a patent in a particular country must make an application for patent in that country in accordance with its particular laws. Since the laws of many countries differ in various respects from the patent law of the United States, applicants are advised to seek guidance from specific foreign countries to ensure that patent rights are not lost prematurely.

Applicants also are advised that in the case of inventions made in the United States, the Director of the USPTO must issue a license before applicants can apply for a patent in a foreign country. The filing of a U.S. patent application serves as a request for a foreign filing license. The application's filing receipt contains further information and guidance as to the status of applicant's license for foreign filing.

Applicants may wish to consult the USPTO booklet, "General Information Concerning Patents" (specifically, the section entitled "Treaties and Foreign Patents") for more information on timeframes and deadlines for filing foreign patent applications. The guide is available either by contacting the USPTO Contact Center at 800-786-9199, or it can be viewed on the USPTO website at http://www.uspto.gov/web/offices/pac/doc/general/index.html.

For information on preventing theft of your intellectual property (patents, trademarks and copyrights), you may wish to consult the U.S. Government website, http://www.stopfakes.gov. Part of a Department of Commerce initiative, this website includes self-help "toolkits" giving innovators guidance on how to protect intellectual property in specific countries such as China, Korea and Mexico. For questions regarding patent enforcement issues, applicants may call the U.S. Government hotline at 1-866-999-HALT (1-866-999-4158).

LICENSE FOR FOREIGN FILING UNDER

Title 35, United States Code, Section 184

Title 37, Code of Federal Regulations, 5.11 & 5.15

GRANTED

The applicant has been granted a license under 35 U.S.C. 184, if the phrase "IF REQUIRED, FOREIGN FILING LICENSE GRANTED" followed by a date appears on this form. Such licenses are issued in all applications where the conditions for issuance of a license have been met, regardless of whether or not a license may be required as

set forth in 37 CFR 5.15. The scope and limitations of this license are set forth in 37 CFR 5.15(a) unless an earlier license has been issued under 37 CFR 5.15(b). The license is subject to revocation upon written notification. The date indicated is the effective date of the license, unless an earlier license of similar scope has been granted under 37 CFR 5.13 or 5.14.

This license is to be retained by the licensee and may be used at any time on or after the effective date thereof unless it is revoked. This license is automatically transferred to any related applications(s) filed under 37 CFR 1.53(d). This license is not retroactive.

The grant of a license does not in any way lessen the responsibility of a licensee for the security of the subject matter as imposed by any Government contract or the provisions of existing laws relating to espionage and the national security or the export of technical data. Licensees should apprise themselves of current regulations especially with respect to certain countries, of other agencies, particularly the Office of Defense Trade Controls, Department of State (with respect to Arms, Munitions and Implements of War (22 CFR 121-128)); the Bureau of Industry and Security, Department of Commerce (15 CFR parts 730-774); the Office of Foreign AssetsControl, Department of Treasury (31 CFR Parts 500+) and the Department of Energy.

NOT GRANTED

No license under 35 U.S.C. 184 has been granted at this time, if the phrase "IF REQUIRED, FOREIGN FILING LICENSE GRANTED" DOES NOT appear on this form. Applicant may still petition for a license under 37 CFR 5.12, if a license is desired before the expiration of 6 months from the filing date of the application. If 6 months has lapsed from the filing date of this application and the licensee has not received any indication of a secrecy order under 35 U.S.C. 181, the licensee may foreign file the application pursuant to 37 CFR 5.15(b).

SPE RESPONSE FOR CERTIFICATE OF CORRECTION

Paper No.:20110801

DATE : August 2, 2011

TO SPE OF : ART UNIT 2876

SUBJECT : Request for Certificate of Correction on Patent No.: 7,819,307

A response is requested with respect to the accompanying request for a certificate of correction.

Please complete this form and return with file, within **7** days to:
Certificates of Correction Branch - PK 3-910
Palm location **7590** - Tel. No. 305-8201

With respect to the change(s) requested, correcting Office and/or Applicant's errors, should the patent read as shown in the certificate of correction? No new matter should be introduced, nor should the scope or meaning of the claims be changed.

Thank You For Your Assistance **Certificates of Correction Branch**

The request for issuing the above-identified correction(s) is hereby:
Note your decision on the appropriate box.

☒ **Approved** **All** changes apply.

☐ **Approved in Part** Specify below which changes **do not** apply.

☐ **Denied** State the reasons for denial below.

Comments:

SPE: Michael G. Lee **Art Unit** 2876

OK TO ENTER: /DS/

IN THE UNITED STATES PATENT & TRADEMARK OFFICE

ATTORNEY DOCKET NUMBER: 200501925-1

IN RE APPLICATION OF: U.S. Patent No. 7,819,307

USPTO CONFIRMATION CODE: 6930

APPLICATION NO.: 11/260,061

FILED: Oct. 27, 2005

EXAMINER: DANIEL STCYR

GROUP ART UNIT: 2876

FOR: METHOD AND SYSTEM FOR MANAGING MONETARY VALUE ON A MOBILE DEVICE

37 CFR 1.322 & 37 CFR 1.323 REQUEST FOR CERTIFICATE OF CORRECTION

HONORABLE COMMISSIONER OF PATENTS & TRADEMARKS

Sir:

The following is a request for a certificate of correction in Serial Number 11/260,061, now Patent Number 7,819,307.

A certificate of correction under 35 USC 254 is respectfully requested in the above-identified patent.

☐ All errors were the fault of the USPTO, no fee required. In the event that a further fee is required, please charge the amount to Deposit Account No. 082025.

☒ All errors were the fault of the applicant and, accordingly, please charge **$100.00** to our Deposit Account No. 082025. In the event that a further fee is required, please charge the amount to the same Deposit Account.

☐ The errors were the fault of both the applicant and USPTO and, accordingly, please charge **$100.00** to our Deposit Account No. 082025. In the event that a further fee is required, please charge the amount to the same Deposit Account.

The exact location where the error appears in the patent and patent application is as follows:

OK TO ENTER: /DS/

In column 11, line 53, in Claim 7, delete "RFIO" and insert - - RFID - -, therefor. (Appeal Brief Filed on Mar. 29, 2010, page 16, in claim 8, line 1)

The requested correction is attached on Form PTO 1050.

Respectfully Submitted

March 17, 2011
DATE

/David A. Plettner/
Name: David A. Plettner
Registration No.: 36,241

Attorney/Agent of Record

HEWLETT-PACKARD COMPANY
Intellectual Property Administration
3404 E. Harmony Road
Mail Stop 35
Fort Collins, CO 80528

OK TO ENTER: /DS/

PTO/SB/44 (04-05)
Approved for use through 04/30/2007. OMB 0651-0033
U.S. Patent and Trademark Office; U.S. DEPARTMENT OF COMMERCE
Under the Paperwork Reduction Act of 1995, no persons are required to respond to a collection of information unless it displays a valid OMB control number.
(Also Form PTO-1050)

UNITED STATES PATENT AND TRADEMARK OFFICE
CERTIFICATE OF CORRECTION

PATENT NO. : 7,819,307

APPLICATION NO. : 11/260,061

ISSUE DATE : Oct. 26, 2010

INVENTOR(S) : Robert E. Lyons et al.

It is certified that an error appears or errors appear in the above-identified patent and that said Letters Patent is hereby corrected as shown below:

In column 11, line 53, in Claim 7, delete "RFIO" and insert - - RFID - -, therefor.

MAILING ADDRESS OF SENDER (Please do not use customer number below):

Hewlett-Packard Company
Intellectual Property Administration
3404 E. Harmony Road
Mail Stop 35
Fort Collins, CO 80528

This collection of information is required by 37 CFR 1.322, and 1.323, and 1.324. The information is required to obtain or retain a benefit by the public which is to file (and by the USPTO to process) an application. Confidentiality is governed by 35 U.S.C 122 and 37 CFR 1.14. This collection is estimated to take 1.0 hour to complete, including gathering, preparing, and submitting the completed application form to the USPTO. Time will vary depending upon the individual case. Any comments on the amount of time you require to complete this form and/or suggestions for reducing this burden, should be sent to the Chief Information Officer, U.S. Patent and Trademark Office, U.S. Department of Commerce, P.O. Box 1450, Alexandria, VA 22313-1450. DO NOT SEND FEES OR COMPLETED FORMS TO THIS ADDRESS. **SEND TO: Attention Certificate of Corrections Branch, Commissioner for Patent, P.O. Box 1450, Alexandria, VA 22313-1450.**

If you need assistance in completing the form, call 1-800-PTO-9199 and select option 2.

UNITED STATES PATENT AND TRADEMARK OFFICE

Commissioner for Patents
United States Patent and Trademark Office
P.O. Box 1450
Alexandria, VA 22313-1450
www.uspto.gov

MAILED
FEB 14 2011
OFFICE OF PETITIONS

COLGATE-PALMOLIVE COMPANY
909 RIVER ROAD
PISCATAWAY, NJ 08855

In re Application of
Nora Lin, et al.
Application No. 11/260,116
Filed: October 27, 2005
Attorney Docket No. 7559-00-OC

DECISION ON PETITION

This is a decision on the petition under the unintentional provisions of 37 CFR 1.137(b), filed January 14, 2011, to revive the above-identified application.

The application became abandoned for failure to reply in a timely manner to the non-final Office action mailed, December 28, 2009, which set a shortened statutory period for reply of three (3) months. No extensions of time under the provisions of 37 CFR 1.136(a) were obtained. Accordingly, the application became abandoned on March 29, 2010.

The petition satisfies the requirements of 37 CFR 1.137(b) in that petitioner has supplied (1) the reply in the form of an amendment, (2) the petition fee of $1620, and (3) a proper statement of unintentional delay.

In view of the above, the petition is **GRANTED**.

An extension of time under 37 CFR 1.136 must be filed prior to the expiration of the maximum extendable period for reply. See In re Application of S., 8 USPQ2d 1630, 1631 (Comm'r Pats. 1988). Since the $1110 extension of time fee submitted with the petition on January 14, 2011 was subsequent to the maximum extendable period for reply, this fee is unnecessary and will be credited to petitioner's deposit account.

Telephone inquiries concerning this decision should be directed to undersigned at (571) 272-1642. All other inquiries concerning the examination or status of this application should be directed to the Technology Center.

This application is being referred to Technology Center AU 1612 for appropriate action by the Examiner in the normal course of business on the reply received January 14, 2011.

April M. Wise
Petitions Examiner
Office of Petitions

UNITED STATES PATENT AND TRADEMARK OFFICE

Commissioner for Patents
United States Patent and Trademark Office
P.O. Box 1450
Alexandria, VA 22313-1450
www.uspto.gov

BANNER & WITCOFF, LTD.
ATTORNEYS FOR CLIENT NO. 016689
1100 13TH STREET, N.W., SUITE 1200
WASHINGTON, DC 20005-4051

MAILED
NOV 08 2010
OFFICE OF PETITIONS

In re Application of :
Naoto Iwao et al :
Application No. 11/260,162 : ON PETITION
Filed: October 28, 2005 :
Attorney Docket No. 006838.00019

This is a decision on the petition, filed November 4, 2010 under 37 CFR 1.313(c)(2) to withdraw the above-identified application from issue after payment of the issue fee.

The petition is **GRANTED**.

The above-identified application is withdrawn from issue for consideration of a submission under 37 CFR 1.114 (request for continued examination). See 37 CFR 1.313(c)(2).

Petitioner is advised that the issue fee paid on September 27, 2010 in the above-identified application cannot be refunded. If, however, the above-identified application is again allowed, petitioner may request that it be applied towards the issue fee required by the new Notice of Allowance.[1]

Telephone inquiries should be directed to Irvin Dingle at (571) 272-3210.

This matter is being referred to Technology Center AU 2853 for processing of the request for continued examination under 37 CFR 1.114 and for consideration of the concurrently filed Information Disclosure Statement.

/Irvin Dingle/
Irvin Dingle
Petitions Examiner
Office of Petitions

---

[1] The request to apply the issue fee to the new Notice may be satisfied by completing and returning the new Issue Fee Transmittal Form PTOL-85(b), which includes the following language thereon: Commissioner for Patents is requested to apply the Issue Fee and Publication Fee (if any) or re-apply any previously paid issue fee to the application identified above. Petitioner is advised that, whether a fee is indicated as being due or not, the Issue Fee Transmittal Form **must** be completed and timely submitted to avoid abandonment. Note the language in bold text on the first page of the Notice of Allowance and Fee(s) Due (PTOL-85).

Doc Code: PET.AUTO Document Description: Petition automatically granted by EFS-Web	PTO/SB/140 U.S. Patent and Trademark Office Department of Commerce

Electronic Petition Request	**PETITION TO WITHDRAW AN APPLICATION FROM ISSUE AFTER PAYMENT OF THE ISSUE FEE UNDER 37 CFR 1.313(c)**
Application Number	11260162
Filing Date	28-Oct-2005
First Named Inventor	Naoto Iwao
Art Unit	2853
Examiner Name	JULIAN HUFFMAN
Attorney Docket Number	006838.00019
Title	INK JET PRINTER, METHOD OF CONTROLLING AN INK JET PRINTER, AND COMPUTER PROGRAM PRODUCT FOR AN INK JET PRINTER

An application may be withdrawn from issue for further action upon petition by the applicant. To request that the Office withdraw an application from issue, applicant must file a petition under this section including the fee set forth in § 1.17(h) and a showing of good and sufficient reasons why withdrawal of the application from issue is necessary.

APPLICANT HEREBY PETITIONS TO WITHDRAW THIS APPLICATION FROM ISSUE UNDER 37 CFR 1.313(c).

A grantable petition requires the following items:
(1) Petition fee; and
(2) One of the following reasons:
(a) Unpatentability of one or more claims, which must be accompanied by an unequivocal statement that one or more claims are unpatentable, an amendment to such claim or claims, and an explanation as to how the amendment causes such claim or claims to be patentable;
(b) Consideration of a request for continued examination in compliance with § 1.114 (for a utility or plant application only); or
(c) Express abandonment of the application. Such express abandonment may be in favor of a continuing application, but not a CPA under 37 CFR 1.53(d).

Petition Fee

☐ Applicant claims SMALL ENTITY status. See 37 CFR 1.27.

☐ Applicant is no longer claiming SMALL ENTITY status. See 37 CFR 1.27(g)(2).

☐ Applicant(s) status remains as SMALL ENTITY.

☒ Applicant(s) status remains as other than SMALL ENTITY

Reason for withdrawal from issue

○ One or more claims are unpatentable

◉ Consideration of a request for continued examination (RCE) (List of Required Documents and Fees)

○ Applicant hereby expressly abandons the instant application (any attorney/agent signing for this reason must have power of attorney pursuant to 37 CFR 1.32(b)).

RCE request,submission, and fee.

☐ I certify, in accordance with 37 CFR 1.4(d)(4) that : The RCE request ,submission, and fee have already been filed in the above-identified application on

☒ Are attached.

THIS PORTION MUST BE COMPLETED BY THE SIGNATORY OR SIGNATORIES

I certify, in accordance with 37 CFR 1.4(d)(4) that I am:

◉ An attorney or agent registered to practice before the Patent and Trademark Office who has been given power of attorney in this application.

○ An attorney or agent registered to practice before the Patent and Trademark Office, acting in a representative capacity.

○ A sole inventor

○ A joint inventor; I certify that I am authorized to sign this submission on behalf of all of the inventors

○ A joint inventor; all of whom are signing this e-petition

○ The assignee of record of the entire interest that has properly made itself of record pursuant to 37 CFR 3.71

Signature	/Gary D. Fedorochko/
Name	Gary D. Fedorochko
Registration Number	35509

UNITED STATES PATENT AND TRADEMARK OFFICE

Commissioner for Patents
United States Patent and Trademark Office
P.O. Box 1450
Alexandria, VA 22313-1450
www.uspto.gov

Decision Date : May 13,2011

In re Application of :

Naoto Iwao

DECISION ON PETITION

UNDER CFR 1.313(c)(2)

Application No : 11260162

Filed : 28-Oct-2005

Attorney Docket No : 006838.00019

This is an electronic decision on the petition under 37 CFR 1.313(c)(2), filed May 13,2011 , to withdraw the above-identified application from issue after payment of the issue fee.

The petition is **GRANTED.**

The above-identified application is withdrawn from issue for consideration of a submission under 37 CFR 1.114 (request for continued examination). See 37 CFR 1.313(c)(2).

Petitioner is advised that the issue fee paid in this application cannot be refunded. If, however, this application is again allowed, petitioner may request that it be applied towards the issue fee required by the new Notice of Allowance.

Telephone inquiries concerning this decision should be directed to the Patent Electronic Business Center (EBC) at 866-217-9197.

This application file is being referred to Technology Center AU 2853 for processing of the request for continuing examination under 37 CFR 1.114 .

Office of Petitions

SPE RESPONSE FOR CERTIFICATE OF CORRECTION

DATE : August 25, 2010

TO SPE OF : ART UNIT 2883
SUBJECT : Request for Certificate of Correction for Appl. No/11/260165 /pat. 7728313

Please respond to this request for a certificate of correction within 7 days.

FOR IFW FILES:

Please review the requested changes/corrections as shown in the **COCIN** document(s) in the IFW application image. No new matter should be introduced, nor should the scope or meaning of the claims be changed.

Please complete the response (see below) and forward the completed response to scanning using document code **COCX**.

FOR PAPER FILES:

Please review the requested changes/corrections as shown in the attached certificate of correction. Please complete this form (see below) and forward it with the file to:

Certificates of Correction Branch (CofC)
Randolph Square – 9D10-A
Palm Location 7580

Magdalene Talley

Certificates of Correction Branch

571-272-0423

Thank You For Your Assistance

The request for issuing the above-identified correction(s) is hereby:
Note your decision on the appropriate box.

- [X] **Approved** — **All** changes apply.
- [ ] **Approved in Part** — Specify below which changes **do not** apply.
- [ ] **Denied** — State the reasons for denial below.

Comments:

/Ed Glick/ 2882

SPE **Art Unit**

SPE RESPONSE FOR CERTIFICATE OF CORRECTION

DATE : 3/29/2012

TO SPE OF : ART UNIT 2611

SUBJECT : Request for Certificate of Correction for Appl. No.: 11/260336 Patent No.: 8098040 B2

CofC mailroom date: 3/22/2012

Please respond to this request for a certificate of correction within 7 days.

FOR IFW FILES:

Please review the requested changes/corrections as shown in the **COCIN** document(s) in the IFW application image. No new matter should be introduced, nor should the scope or meaning of the claims be changed.

Please complete the response (see below) and forward the completed response to scanning using document code **COCX**.

FOR PAPER FILES:

Please review the requested changes/corrections as shown in the attached certificate of correction. Please complete this form (see below) and forward it with the file to:

Certificates of Correction Branch (CofC)
Randolph Square – 9D10-A
Palm Location 7580

Note: _____

_____

Virginia Tolbert

Certificates of Correction Branch

(571) 272-0460

Thank You For Your Assistance

The request for issuing the above-identified correction(s) is hereby:
Note your decision on the appropriate box.

- ☒ **Approved** — **All** changes apply.
- ☐ **Approved in Part** — Specify below which changes **do not** apply.
- ☐ **Denied** — State the reasons for denial below.

Comments: _____

SPE

2611
Art Unit

UNITED STATES PATENT AND TRADEMARK OFFICE

UNITED STATES DEPARTMENT OF COMMERCE
United States Patent and Trademark Office
Address: COMMISSIONER FOR PATENTS
P.O. Box 1450
Alexandria, Virginia 22313-1450
www.uspto.gov

APPLICATION NO.	FILING DATE	FIRST NAMED INVENTOR	ATTORNEY DOCKET NO.	CONFIRMATION NO.
11/260,472	10/28/2005	Myoung-Ki Min	P57674	4838

8439 7590 08/26/2011
ROBERT E. BUSHNELL & LAW FIRM
2029 K STREET NW
SUITE 600
WASHINGTON, DC 20006-1004

EXAMINER
DOVE, TRACY MAE

ART UNIT	PAPER NUMBER
1726	

NOTIFICATION DATE	DELIVERY MODE
08/26/2011	ELECTRONIC

Please find below and/or attached an Office communication concerning this application or proceeding.

The time period for reply, if any, is set in the attached communication.

Notice of the Office communication was sent electronically on above-indicated "Notification Date" to the following e-mail address(es):

rebushnell@aol.com
mail@rebushnell.com
info@rebushnell.com

UNITED STATES PATENT AND TRADEMARK OFFICE

Commissioner for Patents
United States Patent and Trademark Office
P.O. Box 1450
Alexandria, VA 22313-1450
www.uspto.gov

wk

Mailed : 8/26/11

In re Application of
Min et al.
Serial No. 11/260,472
Filed: October 28, 2005
For: **CATALYST FOR A FUEL CELL, A METHOD OF PREPARING THE SAME, AND A FUEL CELL SYSTEM COMPRISING THE SAME**

DECISION ON PETITION

This is a decision on the PETITION FILED UNDER 37 CFR 1.181 on April 4, 2011 to consider the Information Disclosure Statement (IDS) that was filed on February 3, 2011. The Examiner considered all the references on the IDS except for the Japanese Office Action issued on January 7, 2011 in the corresponding Japanese Patent Application. The Office Action was not in English. Applicants explained that the relevance of the attached Japanese Office action as it is presently understood by the Applicants is that the references cited in the present Information Disclosure Statement is cited by the Japanese examiner in this Office Action issued in the corresponding Japanese Patent Application No. 2005-314299.

For non-English documents that are cited, the following must be provided:

(a) A concise explanation of the relevance, as it is presently understood by the individual designated in 37 CFR 1.56(c) most knowledgeable about the content of the information, unless a complete translation is provided; and/or

(b) A written English language translation of a non-English language document, or portion thereof, if it is within the possession, custody or control of, or is readily available to any individual designated in 37 CFR 1.56(c).

Applicants at the time of submission did not provide a translation.of the document however Applicants did provide an explanation of relevance as it was presently understood by the individual designated in 37 CFR 1.56(c). A review of the record does indicate that Applicants did provide a translation of the office action on April 21, 2011 filed in their remarks section.

DECISION

Accordingly, the petition is **GRANTED**.

The Examiner is requested to consider the Japanese Office Action that was filed with the IDS on February 3, 2011.

/W. GARY JONES/
Director, Technology Center 1700
Chemical and Materials Engineering

Robert Bushnell
ROBERT E. BUSHNELL & LAW FIRM
2029 K STREET NW
SUITE 600
WASHINGTON DC 20006-1004

UNITED STATES PATENT AND TRADEMARK OFFICE

Commissioner for Patents
United States Patent and Trademark Office
P.O. Box 1450
Alexandria, VA 22313-1450
www.uspto.gov

HAYNES AND BOONE, LLP
IP SECTION
2323 VICTORY AVENUE
SUITE 700
DALLAS, TX 75219

MAILED

MAR 14 2011

OFFICE OF PETITIONS

In re Application of
John E. McLoughlin et al.
Application No. 11/260,550
Filed: October 28, 2005
Attorney Docket No. 39789.8

DECISION ON PETITION
TO WITHDRAW
FROM RECORD

This is a decision on the Request to Withdraw as attorney or agent of record under 37 C.F.R. § 1.36(b), filed January 11, 2011.

The request is **NOT APPROVED.**

The Office will no longer accept address changes to a new practitioner or law firm filed with a Request, absent the filing of a power of attorney to the new representative. The Office will either change the correspondence address of record to the most current address information provided for the assignee of the entire interest who properly became of record under 37 CFR 3.71 or, if no assignee of the entire interest has properly been made of record under 37 CFR 3.71, the most current address information provided for the first named inventor.

Accordingly, the request to withdraw from record cannot be approved because the request to change the correspondence address is not that of: (1) the first named inventor; or (2) an assignee of the entire interest under 37 C.F.R 3.71. If an assignee has ownership in this application, then a current Statement under 37 CFR 3.73(b) or a copy of the actual assignment must be provided with a renewed request.

All future communications from the Office will continue to be directed to the above-identified address until otherwise properly notified.

Telephone inquiries concerning this decision should be directed to the undersigned at 571-272-4618.

/Kimberly Inabinet/

Kimberly Inabinet
Petitions Examiner
Office of Petitions

UNITED STATES PATENT AND TRADEMARK OFFICE

Commissioner for Patents
United States Patent and Trademark Office
P.O. Box 1450
Alexandria, VA 22313-1450
www.uspto.gov

BASF AG
CARL-BOSCH-STRASSE 38
6700 LUDWIGSHAFEN
RHEINLAND-PFATZ D-67056 67056 DE GERMANY

MAILED

JAN 06 2011

OFFICE OF PETITIONS

In re Patent No. 7,520,600
Issue Date: April 21, 2009
Application No. 11/260,779
Filed: October 27, 2005
Attorney Docket No. JD-586A US

DECISION ON PETITION

This is a decision on the Petition To Correct Name Of Assignee On An Issued Patent Under 37 C.F.R. §1.183, filed January 21, 2010, which is being treated as a Petition Under 37 CFR §3.81(b), requesting correction on the Title Page of the subject patent to include the co-assignee's name and residence. A completed Certificate of Correction Form (Modified PTO/SB/44) was previously submitted on December 14, 2009.

The petition under 37 CFR §3.81(b) is **GRANTED**.

Petitioner urges that the present Petition was submitted to include the co-assignee's name and residence on the previously submitted PTOL 85B and such error was inadvertent. Accordingly, petitioner requests that a Certificate of Correction (PTO/SB/44) be issued to include the co-assignee's name and residence to the Title Page of the Letters Patent.

37 CFR 3.81(b), effective June 25, 2004, reads:

> *After payment of the issue fee:* Any request for issuance of an application in the name of the assignee submitted after the date of payment of the issue fee, and any request for a patent to be corrected to state the name of the assignee, must state that the assignment was submitted for recordation as set forth in § 3.11 before issuance of the patent, and must include a request for a certificate of correction under § 1.323 of this chapter (accompanied by the fee set forth in § 1.20(a) and the processing fee set forth in § 1.17(i) of this chapter.

The requisite $100.00 fee (Fee Code 1811), as set forth under 37 CFR 1.20(a), has been submitted. However, the credit card payment in the amount of $130.00 processing fee (Fee Code 1464), as set forth under 37 CFR 1.17(i), was not charged. Therefore, since the petition was accompanied deposit account authorization to charge any required fees, the $130.00 processing fee has been charged as authorized. Further, Office assignment records are consistent with the requested correction. Accordingly, since the Petition complies with the provisions of 37 CFR 3.81(b), it is appropriate for the Office to issue a Certificate of Correction in accordance with the content of the Form (Modified PTO/SB/44) submitted with the petition.

The file does not indicate a change of address has been submitted, although the address given on the petition differs from the address of record. If appropriate, a change of address should be filed in accordance with MPEP 601.03. A courtesy copy of this decision is being mailed to the address given on the petition; however, the Office will mail all future correspondence solely to the address of record.

Inquiries related this communication should be directed to the undersigned at (571)272-3213.

Any questions concerning the issuance of a Certificate of Correction should be directed to the Certificates of Correction Branch at (571) 272-4200.

This matter is being referred to the Certificates of Correction Branch for processing of a Certificate of Correction in U.S. Patent No. 7,520,600.

Cheryl Gibson-Baylor

Cheryl Gibson-Baylor
Petitions Examiner
Office of Petitions

cc: FOLEY & LARDNER LLP
150 East Gilman Street
P.O. Box 1497
Madison, WI 53701-149

UNITED STATES PATENT AND TRADEMARK OFFICE

Commissioner for Patents
United States Patent and Trademark Office
P.O. Box 1450
Alexandria, VA 22313-1450
www.uspto.gov

KATTEN MUCHIN ROSENMAN LLP
575 MADISON AVENUE
NEW YORK NY 10022-2585

MAILED

JAN 31 2011

OFFICE OF PETITIONS

In re Patent No. 7,688,909	:	
Tsutsui	:	
Issue Date: March 30, 2010	:	DECISION ON
Application No. 11/260,808	:	PATENT TERM ADJUSTMENT
Filed: October 27, 2005	:	
Attorney Docket No. 100794-00994	:	

This is a decision on the "APPLICATION FOR PATENT TERM ADJUSTMENT UNDER 37 CFR § 1.705(d)", filed March 19, 2010. Patentee requests that the patent term adjustment indicated on the patent be corrected from eight hundred eighty-nine (889) days to eight hundred ninety-nine (899) days.

The application for patent term adjustment is **DISMISSED**.

On March 30, 2010, the above-identified application matured into U.S. Patent No. 7,688,909 with a patent term adjustment of 889 days. On March 19, 2010, patentee filed the instant "APPLICATION FOR PATENT TERM ADJUSTMENT UNDER 37 CFR 1.705(d)".

The Office determined a patent term adjustment of eight hundred eighty-nine (889) days based on an adjustment of six hundred seventy-nine (679) days of PTO delay pursuant to 35 U.S.C. 154(b)(1)(A)(i) and 37 C.F.R. § 1.703(a)(1), and three hundred

sixty-five (365) days pursuant to 35 U.S.C. 154(b)(1)(B) and 37 CFR 1.703(b), reduced by fifty-five (55) and forty-two (42) days pursuant to 37 CFR 1.704(b), forty-nine (49) days pursuant to 37 CFR 1.704(c)(8), and nine (9) days of overlapping delay between "A" and "B" delay.

A review of the file does not reveal any error in the determination of the patent term adjustment. The application was filed on October 27, 2005. Accordingly, the three year delay period began on October 28, 2008, and ended on October 27, 2009 (applicant filed an RCE on October 28, 2009). See 37 CFR 1.703(b)(1).

In view thereof, the correct determination of PTA at the time of issuance is **eight hundred eighty-nine (889)** days (1035 days of PTO delay, reduced by 146 days of applicant delay).

The $200 fee under 37 C.F.R. §1.18(e) has been charged to Deposit Account No. 50-1290, as authorized.

Telephone inquiries specific to this matter should be directed to Petitions Attorney Cliff Congo at (571)272-3207.

Anthony Knight
Director
Office of Petitions

SPE RESPONSE FOR CERTIFICATE OF CORRECTION

Paper No.: _____

DATE : 02/17/11

TO SPE OF : ART UNIT 1634

SUBJECT : Request for Certificate of Correction for Appl. No.: 11260842 Patent No.: 7807465

CofC mailroom date: 02/03/11

Please respond to this request for a certificate of correction within 7 days.

FOR IFW FILES:

Please review the requested changes/corrections as shown in the **COCIN** document(s) in the IFW application image. No new matter should be introduced, nor should the scope or meaning of the claims be changed.

Please complete the response (see below) and forward the completed response to scanning using document code **COCX**.

FOR PAPER FILES:

Please review the requested changes/corrections as shown in the attached certificate of correction. Please complete this form (see below) and forward it with the file to:

Certificates of Correction Branch (CofC)
Randolph Square – 9D10-A
Palm Location 7580

You can fax the Directors/SPE response to 571-270-9990

Certificates of Correction Branch

Lamonte Newsome

Certificates of Correction Branch

571-272-3421

Thank You For Your Assistance

The request for issuing the above-identified correction(s) is hereby:

Note your decision on the appropriate box.

X **Approved**	**All** changes apply.
❑ **Approved in Part**	Specify below which changes **do not** apply.
❑ **Denied**	State the reasons for denial below.

Comments: /Dave Nguyen/ SPE ART UNIT 1634

Formatted: Indent: Left: 1.22"

SPE RESPONSE FOR CERTIFICATE OF CORRECTION

Deleted:

/Dave Nguyen/

Deleted:

Deleted:

SPE Art Unit 1634

Deleted:

Deleted:

SPE RESPONSE FOR CERTIFICATE OF CORRECTION

Paper No.: _____

DATE : 02/17/11

TO SPE OF : ART UNIT 1634

SUBJECT : Request for Certificate of Correction for Appl. No.: 11260842 Patent No.: 7807465

CofC mailroom date: 02/03/11

Please respond to this request for a certificate of correction within 7 days.

FOR IFW FILES:

Please review the requested changes/corrections as shown in the **COCIN** document(s) in the IFW application image. No new matter should be introduced, nor should the scope or meaning of the claims be changed.

Please complete the response (see below) and forward the completed response to scanning using document code **COCX**.

FOR PAPER FILES:

Please review the requested changes/corrections as shown in the attached certificate of correction. Please complete this form (see below) and forward it with the file to:

Certificates of Correction Branch (CofC)
Randolph Square – 9D10-A
Palm Location 7580

[redacted]

Certificates of Correction Branch

Lamonte Newsome

Certificates of Correction Branch
571-272-3421

Thank You For Your Assistance

The request for issuing the above-identified correction(s) is hereby:
Note your decision on the appropriate box.

XApproved	**All** changes apply.
☐ **Approved in Part**	Specify below which changes **do not** apply.
☐ **Denied**	State the reasons for denial below.

Comments: /Dave Nguyen/ SPE ART UNIT 1634

SPE RESPONSE FOR CERTIFICATE OF CORRECTION

/Dave Nguyen/

SPE Art Unit 1634

UNITED STATES PATENT AND TRADEMARK OFFICE

Commissioner for Patents
United States Patent and Trademark Office
P.O. Box 1450
Alexandria, VA 22313-1450
www.uspto.gov

Decision Date : May 10,2011

In re Application of :

Ronald Blum

Application No : 11261035

Filed : 28-Oct-2005

Attorney Docket No : 027798-000110US

DECISION ON REQUEST TO WITHDRAW AS ATTORNEY/AGENTOF RECORD

This is an electronic decision on the Request to Withdraw as attorney or agent of record under 37 CFR § 1.36(b), filed May 10,2011

The request is **APPROVED.**

The request was signed by John McGroarty (registration no. 41186) on behalf of all attorneys/agents associated with Customer Number 20350 . All attorneys/agents associated with Cusotmer Number 20350 have been withdrawn.

Since there are no remaining attorneys of record, all future communications from the Office will be directed to the first named inventor or assignee that has properly made itself of record pursuant to 37 CFR 3.71, with correspondence address:

Name	PixelOptics, Inc.
Name2	
Address 1	5241 Valleypark Drive
Address 2	
City	Roanoke
State	VA
Postal Code	24019
Country	US

As a reminder, requester is required to inform the first named inventor or assignee that has properly made itself of record pursuant to 37 CFR 3.71 of the electronically processed petition.

Telephone inquiries concerning this decision should be directed to the Patent Electronic Business Center (EBC) at 866-217-9197.

Office of Petitions

Doc Code: PET.AUTO **Document Description: Petition automatically granted by EFS-Web**	PTO/SB/83 U.S. Patent and Trademark Office Department of Commerce

Electronic Petition Request	**REQUEST FOR WITHDRAWAL AS ATTORNEY OR AGENT AND CHANGE OF CORRESPONDENCE ADDRESS**
Application Number	11261035
Filing Date	28-Oct-2005
First Named Inventor	Ronald Blum
Art Unit	3774
Examiner Name	LESLIE COBURN
Attorney Docket Number	027798-000110US
Title	Electro-active intraocular lenses

◉ Please withdraw me as attorney or agent for the above identified patent application and the practitioners of record associated with Customer Number: 20350

The reason(s) for this request are those described in 37 CFR:

10.40(b)(4)

Certifications

☒ I/We have given reasonable notice to the client, prior to the expiration of the response period, that the practitioner(s) intend to withdraw from employment

☒ I/We have delivered to the client or a duly authorized representative of the client all papers and property (including funds) to which the client is entitled

☒ I/We have notified the client of any responses that may be due and the time frame within which the client must respond

Change the correspondence address and direct all future correspondence to the first named inventor or assignee that has properly made itself of record pursuant to 37 CFR 3.71:

Name	PixelOptics, Inc.
Address	5241 Valleypark Drive
City	Roanoke
State	VA
Postal Code	24019
Country	US

I am authorized to sign on behalf of myself and all withdrawing practitioners.	
Signature	/John McGroarty/
Name	John McGroarty
Registration Number	41186

SPE RESPONSE FOR CERTIFICATE OF CORRECTION

DATE : 03/06/12

TO SPE OF : ART UNIT 2862

SUBJECT : Request for Certificate of Correction for Appl. No.: 11261109 Patent No.: 7983548

CofC mailroom date: 02/26/12

Please respond to this request for a certificate of correction within 7 days.

FOR IFW FILES:

Please review the requested changes/corrections as shown in the **COCIN** document(s) in the IFW application image. No new matter should be introduced, nor should the scope or meaning of the claims be changed.

Please complete the response (see below) and forward the completed response to scanning using document code **COCX**.

FOR PAPER FILES:

Please review the requested changes/corrections as shown in the attached certificate of correction. Please complete this form (see below) and forward it with the file to:

Certificates of Correction Branch (CofC)
Randolph Square – 9D10-A
Palm Location 7580
You can fax the Directors/SPE response to 571-273-3421

Note: **Should the changes in claim 1 be approved?**

Lamonte Newsome

Certificates of Correction Branch

571-272-3421

Thank You For Your Assistance

The request for issuing the above-identified correction(s) is hereby:
Note your decision on the appropriate box.

SPE RESPONSE FOR CERTIFICATE OF CORRECTION

☒ **Approved** — **All** changes apply.

☐ **Approved in Part** — Specify below which changes **do not** apply.

☐ **Denied** — State the reasons for denial below.

Comments: Changes correct typographic error.

2862

SPE **Art Unit**

UNITED STATES PATENT AND TRADEMARK OFFICE

Commissioner for Patents
United States Patent and Trademark Office
P.O. Box 1450
Alexandria, VA 22313-1450
www.uspto.gov

HEWLETT-PACKARD COMPANY
Intellectual Property Administration
3404 E. Harmony Road
Mail Stop 35
FORT COLLINS CO 80528

MAILED
DEC 06 2011
OFFICE OF PETITIONS

In re Application of :
Baggs :
Application No. 11/261,143 : ON PETITION
Filed: October 28, 2005 :
Attorney Docket No. 82207661 :

This is a decision on the petition under the unintentional provisions of 37 CFR 1.137(b), filed November 14, 2011, to revive the above-identified application.

The petition is GRANTED.

The application became abandoned September 28, 2011 for failure to timely submit a proper reply in response to the decision mailed July 27, 2011. Notice of Abandonment was mailed November 7, 2011.

A grantable petition pursuant to 37 C.F.R. § 1.137(b) must be accompanied by: (1) the required reply to the outstanding Office action or notice, unless previously filed; (2) the petition fee as set forth in 37 C.F.R. § 1.17(m); (3) a statement that the entire delay in filing the required reply from the due date for the reply until the filing of a grantable petition pursuant to 37 C.F.R. § 1.137(b) was unintentional; and (4) any terminal disclaimer (and fee set forth in 37 C.F.R. § 1.20(d)) required pursuant to 37 C.F.R. § 1.137(c).

The petition satisfies the requirements of 37 CFR 1.137(b) in that petitioner has supplied (1) the reply in the form of a Request for Continued Examination (RCE), including fee and submission required by 37 CFR 1.114; (2) the required petition fee; and (3) a proper statement of unintentional delay.

This application is being referred to Technology Center AU 2625 for processing of the RCE and for appropriate action by the Examiner in the normal course of business on the amendment submitted in accordance with 37 CFR 1.114.

Telephone inquiries concerning this decision should be directed to the undersigned at (571) 272-3205.

/ALESIA M. BROWN/

Alesia M. Brown
Attorney Advisor
Office of Petitions

UNITED STATES PATENT AND TRADEMARK OFFICE

COMMISSIONER FOR PATENTS
UNITED STATES PATENT AND TRADEMARK OFFICE
P.O. BOX 1450
ALEXANDRIA, VA 22313-1450
www.uspto.gov

In re Patent No. SKINNER, ANTHONY T.	:	
Issue Date: May 20, 2008	:	**DECISION GRANTING**
Appl No.: 11/261,184	:	**PETITION**
Filed: October 28, 2005	:	*37 CFR 1.324*
For: DEVICE FOR VENTING A CONTAINER	:	
HOUSING AN ENERGETIC MATERIAL AND	:	
METHOD OF USING SAME	:	
	:	

This is a decision on the petition filed August 29, 2008 to correct inventorship under 37 CFR 1.324.

The petition is granted.

The patented file is being forwarded to Certificate of Corrections Branch for issuance of a certificate naming only the actual inventor or inventors.

__/Michael J. Carone/__

Michael J. Carone
Supervisory Patent Examiner
Art Unit 3641
Technology Center 3600

DAVIS PATENT SERVICES, LLC
9616 RAVENSWOOD RD.
GRANBURY, TX 76049

UNITED STATES PATENT AND TRADEMARK OFFICE

COMMISSIONER FOR PATENTS
UNITED STATES PATENT AND TRADEMARK OFFICE
P.O. BOX 1450
ALEXANDRIA, VA 22313-1450
www.uspto.gov

DATE: September 9, 2011
TO: Certificates of Correction Branch
FROM: Michael J. Carone
SPE, Art Unit 3641
SUBJECT: REQUEST FOR CERTIFICATE OF CORRECTION

Please issue a Certificate of Correction in U. S. Letters Patent No. 7,373,885 as identified on the attached Certificate.

/Michael J. Carone/
Michael J. Carone, SPE
Art Unit 3641

UNITED STATES PATENT AND TRADEMARK OFFICE

CERTIFICATE

Patent No. 7,373,885
Patented: May 20, 2008

On petition requesting issuance of a certificate for correction of inventorship pursuant to 35 U.S.C. 256, it has been found that the above identified patent, through error and without deceptive intent, improperly sets forth the inventorship. Accordingly, it is hereby certified that the correct inventorship of this patent is:

Anthony T. Skinner

Michael L. Fortner

/Michael J. Carone/
Michael J. Carone
Supervisory Patent Examiner
Art Unit 3641

UNITED STATES PATENT AND TRADEMARK OFFICE

Commissioner for Patents
United States Patent and Trademark Office
P.O. Box 1450
Alexandria, VA 22313-1450
www.uspto.gov

MINTZ, LEVIN, COHN, FERRIS, GLOVSKY & POPEO, P.C.
ONE FINANCIAL CENTER
BOSTON MA 02111

MAILED

OCT 29 2010

OFFICE OF PETITIONS

ON PETITION

In re Application of :
Cherry, et al. :
Application No. 11/261,582 :
Filed: October 31, 2005 :
Docket No. 34874-290/2005P00109US :

This is a decision on the petition, filed August 9, 2010, under 37 CFR 1.183 to waive 37 CFR 1.131 to the extent that it requires that all of the named inventors execute the declaration filed thereunder.

The petition under 37 CFR 1.183 to waive 37 CFR 1.131 is **granted**.

Petitioner asserts that, while both of the named inventors contributed to the conception of the claimed invention which is under rejection, only inventor Michel Martin agreed to execute the declaration under 37 CFR 1.131, filed May 16, 2010, in support of establishing a date of invention of at least June 12, 2005.

Petitioner alleges that Inventor Sebastien Cherry has refused to sign the declaration under 37 CFR 1.131 and requests that the Office accept the declaration executed by less than all the joint inventors.

37 CFR 1.131(a) states,

> When any claim of an application or a patent under reexamination is rejected, the inventor of the subject matter of the rejected claim, the owner of the patent under reexamination, or the party qualified under §§ 1.42, 1.43, or 1.47, may submit an appropriate oath or declaration to establish invention of the subject matter of the rejected claim prior to the effective date of the reference or activity on which the rejection is based.

The Office has stated the signature requirements can be waived in certain circumstances.

(1) The assignee or other party in interest can sign the affidavit or declaration if none of the inventors will sign the declaration. See MPEP 714.

(2) The affidavit or declaration can be signed by fewer than all the inventors if the other inventors are deceased, refuse to sign, or are unavailable.

Petitioner has established that the non-signing inventor, Sebastien Cherry, expressly refused to sign the declaration after being presented with it. Therefore, the signature requirement of Mr. Cherry on the May 16, 2010 declaration under 37 CFR 1.131 is waived.

The Office acknowledges receipt of the required $400.00 Rule 183 petition fee.

The application is being returned to Technology Center A.U. 2173 for the examiner of record to consider whether the May 16, 2010 declaration submitted under 37 CFR 1.131 establishes invention of the subject matter of the rejected claims prior to the effective date of the *Armstrong* reference, June 12, 2005.

Telephone inquiries regarding this communication should be directed to the undersigned at (571) 272-3230.

Shirene Willis Brantley

Shirene Willis Brantley
Senior Petitions Attorney
Office of Petitions

UNITED STATES PATENT AND TRADEMARK OFFICE

Commissioner for Patents
United States Patent and Trademark Office
P.O. Box 1450
Alexandria, VA 22313-1450
www.uspto.gov

QUALCOMM INCORPORATED
5775 MOREHOUSE DR.
SAN DIEGO CA 92121

MAILED

JUL 01 2011

OFFICE OF PETITIONS

In re Application of
Aamod Khandekar et al.
Application No. 11/261,805
Filed: October 27, 2005
Attorney Docket No. 060061U2

ON PETITION

This is a decision on the renewed petition under 37 CFR 1.137(b)[1], filed June 22, 2011, to revive the above-identified application.

The petition under 37 CFR 1.137 (b) is **GRANTED**.

This application became abandoned for failure to timely pay the issue fee in response to the Notice of Allowance mailed November 25, 2009 which set a three month statutory period for response. Accordingly, the Notice of Abandonment was mailed March 12, 2010. In lieu of payment of the issue fee, a Request for Continued Examination (RCE) and Information Disclosure Statement (IDS) was filed with a petition filed March 23, 2010 under 37 CFR 1.137(b). The petition was dismissed in a decision mailed May 11, 2010 because payment of the issue fee is the required reply in order to revive the application for failure to submit a timely response to the Notice of Allowance, not an RCE and IDS.

Comes now petitioner with the instant petition and payment of the issue fee and publication fee. Petitioner is advised that as the petition fee was previously paid with the

---

[1]Effective December 1, 1997, the provisions of 37 CFR 1.137(b) now provide that where the delay in reply was unintentional, a petition may be filed to revive an abandoned application or a lapsed patent pursuant to 37 CFR 1.137(b). A grantable petition filed under the provisions of 37 CFR 1.137(b) must be accompanied by:

(1) the required reply, unless previously filed. In a nonprovisional application abandoned for failure to prosecute, the required reply may be met by the filing of a continuing application. In an application or patent, abandoned or lapsed for failure to pay the issue fee or any portion thereof, the required reply must be the payment of the issue fee or any outstanding balance thereof.

(2) the petition fee as set forth in 37 CFR 1.17(m);

(3) a statement that the entire delay in filing the required reply from the due date for the reply until the filing of a grantable petition pursuant to 37 CFR 1.137(b) was unintentional. The Director may require additional information where there is a question whether the delay was unintentional; and

(4) any terminal disclaimer (and fee as set forth in 37 CFR 1.20(d)) required pursuant to 37 CFR 1.137(c)).

petition filed March 23, 2010, the fee paid with the instant petition is a duplicate and will be credited back to deposit account no. 17-0026.

All other requirements of 37 CFR 1.137(b) having now been met, this matter is being referred to Technology Center 2617 for processing of the RCE and the IDS filed on March 23, 2010.

Telephone inquiries concerning this matter may be directed to the undersigned Petitions Attorney at (571) 272-3212.

Patricia Faison-Ball

Patricia Faison-Ball
Senior Petitions Attorney
Office of Petitions

UNITED STATES PATENT AND TRADEMARK OFFICE

Commissioner for Patents
United States Patent and Trademark Office
P.O. Box 1450
Alexandria, VA 22313-1450
www.uspto.gov

E I DU PONT DE NEMOURS AND COMPANY
LEGAL PATENT RECORDS CENTER
BARLEY MILL PLAZA 25/1122B
4417 LANCASTER PIKE
WILMINGTON, DE 19805

MAILED
NOV 09 2010
OFFICE OF PETITIONS

In re Application of	:	
Boussaad et al.	:	
Application No. 11/261,810	:	DECISION ON PETITION
Filed: October 28, 2005	:	
Attorney Docket No. CL2619USNA	:	

This is a decision on the petition under the unintentional provisions of 37 CFR 1.137(b), filed October 18, 2010, to revive the above-identified application.

The petition is **GRANTED**.

This application became abandoned as a result of petitioner's failure to timely file an appeal brief (and fee required by 37 CFR 41.20(b)(2)) within the time period provided in 37 CFR 41.37(a)(1). As an appeal brief (and appeal brief fee) was not filed within two (2) months of the Notice of Appeal filed December 14, 2009, no extensions of time under the provisions of 37 CFR 1.136(a) were obtained, the appeal was dismissed and the proceedings as to the rejected claims were terminated. See 37 CFR 1.197(b). As no claim was allowed, the application became abandoned by operation of law on February 15, 2010. *See* MPEP 1215.04. A Notice of Abandonment was mailed September 8, 2010.

The petition satisfies the requirements of 37 CFR 1.137(b) in that petitioner has supplied (1) the reply in the form of an Appeal Brief and fee of $540; (2) the petition fee of $1,620; and (3) a proper statement of unintentional delay.

Telephone inquiries concerning this decision should be directed to the undersigned at (571) 272-6059.

This application is being referred to Technology Center 1783 for further examination on the merits.

A. Kelley

Alicia Kelley
Petitions Examiner
Office of Petitions

UNITED STATES PATENT AND TRADEMARK OFFICE

Commissioner for Patents
United States Patent and Trademark Office
P.O. Box 1450
Alexandria, VA 22313-1450
www.uspto.gov

MINTZ, LEVIN, COHN, FERRIS, GLOVSKY AND POPEO, P.C
ONE FINANCIAL CENTER
BOSTON MA 02111

MAILED
JUN 14 2011
OFFICE OF PETITIONS

In re Patent No. 7,901,894	: DECISION ON REQUEST
Hangauer et al.	: FOR
Issue Date: 03/08/2011	: RECONSIDERATION OF
Application No. 11/261,858	: PATENT TERM ADJUSTMENT
Filed: 10/27/2005	: and
Atty Docket No.	: NOTICE OF INTENT TO ISSUE
28856-501 CON	: CERTIFICATE OF CORRECTION

This is a decision on the petition filed on April 29, 2011, under 37 CFR 1.705(d) requesting that the patent term adjustment indicated on the above-identified patent be corrected to indicate that the term of the above-identified patent is extended or adjusted by three hundred twenty-four (324) days.

The petition to correct the patent term adjustment indicated on the above-identified patent to indicate that the term of the above-identified patent is extended or adjusted by three hundred twenty-four (324) days is **GRANTED**.

Petitioner is reminded of the policy set forth in the Federal Register as stated in *Treatment of Letters Stating That the USPTO's Patent Term Adjsutment Determination Is Greater Than What the Applicant or Patentee Believes Is Appropriate*, 75 *Fed. Reg.* 42079 (July 20, 2010).

The Office acknowledges submission of the $200.00 fee set forth in 37 CFR 1.18(e). No additional fees are required.

The Office thanks patentees for their good faith and candor in bringing this to the attention of the Office.

The application is being forwarded to the Certificates of Correction Branch for issuance of a certificate of correction. The Office will issue a certificate of correction indicating that the term of the above-identified patent is extended or adjusted by **three hundred twenty-four (324)** days.

Telephone inquiries specific to this matter should be directed to the undersigned at (571) 272-3231.

D Wood

Douglas I. Wood
Senior Petitions Attorney
Office of Petitions

Enclosure: Copy of DRAFT Certificate of Correction

UNITED STATES PATENT AND TRADEMARK OFFICE

CERTIFICATE OF CORRECTION

PATENT : 7,901,894 B2

DATED : **Mar. 8, 2011** **DRAFT**

INVENTOR(S) : Hanguaer et al.

It is certified that error appears in the above-identified patent and that said Letters Patent is hereby corrected as shown below:

On the cover page,

[*] Notice: Subject to any disclaimer, the term of this patent is extended or adjusted under 35 USC 154(b) by 244 days.

Delete the phrase "by 244 days" and insert – by 324 days--

UNITED STATES PATENT AND TRADEMARK OFFICE

Commissioner for Patents
United States Patent and Trademark Office
P.O. Box 1450
Alexandria, VA 22313-1450
www.uspto.gov

SCHWEGMAN LUNDBERG & WOESSNER PA
PO BOX 2938
MINNEAPOLIS MN 55402

MAILED
SEP 14 2010
OFFICE OF PETITIONS

In re Application of	:	
Dwelly, et al.	:	
Application No. 11/261,875	:	ON PETITION
Filed: October 28, 2005	:	
Attorney Docket No. 1547.045US1	:	

This is a decision on the renewed petition under 37 CFR 1.137(b), filed October 8, 2009, to revive the above-identified application.

The petition under 37 CFR 1.137(b) is **GRANTED**.

The above application became abandoned for failure to file a timely reply to the non-final Office action mailed on January 31, 2006. This Office action set a shortened statutory period for reply of three months. No reply having been received, the application became abandoned on May 1, 2006. The Office mailed a Notice of Abandonment on January 9, 2007. Applicants filed a petition to revive under 37 CFR 1.137(b) on July 23, 2009. However, the petition was dismissed in a decision mailed on September 8, 2009. The petition was dismissed because the application had been abandoned for an extended period of time, and petitioner did not account for the delay in filing the petition.

With the instant petition, petitioner has accounted for the delay in filing the petition to revive. The other requirements for a grantable petition under 37 CFR 1.137(b) were previously satisfied with the petition filed on July 23, 2009.

The application is being forwarded to Group Art Unit 3662 for consideration of the Amendment filed July 23, 2009.

Telephone inquiries concerning this decision should be directed to the undersigned at (571)272-3207.

Cliff Congo
Petitions Attorney
Office of Petitions

UNITED STATES PATENT AND TRADEMARK OFFICE

UNITED STATES DEPARTMENT OF COMMERCE
United States Patent and Trademark Office
Address: COMMISSIONER FOR PATENTS
P.O. Box 1450
Alexandria, Virginia 22313-1450
www.uspto.gov

APPLICATION NO.	FILING DATE	FIRST NAMED INVENTOR	ATTORNEY DOCKET NO.	CONFIRMATION NO.
11/261,875	10/28/2005	Wesley Dwelly	1547.045US1	8592

21186 7590 08/30/2011
SCHWEGMAN, LUNDBERG & WOESSNER, P.A.
P.O. BOX 2938
MINNEAPOLIS, MN 55402

EXAMINER
GREGORY, BERNARR E

ART UNIT	PAPER NUMBER
3662	

NOTIFICATION DATE	DELIVERY MODE
08/30/2011	ELECTRONIC

Please find below and/or attached an Office communication concerning this application or proceeding.

The time period for reply, if any, is set in the attached communication.

Notice of the Office communication was sent electronically on above-indicated "Notification Date" to the following e-mail address(es):

uspto@slwip.com
request@slwip.com

UNITED STATES PATENT AND TRADEMARK OFFICE

Commissioner for Patents
United States Patent and Trademark Office
P.O. Box 1450
Alexandria, VA 22313-1450
www.uspto.gov

AUG 2 9 2011

SCHWEGMAN, LUNDBERG & WOESSNER, P.A.
P.O. BOX 2938
MINNEAPOLIS MN 55402

In re Application of
Wesley H. Dwelly, et al. : DECISION ON PETITIONS
Appl. No. 11/261,875 : UNDER 37 CFR §1.181
Attorney Docket No. 1547.045US1 :
Filed: October 28, 2005
For: BIOMETRIC RADAR SYSTEM AND METHOD FOR IDENTIFYING PERSONS AND POSITIONAL STATES OF PERSONS

This is a decision on applicant's two petitions under 37 CFR 1.181 filed on July 13, 2011 to (1) accept a late petition and (2) accept either the originally filed declaration or a declaration after payment of the issue fee.

The Petitions are **GRANTED**.

On December 21, 2010, an Ex Parte Quayle action required a new oath or declaration because the original declaration was missing the inventors' printed middle names or initials. Applicant's response on January 27, 2011 did not include a new oath or declaration, but argued that MPEP 602.03 permits the examiner to waive minor deficiencies that are self-evidently cured in the rest of the oath or declaration. The middle initials in the inventors' signatures is argued as the required self-evident cure. The examiner did not accept the argument and sent a Notice of Allowability on April 13, 2011 with a repeated requirement for a new oath or declaration. Applicant filed a petition to accept a late petition on July 13, 2011, the last day of the period for response to the Notice of Allowability. The petition stated that the repeated requirement for a new declaration was unexpected and just noticed, and furthermore could not be timely obtained. The petition to accept late petition was motivated by applicant's concern that the petition to accept the declaration could be construed as untimely because it was filed after the 37 CFR 1.182(f) period - 2 months from the date of the action from which relief is requested . Also on July 13, 2011, applicant filed the instant petition to accept either the original declaration or a declaration that would be subsequently filed. The new declaration was subsequently filed on July 19, 2011.

In view of applicant's described surprise and in order to expedite prosecution, applicant's petition to have the late petition considered is granted. In view of MPEP 602.03 which permits a waiver of a new oath or declaration, the waiver is hereby granted. In view of the fact that a corrected oath has been filed, the new oath is accepted as a replacement for the original and no annotation of the oath by the examiner is needed as described in MPEP 602.03.

The application will be forwarded to Publication Branch for preparation to be issued as a patent.

SUMMARY: The Petitions are **GRANTED**.

Any questions regarding this decision should be directed to Thomas H. Tarcza at 571-272-6979.

Katherine A. Matecki

Katherine A. Matecki
Director, Technology Center 3600
571-272-5250

snm/THT: 8/19/10

SM

Tech Center Routing Sheet

Application # 12/372,110 Doc Code Date _____

Date of Request _____ Doc Code 610 (if not listed)

☐ 136A Blanket Authorization to charge fee	☐ CRFE CRF Entered	☐ NPL Non Patent Literature
☐ A.. Amendment	☐ CTMS Misc. Office Action	☐ NRES Letter restarting period of repsonse
☐ AMSB Amendment Submitted with CPA/RCE	☐ DISQ Terminal Disclaimer Approval Form	☐ NTC.A.NONCPL Notice of Non-Compliant Amendment
☐ ANE.I Amendment After Final, Initialed by Examiner	☐ EXIN Examiner Interview	☑ PET.DEC.TC Petition Decision Routed to TC
☐ APDEC Board of Appeals Decision	☐ FOR Foreign Reference	☐ SA Supplemental Response or Amendment
☐ APEA Examiner's Answer to Appeal Brief	☐ IIFW File Wrapper Issue Information	☐ SRFW File Wrapper Search Information
☐ BIB Bibiliographic Data Sheet	☐ N271 Response to Amendment under 312	☐ SRNT Examiner Search Notes
☐ CLM Claims	☐ N570 Accepted Change to Power of Attorney	☐ WCLM Claim Worksheet
☐ CLMPTO USPTO Prepared Claim Set	☐ NFDR Formal Drawings Required	☐ WFEE Fee Worksheet
☐ CRFD CRF Defective	☐ NOA Notice of Allowability or Allowance	☐ XRUSH Response to a Printer Query

UNITED STATES PATENT AND TRADEMARK OFFICE

UNITED STATES DEPARTMENT OF COMMERCE
United States Patent and Trademark Office
Address: COMMISSIONER FOR PATENTS
P.O. Box 1450
Alexandria, Virginia 22313-1450
www.uspto.gov

APPLICATION NO.	FILING DATE	FIRST NAMED INVENTOR	ATTORNEY DOCKET NO.	CONFIRMATION NO.
12/372,110	02/17/2009	Richard Sapper	080532	9075

23464 7590 08/30/2011
BUCHANAN INGERSOLL & ROONEY PC
P.O. BOX 1404
ALEXANDRIA, VA 22313-1404

EXAMINER
SMITH, NKEISHA

ART UNIT	PAPER NUMBER
3632	

NOTIFICATION DATE	DELIVERY MODE
08/30/2011	ELECTRONIC

Please find below and/or attached an Office communication concerning this application or proceeding.

The time period for reply, if any, is set in the attached communication.

Notice of the Office communication was sent electronically on above-indicated "Notification Date" to the following e-mail address(es):

ADIPFDD@bipc.com
offserv@bipc.com

UNITED STATES PATENT AND TRADEMARK OFFICE

Commissioner for Patents
United States Patent and Trademark Office
P.O. Box 1450
Alexandria, VA 22313-1450
www.uspto.gov

AUG 29 2011

Buchanan, Ingersoll & Rooney, PC
P.O. Box 1404
Alexandria, VA 22313-1404

In re Application of Richard Sapper et al. Application No. 12/372,110 Filed: February 17, 2009 For: SUPPORT APPARATUS	: DECISION ON THE PETITION : REGARDING REQUEST TO : WITHDRAW REQUIREMENT : FOR RESTRICTION

Applicant's petition under 37 CFR 1.144, filed June 30, 2010, requests the supervisor to withdraw the restriction requirement made final in the Office action of April 22, 2010. The delay in treating this petition is sincerely regretted.

The petition is **DISMISSED**.

A review of the file record indicates that the examiner in this case issued a Requirement for Restriction between 7 patentably distinct species on March 3, 2010. The applicant responded with an election of species I with traverse on March 23, 2010. The examiner made the election final in a non-final Office action dated April 22, 2010. The applicant responded with an amendment and the instant petition on June 30, 2010. Since the filing of this petition the examiner has issued a Final rejection on November 16, 2010, applicant has submitted an after-final amendment on January 14, 2011, the examiner issued an Advisory Action on February 4, 2011, the applicant filed a Notice of Appeal on February 7, 2011 and an Appeal Brief on April 5, 2011, the examiner issued an Examiner's Answer on May 27, 2011, and a Reply Brief was filed by the applicant on June 27, 2011.

Applicant's petition argues that the required election of species between species I - VII was improper. Applicant argues that the examiner has failed to show that there is an examination burden on the examiner should the election not be required. The applicant specifically argues that the examiner "must provide reasons and/or examples to support conclusions" to support a restriction requirement, and that the examiner has failed to provide any reason or example as to why any one of listed species may add a significant burden to the examiner's search burden for this application. The applicant acknowledges that the examiner, in response to the traversal in the election of March 23, 2010, indicated that the application contains claims wherein the "different embodiments have differing prior art". However, the applicant argues that this statement is merely a "conclusory" statement which fails to provide reasons and/or examples to support the conclusions.

Applicant is correct that the examiner is required to provide reasons and/or examples establishing that the restriction is proper, as provided for in MPEP 803 and 808.02. However, the argument that the examiner's statement that "different embodiments have differing prior art" does not satisfy the above requirement on the examiner is not agreed with. The examiner's statement is sufficient to indicate that the claimed species are such that they would require a different field of search and that the prior art applicable to one invention would not likely be applicable to another invention which are valid examples of a burden on the examiner.

The petition filed June 30, 2010 to overturn the requirement for restriction of March 3, 2010 is **DISMISSED**.

This application is being returned to the examiner to await a decision on appeal to the Board of Appeals.

Any questions or comments with respect to this decision should be forwarded to Quality Assurance Specialist Steven N. Meyers at (571) 272-6611.

Kathy Matecki

Kathy Matecki, Director
Patent Technology Center 3600
(571) 272-5250

snm/snm: 8/25/11

SM

UNITED STATES PATENT AND TRADEMARK OFFICE

Commissioner for Patents
United States Patent and Trademark Office
P.O. Box 1450
Alexandria, VA 22313-1450
www.uspto.gov

THOMPSON COBURN LLP
ONE US BANK PLAZA
SUITE 3500
ST LOUIS MO 63101

MAILED

DEC 14 2011

OFFICE OF PETITIONS

In re Patent No. 7,222,588	:	
Issued: May 29, 2007	:	
Application No. 11/261,889	:	NOTICE
Filed: October 28, 2005	:	
Attorney Docket No. 44772/58661	:	

This is a notice regarding your request for acceptance of a fee deficiency submission under 37 CFR 1.28 filed November 2, 2011.

On September 1, 1998, the Court of Appeals for the Federal Circuit held that 37 CFR 1.28(c) is the sole provision governing the time for correction of the erroneous payment of the issue fee as a small entity. **See DH Technology v. Synergystex International, Inc. 154 F.3d 1333, 47 USPQ2d 1865 (Fed. Cir. Sept. 1, 1998).**

The Office no longer investigates or rejects original or reissue applications under 37 CFR 1.56. **1098 Off. Gaz. Pat. Office 502 (January 3, 1989)**. Therefore, nothing in this Notice is intended to imply that an investigation was done.

Your fee deficiency submission under 37 CFR 1.28 is hereby **ACCEPTED**.

This patent is no longer entitled to small entity status. Accordingly, all future fees paid in this patent must be paid at the large entity rate.

Telephone inquiries concerning this decision should be directed to the undersigned at (571) 272-7751.

/Joan Olszewski/
Joan Olszewski
Petitions Examiner
Office of Petitions

UNITED STATES PATENT AND TRADEMARK OFFICE

Commissioner for Patents
United States Patent and Trademark Office
P.O. Box 1450
Alexandria, VA 22313-1450
www.uspto.gov

WOODCOCK WASHBURN LLP
CIRA CENTRE, 12TH FLOOR
2929 ARCH STREET
PHILADELPHIA, PA 19104-2891

MAILED
SEP 02 2011
OFFICE OF PETITIONS

In re Application of	:	
Michael Sean Swanson, et al.	:	
Application No. 11/261,977	:	ON PETITION
Filed: October 28, 2005	:	
Attorney Docket No.: DFPI-0007	:	

This is a decision in response to the petition, filed August 10, 2011, under the provisions of 37 CFR 1.181 (no fee) to withdraw the holding of abandonment in the above-identified application.

There is no indication that the person signing the petition was ever given a power of attorney or authorization of agent to prosecute the above-identified application. However, in accordance with 37 CFR 1.34(a), the signature of Joseph R. Condo appearing on the petition shall constitute a representation to the United States Patent and Trademark Office that he is authorized to represent the particular party on whose behalf he acts. A courtesy copy of this decision is being mailed to petitioner. If Mr. Condo desires to receive future correspondence regarding this application, the appropriate power of attorney or authorization of agent must be submitted. All future correspondence regarding this application file will be directed solely to the address of record.

The petition is **DISMISSED**.

The application became abandoned for failure to submit corrected drawings in a timely manner in reply to the Notice of Allowability, mailed March 31, 2011, which set a period for reply of three (3) months. A Notice of Abandonment was mailed on July 22, 2011. On August 10, 2011, the present petition was filed.

Petitioner argues that no abandonment existed, since the examiner withdrew the requirement for corrected drawings in a Supplemental Notice of Allowability mailed April 18, 2011. Accordingly, petitioner requests that the abandonment be withdrawn.

Petitioner's argument is not well taken. The Supplemental Notice of Allowability of April 18, 2011 serves as a supplement to the original Notice of Allowability of March 31, 2011. In fact, the record indicates that the Supplemental Notice of Allowability was issued merely to remove claim 6 from the allowed claims as noted in the Interview Summary of April 18, 2011. Also, the Examiner has confirmed that replacement drawings are required in this application because the application contains photographs or color drawings.

Any further inquiries with respect to the sufficiency of drawings should be directed to the Examiner.

Pursuant to 35 U.S.C. 133, "[u]pon failure of the applicant to prosecute the application within six months after any action therein, of which notice has been given or mailed to the application, or within such shorter time, not less than thirty days, as fixed by the Director in such action, the application shall be regarded as abandoned by the parties thereto, unless it be shown to satisfactory of the Director that such delay was unavoidable.

The application was properly held abandoned and will remain abandoned until petitioner takes some other action in the above application to continue prosecution.

Petitioner is encouraged to consider filing a petition under 37 CFR 1.137(a) to revive an unavoidably abandoned application or a petition under 37 CFR 1.137(b) to revive an unintentionally abandoned application, instead of filing a renewed petition under 37 CFR 1.181.

A grantable petition under 37 CFR 1.137(a) must be accompanied by: (1) the required reply, unless previously filed; (2) the petition fee as set forth in 37 CFR 1.17(l); (3) a showing to the satisfaction of the Director that the entire delay in filing the required reply from the due date for the reply until the filing of a grantable petition pursuant to 37 CFR 1.137(a) was unavoidable; and (4) any terminal disclaimer (and fee as set forth in 37 CFR 1.20(d)) required pursuant to 37 CFR 1.137(d).

A grantable petition under 37 CFR 1.137(b) must be accompanied by: (1) the required reply, unless previously filed; (2) the petition fee as set forth in 37 CFR 1.17(m); (3) a statement that the entire delay in filing the required reply from the due date for the reply until the filing of a grantable petition pursuant to 37 CFR 1.137(b) was unintentional; and (4) any terminal disclaimer (and fee as set forth in 37 CFR 1.20(d)) required by 37 CFR 1.137(d). Where there is a question as to whether either the abandonment or the delay in filing a petition under 37 CFR 1.137 was unintentional, the Director may require additional information. See MPEP 711.03(c)(II)(C) and (D).

Public Law 97-247, § 3, 96 Stat. 317 (1982), which revised patent and trademark fees, amended 35 U.S.C. § 41(a)(7) to provide for the revival of an "unintentionally" abandoned application without a showing that the delay in prosecution or in late payment of the issue fee was "unavoidable." This amendment to 35 U.S.C. § 41(a)(7) has been implemented in 37 CFR 1.137(b). An "unintentional" petition under 37 CFR 1.137(b) must be accompanied by the $770 petition fee.

Further correspondence with respect to this matter should be delivered through one of the following mediums:

By mail: Mail Stop PETITIONS
Commissioner for Patents
Post Office Box 1450
Alexandria, VA 22313-1450

By hand: Customer Service Window
Mail Stop Petitions
Randolph Building
401 Dulany Street
Alexandria, VA 22314

By fax: (571) 273-8300
ATTN: Office of Petitions

By Internet: EFS-Web[1]

Any questions concerning this matter may be directed to the undersigned at (571) 272-3204.

/SDB/

Sherry D. Brinkley
Petitions Examiner
Office of Petitions

cc: JOSEPH R. CONDO
CONDO ROCCIA LLP
1650 MARKET STREET
PHILADELPHIA, PA 19103

[1] www.uspto.gov/ebc/efs_help.html (for help using EFS-Web call the Patent Electronic Business Center at (866) 217-9197)

UNITED STATES PATENT AND TRADEMARK OFFICE

Commissioner for Patents
United States Patent and Trademark Office
P.O. Box 1450
Alexandria, VA 22313-1450
www.uspto.gov

CONDO ROCCIA LLP
1650 MARKET STREET
SUITE 2200
PHILADELPHIA, PA 19103

MAILED
SEP 22 2011
OFFICE OF PETITIONS

In re Application of
Michael Sean Swanson, et al.
Application No. 11/261,977
Filed: October 28, 2005
Attorney Docket No.: DFPI-0007

ON PETITION

This is a decision on the petition, filed September 16, 2011, to revive the above-identified application under the provisions of 37 CFR 1.137(b).

The petition is not signed by a registered practitioner of record. However, in accordance with 37 CFR 1.34(a), the signature of Joseph R. Condo appearing on the petition shall constitute a representation to the United States Patent and Trademark Office that he is authorized to represent the particular party on whose behalf he acts.

The petition is **GRANTED**.

This application became abandoned for failure to submit corrected formal drawings on or before June 30, 2011, as required by the Notice of Allowability mailed March 31, 2011. A Notice of Abandonment was mailed on July 22, 2011. In response, on September 16, 2011, the present petition was filed.

The petition satisfies the requirements of 37 CFR 1.137(b) in that petitioner has supplied (1) the reply in the form of corrected formal drawings, (2) the petition fee of $1,620; and (3) an adequate statement of unintentional delay[1].

The application is being referred to the Office of Data Management to oversee the review of the drawings filed September 16, 2011 and for processing into a patent.

Telephone inquires related to this decision may be directed to the undersigned at (571) 272-3204. Telephone inquiries related to processing as a patent should be directed to (571) 272-4200

/SDB/

Sherry D. Brinkley
Petitions Examiner
Office of Petitions

[1] 37 CFR 1.137(b)(3) requires a statement that the entire delay in filing the required reply from the due date for the reply until the filing of a grantable petition pursuant to 37 CFR 1.137(b) was unintentional. While the statement is not made by an attorney or agent of record, such statement is being treated as having been made as the result of a reasonable inquiry into the facts and circumstances of such delay. See 37 CFR 10.18(b) and Changes to Patent Practice and Procedure; Final Rule Notice, 62 Fed. Reg. 53131, 53178 (October 10, 1997), 1203 Off. Gaz. Pat. Office 63, 103 (October 21, 1997

UNITED STATES PATENT AND TRADEMARK OFFICE

UNITED STATES DEPARTMENT OF COMMERCE
United States Patent and Trademark Office
Address: COMMISSIONER FOR PATENTS
P.O. Box 1450
Alexandria, Virginia 22313-1450
www.uspto.gov

NOVARTIS VACCINES AND DIAGNOSTICS INC.
INTELLECTUAL PROPERTY- X100B
P.O. BOX 8097
Emeryville, CA 94662-8097

Mail Date: 08/04/2010

Applicant	: Johanna M. Jansen	: DECISION ON REQUEST FOR
Patent Number	: 7642278	: RECALCULATION of PATENT
Issue Date	: 01/05/2010	: TERM ADJUSTMENT IN VIEW
Application No	: 11/261,995	: OF WYETH AND NOTICE OF INTENT TO
Filed	: 10/27/2005	: ISSUE CERTIFICATE OF CORRECTION
		:

The Request for Recalculation is **GRANTED** to the extent indicated.

The patent term adjustment has been determined to be **940** days. The USPTO will *sua sponte* issue a certificate of correction reflecting the amount of PTA days determined by the recalculation.

Prior to the issuance of the certificate of correction, the USPTO will afford patentee an opportunity to be heard and request reconsideration. Accordingly, patentee has **one month or thirty (30) days**, whichever is longer, to file a request for reconsideration of this patent term adjustment calculation. See 35 U.S.C. 154(b)(3)(B)(ii) and 37 CFR 1.322(a)(4). No extensions of time will be granted under 37 CFR 1.136.

Patentee should use document code PET.OP if electronically filing a request for reconsideration of this patent term adjustment calculation. The patentee must also include the information required by 37 CFR 1.705(b)(2) and the fee required by 37 CFR 1.18(e). If patentee does not file a timely request for reconsideration of this patent term adjustment calculation including the information required by 37 CFR 1.705(b)(2) and the fee required by 37 CFR 1.18(e), the USPTO will issue a certificate of correction reflecting the PTA determination noted above.

Patentee should be aware that in order to preserve the right to review in the United States District Court for the District of Columbia of the USPTO patent term adjustment determination, patentee must ensure that he or she also take the steps required under 35 U.S.C. 154(b)(4)(A) in a timely manner. Nothing in the request for recalculation should be construed as providing an alternative time frame for commencing a civil action under 35 U.S.C. 154(b)(4)(A).

Any questions concerning this decision should be directed to the Office of Patent Legal Administration at 571-272-7702.

UNITED STATES PATENT AND TRADEMARK OFFICE

Commissioner for Patents
United States Patent and Trademark Office
P.O. Box 1450
Alexandria, VA 22313-1450
www.uspto.gov

FOLEY & LARDNER LLP
975 Page Mill Road
Palo Alto, CA 94304

MAILED

JAN 18 2011

OFFICE OF PETITIONS

In re Application of	:	
Babak Nemati	:	
Application No. 11/262,082	:	DECISION ON PETITION
Filed: October 27, 2005	:	TO WITHDRAW
Attorney Docket No. 090402-0153	:	FROM RECORD
	:	

This is a decision on the Request to Withdraw as attorney or agent of record under 37 C.F.R. § 1.36(b), filed December 15, 2010.

The request is **NOT APPROVED** because it is moot.

A review of the file record indicates that the power of attorney to Foley & Lardner LLP has been revoked by the assignee of the patent application on January 7, 2011. Accordingly, the request to withdraw under 37 C.F.R. § 1.36(b) is moot.

All future communications from the Office will continue to be directed to the below-listed address until otherwise notified by applicant.

Telephone inquires concerning this decision should be directed to Terri Johnson at 571-272-2991.

/Terri Johnson/
Terri Johnson
Petitions Examiner
Office of Petitions

cc: **PROCOPIO, CORY, HARGREAVES & SAVITCH LLP**
525 B Street, Suite 2200
San Diego, CA 92101

UNITED STATES PATENT AND TRADEMARK OFFICE

Commissioner for Patents
United States Patent and Trademark Office
P.O. Box 1450
Alexandria, VA 22313-1450
www.uspto.gov

PHILIPS INTELLECTUAL PROPERTY & STANDARDS
P.O. BOX 3001
BRIARCLIFF MANOR NY 10510

MAILED
JAN 24 2012
OFFICE OF PETITIONS

In re Application of	:	
Gregory W. Eng, et al.	:	
Application No. 11/262,192	:	DECISION GRANTING PETITION
Filed: October 28, 2005	:	UNDER 37 CFR 1.313(c)(2)
Attorney Docket No. 007120US1	:	

This is a decision on the petition under 37 CFR 1.313(c)(2), filed January 23, 2012, to withdraw the above-identified application from issue after payment of the issue fee.

The petition is **GRANTED**.

The above-identified application is withdrawn from issue for consideration of a submission under 37 CFR 1.114 (request for continued examination). *See* 37 CFR 1.313(c)(2).

Petitioner is advised that the issue fee paid on January 9, 2012 cannot be refunded. If, however, this application is again allowed, petitioner may request that it be applied towards the issue fee required by the new Notice of Allowance.[1]

Telephone inquiries regarding this decision should be directed to undersigned at (571) 272-1642. All other inquiries concerning the examination or status of this application should be directed to the Technology Center.

This application is being referred to Technology Center AU 2875 for processing of the request for continued examination under 37 CFR 1.114 and for consideration of the concurrently filed information disclosure statement.

/AMW/
April M. Wise
Petitions Examiner
Office of Petitions

---

[1] *The request to apply the issue fee to the new Notice may be satisfied by completing and returning the new Part B – Fee(s) Transmittal Form (along with any balance due at the time of submission). Petitioner is advised that the Issue Fee Transmittal Form must be completed and timely submitted to avoid abandonment of the application.*

SPE RESPONSE FOR CERTIFICATE OF CORRECTION

Paper No.: _____

DATE : 5/13/11

TO SPE OF : ART UNIT 2612

SUBJECT : Request for Certificate of Correction for Appl. No.: 11262221 Patent No.: 7652575

CofC mailroom date: 03/04/10

Please respond to this request for a certificate of correction within 7 days.

FOR IFW FILES:

Please review the requested changes/corrections as shown in the **COCIN** document(s) in the IFW application image. No new matter should be introduced, nor should the scope or meaning of the claims be changed.

Please complete the response (see below) and forward the completed response to scanning using document code **COCX**.

FOR PAPER FILES:

Please review the requested changes/corrections as shown in the attached certificate of correction. Please complete this form (see below) and forward it with the file to:

Certificates of Correction Branch (CofC)
Randolph Square – 9D10-A
Palm Location 7580
You can fax the Directors/SPE response to 571-270-9990

Lamonte Newsome

Certificates of Correction Branch

571-272-3421

Thank You For Your Assistance

The request for issuing the above-identified correction(s) is hereby:

Note your decision on the appropriate box.

- ☒ **Approved** — All changes apply.
- ☐ **Approved in Part** — Specify below which changes **do not** apply.
- ☐ **Denied** — State the reasons for denial below.

Comments: OK to enter.

SPE RESPONSE FOR CERTIFICATE OF CORRECTION

DANIEL WU
SUPERVISORY PATENT EXAMINER

2612

SPE Art Unit

UNITED STATES PATENT AND TRADEMARK OFFICE

Commissioner for Patents
United States Patent and Trademark Office
P.O. Box 1450
Alexandria, VA 22313-1450
www.uspto.gov

PATENT DEPARTMENT (51851)
KILPATRICK STOCKTON LLP
1001 WEST FOURTH STREET
WINSTON-SALEM NC 27101

MAILED
SEP 24 2010
OFFICE OF PETITIONS

In re Application of	:	
MERRIL et al.	:	
Application No. 11/262,321	:	ON APPLICATION FOR
Filed: 10/27/2005	:	PATENT TERM ADJUSTMENT
Attorney Docket No. IMMR-IMD0004C	:	
(434701-592	:	

This is in response to the REQUEST FOR RECONSIDERATION OF PATENT TERM ADJUSTMENT DETERMINATION filed May 21, 2010, which is being treated as a petition under 37 CFR 1.705(b). Applicants submit that the correct patent term adjustment to be indicated on the patent is 639 days, not 525 days as calculated by the Office as of the mailing of the initial determination of patent term adjustment. Applicants seek this correction solely on the basis that the Office will take in excess of three years to issue this patent.

As the instant application for patent term adjustment requests reconsideration of the patent term adjustment as it relates to the Office's failure to issue the patent within three years of the filing date, the application for patent term adjustment under 37 CFR 1.705(b) is **DISMISSED as PREMATURE**.

Knowledge of the actual date the patent issues is required to calculate the amount, if any, of additional patent term patentees are entitled to for Office failure to issue the patent within three years. See 37 CFR 1.702(b). (This is true even where a request for continued examination (RCE) was filed). The computer will not undertake the § 1.702(b) calculation until the actual date of issuance of the patent has been determined.

Likewise, the computer will not calculate any further Office delay under 37 CFR 1.702(a)(4) or applicant delay under 37 CFR 1.704(c)(10) until the actual date of issuance of the patent has been determined. As such, the Office cannot make a determination on the correctness of the patent term adjustment until the patent has issued.

Requesting reconsideration of the patent term adjustment to be indicated on the patent under 37 CFR 1.705(b) based on the initial determination of patent term adjustment and a projected issuance date of the patent (or even the filing date of the request for continued examination) is premature. Accordingly, it is appropriate to dismiss such a request as premature.

Rather than file an application for patent term adjustment under 37 CFR 1.705(b) contesting the 37 CFR 1.702(b) calculation at the time of the mailing of the notice of allowance, applicants are advised that they may wait until the time of the issuance of the patent and file a request for reconsideration of the patent term adjustment pursuant to 37 CFR 1.705(d). As the USPTO does not calculate the amount of time earned pursuant to 37 CFR 1.702(b) until the time of the issuance of the patent, the Office will consider any request for reconsideration of the patent term adjustment due to an error in the calculation of 37 CFR 1.702(b) to be timely if the request for reconsideration is filed within two months of the issuance of the patent. However, as to all other bases for contesting the initial determination of patent term adjustment received with the notice of allowance, applicants must timely file an application for patent term adjustment prior to the payment of the issue fee.[1]

---

[1] For example, if applicants dispute both the calculation of patent term adjustment under 37 CFR 1.702(a)(1) for Office failure to mail a first Office action or notice of allowance not later than fourteen months after the date on which the application was filed, and under 37 CFR 1.702(b) for Office failure to issue a patent within three years of the actual filing date of the application, then applicants must still timely file an application for patent term adjustment prior to the payment of the issue fee to contest the calculation of Office delay in issuing a first Office action or notice of allowance. See 37 CFR 1.705(b) and 35 U.S.C. 154(b)(3)(B). A dispute as to the calculation of the § 1.702(a)(1) period raised on request for reconsideration of patent term adjustment under 37 CFR 1.705(d) will be dismissed as untimely filed.

The Office acknowledges submission of the $200.00 fee set forth in 37 CFR 1.18(e) for consideration of the application for patent term adjustment under 37 CFR 1.705(b).

Any request for reconsideration of the patent term adjustment indicated on the patent must be timely filed within two months after issuance pursuant to 37 CFR 1.705(d) and must include payment of the required fee under 37 CFR 1.18(e).

The Office of Data Management has been advised of this decision. This application is being referred to the Office of Data Management for issuance of the patent.

Telephone inquiries specific to this decision should be directed to the undersigned at (571) 272-3211.

C. T. Donnell

Christina Tartera Donnell
Senior Petitions Attorney
Office of Petitions

UNITED STATES PATENT AND TRADEMARK OFFICE

Commissioner for Patents
United States Patent and Trademark Office
P.O. Box 1450
Alexandria, VA 22313-1450
www.uspto.gov

VIERRA MAGEN/MICROSOFT CORPORATION
575 MARKET STREET, SUITE 2500
SAN FRANCISCO CA 94105

MAILED
JUL 08 2011
OFFICE OF PETITIONS

In re Application of	:	
Benita Howe, et al.	:	
Application No. 11/262,358	:	DECISION GRANTING PETITION
Filed: October 28, 2005	:	UNDER 37 CFR 1.313(c)(2)
Attorney Docket No. MSFT-01061US0	:	

This is a decision on the petition under 37 CFR 1.313(c)(2), filed, July 7, 2011 to withdraw the above-identified application from issue after payment of the issue fee.

The petition is **GRANTED**.

The above-identified application is withdrawn from issue for consideration of a submission under 37 CFR 1.114 (request for continued examination). *See* 37 CFR 1.313(c)(2).

Petitioner is advised that the issue fee paid on June 30, 2011 cannot be refunded. If, however, this application is again allowed, petitioner may request that it be applied towards the issue fee required by the new Notice of Allowance.[1]

Telephone inquiries should be directed to Terri Johnson at (571) 272-2991.

This application is being referred to Technology Center AU 3693 for processing of the request for continued examination under 37 CFR 1.114 and for consideration of the concurrently filed information disclosure statement.

/Terri Johnson/
Terri Johnson
Petitions Examiner
Office of Petitions

[1] *The request to apply the issue fee to the new Notice may be satisfied by completing and returning the new Part B – Fee(s) Transmittal Form (along with any balance due at the time of submission). Petitioner is advised that the Issue Fee Transmittal Form must be completed and timely submitted to avoid abandonment of the application.*

UNITED STATES PATENT AND TRADEMARK OFFICE

Commissioner for Patents
United States Patent and Trademark Office
P.O. Box 1450
Alexandria, VA 22313-1450
www.uspto.gov

YANG ZHANG
9730 ZELZAH AVE.
APT. 208
NORTHBRIDGE CA 91325

MAILED

SEP 10 2010

OFFICE OF PETITIONS

In re Application of :
Yanan Zhang :
Application No. 11/262,373 : DECISION ON PETITION
Filed: October 29, 2005 :
Attorney Docket No. **63102** :

This is a decision on the petition under the unintentional provisions of 37 CFR 1.137(b), filed March 23, 2010, to revive the above-identified application.

The petition is **GRANTED**.

The application became abandoned for failure to reply in a timely manner to the non-final Office action mailed, January 24, 2008, which set a shortened statutory period for reply of three (3) months. A one (1) month extension of time under the provisions of 37 CFR 1.136(a) was obtained. Accordingly, the application became abandoned on May 25, 2008.

The petition satisfies the requirements of 37 CFR 1.137(b) in that petitioner has supplied (1) the reply in the form of an amendment, (2) the petition fee of $810, and (3) a proper statement of unintentional delay. Accordingly, the response to the non-final office action of June 24, 2008 is accepted as having been unintentionally delayed.

It is not apparent whether the person signing the statement of unintentional delay was in a position to have firsthand or direct knowledge of the facts and circumstances of the delay at issue. Nevertheless, such statement is being treated as having been made as the result of a reasonable inquiry into the facts and circumstances of such delay. See 37 CFR 10.18(b) and Changes to Patent Practice and Procedure; Final Rule Notice, 62 Fed. Reg. 53131, 53178 (October 10, 1997), 1203 Off. Gaz. Pat. Office 63, 103 (October 21, 1997). In the event that such an inquiry has not been made, petitioner must make such an inquiry. If such inquiry results in the discovery that it is not correct that the entire delay in filing the required reply from the due date for the reply until the filing of a grantable petition pursuant to 37 CFR 1.137(b) was unintentional, petitioner must notify the Office.

There is no indication that the person signing the petition was ever given a power of attorney to prosecute the application. If the person signing the petition desires to receive future correspondence regarding this application, the appropriate power of attorney document must be submitted. While a courtesy copy of this decision is being mailed to the person signing the petition, all future correspondence will be directed to the address currently of record until appropriate instructions are received.

The power of attorney filed with the petition is not accepted. The Statement under 37 CFR 3.73(b) filed on October 29, 2005 is not sign by the CEO Howard Hao and it does not list the Reel and Frame.

Telephone inquiries concerning this decision should be directed to Tredelle Jackson at (571) 272-2783.

This application is being referred to Technology Center AU 3735 for appropriate action on the concurrently filed amendment.

Ramesh Krishnamurthy

Ramesh Krishnamurthy
Petitions Examiner
Office of Petitions

cc: **JEN-FENG LEE**
17800 CASTLETON STREET, #383
CITY OF INDUSTRY CA 91748

UNITED STATES PATENT AND TRADEMARK OFFICE

Commissioner for Patents
United States Patent and Trademark Office
P.O. Box 1450
Alexandria, VA 22313-1450
www.uspto.gov

Dag Johansen
2140 Valparaiso Ave
Menlo Park CA 94025

MAILED

SEP 24 2010

OFFICE OF PETITIONS

ON PETITION

In re Application of :
DeKlerk, et al. :
Application No. 11/262,490 :
Filed: October 29, 2005 :
Attorney Docket No. **FRNG.P0001**

This is a decision on the petition under 37 CFR 1.137(b), filed September 1, 2010, to revive the above-identified application.

The petition is **GRANTED**.

The above-identified application became abandoned for failure to file a timely and proper response to the non-final Office action mailed September 2, 2009, which set a shortened statutory period for reply of three months from its mailing date. Extensions of the time for response were available pursuant to 37 CFR 1.136. The application became abandoned on December 3, 2009. A Notice of Abandonment was mailed March 23, 2010.

The amendment filed September 1, 2010, is noted.

The application is being forwarded to Technology Center 3600, GAU 3624 for further processing.

Telephone inquiries concerning this decision should be directed to the undersigned at (571) 272-3222.

/Kenya A. McLaughlin/

Kenya A. McLaughlin
Petitions Attorney
Office of Petitions

SPE RESPONSE FOR CERTIFICATE OF CORRECTION

Paper No.: _____

DATE : 03/23/11

TO SPE OF : ART UNIT: 1625 Attn: ANDRES JANET L (SPE)

SUBJECT : Request for Certificate of Correction for Appl. No.: 11/262509 Patent No.: 7812037

C of C Mailroom date: 03/17/11

Please respond to this request for a certificate of correction within 7 days.

FOR IFW FILES:

Please review the requested changes/corrections as shown in the **COCIN** document(s) in the IFW application image. No new matter should be introduced, nor should the scope or meaning of the claims be changed.

Please complete the response (see below) and forward the completed response to scanning using document code **COCX**.

FOR PAPER FILES:

Please review the requested changes/corrections as shown in the attached certificate of correction. Please complete this form (see below) and forward it with the file to:

Certificates of Correction Branch (CofC)
Randolph Square – 9D10-A
Palm Location 7580

Tasneem Siddiqui
Certificates of Correction Branch
703-756-1593 or 703-756-1814

Thank You For Your Assistance

The request for issuing the above-identified correction(s) is hereby:
Note your decision on the appropriate box.

xApproved	**All** changes apply.
❑ **Approved in Part**	Specify below which changes **do not** apply.
❑ **Denied**	State the reasons for denial below.

Comments: _____

/Janet L. Andres/ 1625
SPE Art Unit

UNITED STATES PATENT AND TRADEMARK OFFICE

Commissioner for Patents
United States Patent and Trademark Office
P.O. Box 1450
Alexandria, VA 22313-1450
www.uspto.gov

NEIFELD IP LAW, PC
4813-B EISENHOWER AVENUE
ALEXANDRIA VA 22304

MAILED

SEP 27 2010

OFFICE OF PETITIONS

In re Application of
Tobinick
Application No. 11/262,528
Filed: October 28, 2005
Attorney Docket No. TACT0015U-US

DECISION ON PETITION
UNDER 37 CFR 1.78(a)(3)

This is a decision on the petition under 37 CFR 1.78(a)(3), filed March 16, 2010 and supplemented on June 7, 2010, to accept an unintentionally delayed claim under 35 U.S.C. §120 for the benefit of priority to the prior-filed nonprovisional application set forth in the concurrently filed amendment.

The petition is **GRANTED.**

A petition for acceptance of a claim for late priority under 37 CFR 1.78(a)(3) is only applicable to those applications filed on or after November 29, 2000. Further, the petition is appropriate only after the expiration of the period specified in 37 CFR 1.78(a)(2)(ii). In addition, the petition under 37 CFR 1.78(a)(3) must be accompanied by:

(1) the reference required by 35 U.S.C. § 120 and 37 CFR 1.78(a)(2)(i) of the prior-filed application, unless previously submitted;
(2) the surcharge set forth in § 1.17(t); and
(3) a statement that the entire delay between the date the claim was due under 37 CFR 1.78(a)(2)(ii) and the date the claim was filed was unintentional. The Director may require additional information where there is a question whether the delay was unintentional.

All of the above requirements having been satisfied, the late claim for priority under 35 U.S.C. § 120 is accepted as being unintentionally delayed.

The granting of the petition to accept the delayed benefit claim to the prior-filed application under 37 CFR 1.78(a)(3) should not be construed as meaning that this application is entitled to the benefit of the prior-filed application. In order for this application to be entitled to the benefit of the prior-filed application, all other requirements under 35 U.S.C. § 120 and 37 CFR 1.78(a)(1) and (a)(2) must be met. Similarly, the fact that the corrected Filing Receipt

accompanying this decision on petition includes the prior-filed application should not be construed as meaning that applicant is entitled to the claim for benefit of priority to the prior-filed application noted thereon. Accordingly, the examiner will, in due course, consider this benefit claim and determine whether the application is entitled to the benefit of the earlier filing date.

A corrected Filing Receipt, which includes the priority claim to the prior-filed nonprovisional application, accompanies this decision on petition.

Any inquiries concerning this decision may be directed to the undersigned at (571) 272-3230. All other inquiries concerning either the examination procedures or status of the application should be directed to the Technology Center.

This application is being forwarded to Technology Center Art Unit 1649 for consideration by the examiner of applicant's entitlement to claim benefit of priority under 35 U.S.C. § 120 to the prior-filed application.

Shirene Willis Brantley

Shirene Willis Brantley
Senior Petitions Attorney
Office of Petitions

UNITED STATES PATENT AND TRADEMARK OFFICE

UNITED STATES DEPARTMENT OF COMMERCE
United States Patent and Trademark Office
Address: COMMISSIONER FOR PATENTS
P.O. Box 1450
Alexandria, Virginia 22313-1450
www.uspto.gov

APPLICATION NUMBER	FILING or 371(c) DATE	GRP ART UNIT	FIL FEE REC'D	ATTY.DOCKET.NO	TOT CLAIMS	IND CLAIMS
11/262,528	10/28/2005	1649	1725	TACT0015U-US	29	13

CONFIRMATION NO. 9108

CORRECTED FILING RECEIPT

31518
NEIFELD IP LAW, PC
4813-B EISENHOWER AVENUE
ALEXANDRIA, VA 22304

OC000000043686883

Date Mailed: 09/24/2010

Receipt is acknowledged of this non-provisional patent application. The application will be taken up for examination in due course. Applicant will be notified as to the results of the examination. Any correspondence concerning the application must include the following identification information: the U.S. APPLICATION NUMBER, FILING DATE, NAME OF APPLICANT, and TITLE OF INVENTION. Fees transmitted by check or draft are subject to collection. Please verify the accuracy of the data presented on this receipt. **If an error is noted on this Filing Receipt, please submit a written request for a Filing Receipt Correction. Please provide a copy of this Filing Receipt with the changes noted thereon. If you received a "Notice to File Missing Parts" for this application, please submit any corrections to this Filing Receipt with your reply to the Notice. When the USPTO processes the reply to the Notice, the USPTO will generate another Filing Receipt incorporating the requested corrections**

Applicant(s)

Edward L. Tobinick, Los Angeles, CA;

Power of Attorney: The patent practitioners associated with Customer Number 31518

Domestic Priority data as claimed by applicant

This application is a DIV of 10/269,745 10/09/2002 PAT 6,982,089
which is a CIP of 10/236,097 09/06/2002 ABN
which is a CIP of 09/841,844 04/25/2001 PAT 6,537,549
which is a CIP of 09/826,976 04/05/2001 PAT 6,419,944
which is a CIP of 09/666,068 12/11/2000 PAT 6,379,666
which is a DIV of 09/476,643 12/31/1999 PAT 6,177,077
which is a CIP of 09/275,070 03/23/1999 PAT 6,015,557
which is a CIP of 09/256,388 02/24/1999 ABN

Foreign Applications

If Required, Foreign Filing License Granted: 11/30/2005

The country code and number of your priority application, to be used for filing abroad under the Paris Convention, is **US 11/262,528**

Projected Publication Date: Not Applicable

Non-Publication Request: No

Early Publication Request: No
**** SMALL ENTITY ****

Title

Cytokine antagonists for neurological and neuropsychiatric disorders

Preliminary Class

424

PROTECTING YOUR INVENTION OUTSIDE THE UNITED STATES

Since the rights granted by a U.S. patent extend only throughout the territory of the United States and have no effect in a foreign country, an inventor who wishes patent protection in another country must apply for a patent in a specific country or in regional patent offices. Applicants may wish to consider the filing of an international application under the Patent Cooperation Treaty (PCT). An international (PCT) application generally has the same effect as a regular national patent application in each PCT-member country. The PCT process **simplifies** the filing of patent applications on the same invention in member countries, but **does not result** in a grant of "an international patent" and does not eliminate the need of applicants to file additional documents and fees in countries where patent protection is desired.

Almost every country has its own patent law, and a person desiring a patent in a particular country must make an application for patent in that country in accordance with its particular laws. Since the laws of many countries differ in various respects from the patent law of the United States, applicants are advised to seek guidance from specific foreign countries to ensure that patent rights are not lost prematurely.

Applicants also are advised that in the case of inventions made in the United States, the Director of the USPTO must issue a license before applicants can apply for a patent in a foreign country. The filing of a U.S. patent application serves as a request for a foreign filing license. The application's filing receipt contains further information and guidance as to the status of applicant's license for foreign filing.

Applicants may wish to consult the USPTO booklet, "General Information Concerning Patents" (specifically, the section entitled "Treaties and Foreign Patents") for more information on timeframes and deadlines for filing foreign patent applications. The guide is available either by contacting the USPTO Contact Center at 800-786-9199, or it can be viewed on the USPTO website at http://www.uspto.gov/web/offices/pac/doc/general/index.html.

For information on preventing theft of your intellectual property (patents, trademarks and copyrights), you may wish to consult the U.S. Government website, http://www.stopfakes.gov. Part of a Department of Commerce initiative, this website includes self-help "toolkits" giving innovators guidance on how to protect intellectual property in specific countries such as China, Korea and Mexico. For questions regarding patent enforcement issues, applicants may call the U.S. Government hotline at 1-866-999-HALT (1-866-999-4158).

LICENSE FOR FOREIGN FILING UNDER

Title 35, United States Code, Section 184

Title 37, Code of Federal Regulations, 5.11 & 5.15

GRANTED

The applicant has been granted a license under 35 U.S.C. 184, if the phrase "IF REQUIRED, FOREIGN FILING LICENSE GRANTED" followed by a date appears on this form. Such licenses are issued in all applications where the conditions for issuance of a license have been met, regardless of whether or not a license may be required as

set forth in 37 CFR 5.15. The scope and limitations of this license are set forth in 37 CFR 5.15(a) unless an earlier license has been issued under 37 CFR 5.15(b). The license is subject to revocation upon written notification. The date indicated is the effective date of the license, unless an earlier license of similar scope has been granted under 37 CFR 5.13 or 5.14.

This license is to be retained by the licensee and may be used at any time on or after the effective date thereof unless it is revoked. This license is automatically transferred to any related applications(s) filed under 37 CFR 1.53(d). This license is not retroactive.

The grant of a license does not in any way lessen the responsibility of a licensee for the security of the subject matter as imposed by any Government contract or the provisions of existing laws relating to espionage and the national security or the export of technical data. Licensees should apprise themselves of current regulations especially with respect to certain countries, of other agencies, particularly the Office of Defense Trade Controls, Department of State (with respect to Arms, Munitions and Implements of War (22 CFR 121-128)); the Bureau of Industry and Security, Department of Commerce (15 CFR parts 730-774); the Office of Foreign AssetsControl, Department of Treasury (31 CFR Parts 500+) and the Department of Energy.

NOT GRANTED

No license under 35 U.S.C. 184 has been granted at this time, if the phrase "IF REQUIRED, FOREIGN FILING LICENSE GRANTED" DOES NOT appear on this form. Applicant may still petition for a license under 37 CFR 5.12, if a license is desired before the expiration of 6 months from the filing date of the application. If 6 months has lapsed from the filing date of this application and the licensee has not received any indication of a secrecy order under 35 U.S.C. 181, the licensee may foreign file the application pursuant to 37 CFR 5.15(b).

UNITED STATES PATENT AND TRADEMARK OFFICE

Commissioner for Patents
United States Patent and Trademark Office
P.O. Box 1450
Alexandria, VA 22313-1450
www.uspto.gov

COOPER & DUNHAM, LLP
30 ROCKEFELLER PLAZA, 20TH FLOOR
NEW YORK, NY 10112

MAILED

SEP 10 2010

OFFICE OF PETITIONS

In re Application of :
Marcus Philipp et al :
Application No. 11/262,594 : DECISION ON PETITION
Filed: October 31, 2005 :
Attorney Docket No. 2347/75182 :

This is a decision on the petitions, filed July 9, 2010, which is being treated as a petition under 37 CFR 1.181, requesting withdrawal of the holding of abandonment and petition under 37 CFR 1.137(b), to revive the above-identified application.

The petition under 37 CFR 1.181 is **DISMISSED**.

Any request for reconsideration of this decision should be filed within two (2) months from the mail date of this decision. *Note* 37 CFR 1.181(f). The request for reconsideration should include a cover letter and be entitled as a "Renewed Petition under 37 CFR 1.181 to Withdraw the Holding of Abandonment."

This application was held abandoned for failure to timely respond to the Office action of October 19, 2009, which set a three (3) month shortened statutory period for reply. A reply was due on or before January 19, 2010.

The Declaration of Randolph McQueen submitted with the petitions state,

5. Our offices officially moved locations on November 24, 2008 from 1185 Avenue of the Americas, New York, N.Y. 10036 to our present address of 30 Rockefeller Plaza, New York, New York 10112. Since that time, our mail addressed to our previous Avenue of the Americas address has been forwarded to our current address by the United States Post Office. Received mail is then forwarded on to the Docketing department, where each piece of mail is opened, docketed and distributed to each attorney.

6. On December 4, 2008, our office submitted a Request for Change of Correspondence Address in this case to update PTO records to reflect our office moving from 1185 Avenue of the Americas to our current address 30 Rockefeller Plaza.

Office records show an Office action was mailed on October 19, 2009 to 1185 Avenue of the Americas, New York, NY 10036. However, on November 2, 2009, this Office action was return to sender / unable to

forward. On May 26, 2010 a Notice of Abandonment was mailed and this Notice was also return to sender / unable to forward.

The USPTO records does not show the December 4, 2008 Request for Change of Correspondence Address; therefore, the Office action and the Notice of Abandonment were properly mailed to the correspondence address of record. A courtesy copy of the October 19, 2009 Office action and the May 26, 2010 Notice of Abandonment is being mailed with this decision.

The Office received a Change of Correspondence Address on July 12, 2010, which is the above-listed correspondence address of record.

The petition under 37 CFR 1.137(b) is **DISMISSED.**

A petition to revive cannot be treated where there is an outstanding requirement. In the instant case, there was no response to the October 19, 2009 Office action. Accordingly, the petition to revive cannot be treated until the response to the Office action is received.

Further correspondence with respect to this matter should be addressed as follows:

By Mail: Mail Stop PETITION
Commissioner for Patents
P. O. Box 1450
Alexandria, VA 22313-1450

By hand: U. S. Patent and Trademark Office
Customer Service Window, Mail Stop Petitions
Randolph Building
401 Dulany Street
Alexandria, VA 22314

By facsimile: **(571) 273-8300**
Attn: Office of Petitions

Inquiries concerning this decision should be directed to Irvin Dingle at (571) 272-3210.

Irvin Dingle
Petitions Examiner
Office of Petitions

Attachments: A courtesy copy of the October 19, 2009 Office action and the May 26, 2010 Notice of Abandonment.

UNITED STATES PATENT AND TRADEMARK OFFICE

UNITED STATES DEPARTMENT OF COMMERCE
United States Patent and Trademark Office
Address: COMMISSIONER FOR PATENTS
P.O. Box 1450
Alexandria, Virginia 22313-1450
www.uspto.gov

APPLICATION NO.	FILING DATE	FIRST NAMED INVENTOR	ATTORNEY DOCKET NO.	CONFIRMATION NO.
11/262,594	10/31/2005	Marcus Philipp	2347/75182	3741

7590 10/19/2009

RICHARD F. JAWORSKI
Cooper & Dunham LLP
1185 Avenue of the Americas
New York, NY 10036

EXAMINER
YIP, JACK

ART UNIT	PAPER NUMBER
3715	

MAIL DATE	DELIVERY MODE
10/19/2009	PAPER

Please find below and/or attached an Office communication concerning this application or proceeding.

The time period for reply, if any, is set in the attached communication.

Office Action Summary	Application No.	Applicant(s)
	11/262,594	PHILIPP ET AL.
	Examiner	Art Unit
	JACK YIP	3715

-- The MAILING DATE of this communication appears on the cover sheet with the correspondence address --

Period for Reply

A SHORTENED STATUTORY PERIOD FOR REPLY IS SET TO EXPIRE 3 MONTH(S) OR THIRTY (30) DAYS, WHICHEVER IS LONGER, FROM THE MAILING DATE OF THIS COMMUNICATION.

- Extensions of time may be available under the provisions of 37 CFR 1.136(a). In no event, however, may a reply be timely filed after SIX (6) MONTHS from the mailing date of this communication.
- If NO period for reply is specified above, the maximum statutory period will apply and will expire SIX (6) MONTHS from the mailing date of this communication.
- Failure to reply within the set or extended period for reply will, by statute, cause the application to become ABANDONED (35 U.S.C. § 133). Any reply received by the Office later than three months after the mailing date of this communication, even if timely filed, may reduce any earned patent term adjustment. See 37 CFR 1.704(b).

Status

1)☒ Responsive to communication(s) filed on 22 June 2009.

2a)☐ This action is **FINAL**. 2b)☒ This action is non-final.

3)☐ Since this application is in condition for allowance except for formal matters, prosecution as to the merits is closed in accordance with the practice under *Ex parte Quayle*, 1935 C.D. 11, 453 O.G. 213.

Disposition of Claims

4)☒ Claim(s) 1-30 is/are pending in the application.

4a) Of the above claim(s) _____ is/are withdrawn from consideration.

5)☐ Claim(s) _____ is/are allowed.

6)☒ Claim(s) 1-30 is/are rejected.

7)☐ Claim(s) _____ is/are objected to.

8)☐ Claim(s) _____ are subject to restriction and/or election requirement.

Application Papers

9)☐ The specification is objected to by the Examiner.

10)☐ The drawing(s) filed on _____ is/are: a)☐ accepted or b)☐ objected to by the Examiner.

Applicant may not request that any objection to the drawing(s) be held in abeyance. See 37 CFR 1.85(a).

Replacement drawing sheet(s) including the correction is required if the drawing(s) is objected to. See 37 CFR 1.121(d).

11)☐ The oath or declaration is objected to by the Examiner. Note the attached Office Action or form PTO-152.

Priority under 35 U.S.C. § 119

12)☐ Acknowledgment is made of a claim for foreign priority under 35 U.S.C. § 119(a)-(d) or (f).

a)☐ All b)☐ Some * c)☐ None of:

1.☐ Certified copies of the priority documents have been received.

2.☐ Certified copies of the priority documents have been received in Application No. _____.

3.☐ Copies of the certified copies of the priority documents have been received in this National Stage application from the International Bureau (PCT Rule 17.2(a)).

* See the attached detailed Office action for a list of the certified copies not received.

Attachment(s)

1) ☐ Notice of References Cited (PTO-892)

2) ☐ Notice of Draftsperson's Patent Drawing Review (PTO-948)

3) ☐ Information Disclosure Statement(s) (PTO/SB/08) Paper No(s)/Mail Date _____.

4) ☐ Interview Summary (PTO-413) Paper No(s)/Mail Date. _____ .

5) ☐ Notice of Informal Patent Application

6) ☐ Other: _____.

DETAILED ACTION

Response to Amendment

1. In response to the amendment filed 6/22/2009; claims 1 - 30 are pending.

Claim Rejections - 35 USC § 112

2. The following is a quotation of the second paragraph of 35 U.S.C. 112:

> The specification shall conclude with one or more claims particularly pointing out and distinctly claiming the subject matter which the applicant regards as his invention.

3. Claims 4 - 6, 11 - 16, 21 - 26 are rejected under 35 U.S.C. 112, second paragraph, as being indefinite for failing to particularly point out and distinctly claim the subject matter which applicant regards as the invention.

4. Claims 4, 11, 14, 21 and 24 state "... **a user** to define a plurality of categories that can be assigned by **a user** ... **a user** to associate system ... " It's unclear if there is more than one user.

Claim Rejections - 35 USC § 102

5. The following is a quotation of the appropriate paragraphs of 35 U.S.C. 102 that form the basis for the rejections under this section made in this Office action:

> A person shall be entitled to a patent unless –
>
> (b) the invention was patented or described in a printed publication in this or a foreign country or in public use or on sale in this country, more than one year prior to the date of application for patent in the United States.

6. Claims 1 - 30 are rejected under 35 U.S.C. 102(b) as being anticipated by eCollege as evident by Instructor User Guide (March 2004) denoted hereinafter as eCollege.

eCollege discloses:

Examiner, Art Unit 3715

<u>Regarding Claims 1, 4, 7, 11, 14, 17, 21, 24, 27:</u>

[Claim 1] *A method for changing course content in an electronic learning system, comprising:* (eCollege, pg 24 - 126, "Course Setup, Course Content, Course Tools")

defining a plurality of categories (eCollege, pg 24 - 126, pg 4 - 5 i.e. "Posting Announcements, Creating a Calendar, Adding Units to your Course, Adding Content, Adding Test or Multimedia Items, Adding Exams to your course, Using Threaded Discussions, Adding Third-party CoursePack Content Items, Sharing Documents, Creating a Course Webliography... etc.") *that can be assigned* <u>*by a user*</u> (eCollege, pg 6, "an instructor") *to changes that may be made to the course content in the electronic learning system* (eCollege, pg 24 - 126, "Course Content") *based on at least one characteristic* (major change, minor change, grammatical change and added material change) *of the changes that may be made to the course content* (eCollege, pg 24 - 126, pg 4 - 5 i.e. "Posting Announcements, Creating a Calendar, Adding Units to your Course, Adding Content, Adding Test or Multimedia Items, Adding Exams to your course, Using Threaded Discussions, Adding Third-party CoursePack Content Items, Sharing Documents, Creating a Course Webliography... etc.") *that can be assigned* <u>*by a user*</u> (eCollege, pg 6, "an instructor"); *and*

associating system behaviors (automatic update) to each of the plurality of categories, wherein the system behaviors include steps to be performed by the electronic learning system <u>*without further user action*</u> *when* <u>*a change is made to the course content and*</u> *one of the plurality categories is assigned to changes actually being made to the course content* <u>*by the user*</u> (eCollege, pg 24 - 26, "Scheduling Course Content"; pg 46; pg 49 - 50; pg 66; pg 88 - 89; eCollege teaches a calendar feature which will perform a "administrative" calendar tasks for an instructor's course (eCollege, pg 22, "Creating a Calendar"). eCollege further teaches an instructor can add course events to the calendar that will show up on the calendar for anyone enrolled in the course (eCollege, pg 24 - 26; pg 49 - 50, "Schedule"). Therefore, the task or course event can be performed by eCollege without further instructor action.).

[Claim 4] *A user interface for use in changing course content in an electronic learning system* (eCollege, pg 24 - 126, "Course Setup, Course Content, Course Tools"), *comprising:*

prompting a user to define a plurality of categories that can be assigned <u>*by a user*</u> *to changes that may be made to the course content in the electronic learning system based on at least one characteristic of the changes that may be made to the course content; and*

prompting the user to associate system behaviors to each of the plurality of categories, wherein the system behaviors include steps to be performed by the electronic learning system without further user action when a change is made to the course content and one of the plurality categories is assigned to changes actually being made to the course content by the user. (See Claim 1 above)

[Claim 7] *A method for modifying course content in an electronic learning system, comprising:* (eCollege, pg 24 - 126, "Course Setup, Course Content, Course Tools")

prompting a user (eCollege, pg 6, "an instructor") *to sign onto the electronic learning system;* (eCollege, pg 6, "log in")

prompting the user to upload updates to the course content; (eCollege, pg 44 - 93, "uploading")

prompting the user to select a category of changes for the updates to the course content (eCollege, pg 24 - 126, pg 4 - 5 i.e. "Posting Announcements, Creating a Calendar, Adding Units to your Course, Adding Content, Adding Test or Multimedia Items, Adding Exams to your course, Using Threaded Discussions, Adding Third-party CoursePack Content Items, Sharing Documents, Creating a Course Webliography... etc."), *the category of changes having at least one predefined system behavior associated therewith* (eCollege, pg 24 - 26, "Scheduling Course Content"; pg 46; pg 49 - 50; pg 66; pg 88 - 89, "scheduler"); *and*

performing the at least one predefined system behavior based on the category of changes selected by the user, wherein the system behaviors comprise actions to be performed by the electronic learning system without further user action, when a change is made to the course content and a category is assigned to the change by the user (eCollege, pg 24 - 26, "Scheduling Course Content"; pg 46; pg 49 - 50; pg 66; pg 88 - 89; eCollege teaches a calendar feature which will perform a "administrative" calendar tasks for an instructor's course (eCollege, pg 22, "Creating a Calendar"). eCollege further teaches an instructor can add course events to the calendar that will show up on the calendar for anyone enrolled in the course (eCollege, pg 24 - 26; pg 49 - 50, "Schedule"). Therefore, the task or course event can be performed by eCollege without further instructor action.).

[Claim 11] *A system for changing course content in an electronic learning system, comprising:* (eCollege, pg 24 - 126, "Course Setup, Course Content, Course Tools")

a system for allowing a user to define a plurality of categories that can be assigned by a user to changes that may be made to the course content in the electronic learning system based on at least on at least one characteristic of the changes that may be made to the course content; and

a system for allowing a user to associate system behaviors to each of the plurality of categories, wherein the system behaviors include steps to be performed by the electronic learning system without further user action when a change is made to the course content and one of the plurality categories is assigned to changes actually being made to the course content by the user. (See Claim 1 above)

[Claim 14] *A system for providing a user interface for use in changing course content in an electronic learning system, comprising:* (eCollege, pg 24 - 126, "Course Setup, Course Content, Course Tools")

a system for prompting a user to define a plurality of categories that can be assigned by a user to changes that may be made to the course content in the electronic learning system based on at least on at least one characteristic of the changes that may be made to the course content; and

a system for prompting the user to associate system behaviors to each of the plurality of categories, wherein the system behaviors include steps to be performed by the electronic learning system without further user action when a change is made to the course content and one of the plurality categories is assigned to changes actually being made to the course content by the user. (See Claim 1 above)

[Claim 17] *A system for modifying course content in an electronic learning system, comprising:* (eCollege, pg 24 - 126, "Course Setup, Course Content, Course Tools")

a system for prompting a user to sign onto the electronic learning system;

a system for prompting the user to upload updates to the course content;

a system for prompting the user to select a category of changes for the updates to the course content, the category of changes having at least one predefined system behavior associated therewith; and

a system for performing the at least one predefined system behavior based on the category of changes selected by the user, wherein the system behaviors comprise actions to be performed by the electronic learning system without further user action, when a change is made to the course content and a category is assigned to the change by the user. (See Claim 7 above)

[Claim 21] *A computer recording medium including computer executable code for changing course content in an electronic learning system, comprising:* (eCollege, pg 24 - 126, "Course Setup, Course Content, Course Tools")

code for allowing a user to define a plurality of categories that can be assigned by a user to changes that may be made to the course content in the electronic learning system based on at least on at least one characteristic of the changes that may be made to the course content; and

code for allowing the user to associate system behaviors to each of the plurality of categories, wherein the system behaviors include steps to be performed by the electronic learning system without further use action when a change is made to the course content and one of the plurality categories is assigned to changes actually being made to the course content by the user. (See Claim 1 above)

[Claim 24] *A computer recording medium including computer executable code for providing a user interface for use in versioning course content in an electronic learning system* (eCollege, pg 24 - 126, "Course Setup, Course Content, Course Tools"), *comprising:*

code for prompting a user to define a plurality of categories that can be assigned by a user to changes be made to the course content in the electronic learning system based on at least on at least one characteristic of the changes that may be made to the course content; and

code for prompting the user to associate system behaviors to each of the plurality of categories, wherein the system behaviors include steps to be performed by the electronic learning system without

further user action when a change is made to the course content and one of the plurality categories is assigned to changes actually being made to the course content by the user. (See Claim 1 above)

[Claim 27] *A computer recording medium including computer executable code for modifying course content in an electronic learning system, comprising:* (eCollege, pg 24 - 126, "Course Setup, Course Content, Course Tools")

code for prompting a user to sign onto the electronic learning system;

code for prompting the user to upload updates to the course content;

code for prompting the user to select a category of changes for the updates to the course content, the category of changes having at least one predefined system behavior associated therewith; and

code for performing the at least one predefined system behavior based on the category of changes selected by the user, wherein the system behaviors comprise actions to be performed by the electronic learning system without further user action, when a change is made to the course content and a category is assigned to the change by the user. (See Claim 7 above)

Regarding Claims 2, 5, 9, 12, 15, 19, 22, 25, 29:

[Claim 2] *The method for changing course content in an electronic learning system, as recited in claim 1, wherein the plurality of categories comprise major change, minor change* (eCollege, pg 4, "Adding Units to your Course, Adding Course, Adding Text or Multimedia Items, Adding Third-party CoursePack Content Items,"; pg 44 - 93), grammatical change (eCollege, pg 62 - 65, "Using Microsoft Office Tools as Content Items", pg 64, "Click the 'Spelling and Grammar' tab";) *and added material change* (eCollege, pg 4, "Adding Units to your Course, Adding Course, Adding Text or Multimedia Items, Adding Third-party CoursePack Content Items,"; pg 44 - 93).

[Claims 5, 9, 12, 15, 19, 22, 25, 29]

(See Claim 2 above)

Regarding Claims 3, 6, 10, 13, 16, 20, 23, 26, 30:

[Claim 3] *The method for changing course content in an electronic learning system, as recited in claim 1, wherein the system behaviors are selected from at least one of* ***automatic update****, manual update, delete learning progress, preserve learning progress, new version for free and charge for new version* (eCollege, pg 24 - 26; pg 46; pg 49 - 50; pg 66; pg 88 - 89, "Schedule").

[Claims 6, 10, 13, 16, 20, 23, 26, 30]

(See Claim 3 above)

Regarding Claims 8, 18, 28:

[Claim 8] The method for modifying course content in an electronic learning system as recited in claim 7, wherein the user comprises one of an author of the course content being modified (eCollege, pg 44 - 93, "Course Content") and an administrator of the electronic learning system (eCollege, pg 6, "Course Admin").

[Claims 18, 28]

(See Claim 8 above)

Response to Arguments

7. Applicant's arguments filed 6/22/2009 have been fully considered but they are not persuasive.

Re claims 1 - 30:

8. Applicant argues that the eCollege guide does not disclose a plurality of categories that can be assigned by a user to changes that may be made to the course content. The examiner respectfully disagrees. The examiner interprets a plurality of categories as the following: Announcements, Calendar, Units, Content, Test or Multimedia Items, Exams, Threaded Discussions, Third-party CoursePack Content Items, Documents, Course Webliography... etc as disclose by the guide (eCollege, pg 24 - 126, pg 4 - 5 i.e. "Posting Announcements, Creating a Calendar, Adding Units to your Course, Adding Content, Adding

Test or Multimedia Items, Adding Exams to your course, Using Threaded Discussions, Adding Third-party CoursePack Content Items, Sharing Documents, Creating a Course Webliography... ").

9. Applicant further argues that the eCollege guide is silent as to how or when the student pays the access fee and the system behaviors (automatic update) include steps to be performed by the electronic learning system without further user action. The examiner interprets "the user" is an instructor and an instructor can add course events to the calendar that will show up on the calendar for anyone enrolled in the course (eCollege, pg 24 - 26; pg 49 - 50, "Schedule") and therefore the course events will show up without further user action.

Conclusion

Any inquiry concerning this communication or earlier communications from the examiner should be directed to JACK YIP whose telephone number is (571)270-5048. The examiner can normally be reached on Monday - Friday 9:30am - 5:00pm EST.

If attempts to reach the examiner by telephone are unsuccessful, the examiner's supervisor, Xuan Thai can be reached on (571)272-7147. The fax phone number for the organization where this application or proceeding is assigned is 571-273-8300.

Information regarding the status of an application may be obtained from the Patent Application Information Retrieval (PAIR) system. Status information for published applications may be obtained from either Private PAIR or Public PAIR. Status information for unpublished applications is available through Private PAIR only. For more information about the PAIR system, see http://pair-direct.uspto.gov. Should you have questions on access to the Private PAIR system, contact the Electronic Business Center (EBC) at 866-217-9197 (toll-free). If you would like assistance from a USPTO Customer Service Representative or access to the automated information system, call 800-786-9199 (IN USA OR CANADA) or 571-272-1000.

/J. Y./
Examiner, Art Unit 3715

/XUAN M. THAI/
Supervisory Patent Examiner, Art Unit 3715

UNITED STATES PATENT AND TRADEMARK OFFICE

UNITED STATES DEPARTMENT OF COMMERCE
United States Patent and Trademark Office
Address: COMMISSIONER FOR PATENTS
P.O. Box 1450
Alexandria, Virginia 22313-1450
www.uspto.gov

APPLICATION NO.	FILING DATE	FIRST NAMED INVENTOR	ATTORNEY DOCKET NO.	CONFIRMATION NO.
11/262,594	10/31/2005	Marcus Philipp	2347/75182	3741

7590 05/26/2010

RICHARD F. JAWORSKI
Cooper & Dunham LLP
1185 Avenue of the Americas
New York, NY 10036

EXAMINER
YIP, JACK

ART UNIT	PAPER NUMBER
3715	

MAIL DATE	DELIVERY MODE
05/26/2010	PAPER

Please find below and/or attached an Office communication concerning this application or proceeding.

The time period for reply, if any, is set in the attached communication.

Notice of Abandonment	Application No.	Applicant(s)	
	11/262,594	PHILIPP ET AL.	
	Examiner	Art Unit	
	JACK YIP	3715	

-- The MAILING DATE of this communication appears on the cover sheet with the correspondence address--

This application is abandoned in view of:

1. ☒ Applicant's failure to timely file a proper reply to the Office letter mailed on *19 October 2009*.
   (a) ☐ A reply was received on _____ (with a Certificate of Mailing or Transmission dated _____), which is after the expiration of the period for reply (including a total extension of time of _____ month(s)) which expired on _____.
   (b) ☐ A proposed reply was received on _____, but it does not constitute a proper reply under 37 CFR 1.113 (a) to the final rejection.
   (A proper reply under 37 CFR 1.113 to a final rejection consists only of: (1) a timely filed amendment which places the application in condition for allowance; (2) a timely filed Notice of Appeal (with appeal fee); or (3) a timely filed Request for Continued Examination (RCE) in compliance with 37 CFR 1.114).
   (c) ☐ A reply was received on _____ but it does not constitute a proper reply, or a bona fide attempt at a proper reply, to the non-final rejection. See 37 CFR 1.85(a) and 1.111. (See explanation in box 7 below).
   (d) ☒ No reply has been received.

2. ☐ Applicant's failure to timely pay the required issue fee and publication fee, if applicable, within the statutory period of three months from the mailing date of the Notice of Allowance (PTOL-85).
   (a) ☐ The issue fee and publication fee, if applicable, was received on _____ (with a Certificate of Mailing or Transmission dated _____), which is after the expiration of the statutory period for payment of the issue fee (and publication fee) set in the Notice of Allowance (PTOL-85).
   (b) ☐ The submitted fee of $_____ is insufficient. A balance of $_____ is due.
   The issue fee required by 37 CFR 1.18 is $_____. The publication fee, if required by 37 CFR 1.18(d), is $_____.
   (c) ☐ The issue fee and publication fee, if applicable, has not been received.

3. ☐ Applicant's failure to timely file corrected drawings as required by, and within the three-month period set in, the Notice of Allowability (PTO-37).
   (a) ☐ Proposed corrected drawings were received on _____ (with a Certificate of Mailing or Transmission dated _____), which is after the expiration of the period for reply.
   (b) ☐ No corrected drawings have been received.

4. ☐ The letter of express abandonment which is signed by the attorney or agent of record, the assignee of the entire interest, or all of the applicants.

5. ☐ The letter of express abandonment which is signed by an attorney or agent (acting in a representative capacity under 37 CFR 1.34(a)) upon the filing of a continuing application.

6. ☐ The decision by the Board of Patent Appeals and Interference rendered on _____ and because the period for seeking court review of the decision has expired and there are no allowed claims.

7. ☐ The reason(s) below:

/XUAN M. THAI/
Supervisory Patent Examiner, Art Unit 3715

Petitions to revive under 37 CFR 1.137(a) or (b), or requests to withdraw the holding of abandonment under 37 CFR 1.181, should be promptly filed to minimize any negative effects on patent term.

UNITED STATES PATENT AND TRADEMARK OFFICE

Commissioner for Patents
United States Patent and Trademark Office
P.O. Box 1450
Alexandria, VA 22313-1450
www.uspto.gov

MAILED

OCT 21 2010

OFFICE OF PETITIONS

COOPER & DUNHAM, LLP
30 ROCKEFELLER PLAZA
20TH FLOOR
NEW YORK, NY 10112

In re Application of	:	
Marcus Philipp et al	:	
Application No. 11/262,594	:	ON PETITION
Filed: October 31, 2005	:	
Attorney Docket No. 2347/75182	:	

This is a decision on the petition under 37 CFR 1.137(b), filed September 28, 2010, to revive the above-identified application.

The petition is **GRANTED.**

The above-identified application became abandoned for failure to reply in a timely manner to the non-final Office action mailed October 19, 2009, which set a shortened statutory period for reply of three (3) months. No extension of time under the provisions of 37 CFR 1.136(a) were obtained. Accordingly, the above-identified application became abandoned on January 20, 2010.

Telephone inquiries concerning this decision should be directed to Irvin Dingle at (571) 272-3210.

This matter is being referred to Technology Center AU 3715 for further processing.

Irvin Dingle
Petitions Examiner
Office of Petitions

UNITED STATES PATENT AND TRADEMARK OFFICE

Commissioner for Patents
United States Patent and Trademark Office
P.O. Box 1450
Alexandria, VA 22313-1450
www.uspto.gov

FITCH EVEN TABIN & FLANNERY
120 SOUTH LASALLE STREET
SUITE 1600
CHICAGO IL 60603-3406

MAILED
NOV 15 2010
OFFICE OF PETITIONS

In re Application of	:	
Chiao-Wei LEE et al.	:	
Application No. 11/262,626	:	DECISION ON PETITION
Filed: October 31, 2005	:	
Attorney Docket No. 94618	:	

This is a decision on the petition under the unintentional provisions of 37 CFR 1.137(b), filed October 12, 2010, to revive the above-identified application.

The petition is **GRANTED**.

The application became abandoned for failure to reply in a timely manner to the non-final Office action mailed, March 05, 2010, which set a shortened statutory period for reply of three (3) months. No extensions of time under the provisions of 37 CFR 1.136(a) were obtained. Accordingly, the application became abandoned on June 06, 2010.

The petition satisfies the requirements of 37 CFR 1.137(b) in that petitioner has supplied (1) the reply in the form of an amendment, (2) the petition fee of $1,620.00, and (3) a proper statement of unintentional delay. Accordingly, the reply to the non-final Office action of March 05, 2010 is accepted as having been unintentionally delayed.

37 CFR 1.137(b)(3) requires a statement that "the entire delay in filing the required reply from the due date for the reply until the filing of a grantable petition pursuant to 37 CFR 1.137(b) was unintentional." Since the statement appearing in the petition varies from the language required by 37 CFR 1.137(b)(3), the statement is being construed as the required statement. Petitioner must notify the Office if this is **not** a correct reading of the statement appearing in the petition.

Telephone inquiries concerning this decision should be directed to the undersigned at (571)272-4231.

This application is being referred to Technology Center AU 2614 for appropriate action by the Examiner in the normal course of business on the reply received.

Michelle R. Eason
Paralegal Specialist
Office of Petitions

UNITED STATES PATENT AND TRADEMARK OFFICE

Commissioner for Patents
United States Patent and Trademark Office
P.O. Box 1450
Alexandria, VA 22313-1450
www.uspto.gov

CLARK & ELBING LLP
101 FEDERAL STREET
BOSTON, MA 02110

MAILED

DEC 07 2010

OFFICE OF PETITIONS

In re Application of :
Steven D. Freedman :
Application No. 11/262,645 :
Filed: October 31, 2005 :
Attorney Docket No. 01948/096003 :

ON PETITION

This is a decision on the petition under 37 CFR 1.137(b), filed November 10, 2010 to revive the above-identified application.

The petition is **GRANTED.**

The above-identified application became abandoned for failure to reply in a timely manner to the non-final Office action mailed April 20, 2009, which set a shortened statutory period for reply of three (3) months. No extension of time under the provisions of 37 CFR 1.136(a) was obtained. Accordingly, the above-identified application became abandoned on July 21, 2009.

An extension of time under 37 CFR 1.136 must be filed prior to the expiration of the maximum extendable period for reply. See In re Application of S., 8 USPQ2d 1630, 1631 (Comm'r Pats. 1988). Accordingly, since the $555 extension of time submitted with the petition on November 10, 2010 was subsequent to the maximum extendable period for reply, this fee is unnecessary and will be credit to petitioner's deposit account.

The file does not indicate a change of address has been submitted, although the address given on the petition differs from the address of record. If appropriate, a change of address should be filed in accordance with MPEP 601.03. A courtesy copy of this decision is being mailed to the address given on the petition; however, the Office will mail all future correspondence solely to the address of record.

Telephone inquiries concerning this decision should be directed to Irvin Dingle at (571) 272-3210.

This matter is being referred to Technology Center AU 1614 for further processing.

Irvin Dingle
Petitions Examiner
Office of Petitions

cc: Stan Mah, Ph.D.
Senior Associate
Technology Ventures Office, BIDMC
330 Brookline Ave.
Boston, MA 02215

UNITED STATES PATENT AND TRADEMARK OFFICE

Commissioner for Patents
United States Patent and Trademark Office
P.O. Box 1450
Alexandria, VA 22313-1450
www.uspto.gov

In re Patent No. 7310827
Issue Date: December 25,2007
Application No. 11262872
Filed: October 31,2005
Attorney Docket No. CIEMA.P1

:
:DECISION GRANTING PETITION
:UNDER 37 CFR 1.378(c)
:

This is a decision on the electronic petition, filed February 28,2012 ,under 37 CFR 1.378(c) to accept the unintentionally delayed payment of the 3.5 year maintenance fee for the above-identified patent.

The petition is **GRANTED**.

The maintenance fee is accepted, and the above-identified patent reinstated as of February 28,2012 . This decision also constitutes notice that the fee has been accepted. An electronic copy of the petition and this decision has been created as an entry in the Image File Wrapper. Nevertheless, petitioner should print and retain an independent copy.

Telephone inquiries related to this electronic decision should be directed to the Electronic Business Center at 1-866-217-9197.

PTO/SB/66 (03-09)
Approved for use through 03/31/2012. OMB 0651-0016
U.S. Patent and Trademark Office: U.S. DEPARTMENT OF COMMERCE
Under the Paperwork Reduction Act of 1995, no persons are required to respond to a collection of information unless it displays valid OMB control number.

PETITION TO ACCEPT UNINTENTIONALLY DELAYED PAYMENT OF MAINTENANCE FEE IN AN EXPIRED PATENT (37 CFR 1.378(c))

Patent Number	Issue Date (YYYY-MM-DD)	Application Number	Filing Date (YYYY-MM-DD)	Docket Number (if applicable)
7,310,827	2007-12-25	11/262,872	2005-10-31	001730/0004

CAUTION: Maintenance fee (and surcharge, if any) payment must correctly identify: (1) the patent number and (2) the application number of the actual U.S. application leading to issuance of that patent to ensure the fee(s) is/are associated with the correct patent. 37 CFR 1.366(c) and (d).

SMALL ENTITY
☒ Patentee claims, or has previously claimed, small entity status. See 37 CFR 1.27.

LOSS OF ENTITLEMENT TO SMALL ENTITY STATUS
☐ Patentee is no longer entitled to small entity status. See 37 CFR 1.27(g)

NOT Small Entity		Small Entity	
Fee	Code	Fee	Code
○ 3 ½ year	(1551)	● 3 ½ year	(2551)
○ 7 ½ year	(1552)	○ 7 ½ year	(2552)
○ 11 ½ year	(1553)	○ 11 ½ year	(2553)

SURCHARGE
The surcharge required by 37 CFR 1.20(i)(2) (Fee Code 1558) must be paid as a condition of accepting unintentionally delayed payment of the maintenance fee.

MAINTENANCE FEE (37 CFR 1.20(e)-(g))
The appropriate maintenance fee must be submitted with this petition.

STATEMENT
THE UNDERSIGNED CERTIFIES THAT THE DELAY IN PAYMENT OF THE MAINTENANCE FEE TO THIS PATENT WAS UNINTENTIONAL

PETITIONER(S) REQUEST THAT THE DELAYED PAYMENT OF THE MAINTENANCE FEE BE ACCEPTED AND THE PATENT REINSTATED

THIS PORTION MUST BE COMPLETED BY THE SIGNATORY OR SIGNATORIES

37 CFR 1.378(d) states: "Any petition under this section must be signed by an attorney or agent registered to practice before the Patent and Trademark Office, or by the patentee, the assignee, or other party in interest."

I certify, in accordance with 37 CFR 1.4(d)(4) that I am

- ● An attorney or agent registered to practice before the Patent and Trademark Office
- ○ A sole patentee
- ○ A joint patentee; I certify that I am authorized to sign this submission on behalf of all the other patentees.
- ○ A joint patentee; all of whom are signing this e-petition
- ○ The assignee of record of the entire interest

Under the Paperwork Reduction Act of 1995, no persons are required to respond to a collection of information unless it displays valid OMB control number.

Patent Practitioner			
A signature of the applicant or representative is required in accordance with 37 CFR 1.33 and 10.18. Please see 37 CFR 1.4(d) for the form of the signature			
Signature	/Steven B. Pokotilow/	Date (YYYY-MM-DD)	2012-02-28
Name	Steven B. Pokotilow	Registration Number	26405

This collection of information is required by 37 CFR 1.378(c). The information is required to obtain or retain a benefit by the public which is to file (and by the USPTO to process) an application. Confidentiality is governed by 35 U.S.C. 122 and 37 CFR 1.11 and 1.14. This collection is estimated to take 1 hour to complete, including gathering, preparing, and submitting the completed application form to the USPTO. Time will vary depending upon the individual case. Any comments on the amount of time you require to complete this form and/ or suggestions for reducing this burden, should be sent to the Chief Information Officer, U.S. Patent and Trademark Office, U.S. Department of Commerce, P.O. Box 1450, Alexandria, VA 22313-1450. DO NOT SEND FEES OR COMPLETED FORMS TO THIS ADDRESS. **This form can only be used when in conjunction with EFS-Web. If this form is mailed to the USPTO, it may cause delays in reinstating the patent.**

Privacy Act Statement

The Privacy Act of 1974 (P.L. 93-579) requires that you be given certain information in connection with your submission of the attached form related to a patent application or patent. Accordingly, pursuant to the requirements of the Act, please be advised that: (1) the general authority for the collection of this information is 35 U.S.C. 2(b)(2); (2) furnishing of the information solicited is voluntary; and (3) the principal purpose for which the information is used by the U.S. Patent and Trademark Office is to process and/or examine your submission related to a patent application or patent. If you do not furnish the requested information, the U.S. Patent and Trademark Office may not be able to process and/or examine your submission, which may result in termination of proceedings or abandonment of the application or expiration of the patent.

The information provided by you in this form will be subject to the following routine uses:

1. The information on this form will be treated confidentially to the extent allowed under the Freedom of Information Act (5 U.S.C. 552) and the Privacy Act (5 U.S.C. 552a). Records from this system of records may be disclosed to the Department of Justice to determine whether the Freedom of Information Act requires disclosure of these records.

2. A record from this system of records may be disclosed, as a routine use, in the course of presenting evidence to a court, magistrate, or administrative tribunal, including disclosures to opposing counsel in the course of settlement negotiations.

3. A record in this system of records may be disclosed, as a routine use, to a Member of Congress submitting a request involving an individual, to whom the record pertains, when the individual has requested assistance from the Member with respect to the subject matter of the record.

4. A record in this system of records may be disclosed, as a routine use, to a contractor of the Agency having need for the information in order to perform a contract. Recipients of information shall be required to comply with the requirements of the Privacy Act of 1974, as amended, pursuant to 5 U.S.C. 552a(m).

5. A record related to an International Application filed under the Patent Cooperation Treaty in this system of records may be disclosed, as a routine use, to the International Bureau of the World Intellectual Property Organization, pursuant to the Patent Cooperation Treaty.

6. A record in this system of records may be disclosed, as a routine use, to another federal agency for purposes of National Security review (35 U.S.C. 181) and for review pursuant to the Atomic Energy Act (42 U.S.C. 218(c)).

7. A record from this system of records may be disclosed, as a routine use, to the Administrator, General Services, or his/her designee, during an inspection of records conducted by GSA as part of that agency's responsibility to recommend improvements in records management practices and programs, under authority of 44 U.S.C. 2904 and 2906. Such disclosure shall be made in accordance with the GSA regulations governing inspection of records for this purpose, and any other relevant (i.e., GSA or Commerce) directive. Such disclosure shall not be used to make determinations about individuals.

8. A record from this system of records may be disclosed, as a routine use, to the public after either publication of the application pursuant to 35 U.S.C. 122(b) or issuance of a patent pursuant to 35 U.S.C. 151. Further, a record may be disclosed, subject to the limitations of 37 CFR 1.14, as a routine use, to the public if the record was filed in an application which became abandoned or in which the proceedings were terminated and which application is referenced by either a published application, an application open to public inspections or an issued patent.

9. A record from this system of records may be disclosed, as a routine use, to a Federal, State, or local law enforcement agency, if the USPTO becomes aware of a violation or potential violation of law or regulation.

UNITED STATES PATENT AND TRADEMARK OFFICE

Commissioner for Patents
United States Patent and Trademark Office
P.O. Box 1450
Alexandria, VA 22313-1450
www.uspto.gov

ROBERT M. SCHWARTZ, P.A.
P.O. BOX 221470
HOLLYWOOD, FL 33022

MAILED

DEC 14 2011

OFFICE OF PETITIONS

In re Application of	:	
Dwayne Dundore	:	
Application No. 11/263,200	:	DECISION ON PETITION
Filed: October 31, 2005	:	TO WITHDRAW FROM
Attorney Docket No. IN 464.001	:	RECORD

This is a decision on the Request to Withdraw as attorney or agent of record under 37 CFR §§ 1.36(b) or 37 CFR 10.40, filed November 21, 2011.

The request is **APPROVED**.

The request was signed by Robert M. Schwartz on behalf of himself and all the attorneys/agents associated with Customer Number 53437. Therefore, Robert M. Schwartz and all the attorneys/agents associated with Customer Number 53437 have been withdrawn.

Applicant is reminded that there are no attorneys/agents of record at this time.

All future communications from the Office will be directed to the address listed below until otherwise properly notified by the applicant.

Telephone inquiries concerning this decision should be directed to the undersigned at (571) 272-3226.

Andrea Smith
Petitions Examiner
Office of Petitions

cc: Dwayne Dundore
11522 Audubond Lane
Clermont, FL 34711

UNITED STATES PATENT AND TRADEMARK OFFICE

Commissioner for Patents
United States Patent and Trademark Office
P.O. Box 1450
Alexandria, VA 22313-1450
www.uspto.gov

NIXON PEABODY, LLP
300 S. Riverside Plaza, 16th Floor
CHICAGO IL 60606-6613

MAILED
OCT 29 2010
OFFICE OF PETITIONS

In re Application of :
Wayne Rothschild, et al. :
Application No. 11/263,424 :
Filed: October 31, 2005 :
Atty Docket No. **66727-00003USP1** :

ON APPLICATION FOR
PATENT TERM ADJUSTMENT

This is in response to the "Application for Patent Term Adjustment", filed September 23, 2010, which is properly treated under 37 CFR 1.705(b). Applicants submits that the patent term adjustment to be indicated on the patent is one thousand (1,000) days, not six hundred and fourteen (614) days as calculated by the Office as of the mailing of the initial determination of patent term adjustment. Applicants request this correction solely on the basis that the Office will take in excess of three years to issue this patent and overlap considerations.

As the instant application for patent term adjustment requests reconsideration of the patent term adjustment as it relates to the Office's failure to issue the patent within 3 years of the filing date, the application for patent term adjustment under 37 CFR 1.705(b) is **DISMISSED as PREMATURE**.

Knowledge of the actual date the patent issues is required to calculate the amount, if any, of additional patent term patentee is entitled to for Office failure to issue the patent within 3 years. See § 1.702(b). (This is true even where a request for continued examination (RCE) was filed). The computer will not undertake the § 1.702(b) calculation until the actual date of issuance of the patent has been determined. Likewise, the computer will not calculate any further Office delay under § 1.702(a)(4) or applicant delay under § 1.704(c)(10) until the actual date of issuance of the patent has been determined. As such, the Office can not make a determination on the correctness of the patent term adjustment until the patent has issued.

Requesting reconsideration of the patent term adjustment to be indicated on the patent under 37 CFR 1.705(b) based on the initial determination of patent term adjustment and a projected issuance date of the patent (or even the filing date of the request for continued examination) is premature. Accordingly, it is appropriate to dismiss as premature such a request.

Rather than file an application for patent term adjustment under 37 CFR 1.705(b) contesting the 37 CFR 1.702(b) calculation at the time of the mailing of the notice of allowance, applicant is advised that they may wait until the time of the issuance of the patent and file a request for reconsideration of the patent term adjustment pursuant to 37 CFR 1.705(d). As the USPTO does not calculate the amount of time earned pursuant to 37 CFR 1.702(b) until the time of the issuance of the patent, the Office will consider any request for reconsideration of the patent term adjustment due to an error in the calculation of 37 CFR 1.702(b) to be timely if the request for reconsideration is filed within two months of the issuance of the patent. However, as to all other bases for contesting the initial determination of patent term adjustment received with the notice of allowance, applicant must timely file an application for patent term adjustment prior to the payment of the issue fee[1].

It is noted that any period of adjustment will be entered in light of 35 U.S.C. 154(B) GUARANTEE OF NO MORE THAN 3-YEAR APPLICATION PENDENCY, which provides that:

> Subject to the limitations under paragraph (2), if the issue of an original patent is delayed due to the failure of the United States Patent and Trademark Office to issue a patent within 3 years after the actual filing date of the application in the United States, not including —

---

[1] For example, if applicant disputes both the calculation of patent term adjustment under 37 CFR 1.702(a)(1) for Office failure to mail a first Office action or notice of allowance not later than fourteen months after the date on which the application was filed and under 37 CFR 1.702(b) for Office failure to issue a patent within three years of the actual filing date of the application, then applicant must still timely file an application for patent term adjustment prior to the payment of the issue fee to contest the calculation of Office delay in issuing a first Office action or notice of allowance. See 37 CFR 1.705(b) and 35 U.S.C. 154(b)(3)(B). A dispute as to the calculation of the §1.702(a)(1) period raised on request for reconsideration of patent term adjustment under 37 CFR 1.705(d) will be dismissed as untimely filed.

(i) any time consumed by continued examination of the application requested by the applicant under section 132(b);

It is further noted that a Request for Continued Examination (RCE) was filed in this application on December 10, 2009.

The Office acknowledges submission of the $200.00 fee set forth in 37 CFR 1.18(e) for consideration of the application for patent term adjustment under 37 CFR 1.705(b).

Any request for reconsideration of the patent term adjustment indicated on the patent must be timely filed within 2 months after issuance pursuant to 37 CFR 1.705(d) and must include payment of the required fee under 37 CFR 1.18(e).

The Office of Data Management has been advised of this decision. This application is being referred to the Office of Data Management for issuance of the patent.

Telephone inquiries specific to this decision should be directed to the undersigned at (571) 272-3222.

/Kenya A. McLaughlin/

Kenya A. McLaughlin
Senior Petitions Attorney
Office of Petitions

Doc Code: PET.PTA.RCAL
Document Description: Request for Recalculation in view of Wyeth

PTO/SB/131 (01-10)
Approved for use through 02/28/2011. OMB 0651-0020
U.S. Patent and Trademark Office; U. S. DEPARTMENT OF COMMERCE
Under the Paperwork Reduction Act of 1995, no persons are required to respond to a collection of information unless it displays a valid OMB control number.

REQUEST FOR RECALCULATION OF PATENT TERM ADJUSTMENT IN VIEW OF *WYETH**

Attorney Docket Number: TI-36549	Patent Number: 7,668,313
Filing Date (or 371(b) or (f) Date): 10-31-2005	Issue Date: 02/23/2010
First Named Inventor: James Edward Nave	
Title: RECIPIENT-ENCRYPTED SESSION KEY CRYPTOGRAPHY	

PATENTEE HEREBY REQUESTS RECALCULATION OF THE PATENT TERM ADJUSTMENT (PTA) UNDER 35 USC 154(b) INDICATED ON THE ABOVE-IDENTIFIED PATENT. THE PATENTEE'S SOLE BASIS FOR REQUESTING THE RECALCULATION IS THE USPTO'S PRE-*WYETH* INTERPRETATION OF 35 U.S.C. 154(b)(2)(A).

Note: This form is only for requesting a recalculation of PTA for patents issued before March 2, 2010, if the sole basis for requesting the recalculation is the USPTO's pre-*Wyeth* interpretation of 35 U.S.C. 154(b)(2)(A). See Instruction Sheet on page 2 for more information.

Patentees are reminded that to preserve the right to review in the United States District Court for the District of Columbia of the USPTO's patent term adjustment determination, a patentee must ensure that he or she also takes the steps required under 35 U.S.C. 154(b)(3) and (b)(4) and 37 CFR 1.705 in a timely manner.

**Wyeth v. Kappos*, No. 2009-1120 (Fed. Cir., Jan. 7, 2010).

Signature / Wade J. Brady III /	Date August 12, 2010
Name (Print/Typed) Wade J. Brady III	Registration Number 32,080

***Note**: Signatures of all the inventors or assignees of record of the entire interest or their representative(s) are required in accordance with 37 CFR 1.33 and 11.18. Please see 37 CFR 1.4(d) for the form of the signature. If necessary, submit multiple forms for more than one signature, see below**.*

☑ *Total of 1 forms are submitted.

The information is required to obtain or retain a benefit by the public which is to file (and by the USPTO to process) an application. Confidentiality is governed by 35 U.S.C. 122 and 37 CFR 1.11 and 1.14. This collection is estimated to take 12 hours to complete, including gathering, preparing, and submitting the completed application form to the USPTO. Time will vary depending upon the individual case. Any comments on the amount of time you require to complete this form and/or suggestions for reducing this burden, should be sent to the Chief Information Officer, U.S. Patent and Trademark Office, U.S. Department of Commerce, P.O. Box 1450, Alexandria, VA 22313-1450. DO NOT SEND FEES OR COMPLETED FORMS TO THIS ADDRESS. **SEND TO: Commissioner for Patents, P.O. Box 1450, Alexandria, VA 22313-1450.**

If you need assistance in completing the form, call 1-800-PTO-9199 and select option 2.

UNITED STATES PATENT AND TRADEMARK OFFICE

UNITED STATES DEPARTMENT OF COMMERCE
United States Patent and Trademark Office
Address: COMMISSIONER FOR PATENTS
P.O. Box 1450
Alexandria, Virginia 22313-1450
www.uspto.gov

TEXAS INSTRUMENTS INCORPORATED
P O BOX 655474, M/S 3999
DALLAS, TX 75265

Mail Date: 08/17/2010

Applicant	: James Edward Nave	: DECISION ON REQUEST FOR
Patent Number	: 7668313	: RECALCULATION of PATENT
Issue Date	: 02/23/2010	: TERM ADJUSTMENT IN VIEW
Application No	: 11/263,455	: OF WYETH AND NOTICE OF INTENT TO
Filed	: 10/31/2005	: ISSUE CERTIFICATE OF CORRECTION
		:

The Request for Recalculation is **GRANTED** to the extent indicated.

The patent term adjustment has been determined to be **1118** days. The USPTO will *sua sponte* issue a certificate of correction reflecting the amount of PTA days determined by the recalculation.

Prior to the issuance of the certificate of correction, the USPTO will afford patentee an opportunity to be heard and request reconsideration. Accordingly, patentee has **one month or thirty (30) days**, whichever is longer, to file a request for reconsideration of this patent term adjustment calculation. See 35 U.S.C. 154(b)(3)(B)(ii) and 37 CFR 1.322(a)(4). No extensions of time will be granted under 37 CFR 1.136.

Patentee should use document code PET.OP if electronically filing a request for reconsideration of this patent term adjustment calculation. The patentee must also include the information required by 37 CFR 1.705(b)(2) and the fee required by 37 CFR 1.18(e). If patentee does not file a timely request for reconsideration of this patent term adjustment calculation including the information required by 37 CFR 1.705(b)(2) and the fee required by 37 CFR 1.18(e), the USPTO will issue a certificate of correction reflecting the PTA determination noted above.

Patentee should be aware that in order to preserve the right to review in the United States District Court for the District of Columbia of the USPTO patent term adjustment determination, patentee must ensure that he or she also take the steps required under 35 U.S.C. 154(b)(4)(A) in a timely manner. Nothing in the request for recalculation should be construed as providing an alternative time frame for commencing a civil action under 35 U.S.C. 154(b)(4)(A).

Any questions concerning this decision should be directed to the Office of Patent Legal Administration at 571-272-7702.

UNITED STATES PATENT AND TRADEMARK OFFICE

Commissioner for Patents
United States Patent and Trademark Office
P.O. Box 1450
Alexandria, VA 22313-1450
www.uspto.gov

SHEPPARD, MULLIN, RICHTER & HAMPTON LLP
390 LYTTON AVENUE
PALO ALTO, CA 94301

MAILED
MAR 14 2011
OFFICE OF PETITIONS

In re Application	:	
Goulden et al.	:	DECISION ON PETITION
Application No. 11/263,501	:	TO WITHDRAW
Filed: October 31, 2005	:	FROM RECORD
Attorney Docket No. 4001-0016	:	

This is a decision on the Request to Withdraw as attorney or agent of record under 37 C.F.R. § 1.36(b), filed February 8, 2011.

The request is **DISMISSED** because it is moot.

A review of the file record indicates that Sheppard, Mullin, Richter & Hampton LLP, was revoked as of record by the applicant on February 27, 2011. Accordingly, the request to withdraw under 37 C.F.R. § 1.36(b) is not applicable.

All future communications from the Office will continue to be directed to the below-listed address of record until otherwise notified by applicant.

Telephone inquires concerning this decision should be directed to the undersigned at (571) 272-6059. All other inquires concerning either the examination or status of the application should be directed to the Technology Center.

A. Kelley

Alicia Kelley
Petitions Examiner
Office of Petitions

cc: DAVIDSON BERQUIST JACKSON & GOWDEY, LLP
ATTN: CLARIA/DR. BRIAN SIRITZKY, ESQ.
4300 WILSON BLVD., 7TH FLOOR
ARLINGTON, VA 22203

UNITED STATES PATENT AND TRADEMARK OFFICE

Commissioner for Patents
United States Patent and Trademark Office
P.O. Box 1450
Alexandria, VA 22313-1450
www.uspto.gov

Decision Date : December 1, 2011

In re Application of :

David Goulden

Application No : 11263501

Filed : 31-Oct-2005

Attorney Docket No : 4001-0016

DECISION ON REQUEST TO WITHDRAW AS ATTORNEY/AGENTOF RECORD

This is an electronic decision on the Request to Withdraw as attorney or agent of record under 37 CFR§ 1.36(b), filed December 1, 2011

The request is **APPROVED**

The request was signed by Brian Siritzky (registration no. 37497) on behalf of all attorneys/agents associated with Customer Number 91944 . All attorneys/agents associated with Customer Number 91944 have been withdrawn.

Since there are no remaining attorneys of record, all future communications from the Office will be directed to the first named inventor or assignee that has properly made itself of record pursuant to 37 CFR 3.71, with Customer number 86636 .

As a reminder, requester is required to inform the first named inventor or assignee that has properly made itself of record pursuant to 37 CFR 3.71 of the electronically processed petition.

Telephone inquiries concerning this decision should be directed to the Patent Electronic Business Center (EBC) at 866-217-9197.

Office of Petitions

Doc Code: PET.AUTO **Document Description: Petition automatically granted by EFS-Web**	PTO/SB/83 U.S. Patent and Trademark Office Department of Commerce

Electronic Petition Request	**REQUEST FOR WITHDRAWAL AS ATTORNEY OR AGENT AND CHANGE OF CORRESPONDENCE ADDRESS**
Application Number	11263501
Filing Date	31-Oct-2005
First Named Inventor	David Goulden
Art Unit	2442
Examiner Name	FARUK HAMZA
Attorney Docket Number	4001-0016
Title	TECHNIQUES FOR DISPLAYING IMPRESSIONS IN DOCUMENTS DELIVERED OVER A COMPUTER NETWORK

◉ Please withdraw me as attorney or agent for the above identified patent application and the practitioners of record associated with Customer Number: 91944

The reason(s) for this request are those described in 37 CFR:

10.40(b)(4)

Certifications

☒ I/We have given reasonable notice to the client, prior to the expiration of the response period, that the practitioner(s) intend to withdraw from employment

☒ I/We have delivered to the client or a duly authorized representative of the client all papers and property (including funds) to which the client is entitled

☒ I/We have notified the client of any responses that may be due and the time frame within which the client must respond

Change the correspondence address and direct all future correspondence to:
The address of the first named inventor or assignee that has properly made itself of record pursuant to 37 CFR 3.71, associated with Customer Number: 86636

I am authorized to sign on behalf of myself and all withdrawing practitioners.

Signature	/Brian Siritzky/
Name	Brian Siritzky
Registration Number	37497

UNITED STATES PATENT AND TRADEMARK OFFICE

Commissioner for Patents
United States Patent and Trademark Office
P.O. Box 1450
Alexandria, VA 22313-1450
www.uspto.gov

LEE & HAYES, PLLC
601 W RIVERSIDE
SUITE 1400
SPOKANE, WA 99201

MAILED

FEB 28 2011

OFFICE OF PETITIONS

In re Application of	:	
JUNG, Edward K. Y. et al.	:	
Application No. 11/263,575	:	DECISION ON PETITION
Filed: October 31, 2005	:	TO WITHDRAW
Attorney Docket No: **QQ1-0161US**	:	FROM RECORD
	:	

This is a decision on the Request to Withdraw as attorney or agent of record under 37 C.F.R. § 1.36(b), filed January 25, 2011.

The request is **MOOT**.

A review of the file record indicates that the power of attorney to LEE & HAYES, PLLC has been previously changed. Accordingly, the request to withdraw under 37 C.F.R. § 1.36(b) is moot.

All future communications from the Office will continue to be directed to the below-listed address until otherwise notified by applicant.

Telephone inquires concerning this decision should be directed to Tredelle Jackson at 571-272-2783.

/Tredelle D. Jackson/
Paralegal Specialist
Office of Petitions

cc: **MARGARET ANDERSON**
106 E. 6TH STREET, SUITE 900
AUSTIN TX 78701

UNITED STATES PATENT AND TRADEMARK OFFICE

Commissioner for Patents
United States Patent and Trademark Office
P.O. Box 1450
Alexandria, VA 22313-1450
www.uspto.gov

Fish & Richardson PC
P.O.Box 1022
Minneapolis MN 55440

MAILED
JUN 28 2011
OFFICE OF PETITIONS

In re Patent No. 7,945,615	:
Shetty et al.	: DECISION ON REQUEST FOR
Issue Date: May 17, 2011	: RECONSIDERATION OF
Application No. 11/263,590	: PATENT TERM ADJUSTMENT
Filed: October 31, 2005	:
Attorney Docket No. 07844-1058001	:
Title: DISTRIBUTED SHARED PERSISTENT OBJECTS	:

This is a decision on the petition filed on June 17, 2011, which is being treated as a petition under 37 CFR 1.705(d) requesting that the patent term adjustment indicated on the above-identified patent be corrected to indicate that the term of the above-identified patent is extended or adjusted by one thousand one hundred twenty-four (1,124) days.

The petition to correct the patent term adjustment indicated on the above-identified patent is **DISMISSED**.

BACKGROUND

On May 17, 2011, the above-identified application matured into U.S. Patent No. 7,945,615, with a revised patent term adjustment of 997 days. On June 17, 2011, patentee timely submitted this request for reconsideration of patent term adjustment (with required fee), asserting that the correct number of days of Patent Term Adjustment is 1,124. Patentee maintains that the Office incorrectly calculated Office delay

pursuant to 37 CFR 1.702(b). Patentee contends that the Office erred in subtracting from the "B delay" a period of time that was not "consumed by continued examination of the application." Specifically, Patentee argues that (after the filing of the request for continued examination) the Office mailed a Notice of Allowance on January 11, 2011, thereby closing examination of the application on that date. Thus, Patentee argues no continued examination took place during the 127 day period from January 11, 2011 (the mailing date of the Notice of Allowance) until May 17, 2011 (the date the patent was issued). As such, Patentee maintains that the "B delay" should include the 127 days and be increased from 415 to 542 days. Patentee concludes that the correct patent term adjustment is 1,124 days (the sum of 789 days of "A delay" and 542 days of "B delay" minus 83 days of overlap between "A delay" and "B delay" - 124 days of applicant delay).

RELEVANT STATUTE AND REGULATIONS

The statutory basis for calculation of "B delay" is 35 U.S.C. 154(b)(1)(B) GUARANTEE OF NO MORE THAN 3-YEAR APPLICATION PENDENCY, which provides that:

Subject to the limitations under paragraph (2), if the issue of an original patent is delayed due to the failure of the United States Patent and Trademark Office to issue a patent within 3 years after the actual filing date of the application in the United States, not including —

(i) any time consumed by continued examination of the application requested by the applicant under section 132(b);

(ii) any time consumed by a proceeding under section 135(a), any time consumed by the imposition of an order under section 181, or any time consumed by appellate review by the Board of Patent Appeals and Interferences or by a Federal court; or

(iii) any delay in the processing of the application by the United States Patent and Trademark Office requested by the applicant except as permitted by paragraph (3)(C), the term of the patent shall be extended 1 day for each day after the end of that 3-year period until the patent is issued.

The implementing regulation, 37 CFR 1.702(b) provides that:

Subject to the provisions of 35 U.S.C. 154(b) and this subpart, the term of an original patent shall be adjusted if the issuance of the patent was delayed due to the failure of the Office to issue a patent within three years after the date on which the application was filed under 35 U.S.C. 111(a) or the national stage commenced under 35 U.S.C. 371(b) or (f) in an international application, but not including:

(1) Any time consumed by continued examination of the application under 35 U.S.C. 132(b);

(2) Any time consumed by an interference proceeding under 35 U.S.C. 135(a);

(3) Any time consumed by the imposition of a secrecy order under 35 U.S.C. 181;

(4) Any time consumed by review by the Board of Patent Appeals and Interferences or a Federal court; or

(5) Any delay in the processing of the application by the Office that was requested by the applicant.

OPINION

Patentee's arguments have been considered, but not found persuasive. The Office calculated the period of "B delay" pursuant to 35 U.S.C. 154(b)(1)(B)(i) and 37 CFR 1.702(b)(1) as 415 days based on the application having been filed under 35 U.S.C. 111(a) on October 31, 2005, and the patent not having issued as of the day after the three year date, November 1, 2008, and a request for continued examination under 132(b) having been filed on December 21, 2009. In other words, the 127-day period beginning on the date of mailing of the notice of allowance to the date of issuance of the patent was considered time consumed by continued examination of an application under 35 U.S.C. 132(b) and was not included in the "B delay."

The Office's calculation of "B delay" is correct. The "B delay" is an adjustment entered if the issuance of the patent was delayed due to the failure of the Office to issue a patent within three years after the date on which the application was filed. However, the adjustment does not include, among other things, any time consumed by continued examination of the application at the request of the applicant under 35 U.S.C.

132(b)[1]. Thus, with respect to calculating the "B delay", where applicant has filed a request for continued examination the period of adjustment is the number of days, if any, in the period beginning on the day after the date that is three years after the date on which the application was filed under 35 U.S.C. 111(a) or the national stage commenced under 35 U.S.C. 371(b) or (f) in an international application and ending on the date a patent was issued, but not including the number of days in the period beginning on the date on which a request for continued examination of the application under 35 U.S.C. 132(b) was filed and ending on the date the patent was issued.

Further, counting the period of time excluded from the "B delay" for the filing of a request for continued examination under 35 U.S.C. 132(b), from the date on which the request for continued examination is filed to the date the patent is issued is proper. Patentee does not dispute that time consumed by continued examination of an application under 35 U.S.C. 132(b) is properly excluded and that the calculation of the excluded period begins on the date of filing of the request for continued examination. At issue is what further processing or examination beyond the date of filing of the request for continued examination is not any time consumed by continued examination of the application under 35 U.S.C. 132(b). The USPTO indicated in September of 2000 in the final rule to implement the patent term adjustment provisions of the AIPA that once a request for continued examination under 35 U.S.C. 132(b) and 37 CFR 1.114 is

---

[1] Pursuant to 35 U.S.C. 132(b), 37 CFR 1.114 provides for continued examination of an application, as follows:

(a) If prosecution in an application is closed, an applicant may request continued examination of the application by filing a submission and the fee set forth in § 1.17(e) prior to the earliest of:

(1) Payment of the issue fee, unless a petition under § 1.313 is granted;

(2) Abandonment of the application; or

(3) The filing of a notice of appeal to the U.S. Court of Appeals for the Federal Circuit under 35 U.S.C. 141, or the commencement of a civil action under 35 U.S.C. 145 or 146, unless the appeal or civil action is terminated.

(b) Prosecution in an application is closed as used in this section means that the application is under appeal, or that the last Office action is a final action (§ 1.113), a notice of allowance (§ 1.311), or an action that otherwise closes prosecution in the application.

filed in an application, any further processing or examination of the application, including granting of a patent, is by virtue of the continued examination given to the application under 35 U.S.C. 132(b) and CFR 1.114. See Changes to Implement Patent Term Adjustment under Twenty-Year Patent Term, 65 Fed. Reg. 56366, 56376 (Sept. 18, 2000) (response to comment 8). Thus, the excluded period begins with the filing of the request for continued examination and ends with the issuance of the patent.

Patentee's argument that the period of time after the issuance of a notice of allowance on a request for continued examination is not "any time consumed by continued examination requested by the applicant under section 132(b)" within the meaning of 35 U.S.C. 154(b)(1)(B)(i) is not availing. This limitation is not supported by the statutory language. Garcia v. United States, 469 U.S. 70, 75 (1984) ("only the most extraordinary showing of contrary intentions from [legislative history] would justify a limitation on the 'plain meaning' of the statutory language"). BP Am. Prod. Co. v. Burton, 549 U.S. 84, 91 (2006) ("Unless otherwise defined, statutory terms are generally interpreted in accordance with their ordinary meaning"). The statute provides for a guarantee of no more than 3-year application pendency, by providing for an adjustment in the patent term:

First, "Subject to the limitations of paragraph (2)," means that the limitations of paragraph 2 apply to this paragraph's adjustment of patent term. That is, the day-to-day extension of patent term for pendency beyond the 3 year period is restricted as follows: 1) "B delay" cannot accrue for days of "A delay" that overlap, 2) the patent term cannot be extended beyond disclaimed term, and 3) the period of adjustment, including accrued "B delay," will be reduced for applicant delay.

Second, "if the issue of an original patent is delayed due to the failure of the United States Patent and Trademark Office to issue a patent within 3 years after the actual filing date of the application in the United States," meaning that the condition must first occur that the issuance of an original patent (35 U.S.C. 153), not merely the issuance of a notice of allowance, is delayed due to the Office's failure to issue a patent (sign and record a patent grant in the name of the United States), not merely mail a notice of allowance, within 3 years

after the actual filing date of the application in the United States. This provision gives the Office a three-year period to issue a patent (sign and record a patent grant in the name of the United States) after the application filing date before an adjustment will accrue for "B delay."

Third, "not including- (i) any time consumed by continued examination of the application requested by the applicant under section 132(b); (ii) any time consumed by a proceeding under section 135(a), any time consumed by the imposition of an order under section 181, or any time consumed by appellate review by the Board of Patent Appeals and Interferences or by a Federal court; or (iii) any delay in the processing of the application by the United States Patent and Trademark Office requested by the applicant except as permitted by paragraph (3)(C), meaning that the three-year period does not include "any time consumed by" or "any delay in processing," as specified in clauses (i)-(iii). This language correlates to 35 U.S.C. 154(b)(1)(A) which likewise provides the basis for determining the period given the Office to take the specified actions before an adjustment will accrue for "A delay" (e.g., extended for 1 day after the day after the period specified in clauses (i)-(iv)).

Furthermore, these clauses are interpreted using their ordinary meanings. Nonetheless, the context of the legislation should be considered. As stated in Wyeth v. Dudas, 580 F. Supp. 2d 138 (D.D.C. 2008), because the clock for calculating the 20-year patent term begins to run on the filing date, and not on the day the patent is actually granted, some of the effective term of a patent is consumed by the time it takes to prosecute the application. To mitigate this effect, the statute, *inter alia*, grants adjustments of patent term whenever the patent prosecution takes more than three years, regardless of the reason. The time consumed by prosecution of the application includes every day the application is pending before the Office from the actual filing date of the application in the United States until the date of issuance of the patent. The time it takes to prosecute the application ends not with the mailing of the notice of allowance, but with the issuance of the patent.

Thus, not including "any time consumed by" means not including any days used to prosecute the application as specified in clauses (i)-(ii)[2]. Clause (i) specifies "any time consumed by continued examination of the application requested by the applicant under section 132(b)." Clause (ii) specifies "any time consumed by a proceeding under section 135(a), any time consumed by the imposition of an order under section 181, or any time consumed by appellate review by the Board of Patent Appeals and Interferences or by a Federal court." "Time" in the context of this legislation throughout refers to days. "Consumed by" means used by or used in the course of. *Websters Collegiate Dictionary*, (11th ed.). The "any" signifies that the days consumed by are "any" of the days in the pendency of the application, and not just days that occur after the application has been pending for 3 years. As such, "any time consumed by" refers to any days used in the course of 1) continued examination of the application under section 132(b)(the filing of a request for continued examination), 2) interference proceedings, 3) secrecy orders, and 4) appellate review. Thus, that 3-year period given to the Office to issue a patent before an adjustment will accrue for "B delay" does not include any days used in the course of or any time consumed by clauses (i)-(ii), including any time consumed by the filing of a request for continued examination.

Fourth, "the term of the patent shall be extended 1 day for each day after the end of that 3-year period until the patent is issued" meaning that the consequence of this failure is that after "the end of that 3-year period" an additional 1 day of patent term will accrue for each day that the application is pending until the day the patent is issued.

The "time consumed by" or used in the course of the continued examination of the application requested by the applicant under section 132(b) does not end until issuance of

---

[2] Clause (iii) provides for not including (iii) any delay in the processing of the application by the United States Patent and Trademark Office requested by the applicant except as permitted by paragraph (3)(C), the term of the patent shall be extended 1 day for each day after the end of that 3-year period until the patent is issued. It is noted that paragraph (3)(C) allows with an adequate showing by applicant for reinstatement of no more than 3 months of the patent term reduced for applicant delay in taking in excess of three months to respond.

the patent. 35 U.S.C. 132(b) was enacted under the same title, the "American Inventors Protection Act of 1999," as 35 U.S.C. 154(b). Section 4403 of the AIPA amended 35 U.S.C. § 132 to provide, at the request of the applicant, for continued examination of an application for a fee (request for continued examination or RCE practice), without requiring the applicant to file a continuing application under 37 CFR 1.53(b) or a continued prosecution application (CPA) under 37 CFR 1.53(d). Thus, clause (i) is different from clause (ii) in that clause (i) refers to an examination process whereas clause (ii) refers to time consumed by proceedings (interferences, secrecy orders and appeals) in an application.

By nature, the time used in the course of the examination process continues to issuance of the patent. The examination process involves examining the application to ascertain whether it appears that the applicant is entitled to a patent under the law. See 35 U.S.C. 131 ("[t]he Director shall cause an examination to be made of the application and the alleged new invention; and if on such examination it appears that the applicant is entitled to a patent under the law, the Director shall issue a patent therefor"). If on examination it appears that the applicant is entitled to a patent, the USPTO issues a notice of allowance. See 35 U.S.C. 151 ("[i]f it appears that applicant is entitled to a patent under the law, a written notice of allowance of the application shall be given or mailed to the applicant"). If on examination it appears that the applicant is not entitled to a patent, the USPTO issues a notice (an Office action) stating the applicable rejection, objection, or other requirement, with the reasons therefor. See 35 U.S.C. 132 ("[w]henever, on examination, any claim for a patent is rejected, or any objection or requirement made, the Director shall notify the applicant thereof, stating the reasons for such rejection, or objection or requirement, together with such information and references as may be useful in judging of the propriety of continuing the prosecution of his application"). Neither the issuance of a notice of allowance nor the insurance of an Office action terminates the examination process. If after the issuance of an Office action under 35 U.S.C. 132 it subsequently appears that the applicant is entitled to a patent (e.g., in response to an argument or amendment by the applicant), the USPTO will issue a notice of allowance. Conversely, if after the issuance of a notice of allowance under 35 U.S.C. 151 it subsequently appears that the applicant is not

entitled to a patent (e.g., in response to information provided by the applicant or uncovered by the USPTO), the USPTO will withdraw the application from issuance and issue an Office action under 35 U.S.C. 132 stating the applicable rejection, objection, or other requirement, with the reasons therefor.

As held in Blacklight Power, the USPTO's responsibility to issue a patent containing only patentable claims does not end with the issuance of a notice of allowance under 35 U.S.C. 151. See BlackLight Power, Inc. v. Rogan, 295 F.3d 1269, 1273 (Fed. Cir. 2002). Rather, if there is any substantial, reasonable ground within the knowledge or cognizance of the Director as to why an application should not issue, it is the USPTO's duty to refuse to issue the patent even if a notice of allowance has previously been issued for the application. See In re Drawbaugh, 9 App. D.C. 219, 240 (D.C. Cir 1896).

Moreover, the applicant continues to be engaged in the examination process after the mailing of the notice of allowance. 37 CFR 1.56 makes clear that the applicant has a duty to disclose information material to patentability as long as the application is pending before the USPTO (i.e., until a patent is granted or the application is abandoned). See 37 CFR 1.56(a) ("[t]he duty to disclose information exists with respect to each pending claim until the claim is cancelled or withdrawn from consideration, or the application becomes abandoned"). 37 CFR 1.97 and 1.98 provide for the consideration of information submitted by the applicant after a notice of allowance has been mailed. See 37 CFR 1.97(d). In addition, 37 CFR 1.312 provides for the amendment of an application after a notice of allowance has been mailed. In fact, the request for examination procedures[3] permit the filing of a request for continued examination under 37 CFR 1.114 even after the issuance of a notice of allowance under 35 U.S.C. 151. See 37 CFR 1.114(a)(1).

As the examination process does not terminate with the mailing of the notice of allowance, the time consumed by continued examination requested by the applicant under section 132(b) does not terminate with the mailing of the notice of allowance. All the time the application is pending from the date of filing of the request for continued examination to the mailing of the notice of allowance through issuance of the

[3] Thus, on occasion, even where a request for continued examination has already been filed and a notice of allowance issued pursuant to that request, applicant may file a further request for continued examination.

patent is a consequence of the filing of the request for continued examination. Further action by the Office is pursuant to that request. Applicant has gotten further prosecution of the application without having to file a continuing application under 37 CFR 1.53(b).

All of the continued examination pursuant to the filing of the request by the applicant is properly excluded from the delay attributed to the Office. 35 U.S.C. 154(b)(1)(B)'s guarantee of a total application pendency of no more than three years provides for adjustment of the patent term for delay due to the Office's failure to issue the patent within three years, but does not include "any time consumed by continued examination requested by the applicant under 35 U.S.C. 132(b)." It is not necessary to mitigate the effect on the 20-year term to the extent that applicant has requested that the Office continue to examine the application via a request for continued examination, in lieu of, the filing of a continuing application under 37 CFR 1.53(b).

In this instance, a request for continued examination was filed on December 21, 2009, and the patent issued by virtue of that request on May 17, 2011. Pursuant to 35 U.S.C. 154(b)(1)(B)(i), the period beginning on December 21, 2009 and ending on May 17, 2011 is not included in calculating Office delay.

CONCLUSION

In view thereof, it is concluded that the patent term adjustment of 997 days indicated on the patent is correct.

Telephone inquiries specific to this matter should be directed to the undersigned at (571) 272-3211.

Christina Tartera Donnell

Christina Tartera Donnell
Senior Petitions Attorney
Office of Petitions

UNITED STATES PATENT AND TRADEMARK OFFICE

Commissioner for Patents
United States Patent and Trademark Office
P.O. Box 1450
Alexandria, VA 22313-1450
www.uspto.gov

FISH & RICHARDSON P.C.
PO BOX 1022
MINNEAPOLIS MN 55440-1022

MAILED
SEP 13 2011
OFFICE OF PETITIONS

In re Patent No. 7,945,615	:	
Shetty et al.	:	DECISION FOR REQUEST
Issue Date: May 17, 2011	:	FOR RECONSIDERATION
Application No. 11/263,590	:	OF PATENT TERM
Filed: October 31, 2005	:	ADJUSTMENT
Attorney Docket No. 07844-1058001	:	

This is a decision on the "RESPONSE TO DECISION ON REQUEST FOR RECONSIDERATION OF PATENT TERM ADJUSTMENT" filed August 29, 2011. Patentees request that the patent term adjustment indicated on the face of the Letters of Patent be corrected from nine hundred ninety-seven (997) days to one thousand one hundred twenty-four (1,124) days.

The request for reconsideration is granted to the extent that the determination has been reconsidered; however, the request for reconsideration of patent term adjustment is **DENIED** with respect to making any change in the patent adjustment determination under 35 U.S.C. 154(b) of 997 days. This decision may be viewed as a final agency action within the meaning of 5 U.S.C. 704 and for purposes of seeking judicial review. See MPEP 1002.02.

BACKGROUND

On May 17, 2011, the above-identified application matured into U.S. Patent No. 7,945,615, with a revised patent term adjustment of 997 days. This revised determination included an entry of a

period of adjustment of 415 days pursuant to 37 CFR 1.702(b) for the Office taking in excess of three years to issue the patent.

On June 17, 2011, patentees filed a petition under 37 CFR 1.705(d) requesting that the patent term adjustment be reflected as 1,124 days. By decision mailed June 28, 2011, the request for reconsideration was dismissed and the patent term adjustment remained 997 days.

On August 29, 2011, patentees filed the present request for reconsideration. Patentees again dispute the calculation of the "B delay" period of the patent term adjustment. Specifically, patentees' state:

> Patentees submit that B Delay accumulated for a total of 928 days, beginning on November 1, 2008 (the day after the date that is three years after the date on which the application was filed), and ending May 17, 2011 (the date the patent was issued). The Office has excluded from B Delay the number of days corresponding to the period beginning on December 21, 2009 (the date on which a Request for Continued Examination was filed) and ending on May 17, 2011 (the date the patent was issued). However, this entire period should not be excluded from B Delay because it does not correspond exactly to continued examination. The Examiner's mailing of a Notice of Allowance Action mailed on January 11, 2011, closed examination of the application on that date. Section 154(b)(1)(B)(i) of Title 35 excludes from B Delay 'time consumed by continued examination of the application.' The statute does not provide for exclusion from B Delay of time from the mailing of a Notice of Allowance until issuance (a period during which continued examination did not occur).

"Response to Decision on Request for Reconsideration of Patent Term Adjustment" filed August 29, 2011, pp. 2-3.

STATUTE AND REGULATION

35 U.S.C. 154(b) as amended by § 4402 of the American Inventors Protection Act of 1999[1] (AIPA) provides that:

---

[1] Public Law 106-113, 113 Stat. 1501, 1501A-557 through 1501A-560 (1999).

ADJUSTMENT OF PATENT TERM. –

(1) PATENT TERM GUARANTEES. –

(A) GUARANTEE OF PROMPT PATENT AND TRADEMARK OFFICE RESPONSES. – Subject to the limitations under paragraph (2), if the issue of an original patent is delayed due to the failure of the Patent and Trademark Office to –

(i) provide at least one of the notifications under section 132 of this title or a notice of allowance under section 151 of this title not later than 14 months after –

(I) the date on which an application was filed under section 111(a) of this title; or

(II) the date on which an international application fulfilled the requirements of section 371 of this title;

(ii) respond to a reply under section 132, or to an appeal taken under section 134, within 4 months after the date on which the reply was filed or the appeal was taken;

(iii) act on an application within 4 months after the date of a decision by the Board of Patent Appeals and Interferences under section 134 or 135 or a decision by a Federal court under section 141, 145, or 146 in a case in which allowable claims remain in the application; or

(iv) issue a patent within 4 months after the date on which the issue fee was paid under section 151 and all outstanding requirements were satisfied, the term of the patent shall be extended 1 day for each day after the end of the period specified in clause (i), (ii), (iii), or (iv), as the case may be, until the action described in such clause is taken.

(B) GUARANTEE OF NO MORE THAN 3-YEAR APPLICATION PENDENCY. – Subject to the limitations under paragraph (2), if the issue of an original patent is delayed due to the failure of the United States Patent and Trademark Office to issue a patent within 3 years after the actual filing date of the application in the United States, not including –

(i) any time consumed by continued examination of the application requested by the applicant under section 132(b);

(ii) any time consumed by a proceeding under section 135(a), any time consumed by the imposition of an order under section 181, or any time consumed by appellate review

by the Board of Patent Appeals and Interferences or by a Federal court; or

(iii) any delay in the processing of the application by the United States Patent and Trademark Office requested by the applicant except as permitted by paragraph (3)(C), the term of the patent shall be extended 1 day for each day after the end of that 3-year period until the patent is issued.

(C) GUARANTEE OR ADJUSTMENTS FOR DELAYS DUE TO INTERFERENCES, SECRECY ORDERS, AND APPEALS. – Subject to the limitations under paragraph (2), if the issue of an original patent is delayed due to –

(i) a proceeding under section 135(a);

(ii) the imposition of an order under section 181; or

(iii) appellate review by the Board of Patent Appeals and Interferences or by a Federal court in a case in which the patent was issued under a decision in the review reversing an adverse determination of patentability, the term of the patent shall be extended 1 day for each day of the pendency of the proceeding, order, or review, as the case may be.

(2) LIMITATIONS. –

(A) IN GENERAL. – To the extent that periods of delay attributable to grounds specified in paragraph (1) overlap, the period of any adjustment granted under this subsection shall not exceed the actual number of days the issuance of the patent was delayed.

The implementing regulation, 37 CFR 1.702, provides grounds for adjustment of patent term due to examination delay under the Patent Term Guarantee Act of 1999 (original applications, other than designs, filed on or after May 29, 2000).

(a) Failure to take certain actions within specified time frames. Subject to the provisions of 35 U.S.C. 154(b) and this subpart, the term of an original patent shall be adjusted if the issuance of the patent was delayed due to the failure of the Office to:

(1) Mail at least one of a notification under 35 U.S.C. 132 or a notice of allowance under 35 U.S.C. 151 not later than fourteen months after the date on which the application was filed under 35 U.S.C. 111(a) or fulfilled

the requirements of 35 U.S.C. 371 in an international application;

(2) Respond to a reply under 35 U.S.C. 132 or to an appeal taken under 35 U.S.C. 134 not later than four months after the date on which the reply was filed or the appeal was taken;

(3) Act on an application not later than four months after the date of a decision by the Board of Patent Appeals and Interferences under 35 U.S.C. 134 or 135 or a decision by a Federal court under 35 U.S.C. 141, 145, or 146 where at least one allowable claim remains in the application; or

(4) Issue a patent not later than four months after the date on which the issue fee was paid under 35 U.S.C. 151 and all outstanding requirements were satisfied.

(b) Failure to issue a patent within three years of the actual filing date of the application. Subject to the provisions of 35 U.S.C. 154(b) and this subpart, the term of an original patent shall be adjusted if the issuance of the patent was delayed due to the failure of the Office to issue a patent within three years after the date on which the application was filed under 35 U.S.C. 111(a) or the national stage commenced under 35 U.S.C. 371(b) or (f) in an international application, but not including[2]:

In pertinent part, 37 CFR 1.703 provides for calculation of the periods, as follows:

Period of adjustment of patent term due to examination delay.

(a) The period of adjustment under § 1.702(a) is the sum of the following periods:

(1) The number of days, if any, in the period beginning on the day after the date that is fourteen months after the date on which the application was filed under

---

[2] (1) Any time consumed by continued examination of the application under 35 U.S.C. 132(b);

(2) Any time consumed by an interference proceeding under 35 U.S.C. 135(a);

(3) Any time consumed by the imposition of a secrecy order under 35 U.S.C. 181;

(4) Any time consumed by review by the Board of Patent Appeals and Interferences or a Federal court; or

(5) Any delay in the processing of the application by the Office that was requested by the applicant.

35 U.S.C. 111(a) or fulfilled the requirements of 35 U.S.C. 371 and ending on the date of mailing of either an action under 35 U.S.C. 132, or a notice of allowance under 35 U.S.C. 151, whichever occurs first;

(2) The number of days, if any, in the period beginning on the day after the date that is four months after the date a reply under § 1.111 was filed and ending on the date of mailing of either an action under 35 U.S.C. 132, or a notice of allowance under 35 U.S.C. 151, whichever occurs first;

(3) The number of days, if any, in the period beginning on the day after the date that is four months after the date a reply in compliance with § 1.113(c) was filed and ending on the date of mailing of either an action under 35 U.S.C. 132, or a notice of allowance under 35 U.S.C. 151, whichever occurs first;

(4) The number of days, if any, in the period beginning on the day after the date that is four months after the date an appeal brief in compliance with § 41.37 of this title was filed and ending on the date of mailing of any of an examiner's answer under § 41.39 of this title, an action under 35 U.S.C. 132, or a notice of allowance under 35 U.S.C. 151, whichever occurs first;

(5) The number of days, if any, in the period beginning on the day after the date that is four months after the date of a final decision by the Board of Patent Appeals and Interferences or by a Federal court in an appeal under 35 U.S.C. 141 or a civil action under 35 U.S.C. 145 or 146 where at least one allowable claim remains in the application and ending on the date of mailing of either an action under 35 U.S.C. 132 or a notice of allowance under 35 U.S.C. 151, whichever occurs first; and

(6) The number of days, if any, in the period beginning on the day after the date that is four months after the date the issue fee was paid and all outstanding requirements were satisfied and ending on the date a patent was issued.

(b) The period of adjustment under § 1.702(b) is the number of days, if any, in the period beginning on the day after the date that is three years after the date on which the application was filed under 35 U.S.C. 111(a) or the

national stage commenced under 35 U.S.C. 371(b) or (f) in an international application and ending on the date a patent was issued, but not including the sum of the following periods[3]:

37 CFR 1.703(f) provides that:

The adjustment will run from the expiration date of the patent as set forth in 35 U.S.C. 154(a)(2). To the extent that periods of delay attributable to the grounds specified in §1.702 overlap, the period of adjustment granted under this section shall not exceed the actual number of days the issuance of the patent was delayed. The term of a patent entitled to adjustment under § 1.702 and this section shall be adjusted for the sum of the periods calculated under paragraphs (a) through (e) of this

---

[3] (1) The number of days, if any, in the period beginning on the date on which a request for continued examination of the application under 35 U.S.C. 132(b) was filed and ending on the date the patent was issued;

(2)(i) The number of days, if any, in the period beginning on the date an interference was declared or redeclared to involve the application in the interference and ending on the date that the interference was terminated with respect to the application; and (ii) The number of days, if any, in the period beginning on the date prosecution in the application was suspended by the Office due to interference proceedings under 35 U.S.C. 135(a) not involving the application and ending on the date of the termination of the suspension;

(3)(i) The number of days, if any, the application was maintained in a sealed condition under 35 U.S.C. 181; (ii) The number of days, if any, in the period beginning on the date of mailing of an examiner's answer under § 41.39 of this title in the application under secrecy order and ending on the date the secrecy order was removed; (iii) The number of days, if any, in the period beginning on the date applicant was notified that an interference would be declared but for the secrecy order and ending on the date the secrecy order was removed; and (iv) The number of days, if any, in the period beginning on the date of notification under § 5.3(c) of this chapter and ending on the date of mailing of the notice of allowance under 35 U.S.C. 151; and,

(4) The number of days, if any, in the period beginning on the date on which a notice of appeal to the Board of Patent Appeals and Interferences was filed under 35 U.S.C. 134 and § 41.31 of this title and ending on the date of the last decision by the Board of Patent Appeals and Interferences or by a Federal court in an appeal under 35 U.S.C. 141 or a civil action under 35 U.S.C. 145, or on the date of mailing of either an action under 35 U.S.C. 132, or a notice of allowance under 35 U.S.C. 151, whichever occurs first, if the appeal did not result in a decision by the Board of Patent Appeals and Interferences.

section, to the extent that such periods are not overlapping, less the sum of the periods calculated under § 1.704. The date indicated on any certificate of mailing or transmission under § 1.8 shall not be taken into account in this calculation.

OPINION

Patentees' argument has again been considered, but is not persuasive. The Office's calculation of "B delay" is correct. The "B delay" is an adjustment entered if the issuance of the patent was delayed due to the failure of the Office to issue a patent within three years after the date on which the application was filed. However, the adjustment does not include, among other things, any time consumed by continued examination of the application at the request of the applicant under 35 U.S.C. 132(b)[4]. With respect to calculating the "B delay" where applicant has filed a request for continued examination, the period of adjustment is the number of days, if any, in the period beginning on the day after the date that is three years after the date on which the application was filed under 35 U.S.C. 111(a) or the national stage commenced under 35 U.S.C. 371(b) or (f) in an international application and ending on the date a patent was issued, but not including the number of days in the period beginning on the date on which a request for continued examination of the application under 35 U.S.C. 132(b) was filed and ending on the date the patent was issued.

---

[4] Pursuant to 35 U.S.C. 132(b), 37 CFR 1.114 provides for continued examination of an application, as follows:

(a) If prosecution in an application is closed, an applicant may request continued examination of the application by filing a submission and the fee set forth in § 1.17(e) prior to the earliest of:

(1) Payment of the issue fee, unless a petition under § 1.313 is granted;

(2) Abandonment of the application; or

(3) The filing of a notice of appeal to the U.S. Court of Appeals for the Federal Circuit under 35 U.S.C. 141, or the commencement of a civil action under 35 U.S.C. 145 or 146, unless the appeal or civil action is terminated.

(b) Prosecution in an application is closed as used in this section means that the application is under appeal, or that the last Office action is a final action (§ 1.113), a notice of allowance (§ 1.311), or an action that otherwise closes prosecution in the application.

Further, counting the period of time excluded from the "B delay" for the filing of a request for continued examination under 35 U.S.C. 132(b), from the date on which the request for continued examination is filed to the date the patent is issued is proper. Patentees do not dispute that time consumed by continued examination of an application under 35 U.S.C. 132(b) is properly excluded and that the calculation of the excluded period begins on the date of filing of the request for continued examination. At issue is what further processing or examination beyond the date of filing of the request for continued examination is not any time consumed by continued examination of the application under 35 U.S.C. 132(b). The USPTO indicated in September of 2000 in the final rule to implement the patent term adjustment provisions of the AIPA that once a request for continued examination under 35 U.S.C. 132(b) and 37 CFR 1.114 is filed in an application, any further processing or examination of the application, including granting of a patent, is by virtue of the continued examination given to the application under 35 U.S.C. 132(b) and CFR 1.114. See Changes to Implement Patent Term Adjustment under Twenty-Year Patent Term, 65 Fed. Reg. 56366, 56376 (Sept. 18, 2000) (response to comment 8). Thus, the excluded period begins with the filing of the request for continued examination and ends with the issuance of the patent.

Patentees' argument that the period of time after the issuance of a notice of allowance on a request for continued examination is not "any time consumed by continued examination requested by the applicant under section 132(b)" within the meaning of 35 U.S.C. 154(b)(1)(B)(i) is not availing. This limitation is not supported by the statutory language. Garcia v. United States, 469 U.S. 70, 75 (1984) ("only the most extraordinary showing of contrary intentions from [legislative history] would justify a limitation on the 'plain meaning' of the statutory language"). BP Am. Prod. Co. v. Burton, 549 U.S. 84, 91 (2006) ("Unless otherwise defined, statutory terms are generally interpreted in accordance with their ordinary meaning"). The statute provides for a guarantee of no more than 3-year application pendency, by providing for an adjustment in the patent term:

First, "Subject to the limitations of paragraph (2)," means that the limitations of paragraph 2 apply to this paragraph's adjustment of patent term. That is, the day-to-day extension of patent term for pendency beyond the 3 year period is restricted as follows: 1) "B delay" cannot accrue for days of "A delay"

that overlap, 2) the patent term cannot be extended beyond disclaimed term, and 3) the period of adjustment, including accrued "B delay," will be reduced for applicant delay.

Second, "if the issue of an original patent is delayed due to the failure of the United States Patent and Trademark Office to issue a patent within 3 years after the actual filing date of the application in the United States," meaning that the condition must first occur that the issuance of an original patent (35 U.S.C. 153), not merely the issuance of a notice of allowance, is delayed due to the Office's failure to issue a patent (sign and record a patent grant in the name of the United States), not merely mail a notice of allowance, within 3 years after the actual filing date of the application in the United States. This provision gives the Office a three-year period to issue a patent (sign and record a patent grant in the name of the United States) after the application filing date before an adjustment will accrue for "B delay."

Third, "not including- (i) any time consumed by continued examination of the application requested by the applicant under section 132(b); (ii) any time consumed by a proceeding under section 135(a), any time consumed by the imposition of an order under section 181, or any time consumed by appellate review by the Board of Patent Appeals and Interferences or by a Federal court; or (iii) any delay in the processing of the application by the United States Patent and Trademark Office requested by the applicant except as permitted by paragraph (3)(C), meaning that the three-year period does not include "any time consumed by" or "any delay in processing," as specified in clauses (i)-(iii). This language correlates to 35 U.S.C. 154(b)(1)(A) which likewise provides the basis for determining the period given the Office to take the specified actions before an adjustment will accrue for "A delay" (e.g., extended for 1 day after the day after the period specified in clauses (i)-(iv)).

Furthermore, these clauses are interpreted using their ordinary meanings. Nonetheless, the context of the legislation should be considered. As stated in Wyeth v. Dudas, 580 F. Supp.2d 138(D.D.C., September 30, 2008), because the clock for calculating the 20-year patent term begins to run on the filing date, and not on the day the patent is actually granted, some of the effective term of a patent is consumed by the time it takes to prosecute the application. To mitigate this effect, the

statute, *inter alia*, grants adjustments of patent term whenever the patent prosecution takes more than three years, regardless of the reason. The time consumed by prosecution of the application includes every day the application is pending before the Office from the actual filing date of the application in the United States until the date of issuance of the patent. The time it takes to prosecute the application ends not with the mailing of the notice of allowance, but with the issuance of the patent.

Thus, not including "any time consumed by" means not including any days used to prosecute the application as specified in clauses (i)-(ii)[5]. Clause (i) specifies "any time consumed by continued examination of the application requested by the applicant under section 132(b)." Clause (ii) specifies "any time consumed by a proceeding under section 135(a), any time consumed by the imposition of an order under section 181, or any time consumed by appellate review by the Board of Patent Appeals and Interferences or by a Federal court." "Time" in the context of this legislation throughout refers to days. "Consumed by" means used by or used in the course of. *Websters Collegiate Dictionary*, (11th ed.). The "any" signifies that the days consumed by are "any" of the days in the pendency of the application, and not just days that occur after the application has been pending for 3 years. As such, "any time consumed by" refers to any days used in the course of 1) continued examination of the application under section 132(b)(the filing of a request for continued examination), 2) interference proceedings, 3) secrecy orders, and 4) appellate review. Thus, that 3-year period given to the Office to issue a patent before an adjustment will accrue for "B delay" does not include any days used in the course of or any time consumed by clauses (i)-(ii), including any time consumed by the filing of a request for continued examination.

---

[5] Clause (iii) provides for not including (iii) any delay in the processing of the application by the United States Patent and Trademark Office requested by the applicant except as permitted by paragraph (3)(C), the term of the patent shall be extended 1 day for each day after the end of that 3-year period until the patent is issued. It is noted that paragraph (3)(C) allows with an adequate showing by applicant for reinstatement of no more than 3 months of the patent term reduced for applicant delay in taking in excess of three months to respond.

Fourth, "the term of the patent shall be extended 1 day for each day after the end of that 3-year period until the patent is issued" meaning that the consequence of this failure is that after "the end of that 3-year period" an additional 1 day of patent term will accrue for each day that the application is pending until the day the patent is issued.

The "time consumed by" or used in the course of the continued examination of the application requested by the applicant under section 132(b) does not end until issuance of the patent. 35 U.S.C. 132(b) was enacted under the same title, the "American Inventors Protection Act of 1999," as 35 U.S.C. 154(b). Section 4403 of the AIPA amended 35 U.S.C. § 132 to provide, at the request of the applicant, for continued examination of an application for a fee (request for continued examination or RCE practice), without requiring the applicant to file a continuing application under 37 CFR 1.53(b) or a continued prosecution application (CPA) under 37 CFR 1.53(d). Thus, clause (i) is different from clause (ii) in that clause (i) refers to an examination process whereas clause (ii) refers to time consumed by proceedings (interferences, secrecy orders and appeals) in an application.

By nature, the time used in the course of the examination process continues to issuance of the patent. The examination process involves examining the application to ascertain whether it appears that the applicant is entitled to a patent under the law. See 35 U.S.C. 131 ("[t]he Director shall cause an examination to be made of the application and the alleged new invention; and if on such examination it appears that the applicant is entitled to a patent under the law, the Director shall issue a patent therefor"). If on examination it appears that the applicant is entitled to a patent, the USPTO issues a notice of allowance. See 35 U.S.C. 151 ("[i]f it appears that applicant is entitled to a patent under the law, a written notice of allowance of the application shall be given or mailed to the applicant"). If on examination it appears that the applicant is not entitled to a patent, the USPTO issues a notice (an Office action) stating the applicable rejection, objection, or other requirement, with the reasons therefor. See 35 U.S.C. 132 ("[w]henever, on examination, any claim for a patent is rejected, or any objection or requirement made, the Director shall notify the applicant thereof, stating the reasons for such rejection, or objection or requirement, together with such

information and references as may be useful in judging of the propriety of continuing the prosecution of his application"). Neither the issuance of a notice of allowance nor the insurance of an Office action terminates the examination process. If after the issuance of an Office action under 35 U.S.C. 132 it subsequently appears that the applicant is entitled to a patent (e.g., in response to an argument or amendment by the applicant), the USPTO will issue a notice of allowance.

Conversely, if after the issuance of a notice of allowance under 35 U.S.C. 151 it subsequently appears that the applicant is not entitled to a patent (e.g., in response to information provided by the applicant or uncovered by the USPTO), the USPTO will withdraw the application from issuance and issue an Office action under 35 U.S.C. 132 stating the applicable rejection, objection, or other requirement, with the reasons therefor.

As held in Blacklight Power, the USPTO's responsibility to issue a patent containing only patentable claims does not end with the issuance of a notice of allowance under 35 U.S.C. 151. See Blacklight Power, Inc. v. Rogan, 295 F.3d 1269, 1273 (Fed. Cir. 2002). Rather, if there is any substantial, reasonable ground within the knowledge or cognizance of the Director as to why an application should not issue, it is the USPTO's duty to refuse to issue the patent even if a notice of allowance has previously been issued for the application. See In re Drawbaugh, 9 App. D.C. 219, 240 (D.C. Cir 1896).

Moreover, the applicant continues to be engaged in the examination process after the mailing of the notice of allowance. 37 CFR 1.56 makes clear that the applicant has a duty to disclose information material to patentability as long as the application is pending before the USPTO (i.e., until a patent is granted or the application is abandoned). See 37 CFR 1.56(a) ("[t]he duty to disclose information exists with respect to each pending claim until the claim is cancelled or withdrawn from consideration, or the application becomes abandoned"). 37 CFR 1.97 and 1.98 provide for the consideration of information submitted by the applicant after a notice of allowance has been mailed. See 37 CFR 1.97(d). In addition, 37 CFR 1.312 provides for the amendment of an application after a notice of allowance

has been mailed. In fact, the request for examination procedures[6] permits the filing of a request for continued examination under 37 CFR 1.114 even after the issuance of a notice of allowance under 35 U.S.C. 151. See 37 CFR 1.114(a)(1).

As the examination process does not terminate with the mailing of the notice of allowance, the time consumed by continued examination requested by the applicant under section 132(b) does not terminate with the mailing of the notice of allowance. All the time the application is pending from the date of filing of the request for continued examination to the mailing of the notice of allowance through issuance of the patent is a consequence of the filing of the request for continued examination. Further action by the Office is pursuant to that request. Applicant has gotten further prosecution of the application without having to file a continuing application under 37 CFR 1.53(b).

All of the continued examination pursuant to the filing of the request by the applicant is properly excluded from the delay attributed to the Office. 35 U.S.C. 154(b)(1)(B)'s guarantee of a total application pendency of no more than three years provides for adjustment of the patent term for delay due to the Office's failure to issue the patent within three years, but does not include "any time consumed by continued examination requested by the applicant under 35 U.S.C. 132(b)." It is not necessary to mitigate the effect on the 20-year term to the extent that applicant has requested that the Office continue to examine the application via a request for continued examination, in lieu of, the filing of a continuing application under 37 CFR 1.53(b).

In this instance, a request for continued examination was filed on December 21, 2009, and the patent issued by virtue of that request on May 17, 2011. Pursuant to 35 U.S.C. 154(b)(1)(B)(i), the period beginning on December 21, 2009 and ending on May 17, 2011 is not included in calculating Office delay. In view thereof, it is concluded that the patent term adjustment of 997 days indicated on the patent is correct.

---

[6] Thus, on occasion, even where a request for continued examination has already been filed and a notice of allowance issued pursuant to that request, applicant may file a further request for continued examination.

CONCLUSION

The request for reconsideration of the revised patent term adjustment is denied.

The Office acknowledges the previous submission of the $200.00 fee set forth in 37 CFR 1.18(e). As this request pertains only to the over 3-year delay issue previously raised in the application for patent term adjustment, no additional fees are required.

Telephone inquiries specific to this matter should be directed to Christina Tartera Donnell, Senior Petitions Attorney, (571) 272-3211.

Anthony Knight
Director
Office of Petitions

UNITED STATES PATENT AND TRADEMARK OFFICE

Commissioner for Patents
United States Patent and Trademark Office
P.O. Box 1450
Alexandria, VA 22313-1450
www.uspto.gov

JOHN BRUCKNER PC
P.O. BOX 835880
Richardson TX 75083-5880

MAILED
MAR 15 2012
OFFICE OF PETITIONS

In re Patent No. 7,408,515	:	
Issue Date: August 5, 2008	:	
Application No. 11/263,643	:	NOTICE
Filed: October 31, 2005	:	
Attorney Docket No. WIRO1300	:	

This is a notice regarding your request for acceptance of a fee deficiency submission under 37 CFR 1.28 filed February 22, 2012. On September 1, 1998, the Court of Appeals for the Federal Circuit held that 37 CFR 1.28(c) is the sole provision governing the time for correction of the erroneous payment of the issue fee as a small entity. **See DH Technology v. Synergystex International, Inc. 154 F.3d 1333, 47 USPQ2d 1865 (Fed. Cir. Sept. 1, 1998).**

The Office no longer investigates or rejects original or reissue applications under 37 CFR 1.56. **1098 Off. Gaz. Pat. Office 502 (January 3, 1989)**. Therefore, nothing in this Notice is intended to imply that an investigation was done.

Your fee deficiency submission under 37 CFR 1.28 is hereby accepted. The petition is **GRANTED**.

This application is no longer entitled to small entity status. Accordingly, all future fees paid in this application must be paid at the large entity rate.

This file is being forwarded to Files Repository.

Telephone inquiries related to this decision should be directed to the Kimberly Inabinet at (571) 272-4618.

/Kimberly Inabinet/
Kimberly Inabinet
Petitions Examiner
Office of Petitions

UNITED STATES PATENT AND TRADEMARK OFFICE

Commissioner for Patents
United States Patent and Trademark Office
P.O. Box 1450
Alexandria, VA 22313-1450
www.uspto.gov

Patent No. : 7,921,146 B2
Ser. No. : 11/263,740
Inventor(s) : Qiao et al.
Issued : Apr.. 5, 2011
Title : APPARATUS,SYSTEM,AND METHOD FOR INTERPOLATING HIGH-DIMENSIONAL, NON-LINEAR DATA
Docket No. : BLD920040032US1
Re: Request for Certificate of Correction

Consideration has been given your request for the issuance of a certificate of correction for the above-identified patent under the provisions of Rule(s) 1.322 and/or 1.323.

Assignees' names and addresses (assignment data) printed in a patent, are based *solely* on information supplied in the appropriate space for identifying the assignment data, i.e., item 3 of the Issue Fee Transmittal Form PTOL-85B. Granting of a request under 37 CFR 3.81(b) is required to correct applicant's error providing ***incorrect or erroneous*** assignment data, *before* issuance of a Certificate of Correction, under 37 CFR 1.323 *(see Manual of Patent Examining Procedures (M.P.E.P) Chp.1400, sect. 1481).* This procedure is required *at any time after the issue fee is paid,* including after issuance of the patent.

In view of the foregoing, your request, in this matter, is hereby denied.

A request to correct the Assignee under 37 CFR 3.81(b) should include:

A. **the processing fee set forth in 37 CFR 1. 17(i) (currently $130);**
B. a statement that the failure to include the correct assignee name on the PTOL-85B was inadvertent; and
C. a copy of the Notice of Recordation of Assignment Document, reflecting the reel and frame number where the assignment(s) is recorded and/or reflecting proof of *the date* the assignment was submitted for recordation.

In the Request, Applicant(s) may request that the file be forwarded to Certificates of Correction Branch, for issuance of a Certificate of Correction, if the Request is granted.

Any request under 37 CFR 3.81(b) should be directed to the following address or facsimile number:

By mail: Mail Stop PETITIONS
Commissioner for Patents
Post Office Box 1450
Alexandria, VA 22313-1450

By hand: Customer Service Window
Mail Stop Petitions
Randolph Building
401 Dulany Street
Alexandria, VA 22314

By fax: (703) 872-9306
ATTN: Office of Petitions

If a fee (currently $100) was previously submitted for consideration of a Request for Certificate of Correction, under CFR 1.323, to correct assignment data, no additional fee is required.

Ennis Young
For Mary Diggs
Decisions & Certificates
of Correction Branch
(571) **272-3435** or (703) 756-1814

UNITED STATES PATENT AND TRADEMARK OFFICE

Commissioner for Patents
United States Patent and Trademark Office
P.O. Box 1450
Alexandria, VA 22313-1450
www.uspto.gov

DUFT BORNSEN & FISHMAN, LLP
1526 SPRUCE STREET
SUITE 302
BOULDER CO 80302

MAILED
SEP 22 2011
OFFICE OF PETITIONS

In re Patent No. 7,921,146 :
Issue Date: April 5, 2011 :
Application No. 11/263,740 : ON PETITION
Filed: November 1, 2005 :
Attorney Docket No. BLD920040032US1 :

This is a decision on the petition filed September 20, 2011, which is being treated as a petition under 37 CFR 3.81(b) to add assignee Colorado State University Research Foundation on the front page of the above-identified patent by way of a certificate of correction.

The petition is **DISMISSED**.

37 CFR 3.81(b), effective June 25, 2004, reads:

> *After payment of the issue fee:* Any request for issuance of an application in the name of the assignee submitted after the date of payment of the issue fee, and any request for a patent to be corrected to state the name of the assignee, must state that the assignment was submitted for recordation as set forth in § 3.11 **before issuance of the patent**, and must include a request for a certificate of correction under § 1.323 of this chapter (accompanied by the fee set forth in § 1.20(a) and the processing fee set forth in § 1.17(i) of this chapter [emphasis added]. *See also* MPEP 1481.01.

U.S. Patent and Trademark Office assignment records disclose that an assignment reflecting the addition of Colorado State University Research Foundation as a joint assignee was recorded on July 12, 2011, **after the date of issuance of this patent**. Accordingly, since the assignment reflecting the additional assignee name was not submitted for recordation until after issuance of this patent, issuance of a certificate of correction would not be proper.

Charlema Grant
Petition Attorney
Office of Petitions

UNITED STATES PATENT AND TRADEMARK OFFICE

Commissioner for Patents
United States Patent and Trademark Office
P.O. Box 1450
Alexandria, VA 22313-1450
www.uspto.gov

DUANE MORRIS LLP - PRINCETON
PO BOX 5203
PRINCETON, NJ 08543-5203

MAILED

MAR 18 2011

OFFICE OF PETITIONS

In re Application of	:	
Barry P. Rand, et al.	:	
Application No. 11/263,865	:	DECISION GRANTING PETITION
Filed: November 2, 2005	:	UNDER 37 CFR 1.313(c)(2)
Attorney Docket No. Y3422-92101	:	

This is a decision on the petition under 37 CFR 1.313(c)(2), filed March 17, 2011, to withdraw the above-identified application from issue after payment of the issue fee.

The petition is **GRANTED**.

The above-identified application is withdrawn from issue for consideration of a submission under 37 CFR 1.114 (request for continued examination). *See* 37 CFR 1.313(c)(2).

Petitioner is advised that the issue fee paid on October 25, 2010 cannot be refunded. If, however, this application is again allowed, petitioner may request that it be applied towards the issue fee required by the new Notice of Allowance.[1]

Telephone inquiries regarding this decision should be directed to undersigned at (571) 272-1642. All other inquiries concerning the examination or status of this application should be directed to the Technology Center.

This application is being referred to Technology Center AU 1795 for processing of the request for continued examination under 37 CFR 1.114 and for consideration of the concurrently filed information disclosure statement.

/AMW/
April M. Wise
Petitions Examiner
Office of Petitions

[1] *The request to apply the issue fee to the new Notice may be satisfied by completing and returning the new Part B – Fee(s) Transmittal Form (along with any balance due at the time of submission). Petitioner is advised that the Issue Fee Transmittal Form must be completed and timely submitted to avoid abandonment of the application.*

UNITED STATES PATENT AND TRADEMARK OFFICE

Commissioner for Patents
United States Patent and Trademark Office
P.O. Box 1450
Alexandria, VA 22313-1450
www.uspto.gov

BARDMESSER LAW GROUP, P.C.
1025 CONNECTICUT AVENUE, N.W.
SUITE 1000
WASHINGTON DC 20006

MAILED
JAN 24 2011
OFFICE OF PETITIONS

In re Application of :
Tormasov, et al. :
Application No. 11/264,098 : ON PETITION
Filed: November 2, 2005 :
Attorney Docket No. 2230.0520000 :
For: SYSTEM AND METHOD FOR CONTROLLING INSTALLED THIRD PARTY SOFTWARE COMPONENTS

This is a decision on the petition under 37 CFR 1.137(b), filed November 15, 2010, to revive the above-identified application.

The petition under 37 CFR 1.137(b) is **GRANTED**.

This application became abandoned for failure to timely reply to the Notice to File Corrected Application Papers, mailed August 6, 2010, which set a two month shortened statutory period for reply. No reply being received in the Office, this application became abandoned on October 7, 2010. The filing of the present petition precedes the mailing of a Notice of Abandonment.

Applicants have submitted a proper reply to the August 6, 2010 Notice in the form of an amendment to the specification to add brief descriptions of Figures 6 and 7, an acceptable statement of the unintentional nature of the delay in responding to the August 6, 2010 Notice, and the $1,620.00 petition fee. Accordingly, the petition under 37 CFR 1.137(b) is granted.

After the mailing of this decision, the file will be returned to the Office of Data Management.

Telephone inquiries concerning this matter may be directed to the undersigned at (571) 272-3230.

Shirene Willis Brantley
Senior Petitions Attorney
Office of Petitions

UNITED STATES PATENT AND TRADEMARK OFFICE

Commissioner for Patents
United States Patent and Trademark Office
P.O. Box 1450
Alexandria, VA 22313-1450
www.uspto.gov

MAILED
APR 15 2011
OFFICE OF PETITIONS

WINSTEAD PC
P.O. BOX50784
DALLAS TX 75201

In re Application of	:	
SIM-TANG, et al	:	
Application No. 11/264,110	:	NOTICE
Filed: November 1, 2005	:	
Attorney Docket No. 50439-P022US	:	

This is a notice regarding your request for acceptance of a fee deficiency submission under 37 CFR 1.28. On September 1, 1998, the Court of Appeals for the Federal Circuit held that 37 CFR 1.28(c) is the sole provision governing the time for correction of the erroneous payment of the issue fee as a small entity. **See DH Technology v. Synergystex International, Inc. 154 F.3d 1333, 47 USPQ2d 1865 (Fed. Cir. Sept. 1, 1998).**

The Office no longer investigates or rejects original or reissue applications under 37 CFR 1.56. **1098 Off. Gaz. Pat. Office 502 (January 3, 1989)**. Therefore, nothing in this Notice is intended to imply that an investigation was done.

Your fee deficiency submission under 37 CFR 1.28 is hereby **ACCEPTED**.

This application is no longer entitled to small entity status. Accordingly, all future fees paid in this application must be paid at the large entity rate.

Inquiries related to this communication should be directed to Diane Goodwyn at (571) 272-6735.

Thurman K. Page
Petitions Examiner
Office of Petitions

UNITED STATES PATENT AND TRADEMARK OFFICE

Commissioner for Patents
United States Patent and Trademark Office
P.O. Box 1450
Alexandria, VA 22313-1450
www.uspto.gov
DIW Aug-10

RICHARD L HUFF
19304 OLNEY MILL ROAD
OLNEY MD 20832

MAILED

AUG 12 2010

OFFICE OF PETITIONS

In re Application of :
Ronald D. Green :
Application Number: 11/264164 :
Filing Date: 11/02/2005 :
Attorney Docket Number: :
GREE2100 :

ON PETITION

This is a decision on the petition under 1.137(b), filed on May 10, 2010, to revive the above-identified application.

The petition is **GRANTED**.

This application became abandoned on November 12, 2009, for failure to timely file a proper reply to the final Office action mailed on August 11, 2009, which set a three (3) month shortened statutory period for reply. No extensions of time under 37 CFR 1.136(a) were obtained. Notice of Abandonment was mailed on March 3, 2010.

Petitioner has filed a Notice of Appeal, accompanied by an Appeal Brief, as the required reply.

The Notice of Appeal filed May 10, 2010, has been entered and made of record. Accordingly, the two (2)-month period for filing the Appeal Brief, accompanied by the fee required by law, runs from the date of this decision.

Receipt of an Appeal Brief filed on May 10, 2010 is also acknowledged.

The application will be forwarded to Technology Center 3751 for further processing.

Telephone inquiries concerning this matter may be directed to the undersigned at (571)272-3231.

D Wood

Douglas I. Wood
Senior Petitions Attorney
Office of Petitions

UNITED STATES PATENT AND TRADEMARK OFFICE

Commissioner for Patents
United States Patent and Trademark Office
P.O. Box 1450
Alexandria, VA 22313-1450
www.uspto.gov

BLAKELY SOKOLOFF TAYLOR & ZAFMAN LLP
1279 OAKMEAD PARKWAY
SUNNYVALE CA 94085-4040

MAILED
MAY 23 2011
OFFICE OF PETITIONS

In re Application of	:	
Chris SAVARESE et al.	:	
Application No. 11/264,177	:	DECISION ON PETITION
Filed: October 31, 2005	:	
Attorney Docket No. 06196.P001X	:	

This is a decision on the petition, filed February 04, 2011, which is being treated as a petition under 37 CFR 1.8(b), requesting withdrawal of the holding of abandonment in the above-identified application.

The petition is **GRANTED**.

The application became abandoned for failure to submit formal drawings in a timely manner in reply to the Notice of Allowability, mailed August 23, 2010, which set a period for reply of three (3) months. Accordingly, this application became abandoned on November 24, 2010.

Petitioner asserts that a timely reply was mailed on October 31, 2005 and May 21, 2010. Petitioner requests the withdrawal of the abandonment and approval of the twice-submitted petition under 37 CFR 1.84 and issuance of a U.S. Patent for allowed claims.

A review of the Office records indicates that the drawings were received by the Office on October 31, 2005 and May 21, 2005. The Office regrets the mistake of not entering the petition. In view of the Examiner's Amendment of August 23, 2010, the replacement drawings submitted May 21, 2010 are acceptable quality for entry into the application.

The petition satisfies the above requirements of 37 CFR 1.8(b). Accordingly, the holding of abandonment for failure to timely file a reply to the Office action of August 23, 2010 is hereby withdrawn.

Telephone inquiries concerning this decision should be directed to Michelle R. Eason at (571) 272-4231.

This application is being referred to the Technology Center AU 3714 for review of the petition under CFR 1.84 and for the mailing a Supplemental Notice of Allowability upon the granting of the replacement drawings received on May 21, 2010.

Thurman K. Page
Petitions Examiner
Office of Petitions

UNITED STATES PATENT AND TRADEMARK OFFICE

UNITED STATES DEPARTMENT OF COMMERCE
United States Patent and Trademark Office
Address: COMMISSIONER FOR PATENTS
P.O. Box 1450
Alexandria, Virginia 22313-1450
www.uspto.gov

APPLICATION NO.	FILING DATE	FIRST NAMED INVENTOR	ATTORNEY DOCKET NO.	CONFIRMATION NO.
11/264,177	10/31/2005	Chris Savarese	06196.P001X	8694

8791 7590 07/28/2011
BLAKELY SOKOLOFF TAYLOR & ZAFMAN LLP
1279 OAKMEAD PARKWAY
SUNNYVALE, CA 94085-4040

EXAMINER
MCCULLOCH JR, WILLIAM H

ART UNIT	PAPER NUMBER
3714	

MAIL DATE	DELIVERY MODE
07/28/2011	PAPER

Please find below and/or attached an Office communication concerning this application or proceeding.

The time period for reply, if any, is set in the attached communication.

UNITED STATES PATENT AND TRADEMARK OFFICE

Commissioner for Patents
United States Patent and Trademark Office
P.O. Box 1450
Alexandria, VA 22313-1450
www.uspto.gov

July 27, 2011

BLAKELY SOKOLOFF TAYLOR & ZAFMAN LLP
1279 OAKMEAD PARKWAY
SUNNYVALE CA 94085-4040

In re Application of	:	
Chris Savarese et al.	:	**DECISION ON PETITION**
Application No. 11264177	:	
Filed: 10/31/2005	:	
Attorney Docket No. **06196.P001X**	:	

This is a decision on the Petition to Accept Color Drawings under 37 C.F.R 1.84 (a) (2), received in the United States Patent and Trademark Office (USPTO) May 21, 2010.

The petition is **DISMISSED.**

A grantable petition under 37 C.F.R. 1.84(a) (2) must be accompanied by the following.

1. The fee set forth under 37 C.F.R. 1.17(h),
2. Three (3) sets of the color drawings in question, (One (1) set for EFW filings, and
3. The specification containing the following language as the first paragraph in that portion of the specification relating to the brief description of the drawings

"The patent or application file contains at least one drawing executed in color. Copies of this patent or patent application publication with color drawing(s) will be provided by the Office upon request and payment of the necessary fee."

The petition did not meet the following requirement(s). 1 ☐ 2 ☑ 3 ☐
A renewed petition filed under 37 C.F.R. 1.84 (a) (2) must be filed within TWO (2) MONTHS of this decision. If a renewed petition is not filed within the TWO (2) Months of this decision the drawings will be printed in black and white.

Telephone inquires relating to this decision may be directed to the undersigned in the Office of Data Management at 571-272-4200.

/Laura L. Feldman/
Quality Control Specialist
Office of Data Management
Publications Branch

UNITED STATES PATENT AND TRADEMARK OFFICE

Commissioner for Patents
United States Patent and Trademark Office
P.O. Box 1450
Alexandria, VA 22313-1450
www.uspto.gov

In re Patent No. 7124584
Issue Date: October 24,2006
Application No. 11264180
Filed: October 31,2005
Attorney Docket No. 155772_1

:
:DECISION GRANTING PETITION
:UNDER 37 CFR 1.378(c)
:

This is a decision on the electronic petition, filed March 16,2011 ,under 37 CFR 1.378(c) to accept the unintentionally delayed payment of the 3.5 year maintenance fee for the above-identified patent.

The petition is **GRANTED**.

The maintenance fee is accepted, and the above-identified patent reinstated as of March 16,2011 . This decision also constitutes notice that the fee has been accepted. An electronic copy of the petition and this decision has been created as an entry in the Image File Wrapper. Nevertheless, petitioner should print and retain an independent copy.

Telephone inquiries related to this electronic decision should be directed to the Electronic Business Center at 1-866-217-9197.

PTO/SB/66 (03-09)
Approved for use through 03/31/2012. OMB 0651-0016
U.S. Patent and Trademark Office: U.S. DEPARTMENT OF COMMERCE
Under the Paperwork Reduction Act of 1995, no persons are required to respond to a collection of information unless it displays valid OMB control number.

PETITION TO ACCEPT UNINTENTIONALLY DELAYED PAYMENT OF MAINTENANCE FEE IN AN EXPIRED PATENT (37 CFR 1.378(c))

Patent Number	Issue Date (YYYY-MM-DD)	Application Number	Filing Date (YYYY-MM-DD)	Docket Number (if applicable)
7124584	2006-10-24	11264180	2005-10-31	155772_1

CAUTION: Maintenance fee (and surcharge, if any) payment must correctly identify: (1) the patent number and (2) the application number of the actual U.S. application leading to issuance of that patent to ensure the fee(s) is/are associated with the correct patent. 37 CFR 1.366(c) and (d).

SMALL ENTITY
☐ Patentee claims, or has previously claimed, small entity status. See 37 CFR 1.27.

LOSS OF ENTITLEMENT TO SMALL ENTITY STATUS
☐ Patentee is no longer entitled to small entity status. See 37 CFR 1.27(g)

NOT Small Entity			Small Entity		
	Fee	Code		Fee	Code
◉	3 ½ year	(1551)	○	3 ½ year	(2551)
○	7 ½ year	(1552)	○	7 ½ year	(2552)
○	11 ½ year	(1553)	○	11 ½ year	(2553)

SURCHARGE
The surcharge required by 37 CFR 1.20(i)(2) (Fee Code 1558) must be paid as a condition of accepting unintentionally delayed payment of the maintenance fee.

MAINTENANCE FEE (37 CFR 1.20(e)-(g))
The appropriate maintenance fee must be submitted with this petition.

STATEMENT
THE UNDERSIGNED CERTIFIES THAT THE DELAY IN PAYMENT OF THE MAINTENANCE FEE TO THIS PATENT WAS UNINTENTIONAL

PETITIONER(S) REQUEST THAT THE DELAYED PAYMENT OF THE MAINTENANCE FEE BE ACCEPTED AND THE PATENT REINSTATED

THIS PORTION MUST BE COMPLETED BY THE SIGNATORY OR SIGNATORIES

37 CFR 1.378(d) states: "Any petition under this section must be signed by an attorney or agent registered to practice before the Patent and Trademark Office, or by the patentee, the assignee, or other party in interest."

I certify, in accordance with 37 CFR 1.4(d)(4) that I am

◉ An attorney or agent registered to practice before the Patent and Trademark Office

○ A sole patentee

○ A joint patentee; I certify that I am authorized to sign this submission on behalf of all the other patentees.

○ A joint patentee; all of whom are signing this e-petition

○ The assignee of record of the entire interest

Under the Paperwork Reduction Act of 1995, no persons are required to respond to a collection of information unless it displays valid OMB control number.

Patent Practitioner			
A signature of the applicant or representative is required in accordance with 37 CFR 1.33 and 10.18. Please see 37 CFR 1.4(d) for the form of the signature			
Signature	/mac39148/	Date (YYYY-MM-DD)	2011-03-16
Name	Mark A. Conklin	Registration Number	39148

This collection of information is required by 37 CFR 1.378(c). The information is required to obtain or retain a benefit by the public which is to file (and by the USPTO to process) an application. Confidentiality is governed by 35 U.S.C. 122 and 37 CFR 1.11 and 1.14. This collection is estimated to take 1 hour to complete, including gathering, preparing, and submitting the completed application form to the USPTO. Time will vary depending upon the individual case. Any comments on the amount of time you require to complete this form and/ or suggestions for reducing this burden, should be sent to the Chief Information Officer, U.S. Patent and Trademark Office, U.S. Department of Commerce, P.O. Box 1450, Alexandria, VA 22313-1450. DO NOT SEND FEES OR COMPLETED FORMS TO THIS ADDRESS. **This form can only be used when in conjunction with EFS-Web. If this form is mailed to the USPTO, it may cause delays in reinstating the patent.**

Privacy Act Statement

The Privacy Act of 1974 (P.L. 93-579) requires that you be given certain information in connection with your submission of the attached form related to a patent application or patent. Accordingly, pursuant to the requirements of the Act, please be advised that: (1) the general authority for the collection of this information is 35 U.S.C. 2(b)(2); (2) furnishing of the information solicited is voluntary; and (3) the principal purpose for which the information is used by the U.S. Patent and Trademark Office is to process and/or examine your submission related to a patent application or patent. If you do not furnish the requested information, the U.S. Patent and Trademark Office may not be able to process and/or examine your submission, which may result in termination of proceedings or abandonment of the application or expiration of the patent.

The information provided by you in this form will be subject to the following routine uses:

1. The information on this form will be treated confidentially to the extent allowed under the Freedom of Information Act (5 U.S.C. 552) and the Privacy Act (5 U.S.C. 552a). Records from this system of records may be disclosed to the Department of Justice to determine whether the Freedom of Information Act requires disclosure of these records.

2. A record from this system of records may be disclosed, as a routine use, in the course of presenting evidence to a court, magistrate, or administrative tribunal, including disclosures to opposing counsel in the course of settlement negotiations.

3. A record in this system of records may be disclosed, as a routine use, to a Member of Congress submitting a request involving an individual, to whom the record pertains, when the individual has requested assistance from the Member with respect to the subject matter of the record.

4. A record in this system of records may be disclosed, as a routine use, to a contractor of the Agency having need for the information in order to perform a contract. Recipients of information shall be required to comply with the requirements of the Privacy Act of 1974, as amended, pursuant to 5 U.S.C. 552a(m).

5. A record related to an International Application filed under the Patent Cooperation Treaty in this system of records may be disclosed, as a routine use, to the International Bureau of the World Intellectual Property Organization, pursuant to the Patent Cooperation Treaty.

6. A record in this system of records may be disclosed, as a routine use, to another federal agency for purposes of National Security review (35 U.S.C. 181) and for review pursuant to the Atomic Energy Act (42 U.S.C. 218(c)).

7. A record from this system of records may be disclosed, as a routine use, to the Administrator, General Services, or his/her designee, during an inspection of records conducted by GSA as part of that agency's responsibility to recommend improvements in records management practices and programs, under authority of 44 U.S.C. 2904 and 2906. Such disclosure shall be made in accordance with the GSA regulations governing inspection of records for this purpose, and any other relevant (i.e., GSA or Commerce) directive. Such disclosure shall not be used to make determinations about individuals.

8. A record from this system of records may be disclosed, as a routine use, to the public after either publication of the application pursuant to 35 U.S.C. 122(b) or issuance of a patent pursuant to 35 U.S.C. 151. Further, a record may be disclosed, subject to the limitations of 37 CFR 1.14, as a routine use, to the public if the record was filed in an application which became abandoned or in which the proceedings were terminated and which application is referenced by either a published application, an application open to public inspections or an issued patent.

9. A record from this system of records may be disclosed, as a routine use, to a Federal, State, or local law enforcement agency, if the USPTO becomes aware of a violation or potential violation of law or regulation.

UNITED STATES PATENT AND TRADEMARK OFFICE

UNITED STATES DEPARTMENT OF COMMERCE
United States Patent and Trademark Office
Address: COMMISSIONER FOR PATENTS
P.O. Box 1450
Alexandria, Virginia 22313-1450
www.uspto.gov

APPLICATION NO.	FILING DATE	FIRST NAMED INVENTOR	ATTORNEY DOCKET NO.	CONFIRMATION NO.
11/264,221	11/01/2005	Andres Claudio Altmann	BIO5096USNP	5104

27777 7590 07/08/2011
PHILIP S. JOHNSON
JOHNSON & JOHNSON
ONE JOHNSON & JOHNSON PLAZA
NEW BRUNSWICK, NJ 08933-7003

EXAMINER
FERNANDEZ, KATHERINE L

ART UNIT	PAPER NUMBER
3768	

NOTIFICATION DATE	DELIVERY MODE
07/08/2011	ELECTRONIC

Please find below and/or attached an Office communication concerning this application or proceeding.

The time period for reply, if any, is set in the attached communication.

Notice of the Office communication was sent electronically on above-indicated "Notification Date" to the following e-mail address(es):

jnjuspatent@corus.jnj.com
lhowd@its.jnj.com
gsanche@its.jnj.com

UNITED STATES PATENT AND TRADEMARK OFFICE

Commissioner for Patents
United States Patent and Trademark Office
P.O. Box 1450
Alexandria, VA 22313-1450
www.uspto.gov

PHILIP S. JOHNSON
JOHNSON & JOHNSON
ONE JOHNSON & JOHNSON PLAZA
NEW BRUNSWICK NJ 08933-7003

In re Application of:
ALTMANN, ANDRES CLAUDIO et al
Serial No.: 11/264,221
Filed: Nov. 1, 2005
Docket: BIO5096USNP
Title: CONTROLLING DIRECTION OF ULTRASOUND IMAGING CATHETER

DECISION ON PETITION
UNDER 37 CFR 1.91

This is a decision on the petition for request entry of exhibit filed under 37 CFR 1.91.

The petition filed on Feb. 9, 2010 requests entry of exhibit of a Rule 131 Declaration with a compact disk filed under 37 CFR 1.91[1] and includes the required petition and the required fee as set forth in 37 CFR 1.17(h). The petition fee of $130.00 was paid in accordance with 37 CFR 1.17(h).

The request to enter the exhibit and the petition comply with the requirements as set forth in 37 CFR 1.91. Accordingly, the requested entry of the exhibit in the file record is granted. Currently, the exhibit has been placed in a separate artifact file for the examiner's consideration.

The application is being forwarded to the examiner for consideration of the compact disks filed on Feb. 9, 2010. Telephone inquiries concerning this decision should be directed to Henry C. Yuen at 571-272-4856.

[1] § 1.91 Models or exhibits not generally admitted as part of application or patent. (a) A model or exhibit will not be admitted as part of the record of an application unless it: (1) Substantially conforms to the requirements of § 1.52 or § 1.84; (2) Is specifically required by the Office; or (3) Is filed with a petition under this section including: (i) The fee set forth in § 1.17(h); and (ii) An explanation of why entry of the model or exhibit in the file record is necessary to demonstrate patentability. (b) Notwithstanding the provisions of paragraph (a) of this section, a model, working model, or other physical exhibit may be required by the Office if deemed necessary for any purpose in examination of the application. (c) Unless the model or exhibit substantially conforms to the requirements of § 1.52 or § 1.84 under paragraph (a)(1) of this section, it must be accompanied by photographs that show multiple views of the material features of the model or exhibit and that substantially conform to the requirements of § 1.84.

Petition is **granted**.

Angela D. Sykes, Director
Technology Center 3700

UNITED STATES PATENT AND TRADEMARK OFFICE

Commissioner for Patents
United States Patent and Trademark Office
P.O. Box 1450
Alexandria, VA 22313-1450
www.uspto.gov

SUTHERLAND ASBILL & BRENNAN LLP
999 PEACHTREE STREET, NE
ATLANTA GA 30309-3996

MAILED

NOV 22 2010

OFFICE OF PETITIONS

In re Application
Nancy E. Harding et al.
Application No. 11/264,268
Filed: November 1, 2005
Attorney Docket No. 05-506
(29776-0008)

: DECISION ON APPLICATION
: FOR PATENT TERM ADJUSTMENT

This is in response to the REQUEST FOR RECONSIDERATION UNDER 37 C.F.R. § 1.705(b) OF PATENT TERM ADJUSTMENT filed October 27, 2010. Applicant requests that the determination of patent term adjustment be corrected from 734 to 1048 days. Applicant requests this correction in part on the basis that the Office will take in excess of three years to issue this patent and is considered in light of the recent court decision in light of the Court of Appeals for the Federal Circuit's decision in *Wyeth v. Kappos*, 2009-1120 (Fed. Cir. 1-7-2010).

As the instant application for patent term adjustment requests reconsideration of the patent term adjustment as it relates to the Office's failure to issue the patent within three years of the filing date, the application for patent term adjustment under 37 CFR 1.705(b) is **DISMISSED as PREMATURE**.

Knowledge of the actual date the patent issues is required to calculate the amount, if any, of additional patent term patentees are entitled to for Office failure to issue the patent within three years. See 37 CFR 1.702(b). (This is true even where a request for continued examination (RCE) was filed). The computer will not undertake the § 1.702(b) calculation until the actual date of issuance of the patent has been determined. Likewise, the computer will not calculate any further Office delay under 37 CFR 1.702(a)(4) or applicant delay under 37 CFR 1.704(c)(10) until the actual date of issuance of the patent has been determined. As such, the Office cannot make a determination on the patent term adjustment relating to those provisions until the patent has issued.

Requesting reconsideration of the patent term adjustment to be indicated on the patent under 37 CFR 1.705(b) based on the initial determination of patent term adjustment

and a projected issuance date of the patent (or even the filing date of the request for continued examination) is premature. Accordingly, it is appropriate to dismiss such a request as premature.

Rather than file an application for patent term adjustment under 37 CFR 1.705(b) contesting the 37 CFR 1.702(b) calculation at the time of the mailing of the notice of allowance, applicants are advised that they may wait until the time of the issuance of the patent and file a request for reconsideration of the patent term adjustment pursuant to 37 CFR 1.705(d). As the USPTO does not calculate the amount of time earned pursuant to 37 CFR 1.702(b) until the time of the issuance of the patent, the Office will consider any request for reconsideration of the patent term adjustment due to an error in the calculation of 37 CFR 1.702(b) to be timely if the request for reconsideration is filed within two months of the issuance of the patent. However, as to all other bases for contesting the initial determination of patent term adjustment received with the notice of allowance, applicants must timely file an application for patent term adjustment prior to the payment of the issue fee.[1]

The Office acknowledges submission of the $200.00 fee set forth in 37 CFR 1.18(e) for consideration of the application for patent term adjustment under 37 CFR 1.705(b).

Any request for reconsideration of the patent term adjustment indicated on the patent must be timely filed within two months after issuance pursuant to 37 CFR 1.705(d) and must include payment of the required fee under 37 CFR 1.18(e).

The Office of Data Management has been advised of this decision. This application is being referred to the Office of Data Management for issuance of the patent.

Telephone inquiries specific to this decision should be directed to the undersigned at (571) 272-3212.

Patricia Faison-Ball

Patricia Faison-Ball
Senior Petitions Attorney
Office of Petitions

[1] For example, if applicants dispute both the calculation of patent term adjustment under 37 CFR 1.702(a)(1) for Office failure to mail a first Office action or notice of allowance not later than fourteen months after the date on which the application was filed, and under 37 CFR 1.702(b) for Office failure to issue a patent within three years of the actual filing date of the application, then applicants must still timely file an application for patent term adjustment prior to the payment of the issue fee to contest the calculation of Office delay in issuing a first Office action or notice of allowance. See 37 CFR 1.705(b) and 35 U.S.C. 154(b)(3)(B). A dispute as to the calculation of the § 1.702(a)(1) period raised on request for reconsideration of patent term adjustment under 37 CFR 1.705(d) will be dismissed as untimely filed.

UNITED STATES PATENT AND TRADEMARK OFFICE

Commissioner for Patents
United States Patent and Trademark Office
P.O. Box 1450
Alexandria, VA 22313-1450
www.uspto.gov

JOHN C. STRINGHAM
WORKMAN I NYDEGGER
1000 EAGLE GATE TOWER
60 EAST SOUTH TEMPLE
SALT LAKE CITY, UT 84111

MAILED

AUG 13 2010

OFFICE OF PETITIONS

In re Patent No. 7,573,400 :
Issue Date: August 11, 2009 :
Application No. 11/264,339 : NOTICE
Filed: October 31, 2005 :
Attorney Docket No. 15455.6

This is a notice regarding your request for acceptance of a fee deficiency submission under 37 CFR 1.28. On September 1, 1998, the Court of Appeals for the Federal Circuit held that 37 CFR 1.28(c) is the sole provision governing the time for correction of the erroneous payment of the issue fee as a small entity. **See DH Technology v. Synergystex International, Inc. 154 F.3d 1333, 47 USPQ2d 1865 (Fed. Cir. Sept. 1, 1998).**

The Office no longer investigates or rejects original or reissue applications under 37 CFR 1.56. **1098 Off. Gaz. Pat. Office 502 (January 3, 1989)**. Therefore, nothing in this Notice is intended to imply that an investigation was done.

Your fee deficiency submission under 37 CFR 1.28 is hereby **ACCEPTED**.

Inquiries related to this communication should be directed to Irvin Dingle at (571) 272-3210.

Irvin Dingle
Petitions Examiner
Office of Petitions

UNITED STATES PATENT AND TRADEMARK OFFICE

Commissioner for Patents
United States Patent and Trademark Office
P.O. Box 1450
Alexandria, VA 22313-1450
www.uspto.gov

PHILIP S JOHNSON
JOHNSON & JOHNSON
ONE JOHNSON & JOHNSON PLAZA
NEW BRUNSWICK NJ 08933-7003

MAILED
MAR 14 2011
OFFICE OF PETITIONS

In re Application	:
Parsons, et al.	: DECISION ON APPLICATION FOR
Application No. 11/264,471	: PATENT TERM ADJUSTMENT
Filed: October 31, 2005	:
Attorney Docket No. 1672-0104	:
	:

This letter is in response to the "APPLICATION FOR PATENT TERM ADJUSTMENT FOR PATENT APPLICATION UNDER 37 C.F.R. §1.705(b)", filed January 5, 2011. Applicants request that the initial determination of patent term adjustment under 35 U.S.C. 154(b) be corrected from zero (0) days to three hundred twenty-nine (329) days.

The application for patent term adjustment is **DISMISSED**.

On October 5, 2010, the Office mailed the Determination of Patent Term Adjustment under 35 U.S.C. 154(b) in the above identified application. The Notice stated that the patent term adjustment (PTA) to date is eighty-nine (89) days. On January 5, 2011, Applicants timely[1] submitted an application for patent term adjustment, asserting that the correct number of days of PTA at the time of the mailing of the Notice of Allowance is one hundred eleven (111) days.

Applicants state that the patent issuing from the application is not subject to a terminal disclaimer.

The Office initially determined a patent term adjustment of eighty-nine (89) days based on an adjustment for PTO delay of two hundred thirty-nine (239) day pursuant to 37 C.F.R. § 1.703(a)(1) and seven (7) days pursuant to 37 CFR 1.703(a)(2), reduced by three instances of

[1] Applicants filed the application for patent term adjustment on the same date as the issue fee.

Applicant delay under 35 CFR 1.704(b) of thirty-five (35), sixty-one (61), and sixty-one (61) days. The 239 days of PTO delay is at issue.

Applicants argue that the adjustment under 37 CFR 1.703(a)(1) should have stopped when the USPTO mailed a non-final Office action restarting the period for reply on September 18, 2007, not when the USPTO mailed an earlier non-final Office action on August 27, 2007. Applicants' argument has been considered, but is not persuasive.

The fact that subsequent to mailing the August 27, 2007 Office action, the USPTO mailed another non-final action on September 18, 2007, does not warrant treating August 27, 2007 Office action as void *ab initio* and as if the USPTO had never issued the Office action. The USPTO appreciates that there may be situations in which it is appropriate to treat an Office action or notice issued in an application as void *ab initio* and as if the USPTO had never issued the Office action. However, these would be extremely rare situations, such as the issuance of an Office action or notice by an employee who does not have the authority to issue that type of Office action or notice, the issuance of an Office action or notice in the wrong application, or the issuance of an Office action or notice containing language not appropriate for inclusion in an official document. In essence, the situations in which it is appropriate to treat an Office action or notice issued in an application as void *ab initio* and as if the USPTO had never issued the Office action are the situations in which it is appropriate to expunge an Office action or notice from the USPTO's record of the application. That is simply not the case here.

Pursuant to 35 U.S.C. § 154(b)(1)(A)(i), patentees are entitled to day-to-day adjustment if the USPTO delays the mailing of an action under 35 U.S.C. § 132 or a Notice of Allowance within fourteen months from the filing date of the application. The record of the instant application indisputably indicates that the USPTO entered an action under 35 U.S.C. § 132, specifically a non-final Office action, on August 27, 2007, 239 days after the 14 months in which the USPTO had to mail such an action. The fact that the Office action of September 18, 2007 reset the period for reply does not negate the fact that the Office responded within the meaning of 35 U.S.C. § 154(b)(1)(A)(i) and 37 CFR 1.703(a)(1) on August 27, 2007. Unless expunged from the record (which is not warranted in this situation), for purposes of calculating patent term adjustment, the Office action entered by the examiner on August 27, 2007, was properly used to determine whether the USPTO delayed the issuance of the instant application by mailing an action under 35 U.S.C. § 132 or a Notice of Allowance within fourteen months from the filing date of the application. *See Changes to Implement Patent Term Adjustment under Twenty-Year Patent Term*, 65 Fed. Reg. 54366 (Sept. 18, 2000) (final rule).

In view thereof, the correct determination of patent term adjustment at the time of the mailing of the Notice of Allowance is **eighty-nine (89)** days (246 (239+7) days of PTO delay reduced by 157 (35+61+61) days of applicant delay).

Receipt of the $200.00 fee set forth in 37 CFR 1.18(e) is acknowledged.

The application is being forwarded to the Office of Data Management for processing into a patent.

Telephone inquiries specific to this matter should be directed to Cliff Congo, Petitions Attorney, at (571)272-3207.

Anthony Knight
Director
Office of Petitions

UNITED STATES PATENT AND TRADEMARK OFFICE

Commissioner for Patents
United States Patent and Trademark Office
P.O. Box 1450
Alexandria, VA 22313-1450
www.uspto.gov

MCDERMOTT WILL & EMERY LLP
600 13TH STREET, NW
WASHINGTON DC 20005-3096

MAILED
JAN 18 2012
OFFICE OF PETITIONS

In re Application of	:	
VRCELJ, et al	:	
Application No. 11/264,532	:	DECISION ON PETITION
Filed: October 31, 2005	:	
Attorney Docket No. 087124-0851	:	

This is a decision on the petition under 37 CFR 1.182, filed, October 26, 2011, to change the order of the named inventors in the above-identified application.

The petition is **DISMISSED**.

The issue fee in this application was paid on October 14, 2011. Effective May 29, 2000, the Office changed the practice by clarifying that an amendment under 37 CFR 1.312 (after allowance) must be filed prior to or with payment of the issue fee, and eliminated 37 CFR 1.312(b). Since a change to the order of the inventors' names is an amendment to the application, and amendments are not permitted after the payment of the issue fee, a petition under 37 CFR 1.182 to change the order of the inventors' names cannot be granted.

As authorized, the $400 fee for the petition under 37 CFR 1.182 has been assessed to petitioner's deposit account.

Further correspondence with respect to this matter should be delivered through one of the following mediums:

By mail: Mail Stop PETITIONS
Commissioner for Patents
Post Office Box 1450
Alexandria, VA 22313-1450

By hand: Customer Service Window
Mail Stop Petitions
Randolph Building
401 Dulany Street
Alexandria, VA 22314

By fax: (571) 273-8300
ATTN: Office of Petitions

By internet: EFS-Web[1]

Any questions concerning this matter may be directed to Diane Goodwyn at (571) 272-6735.

Thurman K. Page
Petitions Examiner
Office of Petitions

[1] www.uspto.gov/ebc/efs_help.html (for help using EFS-Web call the Patent Electronic Business Center at (866) 217-9197)

UNITED STATES PATENT AND TRADEMARK OFFICE

Commissioner for Patents
United States Patent and Trademark Office
P.O. Box 1450
Alexandria, VA 22313-1450
www.uspto.gov

HARNESS, DICKEY & PIERCE P.L.C.
5445 CORPORATE DRIVE
SUITE 200
TROY, MI 48098

MAILED
DEC 07 2010
OFFICE OF PETITIONS

In re Application of :
Jorge Vicente Blasco Claret, et al. :
Application No. 11/264,621 : ON PETITION
Filed: November 11, 2005 :
Attorney Docket No. MP3753 :

This is a decision on the petition under the unintentional provisions of 37 CFR 1.137(b), filed October 14, 2010, to revive the above-identified application.

The petition is **GRANTED**.

The application became abandoned for failure to timely file a reply within the meaning of 37 CFR 1.113 to the final Office action of October 15, 2009. The proposed reply required for consideration of a petition to revive must be a Notice of Appeal (and appeal fee required by 37 CFR 41.20(b)(2), an amendment that *prima facie* places the application in condition for allowance, a Request for Continued Examination and submission (37 CFR 1.114), or the filing of a continuing application under 37 CFR 1.53(b). See MPEP 711.03(c)(II)(A)(2). No extensions of time pursuant to the provisions of 37 CFR 1.136(a) were obtained. Accordingly, the date of abandonment of this application is January 16, 2010.

The petition satisfies the requirements of 37 CFR 1.137(b) in that petitioner has supplied (1) the reply in the form of a Request for Continued Examination (RCE) and fee of $810, and the submission required by 37 CFR 1.114; (2) the petition fee of $1620; and (3) a proper statement of unintentional delay.

The application file does not indicate a change of address has been filed in this case, although the address given on the petition differs from the address of record. A change of address should be filed in this case in accordance with MPEP 601.03. A courtesy copy of this decision is being mailed to the address noted on the petition. However, until otherwise instructed, all future correspondence regarding this application will be mailed solely to the address of record.

Telephone inquiries concerning this decision should be directed to the undersigned at (571) 272-1642. All other inquiries concerning the examination or status of this application should be directed to the Technology Center.

This application is being referred to Technology Center AU 2611 for processing of the RCE and for appropriate action by the Examiner in the normal course of business on the amendment submitted in accordance with 37 CFR 1.114.

April M. Wise
Petitions Examiner
Office of Petitions

cc: DAMIAN M. AQUINO
PO BOX 828
BLOOMFIELD HILLS, MI 48308

UNITED STATES PATENT AND TRADEMARK OFFICE

Commissioner for Patents
United States Patent and Trademark Office
P.O. Box 1450
Alexandria, VA 22313-1450
www.uspto.gov

COOLEY GODWARD KRONISH LLP
ATTN: Patent Group
Suite 500
1200-19th Street NW
Washington DC 20036-2402

MAILED

APR 25 2011

OFFICE OF PETITIONS

In re Application of	:	
Ricardo Polo-Malouvier, et al.	:	
Application No. 11/264,633	:	DECISION ON PETITION
Filed: October 31, 2005	:	TO WITHDRAW
Attorney Docket No. BOBJ-025/01US 304661-2093	:	FROM RECORD

This is a decision on the Request to Withdraw as attorney or agent of record under 37 C.F.R. § 1.36(b), filed March 22, 2011.

The request is **NOT APPROVED** because it is moot.

A review of the file record indicates that the power of attorney to Cooley Godward Kronish LLP has been changed in the patent application on October 31, 2008. Accordingly, the request to withdraw under 37 C.F.R. § 1.36(b) is moot.

All future communications from the Office will continue to be directed to the below-listed address until otherwise notified by applicant.

Telephone inquires concerning this decision should be directed to Terri Johnson at 571-272-2991.

/Terri Johnson/
Terri Johnson
Petitions Examiner
Office of Petitions

cc: **SAP GLOBAL c/o Cooley Godward Kronish LLP**
777 6th Street NW, Suite 1100
Washington, DC 20001

UNITED STATES PATENT AND TRADEMARK OFFICE

Commissioner for Patents
United States Patent and Trademark Office
P.O. Box 1450
Alexandria, VA 22313-1450
www.uspto.gov

MARGARET ANDERSON
106 E. 6TH STREET, SUITE 900
AUSTIN TX 78701

MAILED
MAR 16 2011
OFFICE OF PETITIONS

In re Application of	:	
Levien et al.	:	DECISION ON PETITION
Application No. 11/264,701	:	TO WITHDRAW
Filed: November 1, 2005	:	FROM RECORD
Attorney Docket No. QQ1-0072US	:	

This is a decision on the Request to Withdraw as attorney or agent of record under 37 C.F.R. § 1.36(b), filed January 26, 2011.

The request is **NOT APPROVED**.

The Office will only accept correspondence address changes to the most current address information provided for the assignee of the entire interest *who properly became of record under 37 CFR 3.71,* or, if no assignee of the entire interest has properly been made of record, the most current address information provided for the first named inventor. 37 CFR 3.71(c) states:

An assignee becomes of record either in a national patent application or a reexamination proceeding by filing a statement in compliance with § 3.73(b) that is signed by a party who is authorized to act on behalf of the assignee.

According to a review of current USPTO records petitioner has not requested the address be changed to a properly recorded assignee or the first listed inventor. The Customer Number 55922 is neither the first named inventor nor the assignee who properly became of record under 37 CFR 3.71 As such, all future communications from the Office will continue to be directed to the above-listed address until otherwise notified by applicant.

Further, the address given on the petition differs from the address of record. A courtesy copy of this decision is being mailed to the address given on the petition; however, the Office will mail all future correspondence solely to the address of record.

Currently, a Notice of Panel Decision from Pre-Appeal Brief Review was mailed March 15, 2011 in the above-identified application.

Telephone inquires concerning this decision should be directed to the undersigned at (571) 272-7751.

Joan Olszewski
Petitions Examiner
Office of Petitions

cc: LEE & HAYES, PLLC
601 W RIVERSIDE
SUITE 1400
SPOKANE, WA 99201

UNITED STATES PATENT AND TRADEMARK OFFICE

Commissioner for Patents
United States Patent and Trademark Office
P.O. Box 1450
Alexandria, VA 22313-1450
www.uspto.gov

SEED INTELLECTUAL PROPERTY LAW GROUP PLLC
701 FIFTH AVE
SUITE 5400
SEATTLE, WA 98104

MAILED
JUL 25 2011
OFFICE OF PETITIONS

In re Patent No. 7,229,995 :
Issue Date: June 12, 2007 :
Application No. 11/264,702 :
Filed: November 1, 2005 :
Attorney Docket No. 690068.581C1

NOTICE

This is a notice regarding your request for acceptance of a fee deficiency submission under 37 CFR 1.28. On September 1, 1998, the Court of Appeals for the Federal Circuit held that 37 CFR 1.28(c) is the sole provision governing the time for correction of the erroneous payment of the issue fee as a small entity. **See DH Technology v. Synergystex International, Inc. 154 F.3d 1333, 47 USPQ2d 1865 (Fed. Cir. Sept. 1, 1998).**

The Office no longer investigates or rejects original or reissue applications under 37 CFR 1.56. **1098 Off. Gaz. Pat. Office 502 (January 3, 1989)**. Therefore, nothing in this Notice is intended to imply that an investigation was done.

Your fee deficiency submission under 37 CFR 1.28 is hereby **ACCEPTED**.

Inquiries related to this communication should be directed to Irvin Dingle at (571) 272-3210.

Irvin Dingle
Petitions Examiner
Office of Petitions

UNITED STATES PATENT AND TRADEMARK OFFICE

Commissioner for Patents
United States Patent and Trademark Office
P.O. Box 1450
Alexandria, VA 22313-1450
www.uspto.gov

MAILED
MAY 23 2011
OFFICE OF PETITIONS

FISH & RICHARDSON P.C. (TC)
PO BOX 1022
MINNEAPOLIS MN 55440-1022

In re Patent No. 7,858,101	:
Issued: December 28, 2010	: DECISION ON PATENT TERM
Application No. 11/264,731	:
Filed: November 1, 2005	:
Atty. Dkt. No.: 10286-033001 / BWH 942; C	:

This is a decision on the application for patent term adjustment filed February 28, 2011 requesting that the patent term adjustment be increased from 227 days to 358 days.

The request for reconsideration of the patent term adjustment (PTA) pursuant to 37 CFR 1.705(d) is **DISMISSED**.

The above-identified application matured into U.S. Pat. No. 7,858,101 on December 28, 2010. The patent issued with a patent term adjustment of 227 days. The instant application for patent term adjustment was timely filed in accordance with 37 CFR 1.705(d). Patentee contests the period of adjustment of 376 days accorded pursuant to 37 CFR 1.702(b) and assert that the correct period of adjustment under 37 CFR 1.702(b) is 507 days.

Petitioner's arguments have been carefully considered, but are not persuasive. The period of adjustment pursuant to 37 CFR 1.702(b) was properly calculated at 376 days.

35 USC 154(b)(1)(B) states in relevant part:

> Subject to the limitations under paragraph (2), if the issue of an original patent is delayed due to the failure of the United States Patent and Trademark Office to issue a patent within 3 years after the actual filing date of the application in the United States, not including — (i) any time consumed by continued examination of the application requested by the applicant under section 132(b).

37 CFR 1.702(b) states in relevant part:

> Subject to the provisions of 35 U.S.C. 154(b) and this subpart, the term of an original patent shall be adjusted if the issuance of the patent was delayed due to the failure of the Office to issue a patent within three years after the date on which the application was filed under 35 U.S.C. 111(a) or the national stage commenced under 35 U.S.C. 371(b) or (f) in an international application, but not including: (1) Any time consumed by continued examination of the application under 35 U.S.C. 132(b).

37 CFR 1.703(b) states in relevant part:

> The period of adjustment under § 1.702(b) is the number of days, if any, in the period beginning on the day after the date that is three years after the date on which the application was filed under 35 U.S.C. 111(a) or the national stage commenced under 35 U.S.C. 371(b) or (f) in an international application and ending on the date a patent was issued, but not including the sum of the following periods: (1) The number of days, if any, in the period beginning on the date on which a request for continued examination of the application under 35 U.S.C. 132(b) was filed and ending on the date the patent was issued.

Accordingly, in the instant matter, and in compliance with the provisions of law and rules set forth above, the period of adjustment under § 1.702(b) is 376 days, the period from November 13, 2009, the date that the RCE was filed, to December 28, 2010, the date that the patent issued, being excluded from the period of adjustment under 37 CFR 1.702(b).

In view thereof, no adjustment to the patent term will be made.

Nothing in this decision shall be construed as a waiver of the requirement of 35 U.S.C. 154(b)(4) that any civil action by an applicant dissatisfied with a determination made by the Director under 35 U.S.C. 154(b)(3) be filed in the United States District Court for the District of Columbia within 180 days after the grant of the patent.

Telephone inquiries specific to this matter should be directed to the undersigned at (571) 272-3205.

/ALESIA M. BROWN/

Alesia M. Brown
Attorney Advisor
Office of Petitions

UNITED STATES PATENT AND TRADEMARK OFFICE

Commissioner for Patents
United States Patent and Trademark Office
P.O. Box 1450
Alexandria, VA 22313-1450
www.uspto.gov

Patent No. : 7676356B2
Serial No. : 11/264743
Inventor(s) : Ron Carmel et al.
Issued : March 9, 2010
Title : SYSTEM, METHOD AND DATA STRUCTURE FOR SIMULATED INTERACTION WITH GRAPHICAL OBJECTS
Docket No. : IMMR-VTI0011C (034701-602)

Re: Request for Certificate of Correction

Consideration has been given to your request for the issuance of a Certificate of Correction For the above-identified patent under the provisions of Rule(s) 1.322.

Respecting the alleged error in Column 19, line 52, 53, 54 in the specification, comparison of the printed patent with the corresponding location in the application file reveals that there is no discrepancy.

In view of the foregoing, your request, in this matter, is hereby denied.

A certificate of correction will be issued to correct the remaining errors noted in your request.

Tasneem Siddiqui
For Mary Diggs (Supervisor)
Decisions & Certificates
of Correction Branch
(703) 756-1593 or (703) 756-1814
Date: 8/20/10

Address: Carl E. Sanders
Kilpatrick Stockton LLP
1001 West Fourth Street
Winston-Salem, NC 27101

ts/md

UNITED STATES PATENT AND TRADEMARK OFFICE

Commissioner for Patents
United States Patent and Trademark Office
P.O. Box 1450
Alexandria, VA 22313-1450
www.uspto.gov

MILES & STOCKBRIDGE PC
1751 PINNACLE DRIVE
SUITE 500
MCLEAN, VA 22102-3833

MAILED

SEP 20 2010

OFFICE OF PETITIONS

In re Application of :
Bruce Hall :
Application No. 11/264,752 :
Filed: November 2, 2005 :
Attorney Docket No. T3572-908375US02

ON PETITION

This is a decision on the petition, filed September 20, 2010 under 37 CFR 1.313(c)(2) to withdraw the above-identified application from issue after payment of the issue fee.

The petition is **GRANTED**.

The above-identified application is withdrawn from issue for consideration of a submission under 37 CFR 1.114 (request for continued examination). See 37 CFR 1.313(c)(2).

Petitioner is advised that the issue fee paid on August 3, 2010 in the above-identified application cannot be refunded. If, however, the above-identified application is again allowed, petitioner may request that it be applied towards the issue fee required by the new Notice of Allowance.[1]

Telephone inquiries should be directed to Irvin Dingle at (571) 272-3210.

This matter is being referred to Technology Center AU 3641 for processing of the request for continued examination under 37 CFR 1.114 and for consideration of the concurrently filed Information Disclosure Statement.

/Irvin Dingle/
Irvin Dingle
Petitions Examiner
Office of Petitions

---

[1] The request to apply the issue fee to the new Notice may be satisfied by completing and returning the new Issue Fee Transmittal Form PTOL-85(b), which includes the following language thereon: Commissioner for Patents is requested to apply the Issue Fee and Publication Fee (if any) or re-apply any previously paid issue fee to the application identified above. Petitioner is advised that, whether a fee is indicated as being due or not, the Issue Fee Transmittal Form **must** be completed and timely submitted to avoid abandonment. Note the language in bold text on the first page of the Notice of Allowance and Fee(s) Due (PTOL-85).

SPE RESPONSE FOR CERTIFICATE OF CORRECTION

Paper No.:20111114

DATE : November 14, 2011

TO SPE OF : ART UNIT 3641

SUBJECT : Request for Certificate of Correction on Patent No.: 7,886,651

A response is requested with respect to the accompanying request for a certificate of correction.

Please complete this form and return with file, within **7** days to:
Certificates of Correction Branch - ST (South Tower) 9A22
Palm location **7590** - Tel. No. (703) 305-8309

With respect to the change(s) requested, correcting Office and/or Applicant's errors, should the patent read as shown in the certificate of correction? No new matter should be introduced, nor should the scope or meaning of the claims be changed.

Thank You For Your Assistance **Certificates of Correction Branch**

The request for issuing the above-identified correction(s) is hereby:

Note your decision on the appropriated box.

☐ **Approved** All changes apply.

☒ **Approved in Part** Specify below which changes **do not** apply.

☐ **Denied** State the reasons for denial below.

Comments:

All changes are approved with the following exceptions:

the addition of the following has NOT been apporved: 4,877,656, 6,298,766, 2005/0204696, 2008/0092731, WO 04/92495, since none of these were cited by the examiner or the applicant during prosecution.

/MICHAEL CARONE/
Supervisory Patent Examiner.Art Unit 3641

SPE RESPONSE FOR CERTIFICATE OF CORRECTION

DATE : 12/9/09 Paper No.: —

TO SPE OF : ART UNIT 1652

SUBJECT : Request for Certificate of Correction for Appl. No.: 11/264,784 Patent No.: 7588931 B2

Please respond to this request for a certificate of correction within 7 days.

FOR IFW FILES:

Please review the requested changes/corrections as shown in the **COCIN** document(s) in the IFW application image. No new matter should be introduced, nor should the scope or meaning of the claims be changed.

Please complete the response (see below) and forward the completed response to scanning using document code **COCX**.

FOR PAPER FILES:

Please review the requested changes/corrections as shown in the attached certificate of correction. Please complete this form (see below) and forward it with the file to:

Certificates of Correction Branch (CofC)
Randolph Square – 9D10-A
Palm Location 7580

Virginia Tolbert
Certificates of Correction Branch
571-272-0460

Thank You For Your Assistance

The request for issuing the above-identified correction(s) is hereby:
Note your decision on the appropriate box.

- ☒ **Approved** — All changes apply.
- ☐ **Approved in Part** — Specify below which changes **do not** apply.
- ☐ **Denied** — State the reasons for denial below.

Comments: _____

ROBERT MONDESI
SUPERVISORY PATENT EXAMINER

1652

SPE RESPONSE FOR CERTIFICATE OF CORRECTION

Paper No.: _____

DATE : 10/6/10

TO SPE OF : ART UNIT 2194 (2100)

SUBJECT : Request for Certificate of Correction for Appl. No.: 11/264,799 Patent No.: 7,730,452

Please respond to this request for a certificate of correction within 7 days.

FOR IFW FILES:

Please review the requested changes/corrections as shown in the **COCIN** document(s) in the IFW application image. No new matter should be introduced, nor should the scope or meaning of the claims be changed.

Please complete the response (see below) and forward the completed response to scanning using document code **COCX**.

FOR PAPER FILES:

Please review the requested changes/corrections as shown in the attached certificate of correction. Please complete this form (see below) and forward it with the file to:

Certificates of Correction Branch (CofC)
Randolph Square – 9D10-A
Palm Location 7580

Ernest C. White, LTE
Randolph Sq. Ste 9D62A
703-756-1590

Thank You For Your Assistance

The request for issuing the above-identified correction(s) is hereby:
Note your decision on the appropriate box.

- ☒ **Approved** — **All** changes apply.
- ☐ **Approved in Part** — Specify below which changes **do not** apply.
- ☐ **Denied** — State the reasons for denial below.

_____

_____

_____

SPE [signature] **ART UNIT** 2191

UNITED STATES PATENT AND TRADEMARK OFFICE

Commissioner for Patents
United States Patent and Trademark Office
P.O. Box 1450
Alexandria, VA 22313-1450
www.uspto.gov

BANNER & WITCOFF, LTD
AND ATTORNEYS FOR CLIENT NO. 011738
10 SOUTH WACKER DRIVE
SUITE 3000
CHICAGO, IL 60606

MAILED
MAY 13 2011
OFFICE OF PETITIONS

In re Application of	:	
Touby A. Drew	:	
Application No. 11/264,846	:	DECISION ON PETITION
Filed: March 17, 2006	:	TO WITHDRAW
Attorney Docket No. P0024285.00	:	FROM RECORD
	:	

This is a decision on the Request to Withdraw as attorney or agent of record under 37 C.F.R. § 1.36(b), filed April 4, 2011.

The request is **NOT APPROVED** because it is moot.

A review of the file record indicates that the power of attorney to Banner & Witcoff, LTD has been revoked by the assignee of the patent application on April 6, 2011. Accordingly, the request to withdraw under 37 C.F.R. § 1.36(b) is moot.

All future communications from the Office will continue to be directed to the below-listed address until otherwise notified by applicant.

Telephone inquires concerning this decision should be directed to Terri Johnson at 571-272-2991.

/Terri Johnson/
Terri Johnson
Petitions Examiner
Office of Petitions

cc: **MEDTRONIC, INC.**
710 MEDTRONIC PARKWAY NE
MS: LC340 LEGAL PATENTS
MINNEAPOLIS, MN 55432-9924

UNITED STATES PATENT AND TRADEMARK OFFICE

Commissioner for Patents
United States Patent and Trademark Office
P.O. Box 1450
Alexandria, VA 22313-1450
www.uspto.gov

BANNER & WITCOFF, LTD
AND ATTORNEYS FOR CLIENT NO. 011738
10 SOUTH WACKER DRIVE
SUITE 3000
CHICAGO, IL 60606

MAILED

MAY 13 2011

OFFICE OF PETITIONS

In re Application of	:	
Touby A. Drew	:	
Application No. 11/264,860	:	DECISION ON PETITION
Filed: November 2, 2005	:	TO WITHDRAW
Attorney Docket No. P0021535.00	:	FROM RECORD
	:	

This is a decision on the Request to Withdraw as attorney or agent of record under 37 C.F.R. § 1.36(b), filed April 4, 2011.

The request is **NOT APPROVED** because it is moot.

A review of the file record indicates that the power of attorney to Banner & Witcoff, LTD has been revoked by the assignee of the patent application on April 6, 2011. Accordingly, the request to withdraw under 37 C.F.R. § 1.36(b) is moot.

All future communications from the Office will continue to be directed to the below-listed address until otherwise notified by applicant.

Telephone inquires concerning this decision should be directed to Terri Johnson at 571-272-2991.

/Terri Johnson/
Terri Johnson
Petitions Examiner
Office of Petitions

cc: **MEDTRONIC, INC.**
710 MEDTRONIC PARKWAY NE
MS: LC340 LEGAL PATENTS
MINNEAPOLIS, MN 55432-9924

UNITED STATES PATENT AND TRADEMARK OFFICE

Commissioner for Patents
United States Patent and Trademark Office
P.O. Box 1450
Alexandria, VA 22313-1450
www.uspto.gov

Medtronic, Inc. (CRDM)
710 MEDTRONIC PARKWAY NE
MS: LC340 Legal Patents
MINNEAPOLIS MN 55432-9924

MAILED
MAR 26 2012
OFFICE OF PETITIONS

In re Application of

Drew :

Application No. 11/264,860

: DECISION ON PETITION

Filed: November 2, 2005

:

Attorney Docket No. **P0021535.00**

This is a decision on the petition under 37 CFR 1.137(b), filed February 27, 2012, to revive the above-identified application.

The petition is **GRANTED**.

The above-cited application became abandoned for failure to reply in a timely manner to the non-final Office action mailed, July 8, 2011, which set a shortened statutory period for reply of three (3) months from its mailing date. No extension of time pursuant to 37 CFR 1.136(a) was obtained within the allowable period. Accordingly, the application became abandoned on October 9, 2011. A Notice of Abandonment was mailed January 20, 2012.

The amendment filed February 27, 2012, is noted.

The application is being forwarded to Technology Center 3700, GAU 3762 for further processing.

Telephone inquiries concerning this decision should be directed to the undersigned at (571) 272-3222.

/Kenya A. McLaughlin/

Kenya A. McLaughlin
Petitions Attorney
Office of Petitions

UNITED STATES PATENT AND TRADEMARK OFFICE

Commissioner for Patents
United States Patent and Trademark Office
P.O. Box 1450
Alexandria, VA 22313-1450
www.uspto.gov

BANNER & WITCOFF, LTD
AND ATTORNEYS FOR CLIENT NUMBER 011738
10 SOUTH WACKER DRIVE
SUITE 3000
CHICAGO, IL 60606

MAILED
APR 21 2011
OFFICE OF PETITIONS

In re Application	:	
Touby A. Drew	:	DECISION ON PETITION
Application No. 11/264,887	:	TO WITHDRAW
Filed: November 2, 2005	:	FROM RECORD
Attorney Docket No. P0020919.01	:	

This is a decision on the Request to Withdraw as attorney or agent of record under 37 C.F.R. § 1.36(b), filed April 4, 2011.

The request is **DISMISSED** because it is moot.

A review of the file record indicates that Banner & Witcoff, LTD, was revoked as attorney of record on April 6, 2011, by the assignee of record. Accordingly, the request to withdraw under 37 C.F.R. § 1.36(b) is not applicable.

All future communications from the Office will continue to be directed to the below-listed address of record until otherwise notified by applicant.

Telephone inquires concerning this decision should be directed to the undersigned at (571) 272-6059. All other inquires concerning either the examination or status of the application should be directed to the Technology Center.

A. Kelley

Alicia Kelley
Petitions Examiner
Office of Petitions

cc: MEDTRONIC, INC.
710 MEDTRONIC PARKWAY NE
MS: LC340 LEGAL PATENTS
MINNEAPOLIS MN 55432-9924

UNITED STATES PATENT AND TRADEMARK OFFICE

Commissioner for Patents
United States Patent and Trademark Office
P.O. Box 1450
Alexandria, VA 22313-1450
www.uspto.gov

BANNER & WITCOFF, LTD
AND ATTORNEYS FOR CLIENT NUMBER 011738
10 SOUTH WACKER DRIVE
SUITE 3000
CHICAGO, IL 60606

MAILED
MAY 20 2011
OFFICE OF PETITIONS

In re Application of	:	
CHANG, et al	:	
Application No. 11/264,915	:	DECISION ON PETITION
Filed: November 5, 2008	:	TO WITHDRAW
Attorney Docket No. US17210	:	FROM RECORD
	:	

This is a decision on the Request to Withdraw as attorney or agent of record under 37 C.F.R. § 1.36(b), filed April 4, 2011.

The request is **NOT APPROVED** because it is moot.

A review of the file record indicates that the power of attorney to Robert H. Resis, has been revoked by the assignee of the patent application on April 6, 2011. Accordingly, the request to withdraw under 37 C.F.R. § 1.36(b) is moot.

Telephone inquires concerning this decision should be directed to undersigned at (571) 272-6735.

/Diane Goodwyn/
Diane Goodwyn
Petitions Examiner
Office of Petitions

SPE RESPONSE FOR CERTIFICATE OF CORRECTION

DATE : 6/03/11

TO SPE OF : ART UNIT 1731

SUBJECT : Request for Certificate of Correction for Appl. No.: 11264918 Patent No.: 7892299

CofC mailroom date: 5/20/11

Please respond to this request for a certificate of correction within 7 days.

FOR IFW FILES:

Please review the requested changes/corrections as shown in the **COCIN** document(s) in the IFW application image. No new matter should be introduced, nor should the scope or meaning of the claims be changed.

Please complete the response (see below) and forward the completed response to scanning using document code **COCX**.

FOR PAPER FILES:

Please review the requested changes/corrections as shown in the attached certificate of correction. Please complete this form (see below) and forward it with the file to:

Certificates of Correction Branch (CofC)
Randolph Square – 9D10-A
Palm Location 7580
[redacted]

Note:

Lamonte Newsome

Certificates of Correction Branch

571-272-3421

Thank You For Your Assistance

The request for issuing the above-identified correction(s) is hereby:
Note your decision on the appropriate box.

- ☒ **Approved** — **All** changes apply.
- ☐ **Approved in Part** — Specify below which changes **do not** apply.
- ☐ **Denied** — State the reasons for denial below.

SPE RESPONSE FOR CERTIFICATE OF CORRECTION

Comments: _____

/J.A. Lorengo/ 1731

SPE **Art Unit**

UNITED STATES PATENT AND TRADEMARK OFFICE

UNITED STATES DEPARTMENT OF COMMERCE
United States Patent and Trademark Office
Address: COMMISSIONER FOR PATENTS
P.O. Box 1450
Alexandria, Virginia 22313-1450
www.uspto.gov

APPLICATION NO.	FILING DATE	FIRST NAMED INVENTOR	ATTORNEY DOCKET NO.	CONFIRMATION NO.
11/264,974	11/02/2005	Touby A. Drew	011738.00275	5584

70467 7590 03/16/2011
BANNER & WITCOFF, LTD
AND ATTORNEYS FOR CLIENT NUMBER 011738
10 SOUTH WACKER DRIVE
SUITE 3000
CHICAGO, IL 60606

EXAMINER
STICE, PAULA J

ART UNIT	PAPER NUMBER
3766	

MAIL DATE	DELIVERY MODE
03/16/2011	PAPER

Please find below and/or attached an Office communication concerning this application or proceeding.

The time period for reply, if any, is set in the attached communication.

UNITED STATES DEPARTMENT OF COMMERCE
U.S. Patent and Trademark Office
Address: COMMISSIONER FOR PATENTS
P.O. Box 1450
Alexandria, Virginia 22313-1450

APPLICATION NO./ CONTROL NO.	FILING DATE	FIRST NAMED INVENTOR / PATENT IN REEXAMINATION	ATTORNEY DOCKET NO.
11264974	11/2/05	DREW, TOUBY A.	011738.00275

EXAMINER
CARL H.. LAYNO

ART UNIT	PAPER
3766	20110301-A

DATE MAILED:

BANNER & WITCOFF, LTD
AND ATTORNEYS FOR CLIENT NUMBER 011738
10 SOUTH WACKER DRIVE
SUITE 3000
CHICAGO, IL 60606

Please find below and/or attached an Office communication concerning this application or proceeding.

Commissioner for Patents

See attached Decision on the Correction of Inventorship Request submitted under rule 37 CFR 1.48(a).

/Carl H. Layno/
Supervisory Patent Examiner, Art Unit 3766

Correction of Inventorship Request under 37 CFR 1.48(a)

Decision on Inventorship Change

1. In view of the papers filed 4/20/2006, it has been found that this nonprovisional application, as filed, through error and without deceptive intent, improperly set forth the inventorship, and accordingly, this application has been corrected in compliance with 37 CFR 1.48(a). The inventorship of this application has been changed by the addition of co-inventors Jonathon E. Giftakis, David L. Carlson, Eric J. Panken, Jonathan C. Werder, and Nina M. Graves.

The application will be forwarded to the Office of Initial Patent Examination (OIPE) for issuance of a corrected filing receipt, and correction of Office records to reflect the inventorship as corrected.

/Carl H. Layno/

Supervisory Patent Examiner, Art Unit 3766

UNITED STATES PATENT AND TRADEMARK OFFICE

Commissioner for Patents
United States Patent and Trademark Office
P.O. Box 1450
Alexandria, VA 22313-1450
www.uspto.gov

Medtronic, Inc. (CRDM)
710 MEDTRONIC PARKWAY NE
MS: LC340 Legal Patents
MINNEAPOLIS, MN 55432-9924

MAILED

MAY 11 2011

OFFICE OF PETITIONS

In re Application of	:	
Touby A. Drew	:	
Application No. 11/264,974	:	DECISION ON PETITION
Filed: November 2, 2005	:	TO WITHDRAW FROM
Attorney Docket No. P0024281.00	:	RECORD

This is a decision on the renewed Request to Withdraw as attorney or agent of record under 37 CFR §§ 1.36(b) or 10.40, filed April 4, 2011.

The request is **MOOT**.

A review of the file record indicates that any previous power of attorney was revoked by the assignee of the above application on April 6, 2011. Accordingly, the request to withdraw under 37 CFR §§ 1.36(b) or 10.40 is unnecessary.

There is an Office action mailed March 22, 2011, that requires a reply from the applicant.

All future communications from the Office will continue to be directed to the above-listed address until otherwise notified by applicant.

Telephone inquires concerning this decision should be directed to the undersigned at (571) 272-3226.

Andrea Smith
Petitions Examiner
Office of Petitions

cc: Banner & Witcoff, LTD.
and Attorneys for Client Number 011738
10 South Wacker Drive
Suite 3000
Chicago, IL 60606

UNITED STATES PATENT AND TRADEMARK OFFICE

Commissioner for Patents
United States Patent and Trademark Office
P.O. Box 1450
Alexandria, VA 22313-1450
www.uspto.gov

Medtronic, Inc. (CRDM)
710 MEDTRONIC PARKWAY NE
MS: LC340 Legal Patents
MINNEAPOLIS, MN 55432-9924

MAILED

MAY 11 2011

OFFICE OF PETITIONS

In re Application of	:	
Touby A. Drew	:	
Application No. 11/265,045	:	DECISION ON PETITION
Filed: November 2, 2005	:	TO WITHDRAW FROM
Attorney Docket No. P0021113.00	:	RECORD

This is a decision on the renewed Request to Withdraw as attorney or agent of record under 37 CFR §§ 1.36(b) or 10.40, filed April 4, 2011.

The request is **MOOT**.

A review of the file record indicates that any previous power of attorney was revoked by the assignee of the above application on April 6, 2011. Accordingly, the request to withdraw under 37 CFR §§ 1.36(b) or 10.40 is unnecessary.

All future communications from the Office will continue to be directed to the above-listed address until otherwise notified by applicant.

Telephone inquires concerning this decision should be directed to the undersigned at (571) 272-3226.

Andrea Smith
Petitions Examiner
Office of Petitions

cc: Banner & Witcoff, LTD.
and Attorneys for Client Number 011738
10 South Wacker Drive
Suite 3000
Chicago, IL 60606

UNITED STATES PATENT AND TRADEMARK OFFICE

Commissioner for Patents
United States Patent and Trademark Office
P.O. Box 1450
Alexandria, VA 22313-1450
www.uspto.gov

MAILED
APR 15 2011
OFFICE OF PETITIONS

COOLEY LLP
ATTN: PATENT GROUP
SUITE 1100
777 – 6TH STREET, NW
WASHINGTON DC 20001

In re Application of	:	
BAIN, et al	:	
Application No. 11/265,091	:	DECISION ON PETITION
Filed: November 3, 2005	:	
Attorney Docket No. BUMP-002/02US 31338-2003	:	

This is a decision on the petition under the unintentional provisions of 37 CFR 1.137(b), filed February 17, 2011, to revive the above-identified application.

The petition is **GRANTED**.

This application became abandoned as a result of petitioner's failure to file a complete and proper reply to the Office communication mailed, August 28, 2008, which set a period for reply of one (1) month. No extensions of time under the provisions of 37 CFR 1.136(a) were obtained. Accordingly, the application became abandoned on September 29, 2008.

The petition satisfies the requirements of 37 CFR 1.137(b) in that petitioner has supplied (1) a reply in the form of an amendment and election (2) the petition fee of $810; and (3) the required statement of unintentional delay.

Telephone inquiries concerning this decision should be directed to the undersigned at (571) 272-6735.

This application is being referred to Technology Center 2453 for appropriate action by the Examiner in the normal course of business.

/Diane C. Goodwyn/
Diane C. Goodwyn
Petitions Examiner
Office of Petitions

UNITED STATES PATENT AND TRADEMARK OFFICE

UNITED STATES DEPARTMENT OF COMMERCE
United States Patent and Trademark Office
Address: COMMISSIONER FOR PATENTS
P.O. Box 1450
Alexandria, Virginia 22313-1450
www.uspto.gov

APPLICATION NO.	FILING DATE	FIRST NAMED INVENTOR	ATTORNEY DOCKET NO.	CONFIRMATION NO.
11/265,388	11/01/2005	Richard Noddin	S63.2-11899-US01	6992

490 7590 03/20/2012
VIDAS, ARRETT & STEINKRAUS, P.A.
Richard A. Arrett
SUITE 400, 6640 SHADY OAK ROAD
6640 Shady Oak Rd.
EDEN PRAIRIE, MN 55344

EXAMINER
PRICE, NATHAN R

ART UNIT	PAPER NUMBER
3763	

NOTIFICATION DATE	DELIVERY MODE
03/20/2012	ELECTRONIC

Please find below and/or attached an Office communication concerning this application or proceeding.

The time period for reply, if any, is set in the attached communication.

Notice of the Office communication was sent electronically on above-indicated "Notification Date" to the following e-mail address(es):

mail@vaslaw.com
rleaf@vaslaw.com
rarrett@vaslaw.com

UNITED STATES PATENT AND TRADEMARK OFFICE

Commissioner for Patents
United States Patent and Trademark Office
P.O. Box 1450
Alexandria, VA 22313-1450
www.uspto.gov

VIDAS, ARRETT & STEINKRAUS, P.A.
Richard A. Arrett
SUITE 400, 6640 SHADY OAK ROAD
6640 Shady Oak Rd.
EDEN PRAIRIE MN 55344

In re Application of:
NODDIN, RICHARD
Serial No.: 11/265,388
Filed: Nov. 1, 2005
Docket: S63.2-11899-US01
Title: COMPOSITE BALLOON

DECISION ON PETITION

This is a decision on the petition filed on Nov. 9, 2009 to restart the Period for Response for the Office action mailed on September 9, 2009. The petition is being considered pursuant to 37 CFR 1.181. No fee is required. The delay of this decision on petition is regretted.

The petition is **DISMISSED as moot**.

Pertinent to this petition, the record shows the following:

1) On September 9, 2009, a non-final Office Action was mailed to the applicant.
2) On November 9, 2009, a petition was filed to restart the Period for Response because delayed receipt of the September 9, 2009 Office Action presumably due to the U.S. Postal Office delay.
3) On November 9, 2009, the applicant filed a full response to the Non-final Office Action of September 9, 2009, including a proper Extension of Time, making the response to the September 9, 2009 Non-final Office Action timely.

In view of the prosecution history, the relief the applicant request, namely the restarting of the Period for Response, is no longer needed. This application was never abandoned and a proper, timely, response was submitted, responsive to the Non-final Office Action of September 9, 2009. The latest RCE filed on March 28, 2011 is now pending before the examiner, and the petitioner's request for relief is moot.

Any inquiry regarding this decision should be directed to Henry Yuen, Special Programs Examiner, at (571) 272-4856.

PETITION DISMISSED as moot.

for

Donald T. Hajec, Director
Technology Center 3700

SPE RESPONSE FOR CERTIFICATE OF CORRECTION

Paper No.:20100813

DATE : August 13, 2010

TO SPE OF : ART UNIT 3724

SUBJECT : Request for Certificate of Correction on Patent No.: 7596928

A response is requested with respect to the accompanying request for a certificate of correction.

Please complete this form and return with file, within **7** days to:
Certificates of Correction Branch - ST (South Tower) 9A22
Palm location **7590** - Tel. No. (703) 305-8309

With respect to the change(s) requested, correcting Office and/or Applicant's errors, should the patent read as shown in the certificate of correction? No new matter should be introduced, nor should the scope or meaning of the claims be changed.

Thank You For Your Assistance **Certificates of Correction Branch**

The request for issuing the above-identified correction(s) is hereby:

Note your decision on the appropriated box.

☒ **Approved** All changes apply.

☐ **Approved in Part** Specify below which changes **do not** apply.

☐ **Denied** State the reasons for denial below.

Comments:

/BOYER D ASHLEY/
Supervisory Patent Examiner.Art Unit 3724

UNITED STATES PATENT AND TRADEMARK OFFICE

Commissioner for Patents
United States Patent and Trademark Office
P.O. Box 1450
Alexandria, VA 22313-1450
www.uspto.gov

GREENBERG TRAURIG, LLP (CHI)
77 WEST WACKER DRIVE
SUITE 3100
CHICAGO IL 60601-1732

MAILED

JUN 06 2011

OFFICE OF PETITIONS

In re Application of

HIEW, Fen. et al.
Application No. 11/265,485
Filed: November 02, 2005
Attorney Docket No. **14428.01US4**

DECISION ON PETITION
TO WITHDRAW
FROM RECORD

This is a decision on the Request to Withdraw as attorney or agent of record under 37 C.F.R. § 1.36(b), filed May 27, 2011.

The request is **NOT APPROVED**.

The Office has revised its change in procedure for request to withdraw from representation applies to requests filed on or after May 12, 2008.

The Office will no longer accept address changes to a new practitioner or law firm filed with a Request, absent the filing of a power of attorney to the new representative. The Office will either change the correspondence address of record to the most current address information provided for the assignee of the entire interest who properly became of record under 37 CFR 3.71 or, if no assignee of the entire interest has properly been made of record under 37 CFR 3.71, the most current address information provided for the first named inventor.

Accordingly, the request to withdraw from record cannot be approved because the request to change the correspondence address is not that of: (1) the first named inventor; or (2) an assignee of the entire interest under 37 C.F.R 3.71 who has properly intervened.

If an assignee has intervened in this application, then a Statement under 37 CFR 3.73(b) or a copy of the actual assignment must be submitted with a renewed request.

All future communications from the Office will continue to be directed to the above-listed address until otherwise notified by applicant.

Telephone inquiries concerning this decision should be directed to Tredelle Jackson at 571-272- 2783.

/Tredelle D. Jackson/
Paralegal Specialist
Office of Petitions

cc: **COMPLEMENTSOFT**
544 GREENWOOD RD.
NORTHBROOK IL 60062

UNITED STATES PATENT AND TRADEMARK OFFICE

Commissioner for Patents
United States Patent and Trademark Office
P.O. Box 1450
Alexandria, VA 22313-1450
www.uspto.gov

GREENBERG TRAURIG, LLP (CHI)
77 WEST WACKER DRIVE
SUITE 3100
CHICAGO IL 60601-1732

MAILED

JUL 05 2011

OFFICE OF PETITIONS

In re Application of	:	
HIEW, Fen et al.	:	
Application No. 11/265,485	:	DECISION ON PETITION
Filed: November 02, 2005	:	TO WITHDRAW
Attorney Docket No. 14428.01US4	:	FROM RECORD

This is a decision on the Request to Withdraw as attorney or agent of record under 37 C.F.R. § 1.36(b), filed June 15, 2011.

The request is **APPROVED**.

A grantable request to withdraw as attorney/agent of record must be signed by every attorney/agent seeking to withdraw or contain a clear indication that one attorney is signing on behalf of another/others. The Office requires the practitioner(s) requesting withdrawal to certify that he, she, or they have: (1) given reasonable notice to the client, prior to the expiration of the response period, that the practitioner(s) intends to withdraw from employment; (2) delivered to the client or a duly authorized representative of the client all papers and property (including funds) to which the client is entitled; and (3) notified the client of any responses that may be due and the time frame within which the client must respond, pursuant 37 CFR 10.40(c).

The request was signed by Gary R. Jarosik on behalf of all attorneys of record who are associated with customer No. 34018. All attorneys/agents associated with the Customer Number 34018 have been withdrawn. Applicant is reminded that there is no attorney of record at this time.

All future correspondence will be directed to the first named inventor Fen Hiew at the address indicated below. There is an outstanding Office action mailed April 04, 2011 that requires a reply from the applicant.

Telephone inquiries concerning this decision should be directed to Tredelle Jackson at 571-272-2783.

/Tredelle D. Jackson/
Paralegal Specialist
Office of Petitions

cc: **FEN HIEW**
2525 ARBOR COURT
MENDOTA HEIGHTS MN 55120

UNITED STATES PATENT AND TRADEMARK OFFICE

Commissioner for Patents
United States Patent and Trademark Office
P.O. Box 1450
Alexandria, VA 22313-1450
www.uspto.gov

FORTKORT & HOUSTON P.C.
9442 N. CAPITAL OF TEXAS HIGHWAY
ARBORETUM PLAZA ONE, SUITE 500
AUSTIN, TX 78759

MAILED
DEC 15 2010
OFFICE OF PETITIONS

In re Application of
Raghavendran Mahalingam et al
Application No. 11/265,778
Filed: November 2, 2005
Attorney Docket No. INFL003US0

ON PETITION

This is a decision on the petition under the unintentional provisions of 37 CFR 1.137(b), filed November 18, 2010, to revive the above-identified application.

The petition is **GRANTED.**

The application became abandoned for failure to timely file a reply within the meaning of 37 CFR 1.113 to the final Office action of March 8, 2010. The proposed reply required for consideration of a petition to revive must be a Notice of Appeal (and appeal fee required by 37 CFR 41.20(b)(2), an amendment that prima facie places the application in condition for allowance, a Request for Continued Examination and submission (37 CFR 1.114), or the filing of a continuing application under 37 CFR 1.53(b). See MPEP 711.03(c)(III)(A)(2). Three month (3) extension of time pursuant to the provisions of 37 CFR 1.136(a) was obtained. Accordingly, the date of abandonment of this application is September 9, 2010.

The petition satisfies the requirements of 37 CFR 1.137(b) in that petitioner has supplied (1) the reply in the form of a Request for Continued Examination (RCE) and fee of $405 the submission required by 37 CFR 1.114; (2) the petition fee of $810 and (3) a proper statement of unintentional delay.

Telephone inquiries concerning this decision should be directed to the undersigned at (571) 272-3210.

This application is being referred to Technology Center AU 2814 for processing of the RCE and for appropriate action by the Examiner in the normal course of business on the amendment filed September 8, 2010 submitted in accordance with 37 CFR 1.114.

Irvin Dingle
Petition Examiner
Office of Petitions

UNITED STATES PATENT AND TRADEMARK OFFICE

Commissioner for Patents
United States Patent and Trademark Office
P.O. Box 1450
Alexandria, VA 22313-1450
www.uspto.gov

STEPTOE & JOHNSON, LLP
2121 AVENUE OF THE STARS
SUITE 2800
LOS ANGELES CA 90067

MAILED

FEB 15 2011

OFFICE OF PETITIONS

In re Application of
Schultz, et al.
Application No. 11/265,793
Filed: 11 May, 2010
Attorney Docket No. 83336.1235

DECISION ON PETITION

This is a decision on the petition filed on 16 May, 2006, under 37 C.F.R. §1.47.

NOTE:

The Office of Petitions notes that the instant matter was not forwarded to it for determination until this writing. Further, Petitioner appears to have ignored the fact that this matter was not forwarded to the Office of Petitions to be addressed prior to substantive examination pursuant to the guidance in the Commentary at MPEP §409.03, et seq., and the record is silent as to even a single Status Inquiry across nearly seventy (70) months.

More problematic is that Petitioner on deposit of the petition in May 2006 made no showing as a diligent search to ascertain a reasonably believed to be valid/current/last known address when the February 2006 transmittal to the non-signing inventor indicated that no delivery had been made because "RECIPIENT MOVED"—*see*: 15 May, 2006, Declaration of Monica J. Finta, averred Assistant General Counsel of Assignee, pages 2-3, item 9).

The petition as considered under 37 C.F.R. §1.47(a) is **DISMISSED**.

Rule 47 applicant is given TWO (2) MONTHS from the mailing date of this decision to reply, correcting the below-noted deficiencies. Any reply should be entitled "Request for Reconsideration of Petition Pursuant to 37 C.F.R. §1.47(a)," and should only address the deficiencies noted below, except that the reply may include an oath or declaration executed by

the non-signing inventor. **FAILURE TO RESPOND WILL RESULT IN ABANDONMENT OF THE APPLICATION.** Any extensions of time will be governed by 37 C.F.R. §1.136(a).

This is **not** a final agency action within the meaning of 5 U.S.C. §704.

A grantable petition pursuant to 37 C.F.R. §1.47(a) requires: (1) petition and fee; (2) proof that the non-signing inventor cannot be reached or refuses to sign the oath or declaration after having been presented with the application papers (specification: description, claims and drawings); (3) an acceptable oath or declaration in compliance with 35 U.S.C. §§ 115 and 116; and (4) a statement of the last known address of the non-signing inventor(s)—with diligence in the effort to ascertain the validity of the address set forth as the reasonably believed to be last known/current/valid address.

Petitioner does not seem to have worked through the requirements of the petition, as set forth above, in satisfaction of those requirements. (*See, generally:* MPEP §409.03, and §409.03(a)—the applicable statute (35 U.S.C.§ 116).

In particular, Petitioner has not as of this writing satisfied the requirement(s) of the petition as listed above and discussed below.

Petitioners always are reminded that for transmission by Email of any document to be accepted by the Office, written acknowledgment of receipt and readability of the message and all applicable attachments of required materials must be provided.

BACKGROUND

The record reflects as follows:

The application was deposited on 4 October, 2005, without, *inter alia*, a fully executed oath/declaration

On 18 January, 2006, the Office mailed a Notice of Missing Parts requiring, *inter alia*, a fully executed oath/declaration.

On 16 May, 2006, Petitioner Vanessa J. Owen (Reg. No. 44,274) filed, *inter alia*, a request and fee for extension of time, a petition pursuant to the regulations at 37 C.F.R. §1.47, with an oath/declaration executed by co-inventor Schultz, Daly, Cohn, Rommerdahl, Lasalvia, Garofalo and Hammond for themselves and on behalf of non-signing co-inventor Jack A. Martin (Mr. Martin), with absolutely no showing by Petitioner of any diligence in any effort to ascertain a valid/current/reasonably believed to be last known address for Mr. Martin after a package was returned designated "RECIPIENT MOVED"—*see*: 15 May, 2006, Declaration of Monica J. Finta, averred Assistant General Counsel of Assignee, pages 2-3, item 9). Thus there was no

showing that the entire application—description, claims, abstract and drawing—was transmitted to valid/current/reasonably believed to be last known address for Mr. Martin as required.

Petitioners always are reminded:

- *for transmission by Email of any document to be accepted by the Office, written acknowledgment of receipt and readability of the message and all applicable attachments of required materials must be provided; and*

- *of the duties of candor to—with requirement for diligent inquiry before—the Office and to satisfy the Rules of Practice and the guidance in the Commentary at MPEP §409.03, and §409.03(a), et seq.*

Out of an abundance of caution, Petitioner should step through the requirements of a grantable petition under 37 C.F.R. §1.47(a) (i.e., (1) petition and fee; (2) proof that the non-signing inventor cannot be reached or refuses to sign the oath or declaration after having been presented with the application papers (specification: description, claims and drawings); (3) an acceptable oath or declaration in compliance with 35 U.S.C. §§ 115 and 116; and (4) a statement of the last known address of the non-signing inventor(s)—with diligence in the effort to ascertain the validity of the address set forth as the reasonably believed to be last known/current/valid address) and satisfy himself that he has complied with these requirements on submission of any renewed petition. (*See also*: the guidance in the Commentary at MPEP §409.03, and §409.03(a), et seq.).

Again, Petitioner has not worked through the requirements of the petition.

Thus, the present incompleteness of the record makes granting of the instant petition inappropriate.

The availability of applications and application papers online to applicants/practitioners who diligently associate their Customer Number with the respective application(s) now provides an applicant/practitioner on-demand information as to events/transactions in an application. Thus, now if one wishes to know the progress in and/or status of an application or the accuracy of the data therein, one need only look at the file online.

Out of an abundance of caution, Petitioners always are reminded that those registered to practice *and* all others who make representations before the Office must inquire into the underlying facts of representations made to the Office and support averments with the appropriate documentation–since all owe to the Office the continuing duty to disclose.[1]

---

[1] See supplement of 17 June, 1999. The Patent and Trademark Office is relying on petitioner's duty of candor and good faith and accepting a statement made by Petitioner. See Changes to Patent Practice and Procedure, 62 Fed. Reg. at 53160 and 53178, 1203 Off. Gaz. Pat. Office at 88 and 103 (responses to comments 64 and 109)(applicant obligated under 37 C.F.R. §10.18 to inquire into the underlying facts and circumstances when providing statements to the Patent and Trademark Office). See specifically, the regulations at 37 C.F.R. §10.18.

Application No. 11/265,793

The instant petition under 37 C.F.R. §1.47(a) is **dismissed**.

Further correspondence with respect to this matter should be addressed as follows:

By mail: Mail Stop PETITIONS
Commissioner for Patents
Post Office Box 1450
Alexandria, VA 22313-1450

By hand: Customer Service Window
Mail Stop Petitions
Randolph Building
401 Dulany Street
Alexandria, VA 22314

By FAX: (571) 273-8300
ATTN: Office of Petitions

While telephone inquiries regarding this decision may be directed to the undersigned at (571) 272-3214—it is noted, however, that all practice before the Office is in writing (see: 37 C.F.R. §1.2[2]) and the proper authority for action on any matter in this regard are the statutes (35 U.S.C.), regulations (37 C.F.R.) and the commentary on policy (MPEP). Therefore, no telephone discussion may be controlling or considered authority for Petitioner's action(s).

/John J. Gillon, Jr./
John J. Gillon, Jr.
Senior Attorney
Office of Petitions

[2] The regulations at 37 C.F.R. §1.2 provide:
§1.2 Business to be transacted in writing.
All business with the Patent and Trademark Office should be transacted in writing. The personal attendance of applicants or their attorneys or agents at the Patent and Trademark Office is unnecessary. The action of the Patent and Trademark Office will be based exclusively on the written record in the Office. No attention will be paid to any alleged oral promise, stipulation, or understanding in relation to which there is disagreement or doubt.

UNITED STATES PATENT AND TRADEMARK OFFICE

Commissioner for Patents
United States Patent and Trademark Office
P.O. Box 1450
Alexandria, VA 22313-1450
www.uspto.gov

STEPTOE & JOHNSON, LLP
2121 AVENUE OF THE STARS
SUITE 2800
LOS ANGELES CA 90067

MAILED

JUN 16 2011

OFFICE OF PETITIONS

In re Application of
Schultz, et al.
Application No. 11/265,793
Filed: 11 May, 2010
Attorney Docket No. 83336.1235

DECISION ON PETITION

This is a decision on the petition filed on 19 May, 2011, pursuant to 37 C.F.R. §1.47.

The petition as considered under 37 C.F.R. §1.47(a) is **DISMISSED**.

A grantable petition pursuant to 37 C.F.R. §1.47(a) requires: (1) petition and fee; (2) proof that the non-signing inventor cannot be reached or refuses to sign the oath or declaration after having been presented with the application papers (specification: description, claims and drawings); (3) an acceptable oath or declaration in compliance with 35 U.S.C. §§ 115 and 116; and (4) a statement of the last known address of the non-signing inventor(s)—with diligence in the effort to ascertain the validity of the address set forth as the reasonably believed to be last known/current/valid address.

Petitioners always are reminded that for transmission by Email of any document to be accepted by the Office, written acknowledgment of receipt and readability of the message and all applicable attachments of required materials must be provided.

BACKGROUND

The record reflects as follows:

The application was deposited on 4 October, 2005, without, *inter alia*, a fully executed oath/declaration

On 18 January, 2006, the Office mailed a Notice of Missing Parts requiring, *inter alia*, a fully executed oath/declaration.

On 16 May, 2006, Petitioner Vanessa J. Owen (Reg. No. 44,274) filed, *inter alia*, a request and fee for extension of time, a petition pursuant to the regulations at 37 C.F.R. §1.47, with an oath/declaration executed by co-inventor Schultz, Daly, Cohn, Rommerdahl, Lasalvia, Garofalo and Hammond for themselves and on behalf of non-signing co-inventor Jack A. Martin (Mr. Martin), with absolutely no showing by Petitioner of any diligence in any effort to ascertain a valid/current/reasonably believed to be last known address for Mr. Martin after a package was returned designated "RECIPIENT MOVED"—*see*: 15 May, 2006, Declaration of Monica J. Finta, averred Assistant General Counsel of Assignee, pages 2-3, item 9). Thus there was no showing that the entire application—description, claims, abstract and drawing—was transmitted to valid/current/reasonably believed to be last known address for Mr. Martin as required.. (It was noted in the decision of 15 February, 2011, that the petition matter was not forwarded to the Office of Petitions for determination until that date. Further, Petitioner appeared to have ignored the fact that this matter was not forwarded to the Office of Petitions to be addressed prior to substantive examination pursuant to the guidance in the Commentary at MPEP §409.03, et seq., and the record is silent as to even a single Status Inquiry across nearly seventy (70) months.) The petition was dismissed on 15 February, 2011.

On 18 May, 2011, Petitioner Douglas Peterson (Reg. No. 53,458) re-advanced the petition, and averred that consistent with the guidance in the Commentary at MPEP §409.03, and §409.03(a) et seq., he made a new search, located an address and sent the application to the non-signing inventor, who executed the oath/declaration and so joined in the application, and in support of the averment, Petitioner submitted a copy of the executed oath/declaration in compliance with 37 C.F.R. §1.63—and so evidencing his joinder.

The availability of applications and application papers online to applicants/practitioners who diligently associate their Customer Number with the respective application(s) now provides an applicant/practitioner on-demand information as to events/transactions in an application. Thus, now if one wishes to know the progress in and/or status of an application or the accuracy of the data therein, one need only look at the file online.

Out of an abundance of caution, Petitioners always are reminded that those registered to practice *and* all others who make representations before the Office must inquire into the underlying facts of representations made to the Office and support averments with the appropriate documentation–since all owe to the Office the continuing duty to disclose.[1]

CONCLUSION

The instant petition under 37 C.F.R. §1.47 is **dismissed as moot for joinder**.

---

[1] See supplement of 17 June, 1999. The Patent and Trademark Office is relying on petitioner's duty of candor and good faith and accepting a statement made by Petitioner. See Changes to Patent Practice and Procedure, 62 Fed. Reg. at 53160 and 53178, 1203 Off. Gaz. Pat. Office at 88 and 103 (responses to comments 64 and 109)(applicant obligated under 37 C.F.R. §10.18 to inquire into the underlying facts and circumstances when providing statements to the Patent and Trademark Office). See specifically, the regulations at 37 C.F.R. §10.18.

In view of the joinder of the inventor, further consideration under 37 C.F.R. §1.47 is not necessary. This application does not have any Rule 1.47 status and no such status should appear on the record for this file. This application should not be returned to this Office for any further consideration under 37 C.F.R. §1.47.

The instant application is released to the Office of Patent Application Processing (OPAP) for further processing in due course.

While telephone inquiries regarding this decision may be directed to the undersigned at (571) 272-3214—it is noted, however, that all practice before the Office is in writing (see: 37 C.F.R. §1.2[2]) and the proper authority for action on any matter in this regard are the statutes (35 U.S.C.), regulations (37 C.F.R.) and the commentary on policy (MPEP). Therefore, no telephone discussion may be controlling or considered authority for Petitioner's action(s).

/John J. Gillon, Jr./
John J. Gillon, Jr.
Senior Attorney
Office of Petitions

[2] The regulations at 37 C.F.R. §1.2 provide:

§1.2 Business to be transacted in writing.
All business with the Patent and Trademark Office should be transacted in writing. The personal attendance of applicants or their attorneys or agents at the Patent and Trademark Office is unnecessary. The action of the Patent and Trademark Office will be based exclusively on the written record in the Office. No attention will be paid to any alleged oral promise, stipulation, or understanding in relation to which there is disagreement or doubt.

UNITED STATES PATENT AND TRADEMARK OFFICE

Commissioner for Patents
United States Patent and Trademark Office
P.O. Box 1450
Alexandria, VA 22313-1450
www.uspto.gov

Leviton Manufacturing Company Incorporated (CDFS)
c/o Carter, DeLuca, Farrell & Schmidt, LLP
445 Broad Hollow Rd. Ste. 420
Melville, NY 11747

MAILED
JAN 05 2011
OFFICE OF PETITIONS

In re Application of Porter et al. :
Application No. 11/265,803 :
Filing Date: November 2, 2005 :
Attorney Docket No. 1415CIP3CON4CIP :

Decision Dismissing Petitions Under 37 CFR §§ 1.78(a)(3) and 1.78(a)(6)

This is a decision on the petitions under 37 CFR §§ 1.78(a)(3) and 1.78(a)(6), filed August 19, 2010, to accept an unintentionally delayed claim under 35 U.S.C. §§ 120 and 119(e) for the benefit of priority to the prior-filed applications set forth in the concurrently filed amendment.

The petitions are **GRANTED.**

A petition for acceptance of a claim for late priority under 37 CFR §§ 1.78(a)(3) and 1.78(a)(6) is only applicable to applications filed on or after November 29, 2000. Further, the petition is appropriate only after the expiration of the period specified in 37 CFR §§ 1.78(a)(2)(ii) and 1.78(a)(5)(ii). In addition, the petition under 37 CFR §§ 1.78(a)(3) and 1.78(a)(6) must be accompanied by:

(1) The reference required by 35 U.S.C. §§ 120 and 119(e) and 37 CFR §§ 1.78(a)(2)(i) and 1.78(a)(5)(i) of the prior-filed application, unless previously submitted;
(2) The surcharge set forth in § 1.17(t); and
(3) A statement that the entire delay between the date the claim was due under 37 CFR §§ 1.78(a)(2)(ii) and 1.78(a)(5)(ii) and the date the claim was filed was unintentional. The Director may require additional where there is a question whether the delay was unintentional.

In addition to the requirements above, any nonprovisional application(s) claiming the benefit of the prior-filed provisional application(s) must have been filed within twelve months of the filing date of the prior-filed provisional application(s).

All of the above requirements are satisfied in this case. Therefore, the late claim for benefit of priority to the prior-filed applications under 35 U.S.C. §§ 120 and 119(e) is accepted as being unintentionally delayed.

The granting of the petition to accept the delayed benefit claim to the prior-filed applications under 37 CFR §§ 1.78(a)(3) and 1.78(a)(6) should not be construed as meaning that this application is entitled to the benefit of the filing date of the prior-filed applications. In order for this application to be entitled to the benefit of the prior-filed applications, all other requirements under 35 U.S.C. §§ 120 and 1.78(a)(1) and (a)(2) and under 35 U.S.C. § 119(e) and 37 CFR 1.78(a)(4) and (a)(5) must be met. Similarly, the fact that the corrected Filing Receipt accompanying this decision on petition includes the prior-filed applications should not be construed as meaning that applicant is entitled to the claim for benefit of priority to the prior-filed applications noted thereon. Accordingly, the examiner will, in due course, consider this benefit claim and determine whether the application is entitled to the benefit of the earlier filing date.

A corrected Filing Receipt, which includes the priority claim to the prior-filed applications, accompanies this decision on petition.

The application is being forwarded to Technology Center Art Unit 2832 for consideration by the examiner of the claims of priority under 35 U.S.C. § 120 to the prior-filed applications and the claims under 35 U.S.C. § 119(e) for the benefit of priority to the prior-filed provisional applications.

Any inquiries concerning this decision may be directed to Senior Petitions Attorney Steven Brantley at (571) 272-3203. All other inquiries concerning either the examination procedures or status of the application should be directed to the Technology Center.

Charles Steven Brantley
Senior Petitions Attorney
Office of Petitions

ATTACHMENT: Corrected Filing Receipt

UNITED STATES PATENT AND TRADEMARK OFFICE

UNITED STATES DEPARTMENT OF COMMERCE
United States Patent and Trademark Office
Address: COMMISSIONER FOR PATENTS
P.O. Box 1450
Alexandria, Virginia 22313-1450
www.uspto.gov

APPLICATION NUMBER	FILING or 371(c) DATE	GRP ART UNIT	FIL FEE REC'D	ATTY.DOCKET.NO	TOT CLAIMS	IND CLAIMS
11/265,803	11/02/2005	2832	2782	1640-2 CON CIP	42	4

CONFIRMATION NO. 7586

CORRECTED FILING RECEIPT

73609
Leviton Manufacturing Company Incorporated (CDFS)
c/o Carter, DeLuca, Farrell & Schmidt, LLP
445 Broad Hollow Rd. Ste. 420
Melville, NY 11747

OC000000045256712

Date Mailed: 01/04/2011

Receipt is acknowledged of this non-provisional patent application. The application will be taken up for examination in due course. Applicant will be notified as to the results of the examination. Any correspondence concerning the application must include the following identification information: the U.S. APPLICATION NUMBER, FILING DATE, NAME OF APPLICANT, and TITLE OF INVENTION. Fees transmitted by check or draft are subject to collection. Please verify the accuracy of the data presented on this receipt. **If an error is noted on this Filing Receipt, please submit a written request for a Filing Receipt Correction. Please provide a copy of this Filing Receipt with the changes noted thereon. If you received a "Notice to File Missing Parts" for this application, please submit any corrections to this Filing Receipt with your reply to the Notice. When the USPTO processes the reply to the Notice, the USPTO will generate another Filing Receipt incorporating the requested corrections**

Applicant(s)

James A. Porter, Farmingdale, NY;
James Richter, Bethpage, NY;
Frantz Germain, Rosedale, NY;
Armando Calixto, Floral Park, NY;

Power of Attorney: The patent practitioners associated with Customer Number 73609

Domestic Priority data as claimed by applicant

This application is a CIP of 10/692,056 10/22/2003 PAT 7,049,911
which claims benefit of 60/444,469 02/03/2003
and is a CIP of 10/690,776 10/22/2003 PAT 7,737,809
which claims benefit of 60/444,469 02/03/2003

Foreign Applications

If Required, Foreign Filing License Granted: 12/01/2005

The country code and number of your priority application, to be used for filing abroad under the Paris Convention, is **US 11/265,803**

Projected Publication Date: Not Applicable

Non-Publication Request: No

Early Publication Request: No

Title

CIRCUIT INTERRUPTING DEVICE WITH REVERSE WIRING PROTECTION

Preliminary Class

335

PROTECTING YOUR INVENTION OUTSIDE THE UNITED STATES

Since the rights granted by a U.S. patent extend only throughout the territory of the United States and have no effect in a foreign country, an inventor who wishes patent protection in another country must apply for a patent in a specific country or in regional patent offices. Applicants may wish to consider the filing of an international application under the Patent Cooperation Treaty (PCT). An international (PCT) application generally has the same effect as a regular national patent application in each PCT-member country. The PCT process **simplifies** the filing of patent applications on the same invention in member countries, but **does not result** in a grant of "an international patent" and does not eliminate the need of applicants to file additional documents and fees in countries where patent protection is desired.

Almost every country has its own patent law, and a person desiring a patent in a particular country must make an application for patent in that country in accordance with its particular laws. Since the laws of many countries differ in various respects from the patent law of the United States, applicants are advised to seek guidance from specific foreign countries to ensure that patent rights are not lost prematurely.

Applicants also are advised that in the case of inventions made in the United States, the Director of the USPTO must issue a license before applicants can apply for a patent in a foreign country. The filing of a U.S. patent application serves as a request for a foreign filing license. The application's filing receipt contains further information and guidance as to the status of applicant's license for foreign filing.

Applicants may wish to consult the USPTO booklet, "General Information Concerning Patents" (specifically, the section entitled "Treaties and Foreign Patents") for more information on timeframes and deadlines for filing foreign patent applications. The guide is available either by contacting the USPTO Contact Center at 800-786-9199, or it can be viewed on the USPTO website at http://www.uspto.gov/web/offices/pac/doc/general/index.html.

For information on preventing theft of your intellectual property (patents, trademarks and copyrights), you may wish to consult the U.S. Government website, http://www.stopfakes.gov. Part of a Department of Commerce initiative, this website includes self-help "toolkits" giving innovators guidance on how to protect intellectual property in specific countries such as China, Korea and Mexico. For questions regarding patent enforcement issues, applicants may call the U.S. Government hotline at 1-866-999-HALT (1-866-999-4158).

LICENSE FOR FOREIGN FILING UNDER

Title 35, United States Code, Section 184

Title 37, Code of Federal Regulations, 5.11 & 5.15

GRANTED

The applicant has been granted a license under 35 U.S.C. 184, if the phrase "IF REQUIRED, FOREIGN FILING LICENSE GRANTED" followed by a date appears on this form. Such licenses are issued in all applications where the conditions for issuance of a license have been met, regardless of whether or not a license may be required as

set forth in 37 CFR 5.15. The scope and limitations of this license are set forth in 37 CFR 5.15(a) unless an earlier license has been issued under 37 CFR 5.15(b). The license is subject to revocation upon written notification. The date indicated is the effective date of the license, unless an earlier license of similar scope has been granted under 37 CFR 5.13 or 5.14.

This license is to be retained by the licensee and may be used at any time on or after the effective date thereof unless it is revoked. This license is automatically transferred to any related applications(s) filed under 37 CFR 1.53(d). This license is not retroactive.

The grant of a license does not in any way lessen the responsibility of a licensee for the security of the subject matter as imposed by any Government contract or the provisions of existing laws relating to espionage and the national security or the export of technical data. Licensees should apprise themselves of current regulations especially with respect to certain countries, of other agencies, particularly the Office of Defense Trade Controls, Department of State (with respect to Arms, Munitions and Implements of War (22 CFR 121-128)); the Bureau of Industry and Security, Department of Commerce (15 CFR parts 730-774); the Office of Foreign AssetsControl, Department of Treasury (31 CFR Parts 500+) and the Department of Energy.

NOT GRANTED

No license under 35 U.S.C. 184 has been granted at this time, if the phrase "IF REQUIRED, FOREIGN FILING LICENSE GRANTED" DOES NOT appear on this form. Applicant may still petition for a license under 37 CFR 5.12, if a license is desired before the expiration of 6 months from the filing date of the application. If 6 months has lapsed from the filing date of this application and the licensee has not received any indication of a secrecy order under 35 U.S.C. 181, the licensee may foreign file the application pursuant to 37 CFR 5.15(b).

SPE RESPONSE FOR CERTIFICATE OF CORRECTION

Paper No.:20110906

DATE : September 12, 2011

TO SPE OF : ART UNIT 2830

SUBJECT : Request for Certificate of Correction on Patent No.: 7,944,331

A response is requested with respect to the accompanying request for a certificate of correction.

Please complete this form and return with file, within **7** days to:
Certificates of Correction Branch - PK 3-910
Palm location **7590** - Tel. No. 305-8201

With respect to the change(s) requested, correcting Office and/or Applicant's errors, should the patent read as shown in the certificate of correction? No new matter should be introduced, nor should the scope or meaning of the claims be changed.

Thank You For Your Assistance **Certificates of Correction Branch**

The request for issuing the above-identified correction(s) is hereby:
Note your decision on the appropriate box.

☒ **Approved** **All** changes apply.

☐ **Approved in Part** Specify below which changes **do not** apply.

☐ **Denied** State the reasons for denial below.

Comments:

Expansion of the related US application data to include the provisional application60/444,469 and the associated filing date

SPE: /Elvin G. Enad/ **Art Unit** 2832

DO NOT ENTER: /BR/

Attorney Docket No. 1640-2CONCIP

IN THE UNITED STATES PATENT AND TRADEMARK OFFICE

Patentees: Porter et al.

Patent No.: 7,944,331

Appln. No.: 11/265,803

Issued: May 17, 2011

For: CIRCUIT INTERRUPTING DEVICE WITH REVERSE WIRING PROTECTION

Attn: Certificate of Correction Branch
Commissioner for Patents
P.O. Box 1450
Alexandria, VA 22313-1450

REQUEST FOR ISSUANCE OF A CERTIFICATE OF CORRECTION UNDER 35 U.S.C. §255 AND 37 C.F.R. §1.323

In accordance with 35 U.S.C. §255, 37 C.F.R. §1.323, and M.P.E.P. § 1481, it is respectfully requested that a Certificate of Correction be issued for U.S. Patent No. 7,944,331 to clarify several claims. Form PTO/SB/44 making the corrections is attached. The requested claim clarifications are the following:

Column 15, in Claim 16, lines 47-49, please delete "the first, second and third pair of terminals are electrically isolated from each other;" and replace with --the first, second and third pairs of terminals are capable of being electrically isolated from each other;--.

Column 15, in Claim 16, lines 50-54, please delete "at least one movable and substantially rectangular bridge electrically isolated from said first, second and third pair of terminals and capable of electrically connecting the first, second and third pair of terminals to each other;" and replace with --at least one movable and substantially rectangular bridge electrically capable of being isolated from said first, second and third pairs of terminals and capable of electrically connecting a first terminal of the first pair of

terminals, a first terminal of the second pair of terminals, and a first terminal of the third pair of terminals to each other;--.

Column 15, in Claim 17, lines 62-63, please delete "electrically connect the first pair of terminals to the second and third pairs of terminals when the device is reset" and replace with --electrically connect the first terminal of the first pair of terminals to the first terminal of the second pair of terminals and the first terminal of the third pair of terminals when the device is reset--.

Column 15, in Claim 17, lines 65-67, please delete "disconnect electrically the first, second, and third pairs of terminals from each other when the device is in a trip condition." and replace with --disconnect electrically the first terminal of the first pair of terminals, the first terminal of the second pair of terminals, and the first terminal of the third pair of terminals from each other when the device is in a trip condition.--

Column 16, in Claim 18, lines 3-4, please delete "between the first, second and third pairs of terminals." and replace with --between the first terminal of the first pair of terminals, the first terminal of the second pair of terminals, and the first terminal of the third pairs of terminals.--.

Column 16, in Claim 24, lines 27-30, please delete "three pairs of contacts attached thereto and where such first pair is positioned so as to make electrical contact with a corresponding pair of line terminal contacts when the movable bridge is positioned in the first position;" and replace with --three pairs of contacts attached thereto and where such a first contact of said first pair of contacts is positioned so as to make electrical contact with a first line terminal contact of a corresponding pair of line terminal contacts when the movable bridge is positioned in the first position;--.

Column 16, in Claim 24, lines 31-34, please delete "a second pair of contacts positioned so as to make electrical contact with a corresponding pair of load terminal contacts when the movable bridge is positioned in the first position;" and replace with --a first contact of said second pair of contacts positioned so as to make electrical contact with a first load terminal contact of a corresponding pair of load terminal contacts when the movable bridge is positioned in the first position;--

Column 16, in Claim 24, lines 35-38, please delete "a third pair of contacts positioned so as to make electrical contact with a corresponding pair of user accessible terminal contacts when the movable bridge is positioned in the first position." and replace with -- a first contact of said third pair of contacts positioned so as to make electrical contact with a first user accessible terminal contact of a corresponding pair of user accessible terminal contacts when the movable bridge is positioned in the first position.--.

Column 16, in Claim 26, lines 42-24, please delete "where the third pair of terminals comprises a pair of contacts connected to a pair of electrically conducting frames forming a pair of receptacles that is accessible to a user of the device." and replace with --where the third pair of terminals comprises a first contact of a pair of contacts, wherein the first contact is connected to a first electrically conducting frame of a pair of electrically conducting frames forming a pair of receptacles that is accessible to a user of the device.--

The clarifications are easily seen in Fig. 12C of the patent that shows two bridges. As the user releases the depressed reset button, the spring bias of the reset button (not shown in FIG. 12C) causes the lifter 178 (preferably made from electrically non-conducting material) and the attached floating bridges to move in the direction shown by arrow 165 allowing the line contacts (137, 149), face contacts (168, 174) and load contacts (170, 172) of the floating bridges to electrically connect to the line (135, 151), load (158, 162) and face contacts (156, 160) respectively thus resetting the device. The face terminal 148 has face contact 156 and face terminal 146 (only a portion of which is shown in FIG. 12C) has face contact 160. The load terminals 132 and 154 have load contacts 158 and 162 respectively. Col. 10, lns. 36-48. Fig. 12C is reproduced below:

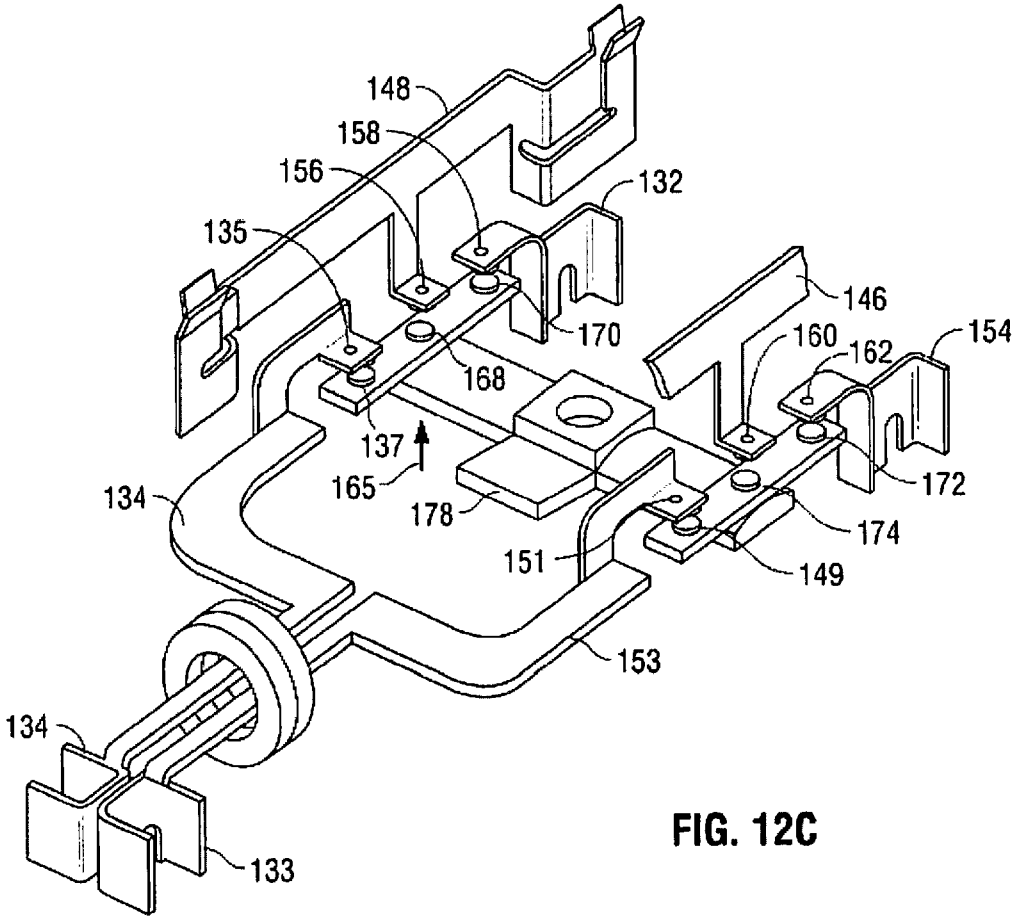

FIG. 12C

Please charge the required fee of $100 to Deposit Account No. **12-1185**. The Commissioner is hereby authorized to charge any deficiency, or credit any overpayment to Deposit Account No. **12-1185**.

If the Commissioner has any questions or comments, he is respectfully requested to contact the undersigned.

Respectfully Submitted,

George Likourezos
Reg. No. 40,067
Attorney for Patentees

CARTER, DELUCA, FARRELL & SCHMIDT, LLP
445 Broad Hollow Road, Suite 420
Melville, New York 11747
Telephone: (631) 501-5700
Facsimile: (631) 501-3526

APPROVED: /BR/

Attorney Docket No. 1640-2 CON CIP

IN THE UNITED STATES PATENT AND TRADEMARK OFFICE

Patentee(s): Porter et al.

Patent No.: 7,944,331 B2

Issued: May 17, 2011 Dated: August 23, 2011

For: CIRCUIT INTERRUPTING DEVICE WITH
REVERSE WIRING PROTECTION

Attn: Certificate of Correction Branch
Commissioner for Patents
P.O. Box 1450
Alexandria, VA 22313-1450

REQUEST FOR ISSUANCE OF A CERTIFICATE OF CORRECTION UNDER 35 U.S.C. §254 AND C.F.R. §1.322

In accordance with 35 U.S.C. §254, 37 C.F.R. §1.322 and M.P.E.P. §§1480 and 1485, it is respectfully requested that a Certificate of Correction be issued for the following reasons:

Page 1, Cover Sheet:

Related U.S. Application Data, (63), "Continuation-in-part of application No. 10/692,056, filed on Oct. 22, 2003, now Pat. No. 7,049,911, which is a continuation of application No. 10/690,776, filed on Oct. 22, 2003, now Pat. No. 7, 737,809." and (60) "Provisional application No. 60/444,469, filed on Feb. 3, 2003." should read as follows:

-- This application is a continuation-in-part of an application having Application Ser. No. 10/692,056 filed on Oct. 22, 2003, now U.S. Pat. No. 7,049,911 which issued on May 23, 2006, which claims priority to a provisional application having Provisional Application No. 60/444,469 filed on Feb. 3, 2003. This application is also a continuation-in-part application of an application having Application Ser. No. 10/690,776 filed on Oct. 22, 2003, now U.S. Pat. No. 7,737,809 which issued on June 15, 2010, which claims priority to a provisional application having Provisional Application No. 60/444,469 filed on Feb. 3, 2003."
--

Form PTO/SB/44 making the correction is attached.

The Commissioner is authorized to charge any deficiency, or credit any overpayment to Deposit Account No. **12-1185**, without further authorization.

Respectfully Submitted,

George Likourezos
Reg. No. 40,067
Attorney for Patentee(s)

CARTER, DELUCA, FARRELL & SCHMIDT, LLP
445 Broad Hollow Road, Suite 420
Melville, New York 11747
Telephone: (631) 501-5700
Facsimile: (631) 501-3526

GL:mg

PTO/SB/44 (09-07)
Approved for use through 08/31/2010. OMB 0651-0033
U.S. Patent and Trademark Office; U.S. DEPARTMENT OF COMMERCE
Under the Paperwork Reduction Act of 1995, no persons are required to respond to a collection of information unless it displays a valid OMB control number.
(Also Form PTO-1050)

UNITED STATES PATENT AND TRADEMARK OFFICE
CERTIFICATE OF CORRECTION

PATENT NO. : 7,944,331

APPLICATION NO.: 11/265,803

ISSUE DATE : May 17, 2011

INVENTOR(S) : James A. Porter, James Richter, Frantz Germain and Armando Calixto

It is certified that an error appears or errors appear in the above-identified patent and that said Letters Patent is hereby corrected as shown below:

Page 1, Cover Sheet:

Related U.S. Application Data, (63), "Continuation-in-part of application No. 10/692,056, filed on Oct. 22, 2003, now Pat. No. 7,049,911, which is a continuation of application No. 10/690,776, filed on Oct. 22, 2003, now Pat. No. 7, 737,809." and (60) "Provisional application No. 60/444,469, filed on Feb. 3, 2003." should read as follows:

-- This application is a continuation-in-part of an application having Application Ser. No. 10/692,056 filed on Oct. 22, 2003, now U.S. Pat. No. 7,049,911 which issued on May 23, 2006, which claims priority to a provisional application having Provisional Application No. 60/444,469 filed on Feb. 3, 2003. This application is also a continuation-in-part application of an application having Application Ser. No. 10/690,776 filed on Oct. 22, 2003, now U.S. Pat. No. 7,737,809 which issued on June 15, 2010, which claims priority to a provisional application having Provisional Application No. 60/444,469 filed on Feb. 3, 2003." --

MAILING ADDRESS OF SENDER (Please do not use customer number below):

Carter, DeLuca, Farrell & Schmidt, LLP
445 Broad Hollow Road, Suite 420
Melville, NY 11747

This collection of information is required by 37 CFR 1.322, 1.323, and 1.324. The information is required to obtain or retain a benefit by the public which is to file (and by the USPTO to process) an application. Confidentiality is governed by 35 U.S.C. 122 and 37 CFR 1.14. This collection is estimated to take 1.0 hour to complete, including gathering, preparing, and submitting the completed application form to the USPTO. Time will vary depending upon the individual case. Any comments on the amount of time you require to complete this form and/or suggestions for reducing this burden, should be sent to the Chief Information Officer, U.S. Patent and Trademark Office, U.S. Department of Commerce, P.O. Box 1450, Alexandria, VA 22313-1450. DO NOT SEND FEES OR COMPLETED FORMS TO THIS ADDRESS. **SEND TO: Attention Certificate of Corrections Branch, Commissioner for Patents, P.O. Box 1450, Alexandria, VA 22313-1450.**

If you need assistance in completing the form, call 1-800-PTO-9199 and select option 2.

UNITED STATES PATENT AND TRADEMARK OFFICE

UNITED STATES DEPARTMENT OF COMMERCE
United States Patent and Trademark Office
Address: COMMISSIONER FOR PATENTS
P.O. Box 1450
Alexandria, Virginia 22313-1450
www.uspto.gov

APPLICATION NO.	FILING DATE	FIRST NAMED INVENTOR	ATTORNEY DOCKET NO.	CONFIRMATION NO.
11/265,803	11/02/2005	James A. Porter	1640-2 CON CIP	7586

73609 7590 10/20/2011
Leviton Manufacturing Company Incorporated (CDFS)
c/o Carter, DeLuca, Farrell & Schmidt, LLP
445 Broad Hollow Rd. Ste. 420
Melville, NY 11747

EXAMINER
ROJAS, BERNARD

ART UNIT	PAPER NUMBER
2832	

NOTIFICATION DATE	DELIVERY MODE
10/20/2011	ELECTRONIC

Please find below and/or attached an Office communication concerning this application or proceeding.

The time period for reply, if any, is set in the attached communication.

Notice of the Office communication was sent electronically on above-indicated "Notification Date" to the following e-mail address(es):

docket@cdfslaw.com
glikourezos@cdfslaw.com
rrudinsky@cdfslaw.com

SPE RESPONSE FOR CERTIFICATE OF CORRECTION

Paper No.:20110921

DATE : October 14, 2011

TO SPE OF : ART UNIT 2832

SUBJECT : Request for Certificate of Correction on Patent No.: 7,994,331

A response is requested with respect to the accompanying request for a certificate of correction.

Please complete this form and return with file, within **7** days to:
Certificates of Correction Branch - ST (South Tower) 9A22
Palm location **7590** - Tel. No. (703) 305-8309

With respect to the change(s) requested, correcting Office and/or Applicant's errors, should the patent read as shown in the certificate of correction? No new matter should be introduced, nor should the scope or meaning of the claims be changed.

Thank You For Your Assistance **Certificates of Correction Branch**

The request for issuing the above-identified correction(s) is hereby:

Note your decision on the appropriated box.

☐ **Approved** All changes apply.

☒ **Approved in Part** Specify below which changes **do not** apply.

☐ **Denied** State the reasons for denial below.

Comments:

The Request Certificate of Correction filed 06/23/2011 is denied. The amendment to the claims filed on 6/23/2011 is disapproved because it changes the scope of the claims that were originally allowed and therefore would require further search and consideration.

The Request for Certificate of Correction filed 08/23/2011is approved as it merely an expansion of the related US application data to include application 60/444,469 and the associated filing date. The additional material does not change the scope of the invention and/or claims

/ELVIN G ENAD/
Supervisory Patent Examiner.Art Unit 2832

UNITED STATES PATENT AND TRADEMARK OFFICE

UNITED STATES DEPARTMENT OF COMMERCE
United States Patent and Trademark Office
Address: COMMISSIONER FOR PATENTS
P.O. Box 1450
Alexandria, Virginia 22313-1450
www.uspto.gov

APPLICATION NO.	FILING DATE	FIRST NAMED INVENTOR	ATTORNEY DOCKET NO.	CONFIRMATION NO.
11/265,803	11/02/2005	James A. Porter	1640-2 CON CIP	7586

73609 7590 03/13/2012
Leviton Manufacturing Company Incorporated (CDFS)
c/o Carter, DeLuca, Farrell & Schmidt, LLP
445 Broad Hollow Rd. Ste. 420
Melville, NY 11747

EXAMINER
ROJAS, BERNARD

ART UNIT	PAPER NUMBER
2832	

NOTIFICATION DATE	DELIVERY MODE
03/13/2012	ELECTRONIC

Please find below and/or attached an Office communication concerning this application or proceeding.

The time period for reply, if any, is set in the attached communication.

Notice of the Office communication was sent electronically on above-indicated "Notification Date" to the following e-mail address(es):

docket@cdfslaw.com
glikourezos@cdfslaw.com
rrudinsky@cdfslaw.com

SPE RESPONSE FOR CERTIFICATE OF CORRECTION

Paper No.:20120306

DATE : January 20, 2012

TO SPE OF : ART UNIT 2832

SUBJECT : Request for Certificate of Correction on Patent No.: 7,994,331

A response is requested with respect to the accompanying request for a certificate of correction.

Please complete this form and return with file, within **7** days to:
Certificates of Correction Branch - ST (South Tower) 9A22
Palm location **7590** - Tel. No. (703) 305-8309

With respect to the change(s) requested, correcting Office and/or Applicant's errors, should the patent read as shown in the certificate of correction? No new matter should be introduced, nor should the scope or meaning of the claims be changed.

Thank You For Your Assistance **Certificates of Correction Branch**

The request for issuing the above-identified correction(s) is hereby:

Note your decision on the appropriated box.

☒ **Approved** All changes apply.

☐ **Approved in Part** Specify below which changes **do not** apply.

☐ **Denied** State the reasons for denial below.

Comments:

The amendments to claims 16 and 17 merely clarify the claims and does not change the scope.

/ELVIN G ENAD/
Supervisory Patent Examiner.Art Unit 2832

OK TO ENTER: /BR/

Attorney Docket No. 1640-2CONCIP

IN THE UNITED STATES PATENT AND TRADEMARK OFFICE

Patentees: Porter et al.

Patent No.: 7,944,331

Appln. No.: 11/265,803

Issued: May 17, 2011

Dated: January 20, 2012

For: CIRCUIT INTERRUPTING DEVICE WITH REVERSE WIRING PROTECTION

Attn: Decisions and Certificates of Correction Branch
Commissioner for Patents
P.O. Box 1450
Alexandria, VA 22313-1450

REQUEST FOR ISSUANCE OF A CERTIFICATE OF CORRECTION UNDER 35 U.S.C. §255 AND 37 C.F.R. §1.323

In accordance with 35 U.S.C. §255, 37 C.F.R. §1.323, and M.P.E.P. § 1481, it is respectfully requested that a Certificate of Correction be issued for U.S. Patent No. 7,944,331 to clarify several claims. Form PTO/SB/44 making the corrections is attached. The undersigned representative previously filed two requests for a Certificate of Correction for the above-noted patent. One of the requests was to correct the priority data and the other request was to clarify several of the issued claims. The former request was approved and the latter request was denied "because it changes the scope of the claims that were originally allowed and therefore would require further search and consideration."

It is respectfully submitted that the Patentees are not seeking to change the scope of the claims, but are hereby respectfully requesting the changes to issued Claims 16 and 17 to ensure clarity. The clarifications to Claims 16 and 17 are obvious to one of ordinary skill in the art, including the Examiner who allowed the claims. Specifically, it is obvious to one of ordinary skill in the art that the "pair" of terminals, as recited by

Claims 16 and 17, refer to phase and neutral terminals of the circuit interrupting device. In order for the device to operate, the phase and neutral terminals have to be connected to respective phase and neutral terminals of the second and third pairs of terminals. The proposed clarification to the claims does not materially affect or change the scope or meaning of the issued patent.

The proposed clarifications to Claims 16 and 17 are the following:

Column 15, in Claim 16, line 45, please delete "pair or terminals;" and replace with --pair of terminals, respectively;-- and in line 53, please delete "other;" and replace with --other, respectively;--.

Column 15, in Claim 17, line 63, please add --, respectively,-- between the words "terminals" and "when".

The clarifications are easily seen in Fig. 12C of the patent that shows two bridges. As the user releases the depressed reset button, the spring bias of the reset button (not shown in FIG. 12C) causes the lifter 178 (preferably made from electrically non-conducting material) and the attached floating bridges to move in the direction shown by arrow 165 allowing the line contacts (137, 149), face contacts (168, 174) and load contacts (170, 172) of the floating bridges to electrically connect to the line (135, 151), load (158, 162) and face contacts (156, 160) respectively thus resetting the device. The face terminal 148 has face contact 156 and face terminal 146 (only a portion of which is shown in FIG. 12C) has face contact 160. The load terminals 132 and 154 have load contacts 158 and 162 respectively. Col. 10, lns. 36-48. Fig. 12C is reproduced below:

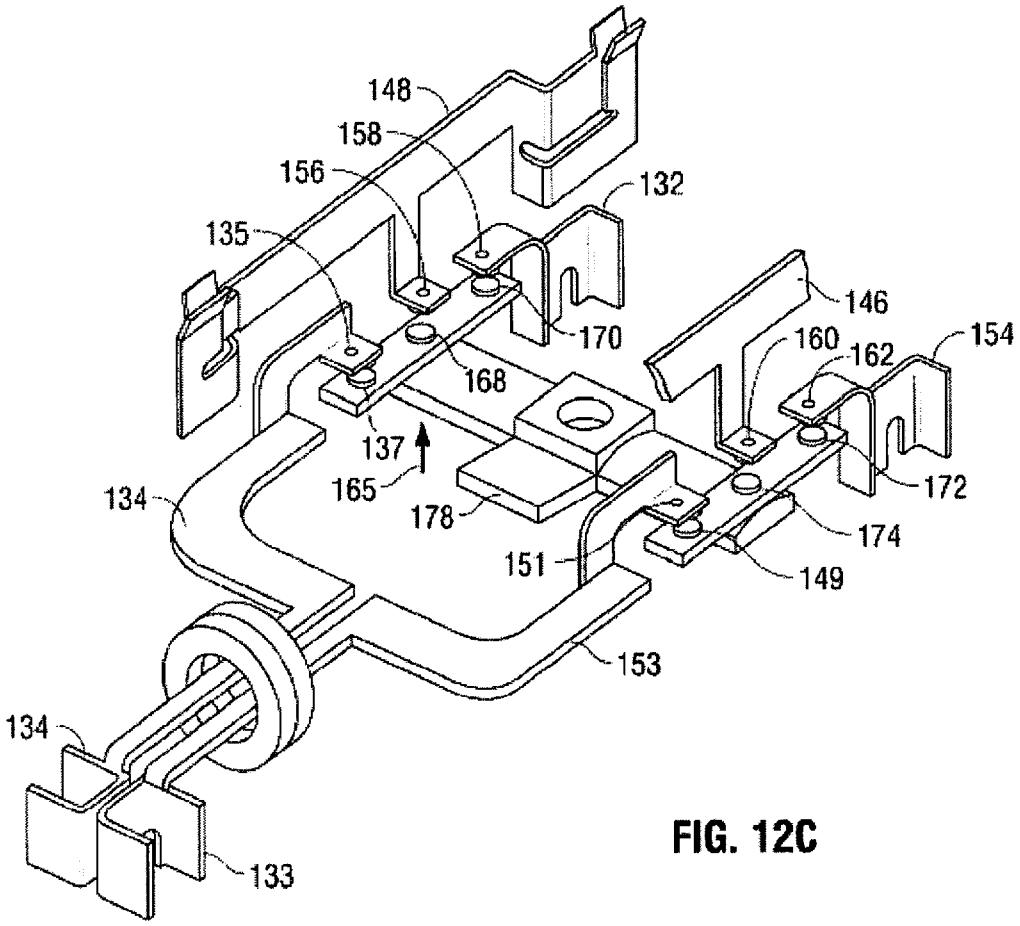

FIG. 12C

Please charge the required fee of $100 to Deposit Account No. **12-1185**. The Commissioner is hereby authorized to charge any deficiency, or credit any overpayment to Deposit Account No. **12-1185**.

If the Commissioner has any questions or comments, he is respectfully requested to contact the undersigned.

Respectfully Submitted,

George Likourezos
Reg. No. 40,067
Attorney for Patentees

CARTER, DELUCA, FARRELL & SCHMIDT, LLP
445 Broad Hollow Road, Suite 420
Melville, New York 11747
Telephone: (631) 501-5700
Facsimile: (631) 501-3526

UNITED STATES PATENT AND TRADEMARK OFFICE

Commissioner for Patents
United States Patent and Trademark Office
P.O. Box 1450
Alexandria, VA 22313-1450
www.uspto.gov

PAUL W. MARTIN
NCR CORPORATION, LAW DEPT.
3097 SATELLITE BLVD., 2nd FLOOR
DULUTH GA 30096

MAILED
JUL 27 2011
OFFICE OF PETITIONS

In re Application of	:	
OSBORNE, STEVE	:	
Application No. 11/265,807	:	DECISION ON PETITION
Filed: 11/03/2005	:	
Attorney Docket No. 11413.00	:	

This is a decision on the petition under 37 CFR 1.181 (no fee), filed July 12, 2011, requesting withdrawal of the holding of abandonment in the above-identified application.

The petition is **GRANTED**.

This application was held abandoned for failure to reply to the final Office action mailed October 26, 2010, which set a three-month shortened statutory period for reply. In the absence of a timely filed reply, the application was held abandoned and a Notice of Abandonment was mailed on May 6, 2011.

Applicant asserts that the final Office action dated October 26, 2010[1], was not received.

A review of the written record indicates no irregularity in the mailing of the final Office action and in the absence of any irregularity, there is a strong presumption that the Office action was properly mailed to the practitioner at the address of record. This presumption may be overcome by a showing that the final Office action was not in fact received.

[1] On Page 2 of the present petition, applicant asserts that "the Office action of November 16, 2010 was not received at the correspondence address of record..." It appears that the date of November 16, 2010, is a typographical error because applicants also refer to the final Office action as mailed on October 26, 2010. If this interpretation is incorrect, applicant must inform the USPTO immediately.

As stated in Section 711.03(c)(I)(A) of the Manual for Patent Examining Procedure:

> In Delgar v. Schulyer, 172 USPQ 513 (D.D.C. 1971), the court decided that the Office should mail a new Notice of Allowance in view of the evidence presented in support of the contention that the applicant's representative did not receive the original Notice of Allowance. Under the reasoning of Delgar, an allegation that an Office action was never received may be considered in a petition to withdraw the holding of abandonment. If adequately supported, the Office may grant the petition to withdraw the holding of abandonment and remail the Office action. That is, the reasoning of Delgar is applicable regardless of whether an application is held abandoned for failure to timely pay the issue fee (35 U.S.C. 151) or for failure to prosecute (35 U.S.C. 133).
>
> To minimize costs and burdens to practitioners and the Office, the Office has modified the showing required to establish nonreceipt of an Office action. The showing required to establish nonreceipt of an Office communication must include a statement from the practitioner describing the system used for recording an Office action received at the correspondence address of record with the USPTO. The statement should establish that the docketing system is sufficiently reliable. It is expected that the record would include, but not be limited to, the application number, attorney docket number, the mail date of the Office action and the due date for the response.
>
> Practitioner must state that the Office action was not received at the correspondence address of record, and that a search of the practitioner's record(s), including any file jacket or the equivalent, and the application contents, indicates that the Office action was not received. A copy of the record(s) used by the practitioner where the non-received Office action would have been entered had it been received is required.
>
> A copy of the practitioner's record(s) required to show non-receipt of the Office action should include the master docket for the firm. That is, if a three month period for reply was set in the nonreceived Office action, a copy of the master docket report showing all replies docketed for a date three months from the mail date of the nonreceived Office action must be submitted as documentary proof of nonreceipt of the Office action. If no such master docket exists, the practitioner should so state and provide other evidence such as, but not limited to, the following: the application file jacket; incoming mail log; calendar; reminder system; or the individual docket record for the application in question.
>
> The showing outlined above may not be sufficient if there are circumstances that point to a conclusion that the Office action may have been lost after receipt rather than a conclusion that the Office action was lost in the mail (e.g., if the practitioner has a history of not receiving Office actions).

After reviewing the documents submitted on petition, the Office concludes that the showing of record is sufficient to warrant withdrawal of the holding of abandonment. The practitioner submitted a copy of the docket record for this application where the nonreceived Office action would have been entered had it been received. Additionally, the practitioner provided a copy of a master docket report showing all replies docketed for a date three months from the mail date of the nonreceived Office action. The practitioner attested to the fact that a search of these records indicated that the final Office action was not received at the correspondence address of record. Accordingly, applicant presented the required showing under 37 CFR 1.181.

The petition under 37 CFR 1.181 is **GRANTED**. The holding of abandonment is hereby withdrawn and the application is returned to pending status.

Technology Center Art Unit 2876 has been advised of this decision. The matter is being referred to the Technology Center's technical support staff for re-mailing of the final Office action of October 26, 2010. The three-month shortened statutory period to reply to the final Office action will be set to run from the re-mailing date of the Office action.

Telephone inquiries related to this decision may be directed to the undersigned at (571) 272-3211.

Christina Tartera Donnell

Christina Tartera Donnell
Senior Petitions Attorney
Office of Petitions

UNITED STATES PATENT AND TRADEMARK OFFICE

Commissioner for Patents
United States Patent and Trademark Office
P.O. Box 1450
Alexandria, VA 22313-1450
www.uspto.gov

THEODORE J. BIELEN JR.
BIELEN, LAMPE, & THOEMING
1390 WILLOW PASS ROAD
SUITE 1020
CONCORD CA 94520

MAILED

JAN 03 2011

OFFICE OF PETITIONS

In re Application of
Thomas W. Hagler
Application No. 11/265,874
Filed: November 2, 2005
Attorney Docket Number: 15516

ON PETITION

This is a decision on the petition, filed December 10, 2010 under 37 CFR 1.137(b)[1], to revive the above identified application.

The petition is **GRANTED**.

While the issue fee was paid on November 10, 2008, it was paid after the due date and thus this application became abandoned for failure to timely file a response to the Notice of Allowance mailed August 8, 2008. Accordingly, the Notice of Abandonment was mailed on December 3, 2008.

All other requirements of 37 CFR 1.137(b) having now been met, this matter is being referred to the Publishing Division to be processed into a patent.

Telephone inquiries concerning this matter may be directed to the undersigned Petitions Attorney at (571) 272-3212.

Patricia Faison-Ball

Patricia Faison-Ball
Senior Petitions Attorney
Office of Petitions

---

[1]Effective December 1, 1997, the provisions of 37 CFR 1.137(b) now provide that where the delay in reply was unintentional, a petition may be filed to revive an abandoned application or a lapsed patent pursuant to 37 CFR 1.137(b). A grantable petition filed under the provisions of 37 CFR 1.137(b) must be accompanied by:

(1) the required reply, unless previously filed. In a nonprovisional application abandoned for failure to prosecute, the required reply may be met by the filing of a continuing application. In an application or patent, abandoned or lapsed for failure to pay the issue fee or any portion thereof, the required reply must be the payment of the issue fee or any outstanding balance thereof.

(2) the petition fee as set forth in 37 CFR 1.17(m);

(3) a statement that the entire delay in filing the required reply from the due date for the reply until the filing of a grantable petition pursuant to 37 CFR 1.137(b) was unintentional. The Commissioner may required additional information where there is a question whether the delay was unintentional; and

(4) any terminal disclaimer (and fee as set forth in 37 CFR 1.20(d)) required pursuant to 37 CFR 1.137(c)).

UNITED STATES PATENT AND TRADEMARK OFFICE

Commissioner for Patents
United States Patent and Trademark Office
P.O. Box 1450
Alexandria, VA 22313-1450
www.uspto.gov

PHILIP S. JOHNSON
JOHNSON & JOHNSON
ONE JOHNSON & JOHNSON PLAZA
NEW BRUNSWICK NJ 08933-7003

MAILED
MAY 3 1 2011
OFFICE OF PETITIONS

In re Patent of Selover et al	:	DECISION ON
Patent No. 7,874,982	:	REQUEST FOR RECONSIDERATION
Issue Date: January 25, 2011	:	OF
Application No. 11/265,902	:	PATENT TERM ADJUSTMENT &
Filed: November 2, 2005	:	NOTICE OF INTENT TO ISSUE
Atty Docket No. DUQ-016RCE3/ DEP5585USNP	:	CERTIFICATE OF CORRECTION

This is a decision on the REQUEST FOR RECONSIDERATION OF PATENT TERM ADJUSTMENT UNDER 37 CFR 1.705(d) AFTER PATENT ISSUANCE, filed March 24, 2011. Patentees request that the revised patent term adjustment indicated on the patent be corrected from one hundred sixty-one (161) days to two hundred sixty (260) days.

The request for reconsideration of patent term adjustment is **GRANTED**.

The patent term adjustment indicated in the patent is to be corrected by issuance of a certificate of correction showing a revised Patent Term Adjustment of two hundred sixty (260) days.

On January 25, 2011, the above-identified application matured into U.S. Patent No. 7,874,982 with a revised patent term adjustment of 161 days. On March 24, 2011, patentees timely filed the instant petition.

Patentees argue that the patent term adjustment indicated in the patent is incorrect and should be recalculated because the Office should not have charged applicants with a 111 day reduction under 37 CFR 1.704(c)(10) for the filing of a Communication Regarding Patent Term Adjustment on October 7, 2010, after the mailing of the Notice of Allowance on July 8, 2010.

Patentees are correct. A review of the record confirms that a period of reduction of 111 days was entered for the filing of a candor letter on October 7, 2010.

§ 1.704(e) provides that:

> Submission of an application for patent term adjustment under § 1.705(b) (with or without request under §1.705(c) for reinstatement of reduced patent term adjustment) will not be considered a failure to engage in reasonable efforts to conclude prosecution (processing or examination) of the application under paragraph (c)(10) of this section.

Likewise, filing of a letter pursuant to comment 43 is covered by 37 CFR 1.704(e). Therefore, the Patent Term Adjustment was incorrectly reduced. Consequently 111 days will be properly restored to patentees' patent term adjustment.

Patentees are correct that the Office failed to enter a reduction for an Information Disclosure Statement filed on February 27, 2008. After applicants filed a reply on February 15, 2008 to a non-final Office action, applicants submitted a supplemental reply or paper in the form of an Information Disclosure Statement (IDS) on February 27, 2008. The record does not support a conclusion that the examiner expressly requested the filing of the IDS. Further, a review of the IDS, filed February 27, 2008, reveals that applicants did not include a statement under 37 CFR 1.704(d).[1] Thus, applicants failed to engage in reasonable efforts to conclude prosecution of the application. The period of adjustment should have been reduced by 12 days pursuant to 37 CFR 1.704(c)(8), counting the number of days beginning on the day after the date the initial reply was filed, February 16, 2008, and ending on the date that the

---

[1] Pursuant to 37 CFR § 1.704(d):

> A paper containing only an information disclosure statement in compliance with §§ 1.97 and 1.98 will not be considered a failure to engage in reasonable efforts to conclude prosecution (processing or examination) of the application under paragraphs (c)(6), (c)(8), (c)(9), or (c)(10) of this section if it is accompanied by a statement that each item of information contained in the information disclosure statement was first cited in any communication from a foreign patent office in a counterpart application and that this communication was not received by any individual designated in § 1.56(c) more than thirty days prior to the filing of the information disclosure statement. This thirty-day period is not extendable.

IDS was filed, February 27, 2008. Accordingly, a period of reduction of 12 days is being entered.

In view thereof, the patent term adjustment indicated in the patent is to be corrected by issuance of a certificate of correction showing a revised Patent Term Adjustment of two hundred sixty (260) days, which is 215 days of A delay + 126 days of B delay minus 81 (12 + 28 + 41) days of Applicant delay.

No fee is required.

The application file is being forwarded to the Certificates of Correction Branch for issuance of a certificate of correction in order to rectify this error. The Office will issue a certificate of correction indicating that the term of the above-identified patent is extended or adjusted by **two hundred sixty (260)** days.

Telephone inquiries specific to this decision should be directed to the undersigned at (571) 272-3230.

Shirene Willis Brantley

Shirene Willis Brantley
Senior Petitions Attorney
Office of Petitions

Enclosure: Copy of DRAFT Certificate of Correction

UNITED STATES PATENT AND TRADEMARK OFFICE

CERTIFICATE OF CORRECTION

PATENT : 7,874,982 B2

DATED : **January 25, 2011** **DRAFT**

INVENTOR(S) : Selover et al.

It is certified that error appears in the above-identified patent and that said Letters Patent is hereby corrected as shown below:

On the cover page,

[*] Notice: Subject to any disclaimer, the term of this patent is extended or adjusted under 35 U.S.C. 154(b) by 161 days

Delete the phrase "by 161 days" and insert – by 260 days--

UNITED STATES PATENT AND TRADEMARK OFFICE

COMMISSIONER FOR PATENTS
UNITED STATES PATENT AND TRADEMARK OFFICE
P.O. BOX 1450
ALEXANDRIA, VA 22313-1450
www.uspto.gov

Paper No.

LANDO & ANASTASI, LLP
ONE MAIN STREET, SUITE 1100
CAMBRIDGE MA 02142

MAILED
OCT 26 2010
OFFICE OF PETITIONS

In re Patent No. 7,767,420	:	DECISION ON REQUEST
Myette	:	FOR
Issue Date: August 3, 2010	:	RECONSIDERATION OF
Application No. 11/265,908	:	PATENT TERM ADJUSTMENT
Filed: November 3, 2005	:	
Atty Docket No. M2050-701619	:	
	:	

This is a decision on the petition pursuant to 37 C.F.R. 1.705(d), filed on October 1, 2010, requesting that the patent term adjustment indicated on the above-identified patent be corrected to indicate that the term of the above-identified patent is extended or adjusted by five hundred and forty (540) days.

The petition to correct the patent term adjustment indicated on the above-identified patent is **DISMISSED**.

Patentee is given **one (1) month or thirty (30) days**, whichever is longer, from the mail date of this decision to respond. No extensions of time will be granted under 37 C.F.R. § 1.136.

Application No. 11/265,908 matured into U.S. patent No. 7,767,420 on August 3, 2010, with a patent term adjustment of 593 days.

Patentee has indicated that this patent is not subject to a terminal disclaimer.[1]

First, Patentee has omitted one period of examination delay. The issue fee was received on February 3, 2010, and the patent issued four months and 61 days later on August 3, 2010. It

[1] Petition, page 5.

follows that a 61-day adjustment was accorded pursuant to 37 C.F.R. § 1.703(a)(6)[2].

As such, the examination delay totals 366 days (300 + 5 + 61), not 305[3] days.

Second, Patentee has asserted that the 30-day reduction that is associated with the filing of the March 16, 2009 response to a non-final Office action should be 28 days. The 30-day reduction is proper: Patentee will note that this reduction was discussed on pages 3-4 of the decision dated June 24, 2010:

> A non-final Office action was mailed on November 14, 2008, and a response was not received until March 16, 2009, which is three months and 30 days later. As such, a reduction of thirty days was assessed. Patentees have argued that this is improper, and that the reduction should have totaled 28 days, since March 14, 2009 fell on a Saturday. However, Applicants will note that 35 U.S.C. 154(b)(2)(C)(ii)[4] does not require that a reply be filed in the Office within its three (3) month grace period, but simply specifies that there is a patent term adjustment reduction if a reply is not filed within this three (3) month period. Therefore, the "carry-over" provisions of 35 U.S.C. § 21(b)[5] does not apply to the three (3) month period in 35 U.S.C. 154(b)(2)(C)(ii).

It follows that the applicant delay totals 89 (59 + 30) days, not 87[6] days.

Third, as the period from the filing date of the request for continued examination (RCE) to the issue date of the patent is

---

[2] "The period of adjustment under § 1.702(a) is the sum of the following periods…[t]he number of days, if any, in the period beginning on the day after the date that is four months after the date the issue fee was paid and all outstanding requirements were satisfied and ending on the date a patent was issued."

[3] Petition, page 2.

[4] "With respect to adjustments to patent term made under the authority of paragraph (1)(B), an applicant shall be deemed to have failed to engage in reasonable efforts to conclude processing or examination of an application for the cumulative total of any periods of time in excess of 3 months that are taken to respond to a notice from the Office making any rejection, objection, argument, or other request, measuring such 3-month period from the date the notice was given or mailed to the applicant."

[5] "When the day, or the last day, for taking any action or paying any fee in the United States Patent and Trademark Office falls on Saturday, Sunday, or a Federal holiday within the District of Columbia, the action may be taken, or fee paid, on the next succeeding secular or business day."

[6] Petition, page 4.

not included in the "B" delay period, the over three year period begins on November 4, 2008 and ends on September 20, 2009, the day before the first RCE was filed, which amounts to 321 (not 322[7]) days. See U.S.C. 154(b)(1)(B)(i).

The over three years period is 321 days, due to the RCE cut off. There are five days of overlap (July 17, 2009 through July 21, 2009). It follows that the period of "B-delay" totals 316 (321 - 5) days.

It follows that the patent term adjustment is 593 (366 examination delay plus 316 "B-delay" minus 89 applicant delay) days, not 540 days.

The Office acknowledges submission of the $200.00 fee set forth in 37 C.F.R. § 1.18(e). No additional fees are required.

As the patent issued with the correct patent term adjustment, a certificate of correction is not required.

Any response to this decision should indicate in a prominent manner that the attorney handling this matter is Paul Shanoski, and may be submitted by mail,[8] hand-delivery,[9] or facsimile.[10] Registered users of EFS-Web may alternatively submit a response to this decision via EFS-Web.[11]

Telephone inquiries specific to this matter should be directed to the undersigned at (571) 272-3225.

/Paul Shanoski/
Paul Shanoski
Senior Attorney
Office of Petitions

---

[7] Petition, page 3.
[8] Mail Stop Petition, Commissioner for Patents, United States Patent and Trademark Office, P.O. Box 1450, Alexandria, VA, 22313-1450.
[9] Customer Window, Randolph Building, 401 Dulaney Street, Alexandria, VA, 22314.
[10] (571) 273-8300 - please note this is a central facsimile number.
[11] https://sportal.uspto.gov/authenticate/authenticateuserlocalepf.html

UNITED STATES PATENT AND TRADEMARK OFFICE

Commissioner for Patents
United States Patent and Trademark Office
P.O. Box 1450
Alexandria, VA 22313-1450
www.uspto.gov

THE FARRELL LAW FIRM, P.C.
290 Broadhollow Road
Suite 210E
Melville NY 11747

MAILED

JUN 06 2011

OFFICE OF PETITIONS

In re Application of :
Lee et al. :
Application No. 11/265,940 : ON PETITION
Filed: November 3, 2005 :
Attorney Docket No. 678-2008 :

This is a decision on the renewed petition under the unintentional provisions of 37 CFR 1.137(b), filed March 4, 2011, to revive the above-identified application.

The petition is **GRANTED**.

The two-month period for filing an appeal brief (accompanied by the fee required by 37 CFR 41.20(b)(2)), will be the later of the two-month period set in 37 CFR 41.37(a) or one month from the mail date of the decision on the request for Pre-Appeal Brief Review.

This above-identified application became abandoned for failure to file a proper reply to the final Office Action of June 8, 2010. The final Office Action set a three (3) month shortened statutory period for reply. An amendment after final Office Action was filed on August 9, 2010. An Advisory Action mailed on August 23, 2010 informed petitioner the application was not placed in condition for allowance. Accordingly, this application became abandoned on September 9, 2010. A Notice of Abandonment was mailed on January 6, 2011.

The petition satisfies the requirements of 37 CFR 1.137(b) in that petitioner has supplied (1) the reply in the form of a Notice of Appeal (accompanying fee) and a Request for Pre-Appeal Brief Review; (2) the petition fee of $1620; and (3) a proper statement of unintentional delay.

This application is being referred to Technology Center AU 3661 for appropriate action by the Examiner in the normal course of business on the reply received.

Telephone inquiries concerning this decision should be directed to the undersigned at (571) 272-3215.

Charlema Grant
Attorney
Office of Petitions

UNITED STATES PATENT AND TRADEMARK OFFICE

Commissioner for Patents
United States Patent and Trademark Office
P.O. Box 1450
Alexandria, VA 22313-1450
www.uspto.gov

TOWNSEND AND TOWNSEND AND CREW, LLP
TWO EMBARCADERO CENTER
EIGHTH FLOOR
SAN FRANCISCO CA 94111-3834

MAILED
OCT 20 2010
OFFICE OF PETITIONS

In re Application of
David Licata et al.
Application No. 11/265,999
Filed: November 2, 2005
Attorney Docket No. 022037-000400US

ON PETITION

This is a decision on the petition under 37 CFR 1.137(b)[1], filed September 22, 2010, to revive the above-identified application.

The petition is **GRANTED**.

This application became abandoned for failure to timely reply to the Final Office Action mailed February 16, 2010 which set a three (3) month shortened statutory period for reply. No extensions of time under 37 CFR 1.136(a) were obtained. Accordingly, a Notice of Abandonment was mailed August 24, 2010.

Petitioner has submitted a Request for Continued Examination (RCE) and an amendment as the submission required under 37 CFR 1.114.

This matter is being referred to Technology Center 3773 for processing of the RCE.

Telephone inquiries related to this decision should be directed to the undersigned Petitions Attorney at (571) 272-3212.

Patricia Faison-Ball
Senior Petitions Attorney
Office of Petitions

---

[1]Effective December 1, 1997, the provisions of 37 CFR 1.137(b) now provide that where the delay in reply was unintentional, a petition may be filed to revive an abandoned application or a lapsed patent pursuant to 37 CFR 1.137(b). A grantable petition filed under the provisions of 37 CFR 1.137(b) must be accompanied by:

(1) the required reply, unless previously filed. In a nonprovisional application abandoned for failure to prosecute, the required reply may be met by the filing of a continuing application. In an application or patent, abandoned or lapsed for failure to pay the issue fee or any portion thereof, the required reply must be the payment of the issue fee or any outstanding balance thereof.

(2) the petition fee as set forth in 37 CFR 1.17(m);

(3) a statement that the entire delay in filing the required reply from the due date for the reply until the filing of a grantable petition pursuant to 37 CFR 1.137(b) was unintentional. The Commissioner may required additional information where there is a question whether the delay was unintentional; and

(4) any terminal disclaimer (and fee as set forth in 37 CFR 1.20(d)) required pursuant to 37 CFR 1.137(c)).

UNITED STATES PATENT AND TRADEMARK OFFICE

Commissioner for Patents
United States Patent and Trademark Office
P.O. Box 1450
Alexandria, VA 22313-1450
www.uspto.gov

SNR DENTON US LLP
P.O. BOX 061080
CHICAGO IL 60606-1080

MAILED
MAR 14 2011
OFFICE OF PETITIONS

In re Application of	:	
IMURA	:	
Application No. 11/266,148	:	DECISION ON PETITION
Filed: November 3, 2005	:	
Attorney Docket No. 70026880-0055	:	

This is a decision on the petition filed January 7, 2011, which is being treated under 37 CFR 1.181 (no fee) requesting withdrawal of the holding of abandonment in the above-identified application.

The petition is **GRANTED**.

This application was held abandoned for failure to timely pay the issue and publication fees as required by the Notice of Allowance and Fee(s) Due, mailed January 29, 2010, which set a statutory period for reply of three (3) months. Accordingly, the application became abandoned on April 30, 2010. A Notice of Abandonment was mailed December 28, 2010.

A review of the Office record confirms that the issue and publication fees accompanied the petition to withdraw from issue received in the Office on April 29, 2010.

In view of the above, the Notice of Abandonment is hereby vacated and the holding of abandonment withdrawn.

Accordingly, the petition fee of $810 is not required and will be refunded by Treasury Check within the normal course of business.

Telephone inquiries concerning this decision should be directed to Diane Goodwyn at (571) 272-6735.

This application is being referred to the Office of Data Management for processing into a patent.

Thurman K. Page
Petitions Examiner
Office of Petitions

cc: MARCELLUS A. CHASE
1010 GRAND BLVD., STE 500
KANSAS CITY, MO 64106-2220

UNITED STATES PATENT AND TRADEMARK OFFICE

Commissioner for Patents
United States Patent and Trademark Office
P.O. Box 1450
Alexandria, VA 22313-1450
www.uspto.gov

SNR DENTON US LLP
P.O. BOX 061080
CHICAGO IL 60606-1080

MAILED
MAR 28 2011
OFFICE OF PETITIONS

In re Application of	:	
IMURA	:	**CORRECTED**
Application No. 11/266,148	:	DECISION ON PETITION
Filed: November 3, 2005	:	
Attorney Docket No. 70026880-055	:	

This is a decision on the petition under the unintentional provisions of 37 CFR 1.137(b), filed January 7, 2011, to revive the above-identified application and the supplemental request filed March 22, 2011.

The petition is **GRANTED**.

The application became abandoned for failure to timely pay the issue fee on or before December 13, 2010, as required by the Notice of Allowance and Fee(s) Due, mailed September 13, 2010, which set a statutory period for reply of three (3) months. Accordingly, the application became abandoned on December 14, 2010.

The petition satisfies the requirements of 37 CFR 1.137(b) in that petitioner has supplied (1) the reply in the form of payment of the issue fee of $755; (2) the petition fee of $810; and (3) a proper statement of unintentional delay.

There is no indication that the person signing the petition was ever given a power of attorney to prosecute the application. If the person signing the petition desires to receive future correspondence regarding this application, the appropriate power of attorney document must be submitted. While a courtesy copy of this decision is being mailed to the person signing the petition, all future correspondence will be directed to the address currently of record until appropriate instructions are received.

Telephone inquiries concerning this decision should be directed to the undersigned at (571) 272-6735.

The application is being referred to the Office of Data Management for processing into a patent.

/Diane C. Goodwyn/
Diane C. Goodwyn
Petitions Examiner
Office of Petitions

SPE RESPONSE FOR CERTIFICATE OF CORRECTION

Paper No.: _____

DATE : 3/19/11

TO SPE OF : ART UNIT 1733

SUBJECT : Request for Certificate of Correction for Appl. No.: 11266265 Patent No.: 7727463

CofC mailroom date: 03/08/11

Please respond to this request for a certificate of correction within 7 days.

FOR IFW FILES:

Please review the requested changes/corrections as shown in the **COCIN** document(s) in the IFW application image. No new matter should be introduced, nor should the scope or meaning of the claims be changed.

Please complete the response (see below) and forward the completed response to scanning using document code **COCX**.

FOR PAPER FILES:

Please review the requested changes/corrections as shown in the attached certificate of correction. Please complete this form (see below) and forward it with the file to:

Certificates of Correction Branch (CofC)
Randolph Square – 9D10-A
Palm Location 7580
You can fax the Directors/SPE response to 571-270-9990

Lamonte Newsome

Certificates of Correction Branch

571-272-3421

Thank You For Your Assistance

The request for issuing the above-identified correction(s) is hereby:
Note your decision on the appropriate box.

- [X] **Approved** — **All** changes apply.
- [ ] **Approved in Part** — Specify below which changes **do not** apply.
- [ ] **Denied** — State the reasons for denial below.

Comments: _____

_____

_____

SPE RESPONSE FOR CERTIFICATE OF CORRECTION

/Roy King/SPE, 1733

SPE Art Unit

SPE RESPONSE FOR CERTIFICATE OF CORRECTION

Paper No.: _____

DATE : December 17, 2010

TO SPE OF : ART UNIT 2895

SUBJECT : Request for Certificate of Correction for Appl. No. 11266303 Patent No.: 7282276

Please respond to this request for a certificate of correction within 7 days.

FOR IFW FILES:

Please review the requested changes/corrections as shown in the **COCIN** document(s) in the IFW application image. No new matter should be introduced, nor should the scope or meaning of the claims be changed.

Please complete the response (see below) and forward the completed response to scanning using document code **COCX**.

FOR PAPER FILES:

Please review the requested changes/corrections as shown in the attached certificate of correction. Please complete this form (see below) and forward it with the file to:

Certificates of Correction Branch (CofC)
Randolph Square – 9D40-C
Palm Location 7580

_____
Certificates of Correction Branch
703-756-1573

Thank You For Your Assistance

The request for issuing the above-identified correction(s) is hereby:
Note your decision on the appropriate box.

- ➢ **Approved** — **All** changes apply.
- ❑ **Approved in Part** — Specify below which changes **do not** apply.
- ❑ **Denied** — State the reasons for denial below.

Comments: Inserting on the title page o f the patent:

--(30) Foreign Application Priority Data

Nov. 8, 2004 (JP).....2004-323716 --

Approved
/Matthew Smith/
SPE, AU 2823

SPE RESPONSE FOR CERTIFICATE OF CORRECTION

/Matthew S. Smith/ SPE
Art Unit 2823

UNITED STATES PATENT AND TRADEMARK OFFICE

Commissioner for Patents
United States Patent and Trademark Office
P.O. Box 1450
Alexandria, VA 22313-1450
www.uspto.gov

MH2 TECHNOLOGY LAW GROUP, LLP
1951 KIDWELL DRIVE
SUITE 550
TYSONS CORNER, VA 22182

MAILED

AUG 11 2010

OFFICE OF PETITIONS

In re Application of
San jay Kanodia
Application No. 11/266,384
Filed: November 4, 2005
Attorney Docket No. PER-102

DECISION ON PETITION

This is a decision on the petition under the unintentional provisions of 37 CFR 1.137(b), filed July 7, 2010, to revive the above-identified application.

The application became abandoned for failure to reply in a timely manner to the non-final Office action mailed, April 25, 2008, which set a shortened statutory period for reply of three (3) months. No extensions of time under the provisions of 37 CFR 1.136(a) were obtained. Accordingly, the application became abandoned on July 26, 2008.

The petition satisfies the requirements of 37 CFR 1.137(b) in that petitioner has supplied (1) the reply in the form of an amendment, (2) the petition fee of $810, and (3) a proper statement of unintentional delay.

In view of the above, the petition is **GRANTED**.

It is not apparent whether the statement of unintentional delay was signed by a person who would have been in a position of knowing that the entire delay in filing the required reply from the due date for the reply until the filing of a grantable petition pursuant to 37 CFR 1.137(b) was unintentional. Nevertheless, in accordance with 37 CFR 10.18, the statement is accepted as constituting a certification of unintentional delay. However, in the event that petitioner has no knowledge that the delay was unintentional, petitioner must make such an inquiry to ascertain that, in fact, the delay was unintentional. If petitioner discovers that the delay was intentional, petitioner must so notify the Office.

Telephone inquiries concerning this decision should be directed to undersigned at (571) 272-1642. All other inquiries concerning the examination or status of this application should be directed to the Technology Center.

This application is being referred to Technology Center AU 2115 for appropriate action by the Examiner in the normal course of business on the reply received July 7, 2010.

April M. Wise
Petitions Examiner
Office of Petitions

SPE RESPONSE FOR CERTIFICATE OF CORRECTION

Paper No.:20110519

DATE : May 19, 2011

TO SPE OF : ART UNIT 1645

SUBJECT : Request for Certificate of Correction on Patent No.: 7605236

A response is requested with respect to the accompanying request for a certificate of correction.

Please complete this form and return with file, within **7** days to:
Certificates of Correction Branch - ST (South Tower) 9A22
Palm location **7590** - Tel. No. (703) 305-8309

With respect to the change(s) requested, correcting Office and/or Applicant's errors, should the patent read as shown in the certificate of correction? No new matter should be introduced, nor should the scope or meaning of the claims be changed.

Thank You For Your Assistance **Certificates of Correction Branch**

The request for issuing the above-identified correction(s) is hereby:

Note your decision on the appropriated box.

☒ **Approved** All changes apply.

☐ **Approved in Part** Specify below which changes **do not** apply.

☐ **Denied** State the reasons for denial below.

Comments:

/GARY NICKOL/
Supervisory Patent Examiner.Art Unit 1645

UNITED STATES PATENT AND TRADEMARK OFFICE

Commissioner for Patents
United States Patent and Trademark Office
P.O. Box 1450
Alexandria, VA 22313-1450
www.uspto.gov

Date Mailed : November 30, 2011

Patent No. :8032079
Inventor :Philip Schneider, et al.
Patent Issued :October 4, 2011
Title :HEARING SYSTEM, HEARING DEVICE AND METHOD OF OPERATING AND
:METHOD OF MAINTAINING A HEARING DEVICE

Re: Request for Certificate of Correction

Consideration has been given your request for the issuance of a certificate of correction for the above-identified patent under the provisions of Rule(s) 1.322.

Inspection of the application for the patent reveals that in connection with the alleged error pertaining to the specification, column 7, the requested correction is unwarranted. Accordingly, the Letters Patent with regard to applicants request is considered printed in accordance with the records within the Patent and Trademark Office.

In view of the foregoing applicants request in this matter is hereby denied. Any telephone inquiry concerning This communication should be directed to Ms. A. Green at (571) 272-9005.

Mary Diggs, Supervisor
Decisions & Certificates
of Correction Branch
(703) 756-1580 or (571) 272-9005

PEARNE & GORDON LLP
1801 East 9th Street, Ste 1200
Cleveland, OH 44114

/arg

UNITED STATES PATENT AND TRADEMARK OFFICE

Commissioner for Patents
United States Patent and Trademark Office
P.O. Box 1450
Alexandria, VA 22313-1450
www.uspto.gov

MAILED
SEP 12 2011
OFFICE OF PETITIONS

HARNESS, DICKEY & PIERCE, PLLC
P.O. BOX 828
BLOOMNFIELD HILLS MI 48303

In re Patent No. 7,867,772	:	
Issue Date: January 11, 2011	:	
Application No. 11/266,660	:	NOTICE
Filed: November 3, 2005	:	
Attorney Docket No. 15977-000007	:	

This is a notice regarding your request for acceptance of a fee deficiency submission under 37 CFR 1.28 on August 5, 2011.

The Office no longer investigates or rejects original or reissue patent under 37 CFR 1.56. **1098 Off. Gaz. Pat. Office 502 (January 3, 1989)**. Therefore, nothing in this Notice is intended to imply that an investigation was done.

Your fee deficiency submission under 37 CFR 1.28 is hereby **ACCEPTED**.

This application is no longer entitled to small entity status. Accordingly, all future fees paid in this application must be paid at the large entity rate.

There is no indication that the person signing the request was ever given a power of attorney to prosecute the application. If the person signing the request desires to receive future correspondence regarding this patent, the appropriate power of attorney documents must be submitted. While a courtesy copy of this decision is being mailed to the person signing the request, all future correspondence will be directed to the address currently of record until appropriate instructions are received.

Inquiries related to this communication should be directed to the undersigned at (571) 272-3208.

/KOC/
Karen Creasy
Petitions Examiner
Office of Petitions

Cc:

KUSNER & JAFFE
HIGHLAND PLACE – SUITE 310
6151 WILSON MILLS ROAD
HIGHLAND HEIGHTS, OH 44142

UNITED STATES PATENT AND TRADEMARK OFFICE

Commissioner for Patents
United States Patent and Trademark Office
P.O. Box 1450

MAILED
MAR 17 2011
OFFICE OF PETITIONS

MCHALE & SLAVIN, P.A.
2855 PGA BLVD
PALM BEACH GARDENS FL 33410

In re Application of	:	
Peter CORDANI et al.	:	DECISION GRANTING PETITION
Application No. 11/266,690	:	UNDER 37 CFR 1.137(b)
Filed: November 3, 2005	:	
Atty. Docket No.: 1403.028	:	

This is a decision on the petition under 37 CFR 1.137(b), filed January 21, 2011, to revive the above-identified application.

The petition is **GRANTED**.

The application became abandoned for failure to reply within the meaning of 37 CFR 1.113 in a timely manner to the final Office action mailed October 5, 2009, which set a shortened statutory reply period of three (3) months. No extensions of time under the provisions of 37 CFR 1.136(a) were obtained. The application thus became abandoned on January 6, 2010, with notification mailed April 13, 2010.

The petition satisfies the conditions for revival pursuant to 37 CFR 1.137(b) by including (1) a reply in the form of a Request for Continued Examination (RCE) and fee, and submission required by 37 CFR 1.114, (2) a petition fee of $810, and (3) a proper statement of unintentional delay. The reply to the final Office action is accepted as having been unintentionally delayed.

Telephone inquiries relating to this decision should be directed to Robert DeWitty, Petitions Examiner, Office of Petitions (571-272-8427).

The application file will be referred to Technology Center Art Unit 1772 for further action on the filed Response.

Ramesh Krishnamurthy
for David Bucci
Petitions Examiner
Office of Petitions

UNITED STATES PATENT AND TRADEMARK OFFICE

Commissioner for Patents
United States Patent and Trademark Office
P.O. Box 1450
Alexandria, VA 22313-1450
www.uspto.gov

Paper No.

PARTNERS HEALTHCARE
RESEARCH AND LICENSING DEPARTMENT
101 HUNTINGTON AVENUE 4TH FLOOR
BOSTON MA 02199

MAILED
AUG 12 2010
OFFICE OF PETITIONS

In re Patent No. 7595159	:	DECISION ON REQUEST
Scherzer et al.	:	FOR
Issue Date: 09/29/2009	:	RECONSIDERATION OF
Application No. 11/266,774	:	PATENT TERM ADJUSTMENT
Filed: 11/03/2005	:	and
Atty Docket No.	:	NOTICE OF INTENT TO ISSUE
PART:010US/105118745	:	CERTIFICATE OF CORRECTION

This is a decision on the petition filed on May 19, 2010, which is being treated as a request for reconsideration under 37 CFR 1.705(d) requesting that the patent term adjustment indicated on the above-identified patent be corrected to indicate that the term of the above-identified patent is extended or adjusted, by five hundred ninety-one (591) days. For the reasons stated below, the petition is treated as a petition requesting that the patent term adjustment indicated on the above-identified patent be corrected to indicate that the term of the above-identified patent is extended or adjusted, by five hundred sixty (560) days.

The petition to correct the patent term adjustment indicated on the above-identified patent to indicate that the term of the above-identified patent is extended or adjusted by five hundred sixty (560) days is **GRANTED to the extent indicated herein.**

As to the "B" delay, the period is the period beginning on November 4, 2008, the day after the date that is three years after the date on which the application was filed under 35 U.S.C. 111(a) and ending on September 29, 2009, the date the application issued as a patent, or 330 days. See, 35 U.S.C. 154(b)(1)(C)(iii). Any time consumed by appellate review, however, is not included in the calculation of 37 CFR 1.702(b). See 35 U.S.C. 154(b)(1)(B)(ii). On June 30, 2009, a notice of

appeal was filed. On July 30, 2009, 31 days after the date the notice of appeal was filed, a notice of allowance was mailed. Accordingly, the excluded period for appeal is 31 days, and the "B" delay period is 299 (330 - 31) days.

The patent term adjustment at the time of issuance of the patent is 560 (373 days of Office delay + 299 days of over three years delay - 112 days of applicant delay) days.

The Office will *sua sponte* issue a certificate of correction. Pursuant to 37 CFR 1.322, the Office will not issue a certificate of correction without first providing assignee or patentee an opportunity to be heard. Accordingly, patentees are given **one (1) month or thirty (30) days**, whichever is longer, from the mail date of this decision to respond. No extensions of time will be granted under § 1.136. See 37 CFR 1.323(a)(4).

No fee is required to be filed with the subject request for reconsideration. The $200.00 fee submitted with the petition will be credited to counsel.

Nothing in this decision shall be construed as a waiver of the requirement of 35 U.S.C. 154(b)(4) that any civil action by an applicant dissatisfied with a determination made by the Director under 35 U.S.C. 154(b)(3) be filed in the United States District Court for the District of Columbia within 180 days after the grant of the patent.

The application is being forwarded to the Certificates of Correction Branch for issuance of a certificate of correction. The Office will issue a certificate of correction indicating that the term of the above-identified patent is extended or adjusted by five hundred sixty **(560)** days.

Telephone inquiries specific to this matter should be directed to the undersigned at (571) 272-3231.

DWood

Douglas I. Wood
Senior Petitions Attorney
Office of Petitions

Enclosure: Copy of DRAFT Certificate of Correction

UNITED STATES PATENT AND TRADEMARK OFFICE

CERTIFICATE OF CORRECTION

PATENT : 7,595,159 B2

DATED : **Sep. 29, 2009** **DRAFT**

INVENTOR(S) : Scherzer et al.

It is certified that error appears in the above-identified patent and that said Letters Patent is hereby corrected as shown below:

On the cover page,

[*] Notice: Subject to any disclaimer, the term of this patent is extended or adjusted under 35 USC 154(b) by 261 days.

Delete the phrase "by 261 days" and insert – by 560 days--

UNITED STATES PATENT AND TRADEMARK OFFICE

Commissioner for Patents
United States Patent and Trademark Office
P.O. Box 1450
Alexandria, VA 22313-1450
www.uspto.gov

NOVO NORDISK, INC.
INTELLECTUAL PROPERTY DEPARTMENT
100 COLLEGE ROAD WEST
PRINCETON NJ 08540

MAILED
SEP 21 2010
OFFICE OF PETITIONS

In re Patent No. 7,628,770	:
Ethelfeld	: DECISION ON REQUEST FOR
Issue Date: December 8, 2009	: RECONSIDERATION OF
Application No. 11/266,821	: PATENT TERM ADJUSTMENT
Filed: November 4, 2005	: AND NOTICE OF INTENT
Attorney Docket No. 6639.204-US	: TO ISSUE CERTIFICATE OF
Title: PIVOTABLE NEEDLE UNIT	: CORRECTION

This is a decision on the petition filed on February 5, 2010, which is being treated as a petition under 37 CFR 1.705(d) requesting that the patent term adjustment indicated on the above-identified patent be corrected to indicate that the term of the above-identified patent is extended or adjusted by four hundred fifteen (415) days. Patentee also disputes the 42-day reduction.

The petition to correct the patent term adjustment indicated on the above-identified patent is **GRANTED TO THE EXTENT INDICATED HEREIN.**

Patentee disputes the 42 day reduction taken for the submission of the Request for Foreign Priority. Petitioner contends the reductions pursuant to 37 CFR 1.704(c)(10) total 26 days of which 10 days overlap.

Patentee's arguments has been considered and determined to be convincing to the extent that the 42 day reduction is not warranted.

37 CFR 1.704(c) provides that:

> Circumstances that constitute a failure of the applicant to engage in reasonable efforts to conclude processing or

examination of an application also include the following circumstances, which will result in the following reduction of the period of adjustment set forth in § 1.703 to the extent that the periods are not overlapping:

37 CFR 1.704 (c)(10) provides:

(10) Submission of an amendment under § 1.312 or other paper after a notice of allowance has been given or mailed, in which case the period of adjustment set forth in § 1.703 shall be reduced by the lesser of:

i) The number of days, if any, beginning on the date the amendment under § 1.312 or other paper was filed and ending on the mailing date of the Office action or notice in response to the amendment under § 1.312 or such other paper;

or

(ii) Four months;

A review of the record shows that there were three instances which require reductions pursuant to 37 CFR 1.704(c)(10). The first instance warrants a 12 day reduction for the submission of the request for a corrected filing receipt submitted on September 25, 2009 after the mailing of the Notice of Allowance. The 12 day period is calculated beginning on September 25, 2009 and ending on October 6, 2009, the date the Notice in response to the request was mailed. A second reduction of 11 days is warranted for the submission of the certified copy of the foreign priority document submitted on October 13, 2009. The 11 day period is calculated beginning on October 13, 2009 and ending on October 23, 2009, the date the Notice acknowledging priority was mailed. A third reduction pursuant to 37 CFR 1.704(c)(10) of 15 days for the submission of the 312 amendment on October 14, 2009. The reduction is calculated beginning October 14, 2009 and ending on October 28, 2009, the date the Notice in response to the amendment was mailed. It is noted that there is a 10 day overlap of applicant delay from October 14, 2009 until October 23, 2009. As such the total reductions pursuant to 37 CFR 1.704(c)(10) is 28 (12 + 15 + 11 - 10) days. The 42 day reduction will be removed.

Patentee's delay total 59 days (31 + 12 + 11 + 15 - 10).

The patent is entitled under 37 CFR 1.702(a) to 449 days. The period of adjustment to which the patent is entitled under 37 CFR 1.702(b) is 13 days. As the period from the filing date of the request for continued examination (RCE) to the issue date of the patent is not included in the "B" delay period, the over three year period begins on November 5, 2008 and ends on November 17, 2008, the day before the RCE was filed, and is 13 days. See 35 U.S.C. 154(b)(1)(B)(i). There are zero days of overlap between 37 CFR 1.702(a) and 37 CFR 1.702(b).

As such the total number of days the period of adjustment under 37 CFR 1.702(a) and (b) must be reduced due to applicants' delay which totals 59 days.

In view thereof, the patent is entitled to an overall adjustment of 403 days (449 days under 37 CFR 1.702(a) + 13 days under 37 CFR 1.702(b) - 0 overlapping days - 59 days of applicant delay).

The application is being forwarded to the Certificates of Branch for issuance of a certificate of correction. The Office will issue a certificate of correction indicating that the term of the above-identified patent is extended or adjusted by **four hundred three (403)** days.

The Office will *sua sponte* issue a certificate of correction. Pursuant to 37 CFR 1.322, the Office will not issue a certificate of correction without first providing assignee or patentee an opportunity to be heard. Accordingly, patentees are given **one (1) month or thirty (30) days**, whichever is longer, from the mail date of this decision to respond. No extensions of time will be granted under § 1.136.

Nothing in this decision shall be construed as a waiver of the requirement of 35 U.S.C. 154(b)(4) that any civil action by an applicant dissatisfied with a determination made by the Director under 35 U.S.C. 154(b)(3) be filed in the United States District Court for the District of Columbia within 180 days after the grant of the patent.

The Office acknowledges submission of the $200.00 fee set forth in 37 CFR 1.18(e). No additional fees are required.

Telephone inquiries specific to this matter should be directed to Petitions Attorney, Charlema Grant at (571) 272-3215.

Anthony Knight
Director
Office of Petitions

Enclosure: Copy of DRAFT Certificate of Correction

UNITED STATES PATENT AND TRADEMARK OFFICE

CERTIFICATE OF CORRECTION

PATENT : 7,628,770 B2

DATED : December 8, 2009 **DRAFT**

INVENTOR(S) : Ethelfeld

It is certified that error appears in the above-identified patent and that said Letters Patent is hereby corrected as shown below:

On the cover page,

[*] Notice: Subject to any disclaimer, the term of this patent is extended or adjusted under 35 USC 154(b) by 361 days

Delete the phrase "by 361 days" and insert – by 403 days--

UNITED STATES PATENT AND TRADEMARK OFFICE

Commissioner for Patents
United States Patent and Trademark Office
P.O. Box 1450
Alexandria, VA 22313-1450
www.uspto.gov

MICHAEL E. MARTIN
GARDERE WYNNE SEWELL LLP, IP SECTION
3000 THANKSGIVING TOWER
SUITE 3000,1601 ELM STREET
DALLAS TX 75201

MAILED
JAN 17 2012
OFFICE OF PETITIONS

In re Patent No. 7,377,338
Issue Date: May 27, 2008
Application No. 11/266,968
Filed: November 4, 2005
Attorney Docket No. 130671-1000

NOTICE

This is a notice regarding your request for acceptance of a fee deficiency submission under 37 CFR 1.28 filed December 13, 2011.

The petition is **DISMISSED**.

Any request for reconsideration of this request must be submitted within TWO (2) MONTHS from the mail date of this decision. Extensions of time under 37 CFR 1.136(a) are not permitted.

The request has **not** been reviewed on the merits because the petition has not been properly signed.

In this regard, petitioner's attention is directed to 37 CFR 1.33(b), which states.

> (b) Amendments and other papers. Amendments and other papers, except for written assertions pursuant to § 1.27(c)(2)(ii) of this part, filed in the application must be signed by:
> (1) A registered patent attorney or patent agent of record appointed in compliance with § 1.32(b);
> (2) A registered patent attorney or patent agent not of record who acts in a representative capacity under the provisions of § 1.34;
> (3) An assignee as provided for under §3.71(b) of this chapter; or
> (4) All of the applicants (§ 1.41(b)) for patent, unless there is an assignee of the entire interest and such assignee has taken action in the application in accordance with § 3.71 of this chapter.

Although an assignment has been recorded in the Office showing that Renegade Drilling Tools, LLC. is the assignee of record, a review of the record shows that a statement pursuant to 37 CFR 3.73 (b) as required by 37 CFR 3.71 has not been provided.

Further correspondence with respect to this matter should be addressed as follows:

By mail: Mail Stop PETITIONS
Commissioner for Patents
Post Office Box 1450
Alexandria, VA 22313-1450

By hand: Customer Service Window
Mail Stop Petitions
Randolph Building
401 Dulany Street
Alexandria, VA 22314

By fax: (571) 273-8300
ATTN: Office of Petitions

Inquiries related to this communication should be directed to the undersigned at (571) 272-3215.

Charlema Grant
Petitions Attorney
Office of Petitions

Enclosure: Statement under 37 CFR 3.73(b)

Cc: Renegade drilling Tools LLC
2401 Bridle Path
Austin, Texas 78703

UNITED STATES PATENT AND TRADEMARK OFFICE

Commissioner for Patents
United States Patent and Trademark Office
P.O. Box 1450
Alexandria, VA 22313-1450
www.uspto.gov

MAILED
MAR 28 2011
OFFICE OF PETITIONS

SENNIGER POWERS LLP (MTC)
100 NORTH BROADWAY
17TH FLOOR
ST LOUIS MO 63102

In re Patent of Heise et al.	:	ON APPLICATION FOR
Patent No. 7,902,388	:	PATENT TERM ADJUSTMENT
Issue Date: March 8, 2011	:	AND NOTICE OF INTENT TO
Application No. 11/266,983	:	ISSUE CERTIFICATE OF
Filed: November 4, 2005	:	CORRECTION
Attorney Docket No. MTC 6921.301	:	
35-21/53354D		

This is in response to the "REQUEST FOR RECONSIDERATION OF THE PATENT TERM ADJUSTMENT PURSUANT TO 37 C.F.R. 1.705," filed January 31, 2011. The petition was timely filed under 37 CFR § 1.705(b). However, it is noted that the application matured into Patent No. 7,902,388 on March 8, 2011. As a result, the Office will issue a certificate of correction to address patentees' concern.

Patentees request the determination of patent term adjustment indicated on the patent be reviewed because the Office erroneously entered a 116 day reduction, pursuant to 37 CFR 1.704(c)(7), in connection with the re-filing of an election on January 23, 2009.

The request for review of the patent term adjustment is **GRANTED to the extent indicated herein.**

The patent term adjustment indicated in the patent is to be corrected by issuance of a certificate of correction showing a revised Patent Term Adjustment of one thousand one hundred eighty-eight (1188) days.

On March 8, 2011, the above-identified application matured into U.S. Patent No. 7,902,388 with a revised patent term adjustment of 1035 days.

Patentees assert the patent term adjustment indicated in the patent is incorrect and should be recalculated because no reduction should be charged in connection with the re-filing of an election on January 23, 2009. The Office concurs.

On July 28, 2008, the Office mailed a Restriction Requirement. On September 29, 2008, applicants filed a three page response, which included an election. On December 26, 2008, the Office mailed an Office action informing applicants that the September 29, 2008 reply was not fully responsive because applicants neglected to elect a group for examination. On January 23, 2009, applicants filed a copy of the election that had been previously filed on September 29, 2008.

A review of the September 29, 2008 filing reveals that it did include an election. Thus, the September 29, 2008 filing was fully responsive. No reduction pursuant to 37 CFR 1.704(c)(7) should be assessed for the re-filing of the reply on January 23, 2009. Accordingly, the 116 day period of reduction is being removed.

A review of the PTA calculations for the application reveals another error. Applicants were improperly charged with a 37 day reduction, pursuant to 37 CFR 1.704(c)(10), for filing a "miscellaneous incoming letter" on January 31, 2011 after a Notice fo allowance was mailed on November 3, 2010. A review of the document filed reveals it is a patent term adjustment petition. Per 37 CFR 1.704(e), the submission of an application for patent term adjustment under § 1.705(b) (with or without request under § 1.705(c) for reinstatement of reduced patent term adjustment) will not be considered a failure to engage in reasonable efforts to conclude prosecution (processing or examination) of the application under paragraph (c)(10) of this section. Accordingly, the 37 day period of reduction is being removed.

Accordingly, the patent term adjustment indicated in the patent is to be corrected by issuance of a certificate of correction showing a revised Patent Term Adjustment of **one thousand one hundred eighty-eight (1188) days**, which is 572 days of A delay + 685 days of B delay - 69 days of Applicant Delay.

The Office will *sua sponte* issue a certificate of correction. Pursuant to 37 CFR 1.322, the Office will not issue a certificate of correction without first providing assignee or patentee an opportunity to be heard. Accordingly, patentees are given **one (1) month or thirty (30) days**, whichever is longer,

from the mail date of this decision to respond. No extensions of time will be granted under § 1.136.

Nothing in this decision shall be construed as a waiver of the requirement of 35 U.S.C. 154(b)(4) that any civil action by an applicant dissatisfied with a determination made by the Director under 35 U.S.C. 154(b)(3) be filed in the United States District Court for the District of Columbia within 180 days after the grant of the patent.

Pursuant to applicants' authorization, deposit account no. 19-1345 will be charged the $200.00 fee under 37 CFR 1.18(e).

The application file is being forwarded to the Certificates of Correction Branch for issuance of a certificate of correction in order to rectify this error. The Office will issue a certificate of correction indicating that the term of the above-identified patent is extended or adjusted by **one thousand one hundred eight-eight (1188)** days.

Telephone inquiries specific to this decision should be directed to the undersigned at (571) 272-3230.

Shirene Willis Brantley

Shirene Willis Brantley
Senior Petitions Attorney
Office of Petitions

Enclosure: Copy of DRAFT Certificate of Correction

UNITED STATES PATENT AND TRADEMARK OFFICE

CERTIFICATE OF CORRECTION

PATENT : 7,902,388 B2

DATED : **March 8, 2011** **DRAFT**

INVENTOR(S) : Heise et al.

It is certified that error appears in the above-identified patent and that said Letters Patent is hereby corrected as shown below:

On the cover page,

[*] Notice: Subject to any disclaimer, the term of this patent is extended or adjusted under 35 U.S.C. 154(b) by 1035 days

Delete the phrase "by 1035 days" and insert – by 1188 days--

UNITED STATES PATENT AND TRADEMARK OFFICE

Commissioner for Patents
United States Patent and Trademark Office
P.O. Box 1450
Alexandria, VA 22313-1450
www.uspto.gov

FOLEY & LARDNER LLP
321 NORTH CLARK STREET
SUITE 2800
CHICAGO IL 60654-5313

MAILED

AUG 24 2010

OFFICE OF PETITIONS

In re Patent No. 7,176,445	:	
Issue Date: February 13, 2007	:	
Application No. 11/266,989	:	ON PETITION
Filed: November 4, 2005	:	
Attorney Docket No. 040563-0211	:	

This is a notice regarding your request for acceptance of a fee deficiency submission under 37 CFR 1.28. On September 1, 1998, the Court of Appeals for the Federal Circuit held that 37 CFR 1.28(c) is the sole provision governing the time for correction of the erroneous payment of the issue fee as a small entity. **See DH Technology v. Synergystex International, Inc. 154 F.3d 1333, 47 USPQ2d 1865 (Fed. Cir. Sept. 1, 1998).**

The Office no longer investigates or rejects original or reissue applications under 37 CFR 1.56. **1098 Off. Gaz. Pat. Office 502 (January 3, 1989)**. Therefore, nothing in this Notice is intended to imply that an investigation was done.

Your fee deficiency submission under 37 CFR 1.28 is hereby **ACCEPTED**.

This patent is no longer entitled to small entity status. Accordingly, all future fees paid in this patent must be paid at the large entity rate.

Telephone inquiries concerning this decision should be directed to the undersigned at (571) 272-7751.

Joan Olszewski

Joan Olszewski
Petitions Examiner
Office of Petitions

PTO/SB/131 (01-10)
Approved for use through 02/28/2011. OMB 0651-0020
U.S. Patent and Trademark Office; U. S. DEPARTMENT OF COMMERCE
Under the Paperwork Reduction Act of 1995, no persons are required to respond to a collection of information unless it displays a valid OMB control number.

REQUEST FOR RECALCULATION OF PATENT TERM ADJUSTMENT IN VIEW OF *WYETH**

Attorney Docket Number: TGXX-1032US	Patent Number: 7662082
Filing Date (or 371(b) or (f) Date): 11/04/2005	Issue Date: 2/16/2010
First Named Inventor: Jack C. White	
Title: EXAPNDABLE BRACHYTHERAPY DEVICE	

PATENTEE HEREBY REQUESTS RECALCULATION OF THE PATENT TERM ADJUSTMENT (PTA) UNDER 35 USC 154(b) INDICATED ON THE ABOVE-IDENTIFIED PATENT. THE PATENTEE'S SOLE BASIS FOR REQUESTING THE RECALCULATION IS THE USPTO'S PRE-*WYETH* INTERPRETATION OF 35 U.S.C. 154(b)(2)(A).

Note: This form is only for requesting a recalculation of PTA for patents issued before March 2, 2010, if the sole basis for requesting the recalculation is the USPTO's pre-*Wyeth* interpretation of 35 U.S.C. 154(b)(2)(A). See Instruction Sheet on page 2 for more information.

Patentees are reminded that to preserve the right to review in the United States District Court for the District of Columbia of the USPTO's patent term adjustment determination, a patentee must ensure that he or she also takes the steps required under 35 U.S.C. 154(b)(3) and (b)(4) and 37 CFR 1.705 in a timely manner.

**Wyeth v. Kappos*, No. 2009-1120 (Fed. Cir., Jan. 7, 2010).

Signature /Kevin J. Dunleavy/	Date 08-03-2010
Name (Print/Typed) Kevni J. Dunleavy	Registration Number 32024

***Note**: Signatures of all the inventors or assignees of record of the entire interest or their representative(s) are required in accordance with 37 CFR 1.33 and 11.18. Please see 37 CFR 1.4(d) for the form of the signature. If necessary, submit multiple forms for more than one signature, see below**.*

✔ *Total of 1 forms are submitted.

The information is required to obtain or retain a benefit by the public which is to file (and by the USPTO to process) an application. Confidentiality is governed by 35 U.S.C. 122 and 37 CFR 1.11 and 1.14. This collection is estimated to take 12 hours to complete, including gathering, preparing, and submitting the completed application form to the USPTO. Time will vary depending upon the individual case. Any comments on the amount of time you require to complete this form and/or suggestions for reducing this burden, should be sent to the Chief Information Officer, U.S. Patent and Trademark Office, U.S. Department of Commerce, P.O. Box 1450, Alexandria, VA 22313-1450. DO NOT SEND FEES OR COMPLETED FORMS TO THIS ADDRESS. **SEND TO: Commissioner for Patents, P.O. Box 1450, Alexandria, VA 22313-1450.**

If you need assistance in completing the form, call 1-800-PTO-9199 and select option 2.

PTO/SB/131 (01-10)
Approved for use through 02/28/2011. OMB 0651-0020
U.S. Patent and Trademark Office; U. S. DEPARTMENT OF COMMERCE
Under the Paperwork Reduction Act of 1995, no persons are required to respond to a collection of information unless it displays a valid OMB control number.

Instruction Sheet for: REQUEST FOR RECALCULATION OF PATENT TERM ADJUSTMENT IN VIEW OF *WYETH**

(Not to be Submitted to the USPTO)

This form is only for requesting a recalculation of PTA for patents issued before March 2, 2010, if the sole basis for requesting the recalculation is the USPTO's pre-*Wyeth* interpretation of 35 U.S.C. 154(b)(2)(A).

This form must be filed within 180 days of the day the patent was granted, with the following exception:

> Patentees who received a decision from the USPTO under the USPTO's pre-Wyeth interpretation of 35 U.S.C. 154(b)(2)(A) may file a request for reconsideration of that decision if such a request for reconsideration is filed within **two months** of the date of the decision (37 CFR 1.181(f)). If the patentee's sole basis for requesting reconsideration of the decision is the USPTO's pre-Wyeth interpretation of 35 U.S.C. 154(b)(2)(A), the request for reconsideration need only state that reconsideration is being requested in view of Wyeth (this form may be used for this purpose if it is filed within **two months** of the date of the decision from the USPTO).

Do not use this form if the application has been allowed, but not yet issued as a patent.

1. **For patents issued before March 2, 2010:** A request for reconsideration under 37 CFR 1.705(d) and the fee set forth in 37 CFR 1.18(e) are not required, provided that the patentee's sole basis for requesting recalculation of the PTA in the patent is the USPTO's pre-*Wyeth* interpretation of 35 U.S.C. 154(b)(2)(A) and this form is filed within 180 days of the day the patent was granted.

2. **For patents issued on or after March 2, 2010 (do not use this form):** Patentees seeking a revised PTA in a patent issued on or after March 2, 2010, must file a request for reconsideration under 37 CFR 1.705(d) that complies with the requirements of 37 CFR 1.705(b)(1) and (b)(2) within two months of the day the patent issued.

For more information, see "Notice Concerning Calculation of the Patent Term Adjustment With Respect to the Overlapping Delay Provision of 35 U.S.C. 154(b)(2)(A)" available on the USPTO Web site at http://www.uspto.gov/patents/law/notices/2010.jsp.

**Wyeth v. Kappos*, No. 2009-1120 (Fed. Cir., Jan. 7, 2010).

Privacy Act Statement

The **Privacy Act of 1974 (P.L. 93-579)** requires that you be given certain information in connection with your submission of the attached form related to a patent application or patent. Accordingly, pursuant to the requirements of the Act, please be advised that: (1) the general authority for the collection of this information is 35 U.S.C. 2(b)(2); (2) furnishing of the information solicited is voluntary; and (3) the principal purpose for which the information is used by the U.S. Patent and Trademark Office is to process and/or examine your submission related to a patent application or patent. If you do not furnish the requested information, the U.S. Patent and Trademark Office may not be able to process and/or examine your submission, which may result in termination of proceedings or abandonment of the application or expiration of the patent.

The information provided by you in this form will be subject to the following routine uses:

1. The information on this form will be treated confidentially to the extent allowed under the Freedom of Information Act (5 U.S.C. 552) and the Privacy Act (5 U.S.C 552a). Records from this system of records may be disclosed to the Department of Justice to determine whether disclosure of these records is required by the Freedom of Information Act.
2. A record from this system of records may be disclosed, as a routine use, in the course of presenting evidence to a court, magistrate, or administrative tribunal, including disclosures to opposing counsel in the course of settlement negotiations.
3. A record in this system of records may be disclosed, as a routine use, to a Member of Congress submitting a request involving an individual, to whom the record pertains, when the individual has requested assistance from the Member with respect to the subject matter of the record.
4. A record in this system of records may be disclosed, as a routine use, to a contractor of the Agency having need for the information in order to perform a contract. Recipients of information shall be required to comply with the requirements of the Privacy Act of 1974, as amended, pursuant to 5 U.S.C. 552a(m).
5. A record related to an International Application filed under the Patent Cooperation Treaty in this system of records may be disclosed, as a routine use, to the International Bureau of the World Intellectual Property Organization, pursuant to the Patent Cooperation Treaty.
6. A record in this system of records may be disclosed, as a routine use, to another federal agency for purposes of National Security review (35 U.S.C. 181) and for review pursuant to the Atomic Energy Act (42 U.S.C. 218(c)).
7. A record from this system of records may be disclosed, as a routine use, to the Administrator, General Services, or his/her designee, during an inspection of records conducted by GSA as part of that agency's responsibility to recommend improvements in records management practices and programs, under authority of 44 U.S.C. 2904 and 2906. Such disclosure shall be made in accordance with the GSA regulations governing inspection of records for this purpose, and any other relevant (*i.e.*, GSA or Commerce) directive. Such disclosure shall not be used to make determinations about individuals.
8. A record from this system of records may be disclosed, as a routine use, to the public after either publication of the application pursuant to 35 U.S.C. 122(b) or issuance of a patent pursuant to 35 U.S.C. 151. Further, a record may be disclosed, subject to the limitations of 37 CFR 1.14, as a routine use, to the public if the record was filed in an application which became abandoned or in which the proceedings were terminated and which application is referenced by either a published application, an application open to public inspection or an issued patent.
9. A record from this system of records may be disclosed, as a routine use, to a Federal, State, or local law enforcement agency, if the USPTO becomes aware of a violation or potential violation of law or regulation.

UNITED STATES PATENT AND TRADEMARK OFFICE

Commissioner for Patents
United States Patent and Trademark Office
P.O. Box 1450
Alexandria, VA 22313-1450
www.uspto.gov

KNOBLE, YOSHIDA & DUNLEAVY
EIGHT PENN CENTER
SUITE 1350
1628 JOHN F KENNEDY BLVD
PHILADELPHIA, PA 19103

MAILED

AUG 23 2010

OFFICE OF PETITIONS

Decision on Petition

In re Patent of White et al. :
Patent No. 7,662,082 :
Issue Date: February 16, 2010 :
Application No. 11/266,994 :
Filing Date: November 4, 2005 :
Attorney Docket No. TGXX-1032US :

This is a decision responding to the "Request for Reconsideration of Dismissal of Request for Recalculation of Patent Term Adjustment in View of Wyeth" filed April 27, 2010, which is being treated as a petition under 37 C.F.R. § 1.181.[1]

The petition is **dismissed**.

The Office mailed an "Issue Notification" on January 27, 2010. The notification indicated the patent would issue on February 16, 2010, and include a patent term adjustment of 268 days.

A "Request for Recalculation of Patent Term Adjustment in View of *Wyeth*" form and a corresponding instruction form were filed February 15, 2010. The instruction form stated in bold, "Do not use form if the application has been allowed, but not yet issued as a patent."

The patent issued February 16, 2010.

The Office issued a decision dismissing the February 15, 2010 request on April 21, 2010.

The instant petition was filed April 27, 2010.

The Office has reviewed the record and determined the April 21, 2010 decision properly dismissed the February 15, 2010 request. Specifically, the February 15, 2010 request was untimely because the request was filed prior to issuance of the patent.

[1] The instant decision is **not** a decision responding to the **timely** "Request for Recalculation of Patent Term Adjustment in View of *Wyeth*" filed August 3, 2010. A decision responding to the August 3, 2010 request will be mailed in due course.

Any request for reconsideration must be submitted within TWO (2) MONTHS from the mail date of this decision. Extensions of time under 37 CFR 1.136(a) are NOT permitted.

Telephone inquiries regarding this communication should be directed to Petitions Attorney Steven Brantley at (571) 272-3203.

Charles Steven Brantley
Senior Petitions Attorney
Office of Petitions

UNITED STATES PATENT AND TRADEMARK OFFICE

UNITED STATES DEPARTMENT OF COMMERCE
United States Patent and Trademark Office
Address: COMMISSIONER FOR PATENTS
P.O. Box 1450
Alexandria, Virginia 22313-1450
www.uspto.gov

KNOBLE, YOSHIDA & DUNLEAVY
EIGHT PENN CENTER
SUITE 1350, 1628 JOHN F KENNEDY BLVD
PHILADELPHIA, PA 19103

Mail Date: 10/12/2011

Applicant	: Jack C. White	: DECISION ON REQUEST FOR
Patent Number	: 7662082	: RECALCULATION of PATENT
Issue Date	: 02/16/2010	: TERM ADJUSTMENT IN VIEW
Application No	: 11/266,994	: OF WYETH AND NOTICE OF INTENT TO
Filed	: 11/04/2005	: ISSUE CERTIFICATE OF CORRECTION
		:

The Request for Recalculation is **GRANTED** to the extent indicated.

The patent term adjustment has been determined to be **452** days. The USPTO will *sua sponte* issue a certificate of correction reflecting the amount of PTA days determined by the recalculation.

Prior to the issuance of the certificate of correction, the USPTO will afford patentee an opportunity to be heard and request reconsideration. Accordingly, patentee has **one month or thirty (30) days**, whichever is longer, to file a request for reconsideration of this patent term adjustment calculation. See 35 U.S.C. 154(b)(3)(B)(ii) and 37 CFR 1.322(a)(4). No extensions of time will be granted under 37 CFR 1.136.

Patentee should use document code PET.OP if electronically filing a request for reconsideration of this patent term adjustment calculation. The patentee must also include the information required by 37 CFR 1.705(b)(2) and the fee required by 37 CFR 1.18(e). If patentee does not file a timely request for reconsideration of this patent term adjustment calculation including the information required by 37 CFR 1.705(b)(2) and the fee required by 37 CFR 1.18(e), the USPTO will issue a certificate of correction reflecting the PTA determination noted above.

Patentee should be aware that in order to preserve the right to review in the United States District Court for the District of Columbia of the USPTO patent term adjustment determination, patentee must ensure that he or she also take the steps required under 35 U.S.C. 154(b)(4)(A) in a timely manner. Nothing in the request for recalculation should be construed as providing an alternative time frame for commencing a civil action under 35 U.S.C. 154(b)(4)(A).

Any questions concerning this decision should be directed to the Office of Patent Legal Administration at 571-272-7702.

UNITED STATES PATENT AND TRADEMARK OFFICE

Commissioner for Patents
United States Patent and Trademark Office
P.O. Box 1450
Alexandria, VA 22313-1450
www.uspto.gov

MAILED

APR 20 2011

OFFICE OF PETITIONS

MINTZ, LEVIN, COHN, FERRIS, GLOVSKY AND POPEO, P.C.
ONE FINANCIAL CENTER
BOSTON, MA 02111

In re Application of	:	
KOPP, et al	:	
Application No. 11/267,029	:	DECISION ON PETITION
Filed: November 4, 2005	:	TO WITHDRAW
Attorney Docket No. 34874-626F01US	:	FROM RECORD
	:	

This is a decision on the Request to Withdraw as attorney or agent of record under 37 C.F.R. § 1.36(b), filed March 4, 2011.

The request is **NOT APPROVED** because it is moot.

A review of the file record indicates that the power of attorney to William S. Galliani and the attorneys associated with Customer No. 23419, has been revoked by the assignee of the patent application on April 7, 2011. Accordingly, the request to withdraw under 37 C.F.R. § 1.36(b) is moot.

All future correspondence from the Office will continued to be forwarded to the above-identified address until other properly notified.

Telephone inquires concerning this decision should be directed to undersigned at (571) 272- 6735.

/Diane C. Goodwyn/
Diane C. Goodwyn
Petitions Examiner
Office of Petitions

cc: WILLIAM S. GALLIANI
777 SIXTH STREET NW, SUITE 1100
WASHINGTON DC 20001

cc: BUSINESS OBJECTS AMERICAS;
BUSINESS OBJECTS S.A.
SAP AMERICA, INC.;
BUSINESS OBJECTS SOFTWARE LTD.
BUSINESS OBJECTS DATA INTEGRATION, INC.
3580 CARMEL MOUNTAIN RD., SUITE 300
SAN DIEGO, CA 92130

UNITED STATES PATENT AND TRADEMARK OFFICE

Commissioner for Patents
United States Patent and Trademark Office
P.O. Box 1450
Alexandria, VA 22313-1450
www.uspto.gov

MAILED

AUG 02 2010

OFFICE OF PETITIONS

STERNE KESSLER GOLDSTEIN & FOX P.L.L.C.
1100 NEW YORK AVENUE, N.W.
WASHINGTON, DC 20005

In re Application of :
David Herr Gardner et al :
Application No. 11/267,179 : ON PETITION
Filed: November 7, 2005 :
Attorney Docket No. 2411.0030001

This is a decision on the petition, filed July 30, 2010 under 37 CFR 1.313(c)(2) to withdraw the above-identified application from issue after payment of the issue fee.

The petition is **GRANTED**.

The above-identified application is withdrawn from issue for consideration of a submission under 37 CFR 1.114 (request for continued examination). See 37 CFR 1.313(c)(2).

Petitioner is advised that the issue fee paid on February 23, 2010 in the above-identified application cannot be refunded. If, however, the above-identified application is again allowed, petitioner may request that it be applied towards the issue fee required by the new Notice of Allowance.[1]

Telephone inquiries should be directed to Irvin Dingle at (571) 272-3210.

This matter is being referred to Technology Center AU 3691 for processing of the request for continued examination under 37 CFR 1.114 and for consideration of the concurrently filed Information Disclosure Statement.

/Irvin Dingle/
Irvin Dingle
Petitions Examiner
Office of Petitions

[1] The request to apply the issue fee to the new Notice may be satisfied by completing and returning the new Issue Fee Transmittal Form PTOL-85(b), which includes the following language thereon: Commissioner for Patents is requested to apply the Issue Fee and Publication Fee (if any) or re-apply any previously paid issue fee to the application identified above. Petitioner is advised that, whether a fee is indicated as being due or not, the Issue Fee Transmittal Form **must** be completed and timely submitted to avoid abandonment. Note the language in bold text on the first page of the Notice of Allowance and Fee(s) Due (PTOL-85).

UNITED STATES PATENT AND TRADEMARK OFFICE

Commissioner for Patents
United States Patent and Trademark Office
P.O. Box 1450
Alexandria, VA 22313-1450
www.uspto.gov

EDELL, SHAPIRO, & FINNAN, LLC
1901 RESEARCH BOULEVARD, SUITE 400
ROCKVILLE, MD 20850

MAILED

MAR 25 2011

OFFICE OF PETITIONS

In re Application of
Ron BEN-NATAN
Application No. 11/267,387
Filed: November 4, 2005
Attorney Docket No. **0960.0007C**

DECISION ON PETITION
UNDER 37 CFR 1.137(b)

This is a decision on the petition under the unintentional provisions of 37 CFR 1.137(b), filed February 7, 2011, to revive the above-identified application.

The petition is **GRANTED**.

This application became abandoned for failure to timely pay the issue and publication fees on or before October 8, 2010, as required by the Notice of Allowance and Fee(s) Due, mailed July 8, 2010. Accordingly, the date of abandonment of this application is October 9, 2010.

It is not apparent whether the person signing the statement of unintentional delay was in a position to have firsthand or direct knowledge of the facts and circumstances of the delay at issue. Nevertheless, such statement is being treated as having been made as the result of a reasonable inquiry into the facts and circumstances of such delay. See 37 CFR 10.18(b) and Changes to Patent Practice and Procedure; Final Rule Notice, 62 Fed. Reg. 53131, 53178 (October 10, 1997), 1203 Off. Gaz. Pat. Office 63, 103 (October 21, 1997). In the event that such an inquiry has not been made, petitioner must make such an inquiry. If such inquiry results in the discovery that it is not correct that the entire delay in filing the required reply from the due date for the reply until the filing of a grantable petition pursuant to 37 CFR 1.137(b) was unintentional, petitioner must notify the Office.

The petition satisfies the requirements of 37 CFR 1.137(b) in that petitioner has supplied (1) the reply in the form of payment of the issue fee of $1510 and the publication fee of $300, (2) the petition fee of $1620; and (3) a proper statement of unintentional delay.

Telephone inquiries concerning this decision should be directed to Monica A. Graves at (571) 272-7253.

This application is being referred to the Office of Data Management Division for processing into a patent.

Thurman K. Page
Petitions Examiner
Office of Petitions

UNITED STATES PATENT AND TRADEMARK OFFICE

Commissioner for Patents
United States Patent and Trademark Office
P.O. Box 1450
Alexandria, VA 22313-1450
www.uspto.gov

OBLON, SPIVAK, MCCLELLAND MAIER & NEUSTADT, L.L.P.
1940 DUKE STREET
ALEXANDRIA VA 22314

MAILED

OCT 21 2010

OFFICE OF PETITIONS

In re Application of
Won Soon Hwang
Application No. 11/267,507
Filed: November 7, 2005
Attorney Docket No. **280761US8**

NOTICE

This is a notice regarding your request filed September 30, 2008, for acceptance of a fee deficiency submission under 37 CFR 1.28.

The Office no longer investigates or rejects original or reissue applications under 37 CFR 1.56. **1098 Off. Gaz. Pat. Office 502 (January 3, 1989)**. Therefore, nothing in this Notice is intended to imply that an investigation was done.

Your fee deficiency submission under 37 CFR 1.28 is hereby **ACCEPTED**.

This patent/application is no longer entitled to small entity status. Accordingly, all future fees paid in this application must be paid at the large entity rate.

Inquiries related to this communication should be directed to the undersigned at (571) 272-4584.

JoAnne Burke
Petitions Examiner
Office of Petitions

UNITED STATES PATENT AND TRADEMARK OFFICE

Commissioner for Patents
United States Patent and Trademark Office
P.O. Box 1450
Alexandria, VA 22313-1450
www.uspto.gov

HUNTON & WILLIAMS LLP
INTELLECTUAL PROPERTY
DEPARTMENT
1900 K STREET, N.W.
SUITE 1200
WASHINGTON DC 20006-1109

MAILED
APR 21 2011
OFFICE OF PETITIONS

In re Application of:	:
Lanza et al.	: ON REQUEST FOR
Pat. Num.: 7,838,727	: RECONSIDERATION OF
Issue Date: 11/23/2010	: PATENT TERM ADJUSTMENT
Application No. 11/267555	:
Filing or 371(c) Date: 11/04/2005	:
Atty. Docket No.: 75820.003011	:

This letter is in response to the "REQUEST FOR RECONSIDERATION OF PATENT TERM ADJUSTMENT UNDER 37 C.F.R. § 1.705," filed January 24, 2011, which is being treated as a petition under 37 CFR 1.705(d), requesting that the patent term adjustment indicated on the above-identified patent be corrected to indicate that the term of the above-identified patent is extended or adjusted by one hundred fifty-three (153) days.

The petition to correct the patent term adjustment indicated on the above-identified patent to indicate that the term of the above-identified patent is extended or adjusted by one hundred fifty-three (153) days is **DISMISSED**.

Patentees provide that this Office errantly calculated a reduction of eight (8) days in connection with the filing of an Information Disclosure Statement ("IDS"), filed March 12, 2010. Patentees aver that each item of information contained in the information disclosure statement was first cited in any communication from a foreign patent office in a counterpart application dated less than thirty days prior to the filing of the information disclosure statement.

37 CFR 1.704(c)(8) states:

> Circumstances that constitute a failure of the applicant to engage in reasonable efforts to conclude processing or examination of an application also include the following circumstances, which will result in the following reduction of the period of adjustment set forth in § 1.703 to the extent that the periods are not overlapping: Submission of a supplemental reply or other paper, other than a supplemental reply or other paper expressly requested by the examiner, after a

> reply has been filed, in which case the period of adjustment set forth in § 1.703 shall be reduced by the number of days, if any, beginning on the day after the date the initial reply was filed and ending on the date that the supplemental reply or other such paper was filed.

37 CFR 1.704(d) states:

> A paper containing only an information disclosure statement in compliance with §§ 1.97 and 1.98 will not be considered a failure to engage in reasonable efforts to conclude prosecution (processing or examination) of the application under paragraphs (c)(6), (c)(8), (c)(9), or (c)(10) of this section if it is accompanied by a statement that each item of information contained in the information disclosure statement was first cited in any communication from a foreign patent office in a counterpart application and that this communication was not received by any individual designated in § 1.56(c) more than thirty days prior to the filing of the information disclosure statement. This thirty-day period is not extendable.

A review of the record reveals that Patentee's filed an IDS on March 4, 2010. Thereafter Patentee's filed an IDS on March 12, 2010. A further review of the application file reveals that the IDS, filed March 12, 2010, was not accompanied by the statement set forth at 37 CFR 1.704(d).

Patentee's argument that the 8-day period of reduction for applicant delay should be removed is unavailing. It is undisputed that the IDS was not accompanied by the statement set forth under § 1.704(d). Further, there is no provision in the rules for the Office to accept a statement under § 1.704(d) which did not accompany (*i.e.*, was not filed contemporaneously with) the IDS. Accordingly, the reduction of 8 days for applicant delay is proper and will not be removed.

The Office acknowledges submission of the $200.00 fee set forth in 37 CFR 1.18(e). No additional fees are required.

Nothing in this decision shall be construed as a waiver of the requirement of 35 U.S.C. 154(b)(4) that any civil action by an applicant dissatisfied with a determination made by the Director under 35 U.S.C. 154(b)(3) be filed in the United States District Court for the District of Columbia within 180 days after the grant of the patent.

Telephone inquiries specific to this matter should be directed to the undersigned at (571) 272-3232.

/DLW/

Derek L. Woods
Attorney
Office of Petitions

UNITED STATES PATENT AND TRADEMARK OFFICE

Commissioner for Patents
United States Patent and Trademark Office
P.O. Box 1450
Alexandria, VA 22313-1450
www.uspto.gov

Paper No.

JONES DAY
222 E. 41ST. STREET
NEW YORK NY 10017 .

MAILED
OCT 12 2010
OFFICE OF PETITIONS

In re Application of :
Muller et al. :
Application No. 11/267,607 : ON APPLICATION FOR
Filed: November 4, 2005 : PATENT TERM ADJUSTMENT
Atty Docket No. 9516-441-999 :

This is in response to the REQUEST FOR RECONSIDERATION OF PATENT TERM ADJUSTMENT UNDER 37 C.F.R. § 1.705(B) filed July 29, 2010. Applicant requests reconsideration in part on the basis that the Office will take in excess of three years to issue the patent. Applicant also discloses that an additional period of reduction should have been entered pursuant to 37 CFR 1.704(c)(8) for applicant filing a supplemental paper on August 5, 2008 (56 days after filing of an initial reply on June 10, 2008).

The request for reconsideration of patent term adjustment under 37 CFR §1.705(b) is **GRANTED to the extent indicated herein.** The patent term adjustment at the time of the mailing of the notice of allowance remains **zero (0)** days, but including an additional 56 days of applicant delay.

The record has been reviewed and it is concluded that applicant is correct that an additional period of reduction of 56 days for applicant delay in filing a supplemental paper on August 5, 2008 is warranted. Pursuant to this decision, the 56 day reduction has been entered.

To the extent the instant application for patent term adjustment requests reconsideration of the patent term adjustment as it relates to the Office's failure to issue the patent within 3 years of the filing date, the application for patent term adjustment under 37 CFR 1.705(b) is **DISMISSED as PREMATURE**.

Knowledge of the actual date the patent issues is required to calculate the amount, if any, of additional patent term patentee is entitled to for Office failure to issue the patent within 3 years. See § 1.702(b). (This is true even where a request for continued examination (RCE) was filed). The computer will not undertake the § 1.702(b) calculation until the actual date of issuance of the patent has been determined. Likewise, the computer will not calculate any further Office delay under § 1.702(a)(4) or applicant delay under § 1.704(c)(10) until the actual date of issuance of the patent has been determined. As such, the Office can not make a determination on the correctness of the patent term adjustment until the patent has issued.

Requesting reconsideration of the patent term adjustment to be indicated on the patent under 37 CFR 1.705(b) based on the initial determination of patent term adjustment and a projected issuance date of the patent (or even the filing date of the request for continued examination) is premature. Accordingly, it is appropriate to dismiss as premature such a request.

Rather than file an application for patent term adjustment under 37 CFR 1.705(b) contesting the 37 CFR 1.702(b) calculation at the time of the mailing of the notice of allowance, applicant is advised that they may wait until the time of the issuance of the patent and file a request for reconsideration of the patent term adjustment pursuant to 37 CFR 1.705(d). As the USPTO does not calculate the amount of time earned pursuant to 37 CFR 1.702(b) until the time of the issuance of the patent, the Office will consider any request for reconsideration of the patent term adjustment due to an error in the calculation of 37 CFR 1.702(b) to be timely if the request for reconsideration is filed within two months of the issuance of the patent. However, as to all other bases for contesting the initial determination of patent term adjustment received with the notice of allowance, applicant must timely file an application for patent term adjustment prior to the payment of the issue fee[1].

---

[1] For example, if applicant disputes both the calculation of patent term adjustment under 37 CFR 1.702(a)(1) for Office failure to mail a first Office action or notice of allowance not later than fourteen months after the date on which the application was filed and under 37 CFR 1.702(b) for Office failure to issue a patent within three years of the actual filing date of the application, then applicant must still timely file an application for patent term adjustment prior to the payment of the issue fee to contest the calculation of Office delay in issuing a first Office action or notice of allowance. See 37 CFR 1.705(b) and 35 U.S.C. 154(b)(3)(B). A dispute as to the calculation of the §1.702(a)(1) period raised on request for

The Office acknowledges submission of the $200.00 fee set forth in 37 CFR 1.18(e) for consideration of the application for patent term adjustment under 37 CFR 1.705(b).

Any request for reconsideration of the patent term adjustment indicated on the patent must be timely filed within 2 months after issuance pursuant to 37 CFR 1.705(d) and must include payment of the required fee under 37 CFR 1.18(e).

Telephone inquiries specific to this decision should be directed to the undersigned at (571) 272-3219.

Nancy Johnson
Senior Petitions Attorney
Office of Petitions

---

reconsideration of patent term adjustment under 37 CFR 1.705(d) will be dismissed as untimely filed.

UNITED STATES PATENT AND TRADEMARK OFFICE

Commissioner for Patents
United States Patent and Trademark Office
P.O. Box 1450
Alexandria, VA 22313-1450
www.uspto.gov

MAILED

OCT 08 2010

OFFICE OF PETITIONS

KNOBBE MARTENS OLSON & BEAR LLP
2040 MAIN STREET
FOURTEENTH FLOOR
IRVINE CA 92614

In re Application of	:	
Ruth LAUB, et al.	:	
Application No. 11/267,631	:	ON PETITION
Filed: November 3, 2005	:	
Attorney Docket No. DECLE111.1CP1C	:	

This is in response to the petition under 37 CFR 1.183, filed June 15, 2010, requesting waiver of the requirements of 37 CFR 1.131 to the extent that it requires that all of the named inventors execute the declaration filed thereunder.

The petition is **granted to the extent *infra*.**

Petitioner asserts that, while all of the named inventors contributed to the conception of the claimed invention which is under rejection, only Ruth Laub has agreed to execute the declaration under 37 CFR 1.131 in support of establishing conception of the claimed invention prior to December 1, 2000.

As noted in MPEP 715.04, an adequate showing may lead to acceptance of a declaration under 37 CFR 1.131 executed by less than all of the named inventors of the claimed subject matter in question. Under the facts presented, it is agreed that justice requires waiver of the rules to the extent that they require Mario Di Giambattista to declare. However, the favorable decision herein does not relieve applicants from their burden to establish that the invention was completed before the date of the reference and that the claimed invention was the product of the joint inventors. See In re Carlson, 79 F.2d. 900, 27 USPQ 400 (CCPA 1935).

A petition under 37 CFR 1.183 requires the petition fee of $400 set forth in 37 CFR 1.17(f). Petitioner has submitted $130 of the fee due. Therefore, the balance due of $270 is being charged to petitioner's Deposit Account No. 11-1410.

This application is being referred to Technology Center AU 1644 for further examination on the merits.

Telephone inquiries regarding this decision should be directed the undersigned at (571) 272-7099.

David Bucci
Petitions Examiner
Office of Petitions

UNITED STATES PATENT AND TRADEMARK OFFICE

Commissioner for Patents
United States Patent and Trademark Office
P.O. Box 1450
Alexandria, VA 22313-1450
www.uspto.gov

MOORE LANDREY
1609 SHOAL CREEK BLVD
SUITE 100
AUSTIN TX 78701

MAILED
JUN 02 2011
OFFICE OF PETITIONS

In re Patent No. 5,810,753	:	
Issue Date: February 6, 2007	:	
Application No. 11/267,667	:	ON PETITION
Filed: November 4, 2005	:	
Attorney Docket No. **06-0724**	:	

This is a decision on the petition under 37 CFR 1.378(c), filed May 19, 2011, to accept the unintentionally delayed payment of a maintenance fee for the above-identified patent.

This patent expired at midnight February 6, 2011, for failure to pay the 3½ year maintenance fee. Since this petition was submitted within twenty-four months after the six-month grace period provided in 37 CFR 1.362(e), the petition was timely filed under the provisions of 37 CFR 1.378(c).

The petition is hereby **GRANTED**.

The maintenance fee is hereby accepted and the above-identified patent is reinstated as of the mail date of this decision.

The application file does not indicate a change of address has been filed in this case, although the address given on the petition differs from the address of record. A change of address should be filed in this case in accordance with MPEP 601.03. A courtesy copy of this decision is being mailed to the address noted on the petition. However, until otherwise instructed, all future correspondence regarding this application will be mailed solely to the address of record.

Petitioner will not receive future correspondence related to maintenance fees for the patent unless a "Fee Address" Indication Form (see PTO/SB/47) and Request for Customer Number (see PTO/SB/125) are submitted.

Telephone inquiries concerning this decision should be directed to JoAnne Burke at (571) 272-4584.

JoAnne Burke
Petitions Examiner
Office of Petitions

cc: Robert C. Curfiss
19826 Sundance Drive
Humble, TX 77346

UNITED STATES PATENT AND TRADEMARK OFFICE

Commissioner for Patents
United States Patent and Trademark Office
P.O. Box 1450
Alexandria, VA 22313-1450
www.uspto.gov

JAMES M. WU
JW LAW GROUP
84 W. SANTA CLARA STREET
SUITE 820
SAN JOSE, CA 95113

MAILED
DEC 03 2010
OFFICE OF PETITIONS

In re Application of
Kordus et al.
Application No 11/267,788
Filed: November 3, 2005
Attorney Docket No. 1098.P0014US

ON PETITION

This is a decision on the petition under the unintentional provisions of 37 CFR 1.137(b), filed December 14, 2009, to revive the above-identified application.

The petition is **GRANTED**.

The application became abandoned for failure to timely file a reply within the meaning of 37 CFR 1.113 to the final Office action of February 10, 2009. The proposed reply required for consideration of a petition to revive must be a Notice of Appeal (and appeal fee required by 37 CFR 41.20(b)(2), an amendment that *prima facie* places the application in condition for allowance, a Request for Continued Examination and submission (37 CFR 1.114), or the filing of a continuing application under 37 CFR 1.53(b). See MPEP 711.03(c)(III)(A)(2). A three month extension of time pursuant to the provisions of 37 CFR 1.136(a) was obtained. Accordingly, the date of abandonment of this application is May 11, 2009. A Notice of Abandonment was mailed August 17, 2009.

The petition satisfies the requirements of 37 CFR 1.137(b) in that petitioner has supplied (1) the reply in the form of a Request for Continued Examination (RCE) and fee of $405.00, and the submission required by 37 CFR 1.114; (2) the petition fee of $810.00; and (3) a proper statement of unintentional delay.

It is not apparent whether the person signing the statement of unintentional delay was in a position to have firsthand or direct knowledge of the facts and circumstances of the delay at issue. Nevertheless, such statement is being treated as having been made as the result of a reasonable inquiry into the facts and circumstances of such delay. See 37 CFR 10.18(b) and Changes to Patent Practice and Procedure; Final Rule Notice, 62 Fed. Reg. 53131, 53178 (October 10, 1997), 1203 Off. Gaz. Pat. Office 63, 103 (October 21, 1997). In the event that such an inquiry has not been made, petitioner must make such an inquiry. If such inquiry results in the discovery that it is not correct that the entire delay in filing the required reply from the due date for the reply until the filing of a grantable petition pursuant to 37 CFR 1.137(b) was unintentional, petitioner must notify the Office.

Telephone inquiries concerning this decision should be directed to the undersigned at (571) 272-3215.

This application is being referred to Technology Center AU 2893 for processing of the RCE and for appropriate action by the Examiner in the normal course of business on the amendment and IDS submitted in accordance with 37 CFR 1.114.

Charlema Grant
Petitions Attorney
Office of Petitions

UNITED STATES PATENT AND TRADEMARK OFFICE

UNITED STATES DEPARTMENT OF COMMERCE
United States Patent and Trademark Office
Address: COMMISSIONER FOR PATENTS
P.O. Box 1450
Alexandria, Virginia 22313-1450
www.uspto.gov

APPLICATION NUMBER	FILING OR 371(C) DATE	FIRST NAMED APPLICANT	ATTY. DOCKET NO./TITLE
11/267,788	11/03/2005	Louis Charles Kordus II	30-009US

CONFIRMATION NO. 4562

POA ACCEPTANCE LETTER

79662
James M. Wu
JW Law Group
84 W. Santa Clara Street
Suite 820
San Jose, CA 95113

OC000000044728693

Date Mailed: 11/30/2010

NOTICE OF ACCEPTANCE OF POWER OF ATTORNEY

This is in response to the Power of Attorney filed 12/14/2009.

The Power of Attorney in this application is accepted. Correspondence in this application will be mailed to the above address as provided by 37 CFR 1.33.

/crgrant/

Office of Data Management, Application Assistance Unit (571) 272-4000, or (571) 272-4200, or 1-888-786-0101

UNITED STATES PATENT AND TRADEMARK OFFICE

Commissioner for Patents
United States Patent and Trademark Office
P.O. Box 1450
Alexandria, VA 22313-1450
www.uspto.gov

FINNEGAN, HENDERSON, FARABOW,
GARRETT & DUNNER
LLP
901 NEW YORK AVENUE, NW
WASHINGTON DC 20001-4413

MAILED

AUG 30 2010

OFFICE OF PETITIONS

In re Application of :
Jakobovits et al. :
Application No. 11/267,860 :
Filed: November 4, 2005 :
For: HUMAN MONOCLONAL :
ANTIBODIES TO EPIDERMAL GROWTH :
FACTOR RECEPTOR :

ON APPLICATION FOR
PATENT TERM ADJUSTMENT

This is in response to the "APPLICATION FOR PATENT TERM ADJUSTMENT-PRE-GRANT", filed April 26, 2010. Applicant requests that the determination of patent term adjustment be corrected from five hundred eighty-seven (587) days to six hundred twenty-two (622) days.

The Office acknowledges submission of the $200.00 fee set forth in 37 CFR 1.18(e) for consideration of the application for patent term adjustment under 37 CFR 1.705(b).

The application for patent term adjustment is **GRANTED**.

Applicants state that a reduction of 43 days is required pursuant to 1.704(b) for the delay in submitting a reply to the Notice To Comply With Requirements For Patent Applications Containing Nucleotide Sequence and/or Amino Acid Sequence Disclosures mailed on December 14, 2005. Applicants also dispute the 78 day reduction for the submission of the information disclosure statements on September 12, 2008 and October 31, 2008. Applicants contend the information disclosure statements (IDS) submitted contained statements pursuant to 37 CFR 1.704(d). Thus, applicants contend disclosing the relevant art cannot be a failure to engage in reasonable efforts to conclude prosecution of the application.

A review of the record confirms that applicants should have been assessed a 43 day reduction.

37 CFR §1.704(b) provides:

> an applicant shall be deemed to have failed to engage in reasonable efforts to conclude processing or examination of an application for the cumulative total of any periods of time in excess of three months that are taken to reply to any notice or action by the Office making any rejection, objection, argument, or other request, measuring such three-month period from the date the notice or action was mailed or given to the applicant, in which case the period of adjustment set forth in §1.703 shall be reduced by the number of days, if any, beginning on the day after the date that is three months after the date of mailing or transmission of the Office communication notifying the applicant of the rejection, objection, argument, or other request and ending on the date the reply was filed.

A Notice To Comply With Requirements For Patent Applications Containing Nucleotide Sequence and/or Amino Acid Sequence Disclosures was mailed December 14, 2005. A reply was not received in the Office until April 26, 2006. Pursuant to 37 CFR 1.704(b), a reduction of 43 days is required for applicant delay for the period beginning March 15, 2006, the day after the date that is three months after the mailing of the Notice and ending on April 26, 2006, the date the reply was filed. A reduction period of 43 days will be entered.

Further review shows that the 78 day reduction for the submission of the information disclosure statements on September 12, 2008 and October 31, 2008 was not warranted. 37 CFR §1.704(c)(8) provides that a period of reduction is entered for:

> Circumstances that constitute a failure of the applicant to engage in reasonable efforts to conclude processing or examination of an application also include the following circumstances, which will result in the following reduction of the period of adjustment set forth in § 1.703 to the extent that the periods are not overlapping:
>
> (8) Submission of a supplemental reply or other paper, other than a supplemental reply or other paper expressly requested by the examiner, after a reply has been filed, in which case the

> period of adjustment set forth in § 1.703 shall be reduced by the number of days, if any, beginning on the day after the date the initial reply was filed and ending on the date that the supplemental reply or other such paper was filed;

37 CFR 1.704(d) provides:

> A paper containing only an information disclosure statement in compliance with § § 1.97 and 1.98 will not be considered a failure to engage in reasonable efforts to conclude prosecution (processing or examination) of the application under paragraphs (c)(6), (c)(8), (c)(9), or (c)(10) of this section if it is accompanied by a statement that each item of information contained in the information disclosure statement was first cited in any communication from a foreign patent office in a counterpart application and that this communication was not received by any individual designated in § 1.56(c) more than thirty days prior to the filing of the information disclosure statement. This thirty-day period is not extendable.

In this instance, the information disclosure statements submitted on September 12, 2008 and on October 31, 2008 both contained statements pursuant to 37 CFR 1.704(d). Thus, the submission of the two Information Disclosure Statements does not constitute a failure to engage in reasonable efforts to conclude prosecution. Accordingly, the 78 day reduction will be removed.

Applicants' delay prior to the mailing of the Notice of Allowance is 43 days. Office delay prior to the mailing of the Notice of Allowance is 665 days.

In view thereof, the correct patent term adjustment at the time of the mailing of the notice of allowance is six hundred twenty-two (622) days.

Any request for reconsideration of the patent term adjustment indicated on the patent must be timely filed within 2 months after issuance pursuant to 37 CFR 1.705(d) and **must** include payment of the required fee under 37 CFR 1.18(e).

The Office of Data Management has been advised of this decision. This application is being referred to the Office of Data Management for issuance of the patent.

Telephone inquiries specific to this matter should be directed to Petitions Attorney Charlema Grant at (571) 272-3215.

Anthony Knight
Director
Office of Petitions

Enclosure: Copy of REVISED PALM Screen

PTA/PTE Information | Patent Term Adjustment | Patent Term Extension

Application Number*: 11267860 Search | Explanation of PTA Calculation | Explanation of PTE Calculation

PTA Calculations for Application: 11267860

Application Filing Date	11/04/2005	OverLapping Days Between (A and B) or (A and C)	0
Issue Date of Patent		Non-Overlapping USPTO Delays:	665
A Delays	665	PTO Manual Adjustment	35
B Delays	0	Applicant Delay (APPL)	78
C Delays	0	Total PTA (days)	622

* - Sorted Column

File Contents History

Action Number	Action Recorded Date	Action Due Date	Action Code	Action Description	Duration PTO	Duration APPL	Parent Action Number
66	08/28/2010		P028	Adjustment of PTA Calculation by PTO	35	0	
57	02/05/2010		MN/=.	Mail Notice of Allowance		0	
56	02/03/2010		IREV	Issue Revision Completed		0	
55	02/03/2010		DVER	Document Verification		0	
54	02/03/2010		N/=.	Notice of Allowance Data Verification Completed		0	

53	02/03/2010		DOCK	Case Docketed to Examiner in GAU			0
52	02/01/2010		EX.A	Examiner's Amendment Communication			0
51	02/01/2010		CNTA	Notice of Allowability			0
50	01/26/2010		P574	Paralegal TD Accepted			0
47	01/20/2010		FWDX	Date Forwarded to Examiner			0
49	01/06/2010	01/06/2010	DIST	Terminal Disclaimer Filed			46
48	01/06/2010		DIST	Terminal Disclaimer Filed			0
46	01/06/2010		A.NE	Amendment after Final Rejection			0
45	10/06/2009	12/14/2008	MCTFR	Mail Final Rejection (PTOL - 326)	296		36
44	10/01/2009		CTFR	Final Rejection			0
42	10/31/2008		IDSC	Information Disclosure Statement considered			0
41	10/31/2008	08/14/2008	M844	Information Disclosure Statement (IDS) Filed		78	36
40	10/31/2008		WIDS	Information Disclosure Statement (IDS) Filed			0
37	09/26/2008		FWDX	Date Forwarded to Examiner			0
43	09/12/2008		IDSC	Information Disclosure Statement considered			0
39	09/12/2008		M844	Information Disclosure Statement (IDS) Filed			0
35	09/12/2008		WIDS	Information Disclosure Statement (IDS) Filed			0
36	08/14/2008		A...	Response after Non-Final Action			0
34	05/15/2008		MCTNF	Mail Non-Final Rejection			0
33	05/14/2008		CTNF	Non-Final Rejection			0
31	03/06/2008		FWDX	Date Forwarded to Examiner			0
30	02/08/2008		ELC.	Response to Election / Restriction Filed			0
29	01/08/2008	01/04/2007	MCTRS	Mail Restriction Requirement	369		-1
28	01/07/2008		CTRS	Requirement for Restriction / Election			0
26	12/04/2006		DOCK	Case Docketed to Examiner in GAU			0
32	08/29/2006		IDSC	Information Disclosure Statement considered			0
27	08/29/2006		WIDS	Information Disclosure Statement (IDS) Filed			0
23	08/23/2006		TSSCOMP	IFW TSS Processing by Tech Center Complete			0
22	08/23/2006		DOCK	Case Docketed to Examiner in GAU			0
16	05/10/2006		WROIPE	Application Return from OIPE			0
15	05/10/2006		COMP	Application Is Now Complete			0
14	05/10/2006		ROIPE	Application Return TO OIPE			0
13	05/09/2006		OIPE	Application Dispatched from OIPE			0
12	05/09/2006		COMP	Application Is Now Complete			0
7	05/05/2006		CRFE	CRF Is Good Technically / Entered into Database			0
24	04/26/2006		IDSC	Information Disclosure Statement considered			0
21	04/26/2006		A.PE	Preliminary Amendment			0
20	04/26/2006		RCAP	Reference capture on IDS			0

19.7	04/26/2006	M844	Information Disclosure Statement (IDS) Filed	0
19	04/26/2006	WIDS	Information Disclosure Statement (IDS) Filed	0
11	04/26/2006	ADDFLFEE	Additional Application Filing Fees	0
9	04/26/2006	SEQLIST	A set of symbols and procedures, provided to the PTO on a set of computer listings, that describe in	0
8	04/26/2006	CRFL	CRF Disk Has Been Received by Preexam / Group / PCT	0
5	12/07/2005	L128	Cleared by L&R (LARS)	0
4	11/21/2005	L198	Referred to Level 2 (LARS) by OIPE CSR	0
3	11/21/2005	CLSS	CASE CLASSIFIED BY OIPE	0
2	11/16/2005	SCAN	IFW Scan & PACR Auto Security Review	0
25	11/04/2005	IDSC	Information Disclosure Statement considered	0
18	11/04/2005	RCAP	Reference capture on IDS	0
17.7	11/04/2005	M844	Information Disclosure Statement (IDS) Filed	0
17	11/04/2005	WIDS	Information Disclosure Statement (IDS) Filed	0
10	11/04/2005	CLAIM	Claim Preliminary Amendment	0
1	11/04/2005	IEXX	Initial Exam Team nn	0

Export to: Excel

UNITED STATES PATENT AND TRADEMARK OFFICE

UNITED STATES DEPARTMENT OF COMMERCE
United States Patent and Trademark Office
Address: COMMISSIONER FOR PATENTS
P.O. Box 1450
Alexandria, Virginia 22313-1450
www.uspto.gov

HICKMAN PALERMO TRUONG & BECKER, LLP
2055 GATEWAY PLACE
SUITE 550
SAN JOSE, CA 95110

Mail Date: 08/04/2010

Applicant	: Keyur Patel	: DECISION ON REQUEST FOR
Patent Number	: 7656819	: RECALCULATION of PATENT
Issue Date	: 02/02/2010	: TERM ADJUSTMENT IN VIEW
Application No	: 11/267,865	: OF WYETH AND NOTICE OF INTENT TO
Filed	: 11/04/2005	: ISSUE CERTIFICATE OF CORRECTION
		:

The Request for Recalculation is **GRANTED** to the extent indicated.

The patent term adjustment has been determined to be **641** days. The USPTO will *sua sponte* issue a certificate of correction reflecting the amount of PTA days determined by the recalculation.

Prior to the issuance of the certificate of correction, the USPTO will afford patentee an opportunity to be heard and request reconsideration. Accordingly, patentee has **one month or thirty (30) days**, whichever is longer, to file a request for reconsideration of this patent term adjustment calculation. See 35 U.S.C. 154(b)(3)(B)(ii) and 37 CFR 1.322(a)(4). No extensions of time will be granted under 37 CFR 1.136.

Patentee should use document code PET.OP if electronically filing a request for reconsideration of this patent term adjustment calculation. The patentee must also include the information required by 37 CFR 1.705(b)(2) and the fee required by 37 CFR 1.18(e). If patentee does not file a timely request for reconsideration of this patent term adjustment calculation including the information required by 37 CFR 1.705(b)(2) and the fee required by 37 CFR 1.18(e), the USPTO will issue a certificate of correction reflecting the PTA determination noted above.

Patentee should be aware that in order to preserve the right to review in the United States District Court for the District of Columbia of the USPTO patent term adjustment determination, patentee must ensure that he or she also take the steps required under 35 U.S.C. 154(b)(4)(A) in a timely manner. Nothing in the request for recalculation should be construed as providing an alternative time frame for commencing a civil action under 35 U.S.C. 154(b)(4)(A).

Any questions concerning this decision should be directed to the Office of Patent Legal Administration at 571-272-7702.

UNITED STATES PATENT AND TRADEMARK OFFICE

Commissioner for Patents
United States Patent and Trademark Office
P.O. Box 1450
Alexandria, VA 22313-1450
www.uspto.gov

Stephanie Seidman
McKenna Long & Aldridge LLP
4435 Eastgate Mall, Suite 400
San Diego, CA 92121

MAILED
JUL 13 2011
OFFICE OF PETITIONS

In re Application of	:	
GUYON et al.	:	
Application No. 11/267,871	:	DECISION ON APPLICATION
Filed: 11/03/2005	:	FOR
Docket No. 3800073.00022/925	:	PATENT TERM ADJUSTMENT

This is a decision on the "REQUEST FOR RECONSIDERATION OF PATENT TERM ADJUSTMENT UNDER 37 C.F.R. § 1.705(b)" filed January 25, 2011. Applicants request that the initial determination of patent term adjustment under 35 U.S.C. 154(b) be corrected from seventy-three (73) days to seventy-six (76) days.

The application for patent term adjustment is **GRANTED**.

The Office has updated the PALM and PAIR screens to reflect that the corrected Patent Term Adjustment (PTA) determination at the time of the mailing of the Notice of Allowance is seventy-six (76) days. A copy of the updated PAIR screen, showing the corrected determination, is enclosed.

A review of the application history confirms that applicants' characterization of the basis for and amounts of the adjustments and reductions of patent term in this application at the time of the mailing of the notice of allowance are correct.

In view thereof, the corrected determination of patent term adjustment at the time of the mailing of the Notice of Allowance is seventy-six (76) days.

The Office will charge the Deposit Account for the $200.00 fee set forth in 37 CFR 1.18(e), as authorized. No additional fees are required.

The Office notes that the address indicated in the fee authorization differs from the address of record. As a one-time courtesy, the Office will mail the decision to the address listed in the fee authorization. However, all future correspondence related to this application will be mailed to the address of record until otherwise notified. Applicants are encouraged to file the proper change of correspondence request with the USPTO.

Applicants are reminded that any delays by the Office pursuant to 37 CFR 1.702(a)(4) and 1.702(b) and any applicant delays under 37 CFR 1.704(c)(10) will be calculated at the time of the issuance of the patent and applicants will be notified in the Issue Notification letter that is mailed to applicants approximately three weeks prior to issuance.

The Office of Data Management has been advised of this decision. This matter is being referred to the Office of Data Management for issuance of the patent.

Telephone inquiries specific to this matter should be directed to the undersigned at (571) 272-3211.

Christina Tartera Donnell

Christina Tartera Donnell
Senior Petitions Attorney
Office of Petitions

Enclosure: Copy of REVISED PAIR Screen

Cc: K&L Gates LLP
3580 Carmel Mountain Road
Suite 200
San Diego CA 92130

Patent Term Adjustments

Patent Term Adjustment (PTA) for Application Number: 11/267,871

Filing or 371(c) Date:	11-03-2005	Overlapping Days Between {A and B} or {A and C}:	0
Issue Date of Patent:	-	Non-Overlapping USPTO Delays:	396
A Delays:	396	PTO Manual Adjustments:	3
B Delays:	0	Applicant Delays:	323
C Delays:	0	Total PTA Adjustments:	76

Patent Term Adjustment History **Explanation Of Calculations**

Number	Date	Contents Description	PTO (Days)	APPL (Days)	Start
107	07-08-2011	Adjustment of PTA Calculation by PTO		33	0
106	07-08-2011	Adjustment of PTA Calculation by PTO	36		0
97	01-03-2011	Mail Notice of Allowance			0
96	01-03-2011	Issue Revision Completed			0
95	01-03-2011	Document Verification			0
94	01-03-2011	Notice of Allowance Data Verification Completed			0
93	01-03-2011	Allowability Notice			0
92	12-08-2010	Information Disclosure Statement considered			0
91	09-17-2010	Information Disclosure Statement considered			0
90	12-08-2010	Information Disclosure Statement (IDS) Filed			0
89	12-17-2010	Date Forwarded to Examiner			0
88	12-09-2010	Amendment after Final Rejection		91	83
87	12-09-2010	Request for Extension of Time - Granted			0
86	12-08-2010	Information Disclosure Statement (IDS) Filed			0
85	09-17-2010	Information Disclosure Statement (IDS) Filed			0
84	09-17-2010	Information Disclosure Statement (IDS) Filed			0
83	06-09-2010	Mail Final Rejection (PTOL - 326)			0
82	06-07-2010	Final Rejection			0

81	02-11-2010	Information Disclosure Statement considered			0
80	02-08-2010	Information Disclosure Statement considered			0
79	03-22-2010	Date Forwarded to Examiner			0
78	02-11-2010	Response after Non-Final Action		36	68
77	02-11-2010	Request for Extension of Time - Granted			0
76	02-11-2010	Affidavit(s) (Rule 131 or 132) or Exhibit(s) Received			0
75	02-08-2010	Reference capture on IDS			0
74	02-08-2010	Information Disclosure Statement (IDS) Filed			0
73	02-11-2010	Information Disclosure Statement (IDS) Filed			0
72	02-11-2010	Information Disclosure Statement (IDS) Filed			0
71	02-08-2010	Information Disclosure Statement (IDS) Filed			0
70	06-04-2009	Reference capture on IDS			0
69	06-04-2009	Information Disclosure Statement (IDS) Filed			0
68	10-06-2009	Mail Non-Final Rejection			0
67	10-01-2009	Non-Final Rejection			0
66	06-04-2009	Information Disclosure Statement considered			0
65	07-13-2009	Date Forwarded to Examiner			0
64	06-09-2009	Response after Non-Final Action		97	58
63	06-09-2009	Request for Extension of Time - Granted			0
62	06-04-2009	Information Disclosure Statement (IDS) Filed			0
61	07-16-2008	Reference capture on IDS			0
60	07-16-2008	Information Disclosure Statement (IDS) Filed		8	44
59	07-08-2008	Information Disclosure Statement (IDS) Filed			0
58	12-04-2008	Mail Non-Final Rejection	26		44
57	12-03-2008	Non-Final Rejection			0

54	01-27-2006	Information Disclosure Statement considered			0
53	07-12-2006	Information Disclosure Statement considered			0
52	10-27-2006	Information Disclosure Statement considered			0
51	11-27-2006	Information Disclosure Statement considered			0
50	12-11-2006	Information Disclosure Statement considered			0
49	07-08-2008	Information Disclosure Statement considered			0
48	07-16-2008	Information Disclosure Statement considered			0
47	07-08-2008	Reference capture on IDS			0
46	07-08-2008	Information Disclosure Statement (IDS) Filed			0
45	08-08-2008	Date Forwarded to Examiner			0
44	07-08-2008	Response to Election / Restriction Filed		91	35
43	07-08-2008	Request for Extension of Time - Granted			0
39	07-16-2008	Information Disclosure Statement (IDS) Filed			0
38	07-08-2008	Information Disclosure Statement (IDS) Filed			0
37	05-27-2008	Change in Power of Attorney (May Include Associate POA)			0
36	05-22-2008	Correspondence Address Change			0
35	01-08-2008	Mail Restriction Requirement	370		0.5
34	01-07-2008	Restriction/Election Requirement			0
33	10-25-2007	PG-Pub Issue Notification			0
32	08-15-2007	Mail-Petition Decision - Granted			0
31	06-02-2006	Petition Entered			0
29	12-11-2006	Reference capture on IDS			0
28.7	12-11-2006	Information Disclosure Statement (IDS) Filed			0
28	12-11-2006	Information Disclosure Statement (IDS) Filed			0
27	11-27-	Reference capture on IDS			0

	2006		
26.7	11-27-2006	Information Disclosure Statement (IDS) Filed	0
26	11-27-2006	Information Disclosure Statement (IDS) Filed	0
25	10-27-2006	Reference capture on IDS	0
24.7	10-27-2006	Information Disclosure Statement (IDS) Filed	0
24	10-27-2006	Information Disclosure Statement (IDS) Filed	0
23	07-12-2006	Reference capture on IDS	0
22.7	07-12-2006	Information Disclosure Statement (IDS) Filed	0
22	07-12-2006	Information Disclosure Statement (IDS) Filed	0
21	06-28-2006	New or Additional Drawing Filed	0
20	06-28-2006	Preliminary Amendment	0
19.7	01-27-2006	Information Disclosure Statement (IDS) Filed	0
19	01-27-2006	Information Disclosure Statement (IDS) Filed	0
18	01-24-2006	IFW TSS Processing by Tech Center Complete	0
16	01-24-2006	Case Docketed to Examiner in GAU	0
15	12-23-2005	Preliminary Amendment	0
14	12-23-2005	Application Dispatched from OIPE	0
13	12-27-2005	Application Is Now Complete	0
12	12-14-2005	Additional Application Filing Fees	0
10	12-14-2005	A statement by one or more inventors satisfying the requirement under 35 USC 115, Oath of the Applic	0
9	12-14-2005	Applicant has submitted new drawings to correct Corrected Papers problems	0
8	12-13-2005	Cleared by L&R (LARS)	0
6	11-23-2005	Referred to Level 2 (LARS) by OIPE CSR	0
5	11-23-2005	CASE CLASSIFIED BY OIPE	0
4	11-19-2005	IFW Scan & PACR Auto Security Review	0

3	11-17-2005	CRF Is Good Technically / Entered into Database	0
2	11-03-2005	CRF Disk Has Been Received by Preexam / Group / PCT	0
1	11-03-2005	Initial Exam Team nn	0
0.5	11-03-2005	Filing date	0

Close Window

UNITED STATES PATENT AND TRADEMARK OFFICE

Commissioner for Patents
United States Patent and Trademark Office
P.O. Box 1450
Alexandria, VA 22313-1450
www.uspto.gov
DIW Jan-11

STOLOWITZ FORD COWGER LLP
621 SW MORRISON ST
SUITE 600
PORTLAND OR 97205

MAILED
JAN 31 2011
OFFICE OF PETITIONS

In re Application of :
Hsu et al. : DECISION ON PETITION
Application Number: 11/267888 :
Filing Date: 11/04/2005 :
Attorney Docket Number: 9585-0175 :

This is a decision on the petition styled under 37 CFR 1.183, filed on June 7, 2010, which is treated as a petition seeking waiver of 37 CFR §§ 1.67, 1.172, and 1.175 where they require that a supplemental declaration be executed by a named inventor.[1]

The petition is before the Office of Patent Legal Administration for decision.

The petition is **GRANTED**.

REVIEW OF FACTS

1. On November 4, 2005, the application was filed as a reissue of U.S. Patent No. 6,641,272.

2. On July 10, 2006, a reissue oath or declaration by the inventors was filed.

3. On March 5, 2010, a non-final Office action was mailed, requiring, *inter alia*, a new reissue declaration.

4. On June 7, 2010, the subject petition was filed, accompanied by an amendment and a supplemental reissue declaration. Petitioners state, via the declaration of Pei-Chi Wu, that the reissue declaration and application was sent to the last known

[1] Once an application has received a fully executed oath or declaration and been placed on the files for examination, the provisions of 37 CFR 1.47 no longer apply. Rather, the remedy for treating an inventor's refusal to also sign a supplemental oath or declaration is waiver of 37 CFR 1.67. See MPEP 603.

address of the non-signing inventor, but that the inventor's secretary stated, in a telephone call, that the inventor was refusing to sign the declaration. No signed declaration has been received from the inventor.

DECISION ON PETITION UNDER 37 CFR 1.183
TO WAIVE §§ 1.67 AND 1.175

In view of the efforts recounted in the petition to locate and obtain the signature of Chuan-Yu Hsu, on the supplemental declaration in compliance with 37 CFR 1.175, it is agreed that justice would be served by waiving the requirement for the signature of joint inventor Hsu on the supplemental declaration filed on June 7, 2010.

CONCLUSION

1. The petition is granted.

2. The petition fee of $400.00 required by § 1.17(f) has been received, no further fees are due.

3. The application is being referred to Technology Center Art Unit 2872 for further processing.

4. Telephone inquiries related to this decision only should be directed to Senior Petitions Attorney Douglas I. Wood at (571) 272-3231.

5. Inquiries regarding petition status or general petition information are handled by the Office of Petitions staff at (571) 272-9282.

Kenneth M. Schor
Senior Legal Advisor
Office of Patent Legal Administration
Office of the Deputy Commissioner
for Patent Examination Policy

UNITED STATES PATENT AND TRADEMARK OFFICE

COMMISSIONER FOR PATENTS
UNITED STATES PATENT AND TRADEMARK OFFICE
P.O. BOX 1450
ALEXANDRIA, VA 22313-1450
www.uspto.gov

KATTEN MUCHIN ROSENMAN LLP
(C/O PATENT ADMINISTRATOR)
2900 K STREET NW, SUITE 200
WASHINGTON DC 20007-5118

MAILED

OCT 12 2010

OFFICE OF PETITIONS

In re Application of :
Horsky, et al. :
Application No. 11/268,005 :
Filed: November 7, 2005 :
Attorney Docket No. 211843-00055 :

ON PETITION

This is a decision on the petition under the unintentional provisions of 37 CFR 1.137(b), filed August 6, 2010, to revive the above-identified application.

The petition is GRANTED.

The application became abandoned February 16, 2010 for failure to timely submit a proper reply to the Notice of File Corrected Application Papers (Notice) mailed December 15, 2009. The Notice set a two month shortened statutory period of time for reply. Notice of Abandonment was mailed March 3, 2010.

A grantable petition under 37 CFR 1.137(b) must be accompanied by: (1) the required reply, unless previously filed; (2) the petition fee as set forth in 37 CFR 1.17(m); (3) a statement that the entire delay in filing the required reply from the due date for the reply until the filing of a grantable petition pursuant to 37 CFR 1.137(b) was unintentional; and (4) any terminal disclaimer (and fee as set forth in 37 CFR 1.20(d)) required by 37 CFR 1.137(d). Where there is a question as to whether either the abandonment or the delay in filing a petition under 37 CFR 1.137 was unintentional, the Director may require additional information. See MPEP 711.03(c)(II)(C) and (D).

The instant petition has been carefully reviewed and found in compliance with the requirements set forth above.

This application is being directed to the Office of Data Management for further processing.

/ALESIA M. BROWN/

Alesia M. Brown
Petitions Attorney
Office of Petitions

UNITED STATES PATENT AND TRADEMARK OFFICE

Commissioner for Patents
United States Patent and Trademark Office
P.O. Box 1450
Alexandria, VA 22313-1450
www.uspto.gov

MAILED

OCT 26 2010

OFFICE OF PETITIONS

WALTER A. RODGERS
RODGERS & RODGERS
6100 LAKE FORREST DRIVE
SUITE 340
ATLANTA, GA 30328

In re Application of	:	
John Devincenzo	:	
Application No. 11/268,053	:	ON PETITION
Filed: November 8, 2005	:	
Attorney Docket No. 250.24	:	

This is a decision on the petition filed August 23, 2010 under 37 CFR 1.137(b), to revive the above-identified application.

The petition is **GRANTED.**

The above-identified application became abandoned for failure to submit a substitute oath or declaration in a timely manner in reply to the Notice of Allowance mailed February 18, 2010, which set a statutory period for reply of three (3) months. Accordingly, the above-identified application became abandoned on May 19, 2010.

The petition satisfies the conditions for revival pursuant to the provisions of 37 CFR 1.137(b) in that (1) the reply in the form of a substitute oath or declaration; (2) the petition fee; (3) the required statement of unintentional delay have been received.

Telephone inquiries concerning this decision should be directed to the undersigned at (571) 272-3210.

This matter is being referred to the Office of Data Management for further processing.

Irvin Dingle
Petitions Examiner
Office of Petitions

UNITED STATES PATENT AND TRADEMARK OFFICE

Commissioner for Patents
United States Patent and Trademark Office
P.O. Box 1450
Alexandria, VA 22313-1450
www.uspto.gov

JEAN V. RITTMANN
2016 BROADWAY AVE.
EVERETT, WA 98201-2318

MAILED
OCT 28 2010
OFFICE OF PETITIONS

In re Application of	:	
Jean V. Rittmann	:	
Application No. 11/268,055	:	DECISION ON PETITION
Filed: November 8, 2005	:	
Attorney Docket No.	:	

This is a decision on the petition, filed June 25, 2010, which is being treated as a petition under 37 CFR 1.8(b), requesting withdrawal of the holding of abandonment in the above-identified application.

The petition is **GRANTED**.

This application was held abandoned for failure to timely respond to the Office action of October 22, 2009, which set a one (1) month period for reply. No extension of time pursuant to the provisions of 37 CFR 1.136(a) was obtained. Accordingly, a reply was due on or before November 22, 2009.

Petitioner states that a timely reply was submitted via facsimile transmission on November 17, 2009, which includes the amendment. Petitioner has submitted a copy of the previously mailed correspondence, which bears a certificate of facsimile transmission dated November 17, 2009, which would have rendered the reply timely if received.

The file record does not include the originally submitted papers. Failure to receive correspondence which includes a certificate of mailing or certificate of facsimile transmission is addressed in 37 CFR 1.8(b), reproduced below:

> In the event that correspondence is considered timely filed by being mailed or transmitted in accordance with paragraph (a) of this section, but not received in the U.S. Patent and Trademark Office after a reasonable amount of time has elapsed from the time of mailing or transmitting of the correspondence, or after the application is held to be abandoned, or after the proceeding is dismissed, terminated, or decided with prejudice, the correspondence will be considered timely if the party who forwarded such correspondence:

(1) Informs the Office of the previous mailing or transmission of the correspondence promptly after becoming aware that the Office has no evidence of receipt of the correspondence;

(2) Supplies an additional copy of the previously mailed or transmitted correspondence and certificate; and

(3) Includes a statement which attests on a personal knowledge basis or to the satisfaction of the Director to the previous timely mailing or transmission. If the correspondence was sent by facsimile transmission, a copy of the sending unit's report confirming transmission may be used to support this statement.

The petition satisfies the above requirements of 37 CFR 1.8(b). Accordingly, the holding of abandonment for failure to timely file a reply to the Office action of October 22, 2009 is hereby withdrawn and the application restored to pending status.

The copy of the reply received with the petition will be accepted in place of the reply shown to have been transmitted by facsimile on November 17, 2009.

This application is being referred to Technology Center AU 3637 for appropriate action in the normal course of business on the reply received with petition.

Irvin Dingle
Petitions Examiner
Office of Petitions

UNITED STATES PATENT AND TRADEMARK OFFICE

Commissioner for Patents
United States Patent and Trademark Office
P.O. Box 1450
Alexandria, VA 22313-1450
www.uspto.gov

JAY CHESAVAGE
3833 MIDDLEFIELD
PALO ALTO, CA 94303

MAILED

SEP 12 2011

OFFICE OF PETITIONS

In re Application of :
Brian L. Bures, et al. :
Application No. 11/268,167 : ON PETITION
Filed: November 7, 2005 :
Attorney Docket No.: AASC-CED-CIP :

This is a decision on the petition, filed August 26, 2011, which is being treated as a petition under 37 CFR 1.8(b), requesting withdrawal of the holding of abandonment in the above-identified application.

The petition is **GRANTED**.

This application was held abandoned for failure to timely respond to the Notice of Allowance of May 3, 2011, which set a three (3) month shortened statutory period for reply. Accordingly, a reply was due on or before August 3, 2011.

Petitioner states that a timely reply was mailed via certificate of mailing on August 2, 2011, which included the following papers: PTOL-85 and check #1801. Petitioner has submitted a copy of the previously mailed correspondence, which bears a certificate of mailing dated August 2, 2011, which would have rendered the reply timely if received.

The file record does not include the originally submitted papers. Failure to receive correspondence which includes a certificate of mailing or certificate of facsimile transmission is addressed in 37 CFR 1.8(b), reproduced below:

> In the event that correspondence is considered timely filed by being mailed or transmitted in accordance with paragraph (a) of this section, but not received in the U.S. Patent and Trademark Office after a reasonable amount of time has elapsed from the time of mailing or transmitting of the correspondence, or after the application is held to be abandoned, or after the proceeding is dismissed, terminated, or decided with prejudice, the correspondence will be considered timely if the party who forwarded such correspondence:

(1) Informs the Office of the previous mailing or transmission of the correspondence promptly after becoming aware that the Office has no evidence of receipt of the correspondence;

(2) Supplies an additional copy of the previously mailed or transmitted correspondence and certificate; and

(3) Includes a statement which attests on a personal knowledge basis or to the satisfaction of the Director to the previous timely mailing or transmission. If the correspondence was sent by facsimile transmission, a copy of the sending unit's report confirming transmission may be used to support this statement.

The petition satisfies the above requirements of 37 CFR 1.8(b). Accordingly, the holding of abandonment for failure to timely file a reply to the Notice of Allowance of May 3, 2011 is hereby withdrawn and the application restored to pending status.

The Notice of Abandonment mailed August 16, 2011 is vacated.

The Part B – Fee(s) Transmittal copy received with the petition will be accepted in place of the reply shown to have been mailed on August 2, 2011.

This application is being referred to the Office of Data Management for further processing in accordance with this decision on petition.

Telephone inquires related to this decision should be directed to the undersigned at (571) 272-3204. Telephone inquiries related to processing as a patent should be directed to (571) 272-4200.

/SDB/

Sherry D. Brinkley
Petitions Examiner
Office of Petitions

UNITED STATES PATENT AND TRADEMARK OFFICE

Commissioner for Patents
United States Patent and Trademark Office
P.O. Box 1450
Alexandria, VA 22313-1450
www.uspto.gov

MAILED

SEP 15 2010

OFFICE OF PETITIONS

KNOBBE MARTENS OLSON & BEAR LLP
2040 MAIN STREET
FOURTEENTH FLOOR
IRVINE CA 92614

In re Application of	:	
Evan K. Fram et al	:	
Application No. 11/268,261	:	DECISION GRANTING PETITION
Filed: November 3, 2005	:	UNDER 37 CFR 1.313(c)(2)
Attorney Docket No. DRSYS.001 A2	:	

This is a decision on the petition under 37 CFR 1.313(c)(2), filed September 14, 2010, to withdraw the above-identified application from issue after payment of the issue fee.

The petition is **GRANTED**.

The above-identified application is withdrawn from issue for consideration of a submission under 37 CFR 1.114 (request for continued examination). *See* 37 CFR 1.313(c)(2).

Petitioner is advised that the issue fee paid on August 16, 2010 cannot be refunded. If, however, this application is again allowed, petitioner may request that it be applied towards the issue fee required by the new Notice of Allowance.[1]

Telephone inquiries should be directed to the undersigned at (571) 272-3208.

This application is being referred to Technology Center AU 2624 for processing of the request for continued examination under 37 CFR 1.114 and for consideration of the concurrently filed IDS.

/Karen Creasy/
Karen Creasy
Petitions Examiner
Office of Petitions

[1] *The request to apply the issue fee to the new Notice may be satisfied by completing and returning the new Part B – Fee(s) Transmittal Form (along with any balance due at the time of submission). Petitioner is advised that the Issue Fee Transmittal Form* ***must*** *be completed and timely submitted to avoid abandonment of the application.*

UNITED STATES PATENT AND TRADEMARK OFFICE

Commissioner for Patents
United States Patent and Trademark Office
P.O. Box 1450
Alexandria, VA 22313-1450
www.uspto.gov

MAILED

AUG 03 2010

OFFICE OF PETITIONS

PHILIP S. JOHNSON
JOHNSON & JOHNSON
ONE JOHNSON & JOHNSON PLAZA
NEW BRUNSWICK NJ 08933-7003

In re Application of	:	
Weisenburgh II, et al.	:	
Application No. 11/268,337	:	ON REQUEST FOR
Filed: November 7, 2005	:	RECONSIDERATION OF
Attorney Docket Number: END5291USCIP3	:	PATENT TERM ADJUSTMENT

This is a decision on the petition under 37 CFR 1.705(b), filed January 21, 2010. Applicants believe that they should be accorded additional PTA.

As the instant application for patent term adjustment requests reconsideration of the patent term adjustment solely as it relates to the Office's failure to issue the patent within 3 years of the filing date, the application for patent term adjustment under 37 CFR 1.705(b) is **DISMISSED as PREMATURE**.

Knowledge of the actual date the patent issues is required to calculate the amount, if any, of additional patent term patentee is entitled to for Office failure to issue the patent within 3 years. See § 1.702(b). (This is true even where a request for continued examination (RCE) was filed). The computer will not undertake the § 1.702(b) calculation until the actual date of issuance of the patent has been determined. Likewise, the computer will not calculate any further Office delay under § 1.702(a)(4) or applicant delay under § 1.704(c)(10) until the actual date of issuance of the patent has been determined. As such, the Office can not make a determination on the correctness of the patent term adjustment until the patent has issued.

Requesting reconsideration of the patent term adjustment to be indicated on the patent under 37 CFR 1.705(b) based on the initial determination of patent term adjustment and a projected issuance date of the patent (or even the filing date of the request for continued examination) is premature. Accordingly, it is appropriate to dismiss as premature such a request.

Rather than file a request for reconsideration of patent term adjustment under 37 CFR 1.705(b) contesting the 37 CFR 1.702(b) calculation at the time of the mailing of the notice of allowance, applicants are advised that they may wait until the time of the issuance of the patent and file a request for reconsideration of the patent term adjustment pursuant to 37 CFR 1.705(d). As the USPTO does not calculate the amount of time earned pursuant to 37 CFR 1.702(b) until the time of the issuance of the patent, the Office will consider any request for reconsideration of the patent term adjustment due to an error in the calculation of 37 CFR 1.702(b) to be timely if the request for reconsideration is filed within two months of the issuance of the patent. However, as to all other bases for contesting the initial determination of patent term adjustment received with the notice of allowance, applicant must timely file an application for patent term adjustment prior to the payment of the issue fee[1].

In view thereof, the correct determination of PTA prior to issuance is **seven hundred forty-eight (748) days** (869 days of PTO delay, reduced by 121 days of Applicant delay).

The $200.00 fee set forth in 37 CFR 1.18(e) has been charged to Deposit Account No. 10-0750, as authorized.

The application is being forwarded to the Office of Data Management for issuance of the patent.

Telephone inquiries specific to this decision should be directed to Petitions Attorney Cliff Congo at (571) 272-3207.

Anthony Knight
Director
Office of Petitions

[1] For example, if applicant disputes both the calculation of patent term adjustment under 37 CFR 1.702(a)(1) for Office failure to mail a first Office action or notice of allowance not later than fourteen months after the date on which the application was filed and under 37 CFR 1.702(b) for Office failure to issue a patent within three years of the actual filing date of the application, then applicant must still timely file an application for patent term adjustment prior to the payment of the issue fee to contest the calculation of Office delay in issuing a first Office action or notice of allowance. See 37 CFR 1.705(b) and 35 U.S.C. 154(b)(3)(B). A dispute as to the calculation of the §1.702(a)(1) period raised on request for reconsideration of patent term adjustment under 37 CFR 1.705(d) will be dismissed as untimely filed.

UNITED STATES PATENT AND TRADEMARK OFFICE

Commissioner for Patents
United States Patent and Trademark Office
P.O. Box 1450
Alexandria, VA 22313-1450
www.uspto.gov

OFFICE OF THE ASSOC. GEN. COUNSEL (IP & T)
9800 SAVAGE ROAD
SUITE 6542
FORT MEADE MD 20755-6542

MAILED

APR 08 2011

OFFICE OF PETITIONS

In re Application of	:	
Isreal et al.	:	
Application No.: 11/268411	:	DECISION ON
Filing or 371(c) Date: 11/02/2005	:	PETITION
Title of Invention:	:	
METHOD OF SECURE FILE TRANSFER	:	

This is a decision in response to the petition under 37 CFR § 1.181, to withdraw the holding of abandonment, filed February 7, 2011.

This Petition is hereby **granted**.

The record reflects that a non-final Office action was mailed on July 21, 2009, providing a shortened statutory period for reply of three (3) months from its mailing date. Extensions of time were available under 37 CFR 1.136(a). The record reflects that on August 17, 2009, and December 8, 2009, petitioner filed terminal disclaimers to overcome a double patenting rejection in response to the Office action; however, the terminal disclaimers were disapproved. The application was held abandoned on December 22, 2009. A Notice of Abandonment was mailed February 22, 2010.

Petitioner files the present petition and asserts that the holding of abandonment was improperly imposed because bona fide responses to the non-final Office action were filed within the statutory period for reply.

A review of the terminal disclaimer, filed December 8, 2009, as confirmed by a supervisor in the Office of Petitions, reveals the terminal disclaimer filed December 8, 2009 was a proper terminal disclaimer and should have been entered into the record. The terminal disclaimer was accompanied by an extension of time within the second month and was, therefore, a timely response to the Office action. The holding of abandonment was improperly imposed because a complete and proper (timely) response to the Office action was filed prior to the expiration of the statutory period for reply. The holding of abandonment is properly withdrawn.

The application file is being referred to Technology Center Art Unit 2439 for further processing in the normal course of business.

Telephone inquiries concerning this matter should be directed to the undersigned at (571) 272-3232.

/DLW/

Derek L. Woods
Attorney
Office of Petitions

UNITED STATES PATENT AND TRADEMARK OFFICE

Commissioner for Patents
United States Patent and Trademark Office
P.O. Box 1450

MAILED
JUL 22 2011
OFFICE OF PETITIONS

ROSENBERG, KLEIN & LEE
3458 ELLICOTT CENTER DRIVE-SUITE 101
ELLICOTT CITY MD 21043

In re Patent No. 7,124,880	:	
Issue Date: October 24, 2006	:	ON PETITION
Application No. 11/268,461	:	
Filed: November 8, 2005	:	

This is a decision on the petition under 37 CFR 1.378(c), filed April 21, 2011, to accept the unintentionally delayed payment of a maintenance fee for the above-identified patent.

The petition is **GRANTED**.

This patent expired on October 25, 2010 for failure to pay the three and one-half year maintenance fee. Since this petition was submitted within twenty-four months after the six-month grace period provided in 37 CFR 1.362(e), the petition was timely filed under the provisions of 37 CFR 1.378(c).

The maintenance fee is hereby accepted and the above-identified patent is reinstated as of the mailing date of this decision.

Petitioner has appointed a representative to conduct all business before the Patent and Trademark Office (Office). The Office will not engage in dual correspondence with petitioner and petitioner's representative. Accordingly, petitioner must conduct all future correspondence with this Office through the representative of record. If petitioner no longer wishes to be represented by the representative of record, then a revocation of the power of attorney or authorization of agent must be submitted. A correspondence address must be included on the correspondence instructing the Office where all future communications should be mailed.

Telephone inquiries relating to this decision should be directed to Robert DeWitty, Petitions Examiner, Office of Petitions (571-272-8427).

Rajneesh Krishnamurthy

for Anthony Knight
Director
Office of Petitions

cc: Shih-Ming Lee
No. 19, Dayuan 25th St.
Taiping City
Taichung County 411
Taiwan R.O.C.

UNITED STATES PATENT AND TRADEMARK OFFICE

UNITED STATES DEPARTMENT OF COMMERCE
United States Patent and Trademark Office
Address: COMMISSIONER FOR PATENTS
P.O. Box 1450
Alexandria, Virginia 22313-1450
www.uspto.gov

STANZIONE & KIM, LLP
919 18TH STREET, N.W.
SUITE 440
WASHINGTON, DC 20006

Mail Date: 08/04/2010

Applicant	: Won-ho Song	: DECISION ON REQUEST FOR
Patent Number	: 7663781	: RECALCULATION of PATENT
Issue Date	: 02/16/2010	: TERM ADJUSTMENT IN VIEW
Application No	: 11/268,465	: OF WYETH AND NOTICE OF INTENT TO
Filed	: 11/08/2005	: ISSUE CERTIFICATE OF CORRECTION
		:

The Request for Recalculation is **GRANTED** to the extent indicated.

The patent term adjustment has been determined to be **957** days. The USPTO will *sua sponte* issue a certificate of correction reflecting the amount of PTA days determined by the recalculation.

Prior to the issuance of the certificate of correction, the USPTO will afford patentee an opportunity to be heard and request reconsideration. Accordingly, patentee has **one month or thirty (30) days**, whichever is longer, to file a request for reconsideration of this patent term adjustment calculation. See 35 U.S.C. 154(b)(3)(B)(ii) and 37 CFR 1.322(a)(4). No extensions of time will be granted under 37 CFR 1.136.

Patentee should use document code PET.OP if electronically filing a request for reconsideration of this patent term adjustment calculation. The patentee must also include the information required by 37 CFR 1.705(b)(2) and the fee required by 37 CFR 1.18(e). If patentee does not file a timely request for reconsideration of this patent term adjustment calculation including the information required by 37 CFR 1.705(b)(2) and the fee required by 37 CFR 1.18(e), the USPTO will issue a certificate of correction reflecting the PTA determination noted above.

Patentee should be aware that in order to preserve the right to review in the United States District Court for the District of Columbia of the USPTO patent term adjustment determination, patentee must ensure that he or she also take the steps required under 35 U.S.C. 154(b)(4)(A) in a timely manner. Nothing in the request for recalculation should be construed as providing an alternative time frame for commencing a civil action under 35 U.S.C. 154(b)(4)(A).

Any questions concerning this decision should be directed to the Office of Patent Legal Administration at 571-272-7702.

Doc Code: PET.PTA.RCAL
Document Description: Request for Recalculation in view of Wyeth

PTO/SB/131 (02-10)
Approved for use through 07/31/2010. OMB 0651-0020
U.S. Patent and Trademark Office; U. S. DEPARTMENT OF COMMERCE
Under the Paperwork Reduction Act of 1995, no persons are required to respond to a collection of information unless it displays a valid OMB control number.

REQUEST FOR RECALCULATION OF PATENT TERM ADJUSTMENT IN VIEW OF *WYETH**

Attorney Docket Number: IDR-038US	
Application Number: 11/268,683	Filing Date (or 371(b) or (f) Date): 11/07/2005
Patent Number: 7,470,674	Issue Date: 12/30/2008
First Named Inventor: Sudhir Agrawal	
Title: Immunostimulatory properties of oligonucleotide-based compounds comprising modified immunostimulatory dinucleotides	

PATENTEE HEREBY REQUESTS RECALCULATION OF THE PATENT TERM ADJUSTMENT (PTA) UNDER 35 USC 154(b) INDICATED ON THE ABOVE-IDENTIFIED PATENT. THE PATENTEE'S SOLE BASIS FOR REQUESTING THE RECALCULATION IS THE USPTO'S PRE-*WYETH* INTERPRETATION OF 35 U.S.C. 154(b)(2)(A).

Note: This form is only for requesting a recalculation of PTA for patents issued before March 2, 2010, if the sole basis for requesting the recalculation is the USPTO's pre-*Wyeth* interpretation of 35 U.S.C. 154(b)(2)(A). See Instruction Sheet on page 2 for more information.

Patentees are reminded that to preserve the right to review in the United States District Court for the District of Columbia of the USPTO's patent term adjustment determination, a patentee must ensure that he or she also takes the steps required under 35 U.S.C. 154(b)(3) and (b)(4) and 37 CFR 1.705 in a timely manner.

**Wyeth v. Kappos*, No. 2009-1120 (Fed. Cir., Jan. 7, 2010).

Signature /Wayne A. Keown/	Date 09/07/2010
Name (Print/Typed) Wayne A. Keown	Registration Number 33923

***Note**: Signatures of all the inventors or assignees of record of the entire interest or their representative(s) are required in accordance with 37 CFR 1.33 and 11.18. Please see 37 CFR 1.4(d) for the form of the signature. If necessary, submit multiple forms for more than one signature, see below**.*

☐ *Total of _____ forms are submitted.

The information is required to obtain or retain a benefit by the public which is to file (and by the USPTO to process) an application. Confidentiality is governed by 35 U.S.C. 122 and 37 CFR 1.11 and 1.14. This collection is estimated to take 10 minutes to complete, including gathering, preparing, and submitting the completed application form to the USPTO. Time will vary depending upon the individual case. Any comments on the amount of time you require to complete this form and/or suggestions for reducing this burden, should be sent to the Chief Information Officer, U.S. Patent and Trademark Office, U.S. Department of Commerce, P.O. Box 1450, Alexandria, VA 22313-1450. DO NOT SEND FEES OR COMPLETED FORMS TO THIS ADDRESS. **SEND TO: Commissioner for Patents, P.O. Box 1450, Alexandria, VA 22313-1450.**

If you need assistance in completing the form, call 1-800-PTO-9199 and select option 2.

Under the Paperwork Reduction Act of 1995, no persons are required to respond to a collection of information unless it displays a valid OMB control number.

Instruction Sheet for: REQUEST FOR RECALCULATION OF PATENT TERM ADJUSTMENT IN VIEW OF *WYETH**

(Not to be Submitted to the USPTO)

This form is only for requesting a recalculation of PTA for patents issued before March 2, 2010, if the sole basis for requesting the recalculation is the USPTO's pre-*Wyeth* interpretation of 35 U.S.C. 154(b)(2)(A).

This form must be filed within 180 days of the day the patent was granted, with the following exception:

> Patentees who received a decision from the USPTO under the USPTO's pre-Wyeth interpretation of 35 U.S.C. 154(b)(2)(A) may file a request for reconsideration of that decision if such a request for reconsideration is filed within **two months** of the date of the decision (37 CFR 1.181(f)). If the patentee's sole basis for requesting reconsideration of the decision is the USPTO's pre-Wyeth interpretation of 35 U.S.C. 154(b)(2)(A), the request for reconsideration need only state that reconsideration is being requested in view of Wyeth (this form may be used for this purpose if it is filed within **two months** of the date of the decision from the USPTO).

Do not use this form if the application has been allowed, but not yet issued as a patent.

1. **For patents issued before March 2, 2010:** A request for reconsideration under 37 CFR 1.705(d) and the fee set forth in 37 CFR 1.18(e) are not required, provided that the patentee's sole basis for requesting recalculation of the PTA in the patent is the USPTO's pre-*Wyeth* interpretation of 35 U.S.C. 154(b)(2)(A) and this form is filed within 180 days of the day the patent was granted.

2. **For patents issued on or after March 2, 2010 (do not use this form):** Patentees seeking a revised PTA in a patent issued on or after March 2, 2010, must file a request for reconsideration under 37 CFR 1.705(d) that complies with the requirements of 37 CFR 1.705(b)(1) and (b)(2) within two months of the day the patent issued.

For more information, see "Notice Concerning Calculation of the Patent Term Adjustment With Respect to the Overlapping Delay Provision of 35 U.S.C. 154(b)(2)(A)" available on the USPTO Web site at http://www.uspto.gov/patents/law/notices/2010.jsp.

**Wyeth v. Kappos*, No. 2009-1120 (Fed. Cir., Jan. 7, 2010).

Privacy Act Statement

The **Privacy Act of 1974 (P.L. 93-579)** requires that you be given certain information in connection with your submission of the attached form related to a patent application or patent. Accordingly, pursuant to the requirements of the Act, please be advised that: (1) the general authority for the collection of this information is 35 U.S.C. 2(b)(2); (2) furnishing of the information solicited is voluntary; and (3) the principal purpose for which the information is used by the U.S. Patent and Trademark Office is to process and/or examine your submission related to a patent application or patent. If you do not furnish the requested information, the U.S. Patent and Trademark Office may not be able to process and/or examine your submission, which may result in termination of proceedings or abandonment of the application or expiration of the patent.

The information provided by you in this form will be subject to the following routine uses:

1. The information on this form will be treated confidentially to the extent allowed under the Freedom of Information Act (5 U.S.C. 552) and the Privacy Act (5 U.S.C 552a). Records from this system of records may be disclosed to the Department of Justice to determine whether disclosure of these records is required by the Freedom of Information Act.
2. A record from this system of records may be disclosed, as a routine use, in the course of presenting evidence to a court, magistrate, or administrative tribunal, including disclosures to opposing counsel in the course of settlement negotiations.
3. A record in this system of records may be disclosed, as a routine use, to a Member of Congress submitting a request involving an individual, to whom the record pertains, when the individual has requested assistance from the Member with respect to the subject matter of the record.
4. A record in this system of records may be disclosed, as a routine use, to a contractor of the Agency having need for the information in order to perform a contract. Recipients of information shall be required to comply with the requirements of the Privacy Act of 1974, as amended, pursuant to 5 U.S.C. 552a(m).
5. A record related to an International Application filed under the Patent Cooperation Treaty in this system of records may be disclosed, as a routine use, to the International Bureau of the World Intellectual Property Organization, pursuant to the Patent Cooperation Treaty.
6. A record in this system of records may be disclosed, as a routine use, to another federal agency for purposes of National Security review (35 U.S.C. 181) and for review pursuant to the Atomic Energy Act (42 U.S.C. 218(c)).
7. A record from this system of records may be disclosed, as a routine use, to the Administrator, General Services, or his/her designee, during an inspection of records conducted by GSA as part of that agency's responsibility to recommend improvements in records management practices and programs, under authority of 44 U.S.C. 2904 and 2906. Such disclosure shall be made in accordance with the GSA regulations governing inspection of records for this purpose, and any other relevant (*i.e.*, GSA or Commerce) directive. Such disclosure shall not be used to make determinations about individuals.
8. A record from this system of records may be disclosed, as a routine use, to the public after either publication of the application pursuant to 35 U.S.C. 122(b) or issuance of a patent pursuant to 35 U.S.C. 151. Further, a record may be disclosed, subject to the limitations of 37 CFR 1.14, as a routine use, to the public if the record was filed in an application which became abandoned or in which the proceedings were terminated and which application is referenced by either a published application, an application open to public inspection or an issued patent.
9. A record from this system of records may be disclosed, as a routine use, to a Federal, State, or local law enforcement agency, if the USPTO becomes aware of a violation or potential violation of law or regulation.

UNITED STATES PATENT AND TRADEMARK OFFICE

UNITED STATES DEPARTMENT OF COMMERCE
United States Patent and Trademark Office
Address: COMMISSIONER FOR PATENTS
P.O. Box 1450
Alexandria, Virginia 22313-1450
www.uspto.gov

Joseph C. Zucchero
Keown & Associates
Suite 1200
500 West Cummings Park
Woburn, MA 01801

Mail Date: 09/14/2010

Applicant	: Sudhir Agrawal	: DECISION ON REQUEST FOR
Patent Number	: 7470674	: RECALCULATION of PATENT
Issue Date	: 12/30/2008	: TERM ADJUSTMENT IN VIEW
Application No	: 11/268,683	: OF WYETH
Filed	: 11/07/2005	:
		:

The Patentee's Request for Recalculation is **DISMISSED.**

This Request is deemed ineligible for consideration for one or more of the following reasons:

(A). The patent for which PTA recalculation is requested is either a design or reissue application or is a reexamination proceeding;

(B). The patent for which PTA recalculation is requested resulted from a utility or plant application filed under 35 USC 111(a) before May 29, 2000 and no CPA filed in the application on/after May 29, 2000;

(C). The patent for which PTA recalculation is requested resulted from an international application in which the international filing date was before May 29, 2000 and no CPA filed in the application on/after May 29, 2000;

(D). The patent for which PTA recalculation is requested issued on/after March 2, 2010;

(E). The Request for Recalculation was filed more than 180 days after the grant date of the patent and the request was not filed within two months of a dismissal of a request for reconsideration of the of the patent term under 37 CFR 1.705(d);

(F). The Request for Recalculation is not solely limited to USPTO pre-Wyeth interpretation of 35 U.S.C. 154(b)(2)(A);

or

(G). A civil action was filed pursuant to 35 U.S.C. 154(b)(4)(A)concerning the same patent at issue in this request.

Patentee may file a reply to this decision dismissing the Request for Recalculation. Patentee must file such reply within one month or thirty days, whichever is longer, of the mail date of the decision dismissing the Request for Recalculation. No fee is required if patentee is asserting in the reply that the dismissal for ineligibility is improper.

Patentee should use document code PET.OP if electronically filing a reply to this dismissal. If the USPTO finds that the request was improperly deemed ineligible, the USPTO will mail applicant a recalculation determination.

Patentee should be aware that in order to preserve the right to review in the United States District Court for the District of Columbia of the USPTO patent term adjustment determination, patentee must ensure that he or she also take the steps required under 35 U.S.C. 154(b)(4)(A). Nothing in the request for recalculation should be construed as providing an alternative time frame for commencing a civil action under 35 U.S.C. 154 (b)(4)(A).

Any questions concerning this decision should be directed to the Office of Patent Legal Administration at 571-272-7702.

UNITED STATES PATENT AND TRADEMARK OFFICE

Commissioner for Patents
United States Patent and Trademark Office
P.O. Box 1450
Alexandria, VA 22313-1450
www.uspto.gov

THOMPSON E. FEHR
5025 ADAMS AVENUE
SUITE 300
OGDEN UT 84403

MAILED

DEC 06 2011

OFFICE OF PETITIONS

In re Application of :
HAMPLE et al. :
Application No. 11/268,693 : DECISION ON PETITION
Filed: 11/07/2005 :
Attorney Docket No. 3561.2.1 :

This is decision on the petition under 37 CFR 1.137(b), filed November 9, 2011, to revive the above-identified application.

The petition is **GRANTED.**

The application became abandoned as a result of petitioner's failure to file an appeal brief (and fee required by 37 CFR 41.20(b)(2)) within the time period provided in 37 CFR 41.37(a)(1). As an appeal brief (and appeal brief fee) was not filed within two (2) months of the Notice of Appeal filed December 23, 2010, and no extensions of time under the provisions of 37 CFR 1.136(a) were obtained, the appeal was dismissed and the proceedings as to the rejected claims were terminated. See 37 CFR 1.197(b). As no claim was allowed, the application became abandoned on February 24, 2011. See MPEP 1215.04. A Notice of Abandonment was mailed on August 10, 2011.

The petition satisfies the requirements of 37 CFR 1.137(b) in that petitioner has supplied (1) the reply in the form of an appeal brief; (2) the petition fee; and (3) a proper statement of unintentional delay.

The application is being referred to Technology Center Art Unit 2159.

Telephone inquiries related to this decision should be directed to the undersigned at (571) 272-3211.

C. T. Donnell

Christina Tartera Donnell
Senior Petitions Attorney
Office of Petitions

UNITED STATES PATENT AND TRADEMARK OFFICE

Commissioner for Patents
United States Patent and Trademark Office
P.O. Box 1450
Alexandria, VA 22313-1450
www.uspto.gov

OFFICE OF THE ASSOC. GEN. COUNSEL (IP & T)
9800 SAVAGE ROAD
SUITE 6542
FORT MEADE MD 20755-6542

MAILED

SEP 23 2010

OFFICE OF PETITIONS

In re Application of :
Israel, et al. :
Application No. 11/268,756 : ON PETITION
Filed: November 2, 2005 :
Attorney Docket No. Israel 1-1-1-1

This is a decision on the petition to withdraw the holding of abandonment filed on March 9, 2010.

The petition is **DISMISSED**.

The record reflects that a non-final Office action was mailed on July 21, 2009, allowing a shortened statutory period for reply of three months from its mailing date. Extensions of the time set for reply were available pursuant to 37 CFR 1.136(a). The record reflects that on August 17, 2009, and December 8, 2009, petitioner filed terminal disclaimers to overcome a double patenting rejection. The terminal disclaimers were disapproved, however. The application became abandoned on December 22, 2009. A Notice of Abandonment was mailed February 22, 2010.

The instant petition was then filed on March 9, 2010, wherein petitioner asserts that the holding of abandonment was improperly imposed because bona fide responses to the non-final Office action were filed within the statutory period for reply. Petitioner's argument is not persuasive.

A review of the non-final Office action mailed July 21, 2009, reveals that it states, in pertinent part, that, "[a] timely filed terminal disclaimer in compliance with 37 CFR 1.321(c) or 1.321(d) may be used to overcome an actual or provisional rejection based on a nonstatutory double patenting ground provided the conflicting application or patent either is shown to be commonly owned with this application, or claims an invention made as a result of activities undertaken within the scope of a joint research agreement." Both terminal disclaimer filed within the statutory period for reply to the non-final Office action were disapproved and deemed not to be compliant with 37 CFR 1.321(c) and/or 1.321(d). Applicants are charged with a filing a proper and timely response to all Office actions issued. If a reply is determined to be improper, such does not toll any time period running against the application. Accordingly, the petition to withdraw the holding of abandonment must be dismissed as petitioner has not established that a proper response to the non-final Office action was filed within the maximum statutory period for reply.

Alternatively, petitioner may revive the application based on unintentional abandonment under 37 CFR 1.137(b). A grantable petition pursuant to 37 CFR 1.137(b) must be accompanied by the required reply, the required petition fee ($1620.00 for a large entity and $810.00 for a verified small entity), and a statement that the entire delay in filing the required reply from the due date for the reply until the filing of a grantable petition pursuant to 37 CFR 1.137(b) was unintentional.

Further correspondence with respect to this matter should be addressed as follows:

By mail: Commissioner for Patents
United States Patent and Trademark Office
Box 1450
Alexandria, VA 22313-1450

By facsimile: (571) 273-8300
Attn: Office of Petitions

Telephone inquiries regarding this decision should be directed to the undersigned (571) 272-3222.

/Kenya A. McLaughlin/

Kenya A. McLaughlin
Petitions Attorney
Office of Petitions

UNITED STATES PATENT AND TRADEMARK OFFICE

Commissioner for Patents
United States Patent and Trademark Office
P.O. Box 1450
Alexandria, VA 22313-1450
www.uspto.gov

OFFICE OF THE ASSOC. GEN. COUNSEL (IP & T)
9800 SAVAGE ROAD
SUITE 6542
FORT MEADE MD 20755-6542

MAILED
OCT 06 2010
OFFICE OF PETITIONS

In re Application of :
Israel, et al. :
Application No. 11/268,756 : ON PETITION
Filed: November 2, 2005 :
Attorney Docket No. Israel 1-1-1-1

This is a decision on the petition to withdraw the holding of abandonment filed on March 9, 2010.

The decision mailed September 23, 2010, is **VACATED**.

The petition under 37 CFR 1.181(a) to withdraw the holding of abandonment is **granted**[1].

The record reflects that a non-final Office action was mailed on July 21, 2009, allowing a shortened statutory period for reply of three months from its mailing date. Extensions of the time set for reply were available pursuant to 37 CFR 1.136(a). The record reflects that on August 17, 2009, and December 8, 2009, petitioner filed terminal disclaimers to overcome a double patenting rejection. The terminal disclaimers were disapproved, however. The application was held abandoned on December 22, 2009. A Notice of Abandonment was mailed February 22, 2010.

The instant petition was then filed on March 9, 2010, wherein petitioner asserts that the holding of abandonment was improperly imposed because bona fide responses to the non-final Office action were filed within the statutory period for reply.

Following consultation with a supervisor in the Office of Petitions, it was determined that the terminal disclaimer filed December 8, 2009, was a proper terminal disclaimer and should have been entered into the record. The terminal disclaimer was accompanied by an extension of time within the second month and was, therefore, a timely response to the non-final Office action. The holding of abandonment was improperly imposed because a proper and timely response was filed prior to the expiration of the statutory period for reply to the non-final Office action. The holding of abandonment is withdrawn accordingly.

[1] Petitioner is advised that no consensus was reached as to whether the governing statute and rules require the Office to inform applicant that a response filed is improper. As such, this decision should not be interpreted as meaning that the failure of the Office to notify petitioner that a response filed is improper is a basis for a grantable petition to withdraw the holding of abandonment. This petition is being granted because a timely filed response was determined to be a proper response after all, not because the Office did not notify petitioner that it deemed the response filed August 17, 2009, and December 8, 2009, to be improper.

The application file is being directed to Technology Center, GAU 2439 for further processing.

Further inquires regarding this decision may be directed to the undersigned at (571) 272-3222.

/Kenya A. McLaughlin/

Kenya A. McLaughlin
Petitions Attorney
Office of Petitions

UNITED STATES PATENT AND TRADEMARK OFFICE

Commissioner for Patents
United States Patent and Trademark Office
P.O. Box 1450
Alexandria, VA 22313-1450
www.uspto.gov

FITCH EVEN TABIN & FLANNERY
120 SOUTH LASALLE STREET
SUITE 1600
CHICAGO IL 60603-3406

MAILED

JAN 25 2011

OFFICE OF PETITIONS

In re Application of

Eric K. Y. Chan, et al.
Application No. 11/268,941
Filed: November 8, 2005
Attorney Docket No. 6870/85981

DECISION ON PETITION
TO WITHDRAW
FROM RECORD

This is a decision on the Request to Withdraw as attorney or agent of record under 37 C.F.R. § 1.36(b), filed December 20, 2010.

The request is **NOT APPROVED**.

The Office will not decide request to withdraw from representation as practitioner of record which are filed after the patent has issued. Sections 2540 and 2542 of the Manuel of Patent Procedures (MPEP explain that a practitioner does not have to request permission to withdraw as practitioner of record under 37 CFR 1.36 in order to change the address in a patented filed and to directed notices, receipts and other communications relating to maintenance fees. These requests will be placed in the application but will not be treated on their merits. The above mentioned sections of the MPEP recommend the designation of a fee address or submission of a change in correspondence address in the patented file for directing correspondence relating to maintenance fee payments and other correspondences after issuance. See Form PTO/SB/47, entitled, *"Fee Address" Indication Form* and Form PTO/SB/123, entitled, *Change of Correspondence Address, Patent*

Accordingly, the request to withdraw from record cannot be approved because the request was filed after the application was abandoned.

All future communications from the Office will continue to be directed to the address of record until otherwise notified by applicant.

Telephone inquiries concerning this decision should be directed to undersigned at 571-272-1642.

/AMW/
April M. Wise
Petitions Examiner
Office of Petitions

cc: JOE LOEFFLER
CARDIMA, INC.
47266 BENICIA STREET
FREEMONT, CA 94538-7330

UNITED STATES PATENT AND TRADEMARK OFFICE

Commissioner for Patents
United States Patent and Trademark Office
P.O. Box 1450
Alexandria, VA 22313-1450
www.uspto.gov

MCANDREWS HELD & MALLOY, LTD
500 WEST MADISON STREET, SUITE 3400
CHICAGO, IL 60661

MAILED

AUG 20 2010

OFFICE OF PETITIONS

In re Application of
Jonathan F. LEE, et *al.*
Application No. 11/269,064
Filed: November 8, 2005
Attorney Docket No. **16854US01**

DECISION GRANTING PETITION
UNDER 37 CFR 1.313(c)(2)

This is a decision on the petition under 37 CFR 1.313(c)(2), filed August 20, 2010, to withdraw the above-identified application from issue after payment of the issue fee.

The petition is **GRANTED**.

The above-identified application is withdrawn from issue for consideration of a submission under 37 CFR 1.114 (request for continued examination). *See* 37 CFR 1.313(c)(2).

Petitioner is advised that the issue fee paid on June 24, 2010 cannot be refunded. If, however, this application is again allowed, petitioner may request that it be applied towards the issue fee required by the new Notice of Allowance.[1]

Telephone inquiries should be directed to the undersigned at (571) 272-7253.

This application is being referred to Technology Center AU 2115 for processing of the request for continued examination under 37 CFR 1.114 and for consideration of the concurrently filed information disclosure statement.

/Monica A. Graves/
Petitions Examiner, Office of Petitions

[1] *The request to apply the issue fee to the new Notice may be satisfied by completing and returning the new Part B – Fee(s) Transmittal Form (along with any balance due at the time of submission). Petitioner is advised that the Issue Fee Transmittal Form* ***must*** *be completed and timely submitted to avoid abandonment of the application.*

UNITED STATES DEPARTMENT OF COMMERCE
U.S. Patent and Trademark Office
Address : COMMISSIONER FOR PATENTS
P.O. Box 1450
Alexandria, Virginia 22313-1450

APPLICATION NO./ CONTROL NO.	FILING DATE	FIRST NAMED INVENTOR / PATENT IN REEXAMINATION	ATTORNEY DOCKET NO.
11/269,094	08 November, 2005	DETLEF ET AL.	M0002-1008

		EXAMINER	
ROBERT PLOTKIN, PC 15 New England Executive Office Park Burlington, MA 01803		RICHEMOND DORVIL	
		ART UNIT	PAPER
		2626	20120119

DATE MAILED:

Please find below and/or attached an Office communication concerning this application or proceeding.

Commissioner for Patents

/Richemond Dorvil/ Supervisory Patent Examiner, Art Unit 2626	Richemond Dorvil SPE Art Unit: 2626

Newsome, Lamonte

From: Newsome, Lamonte
Sent: Monday, January 09, 2012 4:05 PM
To: Dorvil, Richemond
Subject: 11269094
Attachments: SPE's Reponse 9-19-11.doc

Please review the attached document.

Examiner/SPE:

- Read the request from the attorney/applicant dated ___01/05/12_____
  - Print out the IMIS and indicate your approval, approval in part (please indicate what is denied and what is approved), or denial of the request and sign
  - Send the IMIS for scanning under the code COCX
  - Send me an email indicating that you've sent the COCX and I will look for your decision.

Thank you, I'm looking forward to hearing from you.

Lamonte M. Newsome

Certificate of Corrections

571-272-3421 (Voice)

571-273-3421 (Fax)

SPE RESPONSE FOR CERTIFICATE OF CORRECTION

DATE : 01/09/11

TO SPE OF : ART UNIT 2626

SUBJECT : Request for Certificate of Correction for Appl. No.: 11269094 Patent No.: 7640158

CofC mailroom date: 01/05/12

Please respond to this request for a certificate of correction within 7 days.

FOR IFW FILES:

Please review the requested changes/corrections as shown in the **COCIN** document(s) in the IFW application image. No new matter should be introduced, nor should the scope or meaning of the claims be changed.

Please complete the response (see below) and forward the completed response to scanning using document code **COCX**.

FOR PAPER FILES:

Please review the requested changes/corrections as shown in the attached certificate of correction. Please complete this form (see below) and forward it with the file to:

Certificates of Correction Branch (CofC)
Randolph Square – 9D10-A
Palm Location 7580
[redacted]

Note: **Should the changes in fig. 3B be approved?**

Lamonte Newsome

Certificates of Correction Branch

571-272-3421

Thank You For Your Assistance

The request for issuing the above-identified correction(s) is hereby:
Note your decision on the appropriate box.

SPE RESPONSE FOR CERTIFICATE OF CORRECTION

☒ **Approved** — **All** changes apply.

☐ **Approved in Part** — Specify below which changes **do not** apply.

☐ **Denied** — State the reasons for denial below.

Comments: _____

/Richemond Dorvil/ — 2626

SPE — **Art Unit**

UNITED STATES PATENT AND TRADEMARK OFFICE

Commissioner for Patents
United States Patent and Trademark Office
P.O. Box 1450
Alexandria, VA 22313-1450
www.uspto.gov

MAILED

APR 08 2011

OFFICE OF PETITIONS

BUSINESS OBJECTS AMERICAS; BUSINESS OBJECTS S.A.
SAP AMERICA, INC.; BUSINESS OBJECTS SOFTWARE LTD.
BUSINESS OBJECTS DATA INTEGRATION, INC.
777 6TH STREET NW, SUITE 1100, ATTN: B. GALLIANI
WASHINGTON DC 20001

In re Application of	:	
POLO-MALOUVIER, et al	:	
Application No. 11/269,145	:	DECISION ON PETITION
Filed: November 7, 2005	:	TO WITHDRAW
Attorney Docket No. BOBJ-075/00US 304661-2148	:	FROM RECORD

This is a decision on the Request to Withdraw as attorney or agent of record under 37 C.F.R. § 1.36(b), filed February 17, 2011.

The request is **NOT APPROVED.**

The Office will either change the correspondence address of record to the most current address information provided for a new practitioner or law firm who has filed a proper power of attorney, the assignee of the entire interest who properly became of record under 37 CFR 3.71 or, if no assignee of the entire interest has properly been made of record under 37 CFR 3.71, the most current address information provided for the first named inventor.

Accordingly, since the change of correspondence address is not that of a new practitioner or law firm who has filed a proper power of attorney in the Office, the request to withdraw from record cannot be approved.

All future communications from the Office will continue to be directed to the above-identified address until otherwise properly notified.

Telephone inquiries concerning this decision should be directed to the undersigned at (571) 272- 6735.

/Diane C. Goodwyn/
Diane C. Goodwyn
Petitions Examiner
Office of Petitions

PTO/SB/66 (03-09)
Approved for use through 03/31/2012. OMB 0651-0016
U.S. Patent and Trademark Office: U.S. DEPARTMENT OF COMMERCE
Under the Paperwork Reduction Act of 1995, no persons are required to respond to a collection of information unless it displays valid OMB control number.

PETITION TO ACCEPT UNINTENTIONALLY DELAYED PAYMENT OF MAINTENANCE FEE IN AN EXPIRED PATENT (37 CFR 1.378(c))

Patent Number	Issue Date (YYYY-MM-DD)	Application Number	Filing Date (YYYY-MM-DD)	Docket Number (if applicable)
7,227,158	2007-06-05	11/269,147	2005-11-08	27845-19

CAUTION: Maintenance fee (and surcharge, if any) payment must correctly identify: (1) the patent number and (2) the application number of the actual U.S. application leading to issuance of that patent to ensure the fee(s) is/are associated with the correct patent. 37 CFR 1.366(c) and (d).

SMALL ENTITY
☒ Patentee claims, or has previously claimed, small entity status. See 37 CFR 1.27.

LOSS OF ENTITLEMENT TO SMALL ENTITY STATUS
☐ Patentee is no longer entitled to small entity status. See 37 CFR 1.27(g)

NOT Small Entity		Small Entity	
Fee	Code	Fee	Code
○ 3 ½ year	(1551)	● 3 ½ year	(2551)
○ 7 ½ year	(1552)	○ 7 ½ year	(2552)
○ 11 ½ year	(1553)	○ 11 ½ year	(2553)

SURCHARGE
The surcharge required by 37 CFR 1.20(i)(2) (Fee Code 1558) must be paid as a condition of accepting unintentionally delayed payment of the maintenance fee.

MAINTENANCE FEE (37 CFR 1.20(e)-(g))
The appropriate maintenance fee must be submitted with this petition.

STATEMENT
THE UNDERSIGNED CERTIFIES THAT THE DELAY IN PAYMENT OF THE MAINTENANCE FEE TO THIS PATENT WAS UNINTENTIONAL

PETITIONER(S) REQUEST THAT THE DELAYED PAYMENT OF THE MAINTENANCE FEE BE ACCEPTED AND THE PATENT REINSTATED

THIS PORTION MUST BE COMPLETED BY THE SIGNATORY OR SIGNATORIES

37 CFR 1.378(d) states: "Any petition under this section must be signed by an attorney or agent registered to practice before the Patent and Trademark Office, or by the patentee, the assignee, or other party in interest."

I certify, in accordance with 37 CFR 1.4(d)(4) that I am

- ● An attorney or agent registered to practice before the Patent and Trademark Office
- ○ A sole patentee
- ○ A joint patentee; I certify that I am authorized to sign this submission on behalf of all the other patentees.
- ○ A joint patentee; all of whom are signing this e-petition
- ○ The assignee of record of the entire interest

Under the Paperwork Reduction Act of 1995, no persons are required to respond to a collection of information unless it displays valid OMB control number.

Patent Practitioner			
A signature of the applicant or representative is required in accordance with 37 CFR 1.33 and 10.18. Please see 37 CFR 1.4(d) for the form of the signature			
Signature	/Joseph T. Guy/	Date (YYYY-MM-DD)	2012-02-13
Name	Joseph T. Guy	Registration Number	35172

This collection of information is required by 37 CFR 1.378(c). The information is required to obtain or retain a benefit by the public which is to file (and by the USPTO to process) an application. Confidentiality is governed by 35 U.S.C. 122 and 37 CFR 1.11 and 1.14. This collection is estimated to take 1 hour to complete, including gathering, preparing, and submitting the completed application form to the USPTO. Time will vary depending upon the individual case. Any comments on the amount of time you require to complete this form and/ or suggestions for reducing this burden, should be sent to the Chief Information Officer, U.S. Patent and Trademark Office, U.S. Department of Commerce, P.O. Box 1450, Alexandria, VA 22313-1450. DO NOT SEND FEES OR COMPLETED FORMS TO THIS ADDRESS. **This form can only be used when in conjunction with EFS-Web. If this form is mailed to the USPTO, it may cause delays in reinstating the patent.**

Privacy Act Statement

The Privacy Act of 1974 (P.L. 93-579) requires that you be given certain information in connection with your submission of the attached form related to a patent application or patent. Accordingly, pursuant to the requirements of the Act, please be advised that: (1) the general authority for the collection of this information is 35 U.S.C. 2(b)(2); (2) furnishing of the information solicited is voluntary; and (3) the principal purpose for which the information is used by the U.S. Patent and Trademark Office is to process and/or examine your submission related to a patent application or patent. If you do not furnish the requested information, the U.S. Patent and Trademark Office may not be able to process and/or examine your submission, which may result in termination of proceedings or abandonment of the application or expiration of the patent.

The information provided by you in this form will be subject to the following routine uses:

1. The information on this form will be treated confidentially to the extent allowed under the Freedom of Information Act (5 U.S.C. 552) and the Privacy Act (5 U.S.C. 552a). Records from this system of records may be disclosed to the Department of Justice to determine whether the Freedom of Information Act requires disclosure of these records.

2. A record from this system of records may be disclosed, as a routine use, in the course of presenting evidence to a court, magistrate, or administrative tribunal, including disclosures to opposing counsel in the course of settlement negotiations.

3. A record in this system of records may be disclosed, as a routine use, to a Member of Congress submitting a request involving an individual, to whom the record pertains, when the individual has requested assistance from the Member with respect to the subject matter of the record.

4. A record in this system of records may be disclosed, as a routine use, to a contractor of the Agency having need for the information in order to perform a contract. Recipients of information shall be required to comply with the requirements of the Privacy Act of 1974, as amended, pursuant to 5 U.S.C. 552a(m).

5. A record related to an International Application filed under the Patent Cooperation Treaty in this system of records may be disclosed, as a routine use, to the International Bureau of the World Intellectual Property Organization, pursuant to the Patent Cooperation Treaty.

6. A record in this system of records may be disclosed, as a routine use, to another federal agency for purposes of National Security review (35 U.S.C. 181) and for review pursuant to the Atomic Energy Act (42 U.S.C. 218(c)).

7. A record from this system of records may be disclosed, as a routine use, to the Administrator, General Services, or his/her designee, during an inspection of records conducted by GSA as part of that agency's responsibility to recommend improvements in records management practices and programs, under authority of 44 U.S.C. 2904 and 2906. Such disclosure shall be made in accordance with the GSA regulations governing inspection of records for this purpose, and any other relevant (i.e., GSA or Commerce) directive. Such disclosure shall not be used to make determinations about individuals.

8. A record from this system of records may be disclosed, as a routine use, to the public after either publication of the application pursuant to 35 U.S.C. 122(b) or issuance of a patent pursuant to 35 U.S.C. 151. Further, a record may be disclosed, subject to the limitations of 37 CFR 1.14, as a routine use, to the public if the record was filed in an application which became abandoned or in which the proceedings were terminated and which application is referenced by either a published application, an application open to public inspections or an issued patent.

9. A record from this system of records may be disclosed, as a routine use, to a Federal, State, or local law enforcement agency, if the USPTO becomes aware of a violation or potential violation of law or regulation.

UNITED STATES PATENT AND TRADEMARK OFFICE

Commissioner for Patents
United States Patent and Trademark Office
P.O. Box 1450
Alexandria, VA 22313-1450
www.uspto.gov

In re Patent No. 7227158
Issue Date: June 5,2007
Application No. 11269147
Filed: November 8,2005
Attorney Docket No. 27845-19

:
:DECISION GRANTING PETITION
:UNDER 37 CFR 1.378(c)
:

This is a decision on the electronic petition, filed February 13,2012 ,under 37 CFR 1.378(c) to accept the unintentionally delayed payment of the 3.5 year maintenance fee for the above-identified patent.

The petition is **GRANTED**.

The maintenance fee is accepted, and the above-identified patent reinstated as of February 13,2012 . This decision also constitutes notice that the fee has been accepted. An electronic copy of the petition and this decision has been created as an entry in the Image File Wrapper. Nevertheless, petitioner should print and retain an independent copy.

Telephone inquiries related to this electronic decision should be directed to the Electronic Business Center at 1-866-217-9197.

UNITED STATES PATENT AND TRADEMARK OFFICE

Commissioner for Patents
United States Patent and Trademark Office
P.O. Box 1450
Alexandria, VA 22313-1450
www.uspto.gov

SULLIVAN & WORCESTER LLP
1666 K Street NW
Washington DC 20006

MAILED

NOV 12 2010

OFFICE OF PETITIONS

In re Application of	:	
Joe V. Travez et al.	:	
Application No. 11/269,583	:	DECISION ON PETITION
Filed: November 9, 2005	:	TO WITHDRAW
Attorney Docket No. 22232.0011	:	FROM RECORD
	:	

This is a decision on the Request to Withdraw as attorney or agent of record under 37 C.F.R. § 1.36(b), filed October 20, 2010.

The request is **APPROVED**.

A grantable request to withdraw as attorney/agent of record must be signed by every attorney/agent seeking to withdraw or contain a clear indication that one attorney is signing on behalf of another/others. A request to withdraw will not be approved unless at least 30 (thirty) days would remain between the date of approval and the later of the expiration date of a time to file a response or the expiration date of the maximum time period which can be extended under 37 C.F.R. § 1.136(a).

The request was signed by John W. Ryan on behalf of all attorneys/agents associated with customer number 44966. All attorneys/agents associated with customer number 44966 have been withdrawn.

The correspondence address has been changed and is copied below.

Telephone inquiries concerning this decision should be directed to Kimberly Inabinet at 571-272-4618.

/Kimberly Inabinet/

Kimberly Inabinet
Petitions Examiner
Office of Petitions

cc: Prototype Productions, Inc.
21641 Beaumeade Circle
Suite 311
Ashburn, VA 20147

UNITED STATES PATENT AND TRADEMARK OFFICE

UNITED STATES DEPARTMENT OF COMMERCE
United States Patent and Trademark Office
Address: COMMISSIONER FOR PATENTS
P.O. Box 1450
Alexandria, Virginia 22313-1450
www.uspto.gov

APPLICATION NUMBER	FILING OR 371(C) DATE	FIRST NAMED APPLICANT	ATTY. DOCKET NO./TITLE
11/269,583	11/09/2005	Joe V. Travez	22232.0011

CONFIRMATION NO. 5805

POWER OF ATTORNEY NOTICE

44966
SULLIVAN & WORCESTER LLP
1666 K Street NW
Washington, DC 20006

OC000000044421265

Date Mailed: 11/09/2010

NOTICE REGARDING CHANGE OF POWER OF ATTORNEY

This is in response to the Power of Attorney filed 10/20/2010.

- The withdrawal as attorney in this application has been accepted. Future correspondence will be mailed to the new address of record. 37 CFR 1.33.

/kainabinet/

Office of Data Management, Application Assistance Unit (571) 272-4000, or (571) 272-4200, or 1-888-786-0101

UNITED STATES PATENT AND TRADEMARK OFFICE

Commissioner for Patents
United States Patent and Trademark Office
P.O. Box 1450
Alexandria, VA 22313-1450
www.uspto.gov

CANTOR COLBURN LLP
20 CHURCH STREET
22ND FLOOR
HARTFORD CT 06103

MAILED
AUG 04 2011
OFFICE OF PETITIONS

In re Application of	:	
Shin Ae Jun et al	:	
Application No. 11/269,685	:	DECISION ON PETITION
Filed: November 9, 2005	:	
Attorney Docket No. PHO0181US	:	

This is a decision on the petition under the unintentional provisions of 37 CFR 1.137(b), filed June 1, 2011 to revive the above-identified application.

The petition is **GRANTED**.

The petition satisfies the conditions for revival pursuant to the provisions of 37 CFR 1.137(b) in that (1) the reply in the form of an RCE and an amendment; (2) the petition fee; and (3) the required statement of unintentional delay have been received. Accordingly, the reply to the final Office action mailed October 1, 2010 (an advisory action was mailed on April 18, 2011), is accepted as having been unintentionally delayed.

Telephone inquiries concerning this decision should be directed to the undersigned at (571) 272-3208.

This application is being referred to Technology Center AU 1731 for appropriate action by the Examiner in the normal course of business.

/KOC/
Karen Creasy
Petitions Examiner
Office of Petitions

UNITED STATES PATENT AND TRADEMARK OFFICE

Commissioner for Patents
United States Patent and Trademark Office
P.O. Box 1450
Alexandria, VA 22313-1450
www.uspto.gov

HOGAN LOVELLS US LLP
IP GROUP, COLUMBIA SQUARE
555 THIRTEENTH STREET, N.W.
WASHINGTON DC 20004

MAILED

OCT 26 2010

OFFICE OF PETITIONS

In re Application of	:	
Yasuyuki Sasada	:	DECISION ON APPLICATION
Application No. 11/269,827	:	FOR PATENT TERM ADJUSTMENT
Filed: November 9, 2005	:	
Attorney Docket No. 19629.0010	:	

This is a decision on the "Application Under 37 CFR 1.705(b) for Reconsideration of Patent Term Adjustment Determination" filed May 28, 2010. Applicant requests the initial determination of patent term adjustment be corrected from five hundred thirty-eight (538) days to eight hundred eighty-seven (887) days.

The application for patent term adjustment is **dismissed**.

The Office mailed a Determination of Patent Term Adjustment under 35 U.S.C. § 154(b) in the above-identified application on March 2, 2010. Applicant was advised of a patent term adjustment to date of 538 days, which is 598 days of delay under 37 C.F.R. § 1.703(a) ("A Delay") reduced by 60 days of delay under 37 C.F.R. § 1.704 ("Applicant Delay"). In response, Applicant timely filed this application for patent term adjustment on May 28, 2010, prior to submitting the issue fee on June 1, 2010.

Applicant asserts the correct patent term adjustment is 887 days, which is the sum of 598 days of A Delay and 289 days of delay under 37 C.F.R. § 1.703(b) ("B Delay") reduced by 0 days of Applicant Delay.

The Period of B Delay

To the extent Applicant requests reconsideration of the patent term adjustment as it relates to the Office's failure to issue the patent within 3 years of the filing date, the request is premature.

Knowledge of the actual date the patent issues is required to calculate the amount, if any, of additional patent term patentee is entitled to for Office failure to issue the patent within 3 years. *See* 37 C.F.R. § 1.702(b). (This is true even where a request for continued examination (RCE) was filed). The computer will not undertake the 37 C.F.R. § 1.702(b) calculation until the actual

date of issuance of the patent has been determined. Likewise, the computer will not calculate any further Office delay under 37 C.F.R. § 1.702(a)(4) or applicant delay under 37 C.F.R. § 1.704(c)(10) until the actual date of issuance of the patent has been determined. As such, the Office can not make a determination on the correctness of the patent term adjustment until the patent has issued.

Requesting reconsideration of the patent term adjustment to be indicated on the patent under 37 C.F.R. § 1.705(b) based on the initial determination of patent term adjustment and a projected issuance date of the patent (or even the filing date of the request for continued examination) is premature.

Rather than file an application for patent term adjustment under 37 C.F.R. § 1.705(b) contesting the 37 C.F.R. § 1.702(b) calculation at the time of the mailing of the notice of allowance, an applicant may wait until the time of the issuance of the patent and file a request for reconsideration of the patent term adjustment pursuant to 37 C.F.R. § 1.705(d). As the USPTO does not calculate the amount of time earned pursuant to 37 C.F.R. § 1.702(b) until the time of the issuance of the patent, the Office will consider any request for reconsideration of the patent term adjustment due to an error in the calculation of 37 C.F.R. § 1.702(b) to be timely if the request for reconsideration is filed within two months of the issuance of the patent. However, as to all other bases for contesting the initial determination of patent term adjustment received with the notice of allowance, applicant must timely file an application for patent term adjustment prior to the payment of the issue fee.[1]

Any request for reconsideration of the patent term adjustment indicated on the patent must be timely filed within 2 months after issuance pursuant to 37 C.F.R. § 1.705(d) and must include payment of the required fee under 37 C.F.R. § 1.18(e).

The Period of Applicant Delay

Applicant states, "There were no circumstances constituting a failure to engage in reasonable efforts to conclude processing or examination of such application as set forth in § 1.704." However, a review of the record indicates a 60-day reduction is warranted pursuant to 37 C.F.R. § 1.704(b), which states,

> [A]n applicant shall be deemed to have failed to engage in reasonable efforts to conclude processing or examination of an application for the cumulative total of any periods of time in excess of three months that are taken to reply to any notice or action by the Office making any rejection, objection, argument, or other request, measuring such three-month period from the date the notice or action was mailed or given to the

[1] For example, if applicant disputes both the calculation of patent term adjustment under 37 C.F.R. § 1.702(a)(1) for Office failure to mail a first Office action or notice of allowance not later than fourteen months after the date on which the application was filed and under 37 C.F.R. § 1.702(b) for Office failure to issue a patent within three years of the actual filing date of the application, then applicant must still timely file an application for patent term adjustment prior to the payment of the issue fee to contest the calculation of Office delay in issuing a first Office action or notice of allowance. *See* 37 C.F.R. § 1.705(b) and 35 U.S.C. § 154(b)(3)(B). A dispute as to the calculation of the 37 C.F.R. § 1.702(a)(1) period raised on request for reconsideration of patent term adjustment under 37 C.F.R. § 1.705(d) will be dismissed as untimely filed.

applicant, in which case the period of adjustment set forth in § 1.703 shall be reduced by the number of days, if any, beginning on the day after the date that is three months after the date of mailing or transmission of the Office communication notifying the applicant of the rejection, objection, argument, or other request and ending on the date the reply was filed. The period, or shortened statutory period, for reply that is set in the Office action or notice has no effect on the three-month period set forth in this paragraph.

The Office issued a final Office action on March 26, 2009. Applicant filed an amendment on June 23, 2009. The Office issued an Advisory action on August 6, 2009. Applicant filed a request for continued examination ("RCE") on August 25, 2009.

Although a reply to the final Office action was filed on June 23, 2009, within three months of the date the Office issued the final Office action, the reply was not a proper reply. A proper reply was not filed until August 25, 2009, which was three months and 60 days after the date the Office issued the final Office action. Therefore, a 60-day reduction under 37 C.F.R. § 1.704(b) is warranted.

Conclusion

In view of the prior discussion, the patent term adjustment as of the date the Office issued the Notice of Allowance remains 538 days, which is 598 days of A Delay reduced by 60 days of Applicant Delay.

Submission of the $200.00 fee set forth in 37 C.F.R. § 1.18(e) is acknowledged. No additional fee is required.

Applicant is reminded any delays by the Office pursuant to 37 C.F.R. §§ 1.702(a)(4) and 1.702(b) and any Applicant delays under 37 C.F.R. § 1.704(c)(10) will be calculated at the time of the issuance of the patent and Applicant will be notified of the revised patent term adjustment to be indicated on the patent in an Issue Notification letter mailed approximately three weeks prior to issuance.

The Office of Data Management has been advised of this decision. This matter is being referred to the Office of Data Management for issuance of the patent.

Telephone inquiries specific to this decision should be directed to Senior Petitions Attorney Steven Brantley at (571) 272-3203.

Anthony Knight
Director
Office of Petitions

SPE RESPONSE FOR CERTIFICATE OF CORRECTION

Paper No.:20100819

DATE : August 19, 2010

TO SPE OF : ART UNIT 2881

SUBJECT : Request for Certificate of Correction on Patent No.: 7,609,067

A response is requested with respect to the accompanying request for a certificate of correction.

Please complete this form and return with file, within **7** days to:
Certificates of Correction Branch - ST (South Tower) 9A22
Palm location **7590** - Tel. No. (703) 305-8309

With respect to the change(s) requested, correcting Office and/or Applicant's errors, should the patent read as shown in the certificate of correction? No new matter should be introduced, nor should the scope or meaning of the claims be changed.

Thank You For Your Assistance **Certificates of Correction Branch**

The request for issuing the above-identified correction(s) is hereby:

Note your decision on the appropriated box.

☒ **Approved** All changes apply.

☐ **Approved in Part** Specify below which changes **do not** apply.

☐ **Denied** State the reasons for denial below.

Comments:

/ROBERT KIM/
Supervisory Patent Examiner.Art Unit 2881

PTO/SB/66 (03-09)
Approved for use through 03/31/2012. OMB 0651-0016
U.S. Patent and Trademark Office: U.S. DEPARTMENT OF COMMERCE
Under the Paperwork Reduction Act of 1995, no persons are required to respond to a collection of information unless it displays valid OMB control number.

PETITION TO ACCEPT UNINTENTIONALLY DELAYED PAYMENT OF MAINTENANCE FEE IN AN EXPIRED PATENT (37 CFR 1.378(c))

Patent Number	Issue Date (YYYY-MM-DD)	Application Number	Filing Date (YYYY-MM-DD)	Docket Number (if applicable)
7259577	2007-08-21	11270044	2005-11-09	20247.0013USC1

CAUTION: Maintenance fee (and surcharge, if any) payment must correctly identify: (1) the patent number and (2) the application number of the actual U.S. application leading to issuance of that patent to ensure the fee(s) is/are associated with the correct patent. 37 CFR 1.366(c) and (d).

SMALL ENTITY
☒ Patentee claims, or has previously claimed, small entity status. See 37 CFR 1.27.

LOSS OF ENTITLEMENT TO SMALL ENTITY STATUS
☐ Patentee is no longer entitled to small entity status. See 37 CFR 1.27(g)

NOT Small Entity		Small Entity	
Fee	Code	Fee	Code
○ 3 ½ year	(1551)	● 3 ½ year	(2551)
○ 7 ½ year	(1552)	○ 7 ½ year	(2552)
○ 11 ½ year	(1553)	○ 11 ½ year	(2553)

SURCHARGE
The surcharge required by 37 CFR 1.20(i)(2) (Fee Code 1558) must be paid as a condition of accepting unintentionally delayed payment of the maintenance fee.

MAINTENANCE FEE (37 CFR 1.20(e)-(g))
The appropriate maintenance fee must be submitted with this petition.

STATEMENT
THE UNDERSIGNED CERTIFIES THAT THE DELAY IN PAYMENT OF THE MAINTENANCE FEE TO THIS PATENT WAS UNINTENTIONAL

PETITIONER(S) REQUEST THAT THE DELAYED PAYMENT OF THE MAINTENANCE FEE BE ACCEPTED AND THE PATENT REINSTATED

THIS PORTION MUST BE COMPLETED BY THE SIGNATORY OR SIGNATORIES

37 CFR 1.378(d) states: "Any petition under this section must be signed by an attorney or agent registered to practice before the Patent and Trademark Office, or by the patentee, the assignee, or other party in interest."

I certify, in accordance with 37 CFR 1.4(d)(4) that I am

- ● An attorney or agent registered to practice before the Patent and Trademark Office
- ○ A sole patentee
- ○ A joint patentee; I certify that I am authorized to sign this submission on behalf of all the other patentees.
- ○ A joint patentee; all of whom are signing this e-petition
- ○ The assignee of record of the entire interest

Under the Paperwork Reduction Act of 1995, no persons are required to respond to a collection of information unless it displays valid OMB control number.

Patent Practitioner			
A signature of the applicant or representative is required in accordance with 37 CFR 1.33 and 10.18. Please see 37 CFR 1.4(d) for the form of the signature			
Signature	/Bryan A. Wong/	Date (YYYY-MM-DD)	2011-12-05
Name	Bryan A. Wong	Registration Number	50836

This collection of information is required by 37 CFR 1.378(c). The information is required to obtain or retain a benefit by the public which is to file (and by the USPTO to process) an application. Confidentiality is governed by 35 U.S.C. 122 and 37 CFR 1.11 and 1.14. This collection is estimated to take 1 hour to complete, including gathering, preparing, and submitting the completed application form to the USPTO. Time will vary depending upon the individual case. Any comments on the amount of time you require to complete this form and/ or suggestions for reducing this burden, should be sent to the Chief Information Officer, U.S. Patent and Trademark Office, U.S. Department of Commerce, P.O. Box 1450, Alexandria, VA 22313-1450. DO NOT SEND FEES OR COMPLETED FORMS TO THIS ADDRESS. **This form can only be used when in conjunction with EFS-Web. If this form is mailed to the USPTO, it may cause delays in reinstating the patent.**

Privacy Act Statement

The Privacy Act of 1974 (P.L. 93-579) requires that you be given certain information in connection with your submission of the attached form related to a patent application or patent. Accordingly, pursuant to the requirements of the Act, please be advised that: (1) the general authority for the collection of this information is 35 U.S.C. 2(b)(2); (2) furnishing of the information solicited is voluntary; and (3) the principal purpose for which the information is used by the U.S. Patent and Trademark Office is to process and/or examine your submission related to a patent application or patent. If you do not furnish the requested information, the U.S. Patent and Trademark Office may not be able to process and/or examine your submission, which may result in termination of proceedings or abandonment of the application or expiration of the patent.

The information provided by you in this form will be subject to the following routine uses:

1. The information on this form will be treated confidentially to the extent allowed under the Freedom of Information Act (5 U.S.C. 552) and the Privacy Act (5 U.S.C. 552a). Records from this system of records may be disclosed to the Department of Justice to determine whether the Freedom of Information Act requires disclosure of these records.

2. A record from this system of records may be disclosed, as a routine use, in the course of presenting evidence to a court, magistrate, or administrative tribunal, including disclosures to opposing counsel in the course of settlement negotiations.

3. A record in this system of records may be disclosed, as a routine use, to a Member of Congress submitting a request involving an individual, to whom the record pertains, when the individual has requested assistance from the Member with respect to the subject matter of the record.

4. A record in this system of records may be disclosed, as a routine use, to a contractor of the Agency having need for the information in order to perform a contract. Recipients of information shall be required to comply with the requirements of the Privacy Act of 1974, as amended, pursuant to 5 U.S.C. 552a(m).

5. A record related to an International Application filed under the Patent Cooperation Treaty in this system of records may be disclosed, as a routine use, to the International Bureau of the World Intellectual Property Organization, pursuant to the Patent Cooperation Treaty.

6. A record in this system of records may be disclosed, as a routine use, to another federal agency for purposes of National Security review (35 U.S.C. 181) and for review pursuant to the Atomic Energy Act (42 U.S.C. 218(c)).

7. A record from this system of records may be disclosed, as a routine use, to the Administrator, General Services, or his/her designee, during an inspection of records conducted by GSA as part of that agency's responsibility to recommend improvements in records management practices and programs, under authority of 44 U.S.C. 2904 and 2906. Such disclosure shall be made in accordance with the GSA regulations governing inspection of records for this purpose, and any other relevant (i.e., GSA or Commerce) directive. Such disclosure shall not be used to make determinations about individuals.

8. A record from this system of records may be disclosed, as a routine use, to the public after either publication of the application pursuant to 35 U.S.C. 122(b) or issuance of a patent pursuant to 35 U.S.C. 151. Further, a record may be disclosed, subject to the limitations of 37 CFR 1.14, as a routine use, to the public if the record was filed in an application which became abandoned or in which the proceedings were terminated and which application is referenced by either a published application, an application open to public inspections or an issued patent.

9. A record from this system of records may be disclosed, as a routine use, to a Federal, State, or local law enforcement agency, if the USPTO becomes aware of a violation or potential violation of law or regulation.

UNITED STATES PATENT AND TRADEMARK OFFICE

Commissioner for Patents
United States Patent and Trademark Office
P.O. Box 1450
Alexandria, VA 22313-1450
www.uspto.gov

In re Patent No. 7259577
Issue Date: August 21,2007
Application No. 11270044
Filed: November 9,2005
Attorney Docket No. 14451.04

:
:DECISION GRANTING PETITION
:UNDER 37 CFR 1.378(c)
:

This is a decision on the electronic petition, filed December 6,2011 ,under 37 CFR 1.378(c) to accept the unintentionally delayed payment of the 3.5 year maintenance fee for the above-identified patent.

The petition is **GRANTED**.

The maintenance fee is accepted, and the above-identified patent reinstated as of December 6,2011 . This decision also constitutes notice that the fee has been accepted. An electronic copy of the petition and this decision has been created as an entry in the Image File Wrapper. Nevertheless, petitioner should print and retain an independent copy.

Telephone inquiries related to this electronic decision should be directed to the Electronic Business Center at 1-866-217-9197.

UNITED STATES PATENT AND TRADEMARK OFFICE

Commissioner for Patents
United States Patent and Trademark Office
P.O. Box 1450
Alexandria, VA 22313-1450
www.uspto.gov

FOLEY & LARDNER LLP
150 EAST GILMAN STREET
P.O. BOX 1497
MADISON WI 53701-1497

MAILED
MAR 09 2011
OFFICE OF PETITIONS

In re Application of	:	
RANTA-AHO, et al.	:	
Application No. 11/270,047	:	ON APPLICATION FOR
Filed: 11/08/2005	:	PATENT TERM ADJUSTMENT
Attorney Docket No. 088245-1097	:	

This is in response to the REQUEST FOR RECONSIDERATION OF PATENT TERM ADJUSTMENT FOR PATENT APPLICATION UNDER 37 C.F.R. §1.705(b) filed February 4, 2011. Applicants submit that the correct patent term adjustment to be indicated on the patent is 1395 days, not 1047 days as calculated by the Office as of the mailing of the initial determination of patent term adjustment. Applicants seek this correction solely on the basis that the Office will take in excess of three years to issue this patent.

As the instant application for patent term adjustment requests reconsideration of the patent term adjustment as it relates to the Office's failure to issue the patent within three years of the filing date, the application for patent term adjustment under 37 CFR 1.705(b) is **DISMISSED as PREMATURE**.

Knowledge of the actual date the patent issues is required to calculate the amount, if any, of additional patent term patentees are entitled to for Office failure to issue the patent within three years. See 37 CFR 1.702(b). (This is true even where a request for continued examination (RCE) was filed). The computer will not undertake the § 1.702(b) calculation until the actual date of issuance of the patent has been determined. Likewise, the computer will not calculate any further Office delay under 37 CFR 1.702(a)(4) or applicant delay under 37 CFR 1.704(c)(10) until the actual date of issuance of the patent has been determined. As such, the Office cannot make a

determination on the correctness of the patent term adjustment until the patent has issued.

Requesting reconsideration of the patent term adjustment to be indicated on the patent under 37 CFR 1.705(b) based on the initial determination of patent term adjustment and a projected issuance date of the patent (or even the filing date of the request for continued examination) is premature. Accordingly, it is appropriate to dismiss such a request as premature.

Rather than file an application for patent term adjustment under 37 CFR 1.705(b) contesting the 37 CFR 1.702(b) calculation at the time of the mailing of the notice of allowance, applicants are advised that they may wait until the time of the issuance of the patent and file a request for reconsideration of the patent term adjustment pursuant to 37 CFR 1.705(d). As the USPTO does not calculate the amount of time earned pursuant to 37 CFR 1.702(b) until the time of the issuance of the patent, the Office will consider any request for reconsideration of the patent term adjustment due to an error in the calculation of 37 CFR 1.702(b) to be timely if the request for reconsideration is filed within two months of the issuance of the patent. However, as to all other bases for contesting the initial determination of patent term adjustment received with the notice of allowance, applicants must timely file an application for patent term adjustment prior to the payment of the issue fee.[1]

The Office acknowledges submission of the $200.00 fee set forth in 37 CFR 1.18(e) for consideration of the application for patent term adjustment under 37 CFR 1.705(b).

Any request for reconsideration of the patent term adjustment indicated on the patent must be timely filed within two months

---

[1] For example, if applicants dispute both the calculation of patent term adjustment under 37 CFR 1.702(a)(1) for Office failure to mail a first Office action or notice of allowance not later than fourteen months after the date on which the application was filed, and under 37 CFR 1.702(b) for Office failure to issue a patent within three years of the actual filing date of the application, then applicants must still timely file an application for patent term adjustment prior to the payment of the issue fee to contest the calculation of Office delay in issuing a first Office action or notice of allowance. See 37 CFR 1.705(b) and 35 U.S.C. 154(b)(3)(B). A dispute as to the calculation of the § 1.702(a)(1) period raised on request for reconsideration of patent term adjustment under 37 CFR 1.705(d) will be dismissed as untimely filed.

after issuance pursuant to 37 CFR 1.705(d) and must include payment of the required fee under 37 CFR 1.18(e).

The Office of Data Management has been advised of this decision. This application is being referred to the Office of Data Management for issuance of the patent.

Telephone inquiries specific to this decision should be directed to the undersigned at (571) 272-3211.

Christina Tartera Donnell

Christina Tartera Donnell
Senior Petitions Attorney
Office of Petitions

UNITED STATES PATENT AND TRADEMARK OFFICE

Commissioner for Patents
United States Patent and Trademark Office
P.O. Box 1450
Alexandria, VA 22313-1450
www.uspto.gov

APR 1 1 2011

OSTROLENK FABER GERB & SOFFEN
1180 AVENUE OF THE AMERICAS
NEW YORK, NY 20036-8403

In re Application of: Daniel Preston Application No. 11/270,048 Filed: November 9, 2005 For: MAGNETIC CLOSING METHOD FOR PARACHUTES	: : : : : :	**DECISION ON REFUND REQUEST**

This is in response to the communication denominated Refund Request received February 28, 2011.

The communication requests refund of the $405 fee for a Request for Continued Examination (RCE), the $130 fee for a Petition for Suspension of three (3) months and the $555 fee for an Extension of Time fee paid on January 26, 2011.

The request is **GRANTED-IN-PART.**

A review of the prosecution indicates that a Final Office action was mailed July 26, 2010 to Bourque & Associates, the attorney of record at the time. A Revocation of Power of Attorney with a new Power of Attorney to Customer No. 02352 and Change of Correspondence Address was filed by the assignee on January 18, 2011. On January 25, 2011, a Notice of Appeal, a three month extension of time and the appropriate fees were filed by Mr. Keith Barkaus, an attorney associated with Customer No. 02352. On January 26, 2011, an RCE, a petition for a three month suspension, a three months extension of time and the appropriate fees were filed by Mr. Daniel Bourque, the prior attorney of record. On February 28, 2011, Mr. Bourque filed the Refund Request.

Although the Revocation of Power of Attorney and the new Power of Attorney were filed on January 18, 2011, a Notice of Acceptance of Power of Attorney and a Notice Regarding Change of Power of Attorney were not mailed until January 26, 2011. In the Refund Request, Mr. Bourque asserts that "at the time of filing, Bourque and Associates, P.A. was under the impression that were still the attorney of record," so thus were required to file the appropriate papers to keep the application pending. Mr. Bourque argues that in light of the fact that a notice of appeal and extension of time was filed by Applicant's new representative BEFORE Bourque and Associates, P.A. were aware of the revocation of their power of attorney and filed the RCE, three months

extension of time and petition for three months suspension, the $1090 fee paid on January 26, 2010 should be refunded.

The refund request is granted in part. A Notice of Appeal was filed by Mr. Barkaus on January 25, 2011. MPEP 706.07 sets forth that "if an applicant files an RCE under 37 CFR 1.114 after the filing of a Notice of Appeal to the Board of Patent Appeals and Interferences (Board), but prior to a decision on the appeal, it will be treated as a request to withdraw the appeal and reopen prosecution of the application before the examiner, regardless of whether the RCE is proper or improper. Although Mr. Bourque was no longer of record, the papers filed by Mr. Bourque were acceptable to the USPTO since Mr. Bourque qualifies to act in a representative capacity per 37 CFR 1.34 and MPEP 402. Accordingly, the fee for the RCE ($405) and the fee for the petition for suspension ($130) were properly charged to the deposit account indicated on the RCE transmittal form. However, since the fee for the third month extension of time ($555) was paid by Mr. Barkaus on January 25, 2011 along with the notice of appeal, the same extension of time fee which Mr. Bourque paid on January 26, 2011 was unnecessary.

The USPTO issued a credit card refund in the amount of $535 and a credit card refund in the amount of $555. Since the RCE and petition for suspension was an acceptable submission after a Notice of Appeal, the $535 total fee for the RCE and the petition for suspension will be applied against deposit account number 02-3285 indicated on the RCE transmittal form.

Any inquiries regarding this communication should be directed to Teri P. Luu, Quality Assurance Specialist, at (571) 272-7045

Katherine Matecki

Katherine Matecki, Director
Patent Technology Center 3600
(571) 272-5250

cc: Daniel Bourque
Bourque & Associates, P.A.
835 Hanover Street, Suite 301
Manchester, NH 03104

UNITED STATES PATENT AND TRADEMARK OFFICE

Commissioner for Patents
United States Patent and Trademark Office
P.O. Box 1450
Alexandria, VA 22313-1450
www.uspto.gov

APR 1 1 2011

OSTROLENK FABER GERB & SOFFEN
1180 AVENUE OF THE AMERICAS
NEW YORK, NY 20036-8403

In re Application of:	:	
Daniel Preston	:	**SUA SPONTE**
Application No. 11/270,048	:	**RECISSION OF NON-FINAL**
Filed: November 9, 2005	:	**OFFICE ACTION**
For: MAGNETIC CLOSING METHOD FOR	:	
PARACHUTES	:	

A review of the application reveals that a Request for Suspension was included in the Request for Continued Examination filed January 26, 2011.

An office action was mailed March 9, 2011, due to a failure to notice the Suspension request. In order for the Request to be granted there can be no outstanding office action awaiting Applicant's action. The Request was filed before the office action was actually mailed.

In view of these facts, the office action mailed March 9, 2009 is hereby vacated.

In view of the Suspension request, action by the Office is suspended on this application under 37 CFR 1.103(a) for a period of 3 months from January 26, 2011. At the end of this period, the application will be placed on the examiner's docket for further prosecution. See MPEP 709.

Inquires related to this decision may be directed to Teri P. Luu at (571) 272-7045.

Katherine Matecki

Katherine Matecki, Director
Technology Center 3600
(571) 272-5250

KM/tl: 04/01/11

UNITED STATES PATENT AND TRADEMARK OFFICE

Commissioner for Patents
United States Patent and Trademark Office
P.O. Box 1450
Alexandria, VA 22313-1450
www.uspto.gov

SCHUBERT LAW GROUP PLLC
6013 CANNON MOUNTAIN DRIVE, S14
AUSTIN TX 78749

MAILED
AUG 24 2010
OFFICE OF PETITIONS

In re Application of	:	
Steven Clay Moore	:	
Application No. 11/270,057	:	DECISION ON PETITION
Filed: November 9, 2005	:	
Attorney Docket No. AMG.4016.C01	:	

This is a decision on the petition under the unintentional provisions of 37 CFR 1.137(b), filed July 7, 2010, to revive the above-identified application.

The petition is **GRANTED**.

This application became abandoned for failure to reply in a timely manner to the final Office action mailed August 17, 2009. No extensions of time under the provisions of 37 CFR 1.136(a) were obtained. Accordingly, this application became abandoned on November 18, 2009. A Notice of Abandonment was mailed March 2, 2010.

The petition satisfies the requirements of 37 CFR 1.137(b) in that petitioner has supplied (1) the reply in the form of a Request for Continued Examination (RCE) and fee of $405.00 and the submission required by 37 CFR 1.114; (2) the petition fee of $810.00; and (3) a proper statement of unintentional delay.

Further, it is not apparent whether the person signing the instant petition was ever given a power of attorney or authorization of agent to prosecute this patent. In accordance with 37 CFR 1.34(a), the signature appearing on the petition shall constitute a representation to the United States Patent and Trademark Office that he/she is authorized to represent the particular party in whose behalf he/she acts.

Telephone inquiries concerning this decision should be directed to the undersigned at (571) 272-7751.

This matter is being referred to Technology Center 1794 for processing of the Request for Continued Examination under 37 CFR 1.114 and the Amendment filed with the instant petition.

Joan Olszewski
Petitions Examiner
Office of Petitions

UNITED STATES PATENT AND TRADEMARK OFFICE

UNITED STATES DEPARTMENT OF COMMERCE
United States Patent and Trademark Office
Address: COMMISSIONER FOR PATENTS
P.O. Box 1450
Alexandria, Virginia 22313-1450
www.uspto.gov

APPLICATION NO.	FILING DATE	FIRST NAMED INVENTOR	ATTORNEY DOCKET NO.	CONFIRMATION NO.
11/270,175	11/09/2005	Giuseppe Maffeis	72039	6500

23872 7590 12/09/2010
MCGLEW & TUTTLE, PC
P.O. BOX 9227
SCARBOROUGH STATION
SCARBOROUGH, NY 10510-9227

EXAMINER
KENNEDY, JOSHUA T

ART UNIT	PAPER NUMBER
3679	

MAIL DATE	DELIVERY MODE
12/09/2010	PAPER

Please find below and/or attached an Office communication concerning this application or proceeding.

The time period for reply, if any, is set in the attached communication.

UNITED STATES PATENT AND TRADEMARK OFFICE

Commissioner for Patents
United States Patent and Trademark Office
P.O. Box 1450
Alexandria, VA 22313-1450
www.uspto.gov

DEC - 9 2010

McGLEW & TUTTLE, PC
P.O. BOX 9227
SCARBOROUGH STATION
SCARBOROUGH, NY 10510-9227

In re Application of	:	
Giuseppe Maffeis	:	
Application No. 11/270,175	:	DECISION ON PETITION
Filed: November 9, 2005	:	UNDER 37 CFR §1.181
For: MULTIVALENT SECTION FOR MAKING	:	
FRAMES, SUPPORTS, SUPPORTING	:	
STRUTURES AND THE LIKE	:	

This is a decision on appellant's communication denominated "PETITION TO RESCIND NON-COMPLIANT APPEAL BRIEF NOTIFICATION AND IN THE ALTERNATIVE TO ACCEPT APPELLANT'S REVISED BRIEF WITH NO FURTHER EXTENSIONS FEE DUE" received September 18, 2009, which will be treated as a petition requesting supervisory review under 37 CFR 1.181. The delay in treating this petition is regretted.

The petition is **GRANTED.**

Facts

A review of the record shows that an appeal brief was filed January 12, 2009. However, the appeal brief was held to be defective because it was not in compliance with 37 CFR 41.37(c)(1)(v) as it did not contain a concise explanation of the subject matter defined in each of the independent claims involved in the appeal, referring to the specification by page and line number, and to the drawing, if any, by reference characters. Specifically, the brief failed to identify the structure associated with the means plus function recitation "engagement means" and failed to identify with reference characters "the connection clamps". The brief was also held to be defective since the description failed to identify the "polygon circumference outer surface engagement part," "the parallel borders," "the undercuts," "the cylindrical housing region," "the inner surface" and "the cylindrical sections" recited in the claims. On May 18, 2009 Appellant submitted a corrected appeal brief. However, the corrected brief was also held to be defective for the same reason that the original brief was defective. Furthermore, the examiner cited additional deficiencies in the corrected brief. The response period for filing another corrected brief continued to run from the mailing of the April 20, 2009 first Notice of Defective Appeal Brief.

Discussion

Petitioner argues that the corrected brief filed May 18, 2009 addressed all the deficiencies set forth in the April 20, 2009 Notice of Defective Appeal Brief. Petitioner further argues that since the second notice of defective appeal brief mailed September 1, 2009 raised new issues regarding the sufficiency of the corrected appeal brief, the time period in which to submit a second corrected Brief should have been restarted.

A review of the May 18, 2009 appeal brief indicates that all the deficiencies identified in the April 20, 2009 Notice of Defective Appeal Brief were corrected (see Summary of the Claimed Subject Matter with regards to Claims 1, 11 and 17). The new issues raised by the examiner in the second notice of defective brief mailed September 1, 2009 warranted a time period of one month or thirty days from the mailing date of the notification, whichever is longer. Since, the second corrected appeal brief was timely filed within the first month on September 18, 2009, the appeal brief is accepted without further fees due.

Accordingly, the application has been forwarded to an examiner for prompt action on the merits, including preparation of an Examiner's Answer.

Questions concerning this decision should be referred to Teri Luu, Quality Assurance Specialist, at (571) 272-7045.

David Talbott, Director
Patent Technology Center 3600
Telephone No.: (571) 272-5150

DT/tl: 11/07/10

UNITED STATES PATENT AND TRADEMARK OFFICE

Commissioner for Patents
United States Patent and Trademark Office
P.O. Box 1450
Alexandria, VA 22313-1450
www.uspto.gov

Decision Date : October 7,2011

In re Application of :

John Cox

Application No : 11270195

Filed : 08-Nov-2005

Attorney Docket No : USGINZ04920

DECISION ON REQUEST TO WITHDRAW AS ATTORNEY/AGENTOF RECORD

This is an electronic decision on the Request to Withdraw as attorney or agent of record under 37 CFR § 1.36(b), filed October 7,2011

The request is **APPROVED.**

The request was signed by Johney U. Han (registration no. 45565) on behalf of all attorneys/agents associated with Customer Number 40518 . All attorneys/agents associated with Cusotmer Number 40518 have been withdrawn.

Since there are no remaining attorneys of record, all future communications from the Office will be directed to the first named inventor or assignee that has properly made itself of record pursuant to 37 CFR 3.71, with correspondence address:

Name	USGI Medical, Inc.
Name2	
Address 1	1140 Calle Cordillera
Address 2	
City	San Clemente
State	CA
Postal Code	92673
Country	US

As a reminder, requester is required to inform the first named inventor or assignee that has properly made itself of record pursuant to 37 CFR 3.71 of the electronically processed petition.

Telephone inquiries concerning this decision should be directed to the Patent Electronic Business Center (EBC) at 866-217-9197.

Office of Petitions

Doc Code: PET.AUTO **Document Description: Petition automatically granted by EFS-Web**	PTO/SB/83 U.S. Patent and Trademark Office Department of Commerce

Electronic Petition Request	**REQUEST FOR WITHDRAWAL AS ATTORNEY OR AGENT AND CHANGE OF CORRESPONDENCE ADDRESS**
Application Number	11270195
Filing Date	08-Nov-2005
First Named Inventor	John Cox
Art Unit	3738
Examiner Name	CHRISTOPHER PRONE
Attorney Docket Number	USGINZ04920
Title	Transgastric tubal ligation

◉ Please withdraw me as attorney or agent for the above identified patent application and the practitioners of record associated with Customer Number: 40518

The reason(s) for this request are those described in 37 CFR:

10.40(b)(4)

Certifications

☒ I/We have given reasonable notice to the client, prior to the expiration of the response period, that the practitioner(s) intend to withdraw from employment

☒ I/We have delivered to the client or a duly authorized representative of the client all papers and property (including funds) to which the client is entitled

☒ I/We have notified the client of any responses that may be due and the time frame within which the client must respond

Change the correspondence address and direct all future correspondence to the first named inventor or assignee that has properly made itself of record pursuant to 37 CFR 3.71:

Name	USGI Medical, Inc.
Address	1140 Calle Cordillera
City	San Clemente
State	CA
Postal Code	92673
Country	US

I am authorized to sign on behalf of myself and all withdrawing practitioners.	
Signature	/Johney U. Han/
Name	Johney U. Han
Registration Number	45565

UNITED STATES PATENT AND TRADEMARK OFFICE

Commissioner for Patents
United States Patent and Trademark Office
P.O. Box 1450
Alexandria, VA 22313-1450
www.uspto.gov

BANNER & WITCOFF, LTD.
TEN SOUTH WACKER DRIVE
SUITE 3000
CHICAGO IL 60606

MAILED

JUN 16 2011

OFFICE OF PETITIONS

In re Patent of	:	
Ludwig et al.	:	
Application Number: 11/270242	:	DECISION
Filing or 371(c) Date: 11/09/2005	:	ON PETITION
Pat. Num./Pub. Num: 7520576	:	
Issue Date: 04/21/2009	:	
For: ANTI-TIP INTERLOCKING LINKAGE	:	
MECHANISM FOR VERTICAL CABINETS	:	

This is a decision on the Petition Under 37 C.F.R. § 1.182, filed May 10, 2011.

The petition is **granted** to the extent indicated.

Applicant files the present petition and requests withdrawal of the Terminal Disclaimer to Patent No. 6,104,619, filed May 11, 2005, and for entry of the Terminal Disclaimer to Patent No. 7,104,619.

The USPTO will not grant a request to withdraw or amend a recorded terminal disclaimer in an issued patent on the grounds that the rules of practice and 35 USC 253 do not include a mechanism for withdrawal or amendment of such a terminal disclaimer. See MPEP 1490;Bayer AG v. Carlsbad Technology Inc., 298 F.3d 1377, 64 USPQ2d 1045, 1048-49 (CAFC 2002). As such, the original terminal disclaimer unfortunately cannot be "corrected" as petitioner requests. Nevertheless, as the newly filed, corrective Terminal Disclaimer is regular in form and is accompanied by the requisite fee, it is accepted, placed in this file, and thus has been recorded against the instant patent, as petitioner requests.

The patent file is being returned to Files Repository.

The Petition is **granted to the extent indicated herein**.

Telephone inquiries concerning this matter should be directed to the undersigned at (571) 272-3232.

/DLW/

Derek L. Woods
Attorney
Office of Petitions

UNITED STATES PATENT AND TRADEMARK OFFICE

Commissioner for Patents
United States Patent and Trademark Office
P.O. Box 1450
Alexandria, VA 22313-1450
www.uspto.gov

MAILED
SEP 08 2011
OFFICE OF PETITIONS

CINDY MURPHY LLC (GOODRICH)
1768 EAST 25TH STREET
CLEVELAND OH 44114

In re Application of	:	
Nathan Pisarski	:	
Application No. 11/270,395	:	ON PETITION
Filed: November 9, 2005	:	
Attorney Docket No. 204DS102b	:	

This is a decision on the petition to withdraw the holding of abandonment under 37 CFR 1.181, filed July 5, 2011.

The petition under 37 CFR 1.181 is **DISMISSED**.

Any request for reconsideration of this decision must be submitted within **TWO (2) MONTHS** from the mail date of this decision. The reconsideration request should include a cover letter entitled "Renewed Petition under 37 CFR 1.181". Extensions of time under 37 CFR 1.136(a) are permitted. No fee is required for a renewed petition.

The above-identified application became abandoned for failure to timely file a reply in response to the non-final Office action mailed November 17, 2010. This Office action set an extendable period for reply of three (3) months. On May 31, 2011, attorney Cynthia S. Murphy filed a reply. However, the reply was not timely filed, as that maximum extendable period for reply had passed (the late date applicant could have filed a reply, with a three month extension of time, would have been May 17, 2011). As such, the application became abandoned by operation of law on February 18, 2011. The Office mailed a Notice of Abandonment on July 6, 2011.

On petition, petitioner Cynthia S. Murphy argues that she never received the November 17, 2010 Office action, as it was addressed to inventor Nathan Pisarski.[1] According to petitioner, the Office action should have been mailed to the address set forth in the Change of Correspondence Address, filed June 13, 2010.

Petitioner's argument has been considered, but is not persuasive. A review of the June 13, 2010 Change of Correspondence Address reveals that it was not signed. Pursuant to 37 CFR 1.4(d), each piece of correspondence filed in an application must contain either a handwritten or an S-signature. A review of the June 13, 2010 Change of Correspondence Address reveals that rather than containing a handwritten or S-signature, it was "signed" in a computer generated, cursive font. This is **not** an acceptable signature for correspondence filed with the Office.[2]

As the evidence supplied with the instant petition is not sufficient to merit withdrawing the holding of abandonment, petitioner may wish to consider reviving the application pursuant to 37 CFR 1.137(b).

A grantable petition under 37 CFR 1.137(b) must be accompanied by: (1) the required reply, unless previously filed; (2) the petition fee as set forth in 37 CFR 1.17(m); (3) a statement that the entire delay in filing the required reply from the due date for the reply until the filing of a grantable petition pursuant to 37 CFR 1.137(b) was unintentional; and (4) any terminal disclaimer (and fee as set forth in 37 CFR 1.20(d)) required by 37 CFR 1.137(d).

Further correspondence with respect to this matter should be addressed as follows:

By mail: Mail Stop Petitions
Commissioner for Patents
P.O. Box 1450
Alexandria VA 22313-1450

By FAX: (571) 273-8300
Attn: Office of Petitions

---

[1] Petitioner states that the "inventor did not inform me of this mailing, whereby I was unaware that an Office action had been issued." If that is the case, it is unclear how Murphy filed the May 31, 2011 reply.

[2] It is noted that prior correspondence from petitioner, such as the May 31, 2011 reply, also lacked a proper signature.

Telephone inquiries related to this decision should be directed to the undersigned at (571)272-3207.

Cliff Congo
Petitions Attorney
Office of Petitions

UNITED STATES PATENT AND TRADEMARK OFFICE

Commissioner for Patents
United States Patent and Trademark Office
P.O. Box 1450
Alexandria, VA 22313-1450
www.uspto.gov

MAILED
NOV 03 2011
OFFICE OF PETITIONS

CINDY MURPHY LLC (GOODRICH)
1768 EAST 25TH STREET
CLEVELAND OH 44114

In re Application of	:	
Nathan Pisarski	:	
Application No. 11/270,395	:	ON PETITION
Filed: November 9, 2005	:	
Attorney Docket No. 204DS102b	:	

This is a decision on the renewed petition to withdraw the holding of abandonment under 37 CFR 1.181, filed October 9, 2011.

The petition under 37 CFR 1.181 is **DISMISSED**.

Any request for reconsideration of this decision must be submitted within **TWO (2) MONTHS** from the mail date of this decision. The reconsideration request should include a cover letter entitled "Renewed Petition under 37 CFR 1.181". Extensions of time under 37 CFR 1.136(a) are permitted. No fee is required for a renewed petition.

The above-identified application became abandoned for failure to timely file a reply in response to the non-final Office action mailed November 17, 2010. This Office action set an extendable period for reply of three (3) months. On May 31, 2011, attorney Cynthia S. Murphy filed a reply. However, the reply was not timely filed, as that maximum extendable period for reply had passed (the late date applicant could have filed a reply, with a three month extension of time, would have been May 17, 2011). As such, the application became abandoned by operation of law on February 18, 2011. The Office mailed a Notice of Abandonment on July 6, 2011.

On petition filed July 5, 2011, petitioner Cynthia S. Murphy argued that she never received the November 17, 2010 Office action, as it was addressed to inventor Nathan Pisarski. According to petitioner, the Office action should have been mailed to the address set forth in the Change of Correspondence Address, filed June 13, 2010 (1768 East 25th Street, Cleveland Ohio 44114).

However, the petition was dismissed in a decision mailed on September 8, 2011. The decision explained that a review of the June 13, 2010 Change of Correspondence Address revealed that it did not contain a proper signature, and as such, was properly not entered.

On renewed petition, petitioner Murphy argues that despite attorney Don Bulson's filing of a Request for Withdrawal as Attorney on April 9, 2010, her power of attorney remained intact, as she was not one of the listed attorneys on the revocation. As a result, petitioner argues that "Office communications should have continued to have been mailed to me at the original correspondence address" (1621 Euclid Avenue, 19th Floor, Cleveland Ohio 44115). This differs from petitioner's statement in the first petition that the Office action was not received at 1768 East 25th Street.

The petition and prosecution history have been carefully considered. It is requested that petitioner clarify the following:

1. Where was petitioner receiving mail effective November 17, 2010? Was petitioner having mail forwarded from 1621 Euclid Avenue to 1768 East 25th Street?

2. Petitioner states that "I do not know if the inventor Nathan Pisarski ever received the outstanding Office action in this particular case." Has petitioner made an inquiry with Pisarski as to whether or not he received the Office action?

Further correspondence with respect to this matter should be addressed as follows:

By mail: Mail Stop Petitions
Commissioner for Patents
P.O. Box 1450
Alexandria VA 22313-1450

By FAX: (571) 273-8300
Attn: Office of Petitions

Telephone inquiries related to this decision should be directed to the undersigned at (571)272-3207.

Cliff Congo
Petitions Attorney
Office of Petitions

UNITED STATES PATENT AND TRADEMARK OFFICE

Commissioner for Patents
United States Patent and Trademark Office
P.O. Box 1450
Alexandria, VA 22313-1450
www.uspto.gov

CINDY MURPHY LLC (GOODRICH)
1768 EAST 25TH STREET
CLEVELAND OH 44114

MAILED
JAN 03 2012
OFFICE OF PETITIONS

In re Application of	:	
Nathan Pisarski	:	CORRECTED DECISION
Application No. 11/270,395	:	ON PETITION
Filed: November 9, 2005	:	
Attorney Docket No. 204DS102b	:	

This is a corrected decision on the renewed petition to withdraw the holding of abandonment under 37 CFR 1.181, filed October 9, 2011.

The petition under 37 CFR 1.181 is **GRANTED**.

The above-identified application became abandoned for failure to timely file a reply in response to the non-final Office action mailed November 17, 2010. This Office action set an extendable period for reply of three (3) months. On May 31, 2011, attorney Cynthia S. Murphy filed a reply. However, the reply was not timely filed, as that maximum extendable period for reply had passed (the late date applicant could have filed a reply, with a three month extension of time, would have been May 17, 2011). As such, the application became abandoned by operation of law on February 18, 2011. The Office mailed a Notice of Abandonment on July 6, 2011.

On petition filed July 5, 2011, petitioner Cynthia S. Murphy argued that she never received the November 17, 2010 Office action, as it was addressed to inventor Nathan Pisarski. According to petitioner, the Office action should have been mailed to the address set forth in the Change of Correspondence Address, filed June 13, 2010 (1768 East 25th Street, Cleveland Ohio 44114).

However, the petition was dismissed in a decision mailed on September 8, 2011. The decision explained that a review of the June 13, 2010 Change of Correspondence Address revealed that it did not contain a proper signature, and as such, was properly not entered.

With the instant renewed petition, petitioner Murphy argues that despite attorney Don Bulson's filing of a Request for Withdrawal as Attorney on April 9, 2010, her power of attorney remained intact, as she was not one of the listed attorneys on the revocation. As a result, petitioner argues that "Office communications should have continued to have been mailed to me at the original correspondence address"

Petitioner's argument has been reconsidered, and found to be persuasive. The November 17, 2010 Office action should not have been mailed to the inventor, but rather should have been mailed to the correspondence address in effect at that time.

In view thereof, the holding of abandonment is **WITHDRAWN**.

The Power of Attorney filed on August 9, 2011 has been entered. Future correspondence concerning this application will be mailed to the above address of record until such time as proper instructions are received to the contrary.

The application is being forwarded to Group Art Unit 3749 for consideration of the Amendment, filed October 9, 2011.

Telephone inquiries related to this decision should be directed to the undersigned at (571)272-3207.

Cliff Congo
Petitions Attorney
Office of Petitions

UNITED STATES PATENT AND TRADEMARK OFFICE

CERTIFICATE OF CORRECTION

PATENT NO.: Page 1 of
DATED:
INVENTOR(S):

It is certified that error appears in the above-identified patent and that said Letters Patent is hereby corrected as shown below:

SPE RESPONSE FOR CERTIFICATE OF CORRECTION

Paper No.:20120208

DATE : February 8, 2012

TO SPE OF : ART UNIT 2852

SUBJECT : Request for Certificate of Correction on Patent No.: 7912394

A response is requested with respect to the accompanying request for a certificate of correction.

Please complete this form and return with file, within **7** days to:
Certificates of Correction Branch - PK 3-910
Palm location **7590** - Tel. No. 305-8201

With respect to the change(s) requested, correcting Office and/or Applicant's errors, should the patent read as shown in the certificate of correction? No new matter should be introduced, nor should the scope or meaning of the claims be changed.

Thank You For Your Assistance **Certificates of Correction Branch**

The request for issuing the above-identified correction(s) is hereby:
Note your decision on the appropriate box.

☒ **Approved** **All** changes apply.

☐ **Approved in Part** Specify below which changes **do not** apply.

☐ **Denied** State the reasons for denial below.

Comments:

The non-elected claims should have been rejoined as per the Notice of Allowability.

SPE: /David M. Gray/ **Art Unit** 2852

UNITED STATES PATENT AND TRADEMARK OFFICE

Commissioner for Patents
United States Patent and Trademark Office
P.O. Box 1450
Alexandria, VA 22313-1450
www.uspto.gov

RALPH C. FRANCIS
FRANCIS LAW GROUP
1942 EMBARCADERO
OAKLAND CA 94606

MAILED

DEC 30 2010

OFFICE OF PETITIONS

In re Application of
Bernhard B. Sterling et al.
Application No. 11/270,723
Filed: November 8, 2005
Attorney Docket No: WT-02-011 CON

ON PETITION

This is a decision on the petition, filed November December 10, 2010 under 37 CFR 1.137(b)[1], to revive the above identified application.

The petition is **GRANTED**.

This application became abandoned July 29, 2010 for failure to pay the issue fee in response to the Notice of Allowance mailed on April 28, 2010. Accordingly, the Notice of Abandonment was mailed on August 11, 2010.

The issue fee in the amount of $755.00, publication fee in the amount of $300 and the petition fee in the amount of $810 have been applied.

All other requirements of 37 CFR 1.137(b) having now been met, this matter is being referred to the Publishing Division to be processed into a patent.

Telephone inquiries concerning this matter may be directed to the undersigned Petitions Attorney at (571) 272-3212.

Patricia Faison-Ball
Senior Petitions Attorney
Office of Petitions

---

[1]Effective December 1, 1997, the provisions of 37 CFR 1.137(b) now provide that where the delay in reply was unintentional, a petition may be filed to revive an abandoned application or a lapsed patent pursuant to 37 CFR 1.137(b). A grantable petition filed under the provisions of 37 CFR 1.137(b) must be accompanied by:

(1) the required reply, unless previously filed. In a nonprovisional application abandoned for failure to prosecute, the required reply may be met by the filing of a continuing application. In an application or patent, abandoned or lapsed for failure to pay the issue fee or any portion thereof, the required reply must be the payment of the issue fee or any outstanding balance thereof.

(2) the petition fee as set forth in 37 CFR 1.17(m);

(3) a statement that the entire delay in filing the required reply from the due date for the reply until the filing of a grantable petition pursuant to 37 CFR 1.137(b) was unintentional. The Commissioner may required additional information where there is a question whether the delay was unintentional; and

(4) any terminal disclaimer (and fee as set forth in 37 CFR 1.20(d)) required pursuant to 37 CFR 1.137(c)).

UNITED STATES PATENT AND TRADEMARK OFFICE

Commissioner for Patents
United States Patent and Trademark Office
P.O. Box 1450
Alexandria, VA 22313-1450
www.uspto.gov

STERNE, KESSLER, GOLDSTEIN & FOX P.L.L.C.
1100 NEW YORK AVENUE, N.W.
WASHINGTON, DC 20005

MAILED

OCT 05 2010

OFFICE OF PETITIONS

In re Patent No. 7,601,835 :
Issue Date: October 13, 2009 :
Application No. 11/270,777 : ON PETITION
Filed: November 10, 2005 :
Attorney Docket No.: 2372.0050000/RWE/JSO :

This is a decision on the petition, filed August 20, 2010, which is being treated as a request under 37 CFR 3.81(b)[1] to correct the name of the assignee on the front page of the above-identified patent by way of a Certificate of Correction.

The petition is not signed by a registered patent attorney or patent agent of record. However, in accordance with 37 CFR 1.34, the signature of Mr. Nicholas P. Chiara appearing on the correspondence shall constitute a representation to the United States Patent and Trademark Office that he is authorized to represent the particular party on whose behalf he acts. A courtesy copy of this decision is being mailed to petitioner herein. However, until otherwise instructed, any future correspondence regarding this application file will be directed solely to the above-noted correspondence address of record.

The request is **DISMISSED**.

Petitioner is reminded that MPEP 1481.01 states that a patent will issue to the applicant, unless an assignee's name is identified in the appropriate space for specifying the assignee on the Fee(s) Transmittal Form PTOL-85(b). The assignment data printed on the patent is based solely on the information supplied by applicant. Any request for a patent to be corrected to state the name of the assignee must (a) state that the assignment was submitted for recordation as set forth in 37 CFR **3.11** before issuance of the patent; (b) include a request for a certificate of correction under 37 CFR **1.323** along with the fee set forth in 37 CFR **1.20**(a); and (c) include the processing fee set forth in 37 CFR **1.17**(i). See 37 CFR **3.81**(b).

It is noted that the present request indicates that the assignment was submitted for recordation prior to issuance and a certificate of correction (and fee) as required by 3.81(b) was submitted; however, it appears that the $130 processing fee under 37 CFR 1.17(i) has not been submitted. Accordingly, the request cannot be granted at this time.

---

[1] *See* MPEP 1309, subsection II; and Official Gazette of June 22, 2004.

This decision is made without prejudice to reconsideration upon the filing of a renewed petition under 37 CFR 3.81(b) (no further Certificate of Correction fee required) and the $130 processing fee. Any request for reconsideration must be submitted within two (2) MONTHS from the mail date of this decision to be considered timely and delivered through one of the following mediums:

By mail: Mail Stop PETITIONS
Commissioner for Patents
Post Office Box 1450
Alexandria, VA 22313-1450

By hand: Customer Service Window
Mail Stop Petitions
Randolph Building
401 Dulany Street
Alexandria, VA 22314

By fax: (571) 273-8300
ATTN: Office of Petitions

By Internet: EFS-Web[2]

Any questions concerning this matter may be directed to the undersigned at (571) 272-3204.

Sherry D. Brinkley
Petitions Examiner
Office of Petitions

cc: NICHOLAS P. CHIARA
FLOREK & ENDRESS PLLC
1156 AVENEUE OF AMERICAS
NEW YORK, NY 10036

[2] www.uspto.gov/ebc/efs_help.html (for help using EFS-Web call the Patent Electronic Business Center at (866) 217-9197)

UNITED STATES PATENT AND TRADEMARK OFFICE

Commissioner for Patents
United States Patent and Trademark Office
P.O. Box 1450
Alexandria, VA 22313-1450
www.uspto.gov

STERNE, KESSLER, GOLDSTEIN & FOX P.L.L.C.
1100 NEW YORK AVENUE, N.W.
WASHINGTON, DC 20005

MAILED
DEC 02 2010
OFFICE OF PETITIONS

In re Patent No. 7,601,835	:	
Issue Date: October 13, 2009	:	
Application No. 11/270,777	:	ON PETITION
Filed: November 10, 2005	:	
Attorney Docket No.: 2372.0050000/RWE/JSO	:	

This is a decision on the renewed petition, filed October 13, 2010, requesting that the name of the assignee on the front page of the above-identified patent be corrected by way of a Certificate of Correction.

There is no indication that the petition is signed by a registered patent attorney or patent agent of record. However, in accordance with 37 CFR 1.34, the signature of Mr. Nicholas P. Chiara appearing on the correspondence shall constitute a representation to the United States Patent and Trademark Office that he is authorized to represent the particular party on whose behalf he acts. A courtesy copy of this decision is being mailed to the petitioner; however, if Mr. Chiara desires to continue receiving correspondence regarding this file, the appropriate power of attorney documents must be submitted.

The request is **GRANTED**.

Telephone inquiries concerning this decision may be directed to the undersigned at (571) 272-3204. Inquiries regarding the issuance of a certificate of correction should be directed to the Certificates of Correction Branch at (571) 272-4200.

The Certificates of Correction Branch will be notified of this decision granting the petition under 37 CFR 3.81(b) and directing issuance of the requested Certificate of Correction.

Sherry D. Brinkley
Petitions Examiner
Office of Petitions

cc: NICHOLAS P. CHIARA
FLOREK & ENDRESS PLLC
1156 AVENEUE OF AMERICAS
NEW YORK, NY 10036

UNITED STATES PATENT AND TRADEMARK OFFICE

UNITED STATES DEPARTMENT OF COMMERCE
United States Patent and Trademark Office
Address: COMMISSIONER FOR PATENTS
P.O. Box 1450
Alexandria, Virginia 22313-1450
www.uspto.gov

APPLICATION NO.	FILING DATE	FIRST NAMED INVENTOR	ATTORNEY DOCKET NO.	CONFIRMATION NO.
11/270,804	11/09/2005	Anna Helgadottir	30847/40807	8264

4743 7590 07/12/2011
MARSHALL, GERSTEIN & BORUN LLP
233 SOUTH WACKER DRIVE
6300 WILLIS TOWER
CHICAGO, IL 60606-6357

EXAMINER
JOHANNSEN, DIANA B

ART UNIT	PAPER NUMBER
1634	

NOTIFICATION DATE	DELIVERY MODE
07/12/2011	ELECTRONIC

Please find below and/or attached an Office communication concerning this application or proceeding.

The time period for reply, if any, is set in the attached communication.

Notice of the Office communication was sent electronically on above-indicated "Notification Date" to the following e-mail address(es):

mgbdocket@marshallip.com

UNITED STATES PATENT AND TRADEMARK OFFICE

Commissioner for Patents
United States Patent and Trademark Office
P.O. Box 1450
Alexandria, VA 22313-1450
www.uspto.gov

In re Application of	:	
Anna Helgadottir, et al.	:	NOTICE OF WITHDRAWAL
Serial No. 11/270804	:	FROM ISSUE
Filed: November 9, 2005	:	UNDER 37 CFR 1.313(b)
For: METHODS OF DIAGNOSING SUSCEPTIBILITY	:	
TO MYOCARDIAL INFARCTION AND	:	
SCREENING FOR AN LTA4H HAPLOTYPE	:	

The above-identified application is withdrawn from issue after payment of the issue fee due to a mistake on the part of the Office. See 37 CFR 1.313(b).

The above-identified application is hereby withdrawn from issue.

The issue fee is refundable upon written request. If, however, the application is again found allowable, the issue fee can be applied toward payment of the issue fee in the amount identified on the new Notice of Allowance and Issue Fee Due upon written request. This request and any balance due must be received on or before the due date noted in the new Notice of Allowance in order to prevent abandonment of the application.

Telephone inquiries should be directed to the SPE, Dave Nguyen, at (571) 272-0731.

The above-identified application is being forwarded to the examiner for prompt appropriate action, including notifying applicant of the new status of this application.

George C. Elliott

George C. Elliott, Director
Technology Center 1600

MARSHALL, GERSTEIN & BORUN LLP
233 SOUTH WACKER DRIVE
6300 WILLIS TOWER
CHICAGO, IL 60606-6357