WORLD INTELLECTUAL PROPERTY ORGANIZATION

IP SERVICES

Español Français 日本語

Search

Contact us Accessibility Site map

Home IP Services PATENTSCOPE® Patent Search

PATENTSCOPE®

- About Patents
- PCT Resources
- PCT Service Centre
- Datab
  - PC
  - Nat
  - Ext
  - Pat
  - Glc
- Data S
- Public
- Projec
- Patent
- Priorit

Relate

- Patent
- Statist
- Life Sc
- WIPO

(WO/2007/013348) DELIVERY FACILITY FOR TRAVELING BODY FO TRANSPORTATION

Latest bibliographic data on file with the International Bureau

Pub. No.:	**WO/2007/013348**	**International Application No.:**	**PCT/JP2**
Publication Date:	**01.02.2007**	**International Filing Date:**	**20.07.20**

IPC: ***B61B 10/02*** (2006.01), ***B61B 13/12*** (2006.01), ***B61J 1/10*** (2006.01), ***B65G 17/20*** (20

Applicants: **DAIFUKU CO., LTD.** [JP/JP]; 2-11, Mitejima 3-chome, Nishi-Yodogawa-ku, Osaka- (JP) *(All Except US)*.
NAKAMURA, Jiro [JP/JP]; (JP) *(US Only)*.

Inventor: **NAKAMURA, Jiro**; (JP).

Agent: **FUJIKAWA, Tadashi**; 1-22, Nagasunishidori 1-chome Amagasaki-shi, Hyogo 6600

Priority Data: 2005-213748 25.07.2005 JP

Title: (EN) DELIVERY FACILITY FOR TRAVELING BODY FOR TRANSPORTATION
(JA) 搬送用走行体の配送設備

Abstract: (EN) A transportation facility in which an object transported while being suspended from a hanger such as a trolley conveyor is transferred on to a carriage of a carriage-type transportation device only for a certain section of a route. At the start point of transportation of the carriage-type transportation device, there is provided an object receiving means (14) at the under side of a traveling route of a traveling body (5) of the conveyor (1). An object support device (19) of the carriage (16) is lifted relative to the hanger (8) of the traveling body, and the object receiving means (14) is caused to receive the object (W) from the hanger. At the end of the transportation is provided an object return means (15) for

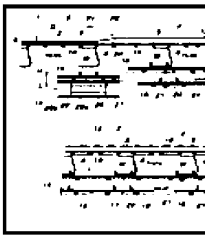

E-New

[redacted] Subsc

lowering the object support device relative to the hanger of the traveling body to transf

hanger. In the transportation route (12) of the carriage-type transportation device, the
switched to a state in which drive is released and a hanger engagement means (20) o
engaged with the hanger so that the traveling body can be pulled and moved by the ca

(JA) not available

Designated States: AE, AG, AL, AM, AT, AU, AZ, BA, BB, BG, BR, BW, BY, BZ, CA, CH, CN, CO, CR, CU
DZ, EC, EE, EG, ES, FI, GB, GD, GE, GH, GM, HN, HR, HU, ID, IL, IN, IS, KE, KG, K
LA, LC, LK, LR, LS, LT, LU, LV, LY, MA, MD, MG, MK, MN, MW, MX, MZ, NA, NG, NI
PH, PL, PT, RO, RS, RU, SC, SD, SE, SG, SK, SL, SM, SY, TJ, TM, TN, TR, TT, TZ,
VN, ZA, ZM, ZW.
African Regional Intellectual Property Org. (ARIPO) (BW, GH, GM, KE, LS, MW, MZ,
UG, ZM, ZW)
Eurasian Patent Organization (EAPO) (AM, AZ, BY, KG, KZ, MD, RU, TJ, TM)
European Patent Office (EPO) (AT, BE, BG, CH, CY, CZ, DE, DK, EE, ES, FI, FR, GE
LT, LU, LV, MC, NL, PL, PT, RO, SE, SI, SK, TR)
African Intellectual Property Organization (OAPI) (BF, BJ, CF, CG, CI, CM, GA, GN, G
SN, TD, TG).

Publication Language: Japanese (JA)

Filing Language: Japanese (JA)

(12) 特許協力条約に基づいて公開された国際出願

(19) 世界知的所有権機関
国際事務局

(43) 国際公開日
2007年2月1日 (01.02.2007)

PCT

(10) 国際公開番号
WO 2007/013348 A1

(51) 国際特許分類:
B61B 10/02 (2006.01) *B61J 1/10* (2006.01)
B61B 13/12 (2006.01) *B65G 17/20* (2006.01)

(21) 国際出願番号: PCT/JP2006/314390

(22) 国際出願日: 2006年7月20日 (20.07.2006)

(25) 国際出願の言語: 日本語

(26) 国際公開の言語: 日本語

(30) 優先権データ:
特願2005-213748 2005年7月25日 (25.07.2005) JP

(71) 出願人 (米国を除く全ての指定国について): 株式会社ダイフク (DAIFUKU CO., LTD.) [JP/JP]; 〒5500012 大阪府大阪市西淀川区御幣島３丁目２番１１号 Osaka (JP).

(72) 発明者; および
(75) 発明者/出願人 (米国についてのみ): 中村 次郎 (NAKAMURA, Jiro) [JP/JP]; 〒5500012 大阪府大阪市西淀川区御幣島３丁目２番１１号 株式会社エイ・ピー・エス内 Osaka (JP).

(74) 代理人: 藤川 忠司 (FUJIKAWA, Tadashi); 〒6600807 兵庫県尼崎市長洲西通１丁目１番２２号 Hyogo (JP).

(81) 指定国 (表示のない限り、全ての種類の国内保護が可能): AE, AG, AL, AM, AT, AU, AZ, BA, BB, BG, BR, BW, BY, BZ, CA, CH, CN, CO, CR, CU, CZ, DE, DK, DM, DZ, EC, EE, EG, ES, FI, GB, GD, GE, GH, GM, HN, HR, HU, ID, IL, IN, IS, KE, KG, KM, KN, KP, KR, KZ, LA, LC, LK, LR, LS, LT, LU, LV, LY, MA, MD, MG, MK, MN, MW, MX, MZ, NA, NG, NI, NO, NZ, OM, PG, PH, PL, PT, RO, RS, RU, SC, SD, SE, SG, SK, SL, SM, SY, TJ, TM, TN, TR, TT, TZ, UA, UG, US, UZ, VC, VN, ZA, ZM, ZW.

(84) 指定国 (表示のない限り、全ての種類の広域保護が可能): ARIPO (BW, GH, GM, KE, LS, MW, MZ, NA, SD, SL, SZ, TZ, UG, ZM, ZW), ユーラシア (AM, AZ, BY, KG, KZ, MD, RU, TJ, TM), ヨーロッパ (AT, BE, BG, CH, CY, CZ, DE, DK, EE, ES, FI, FR, GB, GR, HU, IE, IS, IT, LT, LU, LV, MC, NL, PL, PT, RO, SE, SI, SK, TR), OAPI (BF, BJ, CF, CG, CI, CM, GA, GN, GQ, GW, ML, MR, NE, SN, TD, TG).

[続葉有]

(54) Title: DELIVERY FACILITY FOR TRAVELING BODY FOR TRANSPORTATION

(54) 発明の名称: 搬送用走行体の配送設備

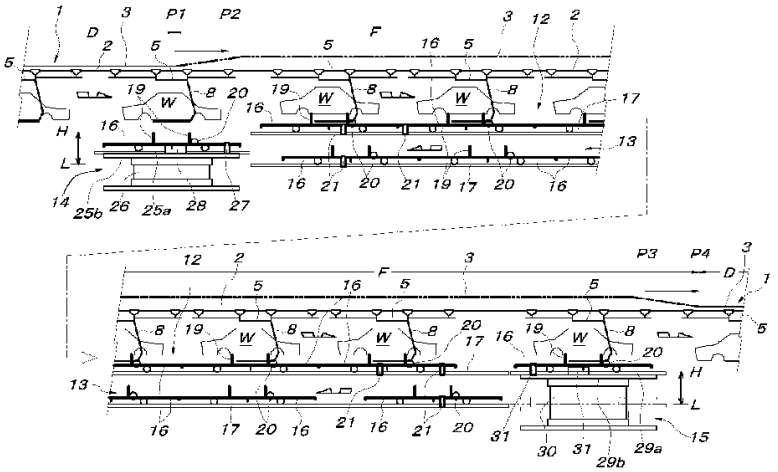

(57) Abstract: A transportation facility in which an object transported while being suspended from a hanger such as a trolley conveyor is transferred on to a carriage of a carriage-type transportation device only for a certain section of a route. At the start point of transportation of the carriage-type transportation device, there is provided an object receiving means (14) at the under side of a traveling route of a traveling body (5) of the conveyor (1). An object support device (19) of the carriage (16) is lifted relative to the hanger (8) of the traveling body, and the object receiving means (14) is caused to receive the object (W) from the hanger. At the end of the transportation is provided an object return means (15) for lowering the object support device relative to the hanger of the traveling body to transfer the object to the hanger. In the transportation route (12) of the carriage-type transportation device, the traveling body is switched to a state in which drive is released and a hanger engagement means (20) of the carriage is engaged with the hanger so that the traveling body can be pulled and moved by the carriage.

[続葉有]

WO 2007/013348 A1

添付公開書類:
— 国際調査報告書

２文字コード及び他の略語については、定期発行される各*PCT*ガゼットの巻頭に掲載されている「コードと略語のガイダンスノート」を参照。

(57) 要約:

トロリーコンベヤなどのハンガーによって吊り下げ搬送される被搬送物を、当該被搬送物に対する作業などのために一定区間だけ台車式搬送装置の台車上に移し換えて搬送できる搬送設備を提供するものであって、トロリーコンベヤ（１）の走行体（５）の走行経路の下側に配設された台車式搬送装置の搬送開始端に、台車（１６）の被搬送物支持具（１９）を走行体のハンガー（８）に対して相対的に上げて当該ハンガーから被搬送物（W）を受け取らせる被搬送物受取手段（１４）が設けられ、搬送終了端には、前記被搬送物支持具を走行体のハンガーに対して相対的に下げて当該ハンガーに被搬送物を移載する被搬送物戻し手段（１５）を備えた搬送設備であって、台車式搬送装置の搬送経路（１２）では、走行体が駆動解除状態に切り換えられると共に台車のハンガー係止手段（２０）がハンガーを係止して当該走行体を台車が牽引移動させるようにした。

明 細 書

搬送用走行体の配送設備

技術分野

[0001] 本発明は、トロリーコンベヤや自走電車に設けられたハンガーによって吊り下げ搬送される被搬送物を一定区間だけ台車式搬送装置の台車上に移し換えて搬送する搬送設備に関するものである。

背景技術

[0002] 例えば自動車の組立ラインでは、トロリーコンベヤの走行体や自走電車に設けられたハンガーで吊り下げ搬送される車体にエンジンやドアーなどを組み付ける作業が行われるが、この場合、ハンガーで支持された車体に対する部品組み付け作業を台車式搬送装置の台車上で行うことが知られている。このような場合に使用できる搬送設備としては、例えば特許文献1に記載されるように、車体を支持するハンガーを備えた走行体(プッシャーで駆動されるトロリーコンベヤの走行体)を床側の搬送装置と同期させて走行させ、床側の搬送装置上から前記ハンガーで吊り下げ搬送される車体に対する部品組み付け作業などを行うように構成された搬送設備や、特許文献2に記載された搬送設備のように、ハンガーで吊り下げ搬送される被搬送物を、当該ハンガーを備えたトロリーコンベヤの走行体や自走電車と同期走行する台車式搬送装置の台車上に移し替え、当該台車上での作業終了後に再び台車上の車体をハンガーに戻すように構成された搬送設備が知られている。

特許文献1:特公平4－5581号公報

特許文献2:特開平7－157073号公報

発明の開示

発明が解決しようとする課題

[0003] しかしながら、上記のような従来周知の搬送設備では、作業完了までの間、車体などの被搬送物を吊り下げ搬送する被搬送物吊下式搬送装置(トロリーコンベヤの走行体や自走電車)と作業者が搭乗して作業を行う台車式搬送装置(台車)とを同期運転する必要があり、両搬送装置の制御に高度の技術を必要とするばかりでなく、特許

文献1に記載されたような搬送設備を使用するときは、被搬送物を吊り下げるハンガーが邪魔になるような場所に対する部品組み付け作業が行えない。

課題を解決するための手段

[0004] 本発明は上記のような従来の問題点を解消し得る搬送設備を提供することを目的とするものであって、請求項1に記載の本発明に係る搬送設備は、後述する実施形態の参照符号を括弧付きで付して示すと、被搬送物吊下式搬送装置（P＆F形式のトロリーコンベヤ(1)）と、台車式搬送装置(11)と、被搬送物受取手段(14)と、被搬送物戻し手段(15)とを備えた搬送設備であって、前記被搬送物吊下式搬送装置（P＆F形式のトロリーコンベヤ(1)）は、被搬送物支持用ハンガー(8)が設けられた走行体(5)を備えると共に、この走行体(5)の走行経路中には、当該走行体(5)を強制走行させる駆動区間(D)と、当該走行体(5)を移動自由な状態とする駆動解除区間(F)とが設けられ、前記台車式搬送装置(11)は、前記走行体(5)の走行経路の駆動解除区間(F)の下側で当該走行経路に沿って走行可能な台車(16)を備えると共に、当該台車(16)上には被搬送物支持具(19)が設けられ、前記被搬送物受取手段(14)は、前記台車式搬送装置(11)の搬送開始端において前記被搬送物支持具(19)を前記走行体(5)のハンガー(8)に対して相対的に上げて当該ハンガー(8)から被搬送物(W)を前記被搬送物支持具(19)に移載する手段であり、前記被搬送物戻し手段(15)は、前記台車式搬送装置(11)の搬送終了端において前記被搬送物支持具(19)を前記走行体(5)のハンガー(8)に対して相対的に下げて当該被搬送物支持具(19)からハンガー(8)に被搬送物(W)を移載する手段である搬送設備において、

前記被搬送物吊下式搬送装置（P＆F形式のトロリーコンベヤ(1)）の走行体(5)の被搬送物支持用ハンガー(8)には、被係止部(42a)が設けられ、前記台車式搬送装置(11)の台車(16)には、前記ハンガー(8)の被係止部(42a)に対し係脱自在なハンガー係止手段(20)が設けられ、前記台車式搬送装置(11)の搬送経路(12)では、前記ハンガー係止手段(20)が前記ハンガー(8)の被係止部(42a)と係合し、駆動解除状態に切り換えられている前記被搬送物吊下式搬送装置（P＆F形式のトロリーコンベヤ(1)）の走行体(5)を前記台車(16)が前記ハンガー(8)を介して牽引移動させる構成となっている。

[0005] 上記構成の本発明を実施するについて、前記被搬送物吊下式搬送装置は、走行用駆動手段を備えているが特定区間では自由に前後に遊動させることができる駆動解除状態とすることができる自走電車に被搬送物支持用ハンガー(8)を吊り下げたものでも良いが、請求項2に記載のように、前記被搬送物吊下式搬送装置は、その走行体(5)の走行経路に沿って移動するプッシャーで当該走行体(5)を推進させるトロリーコンベヤ(1)により構成し、前記駆動解除区間(F)では、前記トロリーコンベヤ(1)の走行体(5)がプッシャーから切り離されて駆動解除状態に切り換えられるように構成することができる。

[0006] 前記被搬送物受取手段(14)及び被搬送物戻し手段(15)は、台車(16)に対して被搬送物支持具(19)を昇降させる構成によって実現することもできるが、請求項3に記載のように、台車(15)自体を昇降させる昇降ガイドレール(25a,29a)によって構成することができる。

[0007] ハンガー(8)から台車(16)上(被搬送物支持具(19)上)に移載された被搬送物(W)に対する部品組み込み作業などの作業部位(Wa)がハンガー(8)と重なるような場合、即ち、被搬送物(W)から切り離されたハンガー(8)が作業の邪魔になるような場合は、当該ハンガー(8)と台車(16)上の被搬送物(W)とを前後方向に所定距離だけ相対移動させれば良いが、この場合、請求項4に記載のように、前記ハンガー係止手段(20)を、前記台車式搬送装置(11)の搬送開始端においてハンガー(8)から被搬送物(W)を受け取った被搬送物支持具(19)と当該ハンガー(8)とが相対的に一定距離前後方向に移動したときにハンガー(8)側の被係止部(42a)に対応する位置に設け、前記台車式搬送装置(11)の搬送終了端においては、被搬送物(W)を支持する被搬送物支持具(19)とハンガー(8)とを元の前後方向相対位置に戻した後、前記被搬送物戻し手段(15)を動作させるように構成すれば良い。この場合の前記台車式搬送装置(11)の搬送開始端及び搬送終了端における被搬送物支持具(19)とハンガー(8)との相対的前後方向移動は、例えば、請求項5に記載のように台車(16)そのものを前後方向に移動させることによって実現できるが、その他、台車(16)に対して当該台車(16)上の被搬送物支持具(19)を前後方向に移動させる方法や、定位置にある台車(16)に対してハンガー(8)(当該ハンガー(8)を備えたトロリーコンベヤ(1)の走行体(5)や当該ハンガー(8)を

備えた自走電車など)を前後方向に移動させる方法によっても実現できる。

[0008] 前記台車式搬送装置(11)は、先に説明したように自走可能な電車を利用したものであっても良いが、自走できない台車(16)を台車走行経路側に配設された台車駆動手段(摩擦駆動手段(21))により推進させる構成のものである場合は、請求項6に記載のように、前記被搬送物受取手段(14)には、台車(16)を搬送経路(12)側へ送り出す台車送り出し手段(台車引き込み送り出し手段(27))と、支持する台車(16)を、前記ハンガー係止手段(20)がハンガー(8)の被係止部(42a)に対応する位置まで前後方向に移動させる台車用フィーダー(28)とを設け、前記被搬送物戻し手段(15)には、搬送経路(12)から送り込まれる台車(16)を所定位置まで引き込む台車引き込み手段(台車引き込み送り出し手段(31))と、支持する被搬送物(W)とハンガー(8)とが元の前後方向相対位置に戻るように台車(16)を前後方向に復帰移動させる台車用フィーダー(32)とを設けることができる。この場合、請求項7に記載のように、前記台車用フィーダー(28,32)は、台車(16)に設けられた被把持部(55)を前後から挟持する前後一対の開閉挟持片(56a,56b)と、この開閉挟持片(56a,56b)の開閉用駆動手段(57)と、前記開閉挟持片(56a,56b)を前後方向に往復移動させる移動用駆動手段(58)とから構成することができる。

[0009] 前記被搬送物吊下式搬送装置(トロリーコンベヤ(1))のハンガーは、当該ハンガー(8)が支持する被搬送物(W)を台車(16)側の被搬送物支持具(19)で下から受け取らせることができる構成のものであれば、如何なる構成のものでも良いが、自動車組立ラインなどで使用される車体支持用ハンガーとして一般的なハンガー、即ち、左右横方向に開閉する左右一対のハンガーアーム(10a,10b)を備えたものであるときは、請求項8に記載のように、前記ハンガー係止手段(20)は、左右各ハンガーアーム(10a,10b)に設けられた被係止部(42a,42b)に対し係脱自在な左右一対の係止具(34a,34b)と、この左右一対の係止具(34a,34b)を連動させて係脱動作させる1つの係止具位置切り換え手段(35a)又は(35b)とから構成することができる。この場合、請求項9に記載のように、前記左右一対の係止具(34a,34b)は、スプリング(40a,40b)により被係止部(42a,42b)に係合する上位置に付勢保持させると共に、各係止具(34a,34b)それぞれに連動昇降するカム従動ローラー(39a,39b)を台車(16)側に設け、前記係止具位置切り換え

手段(35a)又は(35b)は前記被搬送物受取手段(14)及び被搬送物戻し手段(15)の位置に台車(16)があるときに当該台車(16)側の前記カム従動ローラー(39a,39b)と係合するように前記被搬送物受取手段(14)及び被搬送物戻し手段(15)にそれぞれ併設されたカムレール(52a,52b)と、これらカムレール(52a,52b)を昇降させるカムレール駆動手段(シリンダーユニット(54))とから構成することができる。更にこの場合、請求項10に記載のように、前記左右一対の係止具(34a,34b)は、左右横向きに配置され且つ中間に支点を有する左右一対のシーソー運動体(37a,37b)の外端にそれぞれ設け、両シーソー運動体(37a,37b)の内端に昇降体(38a,38b)を連動連結すると共に当該昇降体(38a,38b)の下端に前記カム従動ローラー(39a,39b)を軸支することができる。

[0010] 又、前記ハンガー係止手段(20)を、前記ハンガー(8)に設けられた被係止部(42a)に対し上下方向に嵌合離脱自在な係止具(34a)と、この係止具(34a)を昇降移動させる係止具位置切り換え手段(35a)又は(35b)とから構成する場合、請求項11に記載のように、前記係止具(34a)は、前記被係止部(42a)を挟む前後一対の係止部(43a,43b)を備えたものとし、この前後一対の係止部(43a,43b)の内、被係止部(42a)を後押しする後側係止部(43b)は、一定範囲内前後移動自在に構成すると共にスプリング(47)により前側定位置に付勢保持させ、当該後側係止部(43b)が前記スプリング(47)に抗して後方に移動したことを検知するためのセンサー(51)を併設することができる。

発明の効果

[0011] 上記請求項1に記載の本発明に係る搬送設備によれば、被搬送物吊下式搬送装置の被搬送物支持用ハンガーによって吊り下げ搬送している被搬送物に対し部品組み付け作業などを行う区間の床側に台車式搬送装置を設置し、この台車式搬送装置の搬送開始端に対応する定位置で被搬送物吊下式搬送装置の走行体(ハンガー)を停止させた状態で当該搬送開始端に配設された被搬送物受取手段を動作させることにより、前記ハンガーに支持されていた被搬送物を前記台車式搬送装置の台車上に乗り移らせ、台車式搬送装置の搬送終了端までは前記台車の被搬送物支持具で支持させた状態で被搬送物を搬送させることができるので、当該被搬送物に対する部品組み付け作業などを前記台車上で容易に行うことができるのであるが、このとき、被搬送物をそれまで支持していた空のハンガーは前記台車が備えるハンガ

一係止手段で当該台車と一体化させ、台車の走行により空のハンガーを介して被搬送物吊下式搬送装置の走行体(ハンガー)を牽引走行させることができる。従って、被搬送物を台車側に移載している間、被搬送物吊下式搬送装置の走行体(ハンガー)を台車と同期させて前進走行させるための手段や制御が全く不要になり、搬送設備全体の構成を簡略化して大幅なコストダウンを図ることができる。

[0012] 勿論、台車式搬送装置の搬送終了端まで台車によって搬送した被搬送物は、当該搬送終了端で被搬送物戻し手段の動作により台車に牽引されてきた被搬送物吊下式搬送装置の走行体(ハンガー)側に戻し、以降はこの被搬送物吊下式搬送装置の走行体(ハンガー)によって吊り下げ搬送させることができるのであるが、このときも被搬送物を台車側から受け取る被搬送物吊下式搬送装置の走行体(ハンガー)は当該台車とハンガー係止手段で一体化されていたのであるから、両者間の被搬送物の移載が安全確実に行えるように、台車とは切り離されて走行していた被搬送物受取側の走行体(ハンガー)を台車側に対して位置合わせする必要がなく、台車式搬送装置の搬送終了端での当該台車式搬送装置から被搬送物吊下式搬送装置への安全確実な被搬送物の戻し作業も容易に行わせることができる。

[0013] 尚、請求項2に記載の構成によれば、走行体走行体の走行経路に沿って移動するプッシャーで当該走行体を推進させるトロリーコンベヤを被搬送物吊下式搬送装置に活用して、本発明の搬送設備を容易に実施することができる。又、請求項3に記載の構成によれば、被搬送物受取手段及び被搬送物戻し手段を、台車に対して被搬送物支持具を昇降させる構成によって実現する場合よりも、数多く必要な台車の構成がシンプルになり、本発明の搬送設備を容易且つ安価に実施することができるばかりでなく、台車式搬送装置の台車による搬送経路の下側を空台車の戻し経路に構成した場合に必要な、台車式搬送装置の搬送開始端及び搬送終了端に必要な台車昇降手段(昇降ガイドレール)で前記被搬送物受取手段及び被搬送物戻し手段を兼ねさせることができる。

[0014] 又、台車式搬送装置の台車上に被搬送物を移載した後の空になったハンガーをそのままの位置で台車にハンガー係止手段で一体化したのでは、当該被搬送物に対する部品組み込み作業などの作業対象箇所が空になったハンガーと重なって作業

の邪魔になるような場合には、請求項4に記載の構成を採用することにより、当該被搬送物の作業対象箇所を空になったハンガーから前後方向に離して、空になったハンガーに邪魔されることなく当該被搬送物の作業対象箇所に対する作業を容易に行うことができる。この場合、請求項5に記載の構成によれば、請求項4に記載の構成を簡単容易に実施することができる。

[0015] 前記台車式搬送装置が、自走できない台車を台車走行経路側に配設された台車駆動手段により推進させる構成のものである場合は、請求項6や請求項7に記載の構成を採用することにより、請求項5に記載の構成を含めて本発明を簡単容易に実施することができる。

[0016] 前記被搬送物吊下式搬送装置のハンガーが、自動車組立ラインなどで使用される車体支持用ハンガーとして一般的なハンガー、即ち、左右横方向に開閉する左右一対のハンガーアームを備えたものであるときは、請求項8に記載の構成を採用することにより、左右一対のハンガーアームの何れか片側のハンガーアームのみを台車側にハンガー係止手段で係止一体化させる場合よりも、ハンガーを介して被搬送物吊下式搬送装置の走行体を台車で牽引させる作用を無理なく確実に行わせることができる。しかも、左右一対のハンガーアームを各別に係止する左右一対の係止具を1つの係止具位置切り換え手段により係止作用位置と係止解除位置とに切り換えることができるので、各係止具ごとに係止具位置切り換え手段を設ける場合よりも制御が簡単になる。

[0017] 上記の請求項8に記載の構成を採用する場合、請求項9に記載のように実施することにより、台車式搬送装置の台車による搬送経路の全域にわたって前記左右一対の係止具を位置切り換え手段で係止作用位置に保持する必要がなく、前記左右一対の係止具を係止作用位置に切り換えたり係止解除位置に切り換えたりするための手段として、前記被搬送物受取手段及び被搬送物戻し手段の位置にのみカムレールと当該カムレールを昇降させるカムレール駆動手段とを配設しておくだけで良いので、台車側に前記左右一対の係止具を位置切り換えのための駆動源を設けなければならない場合よりも、容易且つ安価に本発明を実施することができる。更にこの場合、請求項10に記載の構成によれば、前記左右一対の係止具はハンガーの左右一対

のハンガーアームに対応させて台車の左右両側に配設しながら、両係止具に連動する左右一対の昇降するカム従動ローラーは台車の左右巾方向の中央側に寄せて配設することができ、前記被搬送物受取手段及び被搬送物戻し手段の位置に各カム従動ローラーに対応して配設される左右一対のカムレールを一体化し、1つのカムレール駆動手段で一体に昇降駆動することが容易になる。

[0018] 又、請求項11に記載の構成によれば、ハンガー係止手段で台車に係止一体化したハンガーを介して被搬送物吊下式搬送装置の走行体を台車で牽引している状況において、被搬送物吊下式搬送装置の走行体が何らかの原因で円滑な走行が行えない事態に陥り、台車に対してハンガー側が大きな抵抗になった場合、センサーで係る事態を速やかに検知させることができるので、当該センサーの検知信号に基づいて台車の推進駆動に非常停止をかけるなど、必要な対策を自動的にとらせることが容易に行える。

図面の簡単な説明

[0019] [図1]本発明の搬送設備の全体の構成を説明する概略側面図である。

[図2]被搬送物受取手段で吊下搬送されてきた被搬送物を受け取る直前の状態を説明する側面図である。

[図3]図2の状態から1段階進んだ状態を説明する側面図である。

[図4]図3の状態から1段階進んだ状態を説明する側面図である。

[図5]図4の状態から1段階進んだ状態を説明する側面図である。

[図6]被搬送物受取手段から台車式搬送装置の搬送経路へ台車が送り出されるときの状態を説明する側面図である。

[図7]被搬送物戻し手段での作用を説明する側面図である。

[図8]被搬送物受取手段及び被搬送物戻し手段の構成を説明する正面図である。

[図9]ハンガー係止手段の構成を説明する図で、A図は係止作用状態にあるハンガー係止手段を示す正面図、B図は係止解除状態にあるハンガー係止手段を示す正面図である。

[図10]ハンガー係止手段の係止具の具体的構成を説明する側面図である。

[図11]A図～C図はハンガー係止手段の各段階での状態を説明する側面図である。

[図12]A図～C図は台車用フィーダーの各段階での状態を説明する側面図である。

符号の説明

[0020] 1　パワー＆フリー形式のトロリーコンベヤ(被搬送物吊下式搬送装置)

2　フリーライン

3　パワーライン

4, 4a　トロリー

5　走行体

6　被動用ドッグ

8　被搬送物支持用ハンガー

9c　ハンガーアームの被搬送物支持部

10a, 10b　左右一対のハンガーアーム

11　台車式搬送装置

12　搬送経路

13　台車戻り経路

14　被搬送物受取手段

15　被搬送物戻し手段

16　台車

19　被搬送物支持具

20　ハンガー係止手段

21　摩擦駆動手段

22a, 22b　左右一対の帯状垂直摩擦面

23　モーター駆動の摩擦駆動輪

24　バックアップローラー

25a、29a　昇降ガイドレール

25b, 29b　昇降台

26, 30　昇降用駆動手段

27, 31　台車引き込み送り出し手段

28, 32　台車用フィーダー

34a, 34b　左右一対の係止具

35a, 35b　係止具位置切り換え手段

37a, 37b　シーソー運動体

38a, 38b　左右一対の棒状昇降体

39a, 39b　カム従動ローラー

40a, 40b　引張スプリング

42a, 42b　ハンガーの被係止部

43a, 43b　前後一対の係止部(ローラー)

44a　L形アーム部

44b　軸受け部材

46　レバーアーム

47　スプリング

51　過負荷検知用センサー

52a, 52b　左右一対のカムレール

54　カムレール駆動手段(シリンダーユニット)

55　台車側の被把持部

56a, 56b　前後一対の開閉挟持片

57　開閉用駆動手段

58　移動用駆動手段

60　可動部材

61　スライドガイド

62　中継ロッド

63, 66　シリンダーユニット

65　リンク

D　トロリーコンベヤの駆動区間

F　トロリーコンベヤの駆動解除区間

W　被搬送物

発明を実施するための最良の形態

[0021] 以下に本発明の具体的実施例を添付図に基づいて説明すると、図1及び図2において、1は被搬送物吊下式搬送装置として本実施形態で使用した従来周知のパワー&フリー形式のトロリーコンベヤであり、下側ガイドレールで構成されるフリーライン2と上側ガイドレールで構成されたパワーライン3とを備え、フリーライン2には、複数のトロリー4，4aを介して走行体5が走行可能に吊り下げられ、パワーライン3の上側ガイドレールには、前記走行体5の先頭のトロリー4aに設けられた被動用ドッグ6に係脱自在なプッシャーを適当間隔おきに備えた駆動用チエンがトロリーを介して吊り下げられ、フリーライン2とパワーライン3との上下間隔が、パワーライン3側のプッシャーがフリーライン2側の走行体5の被動用ドッグ6に係合し得る間隔に設定されている駆動区間Dでは、前記走行体5がプッシャーによりフリーライン2に沿って推進せしめられ、フリーライン2とパワーライン3との上下間隔が上記間隔よりも広くなるか又はフリーライン2上からパワーライン3が横側方に離れる駆動解除区間Fでは、プッシャーによる前記走行体5の駆動が解除され、当該走行体5がフリーライン2上で停止し、フリーライン2に併設された位置決め手段がなければフリーライン2上で自由に遊動できる状態になる。

[0022] 尚、図1に仮想線で示した駆動解除区間Fにおけるパワーライン3は、フリーライン2から上方に離間させてあり、当該駆動解除区間Fの下手側の駆動区間Dで再び元の高さに戻されるように構成しているが、当該駆動解除区間Fにおけるパワーライン3を横側方に迂回させることもできるし、当該駆動解除区間Fの下手側の駆動区間Dで使用されるパワーライン3として、駆動解除区間Fの上手側の駆動区間Dで使用されるパワーライン3とは別の駆動手段で駆動される別系統のパワーライン3を使用することもできる。

[0023] トロリーコンベヤ1の走行体5には被搬送物支持用ハンガー8が吊り下げられている。このハンガー8は、図2及び図8に示すように、左右一対のハンガーアーム10a，10bから成るもので、各ハンガーアーム10a，10bは、縦杆部9aと当該縦杆部9aの下端からほぼ水平後方に延出する水平杆部9b、及び水平杆部9bから内向きに連設された被搬送物支持部9cから構成されている。自動車の車体などの被搬送物Wは、図8に示すように、正面から見て両ハンガーアーム10a，10bの縦杆部9aの内側に納ま

る状態で、その底部の左右両側辺が両ハンガーアーム10a，10bの被搬送物支持部9cで支持される。尚、両ハンガーアーム10a，10bは被搬送物Wの積み下ろしのために左右横方向に開閉運動可能に構成されている。

[0024] 図1において、11は台車式搬送装置であって、トロリーコンベヤ1の駆動解除区間Fにおけるフリーライン2の直下で当該フリーライン2と平行に配設された搬送経路12、当該搬送経路12の下側に当該搬送経路12と平行に配設された台車戻り経路13、搬送経路12の搬送開始端に配設された被搬送物受取手段14、及び搬送経路12の搬送終了端に配設された被搬送物戻し手段15から構成され、複数台の台車16が被搬送物受取手段14から搬送経路12、被搬送物戻し手段15、台車戻り経路13をこの順に経由して被搬送物受取手段14に戻るように循環走行するものである。而して各台車16は、1つの被搬送物Wより適当長さだけ全長が長いもので、搬送経路12や台車戻り経路13側のガイドレール17に車輪18を介して直進走行可能に支持され、被搬送物支持具19とハンガー係止手段20とを備えたものであるが、走行用駆動手段は設けられておらず、走行経路脇に配設された摩擦駆動手段21（図1参照）から受ける推進力によって走行する。摩擦駆動手段21は、図8に示すように、被搬送物受取手段14や被搬送物戻し手段15に併設される台車引き込み送り出し手段27，31と同様に、台車16の走行方向と平行で台車16の全長にわたって連続するように台車16に設けられた左右一対の帯状垂直摩擦面22a，22b（図示例では、台車16の左右両側面をそのまま利用している）の内、一方の摩擦面22aに圧接するモーター駆動の摩擦駆動輪23と、他方の摩擦面22bに当接するバックアップローラー24との組み合わせから構成されている。

[0025] 上記の摩擦駆動手段21は、図1に示すように台車式搬送装置11の搬送経路12や台車戻り経路13の適当位置に必要に応じて制動手段などと共に配設され、搬送経路12では、被搬送物受取手段14からこの搬送経路12内に送り出される台車16を引き継いで、直後の台車16が直前の台車16を後押しする前後突き合いの状態で搬送経路12の終端まで定速で推進させ、被搬送物戻し手段15が台車受入可能になったときに搬送経路12の終端から当該被搬送物戻し手段15へ台車16を1台ずつ送り出すように構成され、台車戻り経路13では、被搬送物戻し手段15からこの台車戻り経

路13内に送り出される台車16を引き継いで被搬送物受取手段14側へ高速走行させ、被搬送物受取手段14が台車受入可能になったときに台車戻り経路13の終端から当該被搬送物受取手段14へ台車16を1台ずつ送り出すように構成されている。

[0026] 被搬送物受取手段14は、図2に示すように、1台の台車16を支持し得る長さの昇降ガイドレール25aが敷設された昇降台25bと、この昇降台25bを、昇降ガイドレール25aが搬送経路12のガイドレール17の始端に接続する上昇限レベルHと昇降ガイドレール25aが台車戻り経路13のガイドレール17の終端に接続する下降限レベルLとの間で昇降させる昇降用駆動手段26とから構成され、昇降台25bには、台車引き込み送り出し手段27と台車用フィーダー28とが搭載されている。被搬送物戻し手段15は、図7に示すように、1台の台車16を支持し得る長さの昇降ガイドレール29aが敷設された昇降台29bと、この昇降台29bを、昇降ガイドレール29aが搬送経路12のガイドレール17の終端に接続する上昇限レベルHと昇降ガイドレール29aが台車戻り経路13のガイドレール17の始端に接続する下降限レベルLとの間で昇降させる昇降用駆動手段30とから構成され、昇降台29bには、台車引き込み送り出し手段31と台車用フィーダー32とが搭載されている。昇降用駆動手段26, 30には、クロスリンク機構方式やラックピニオンギヤ方式、シリンダーによる直接昇降駆動方式など、従来周知の各種方式のものが利用される。

[0027] 各台車16に設けられたハンガー係止手段20は、図8及び図9に示すように、左右一対の係止具34a, 34bと、両係止具34a, 34bを係止作用上位置と係止解除下位置とに切り換える係止具位置切り換え手段35a, 35bとから構成されている。而して、左右一対の係止具34a, 34bは、左右対称形に配置されると共に中央部が前後方向水平支軸36a, 36bで台車16側に軸支された左右一対のシーソー運動体37a, 37bの外端に設けられ、各シーソー運動体37a, 37bの内端には、台車16側に昇降のみ可能に支持された左右一対の棒状昇降体38a, 38bの上端部がそれぞれ長孔とピンとを介して連結され、これら両棒状昇降体38a, 38bの下端外側にはカム従動ローラー39a, 39bが左右方向水平支軸で軸支され、各シーソー運動体37a, 37bの内端側と台車16側との間に掛張された引張スプリング40a, 40bにより、各シーソー運動体37a, 37bの内端側が台車16側のストッパー41a, 41bで受け止められるように各

シーソー運動体37a，37bが付勢されている。従って、両カム従動ローラー39a，39bに下向きの操作力が働いていない状況では、各係止具34a，34bが係止作用上位置に保持されると共に両棒状昇降体38a，38bが上昇限まで上昇して両カム従動ローラー39a，39bが上昇限に同心状で位置する状態にある。

[0028] 左右一対の係止具34a，34bは、図10に示すように、被搬送物支持用ハンガー8の左右一対のハンガーアーム10a，10bにおける被搬送物支持部9cの基部で構成された被係止部42a，42bを前後から挟む前後一対の係止部43a，43bから構成されている。これら各係止部43a，43bは、各係止具34a，34bが係止作用上位置にあるとき（シーソー運動体37a，37bが水平姿勢にあるとき）に左右方向水平向きとなる支軸で軸支されたローラーから構成され、搬送経路12における台車走行方向側に位置する前側係止部43aのローラーは、シーソー運動体37a，37bの外端から連設されたL形アーム部44aの先端に軸支され、ハンガー8を後押しする後側係止部43bのローラーは、シーソー運動体37a，37bの外端から連設された軸受け部材44bに前記ローラーを軸支する支軸と平行な支軸45で中間位置が軸支されたレバーアーム46の上端に軸支されて、前側係止部43aのローラーに対して遠近方向（前後方向）に一定範囲内で移動可能に構成され、前記レバーアーム46の下端部を押圧付勢するスプリング47により、前側係止部43aのローラーとの間に被係止部42a，42bが相対的に嵌入する凹部を形成する位置に付勢保持されている。尚、前記スプリング47は、軸受け部材44bの先端に支軸48で軸支され且つレバーアーム46の下端部を貫通する軸杆49の遊端部に螺嵌されたバネ受け座50aと、当該軸杆49に軸方向遊動自在に遊嵌された可動バネ受け座50bとの間で軸杆49に遊嵌され、可動バネ受け座50を介してレバーアーム46の下端部を付勢する。

[0029] 上記構成の左右一対の係止具34a，34bには、過負荷検知用センサー51がそれぞれ併設されている。このセンサー51は、軸受け部材44bに取り付けられたリミットスイッチから構成されたもので、各係止具34a，34bにおけるレバーアーム46の上端外側に付設された当接部材46aを介して、当該レバーアーム46（後側係止部43b）がスプリング47の付勢力に抗して一定角度揺動したことを検知する。

[0030] 係止具位置切り換え手段35aは、図2に示すように被搬送物受取手段14の昇降台

26に設けられ、係止具位置切り換え手段35bは、図7に示すように被搬送物戻し手段15の昇降台31に設けられており、各係止具位置切り換え手段35a，35bは、台車16が被搬送物受取手段14の昇降ガイドレール25又は被搬送物戻し手段15の昇降ガイドレール30の定位置に乗り移ったとき、図8及び図9に示すように、当該台車16の両カム従動ローラー39a，39bが各別に嵌合する左右一対のカムレール52a，52bと、両カムレール52a，52bを支持する1つの昇降台53を昇降駆動するカムレール駆動手段（シリンダーユニット）54とから構成されている。

[0031] 被搬送物受取手段14の昇降台25bに設けられた台車用フィーダー28と被搬送物戻し手段15の昇降台29bに設けられた台車用フィーダー32とは、図8及び図12に示すように、台車16の底部の左右一側部に下向きに突設された被把持部55を前後から挟持する前後一対の開閉挟持片56a，56bと、この開閉挟持片56a，56bの開閉用駆動手段57と、前記開閉挟持片56a，56bを前後方向に往復移動させる移動用駆動手段58とから構成されている。具体的に説明すると、前後一対の開閉挟持片56a，56bと開閉用駆動手段57とは、昇降台25b，29bに付設されたスライドガイドレール59を介して昇降ガイドレール25a，29a上での台車16の前後移動方向に移動自在に支持された可動部材60に取り付けられ、移動用駆動手段58は、前記可動部材60に一端が連結され且つ昇降台25b，29bに付設されたスライドガイド61によって前後方向移動自在に支持された中継ロッド62の他端と昇降台25b，29bとの間に介装されたシリンダーユニット63によって構成されている。

[0032] 前後一対の開閉挟持片56a，56bは、それぞれ支軸64a，64bによって前記可動部材60に軸支されると共に、リンク65によって互いに連動して開閉運動するように連動連結され、一方の開閉挟持片56aと前記可動部材60との間に、開閉用駆動手段57を構成するシリンダーユニット66が介装されている。従って、シリンダーユニット66のピストンロッドの出し入れにより前後一対の開閉挟持片56a，56bを開閉動作させることができ、シリンダーユニット63のピストンロッドの出し入れにより、前後一対の開閉挟持片56a，56bを開閉用駆動手段57（シリンダーユニット66）と共に前後移動させることができる。

[0033] 以下、上記構成の搬送設備の使用方法について説明すると、トロリーコンベヤ1の

駆動区間Dを駆動解除区間Fに向かって走行する走行体5、即ち、ハンガー8により被搬送物Wを吊り下げた走行体5は、図1及び図2に示す駆動区間Dの終端位置（駆動解除区間Fの始端位置）P1で駆動解除されるので、フリーライン2に併設された適当な補助フィーダー（図示省略）により、被搬送物受取手段14の上方定位置にハンガー8が位置する定停止位置P2まで移動させる。勿論、トロリーコンベヤ1の駆動区間Dの終端位置P1で走行体5を精度良く停止させることができるならば、前記駆動区間Dの終端位置P1を被搬送物受取手段14に対する定停止位置P2の位置に設定して、前記補助フィーダーを無くすことも可能である。

[0034] 一方、被搬送物受取手段14では、昇降台25bを下降限レベルLに下降させ、台車式搬送装置11における台車戻り経路13のガイドレール17上から被搬送物受取手段14における昇降ガイドレール25a上の定位置まで1台の空台車16を、台車戻り経路13の終端に併設されている摩擦駆動手段21と前記昇降台25b側の台車引き込み手段27とで移載させる。台車戻り経路13上の空台車16のハンガー係止手段20は、その左右一対の係止具34a，34bが、図9に示すスプリング40a，40bの付勢力で係止作用上位置に保持されている状態であるから、当該空台車16を引き込む側の被搬送物受取手段14側では、昇降台25bに配設されている係止具位置切り換え手段35aのカムレール52a，52bをカムレール駆動手段（シリンダーユニット）54により下降限レベルまで下げておき、昇降ガイドレール25a上に引き込まれる空台車16のハンガー係止手段20における左右一対のカム従動ローラー39a，39bを係止具位置切り換え手段35aのカムレール52a，52b内に進入させる（図9A参照）。そして空台車16が定位置まで引き込まれて停止したならば、係止具位置切り換え手段35aのカムレール52a，52bをカムレール駆動手段（シリンダーユニット）54により上昇限レベルまで上昇させ、カム従動ローラー39a，39bを介してシーソー運動体37a，37bをスプリング40a，40bの付勢力に抗して揺動させることにより、左右一対の係止具34a，34bを係止解除下位置に切り換えておく（図9B参照）。尚、図1に示すように、空台車16が定位置に移載された被搬送物受取手段14の昇降台25bは、下降限レベルLと上昇限レベルHとの間の中間レベルまで上昇させた状態で待機させておくことができる。

[0035] 先に述べたように、トロリーコンベヤ1の走行体5が被搬送物受取手段14に対する定停止位置P2で停止したならば、図3に示すように、空台車16を定位置に支持している被搬送物受取手段14の昇降台25bを上昇限レベルHまで上昇させる。この結果、空台車16の被搬送物支持具19が走行体5のハンガー8に支持されていた被搬送物Wを持ち上げ、当該被搬送物Wをハンガー8から所定高さdだけ浮上させることになる。このとき、係止解除下位置に切り換えられているハンガー係止手段20の左右一対の係止具34a，34bは、図11Aに示すように、被搬送物Wを支持していたハンガー8の被係止部42a，42bよりも一定距離だけ前方で且つ下方位置にある。又、被搬送物受取手段14の昇降台25bに配設されている台車用フィーダー28は、図12Aに示すように前後一対の開閉挟持片56a，56bが、当該昇降ガイドレール25a上の定位置に停止した台車16の被把持部55の真下位置で前後に開いた状態（シリンダーユニット66のピストンロッドが引き込まれた状態）にある。

[0036] 昇降ガイドレール25a上の台車16で走行体5のハンガー8から被搬送物Wを受け取らせたならば、図12Bに示すように、台車用フィーダー28におけるシリンダーユニット66のピストンロッドを進出させて前後一対の開閉挟持片56a，56bを閉動させることにより、被搬送物Wを支持している台車16の被把持部55を前後一対の開閉挟持片56a，56bで前後から挟持させる。係る状態で移動用駆動手段58のシリンダーユニット63により可動部材60を一定距離sだけ後方に移動させることにより、図4に示すように、当該台車16を昇降ガイドレール25a上で後方に一定距離sだけ移動させる。このとき、ハンガー係止手段20が台車16に設けられているので、図4及び図11Bに示すように、係止解除下位置に切り換えられているハンガー係止手段20の左右一対の係止具34a，34bもハンガー8に対して後方へ一定距離sだけ移動し、当該左右一対の係止具34a，34bがハンガー8の被係止部42a，42bの真下位置に位置することになる。而して、当該係止具34a，34bと一体に後方に移動するカム従動ローラー39a，39bは、昇降台25b側にあって後方には移動しないカムレール52a，52b内を移動することになるが、この移動によってカム従動ローラー39a，39bがカムレール52a，52b内からは離脱しないように、当該カムレール52a，52bの長さが設定されている。従って、係る状態で係止具位置切り換え手段35aのカムレール52a，52bをカムレ

ール駆動手段(シリンダーユニット)54により下降限レベルまで下降させ、カム従動ローラー39a, 39bを介して台車16側のシーソー運動体37a, 37bをスプリング40a, 40bの付勢方向に水平姿勢まで揺動復帰させることにより(図9A参照)、左右一対の係止具34a, 34bを係止解除下位置から係止作用上位置に切り換えて、図5及び図11Cに示すように、各係止具34a, 34bをハンガー8の被係止部42a, 42bに係止させる。即ち、各係止具34a, 34bの前後一対の係止部(ローラー)43a, 43b間にハンガー8の被係止部42a, 42bを嵌合させる。

[0037] 被搬送物受取手段14における上記の一連の動作により、図2に示すように、トロリーコンベヤ1のハンガー8で支持されて吊下搬送されていた被搬送物Wは、当該ハンガー8に対して持ち上げられると共に後方に一定距離sだけ移動せしめられた状態で台車16の被搬送物支持具19に支持され、被搬送物Wの支持から開放されたハンガー8は、ハンガー係止手段20を介して台車16に係止されることになる。従って、当該被搬送物Wの左右両側の作業部位(例えば自動車車体に対する前側左右両ドアーの取付部位)Waが、当該被搬送物Wがトロリーコンベヤ1のハンガー8で支持されて吊下搬送されていたときに当該ハンガー8の左右一対のハンガーアーム10a, 10bにおける縦杆部9aと横から見て重なる位置にあったとしても、この被搬送物Wがハンガー8から台車16上に移載された最終段階では、図5に示すように前記作業部位Waは、当該被搬送物Wの左右両側に位置するハンガー8の左右一対のハンガーアーム10a, 10bにおける縦杆部9aから横から見て後方に外れた位置に移動したことになる。換言すれば、このような結果となるように被搬送物受取手段14上での台車用フィーダー28による台車16の後方への移動距離sが設定されている。

[0038] 次に、台車用フィーダー28におけるシリンダーユニット66のピストンロッドを引き込み移動させて前後一対の開閉挟持片56a, 56bを開動させ、当該開閉挟持片56a, 56bを台車16側の被把持部55より下側レベルに逃がした後、直ちに、又はこの後の適当な時期に、移動用駆動手段58のシリンダーユニット63により可動部材60を一定距離sだけ前方に移動復帰させ、この台車用フィーダー28を元の待機状態に戻す。前記のように開閉挟持片56a, 56bを開動させて台車16側の被把持部55より下側レベルに逃がしたならば、図6に示すように、この被搬送物受取手段14における昇降

ガイドレール25a上の台車16を台車引き込み送り出し手段27により搬送経路12のガイドレール17上に送り出すと共に当該搬送経路12が備える摩擦駆動手段21により当該搬送経路12上で定速走行駆動することにより、被搬送物支持具19で支持する被搬送物Wを搬送経路12上で定速搬送すると共に、当該被搬送物Wの支持から開放された状態のハンガー8を備えたトロリーコンベヤ1の走行体5を、当該ハンガー8とハンガー係止手段20とを介して、台車16が走行する搬送経路12と平行な駆動解除区間Fのフリーライン2に沿って当該台車16により牽引移動させることができる。この状態において、例えば被搬送物Wの左右両側の作業部位Waに対する作業を、当該被搬送物Wと一体に移動するトロリーコンベヤ1の走行体5のハンガー8に邪魔されることなく、台車16上に搭乗した作業者によって遂行させることができる。

[0039] 上記の台車式搬送装置11における台車16での被搬送物Wの搬送過程において、ハンガー係止手段20により当該台車16に係止されて牽引されるトロリーコンベヤ1側の走行体5やハンガー8に何らかの障害が発生し、これら走行体5又はハンガー8の円滑な前進移動が妨げられるような事態が生じたときは、台車16側のハンガー係止手段20に過負荷が生じる。この過負荷は、ハンガー係止手段20における左右一対の係止具34a，34bを構成する後側係止部43bに後方向きに作用するので、結果として、後側係止部43bがスプリング47の付勢力に抗して後方に傾動し、この傾動をセンサー51が検知することになるので、当該センサー51の検知信号を利用して、当該台車16に非常停止をかけるなどの安全対策が自動的に講じられるように構成することができる。

[0040] トロリーコンベヤ1により吊下搬送される後続の各被搬送物Wも上記の一連の動作により被搬送物受取手段14において台車式搬送装置11の台車16上に移載すると共に、当該被搬送物Wを吊下搬送していたトロリーコンベヤ1の走行体5もハンガー8を介して台車16に係止し、吊下搬送していた被搬送物Wと一体に台車16により台車式搬送装置11の搬送経路12上に順次送り込み、各台車16が前後に突き合う状態で定速搬送させ、その間に各台車16上の被搬送物Wに対して所定の作業を遂行させることができる。

[0041] 台車式搬送装置11の搬送経路12の終端に達した台車16は、被搬送物戻し手段1

5の昇降ガイドレール29a上に移載させる。即ち、図7に示すように、被搬送物戻し手段15の昇降台29bを昇降駆動手段30により上昇限レベルHまで上昇させ、昇降ガイドレール28aを台車式搬送装置11の搬送経路12のガイドレール17に接続させておく。そして台車式搬送装置11の搬送経路12の終端の摩擦駆動手段21で昇降ガイドレール29a上に台車16が送り出されたならば、昇降台29b側の台車引き込み送り出し手段31により当該台車16を昇降ガイドレール29a上の定位置まで引き込み、停止させる。このとき、図1及び図7に示すように、当該台車16にハンガー係止手段20で係止されて牽引されてきたトロリーコンベヤ1の走行体5(ハンガー8)は、トロリーコンベヤ1における駆動解除区間Fの終端位置(駆動区間Dの始端位置)P4より一定距離だけ上手側の定停止位置P3で停止することになる。又、ハンガー8を係止しているハンガー係止手段20のカム従動ローラー39a, 39bは、昇降台29b側の係止具位置切り換え手段35bの下降限位置に下げられているカムレール52a, 52b内に進入し、昇降台29b側の台車用フィーダー32の前後一対の開閉挟持片56a, 56bは、後退限位置(シリンダーユニット63のピストンロッドが引き込まれた位置)にあって且つ開動した状態にあり、台車16側の被把持部55は、当該開動した状態にある前後一対の開閉挟持片56a, 56b間の真上で停止することになる。

[0042] 被搬送物Wを支持すると共に当該被搬送物Wから切り離されたハンガー8を介してトロリーコンベヤ1の走行体5を牽引移動させてきた台車16が被搬送物戻し手段15の台車引き込み送り出し手段31により昇降ガイドレール29a上の定位置まで引き込まれて停止したならば、次に、図7に示すように、昇降台29b側の係止具位置切り換え手段35bのカムレール52a, 52bをシリンダーユニット54により上昇限まで上昇させ、当該カムレール52a, 52bに進入しているカム従動ローラー39a, 39bを押し上げてシーソー運動体37a, 37bをスプリング40a, 40bの付勢力に抗して傾動させ、以て、左右一対の係止具34a, 34bを係止作用上位置から係止解除下位置に切り換え、ハンガー8における左右一対のハンガーアーム10a, 10bの被係止部42a, 42bから下方に離脱させる(図9B及び図11B参照)。このようにして台車16からハンガー8を切り離した状態で、次に昇降台29b側の台車用フィーダー32の前後一対の開閉挟持片56a, 56bを開閉用駆動手段57のシリンダーユニット66により閉動させ、真上位置

で停止している台車16の被把持部55を挟持させ、続いて当該台車用フィーダー32の移動用駆動手段58のシリンダーユニット63により当該開閉挟持片56a，56bを一定距離sだけ前進移動させる。この結果、支持している被搬送物Wと共に台車16が一定距離sだけ昇降ガイドレール29a上で前進移動し、当該台車16が支持している被搬送物Wが、定停止位置P3で停止したままのトロリーコンベヤ1の走行体5におけるハンガー8に対して一定距離sだけ前進移動することになる。

[0043] 上記の被搬送物戻し手段15での一連の動作により、被搬送物Wとハンガー8との前後方向の相対位置関係が、トロリーコンベヤ1における走行体5のハンガー8から台車式搬送装置11の台車16に移し替られる以前の状態、即ち、トロリーコンベヤ1で吊下搬送されているときのハンガー8と被搬送物Wとの前後方向相対位置関係に戻されたことになる。係る状態で、次に台車用フィーダー32の開閉挟持片56a，56bを開動させ、台車16の被把持部55に対する挟持を解除した後、この被搬送物戻し手段15の昇降駆動手段30により昇降台29b（昇降ガイドレール29a）を上昇限レベルHから下降限レベルLまで降下させると、これに伴って下降する台車16の被搬送物支持具19で支持されていた被搬送物Wが下降途中でハンガー8の左右一対のハンガーアーム10a，10bにおける被搬送物支持部9cに乗り移り、当該ハンガー8で支持される状態に戻される。一方、昇降ガイドレール29a上の空になった台車16は、昇降台29bが下降限レベルLに達して台車式搬送装置11の台車戻り経路13のガイドレール17と接続する状態になった昇降ガイドレール29a上から、当該昇降台29b側の台車引き込み送り出し手段31と台車戻り経路13側の摩擦駆動手段21とにより台車戻り経路13内に送り出されると共に当該台車戻り経路13上で被搬送物受取手段14に向けて搬送される。

[0044] 台車16の下降により当該台車16から切り離されてハンガー8上に戻された被搬送物Wは、当該ハンガー8を備えた走行体5、即ち、定停止位置P3で停止しているトロリーコンベヤ1の走行体5を、トロリーコンベヤ1における駆動解除区間Fの終端位置（駆動区間Dの始端位置）P4までフリーライン2に沿って併設された適当な補助フィーダーにより移動させることにより、トロリーコンベヤ1のパワーライン3を移動するプッシャーにより駆動解除区間Fの下手側の駆動区間Dにおいて再び推進させ、被搬送物

Wを吊下搬送することができる。このときの被搬送物Wとハンガー8との間の前後方向相対位置関係は、駆動解除区間Fの入り口で台車式搬送装置11の台車16に移し替られる以前の状態と同一であることは明らかである。尚、定停止位置P3を駆動解除区間Fの下手側の駆動区間Dに入った位置に設定し、当該定停止位置P3で停止した走行体5の被動ドッグ6を適当な操作手段で下げておくなどして、当該定停止位置P3で停止した走行体5の被動ドッグ6には駆動区間Dにおけるパワーライン3のプッシャーが作用しないように構成し、ハンガー8への被搬送物Wの戻し作用が完了した時点で下げられていた被動ドッグ6を復帰させるなどして、当該定停止位置P3から直ちにトロリーコンベヤ1のパワーライン3を移動するプッシャーにより走行体5を推進させるようにして、定停止置P3から走行体5を所定位置まで移動させる補助フィーダーを無くすこともできる。

[0045] 本発明は以上の実施形態のように実施できるものであるが、台車式搬送装置11の台車16上での被搬送物Wに対する作業部位Waが、当該被搬送物Wを吊下搬送してきたトロリーコンベヤ1の走行体5におけるハンガー8から離れた位置であって、当該作業部位Waに対する作業に前記ハンガー8が邪魔にならない位置であるときは、台車16上に移載された被搬送物Wと当該被搬送物Wを支持していたハンガー8とを前後方向に相対移動させる手段及び行程は省くことができる。

産業上の利用可能性

[0046] 本発明に係る搬送設備は、例えば自動車のボディーにドアーなどの各種部品を取り付ける自動車組み立てラインにおける自動車ボディーの搬送設備として利用できる。

請求の範囲

[1] 被搬送物吊下式搬送装置と、台車式搬送装置と、被搬送物受取手段と、被搬送物戻し手段とを備えた搬送設備であって、

前記被搬送物吊下式搬送装置は、被搬送物支持用ハンガーが設けられた走行体を備えると共に、この走行体の走行経路中には、当該走行体を強制走行させる駆動区間と、当該走行体を移動自由な状態とする駆動解除区間とが設けられ、

前記台車式搬送装置は、前記走行体の走行経路の駆動解除区間の下側で当該走行経路に沿って走行可能な台車を備えると共に、当該台車上には被搬送物支持具が設けられ、

前記被搬送物受取手段は、前記台車式搬送装置の搬送開始端において前記被搬送物支持具を前記走行体のハンガーに対して相対的に上げて当該ハンガーから被搬送物を前記被搬送物支持具に移載する手段であり、

前記被搬送物戻し手段は、前記台車式搬送装置の搬送終了端において前記被搬送物支持具を前記走行体のハンガーに対して相対的に下げて当該被搬送物支持具からハンガーに被搬送物を移載する手段である搬送設備において、

前記被搬送物吊下式搬送装置の走行体の被搬送物支持用ハンガーには、被係止部が設けられ、

前記台車式搬送装置の台車には、前記ハンガーの被係止部に対し係脱自在なハンガー係止手段が設けられ、

前記台車式搬送装置の搬送経路では、前記ハンガー係止手段が前記ハンガーの被係止部と係合し、駆動解除状態に切り換えられている前記被搬送物吊下式搬送装置の走行体を前記台車が前記ハンガーを介して牽引移動させるように構成されている搬送設備。

[2] 前記被搬送物吊下式搬送装置は、その走行体の走行経路に沿って移動するプッシャーで当該走行体を推進させるトロリーコンベヤにより構成され、

前記走行体の駆動解除区間では、前記プッシャーが走行体から切り離されて駆動解除状態に切り換えられるように構成された、請求項1に記載の搬送設備。

[3] 前記被搬送物受取手段及び被搬送物戻し手段は、前記台車式搬送装置の台車

自体を昇降させる昇降台によって構成されている、請求項1に記載の搬送設備。

[4] 前記ハンガー係止手段は、前記台車式搬送装置の搬送開始端においてハンガーから被搬送物を受け取った被搬送物支持具と当該ハンガーとが相対的に一定距離前後方向に移動したときにハンガー側の被係止部に対応する位置に設けられ、

前記台車式搬送装置の搬送終了端においては、被搬送物を支持する被搬送物支持具とハンガーとを元の前後方向相対位置に戻した後、前記被搬送物戻し手段を動作させるように構成された、請求項1に記載の搬送設備。

[5] 前記台車式搬送装置の搬送開始端及び搬送終了端における被搬送物支持具とハンガーとの相対的前後方向移動が、前記台車自体の前後方向移動により行われるように構成された、請求項4に記載の搬送設備。

[6] 前記台車式搬送装置は、自走できない台車を搬送経路側に配設された台車駆動手段により推進させる構成のものであり、

前記被搬送物受取手段には、台車を搬送経路側へ送り出す台車送り出し手段と、支持する台車を、前記ハンガー係止手段がハンガーの被係止部に対応する位置まで前後方向に移動させる台車用フィーダーとが設けられ、

前記被搬送物戻し手段には、搬送経路から送り込まれる台車を所定位置まで引き込む台車引き込み手段と、支持する被搬送物とハンガーとが元の前後方向相対位置に戻るように台車を前後方向に復帰移動させる台車用フィーダーとが設けられている、請求項5に記載の搬送設備。

[7] 前記被搬送物受取手段と前記被搬送物戻し手段の台車用フィーダーは、台車に設けられた被把持部を前後から挟持する前後一対の開閉挟持片と、この開閉挟持片の開閉用駆動手段と、前記開閉挟持片を前後方向に往復移動させる移動用駆動手段とから構成されている、請求項6に記載の搬送設備。

[8] 前記ハンガーは左右一対のハンガーアームを備え、

前記ハンガー係止手段は、左右各ハンガーアームに設けられた被係止部に対し係脱自在な左右一対の係止具と、この左右一対の係止具を連動させて係脱動作させる1つの係止具位置切り換え手段とから構成されている、請求項1に記載の搬送設備。

[9] 前記左右一対の係止具は、ハンガー側の被係止部に係合する上位置にスプリング

により付勢保持され、

前記台車には、各係止具それぞれに連動して昇降するカム従動ローラーが設けられ、

前記係止具位置切り換え手段は、前記被搬送物受取手段及び被搬送物戻し手段の位置に台車があるときに当該台車側の前記カム従動ローラーと係合するように前記被搬送物受取手段及び被搬送物戻し手段にそれぞれ併設されたカムレールと、これらカムレールを昇降させるカムレール駆動手段とから構成されている、請求項8に記載の搬送設備。

[10] 前記左右一対の係止具は、左右横向きに配置され且つ中間に支点を有する左右一対のシーソー運動体の外端にそれぞれ設けられ、両シーソー運動体の内端に昇降体が連動連結されると共に当該昇降体の下端に前記カム従動ローラーが軸支されている、請求項9に記載の搬送設備。

[11] 前記ハンガー係止手段は、前記ハンガーに設けられた被係止部に対し上下方向に嵌合離脱自在な係止具と、この係止具を昇降移動させる係止具位置切り換え手段と、センサーとから成り、

前記係止具は、前記被係止部を挟む前後一対の係止部を備え、この前後一対の係止部の内、被係止部を後押しする後側係止部は、一定範囲内前後移動自在に構成されると共にスプリングにより前側定位置に付勢保持され、

前記センサーは、前記後側係止部が前記スプリングに抗して後方に移動したことを検知する、請求項1に記載の搬送設備。

[図1]

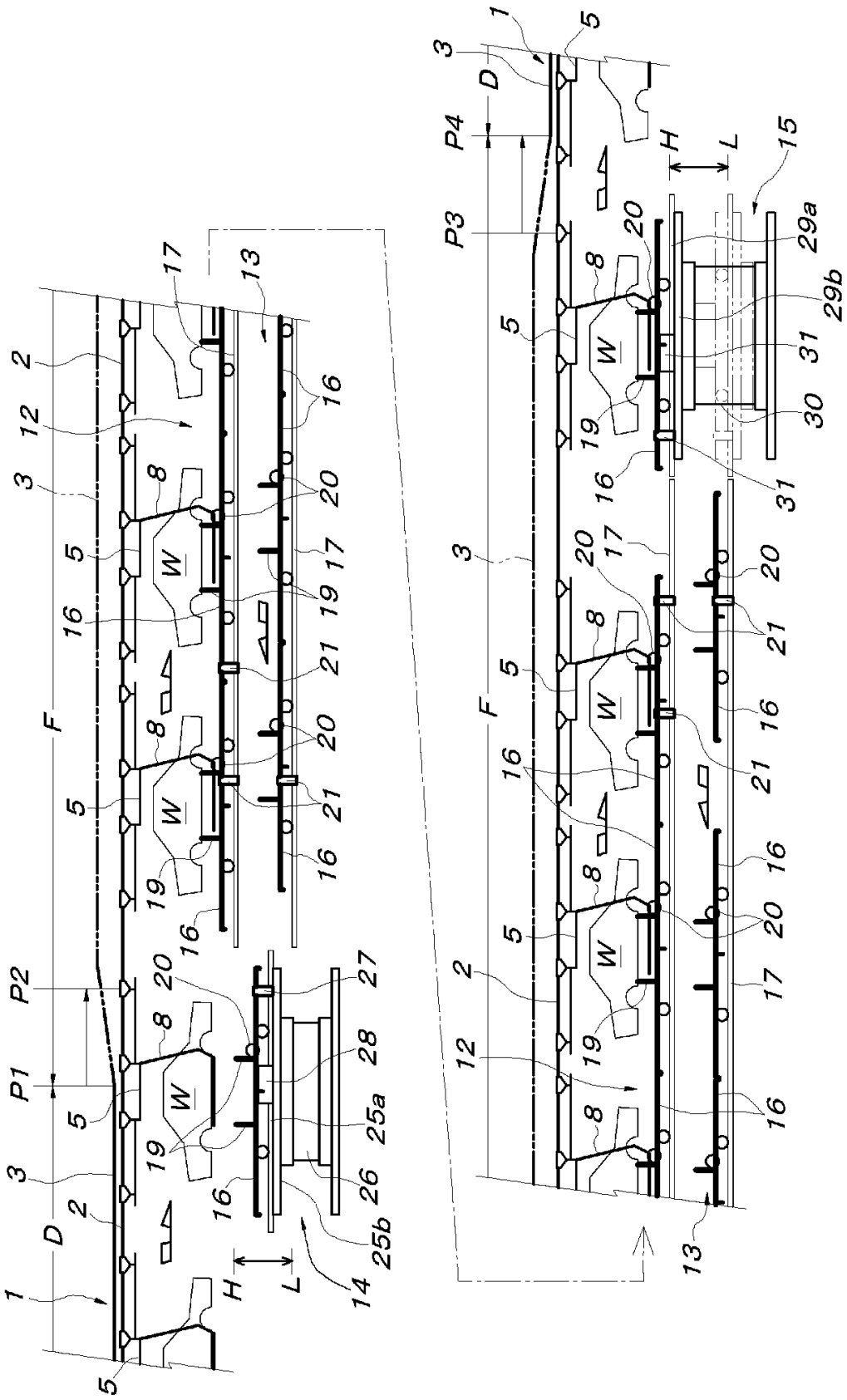
1
2
3
5
8
12
13
14
15
16
17
19
20
21
25a
25b
26
27
28
29a
29b
30
31
W
D
F
H
L
P1
P2
P3
P4

[図2]

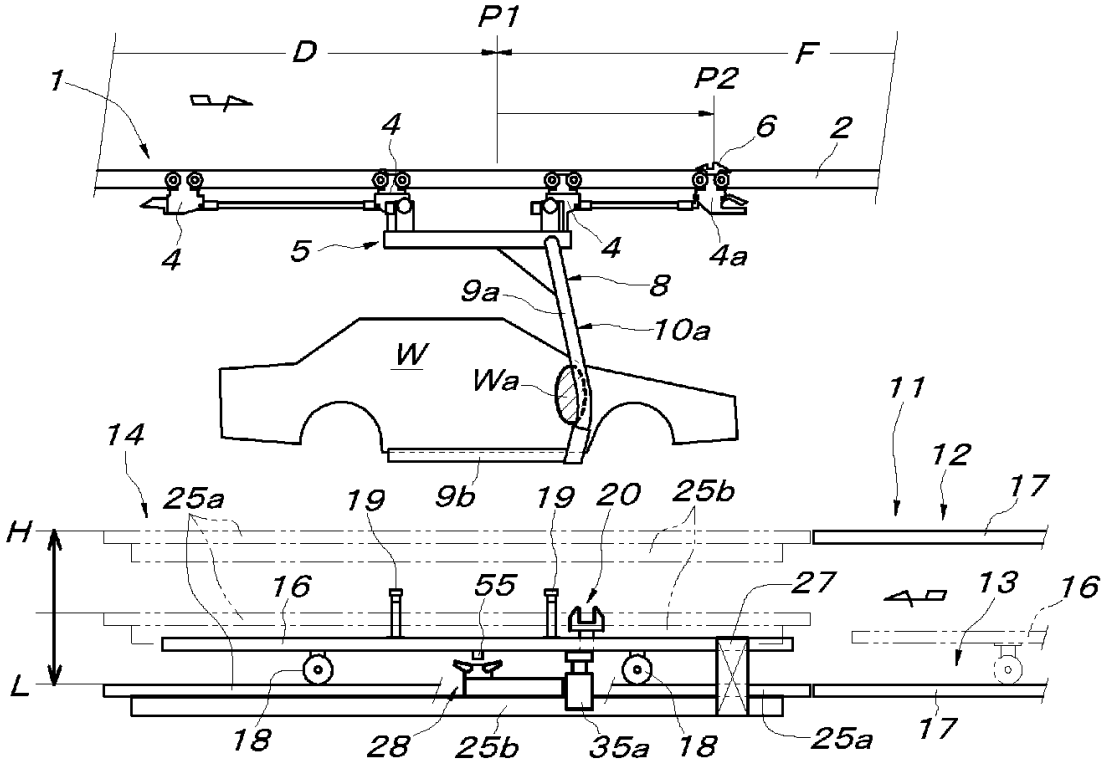
P1
D
F
1
P2
4
6
2
4
5
4
4a
9a
8
10a
W
Wa
11
14
12
25a
19
9b
19
20
25b
17
H
16
55
27
13
16
L
18
28
25b
35a
18
25a
17

[図3]

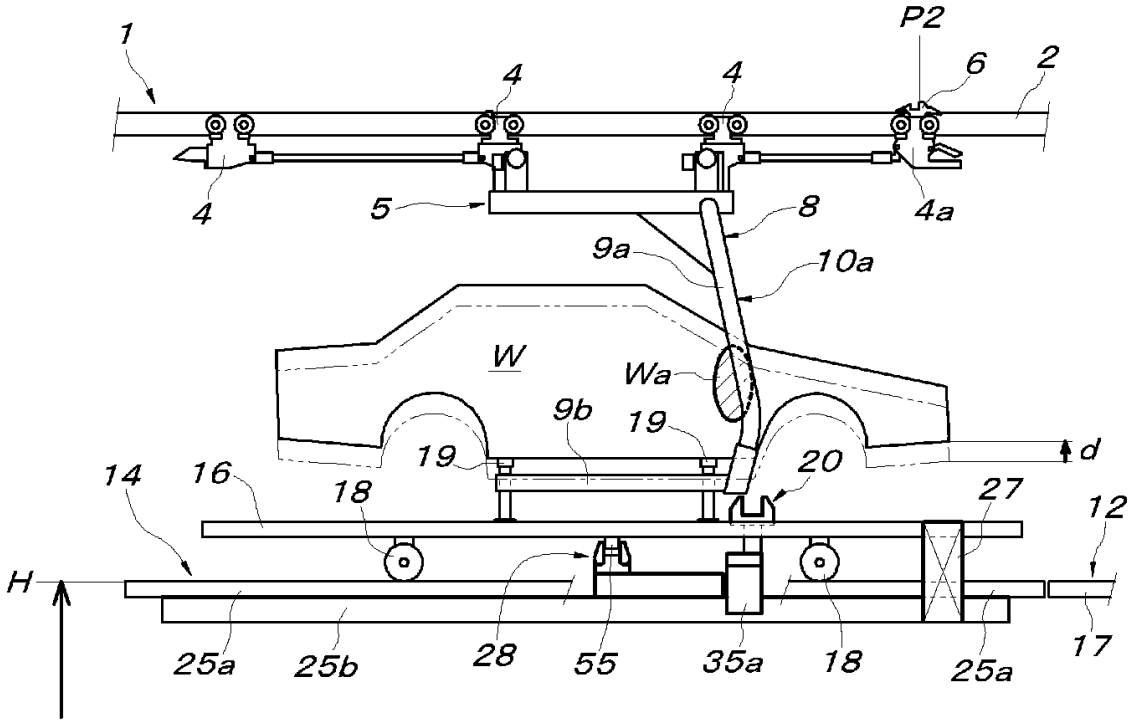
1
P2
4
4
6
2
4
5
8
4a
9a
10a
W
Wa
9b
19
19
d
14
16
18
20
27
12
H
25a
25b
28
55
35a
18
25a
17

[図4]

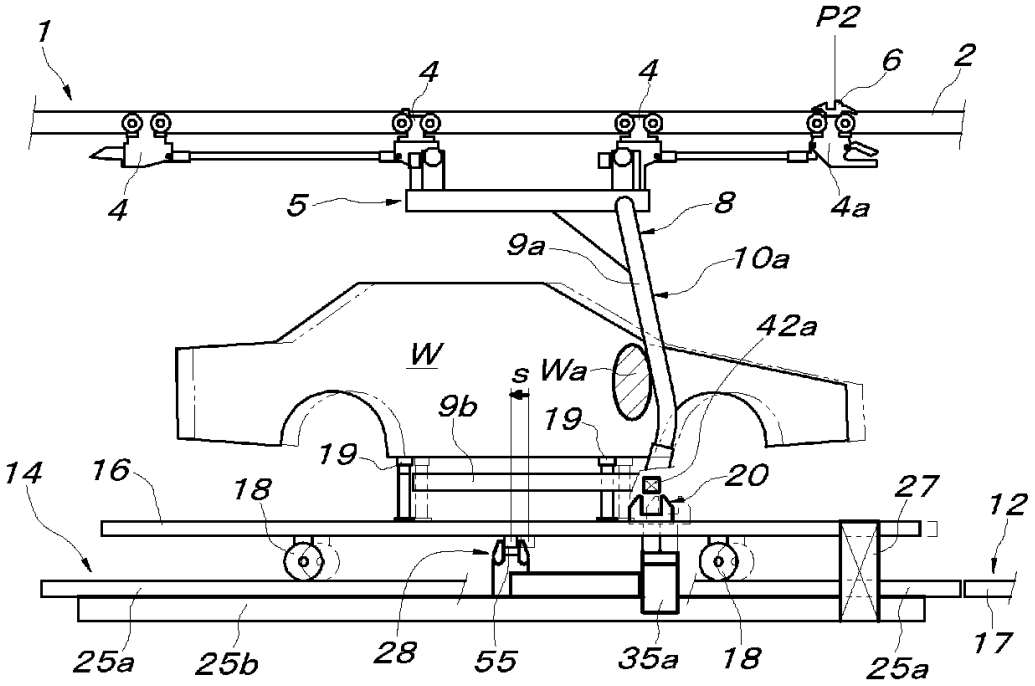
1
P2
6
2
4
4
4
5
8
4a
9a
10a
42a
W
s
Wa
9b
19
19
20
14
16
18
27
12
25a
25b
28
55
35a
18
25a
17

[図5]

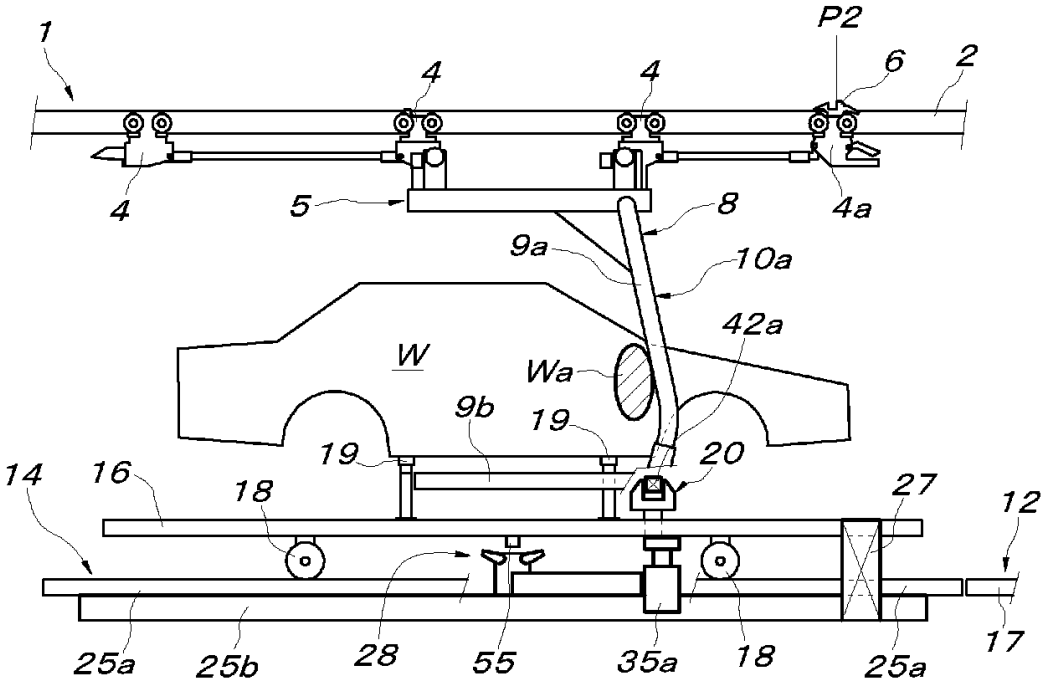
1
P2
6
2
4
4
4
5
8
4a
9a
10a
42a
W
Wa
9b
19
19
20
14
16
18
27
12
25a
25b
28
55
35a
18
25a
17

[図6]

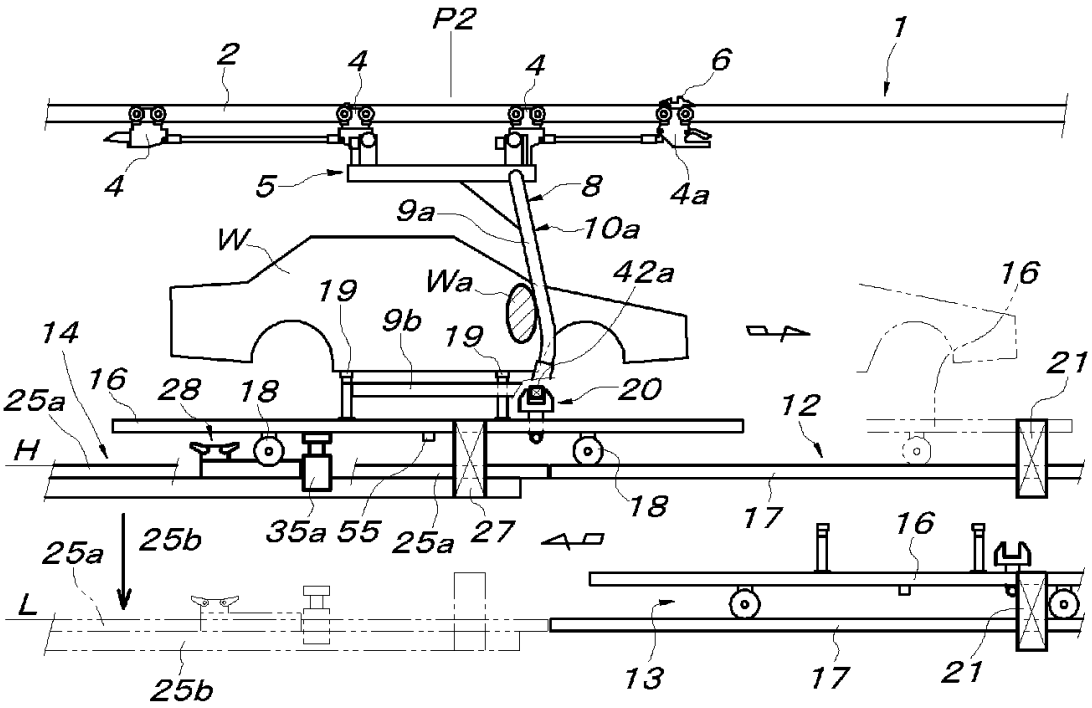
P2
1
2
4
4
6
4
5
8
4a
9a
10a
W
Wa
42a
16
19
9b
19
14
16
28
18
20
21
25a
12
H
18
35a
55
25a
27
17
16
25a
25b
L
13
17
21
25b

[図7]

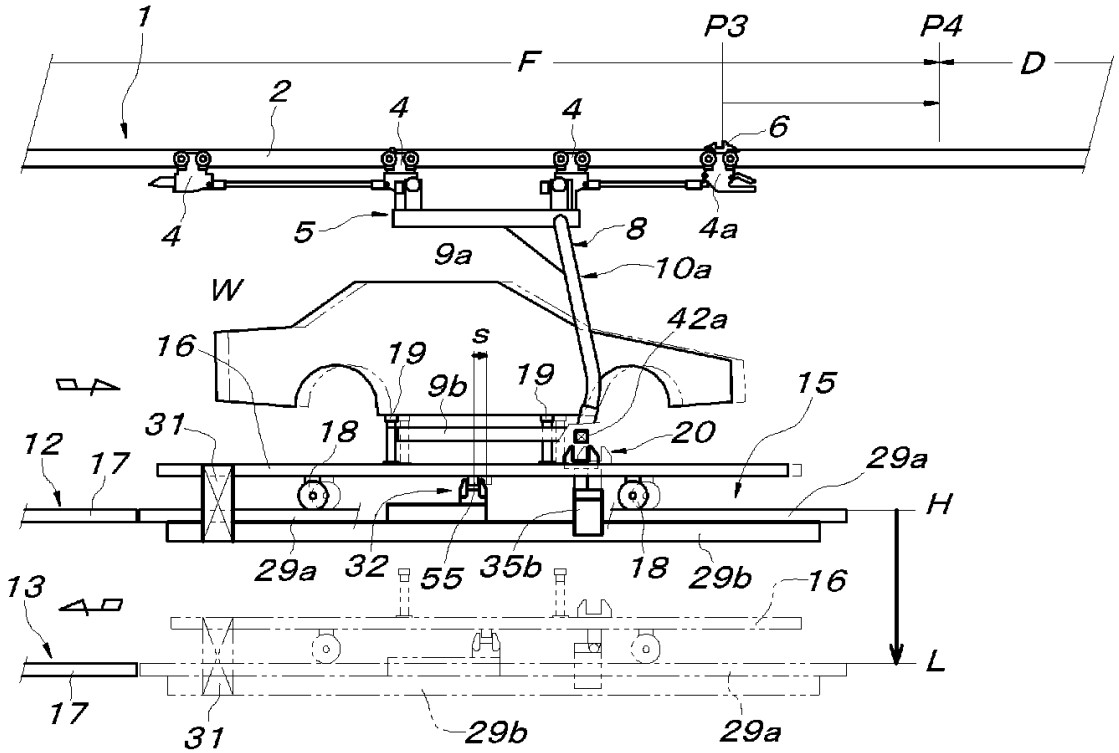
1
P3
P4
F
D
2
4
4
6
4
5
8
4a
9a
10a
W
42a
16
19
s
9b
19
15
31
18
20
12
17
29a
H
29a
32
55
35b
18
29b
16
13
L
17
31
29b
29a

[図8]

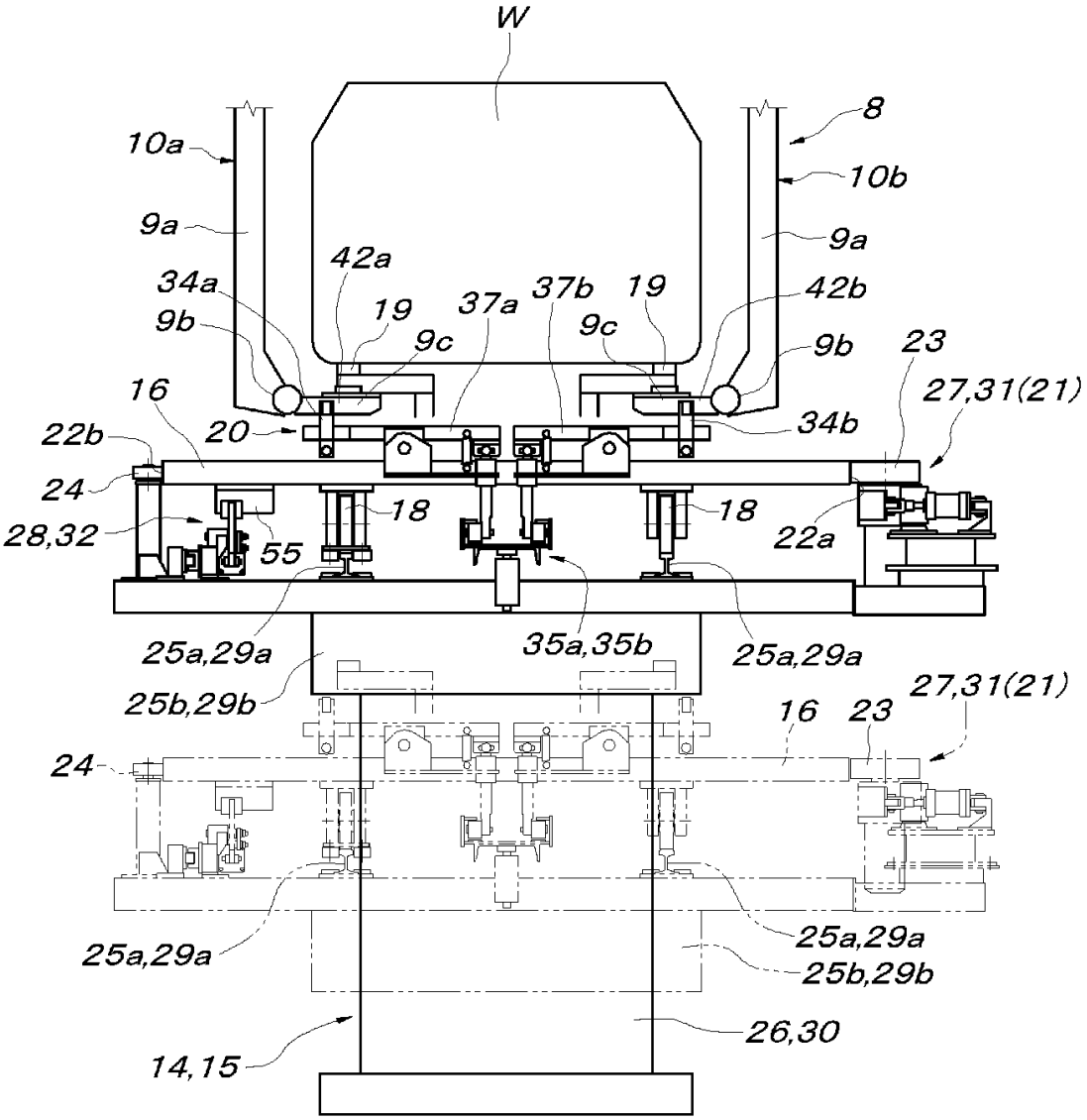
W
8
10a
10b
9a
9a
42a
34a
19
37a
37b
19
42b
9b
9c
9c
9b
23
16
27,31(21)
22b
20
34b
24
18
18
28,32
55
22a
25a,29a
35a,35b
25a,29a
25b,29b
27,31(21)
16
23
24
25a,29a
25a,29a
25b,29b
26,30
14,15

[図9]

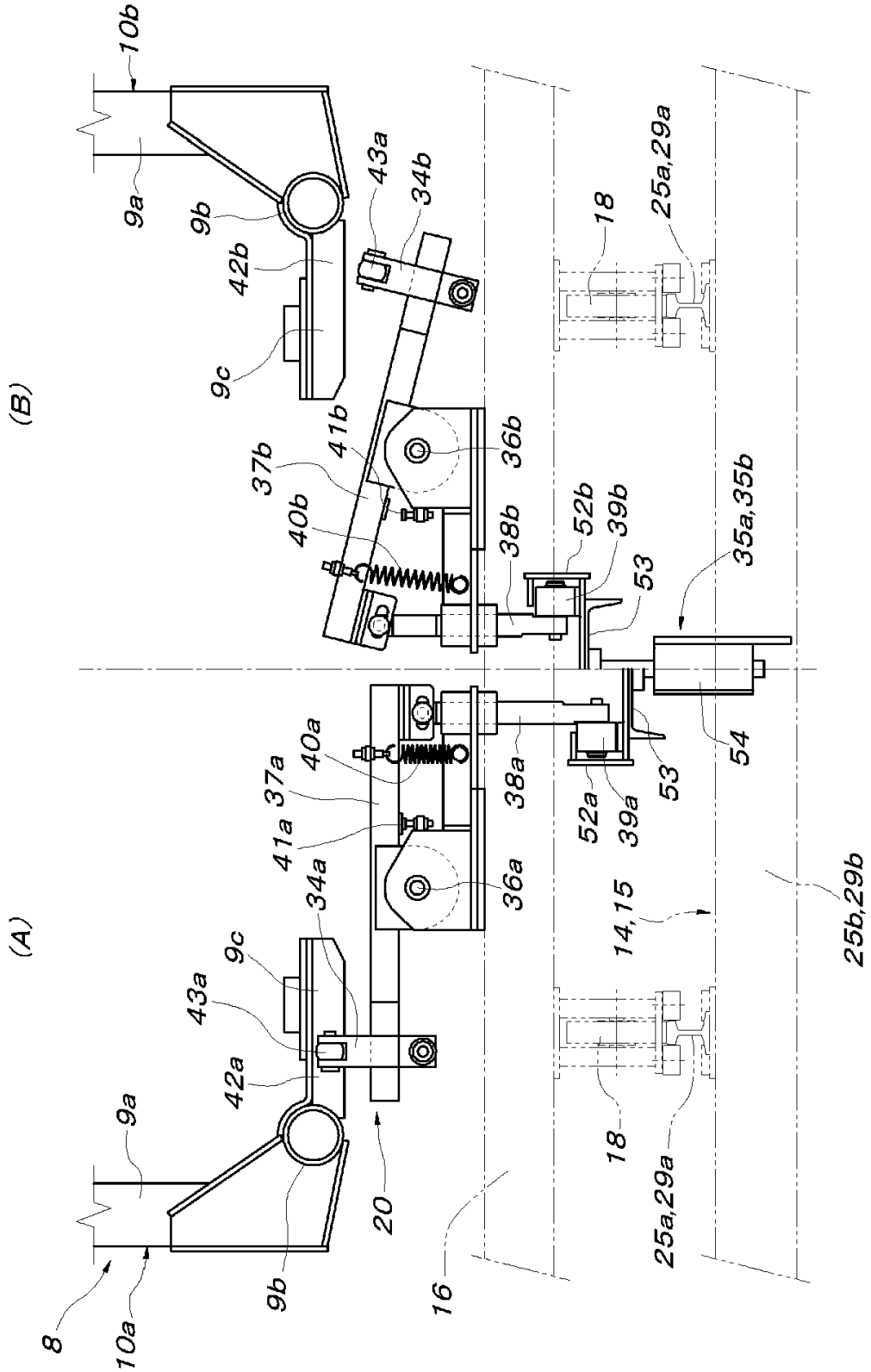
(A)
(B)
8
10a
9a
9b
9c
42a
43a
34a
20
16
37a
41a
40a
36a
38a
52a
39a
53
54
14,15
18
25a,29a
25b,29b
10b
42b
43a
34b
37b
41b
40b
36b
38b
52b
39b
35a,35b

[図10]

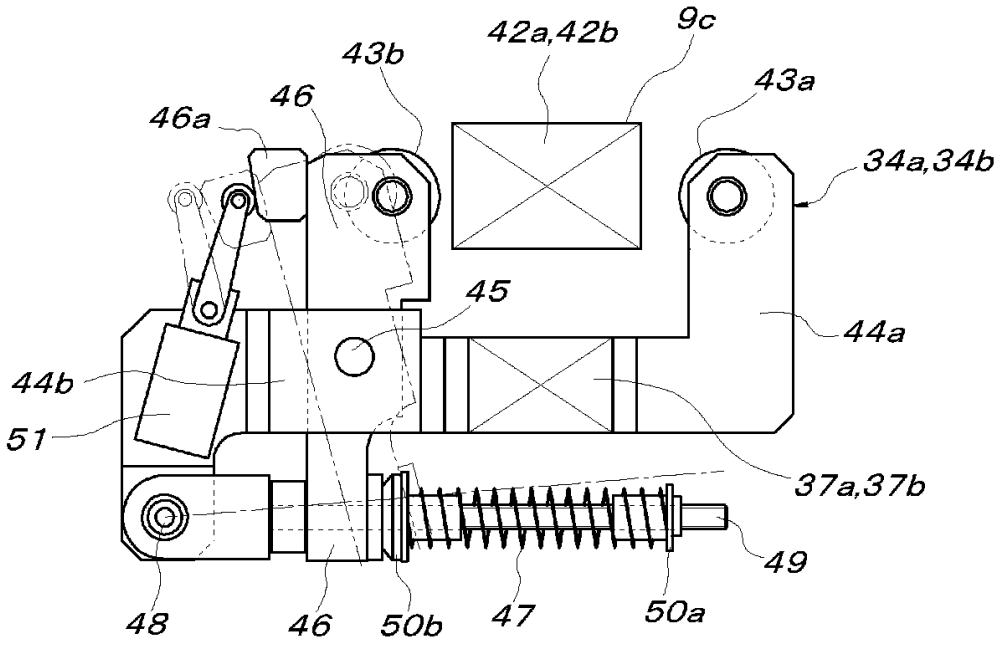
42a,42b
9c
43b
43a
46
46a
34a,34b
45
44a
44b
51
37a,37b
49
48
46
50b
47
50a

[図11]

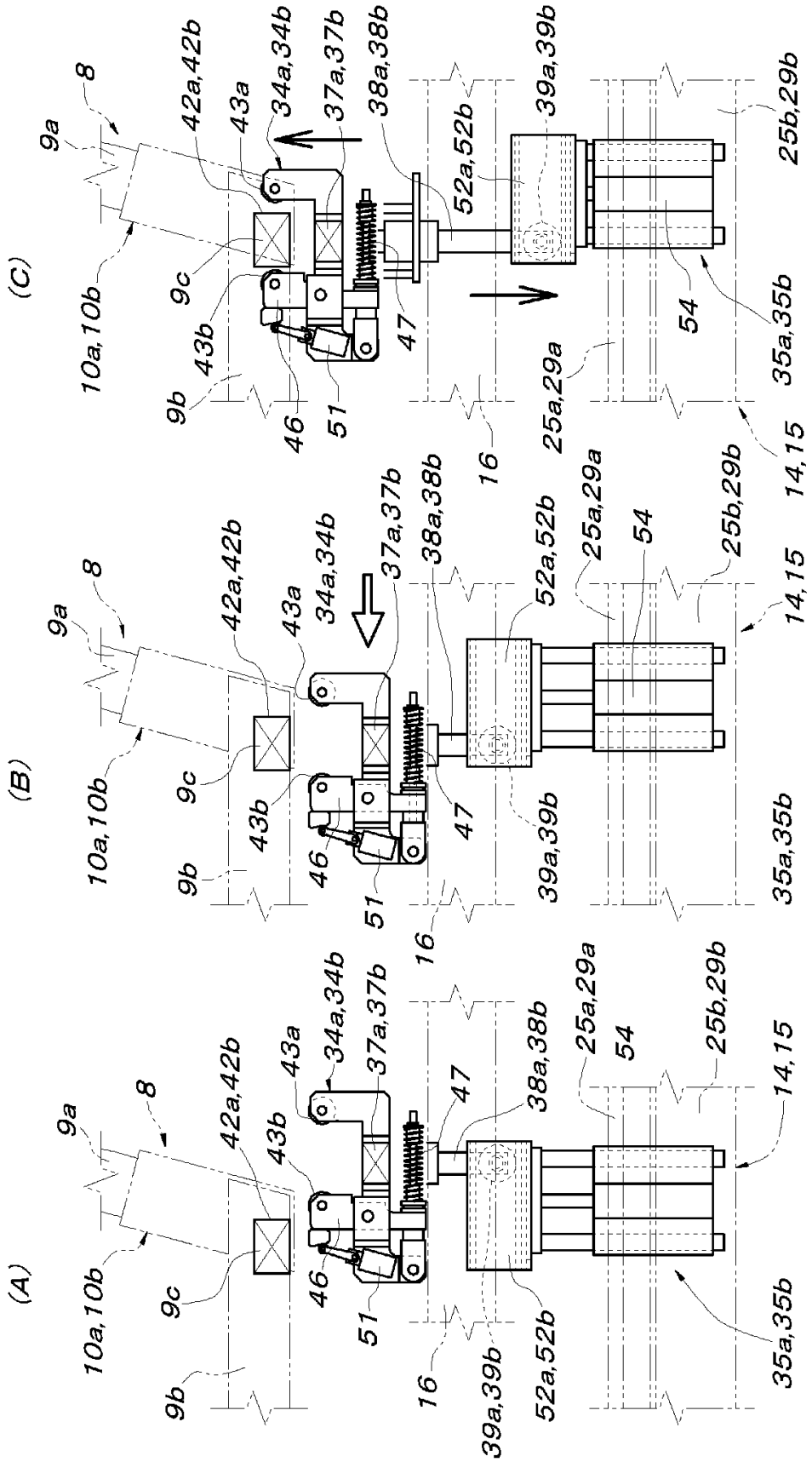
(A)
(B)
(C)
8
9a
9b
9c
10a,10b
14,15
16
25a,29a
25b,29b
34a,34b
35a,35b
37a,37b
38a,38b
39a,39b
42a,42b
43a
43b
46
47
51
52a,52b
54

[図12]

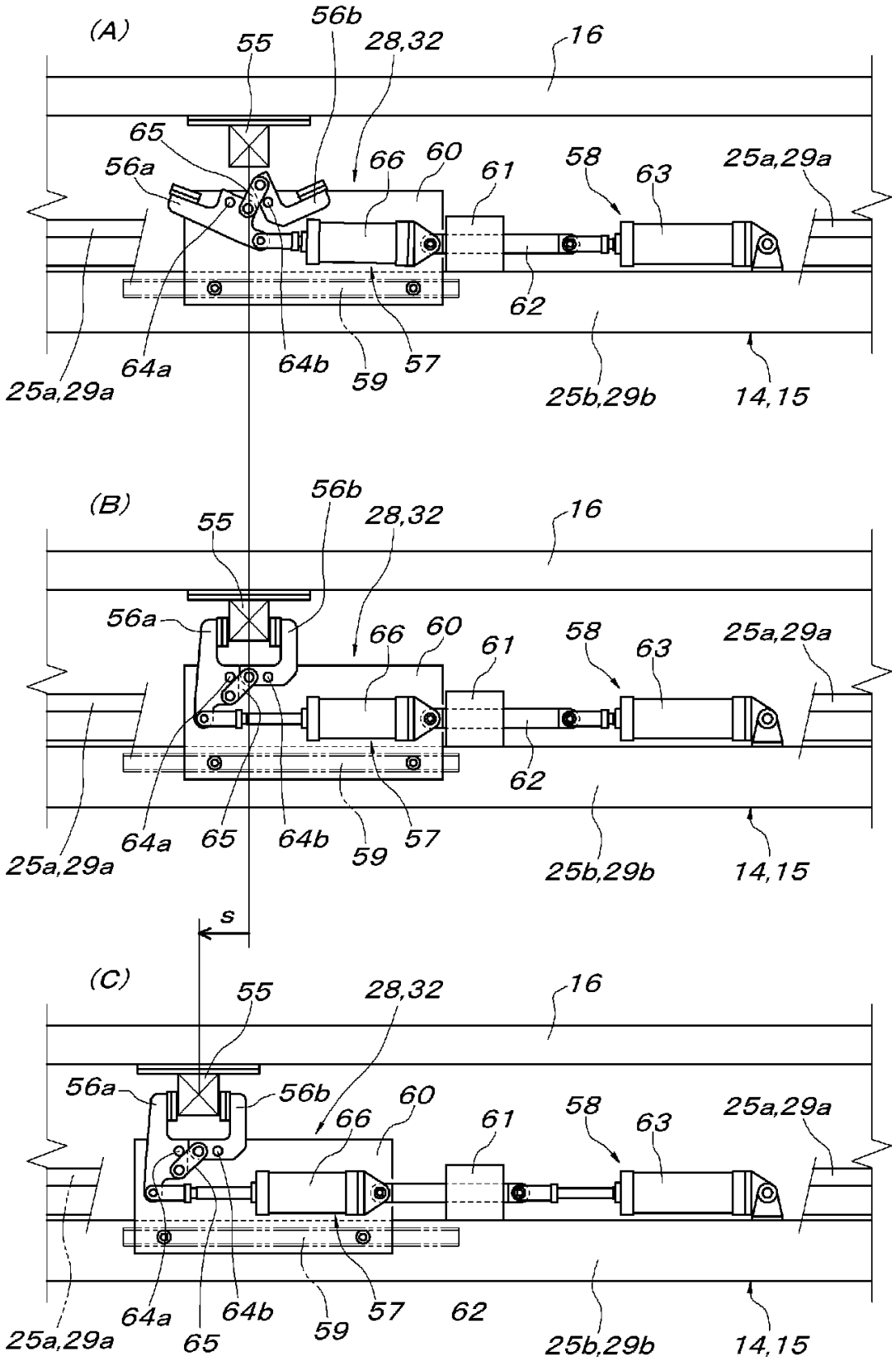
(A)
55
56b
28,32
16
65
56a
66
60
61
58
63
25a,29a
62
64a
64b
59
57
25a,29a
25b,29b
14,15
(B)
55
56b
28,32
16
56a
66
60
61
58
63
25a,29a
62
64a
65
64b
59
57
25a,29a
25b,29b
14,15
s
(C)
55
28,32
16
56a
56b
66
60
61
58
63
25a,29a
64a
64b
59
57
62
25a,29a
65
25b,29b
14,15

INTERNATIONAL SEARCH REPORT

International application No.
PCT/JP2006/314390

A. CLASSIFICATION OF SUBJECT MATTER
B61B10/02(2006.01)i, *B61B13/12*(2006.01)i, *B61J1/10*(2006.01)i, *B65G17/20*(2006.01)i

According to International Patent Classification (IPC) or to both national classification and IPC

B. FIELDS SEARCHED

Minimum documentation searched (classification system followed by classification symbols)
B61B10/00-04, B61B13/12, B61J1/10, B65G17/20, B65G35/00-08, B65G37/00

Documentation searched other than minimum documentation to the extent that such documents are included in the fields searched

Jitsuyo Shinan Koho	1922-1996	Jitsuyo Shinan Toroku Koho	1996-2006
Kokai Jitsuyo Shinan Koho	1971-2006	Toroku Jitsuyo Shinan Koho	1994-2006

Electronic data base consulted during the international search (name of data base and, where practicable, search terms used)

C. DOCUMENTS CONSIDERED TO BE RELEVANT

Category*	Citation of document, with indication, where appropriate, of the relevant passages	Relevant to claim No.
A	JP 6-115426 A (Daifuku Co., Ltd.), 26 April, 1994 (26.04.94), Par. Nos. [0026] to [0041]; Figs. 1 to 7 (Family: none)	1-11
A	JP 8-282836 A (Daifuku Co., Ltd.), 29 October, 1996 (29.10.96), Full text; all drawings (Family: none)	1-11
A	JP 2002-87346 A (Honda Motor Co., Ltd.), 27 March, 2002 (27.03.02), Full text; Figs. 1 to 3, 5 to 7 & US 6695126 B2 & GB 2373766 A & WO 2002/022433 A1 & CA 2390936 A1 & CN 1206125 C	1-11

☒ Further documents are listed in the continuation of Box C. ☐ See patent family annex.

* Special categories of cited documents:
"A" document defining the general state of the art which is not considered to be of particular relevance
"E" earlier application or patent but published on or after the international filing date
"L" document which may throw doubts on priority claim(s) or which is cited to establish the publication date of another citation or other special reason (as specified)
"O" document referring to an oral disclosure, use, exhibition or other means
"P" document published prior to the international filing date but later than the priority date claimed
"T" later document published after the international filing date or priority date and not in conflict with the application but cited to understand the principle or theory underlying the invention
"X" document of particular relevance; the claimed invention cannot be considered novel or cannot be considered to involve an inventive step when the document is taken alone
"Y" document of particular relevance; the claimed invention cannot be considered to involve an inventive step when the document is combined with one or more other such documents, such combination being obvious to a person skilled in the art
"&" document member of the same patent family

Date of the actual completion of the international search 17 October, 2006 (17.10.06)	Date of mailing of the international search report 31 October, 2006 (31.10.06)
Name and mailing address of the ISA/ Japanese Patent Office Facsimile No.	Authorized officer Telephone No.

INTERNATIONAL SEARCH REPORT

International application No.
PCT/JP2006/314390

C (Continuation). DOCUMENTS CONSIDERED TO BE RELEVANT

Category*	Citation of document, with indication, where appropriate, of the relevant passages	Relevant to claim No.
A	JP 2002-19946 A (Honda Motor Co., Ltd.), 23 January, 2002 (23.01.02), Full text; Figs. 1 to 4, 8, 9 (Family: none)	1-11

国際調査報告

国際出願番号　ＰＣＴ／ＪＰ２００６／３１４３９０

Ａ．　発明の属する分野の分類（国際特許分類（ＩＰＣ））

Int.Cl.　B61B10/02(2006.01)i, B61B13/12(2006.01)i, B61J1/10(2006.01)i, B65G17/20(2006.01)i

Ｂ．　調査を行った分野

調査を行った最小限資料（国際特許分類（ＩＰＣ））

Int.Cl.　B61B10/00-04, B61B13/12, B61J1/10, B65G17/20, B65G35/00-08, B65G37/00

最小限資料以外の資料で調査を行った分野に含まれるもの

日本国実用新案公報	１９２２－１９９６年
日本国公開実用新案公報	１９７１－２００６年
日本国実用新案登録公報	１９９６－２００６年
日本国登録実用新案公報	１９９４－２００６年

国際調査で使用した電子データベース（データベースの名称、調査に使用した用語）

Ｃ．　関連すると認められる文献

引用文献のカテゴリー＊	引用文献名　及び一部の箇所が関連するときは、その関連する箇所の表示	関連する請求の範囲の番号
A	JP 6-115426 A（株式会社ダイフク）１９９４．０４．２６，段落【００２６】－【００４１】，図１－７　（ファミリーなし）	１－１１
A	JP 8-282836 A（株式会社ダイフク）１９９６．１０．２９，全文，全図　（ファミリーなし）	１－１１
A	JP 2002-87346 A（本田技研工業株式会社）２００２．０３．２７，全文，図１－３，５－７ & US 6695126 B2 & GB 2373766 A & WO 2002/022433 A1 & CA 2390936 A1 & CN 1206125 C	１－１１

☑　Ｃ欄の続きにも文献が列挙されている。　☐　パテントファミリーに関する別紙を参照。

＊　引用文献のカテゴリー
「Ａ」特に関連のある文献ではなく、一般的技術水準を示すもの
「Ｅ」国際出願日前の出願または特許であるが、国際出願日以後に公表されたもの
「Ｌ」優先権主張に疑義を提起する文献又は他の文献の発行日若しくは他の特別な理由を確立するために引用する文献（理由を付す）
「Ｏ」口頭による開示、使用、展示等に言及する文献
「Ｐ」国際出願日前で、かつ優先権の主張の基礎となる出願の日の後に公表された文献
「Ｔ」国際出願日又は優先日後に公表された文献であって出願と矛盾するものではなく、発明の原理又は理論の理解のために引用するもの
「Ｘ」特に関連のある文献であって、当該文献のみで発明の新規性又は進歩性がないと考えられるもの
「Ｙ」特に関連のある文献であって、当該文献と他の１以上の文献との、当業者にとって自明である組合せによって進歩性がないと考えられるもの
「&」同一パテントファミリー文献

国際調査を完了した日	国際調査報告の発送日
１７．１０．２００６	３１．１０．２００６

国際調査機関の名称及びあて先	特許庁審査官（権限のある職員）	３Ｄ	３４２０
日本国特許庁（ＩＳＡ／ＪＰ） 郵便番号１００－８９１５ 東京都千代田区霞が関三丁目４番３号	落合　弘之 電話番号　０３－３５８１－１１０１　内線　３３４１		

Ｃ（続き）．　関連すると認められる文献

引用文献のカテゴリー＊	引用文献名　及び一部の箇所が関連するときは、その関連する箇所の表示	関連する請求の範囲の番号
A	JP 2002-19946 A（本田技研工業株式会社）２００２．０１．２３，全文，図１－４，８，９　（ファミリーなし）	１－１１

(12) 特許協力条約に基づいて公開された国際出願

(19) 世界知的所有権機関
国際事務局

(43) 国際公開日
2007年2月1日 (01.02.2007)

PCT

(10) 国際公開番号
WO 2007/013348 A1

(51) 国際特許分類:
B61B 10/02 (2006.01) *B61J 1/10* (2006.01)
B61B 13/12 (2006.01) *B65G 17/20* (2006.01)

(21) 国際出願番号: PCT/JP2006/314390

(22) 国際出願日: 2006年7月20日 (20.07.2006)

(25) 国際出願の言語: 日本語

(26) 国際公開の言語: 日本語

(30) 優先権データ:
特願2005-213748 2005年7月25日 (25.07.2005) JP

(71) 出願人 (米国を除く全ての指定国について): 株式会社ダイフク (DAIFUKU CO., LTD.) [JP/JP]; 〒5500012 大阪府大阪市西淀川区御幣島３丁目２番１１号 Osaka (JP).

(72) 発明者; および
(75) 発明者/出願人 (米国についてのみ): 中村 次郎 (NAKAMURA, Jiro) [JP/JP]; 〒5500012 大阪府大阪市西淀川区御幣島３丁目２番１１号 株式会社エイ・ピー・エス内 Osaka (JP).

(74) 代理人: 藤川 忠司 (FUJIKAWA, Tadashi); 〒6600807 兵庫県尼崎市長洲西通１丁目１番２２号 Hyogo (JP).

(81) 指定国 (表示のない限り、全ての種類の国内保護が可能): AE, AG, AL, AM, AT, AU, AZ, BA, BB, BG, BR, BW, BY, BZ, CA, CH, CN, CO, CR, CU, CZ, DE, DK, DM, DZ, EC, EE, EG, ES, FI, GB, GD, GE, GH, GM, HN, HR, HU, ID, IL, IN, IS, KE, KG, KM, KN, KP, KR, KZ, LA, LC, LK, LR, LS, LT, LU, LV, LY, MA, MD, MG, MK, MN, MW, MX, MZ, NA, NG, NI, NO, NZ, OM, PG, PH, PL, PT, RO, RS, RU, SC, SD, SE, SG, SK, SL, SM, SY, TJ, TM, TN, TR, TT, TZ, UA, UG, US, UZ, VC, VN, ZA, ZM, ZW.

(84) 指定国 (表示のない限り、全ての種類の広域保護が可能): ARIPO (BW, GH, GM, KE, LS, MW, MZ, NA, SD, SL, SZ, TZ, UG, ZM, ZW), ユーラシア (AM, AZ, BY, KG, KZ, MD, RU, TJ, TM), ヨーロッパ (AT, BE, BG, CH, CY, CZ, DE, DK, EE, ES, FI, FR, GB, GR, HU, IE, IS, IT, LT, LU, LV, MC, NL, PL, PT, RO, SE, SI, SK, TR), OAPI (BF, BJ, CF, CG, CI, CM, GA, GN, GQ, GW, ML, MR, NE, SN, TD, TG).

[続葉有]

(54) Title: DELIVERY FACILITY FOR TRAVELING BODY FOR TRANSPORTATION

(54) 発明の名称: 搬送用走行体の配送設備

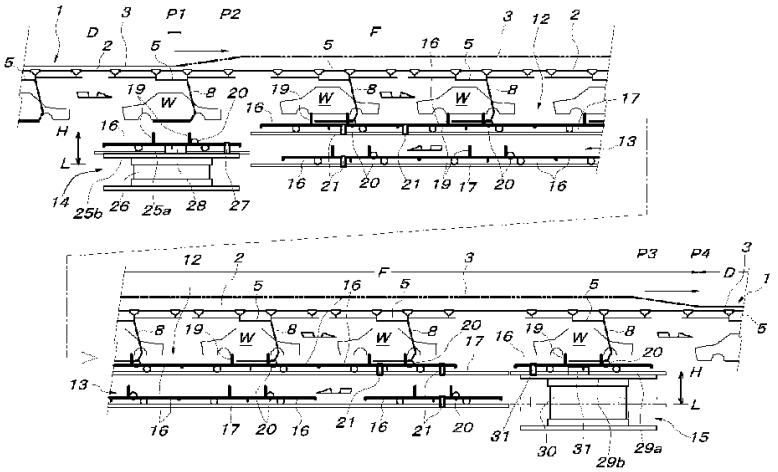

(57) Abstract: A transportation facility in which an object transported while being suspended from a hanger such as a trolley conveyor is transferred on to a carriage of a carriage-type transportation device only for a certain section of a route. At the start point of transportation of the carriage-type transportation device, there is provided an object receiving means (14) at the under side of a traveling route of a traveling body (5) of the conveyor (1). An object support device (19) of the carriage (16) is lifted relative to the hanger (8) of the traveling body, and the object receiving means (14) is caused to receive the object (W) from the hanger. At the end of the transportation is provided an object return means (15) for lowering the object support device relative to the hanger of the traveling body to transfer the object to the hanger. In the transportation route (12) of the carriage-type transportation device, the traveling body is switched to a state in which drive is released and a hanger engagement means (20) of the carriage is engaged with the hanger so that the traveling body can be pulled and moved by the carriage.

[続葉有]

WO 2007/013348 A1

添付公開書類:
— 国際調査報告書

２文字コード及び他の略語については、定期発行される各*PCT*ガゼットの巻頭に掲載されている「コードと略語のガイダンスノート」を参照。

(57) 要約:

トロリーコンベヤなどのハンガーによって吊り下げ搬送される被搬送物を、当該被搬送物に対する作業などのために一定区間だけ台車式搬送装置の台車上に移し換えて搬送できる搬送設備を提供するものであって、トロリーコンベヤ（１）の走行体（５）の走行経路の下側に配設された台車式搬送装置の搬送開始端に、台車（１６）の被搬送物支持具（１９）を走行体のハンガー（８）に対して相対的に上げて当該ハンガーから被搬送物（W）を受け取らせる被搬送物受取手段（１４）が設けられ、搬送終了端には、前記被搬送物支持具を走行体のハンガーに対して相対的に下げて当該ハンガーに被搬送物を移載する被搬送物戻し手段（１５）を備えた搬送設備であって、台車式搬送装置の搬送経路（１２）では、走行体が駆動解除状態に切り換えられると共に台車のハンガー係止手段（２０）がハンガーを係止して当該走行体を台車が牽引移動させるようにした。

明 細 書

搬送用走行体の配送設備

技術分野

[0001] 本発明は、トロリーコンベヤや自走電車に設けられたハンガーによって吊り下げ搬送される被搬送物を一定区間だけ台車式搬送装置の台車上に移し換えて搬送する搬送設備に関するものである。

背景技術

[0002] 例えば自動車の組立ラインでは、トロリーコンベヤの走行体や自走電車に設けられたハンガーで吊り下げ搬送される車体にエンジンやドアーなどを組み付ける作業が行われるが、この場合、ハンガーで支持された車体に対する部品組み付け作業を台車式搬送装置の台車上で行うことが知られている。このような場合に使用できる搬送設備としては、例えば特許文献1に記載されるように、車体を支持するハンガーを備えた走行体(プッシャーで駆動されるトロリーコンベヤの走行体)を床側の搬送装置と同期させて走行させ、床側の搬送装置上から前記ハンガーで吊り下げ搬送される車体に対する部品組み付け作業などを行うように構成された搬送設備や、特許文献2に記載された搬送設備のように、ハンガーで吊り下げ搬送される被搬送物を、当該ハンガーを備えたトロリーコンベヤの走行体や自走電車と同期走行する台車式搬送装置の台車上に移し替え、当該台車上での作業終了後に再び台車上の車体をハンガーに戻すように構成された搬送設備が知られている。

特許文献1:特公平4－5581号公報

特許文献2:特開平7－157073号公報

発明の開示

発明が解決しようとする課題

[0003] しかしながら、上記のような従来周知の搬送設備では、作業完了までの間、車体などの被搬送物を吊り下げ搬送する被搬送物吊下式搬送装置(トロリーコンベヤの走行体や自走電車)と作業者が搭乗して作業を行う台車式搬送装置(台車)とを同期運転する必要があり、両搬送装置の制御に高度の技術を必要とするばかりでなく、特許

文献1に記載されたような搬送設備を使用するときは、被搬送物を吊り下げるハンガーが邪魔になるような場所に対する部品組み付け作業が行えない。

課題を解決するための手段

[0004] 本発明は上記のような従来の問題点を解消し得る搬送設備を提供することを目的とするものであって、請求項1に記載の本発明に係る搬送設備は、後述する実施形態の参照符号を括弧付きで付して示すと、被搬送物吊下式搬送装置（P＆F形式のトロリーコンベヤ(1)）と、台車式搬送装置(11)と、被搬送物受取手段(14)と、被搬送物戻し手段(15)とを備えた搬送設備であって、前記被搬送物吊下式搬送装置（P＆F形式のトロリーコンベヤ(1)）は、被搬送物支持用ハンガー(8)が設けられた走行体(5)を備えると共に、この走行体(5)の走行経路中には、当該走行体(5)を強制走行させる駆動区間(D)と、当該走行体(5)を移動自由な状態とする駆動解除区間(F)とが設けられ、前記台車式搬送装置(11)は、前記走行体(5)の走行経路の駆動解除区間(F)の下側で当該走行経路に沿って走行可能な台車(16)を備えると共に、当該台車(16)上には被搬送物支持具(19)が設けられ、前記被搬送物受取手段(14)は、前記台車式搬送装置(11)の搬送開始端において前記被搬送物支持具(19)を前記走行体(5)のハンガー(8)に対して相対的に上げて当該ハンガー(8)から被搬送物(W)を前記被搬送物支持具(19)に移載する手段であり、前記被搬送物戻し手段(15)は、前記台車式搬送装置(11)の搬送終了端において前記被搬送物支持具(19)を前記走行体(5)のハンガー(8)に対して相対的に下げて当該被搬送物支持具(19)からハンガー(8)に被搬送物(W)を移載する手段である搬送設備において、

前記被搬送物吊下式搬送装置（P＆F形式のトロリーコンベヤ(1)）の走行体(5)の被搬送物支持用ハンガー(8)には、被係止部(42a)が設けられ、前記台車式搬送装置(11)の台車(16)には、前記ハンガー(8)の被係止部(42a)に対し係脱自在なハンガー係止手段(20)が設けられ、前記台車式搬送装置(11)の搬送経路(12)では、前記ハンガー係止手段(20)が前記ハンガー(8)の被係止部(42a)と係合し、駆動解除状態に切り換えられている前記被搬送物吊下式搬送装置（P＆F形式のトロリーコンベヤ(1)）の走行体(5)を前記台車(16)が前記ハンガー(8)を介して牽引移動させる構成となっている。

[0005] 上記構成の本発明を実施するについて、前記被搬送物吊下式搬送装置は、走行用駆動手段を備えているが特定区間では自由に前後に遊動させることができる駆動解除状態とすることができる自走電車に被搬送物支持用ハンガー(8)を吊り下げたものでも良いが、請求項2に記載のように、前記被搬送物吊下式搬送装置は、その走行体(5)の走行経路に沿って移動するプッシャーで当該走行体(5)を推進させるトロリーコンベヤ(1)により構成し、前記駆動解除区間(F)では、前記トロリーコンベヤ(1)の走行体(5)がプッシャーから切り離されて駆動解除状態に切り換えられるように構成することができる。

[0006] 前記被搬送物受取手段(14)及び被搬送物戻し手段(15)は、台車(16)に対して被搬送物支持具(19)を昇降させる構成によって実現することもできるが、請求項3に記載のように、台車(15)自体を昇降させる昇降ガイドレール(25a,29a)によって構成することができる。

[0007] ハンガー(8)から台車(16)上(被搬送物支持具(19)上)に移載された被搬送物(W)に対する部品組み込み作業などの作業部位(Wa)がハンガー(8)と重なるような場合、即ち、被搬送物(W)から切り離されたハンガー(8)が作業の邪魔になるような場合は、当該ハンガー(8)と台車(16)上の被搬送物(W)とを前後方向に所定距離だけ相対移動させれば良いが、この場合、請求項4に記載のように、前記ハンガー係止手段(20)を、前記台車式搬送装置(11)の搬送開始端においてハンガー(8)から被搬送物(W)を受け取った被搬送物支持具(19)と当該ハンガー(8)とが相対的に一定距離前後方向に移動したときにハンガー(8)側の被係止部(42a)に対応する位置に設け、前記台車式搬送装置(11)の搬送終了端においては、被搬送物(W)を支持する被搬送物支持具(19)とハンガー(8)とを元の前後方向相対位置に戻した後、前記被搬送物戻し手段(15)を動作させるように構成すれば良い。この場合の前記台車式搬送装置(11)の搬送開始端及び搬送終了端における被搬送物支持具(19)とハンガー(8)との相対的前後方向移動は、例えば、請求項5に記載のように台車(16)そのものを前後方向に移動させることによって実現できるが、その他、台車(16)に対して当該台車(16)上の被搬送物支持具(19)を前後方向に移動させる方法や、定位置にある台車(16)に対してハンガー(8)(当該ハンガー(8)を備えたトロリーコンベヤ(1)の走行体(5)や当該ハンガー(8)を

備えた自走電車など)を前後方向に移動させる方法によっても実現できる。

[0008] 前記台車式搬送装置(11)は、先に説明したように自走可能な電車を利用したものであっても良いが、自走できない台車(16)を台車走行経路側に配設された台車駆動手段(摩擦駆動手段(21))により推進させる構成のものである場合は、請求項6に記載のように、前記被搬送物受取手段(14)には、台車(16)を搬送経路(12)側へ送り出す台車送り出し手段(台車引き込み送り出し手段(27))と、支持する台車(16)を、前記ハンガー係止手段(20)がハンガー(8)の被係止部(42a)に対応する位置まで前後方向に移動させる台車用フィーダー(28)とを設け、前記被搬送物戻し手段(15)には、搬送経路(12)から送り込まれる台車(16)を所定位置まで引き込む台車引き込み手段(台車引き込み送り出し手段(31))と、支持する被搬送物(W)とハンガー(8)とが元の前後方向相対位置に戻るように台車(16)を前後方向に復帰移動させる台車用フィーダー(32)とを設けることができる。この場合、請求項7に記載のように、前記台車用フィーダー(28,32)は、台車(16)に設けられた被把持部(55)を前後から挟持する前後一対の開閉挟持片(56a,56b)と、この開閉挟持片(56a,56b)の開閉用駆動手段(57)と、前記開閉挟持片(56a,56b)を前後方向に往復移動させる移動用駆動手段(58)とから構成することができる。

[0009] 前記被搬送物吊下式搬送装置(トロリーコンベヤ(1))のハンガーは、当該ハンガー(8)が支持する被搬送物(W)を台車(16)側の被搬送物支持具(19)で下から受け取らせることができる構成のものであれば、如何なる構成のものでも良いが、自動車組立ラインなどで使用される車体支持用ハンガーとして一般的なハンガー、即ち、左右横方向に開閉する左右一対のハンガーアーム(10a,10b)を備えたものであるときは、請求項8に記載のように、前記ハンガー係止手段(20)は、左右各ハンガーアーム(10a,10b)に設けられた被係止部(42a,42b)に対し係脱自在な左右一対の係止具(34a,34b)と、この左右一対の係止具(34a,34b)を連動させて係脱動作させる1つの係止具位置切り換え手段(35a)又は(35b)とから構成することができる。この場合、請求項9に記載のように、前記左右一対の係止具(34a,34b)は、スプリング(40a,40b)により被係止部(42a,42b)に係合する上位置に付勢保持させると共に、各係止具(34a,34b)それぞれに連動昇降するカム従動ローラー(39a,39b)を台車(16)側に設け、前記係止具位置切り換え

手段(35a)又は(35b)は前記被搬送物受取手段(14)及び被搬送物戻し手段(15)の位置に台車(16)があるときに当該台車(16)側の前記カム従動ローラー(39a,39b)と係合するように前記被搬送物受取手段(14)及び被搬送物戻し手段(15)にそれぞれ併設されたカムレール(52a,52b)と、これらカムレール(52a,52b)を昇降させるカムレール駆動手段(シリンダーユニット(54))とから構成することができる。更にこの場合、請求項10に記載のように、前記左右一対の係止具(34a,34b)は、左右横向きに配置され且つ中間に支点を有する左右一対のシーソー運動体(37a,37b)の外端にそれぞれ設け、両シーソー運動体(37a,37b)の内端に昇降体(38a,38b)を連動連結すると共に当該昇降体(38a,38b)の下端に前記カム従動ローラー(39a,39b)を軸支することができる。

[0010] 又、前記ハンガー係止手段(20)を、前記ハンガー(8)に設けられた被係止部(42a)に対し上下方向に嵌合離脱自在な係止具(34a)と、この係止具(34a)を昇降移動させる係止具位置切り換え手段(35a)又は(35b)とから構成する場合、請求項11に記載のように、前記係止具(34a)は、前記被係止部(42a)を挟む前後一対の係止部(43a,43b)を備えたものとし、この前後一対の係止部(43a,43b)の内、被係止部(42a)を後押しする後側係止部(43b)は、一定範囲内前後移動自在に構成すると共にスプリング(47)により前側定位置に付勢保持させ、当該後側係止部(43b)が前記スプリング(47)に抗して後方に移動したことを検知するためのセンサー(51)を併設することができる。

発明の効果

[0011] 上記請求項1に記載の本発明に係る搬送設備によれば、被搬送物吊下式搬送装置の被搬送物支持用ハンガーによって吊り下げ搬送している被搬送物に対し部品組み付け作業などを行う区間の床側に台車式搬送装置を設置し、この台車式搬送装置の搬送開始端に対応する定位置で被搬送物吊下式搬送装置の走行体(ハンガー)を停止させた状態で当該搬送開始端に配設された被搬送物受取手段を動作させることにより、前記ハンガーに支持されていた被搬送物を前記台車式搬送装置の台車上に乗り移らせ、台車式搬送装置の搬送終了端までは前記台車の被搬送物支持具で支持させた状態で被搬送物を搬送させることができるので、当該被搬送物に対する部品組み付け作業などを前記台車上で容易に行うことができるのであるが、このとき、被搬送物をそれまで支持していた空のハンガーは前記台車が備えるハンガ

一係止手段で当該台車と一体化させ、台車の走行により空のハンガーを介して被搬送物吊下式搬送装置の走行体(ハンガー)を牽引走行させることができる。従って、被搬送物を台車側に移載している間、被搬送物吊下式搬送装置の走行体(ハンガー)を台車と同期させて前進走行させるための手段や制御が全く不要になり、搬送設備全体の構成を簡略化して大幅なコストダウンを図ることができる。

[0012] 勿論、台車式搬送装置の搬送終了端まで台車によって搬送した被搬送物は、当該搬送終了端で被搬送物戻し手段の動作により台車に牽引されてきた被搬送物吊下式搬送装置の走行体(ハンガー)側に戻し、以降はこの被搬送物吊下式搬送装置の走行体(ハンガー)によって吊り下げ搬送させることができるのであるが、このときも被搬送物を台車側から受け取る被搬送物吊下式搬送装置の走行体(ハンガー)は当該台車とハンガー係止手段で一体化されていたのであるから、両者間の被搬送物の移載が安全確実に行えるように、台車とは切り離されて走行していた被搬送物受取側の走行体(ハンガー)を台車側に対して位置合わせする必要がなく、台車式搬送装置の搬送終了端での当該台車式搬送装置から被搬送物吊下式搬送装置への安全確実な被搬送物の戻し作業も容易に行わせることができる。

[0013] 尚、請求項2に記載の構成によれば、走行体走行体の走行経路に沿って移動するプッシャーで当該走行体を推進させるトロリーコンベヤを被搬送物吊下式搬送装置に活用して、本発明の搬送設備を容易に実施することができる。又、請求項3に記載の構成によれば、被搬送物受取手段及び被搬送物戻し手段を、台車に対して被搬送物支持具を昇降させる構成によって実現する場合よりも、数多く必要な台車の構成がシンプルになり、本発明の搬送設備を容易且つ安価に実施することができるばかりでなく、台車式搬送装置の台車による搬送経路の下側を空台車の戻し経路に構成した場合に必要な、台車式搬送装置の搬送開始端及び搬送終了端に必要な台車昇降手段(昇降ガイドレール)で前記被搬送物受取手段及び被搬送物戻し手段を兼ねさせることができる。

[0014] 又、台車式搬送装置の台車上に被搬送物を移載した後の空になったハンガーをそのままの位置で台車にハンガー係止手段で一体化したのでは、当該被搬送物に対する部品組み込み作業などの作業対象箇所が空になったハンガーと重なって作業

の邪魔になるような場合には、請求項4に記載の構成を採用することにより、当該被搬送物の作業対象箇所を空になったハンガーから前後方向に離して、空になったハンガーに邪魔されることなく当該被搬送物の作業対象箇所に対する作業を容易に行うことができる。この場合、請求項5に記載の構成によれば、請求項4に記載の構成を簡単容易に実施することができる。

[0015] 前記台車式搬送装置が、自走できない台車を台車走行経路側に配設された台車駆動手段により推進させる構成のものである場合は、請求項6や請求項7に記載の構成を採用することにより、請求項5に記載の構成を含めて本発明を簡単容易に実施することができる。

[0016] 前記被搬送物吊下式搬送装置のハンガーが、自動車組立ラインなどで使用される車体支持用ハンガーとして一般的なハンガー、即ち、左右横方向に開閉する左右一対のハンガーアームを備えたものであるときは、請求項8に記載の構成を採用することにより、左右一対のハンガーアームの何れか片側のハンガーアームのみを台車側にハンガー係止手段で係止一体化させる場合よりも、ハンガーを介して被搬送物吊下式搬送装置の走行体を台車で牽引させる作用を無理なく確実に行わせることができる。しかも、左右一対のハンガーアームを各別に係止する左右一対の係止具を1つの係止具位置切り換え手段により係止作用位置と係止解除位置とに切り換えることができるので、各係止具ごとに係止具位置切り換え手段を設ける場合よりも制御が簡単になる。

[0017] 上記の請求項8に記載の構成を採用する場合、請求項9に記載のように実施することにより、台車式搬送装置の台車による搬送経路の全域にわたって前記左右一対の係止具を位置切り換え手段で係止作用位置に保持する必要がなく、前記左右一対の係止具を係止作用位置に切り換えたり係止解除位置に切り換えたりするための手段として、前記被搬送物受取手段及び被搬送物戻し手段の位置にのみカムレールと当該カムレールを昇降させるカムレール駆動手段とを配設しておくだけで良いので、台車側に前記左右一対の係止具を位置切り換えのための駆動源を設けなければならない場合よりも、容易且つ安価に本発明を実施することができる。更にこの場合、請求項10に記載の構成によれば、前記左右一対の係止具はハンガーの左右一対

のハンガーアームに対応させて台車の左右両側に配設しながら、両係止具に連動する左右一対の昇降するカム従動ローラーは台車の左右巾方向の中央側に寄せて配設することができ、前記被搬送物受取手段及び被搬送物戻し手段の位置に各カム従動ローラーに対応して配設される左右一対のカムレールを一体化し、1つのカムレール駆動手段で一体に昇降駆動することが容易になる。

[0018] 又、請求項11に記載の構成によれば、ハンガー係止手段で台車に係止一体化したハンガーを介して被搬送物吊下式搬送装置の走行体を台車で牽引している状況において、被搬送物吊下式搬送装置の走行体が何らかの原因で円滑な走行が行えない事態に陥り、台車に対してハンガー側が大きな抵抗になった場合、センサーで係る事態を速やかに検知させることができるので、当該センサーの検知信号に基づいて台車の推進駆動に非常停止をかけるなど、必要な対策を自動的にとらせることが容易に行える。

図面の簡単な説明

[0019] [図1]本発明の搬送設備の全体の構成を説明する概略側面図である。

[図2]被搬送物受取手段で吊下搬送されてきた被搬送物を受け取る直前の状態を説明する側面図である。

[図3]図2の状態から1段階進んだ状態を説明する側面図である。

[図4]図3の状態から1段階進んだ状態を説明する側面図である。

[図5]図4の状態から1段階進んだ状態を説明する側面図である。

[図6]被搬送物受取手段から台車式搬送装置の搬送経路へ台車が送り出されるときの状態を説明する側面図である。

[図7]被搬送物戻し手段での作用を説明する側面図である。

[図8]被搬送物受取手段及び被搬送物戻し手段の構成を説明する正面図である。

[図9]ハンガー係止手段の構成を説明する図で、A図は係止作用状態にあるハンガー係止手段を示す正面図、B図は係止解除状態にあるハンガー係止手段を示す正面図である。

[図10]ハンガー係止手段の係止具の具体的構成を説明する側面図である。

[図11]A図～C図はハンガー係止手段の各段階での状態を説明する側面図である。

[図12]A図～C図は台車用フィーダーの各段階での状態を説明する側面図である。

符号の説明

[0020] 1　パワー＆フリー形式のトロリーコンベヤ(被搬送物吊下式搬送装置)

2　フリーライン

3　パワーライン

4, 4a　トロリー

5　走行体

6　被動用ドッグ

8　被搬送物支持用ハンガー

9c　ハンガーアームの被搬送物支持部

10a, 10b　左右一対のハンガーアーム

11　台車式搬送装置

12　搬送経路

13　台車戻り経路

14　被搬送物受取手段

15　被搬送物戻し手段

16　台車

19　被搬送物支持具

20　ハンガー係止手段

21　摩擦駆動手段

22a, 22b　左右一対の帯状垂直摩擦面

23　モーター駆動の摩擦駆動輪

24　バックアップローラー

25a、29a　昇降ガイドレール

25b, 29b　昇降台

26, 30　昇降用駆動手段

27, 31　台車引き込み送り出し手段

28, 32　台車用フィーダー

34a, 34b　左右一対の係止具

35a, 35b　係止具位置切り換え手段

37a, 37b　シーソー運動体

38a, 38b　左右一対の棒状昇降体

39a, 39b　カム従動ローラー

40a, 40b　引張スプリング

42a, 42b　ハンガーの被係止部

43a, 43b　前後一対の係止部(ローラー)

44a　L形アーム部

44b　軸受け部材

46　レバーアーム

47　スプリング

51　過負荷検知用センサー

52a, 52b　左右一対のカムレール

54　カムレール駆動手段(シリンダーユニット)

55　台車側の被把持部

56a, 56b　前後一対の開閉挟持片

57　開閉用駆動手段

58　移動用駆動手段

60　可動部材

61　スライドガイド

62　中継ロッド

63, 66　シリンダーユニット

65　リンク

D　トロリーコンベヤの駆動区間

F　トロリーコンベヤの駆動解除区間

W　被搬送物

発明を実施するための最良の形態

[0021] 以下に本発明の具体的実施例を添付図に基づいて説明すると、図1及び図2において、1は被搬送物吊下式搬送装置として本実施形態で使用した従来周知のパワー&フリー形式のトロリーコンベヤであり、下側ガイドレールで構成されるフリーライン2と上側ガイドレールで構成されたパワーライン3とを備え、フリーライン2には、複数のトロリー4，4aを介して走行体5が走行可能に吊り下げられ、パワーライン3の上側ガイドレールには、前記走行体5の先頭のトロリー4aに設けられた被動用ドッグ6に係脱自在なプッシャーを適当間隔おきに備えた駆動用チエンがトロリーを介して吊り下げられ、フリーライン2とパワーライン3との上下間隔が、パワーライン3側のプッシャーがフリーライン2側の走行体5の被動用ドッグ6に係合し得る間隔に設定されている駆動区間Dでは、前記走行体5がプッシャーによりフリーライン2に沿って推進せしめられ、フリーライン2とパワーライン3との上下間隔が上記間隔よりも広くなるか又はフリーライン2上からパワーライン3が横側方に離れる駆動解除区間Fでは、プッシャーによる前記走行体5の駆動が解除され、当該走行体5がフリーライン2上で停止し、フリーライン2に併設された位置決め手段がなければフリーライン2上で自由に遊動できる状態になる。

[0022] 尚、図1に仮想線で示した駆動解除区間Fにおけるパワーライン3は、フリーライン2から上方に離間させてあり、当該駆動解除区間Fの下手側の駆動区間Dで再び元の高さに戻されるように構成しているが、当該駆動解除区間Fにおけるパワーライン3を横側方に迂回させることもできるし、当該駆動解除区間Fの下手側の駆動区間Dで使用されるパワーライン3として、駆動解除区間Fの上手側の駆動区間Dで使用されるパワーライン3とは別の駆動手段で駆動される別系統のパワーライン3を使用することもできる。

[0023] トロリーコンベヤ1の走行体5には被搬送物支持用ハンガー8が吊り下げられている。このハンガー8は、図2及び図8に示すように、左右一対のハンガーアーム10a，10bから成るもので、各ハンガーアーム10a，10bは、縦杆部9aと当該縦杆部9aの下端からほぼ水平後方に延出する水平杆部9b、及び水平杆部9bから内向きに連設された被搬送物支持部9cから構成されている。自動車の車体などの被搬送物Wは、図8に示すように、正面から見て両ハンガーアーム10a，10bの縦杆部9aの内側に納ま

る状態で、その底部の左右両側辺が両ハンガーアーム10a，10bの被搬送物支持部9cで支持される。尚、両ハンガーアーム10a，10bは被搬送物Wの積み下ろしのために左右横方向に開閉運動可能に構成されている。

[0024] 図1において、11は台車式搬送装置であって、トロリーコンベヤ1の駆動解除区間Fにおけるフリーライン2の直下で当該フリーライン2と平行に配設された搬送経路12、当該搬送経路12の下側に当該搬送経路12と平行に配設された台車戻り経路13、搬送経路12の搬送開始端に配設された被搬送物受取手段14、及び搬送経路12の搬送終了端に配設された被搬送物戻し手段15から構成され、複数台の台車16が被搬送物受取手段14から搬送経路12、被搬送物戻し手段15、台車戻り経路13をこの順に経由して被搬送物受取手段14に戻るように循環走行するものである。而して各台車16は、1つの被搬送物Wより適当長さだけ全長が長いもので、搬送経路12や台車戻り経路13側のガイドレール17に車輪18を介して直進走行可能に支持され、被搬送物支持具19とハンガー係止手段20とを備えたものであるが、走行用駆動手段は設けられておらず、走行経路脇に配設された摩擦駆動手段21（図1参照）から受ける推進力によって走行する。摩擦駆動手段21は、図8に示すように、被搬送物受取手段14や被搬送物戻し手段15に併設される台車引き込み送り出し手段27，31と同様に、台車16の走行方向と平行で台車16の全長にわたって連続するように台車16に設けられた左右一対の帯状垂直摩擦面22a，22b（図示例では、台車16の左右両側面をそのまま利用している）の内、一方の摩擦面22aに圧接するモーター駆動の摩擦駆動輪23と、他方の摩擦面22bに当接するバックアップローラー24との組み合わせから構成されている。

[0025] 上記の摩擦駆動手段21は、図1に示すように台車式搬送装置11の搬送経路12や台車戻り経路13の適当位置に必要に応じて制動手段などと共に配設され、搬送経路12では、被搬送物受取手段14からこの搬送経路12内に送り出される台車16を引き継いで、直後の台車16が直前の台車16を後押しする前後突き合いの状態で搬送経路12の終端まで定速で推進させ、被搬送物戻し手段15が台車受入可能になったときに搬送経路12の終端から当該被搬送物戻し手段15へ台車16を1台ずつ送り出すように構成され、台車戻り経路13では、被搬送物戻し手段15からこの台車戻り経

路13内に送り出される台車16を引き継いで被搬送物受取手段14側へ高速走行させ、被搬送物受取手段14が台車受入可能になったときに台車戻り経路13の終端から当該被搬送物受取手段14へ台車16を1台ずつ送り出すように構成されている。

[0026] 被搬送物受取手段14は、図2に示すように、1台の台車16を支持し得る長さの昇降ガイドレール25aが敷設された昇降台25bと、この昇降台25bを、昇降ガイドレール25aが搬送経路12のガイドレール17の始端に接続する上昇限レベルHと昇降ガイドレール25aが台車戻り経路13のガイドレール17の終端に接続する下降限レベルLとの間で昇降させる昇降用駆動手段26とから構成され、昇降台25bには、台車引き込み送り出し手段27と台車用フィーダー28とが搭載されている。被搬送物戻し手段15は、図7に示すように、1台の台車16を支持し得る長さの昇降ガイドレール29aが敷設された昇降台29bと、この昇降台29bを、昇降ガイドレール29aが搬送経路12のガイドレール17の終端に接続する上昇限レベルHと昇降ガイドレール29aが台車戻り経路13のガイドレール17の始端に接続する下降限レベルLとの間で昇降させる昇降用駆動手段30とから構成され、昇降台29bには、台車引き込み送り出し手段31と台車用フィーダー32とが搭載されている。昇降用駆動手段26, 30には、クロスリンク機構方式やラックピニオンギヤ方式、シリンダーによる直接昇降駆動方式など、従来周知の各種方式のものが利用される。

[0027] 各台車16に設けられたハンガー係止手段20は、図8及び図9に示すように、左右一対の係止具34a, 34bと、両係止具34a, 34bを係止作用上位置と係止解除下位置とに切り換える係止具位置切り換え手段35a, 35bとから構成されている。而して、左右一対の係止具34a, 34bは、左右対称形に配置されると共に中央部が前後方向水平支軸36a, 36bで台車16側に軸支された左右一対のシーソー運動体37a, 37bの外端に設けられ、各シーソー運動体37a, 37bの内端には、台車16側に昇降のみ可能に支持された左右一対の棒状昇降体38a, 38bの上端部がそれぞれ長孔とピンとを介して連結され、これら両棒状昇降体38a, 38bの下端外側にはカム従動ローラー39a, 39bが左右方向水平支軸で軸支され、各シーソー運動体37a, 37bの内端側と台車16側との間に掛張された引張スプリング40a, 40bにより、各シーソー運動体37a, 37bの内端側が台車16側のストッパー41a, 41bで受け止められるように各

シーソー運動体37a，37bが付勢されている。従って、両カム従動ローラー39a，39bに下向きの操作力が働いていない状況では、各係止具34a，34bが係止作用上位置に保持されると共に両棒状昇降体38a，38bが上昇限まで上昇して両カム従動ローラー39a，39bが上昇限に同心状で位置する状態にある。

[0028] 左右一対の係止具34a，34bは、図10に示すように、被搬送物支持用ハンガー8の左右一対のハンガーアーム10a，10bにおける被搬送物支持部9cの基部で構成された被係止部42a，42bを前後から挟む前後一対の係止部43a，43bから構成されている。これら各係止部43a，43bは、各係止具34a，34bが係止作用上位置にあるとき（シーソー運動体37a，37bが水平姿勢にあるとき）に左右方向水平向きとなる支軸で軸支されたローラーから構成され、搬送経路12における台車走行方向側に位置する前側係止部43aのローラーは、シーソー運動体37a，37bの外端から連設されたL形アーム部44aの先端に軸支され、ハンガー8を後押しする後側係止部43bのローラーは、シーソー運動体37a，37bの外端から連設された軸受け部材44bに前記ローラーを軸支する支軸と平行な支軸45で中間位置が軸支されたレバーアーム46の上端に軸支されて、前側係止部43aのローラーに対して遠近方向（前後方向）に一定範囲内で移動可能に構成され、前記レバーアーム46の下端部を押圧付勢するスプリング47により、前側係止部43aのローラーとの間に被係止部42a，42bが相対的に嵌入する凹部を形成する位置に付勢保持されている。尚、前記スプリング47は、軸受け部材44bの先端に支軸48で軸支され且つレバーアーム46の下端部を貫通する軸杆49の遊端部に螺嵌されたバネ受け座50aと、当該軸杆49に軸方向遊動自在に遊嵌された可動バネ受け座50bとの間で軸杆49に遊嵌され、可動バネ受け座50を介してレバーアーム46の下端部を付勢する。

[0029] 上記構成の左右一対の係止具34a，34bには、過負荷検知用センサー51がそれぞれ併設されている。このセンサー51は、軸受け部材44bに取り付けられたリミットスイッチから構成されたもので、各係止具34a，34bにおけるレバーアーム46の上端外側に付設された当接部材46aを介して、当該レバーアーム46（後側係止部43b）がスプリング47の付勢力に抗して一定角度揺動したことを検知する。

[0030] 係止具位置切り換え手段35aは、図2に示すように被搬送物受取手段14の昇降台

26に設けられ、係止具位置切り換え手段35bは、図7に示すように被搬送物戻し手段15の昇降台31に設けられており、各係止具位置切り換え手段35a，35bは、台車16が被搬送物受取手段14の昇降ガイドレール25又は被搬送物戻し手段15の昇降ガイドレール30の定位置に乗り移ったとき、図8及び図9に示すように、当該台車16の両カム従動ローラー39a，39bが各別に嵌合する左右一対のカムレール52a，52bと、両カムレール52a，52bを支持する1つの昇降台53を昇降駆動するカムレール駆動手段（シリンダーユニット）54とから構成されている。

[0031] 被搬送物受取手段14の昇降台25bに設けられた台車用フィーダー28と被搬送物戻し手段15の昇降台29bに設けられた台車用フィーダー32とは、図8及び図12に示すように、台車16の底部の左右一側部に下向きに突設された被把持部55を前後から挟持する前後一対の開閉挟持片56a，56bと、この開閉挟持片56a，56bの開閉用駆動手段57と、前記開閉挟持片56a，56bを前後方向に往復移動させる移動用駆動手段58とから構成されている。具体的に説明すると、前後一対の開閉挟持片56a，56bと開閉用駆動手段57とは、昇降台25b，29bに付設されたスライドガイドレール59を介して昇降ガイドレール25a，29a上での台車16の前後移動方向に移動自在に支持された可動部材60に取り付けられ、移動用駆動手段58は、前記可動部材60に一端が連結され且つ昇降台25b，29bに付設されたスライドガイド61によって前後方向移動自在に支持された中継ロッド62の他端と昇降台25b，29bとの間に介装されたシリンダーユニット63によって構成されている。

[0032] 前後一対の開閉挟持片56a，56bは、それぞれ支軸64a，64bによって前記可動部材60に軸支されると共に、リンク65によって互いに連動して開閉運動するように連動連結され、一方の開閉挟持片56aと前記可動部材60との間に、開閉用駆動手段57を構成するシリンダーユニット66が介装されている。従って、シリンダーユニット66のピストンロッドの出し入れにより前後一対の開閉挟持片56a，56bを開閉動作させることができ、シリンダーユニット63のピストンロッドの出し入れにより、前後一対の開閉挟持片56a，56bを開閉用駆動手段57（シリンダーユニット66）と共に前後移動させることができる。

[0033] 以下、上記構成の搬送設備の使用方法について説明すると、トロリーコンベヤ1の

駆動区間Dを駆動解除区間Fに向かって走行する走行体5、即ち、ハンガー8により被搬送物Wを吊り下げた走行体5は、図1及び図2に示す駆動区間Dの終端位置（駆動解除区間Fの始端位置）P1で駆動解除されるので、フリーライン2に併設された適当な補助フィーダー（図示省略）により、被搬送物受取手段14の上方定位置にハンガー8が位置する定停止位置P2まで移動させる。勿論、トロリーコンベヤ1の駆動区間Dの終端位置P1で走行体5を精度良く停止させることができるならば、前記駆動区間Dの終端位置P1を被搬送物受取手段14に対する定停止位置P2の位置に設定して、前記補助フィーダーを無くすことも可能である。

[0034] 一方、被搬送物受取手段14では、昇降台25bを下降限レベルLに下降させ、台車式搬送装置11における台車戻り経路13のガイドレール17上から被搬送物受取手段14における昇降ガイドレール25a上の定位置まで1台の空台車16を、台車戻り経路13の終端に併設されている摩擦駆動手段21と前記昇降台25b側の台車引き込み手段27とで移載させる。台車戻り経路13上の空台車16のハンガー係止手段20は、その左右一対の係止具34a，34bが、図9に示すスプリング40a，40bの付勢力で係止作用上位置に保持されている状態であるから、当該空台車16を引き込む側の被搬送物受取手段14側では、昇降台25bに配設されている係止具位置切り換え手段35aのカムレール52a，52bをカムレール駆動手段（シリンダーユニット）54により下降限レベルまで下げておき、昇降ガイドレール25a上に引き込まれる空台車16のハンガー係止手段20における左右一対のカム従動ローラー39a，39bを係止具位置切り換え手段35aのカムレール52a，52b内に進入させる（図9A参照）。そして空台車16が定位置まで引き込まれて停止したならば、係止具位置切り換え手段35aのカムレール52a，52bをカムレール駆動手段（シリンダーユニット）54により上昇限レベルまで上昇させ、カム従動ローラー39a，39bを介してシーソー運動体37a，37bをスプリング40a，40bの付勢力に抗して揺動させることにより、左右一対の係止具34a，34bを係止解除下位置に切り換えておく（図9B参照）。尚、図1に示すように、空台車16が定位置に移載された被搬送物受取手段14の昇降台25bは、下降限レベルLと上昇限レベルHとの間の中間レベルまで上昇させた状態で待機させておくことができる。

[0035] 先に述べたように、トロリーコンベヤ1の走行体5が被搬送物受取手段14に対する定停止位置P2で停止したならば、図3に示すように、空台車16を定位置に支持している被搬送物受取手段14の昇降台25bを上昇限レベルHまで上昇させる。この結果、空台車16の被搬送物支持具19が走行体5のハンガー8に支持されていた被搬送物Wを持ち上げ、当該被搬送物Wをハンガー8から所定高さdだけ浮上させることになる。このとき、係止解除下位置に切り換えられているハンガー係止手段20の左右一対の係止具34a，34bは、図11Aに示すように、被搬送物Wを支持していたハンガー8の被係止部42a，42bよりも一定距離だけ前方で且つ下方位置にある。又、被搬送物受取手段14の昇降台25bに配設されている台車用フィーダー28は、図12Aに示すように前後一対の開閉挟持片56a，56bが、当該昇降ガイドレール25a上の定位置に停止した台車16の被把持部55の真下位置で前後に開いた状態（シリンダーユニット66のピストンロッドが引き込まれた状態）にある。

[0036] 昇降ガイドレール25a上の台車16で走行体5のハンガー8から被搬送物Wを受け取らせたならば、図12Bに示すように、台車用フィーダー28におけるシリンダーユニット66のピストンロッドを進出させて前後一対の開閉挟持片56a，56bを閉動させることにより、被搬送物Wを支持している台車16の被把持部55を前後一対の開閉挟持片56a，56bで前後から挟持させる。係る状態で移動用駆動手段58のシリンダーユニット63により可動部材60を一定距離sだけ後方に移動させることにより、図4に示すように、当該台車16を昇降ガイドレール25a上で後方に一定距離sだけ移動させる。このとき、ハンガー係止手段20が台車16に設けられているので、図4及び図11Bに示すように、係止解除下位置に切り換えられているハンガー係止手段20の左右一対の係止具34a，34bもハンガー8に対して後方へ一定距離sだけ移動し、当該左右一対の係止具34a，34bがハンガー8の被係止部42a，42bの真下位置に位置することになる。而して、当該係止具34a，34bと一体に後方に移動するカム従動ローラー39a，39bは、昇降台25b側にあって後方には移動しないカムレール52a，52b内を移動することになるが、この移動によってカム従動ローラー39a，39bがカムレール52a，52b内からは離脱しないように、当該カムレール52a，52bの長さが設定されている。従って、係る状態で係止具位置切り換え手段35aのカムレール52a，52bをカムレ

ール駆動手段(シリンダーユニット)54により下降限レベルまで下降させ、カム従動ローラー39a, 39bを介して台車16側のシーソー運動体37a, 37bをスプリング40a, 40bの付勢方向に水平姿勢まで揺動復帰させることにより(図9A参照)、左右一対の係止具34a, 34bを係止解除下位置から係止作用上位置に切り換えて、図5及び図11Cに示すように、各係止具34a, 34bをハンガー8の被係止部42a, 42bに係止させる。即ち、各係止具34a, 34bの前後一対の係止部(ローラー)43a, 43b間にハンガー8の被係止部42a, 42bを嵌合させる。

[0037] 被搬送物受取手段14における上記の一連の動作により、図2に示すように、トロリーコンベヤ1のハンガー8で支持されて吊下搬送されていた被搬送物Wは、当該ハンガー8に対して持ち上げられると共に後方に一定距離sだけ移動せしめられた状態で台車16の被搬送物支持具19に支持され、被搬送物Wの支持から開放されたハンガー8は、ハンガー係止手段20を介して台車16に係止されることになる。従って、当該被搬送物Wの左右両側の作業部位(例えば自動車車体に対する前側左右両ドアーの取付部位)Waが、当該被搬送物Wがトロリーコンベヤ1のハンガー8で支持されて吊下搬送されていたときに当該ハンガー8の左右一対のハンガーアーム10a, 10bにおける縦杆部9aと横から見て重なる位置にあったとしても、この被搬送物Wがハンガー8から台車16上に移載された最終段階では、図5に示すように前記作業部位Waは、当該被搬送物Wの左右両側に位置するハンガー8の左右一対のハンガーアーム10a, 10bにおける縦杆部9aから横から見て後方に外れた位置に移動したことになる。換言すれば、このような結果となるように被搬送物受取手段14上での台車用フィーダー28による台車16の後方への移動距離sが設定されている。

[0038] 次に、台車用フィーダー28におけるシリンダーユニット66のピストンロッドを引き込み移動させて前後一対の開閉挟持片56a, 56bを開動させ、当該開閉挟持片56a, 56bを台車16側の被把持部55より下側レベルに逃がした後、直ちに、又はこの後の適当な時期に、移動用駆動手段58のシリンダーユニット63により可動部材60を一定距離sだけ前方に移動復帰させ、この台車用フィーダー28を元の待機状態に戻す。前記のように開閉挟持片56a, 56bを開動させて台車16側の被把持部55より下側レベルに逃がしたならば、図6に示すように、この被搬送物受取手段14における昇降

ガイドレール25a上の台車16を台車引き込み送り出し手段27により搬送経路12のガイドレール17上に送り出すと共に当該搬送経路12が備える摩擦駆動手段21により当該搬送経路12上で定速走行駆動することにより、被搬送物支持具19で支持する被搬送物Wを搬送経路12上で定速搬送すると共に、当該被搬送物Wの支持から開放された状態のハンガー8を備えたトロリーコンベヤ1の走行体5を、当該ハンガー8とハンガー係止手段20とを介して、台車16が走行する搬送経路12と平行な駆動解除区間Fのフリーライン2に沿って当該台車16により牽引移動させることができる。この状態において、例えば被搬送物Wの左右両側の作業部位Waに対する作業を、当該被搬送物Wと一体に移動するトロリーコンベヤ1の走行体5のハンガー8に邪魔されることなく、台車16上に搭乗した作業者によって遂行させることができる。

[0039] 上記の台車式搬送装置11における台車16での被搬送物Wの搬送過程において、ハンガー係止手段20により当該台車16に係止されて牽引されるトロリーコンベヤ1側の走行体5やハンガー8に何らかの障害が発生し、これら走行体5又はハンガー8の円滑な前進移動が妨げられるような事態が生じたときは、台車16側のハンガー係止手段20に過負荷が生じる。この過負荷は、ハンガー係止手段20における左右一対の係止具34a，34bを構成する後側係止部43bに後方向きに作用するので、結果として、後側係止部43bがスプリング47の付勢力に抗して後方に傾動し、この傾動をセンサー51が検知することになるので、当該センサー51の検知信号を利用して、当該台車16に非常停止をかけるなどの安全対策が自動的に講じられるように構成することができる。

[0040] トロリーコンベヤ1により吊下搬送される後続の各被搬送物Wも上記の一連の動作により被搬送物受取手段14において台車式搬送装置11の台車16上に移載すると共に、当該被搬送物Wを吊下搬送していたトロリーコンベヤ1の走行体5もハンガー8を介して台車16に係止し、吊下搬送していた被搬送物Wと一体に台車16により台車式搬送装置11の搬送経路12上に順次送り込み、各台車16が前後に突き合う状態で定速搬送させ、その間に各台車16上の被搬送物Wに対して所定の作業を遂行させることができる。

[0041] 台車式搬送装置11の搬送経路12の終端に達した台車16は、被搬送物戻し手段1

5の昇降ガイドレール29a上に移載させる。即ち、図7に示すように、被搬送物戻し手段15の昇降台29bを昇降駆動手段30により上昇限レベルHまで上昇させ、昇降ガイドレール28aを台車式搬送装置11の搬送経路12のガイドレール17に接続させておく。そして台車式搬送装置11の搬送経路12の終端の摩擦駆動手段21で昇降ガイドレール29a上に台車16が送り出されたならば、昇降台29b側の台車引き込み送り出し手段31により当該台車16を昇降ガイドレール29a上の定位置まで引き込み、停止させる。このとき、図1及び図7に示すように、当該台車16にハンガー係止手段20で係止されて牽引されてきたトロリーコンベヤ1の走行体5(ハンガー8)は、トロリーコンベヤ1における駆動解除区間Fの終端位置(駆動区間Dの始端位置)P4より一定距離だけ上手側の定停止位置P3で停止することになる。又、ハンガー8を係止しているハンガー係止手段20のカム従動ローラー39a, 39bは、昇降台29b側の係止具位置切り換え手段35bの下降限位置に下げられているカムレール52a, 52b内に進入し、昇降台29b側の台車用フィーダー32の前後一対の開閉挟持片56a, 56bは、後退限位置(シリンダーユニット63のピストンロッドが引き込まれた位置)にあって且つ開動した状態にあり、台車16側の被把持部55は、当該開動した状態にある前後一対の開閉挟持片56a, 56b間の真上で停止することになる。

[0042] 被搬送物Wを支持すると共に当該被搬送物Wから切り離されたハンガー8を介してトロリーコンベヤ1の走行体5を牽引移動させてきた台車16が被搬送物戻し手段15の台車引き込み送り出し手段31により昇降ガイドレール29a上の定位置まで引き込まれて停止したならば、次に、図7に示すように、昇降台29b側の係止具位置切り換え手段35bのカムレール52a, 52bをシリンダーユニット54により上昇限まで上昇させ、当該カムレール52a, 52bに進入しているカム従動ローラー39a, 39bを押し上げてシーソー運動体37a, 37bをスプリング40a, 40bの付勢力に抗して傾動させ、以て、左右一対の係止具34a, 34bを係止作用上位置から係止解除下位置に切り換え、ハンガー8における左右一対のハンガーアーム10a, 10bの被係止部42a, 42bから下方に離脱させる(図9B及び図11B参照)。このようにして台車16からハンガー8を切り離した状態で、次に昇降台29b側の台車用フィーダー32の前後一対の開閉挟持片56a, 56bを開閉用駆動手段57のシリンダーユニット66により閉動させ、真上位置

で停止している台車16の被把持部55を挟持させ、続いて当該台車用フィーダー32の移動用駆動手段58のシリンダーユニット63により当該開閉挟持片56a，56bを一定距離sだけ前進移動させる。この結果、支持している被搬送物Wと共に台車16が一定距離sだけ昇降ガイドレール29a上で前進移動し、当該台車16が支持している被搬送物Wが、定停止位置P3で停止したままのトロリーコンベヤ1の走行体5におけるハンガー8に対して一定距離sだけ前進移動することになる。

[0043] 上記の被搬送物戻し手段15での一連の動作により、被搬送物Wとハンガー8との前後方向の相対位置関係が、トロリーコンベヤ1における走行体5のハンガー8から台車式搬送装置11の台車16に移し替られる以前の状態、即ち、トロリーコンベヤ1で吊下搬送されているときのハンガー8と被搬送物Wとの前後方向相対位置関係に戻されたことになる。係る状態で、次に台車用フィーダー32の開閉挟持片56a，56bを開動させ、台車16の被把持部55に対する挟持を解除した後、この被搬送物戻し手段15の昇降駆動手段30により昇降台29b（昇降ガイドレール29a）を上昇限レベルHから下降限レベルLまで降下させると、これに伴って下降する台車16の被搬送物支持具19で支持されていた被搬送物Wが下降途中でハンガー8の左右一対のハンガーアーム10a，10bにおける被搬送物支持部9cに乗り移り、当該ハンガー8で支持される状態に戻される。一方、昇降ガイドレール29a上の空になった台車16は、昇降台29bが下降限レベルLに達して台車式搬送装置11の台車戻り経路13のガイドレール17と接続する状態になった昇降ガイドレール29a上から、当該昇降台29b側の台車引き込み送り出し手段31と台車戻り経路13側の摩擦駆動手段21とにより台車戻り経路13内に送り出されると共に当該台車戻り経路13上で被搬送物受取手段14に向けて搬送される。

[0044] 台車16の下降により当該台車16から切り離されてハンガー8上に戻された被搬送物Wは、当該ハンガー8を備えた走行体5、即ち、定停止位置P3で停止しているトロリーコンベヤ1の走行体5を、トロリーコンベヤ1における駆動解除区間Fの終端位置（駆動区間Dの始端位置）P4までフリーライン2に沿って併設された適当な補助フィーダーにより移動させることにより、トロリーコンベヤ1のパワーライン3を移動するプッシャーにより駆動解除区間Fの下手側の駆動区間Dにおいて再び推進させ、被搬送物

Wを吊下搬送することができる。このときの被搬送物Wとハンガー8との間の前後方向相対位置関係は、駆動解除区間Fの入り口で台車式搬送装置11の台車16に移し替られる以前の状態と同一であることは明らかである。尚、定停止位置P3を駆動解除区間Fの下手側の駆動区間Dに入った位置に設定し、当該定停止位置P3で停止した走行体5の被動ドッグ6を適当な操作手段で下げておくなどして、当該定停止位置P3で停止した走行体5の被動ドッグ6には駆動区間Dにおけるパワーライン3のプッシャーが作用しないように構成し、ハンガー8への被搬送物Wの戻し作用が完了した時点で下げられていた被動ドッグ6を復帰させるなどして、当該定停止位置P3から直ちにトロリーコンベヤ1のパワーライン3を移動するプッシャーにより走行体5を推進させるようにして、定停止置P3から走行体5を所定位置まで移動させる補助フィーダーを無くすこともできる。

[0045] 本発明は以上の実施形態のように実施できるものであるが、台車式搬送装置11の台車16上での被搬送物Wに対する作業部位Waが、当該被搬送物Wを吊下搬送してきたトロリーコンベヤ1の走行体5におけるハンガー8から離れた位置であって、当該作業部位Waに対する作業に前記ハンガー8が邪魔にならない位置であるときは、台車16上に移載された被搬送物Wと当該被搬送物Wを支持していたハンガー8とを前後方向に相対移動させる手段及び行程は省くことができる。

産業上の利用可能性

[0046] 本発明に係る搬送設備は、例えば自動車のボディーにドアーなどの各種部品を取り付ける自動車組み立てラインにおける自動車ボディーの搬送設備として利用できる。

請求の範囲

[1] 被搬送物吊下式搬送装置と、台車式搬送装置と、被搬送物受取手段と、被搬送物戻し手段とを備えた搬送設備であって、

前記被搬送物吊下式搬送装置は、被搬送物支持用ハンガーが設けられた走行体を備えると共に、この走行体の走行経路中には、当該走行体を強制走行させる駆動区間と、当該走行体を移動自由な状態とする駆動解除区間とが設けられ、

前記台車式搬送装置は、前記走行体の走行経路の駆動解除区間の下側で当該走行経路に沿って走行可能な台車を備えると共に、当該台車上には被搬送物支持具が設けられ、

前記被搬送物受取手段は、前記台車式搬送装置の搬送開始端において前記被搬送物支持具を前記走行体のハンガーに対して相対的に上げて当該ハンガーから被搬送物を前記被搬送物支持具に移載する手段であり、

前記被搬送物戻し手段は、前記台車式搬送装置の搬送終了端において前記被搬送物支持具を前記走行体のハンガーに対して相対的に下げて当該被搬送物支持具からハンガーに被搬送物を移載する手段である搬送設備において、

前記被搬送物吊下式搬送装置の走行体の被搬送物支持用ハンガーには、被係止部が設けられ、

前記台車式搬送装置の台車には、前記ハンガーの被係止部に対し係脱自在なハンガー係止手段が設けられ、

前記台車式搬送装置の搬送経路では、前記ハンガー係止手段が前記ハンガーの被係止部と係合し、駆動解除状態に切り換えられている前記被搬送物吊下式搬送装置の走行体を前記台車が前記ハンガーを介して牽引移動させるように構成されている搬送設備。

[2] 前記被搬送物吊下式搬送装置は、その走行体の走行経路に沿って移動するプッシャーで当該走行体を推進させるトロリーコンベヤにより構成され、

前記走行体の駆動解除区間では、前記プッシャーが走行体から切り離されて駆動解除状態に切り換えられるように構成された、請求項1に記載の搬送設備。

[3] 前記被搬送物受取手段及び被搬送物戻し手段は、前記台車式搬送装置の台車

自体を昇降させる昇降台によって構成されている、請求項1に記載の搬送設備。

[4] 前記ハンガー係止手段は、前記台車式搬送装置の搬送開始端においてハンガーから被搬送物を受け取った被搬送物支持具と当該ハンガーとが相対的に一定距離前後方向に移動したときにハンガー側の被係止部に対応する位置に設けられ、

前記台車式搬送装置の搬送終了端においては、被搬送物を支持する被搬送物支持具とハンガーとを元の前後方向相対位置に戻した後、前記被搬送物戻し手段を動作させるように構成された、請求項1に記載の搬送設備。

[5] 前記台車式搬送装置の搬送開始端及び搬送終了端における被搬送物支持具とハンガーとの相対的前後方向移動が、前記台車自体の前後方向移動により行われるように構成された、請求項4に記載の搬送設備。

[6] 前記台車式搬送装置は、自走できない台車を搬送経路側に配設された台車駆動手段により推進させる構成のものであり、

前記被搬送物受取手段には、台車を搬送経路側へ送り出す台車送り出し手段と、支持する台車を、前記ハンガー係止手段がハンガーの被係止部に対応する位置まで前後方向に移動させる台車用フィーダーとが設けられ、

前記被搬送物戻し手段には、搬送経路から送り込まれる台車を所定位置まで引き込む台車引き込み手段と、支持する被搬送物とハンガーとが元の前後方向相対位置に戻るように台車を前後方向に復帰移動させる台車用フィーダーとが設けられている、請求項5に記載の搬送設備。

[7] 前記被搬送物受取手段と前記被搬送物戻し手段の台車用フィーダーは、台車に設けられた被把持部を前後から挟持する前後一対の開閉挟持片と、この開閉挟持片の開閉用駆動手段と、前記開閉挟持片を前後方向に往復移動させる移動用駆動手段とから構成されている、請求項6に記載の搬送設備。

[8] 前記ハンガーは左右一対のハンガーアームを備え、

前記ハンガー係止手段は、左右各ハンガーアームに設けられた被係止部に対し係脱自在な左右一対の係止具と、この左右一対の係止具を連動させて係脱動作させる1つの係止具位置切り換え手段とから構成されている、請求項1に記載の搬送設備。

[9] 前記左右一対の係止具は、ハンガー側の被係止部に係合する上位置にスプリング

により付勢保持され、

前記台車には、各係止具それぞれに連動して昇降するカム従動ローラーが設けられ、

前記係止具位置切り換え手段は、前記被搬送物受取手段及び被搬送物戻し手段の位置に台車があるときに当該台車側の前記カム従動ローラーと係合するように前記被搬送物受取手段及び被搬送物戻し手段にそれぞれ併設されたカムレールと、これらカムレールを昇降させるカムレール駆動手段とから構成されている、請求項8に記載の搬送設備。

[10] 前記左右一対の係止具は、左右横向きに配置され且つ中間に支点を有する左右一対のシーソー運動体の外端にそれぞれ設けられ、両シーソー運動体の内端に昇降体が連動連結されると共に当該昇降体の下端に前記カム従動ローラーが軸支されている、請求項9に記載の搬送設備。

[11] 前記ハンガー係止手段は、前記ハンガーに設けられた被係止部に対し上下方向に嵌合離脱自在な係止具と、この係止具を昇降移動させる係止具位置切り換え手段と、センサーとから成り、

前記係止具は、前記被係止部を挟む前後一対の係止部を備え、この前後一対の係止部の内、被係止部を後押しする後側係止部は、一定範囲内前後移動自在に構成されると共にスプリングにより前側定位置に付勢保持され、

前記センサーは、前記後側係止部が前記スプリングに抗して後方に移動したことを検知する、請求項1に記載の搬送設備。

[図1]

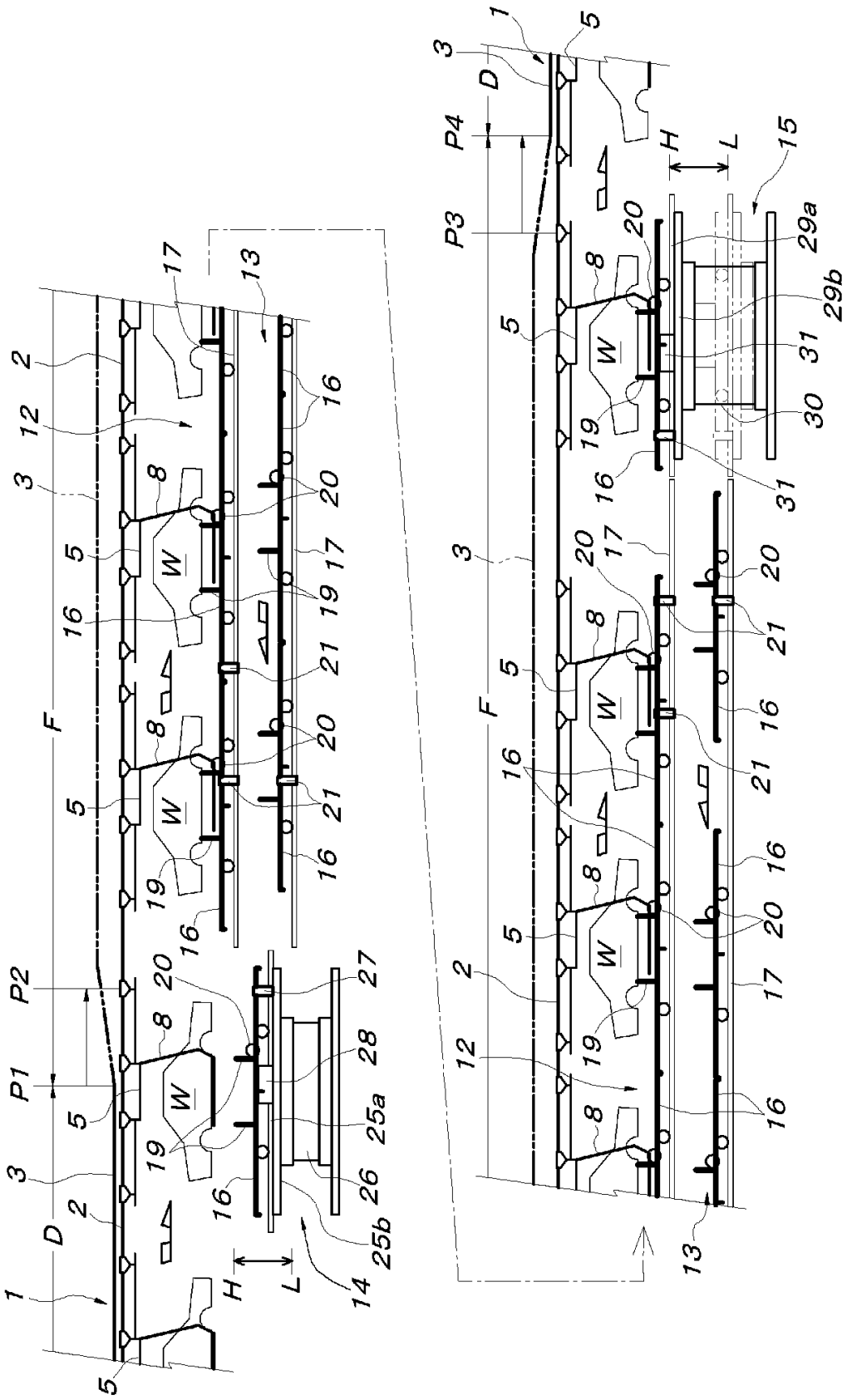
1
2
3
5
8
12
13
14
15
16
17
19
20
21
25a
25b
26
27
28
29a
29b
30
31
W
D
F
H
L
P1
P2
P3
P4

[図2]

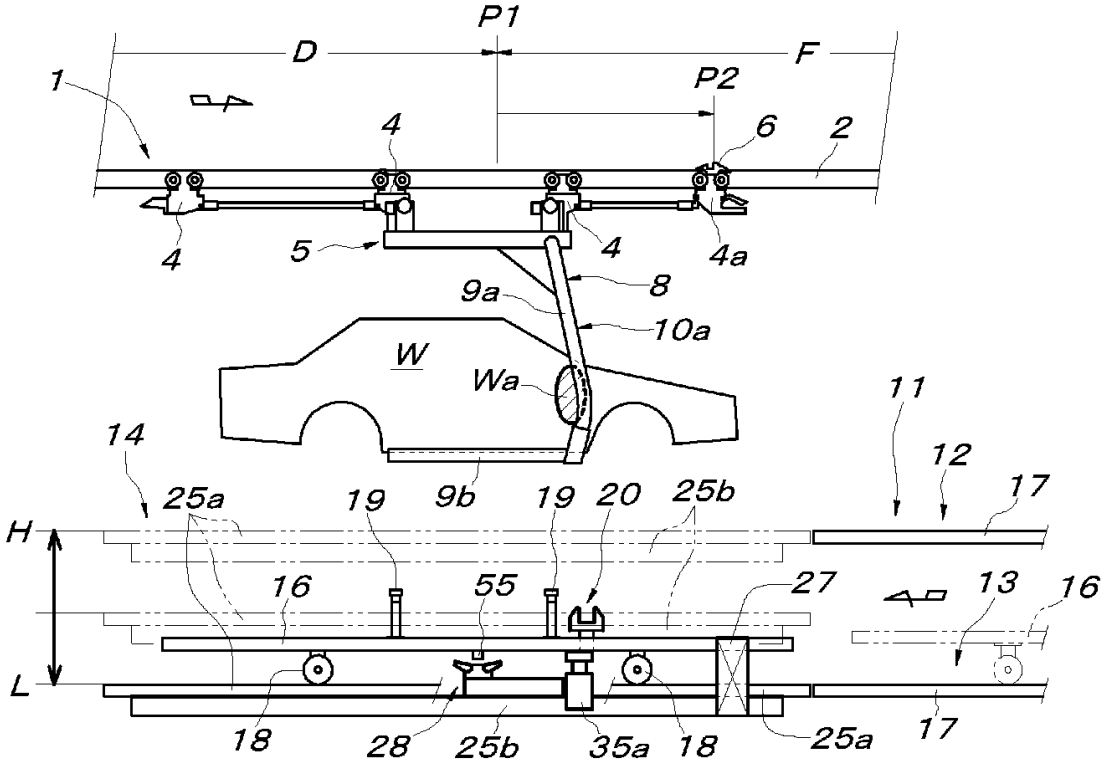
P1
D
F
1
P2
4
6
2
4
5
4
4a
9a
8
10a
W
Wa
11
14
12
25a
19
9b
19
20
25b
17
H
16
55
27
13
16
L
18
28
25b
35a
18
25a
17

[図3]

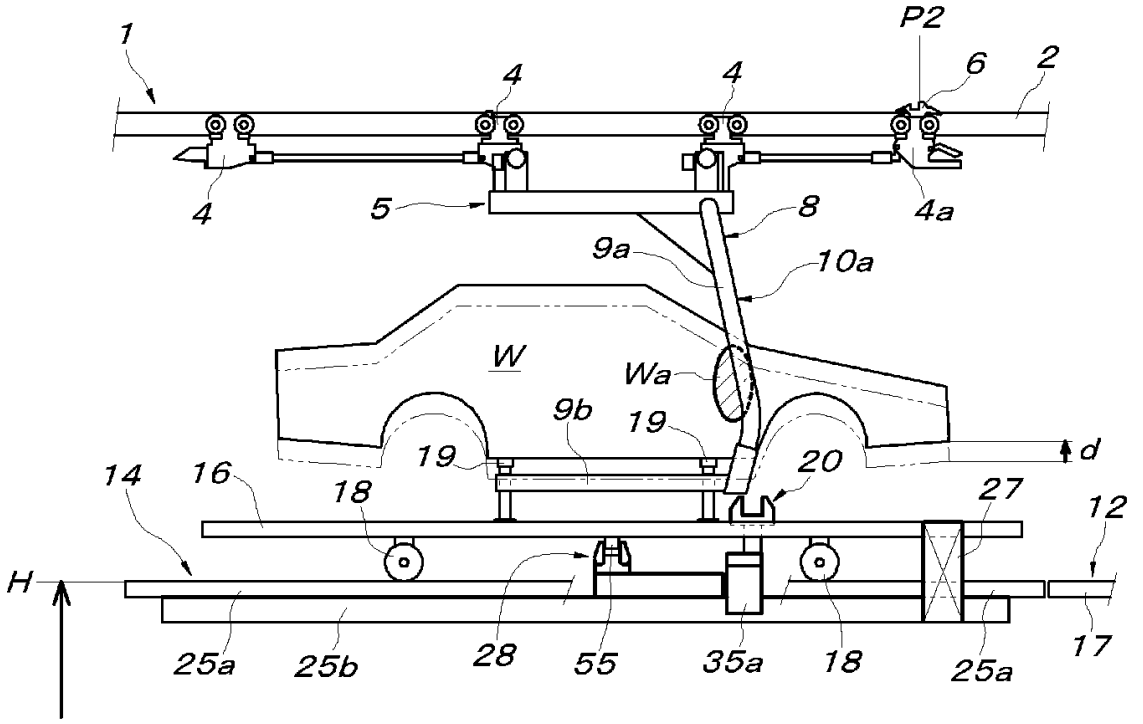
1
P2
4
4
6
2
4
5
8
4a
9a
10a
W
Wa
9b
19
19
d
14
16
18
20
27
12
H
25a
25b
28
55
35a
18
25a
17

[図4]

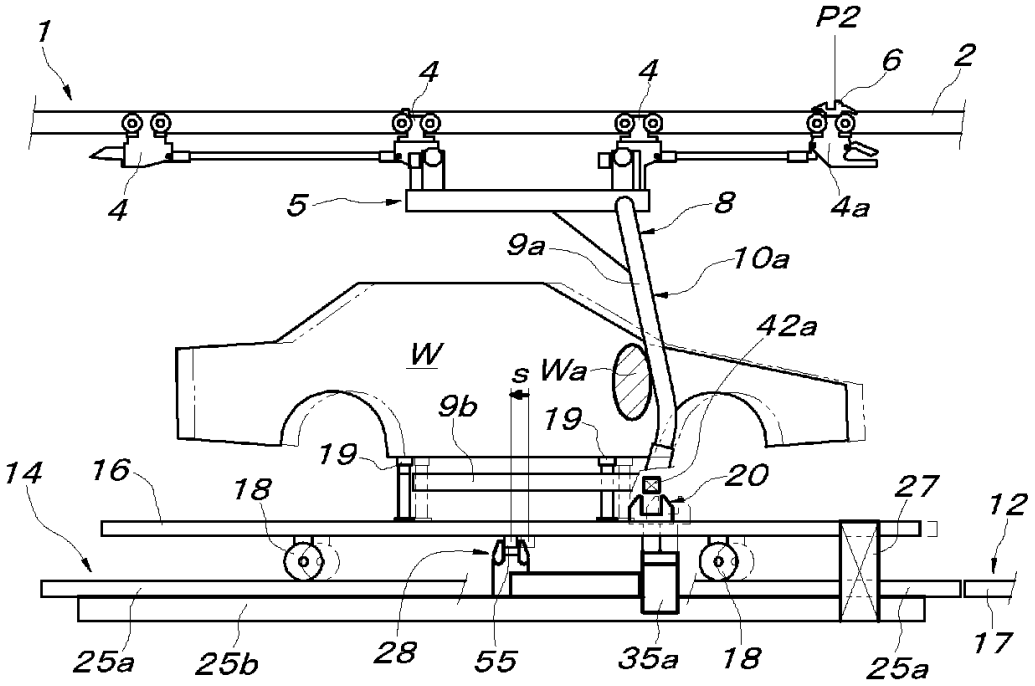
1
P2
6
2
4
4
4
5
8
4a
9a
10a
42a
W
s
Wa
9b
19
19
20
14
16
18
27
12
25a
25b
28
55
35a
18
25a
17

[図5]

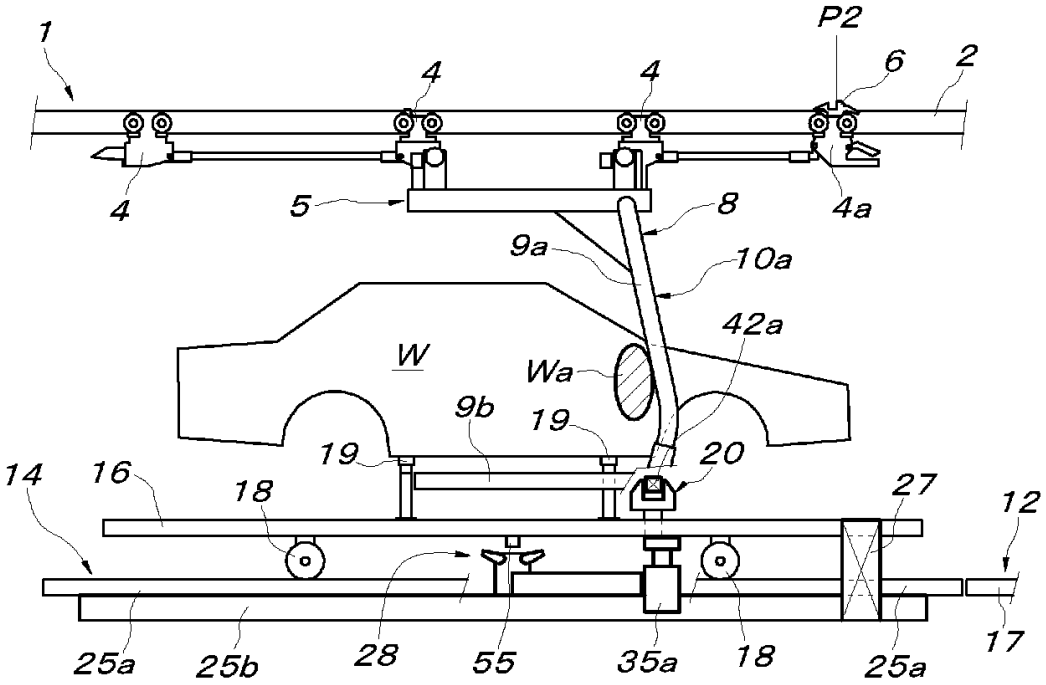
1
P2
6
2
4
4
4
5
8
4a
9a
10a
42a
W
Wa
9b
19
19
20
14
16
18
27
12
25a
25b
28
55
35a
18
25a
17

[図6]

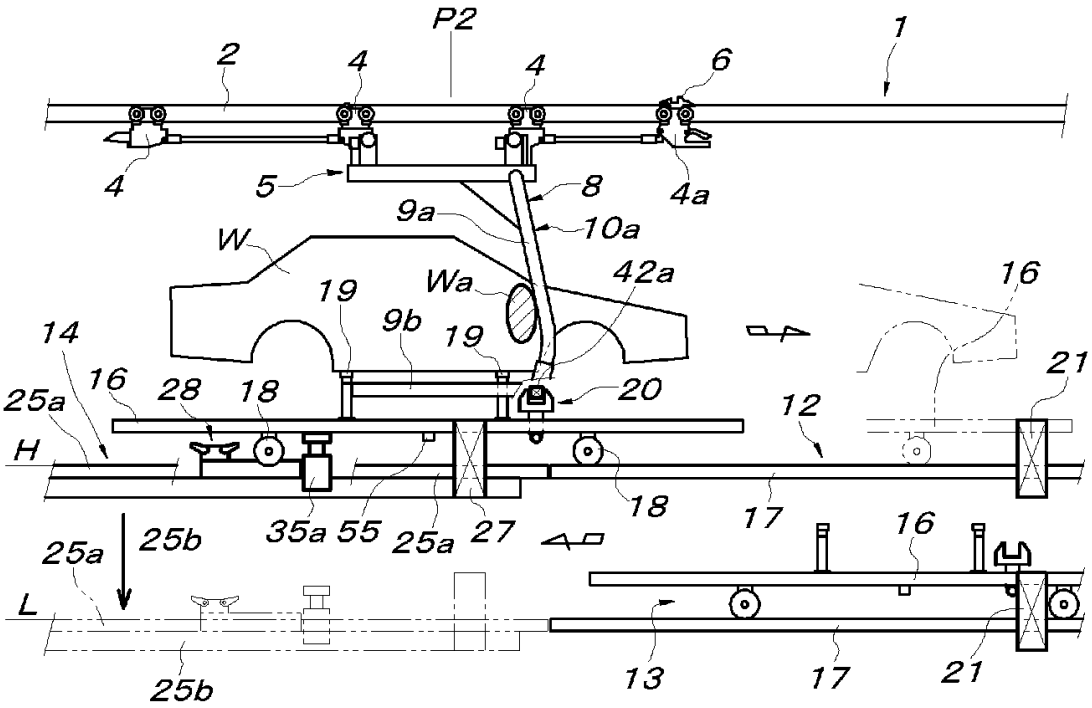
P2
1
2
4
4
6
4
5
8
4a
9a
10a
W
Wa
42a
16
19
9b
19
14
16
28
18
20
21
25a
12
H
18
35a
55
25a
27
17
16
25a
25b
L
13
17
21
25b

[図7]

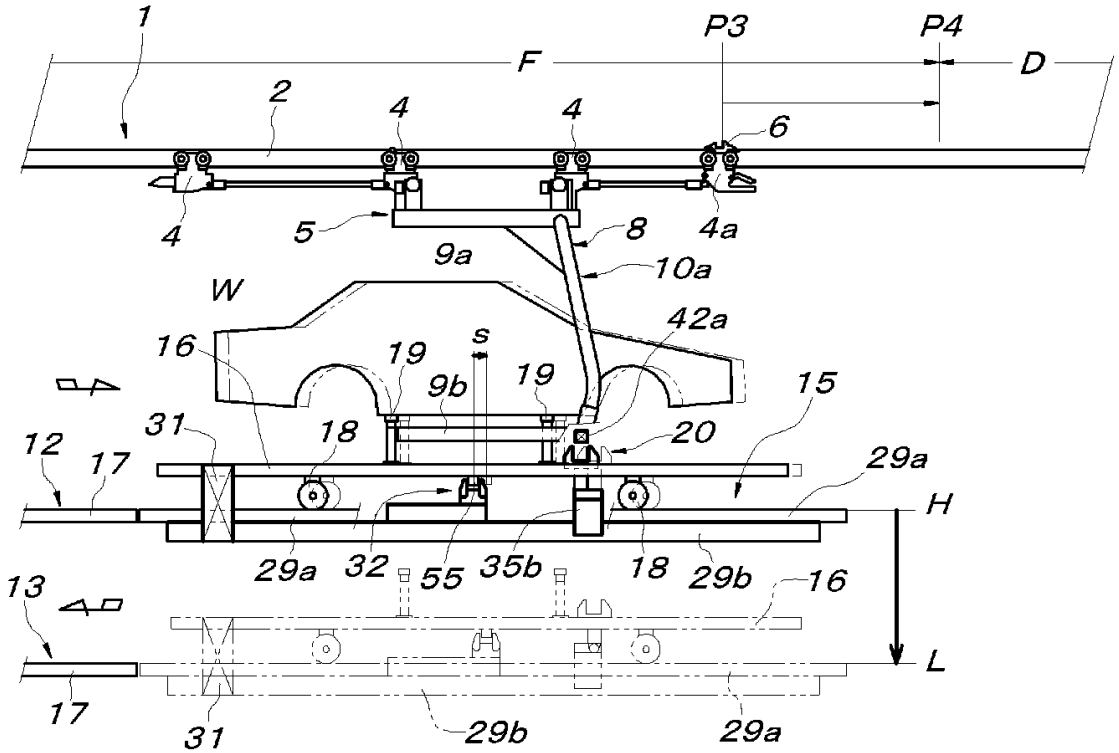
1
P3
P4
F
D
2
4
4
6
4
5
8
4a
9a
10a
W
42a
16
19
s
9b
19
15
31
18
20
12
17
29a
H
29a
32
55
35b
18
29b
16
13
L
17
31
29b
29a

[図8]

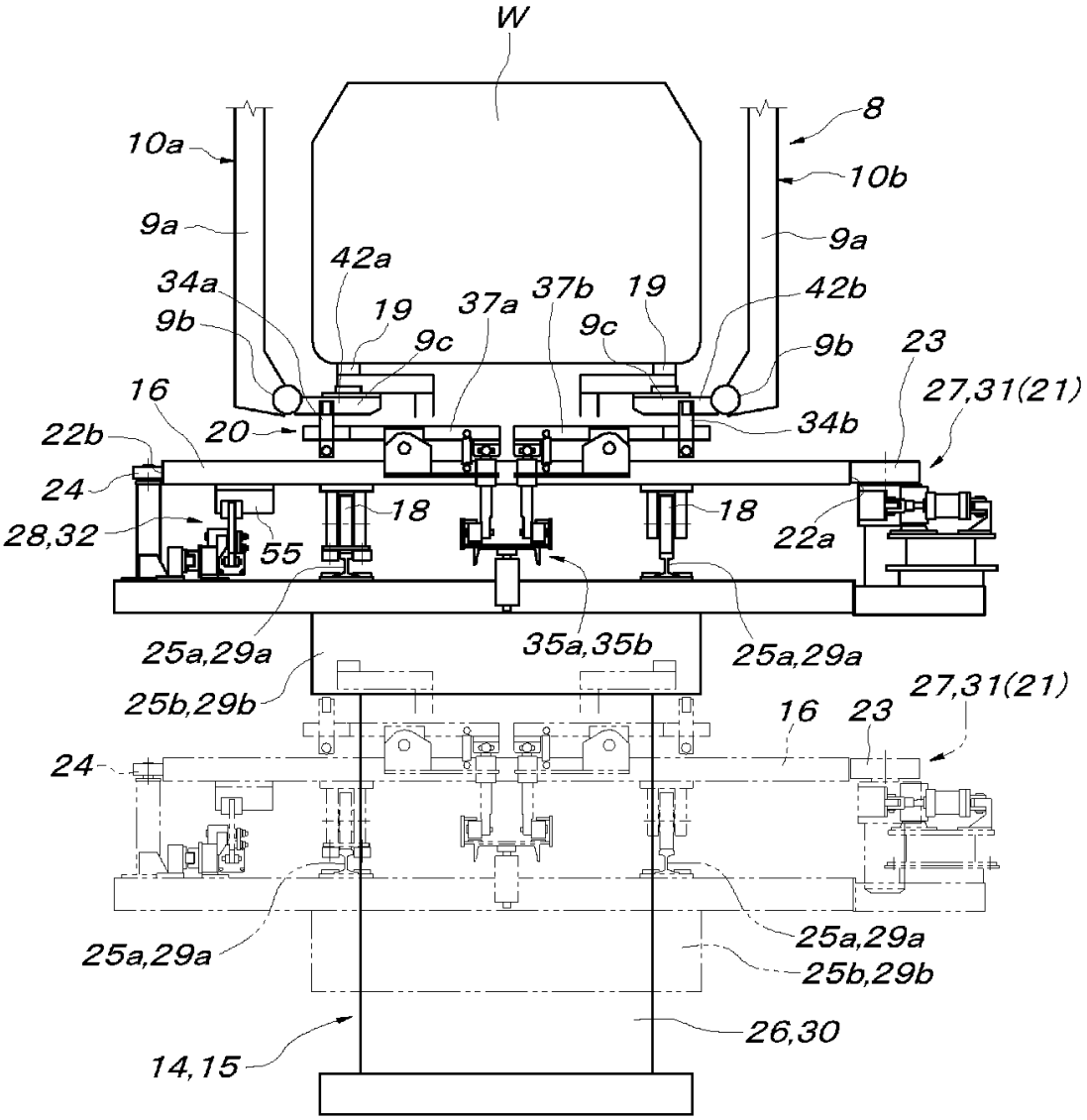
W
8
10a
10b
9a
9a
42a
34a
19
37a
37b
19
42b
9b
9c
9c
9b
23
16
27,31(21)
22b
20
34b
24
18
18
28,32
55
22a
25a,29a
35a,35b
25a,29a
25b,29b
27,31(21)
16
23
24
25a,29a
25a,29a
25b,29b
26,30
14,15

[図9]

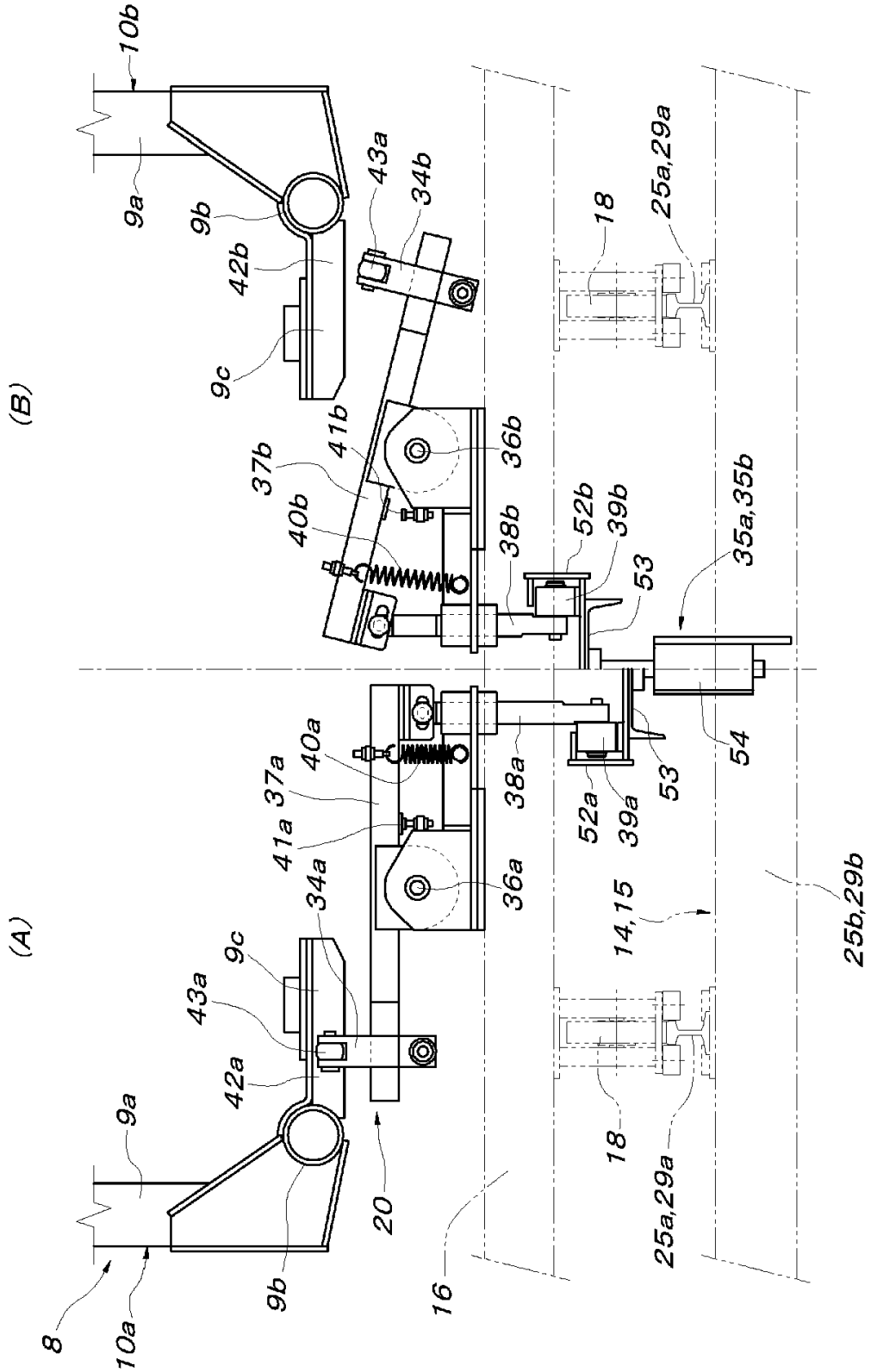
(A)
(B)
8
10a
9a
9b
9c
42a
43a
34a
20
16
37a
41a
40a
36a
38a
52a
39a
53
54
14,15
18
25a,29a
25b,29b
10b
42b
43a
34b
37b
41b
40b
36b
38b
52b
39b
35a,35b

[図10]

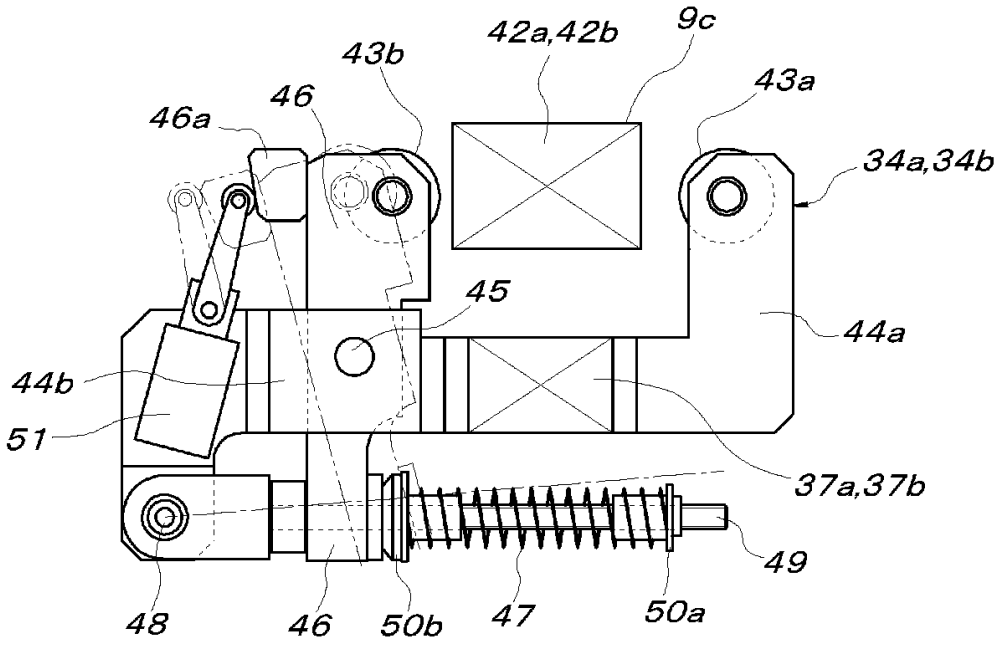
42a,42b
9c
43b
43a
46
46a
34a,34b
45
44a
44b
51
37a,37b
49
48
46
50b
47
50a

[図11]

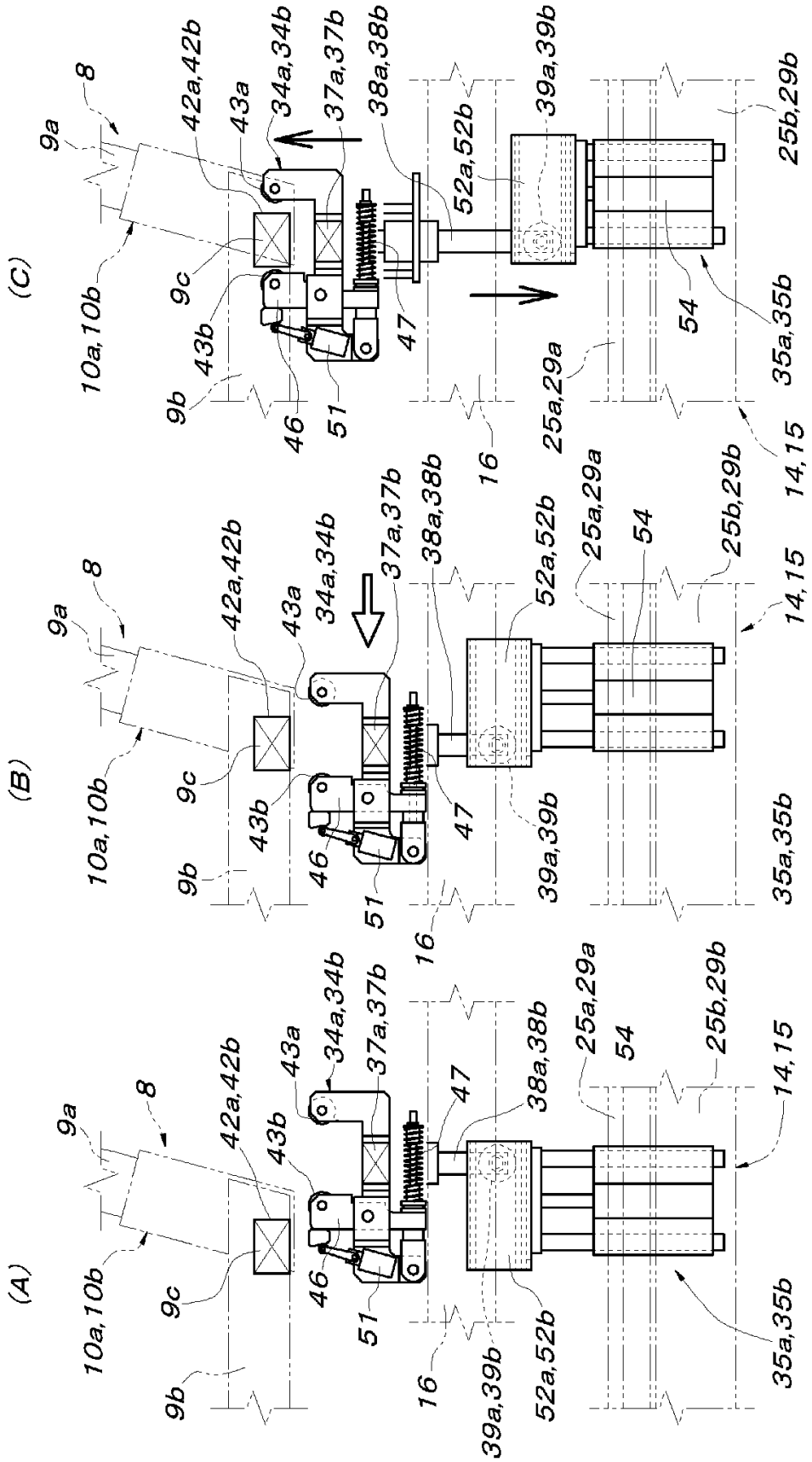
(A)
(B)
(C)
8
9a
9b
9c
10a,10b
14,15
16
25a,29a
25b,29b
34a,34b
35a,35b
37a,37b
38a,38b
39a,39b
42a,42b
43a
43b
46
47
51
52a,52b
54

[図12]

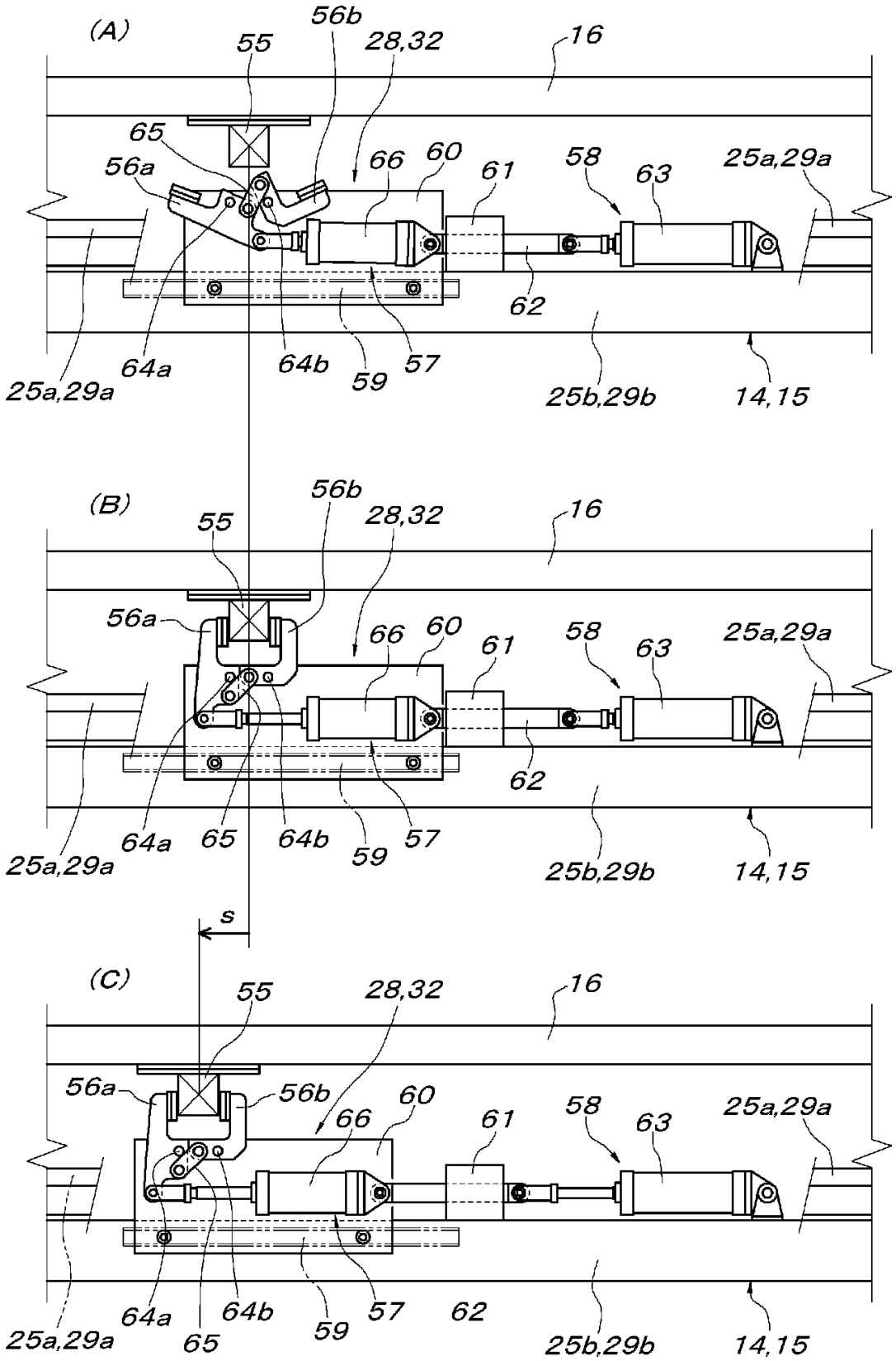
(A)
55
56b
28,32
16
65
56a
66
60
61
58
63
25a,29a
62
64a
64b
59
57
25a,29a
25b,29b
14,15
(B)
55
56b
28,32
16
56a
66
60
61
58
63
25a,29a
62
64a
65
64b
59
57
25a,29a
25b,29b
14,15
s
(C)
55
28,32
16
56a
56b
66
60
61
58
63
25a,29a
64a
64b
59
57
62
25a,29a
65
25b,29b
14,15

INTERNATIONAL SEARCH REPORT

International application No.
PCT/JP2006/314390

A. CLASSIFICATION OF SUBJECT MATTER
B61B10/02(2006.01)i, *B61B13/12*(2006.01)i, *B61J1/10*(2006.01)i, *B65G17/20*(2006.01)i

According to International Patent Classification (IPC) or to both national classification and IPC

B. FIELDS SEARCHED

Minimum documentation searched (classification system followed by classification symbols)
B61B10/00-04, B61B13/12, B61J1/10, B65G17/20, B65G35/00-08, B65G37/00

Documentation searched other than minimum documentation to the extent that such documents are included in the fields searched

Jitsuyo Shinan Koho	1922-1996	Jitsuyo Shinan Toroku Koho	1996-2006
Kokai Jitsuyo Shinan Koho	1971-2006	Toroku Jitsuyo Shinan Koho	1994-2006

Electronic data base consulted during the international search (name of data base and, where practicable, search terms used)

C. DOCUMENTS CONSIDERED TO BE RELEVANT

Category*	Citation of document, with indication, where appropriate, of the relevant passages	Relevant to claim No.
A	JP 6-115426 A (Daifuku Co., Ltd.), 26 April, 1994 (26.04.94), Par. Nos. [0026] to [0041]; Figs. 1 to 7 (Family: none)	1-11
A	JP 8-282836 A (Daifuku Co., Ltd.), 29 October, 1996 (29.10.96), Full text; all drawings (Family: none)	1-11
A	JP 2002-87346 A (Honda Motor Co., Ltd.), 27 March, 2002 (27.03.02), Full text; Figs. 1 to 3, 5 to 7 & US 6695126 B2 & GB 2373766 A & WO 2002/022433 A1 & CA 2390936 A1 & CN 1206125 C	1-11

☒ Further documents are listed in the continuation of Box C. ☐ See patent family annex.

* Special categories of cited documents:
"A" document defining the general state of the art which is not considered to be of particular relevance
"E" earlier application or patent but published on or after the international filing date
"L" document which may throw doubts on priority claim(s) or which is cited to establish the publication date of another citation or other special reason (as specified)
"O" document referring to an oral disclosure, use, exhibition or other means
"P" document published prior to the international filing date but later than the priority date claimed
"T" later document published after the international filing date or priority date and not in conflict with the application but cited to understand the principle or theory underlying the invention
"X" document of particular relevance; the claimed invention cannot be considered novel or cannot be considered to involve an inventive step when the document is taken alone
"Y" document of particular relevance; the claimed invention cannot be considered to involve an inventive step when the document is combined with one or more other such documents, such combination being obvious to a person skilled in the art
"&" document member of the same patent family

Date of the actual completion of the international search 17 October, 2006 (17.10.06)	Date of mailing of the international search report 31 October, 2006 (31.10.06)
Name and mailing address of the ISA/ Japanese Patent Office Facsimile No.	Authorized officer Telephone No.

INTERNATIONAL SEARCH REPORT

International application No.
PCT/JP2006/314390

C (Continuation). DOCUMENTS CONSIDERED TO BE RELEVANT

Category*	Citation of document, with indication, where appropriate, of the relevant passages	Relevant to claim No.
A	JP 2002-19946 A (Honda Motor Co., Ltd.), 23 January, 2002 (23.01.02), Full text; Figs. 1 to 4, 8, 9 (Family: none)	1-11

国際調査報告

国際出願番号　ＰＣＴ／ＪＰ２００６／３１４３９０

Ａ．　発明の属する分野の分類（国際特許分類（ＩＰＣ））

Int.Cl.　B61B10/02(2006.01)i, B61B13/12(2006.01)i, B61J1/10(2006.01)i, B65G17/20(2006.01)i

Ｂ．　調査を行った分野

調査を行った最小限資料（国際特許分類（ＩＰＣ））

Int.Cl.　B61B10/00-04, B61B13/12, B61J1/10, B65G17/20, B65G35/00-08, B65G37/00

最小限資料以外の資料で調査を行った分野に含まれるもの

日本国実用新案公報	１９２２－１９９６年
日本国公開実用新案公報	１９７１－２００６年
日本国実用新案登録公報	１９９６－２００６年
日本国登録実用新案公報	１９９４－２００６年

国際調査で使用した電子データベース（データベースの名称、調査に使用した用語）

Ｃ．　関連すると認められる文献

引用文献のカテゴリー＊	引用文献名　及び一部の箇所が関連するときは、その関連する箇所の表示	関連する請求の範囲の番号
A	JP 6-115426 A（株式会社ダイフク）１９９４．０４．２６，段落【００２６】－【００４１】，図１－７　（ファミリーなし）	１－１１
A	JP 8-282836 A（株式会社ダイフク）１９９６．１０．２９，全文，全図　（ファミリーなし）	１－１１
A	JP 2002-87346 A（本田技研工業株式会社）２００２．０３．２７，全文，図１－３，５－７ & US 6695126 B2 & GB 2373766 A & WO 2002/022433 A1 & CA 2390936 A1 & CN 1206125 C	１－１１

☑　Ｃ欄の続きにも文献が列挙されている。　☐　パテントファミリーに関する別紙を参照。

＊　引用文献のカテゴリー
「Ａ」特に関連のある文献ではなく、一般的技術水準を示すもの
「Ｅ」国際出願日前の出願または特許であるが、国際出願日以後に公表されたもの
「Ｌ」優先権主張に疑義を提起する文献又は他の文献の発行日若しくは他の特別な理由を確立するために引用する文献（理由を付す）
「Ｏ」口頭による開示、使用、展示等に言及する文献
「Ｐ」国際出願日前で、かつ優先権の主張の基礎となる出願の日の後に公表された文献
「Ｔ」国際出願日又は優先日後に公表された文献であって出願と矛盾するものではなく、発明の原理又は理論の理解のために引用するもの
「Ｘ」特に関連のある文献であって、当該文献のみで発明の新規性又は進歩性がないと考えられるもの
「Ｙ」特に関連のある文献であって、当該文献と他の１以上の文献との、当業者にとって自明である組合せによって進歩性がないと考えられるもの
「&」同一パテントファミリー文献

国際調査を完了した日	国際調査報告の発送日
１７．１０．２００６	３１．１０．２００６

国際調査機関の名称及びあて先	特許庁審査官（権限のある職員）	３Ｄ	３４２０
日本国特許庁（ＩＳＡ／ＪＰ） 郵便番号１００－８９１５ 東京都千代田区霞が関三丁目４番３号	落合　弘之 電話番号　０３－３５８１－１１０１　内線　３３４１		

Ｃ（続き）．　関連すると認められる文献

引用文献のカテゴリー＊	引用文献名　及び一部の箇所が関連するときは、その関連する箇所の表示	関連する請求の範囲の番号
A	JP 2002-19946 A（本田技研工業株式会社）２００２．０１．２３，全文，図１－４，８，９　（ファミリーなし）	１－１１

(12) 特許協力条約に基づいて公開された国際出願

(19) 世界知的所有権機関
国際事務局

(43) 国際公開日
2007年2月1日 (01.02.2007)

PCT

(10) 国際公開番号
WO 2007/013348 A1

(51) 国際特許分類:
B61B 10/02 (2006.01) *B61J 1/10* (2006.01)
B61B 13/12 (2006.01) *B65G 17/20* (2006.01)

(21) 国際出願番号: PCT/JP2006/314390

(22) 国際出願日: 2006年7月20日 (20.07.2006)

(25) 国際出願の言語: 日本語

(26) 国際公開の言語: 日本語

(30) 優先権データ:
特願2005-213748 2005年7月25日 (25.07.2005) JP

(71) 出願人 (米国を除く全ての指定国について): 株式会社ダイフク (DAIFUKU CO., LTD.) [JP/JP]; 〒5500012 大阪府大阪市西淀川区御幣島３丁目２番１１号 Osaka (JP).

(72) 発明者; および
(75) 発明者/出願人 (米国についてのみ): 中村 次郎 (NAKAMURA, Jiro) [JP/JP]; 〒5500012 大阪府大阪市西淀川区御幣島３丁目２番１１号 株式会社エイ・ピー・エス内 Osaka (JP).

(74) 代理人: 藤川 忠司 (FUJIKAWA, Tadashi); 〒6600807 兵庫県尼崎市長洲西通１丁目１番２２号 Hyogo (JP).

(81) 指定国 (表示のない限り、全ての種類の国内保護が可能): AE, AG, AL, AM, AT, AU, AZ, BA, BB, BG, BR, BW, BY, BZ, CA, CH, CN, CO, CR, CU, CZ, DE, DK, DM, DZ, EC, EE, EG, ES, FI, GB, GD, GE, GH, GM, HN, HR, HU, ID, IL, IN, IS, KE, KG, KM, KN, KP, KR, KZ, LA, LC, LK, LR, LS, LT, LU, LV, LY, MA, MD, MG, MK, MN, MW, MX, MZ, NA, NG, NI, NO, NZ, OM, PG, PH, PL, PT, RO, RS, RU, SC, SD, SE, SG, SK, SL, SM, SY, TJ, TM, TN, TR, TT, TZ, UA, UG, US, UZ, VC, VN, ZA, ZM, ZW.

(84) 指定国 (表示のない限り、全ての種類の広域保護が可能): ARIPO (BW, GH, GM, KE, LS, MW, MZ, NA, SD, SL, SZ, TZ, UG, ZM, ZW), ユーラシア (AM, AZ, BY, KG, KZ, MD, RU, TJ, TM), ヨーロッパ (AT, BE, BG, CH, CY, CZ, DE, DK, EE, ES, FI, FR, GB, GR, HU, IE, IS, IT, LT, LU, LV, MC, NL, PL, PT, RO, SE, SI, SK, TR), OAPI (BF, BJ, CF, CG, CI, CM, GA, GN, GQ, GW, ML, MR, NE, SN, TD, TG).

[続葉有]

(54) Title: DELIVERY FACILITY FOR TRAVELING BODY FOR TRANSPORTATION

(54) 発明の名称: 搬送用走行体の配送設備

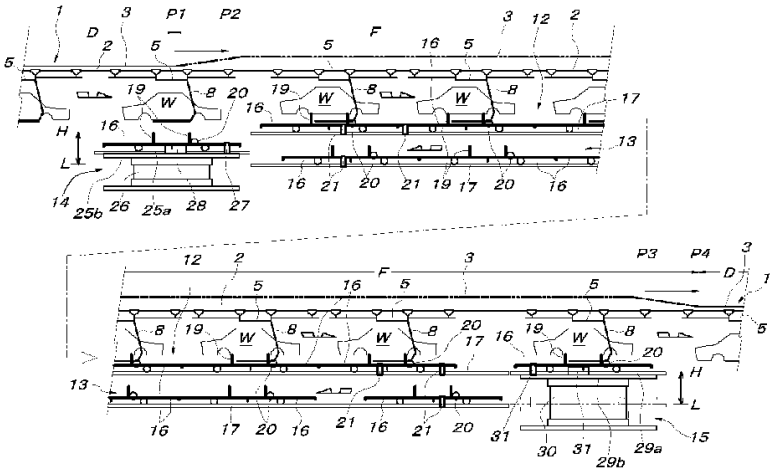

(57) Abstract: A transportation facility in which an object transported while being suspended from a hanger such as a trolley conveyor is transferred on to a carriage of a carriage-type transportation device only for a certain section of a route. At the start point of transportation of the carriage-type transportation device, there is provided an object receiving means (14) at the under side of a traveling route of a traveling body (5) of the conveyor (1). An object support device (19) of the carriage (16) is lifted relative to the hanger (8) of the traveling body, and the object receiving means (14) is caused to receive the object (W) from the hanger. At the end of the transportation is provided an object return means (15) for lowering the object support device relative to the hanger of the traveling body to transfer the object to the hanger. In the transportation route (12) of the carriage-type transportation device, the traveling body is switched to a state in which drive is released and a hanger engagement means (20) of the carriage is engaged with the hanger so that the traveling body can be pulled and moved by the carriage.

[続葉有]

WO 2007/013348 A1

添付公開書類:
— 国際調査報告書

２文字コード及び他の略語については、定期発行される各*PCT*ガゼットの巻頭に掲載されている「コードと略語のガイダンスノート」を参照。

(57) 要約:

トロリーコンベヤなどのハンガーによって吊り下げ搬送される被搬送物を、当該被搬送物に対する作業などのために一定区間だけ台車式搬送装置の台車上に移し換えて搬送できる搬送設備を提供するものであって、トロリーコンベヤ（１）の走行体（５）の走行経路の下側に配設された台車式搬送装置の搬送開始端に、台車（１６）の被搬送物支持具（１９）を走行体のハンガー（８）に対して相対的に上げて当該ハンガーから被搬送物（W）を受け取らせる被搬送物受取手段（１４）が設けられ、搬送終了端には、前記被搬送物支持具を走行体のハンガーに対して相対的に下げて当該ハンガーに被搬送物を移載する被搬送物戻し手段（１５）を備えた搬送設備であって、台車式搬送装置の搬送経路（１２）では、走行体が駆動解除状態に切り換えられると共に台車のハンガー係止手段（２０）がハンガーを係止して当該走行体を台車が牽引移動させるようにした。

明 細 書

搬送用走行体の配送設備

技術分野

[0001] 本発明は、トロリーコンベヤや自走電車に設けられたハンガーによって吊り下げ搬送される被搬送物を一定区間だけ台車式搬送装置の台車上に移し換えて搬送する搬送設備に関するものである。

背景技術

[0002] 例えば自動車の組立ラインでは、トロリーコンベヤの走行体や自走電車に設けられたハンガーで吊り下げ搬送される車体にエンジンやドアーなどを組み付ける作業が行われるが、この場合、ハンガーで支持された車体に対する部品組み付け作業を台車式搬送装置の台車上で行うことが知られている。このような場合に使用できる搬送設備としては、例えば特許文献1に記載されるように、車体を支持するハンガーを備えた走行体(プッシャーで駆動されるトロリーコンベヤの走行体)を床側の搬送装置と同期させて走行させ、床側の搬送装置上から前記ハンガーで吊り下げ搬送される車体に対する部品組み付け作業などを行うように構成された搬送設備や、特許文献2に記載された搬送設備のように、ハンガーで吊り下げ搬送される被搬送物を、当該ハンガーを備えたトロリーコンベヤの走行体や自走電車と同期走行する台車式搬送装置の台車上に移し替え、当該台車上での作業終了後に再び台車上の車体をハンガーに戻すように構成された搬送設備が知られている。

特許文献1:特公平4－5581号公報

特許文献2:特開平7－157073号公報

発明の開示

発明が解決しようとする課題

[0003] しかしながら、上記のような従来周知の搬送設備では、作業完了までの間、車体などの被搬送物を吊り下げ搬送する被搬送物吊下式搬送装置(トロリーコンベヤの走行体や自走電車)と作業者が搭乗して作業を行う台車式搬送装置(台車)とを同期運転する必要があり、両搬送装置の制御に高度の技術を必要とするばかりでなく、特許

文献1に記載されたような搬送設備を使用するときは、被搬送物を吊り下げるハンガーが邪魔になるような場所に対する部品組み付け作業が行えない。

課題を解決するための手段

[0004] 本発明は上記のような従来の問題点を解消し得る搬送設備を提供することを目的とするものであって、請求項1に記載の本発明に係る搬送設備は、後述する実施形態の参照符号を括弧付きで付して示すと、被搬送物吊下式搬送装置（P＆F形式のトロリーコンベヤ(1)）と、台車式搬送装置(11)と、被搬送物受取手段(14)と、被搬送物戻し手段(15)とを備えた搬送設備であって、前記被搬送物吊下式搬送装置（P＆F形式のトロリーコンベヤ(1)）は、被搬送物支持用ハンガー(8)が設けられた走行体(5)を備えると共に、この走行体(5)の走行経路中には、当該走行体(5)を強制走行させる駆動区間(D)と、当該走行体(5)を移動自由な状態とする駆動解除区間(F)とが設けられ、前記台車式搬送装置(11)は、前記走行体(5)の走行経路の駆動解除区間(F)の下側で当該走行経路に沿って走行可能な台車(16)を備えると共に、当該台車(16)上には被搬送物支持具(19)が設けられ、前記被搬送物受取手段(14)は、前記台車式搬送装置(11)の搬送開始端において前記被搬送物支持具(19)を前記走行体(5)のハンガー(8)に対して相対的に上げて当該ハンガー(8)から被搬送物(W)を前記被搬送物支持具(19)に移載する手段であり、前記被搬送物戻し手段(15)は、前記台車式搬送装置(11)の搬送終了端において前記被搬送物支持具(19)を前記走行体(5)のハンガー(8)に対して相対的に下げて当該被搬送物支持具(19)からハンガー(8)に被搬送物(W)を移載する手段である搬送設備において、

前記被搬送物吊下式搬送装置（P＆F形式のトロリーコンベヤ(1)）の走行体(5)の被搬送物支持用ハンガー(8)には、被係止部(42a)が設けられ、前記台車式搬送装置(11)の台車(16)には、前記ハンガー(8)の被係止部(42a)に対し係脱自在なハンガー係止手段(20)が設けられ、前記台車式搬送装置(11)の搬送経路(12)では、前記ハンガー係止手段(20)が前記ハンガー(8)の被係止部(42a)と係合し、駆動解除状態に切り換えられている前記被搬送物吊下式搬送装置（P＆F形式のトロリーコンベヤ(1)）の走行体(5)を前記台車(16)が前記ハンガー(8)を介して牽引移動させる構成となっている。

[0005] 上記構成の本発明を実施するについて、前記被搬送物吊下式搬送装置は、走行用駆動手段を備えているが特定区間では自由に前後に遊動させることができる駆動解除状態とすることができる自走電車に被搬送物支持用ハンガー(8)を吊り下げたものでも良いが、請求項2に記載のように、前記被搬送物吊下式搬送装置は、その走行体(5)の走行経路に沿って移動するプッシャーで当該走行体(5)を推進させるトロリーコンベヤ(1)により構成し、前記駆動解除区間(F)では、前記トロリーコンベヤ(1)の走行体(5)がプッシャーから切り離されて駆動解除状態に切り換えられるように構成することができる。

[0006] 前記被搬送物受取手段(14)及び被搬送物戻し手段(15)は、台車(16)に対して被搬送物支持具(19)を昇降させる構成によって実現することもできるが、請求項3に記載のように、台車(15)自体を昇降させる昇降ガイドレール(25a,29a)によって構成することができる。

[0007] ハンガー(8)から台車(16)上(被搬送物支持具(19)上)に移載された被搬送物(W)に対する部品組み込み作業などの作業部位(Wa)がハンガー(8)と重なるような場合、即ち、被搬送物(W)から切り離されたハンガー(8)が作業の邪魔になるような場合は、当該ハンガー(8)と台車(16)上の被搬送物(W)とを前後方向に所定距離だけ相対移動させれば良いが、この場合、請求項4に記載のように、前記ハンガー係止手段(20)を、前記台車式搬送装置(11)の搬送開始端においてハンガー(8)から被搬送物(W)を受け取った被搬送物支持具(19)と当該ハンガー(8)とが相対的に一定距離前後方向に移動したときにハンガー(8)側の被係止部(42a)に対応する位置に設け、前記台車式搬送装置(11)の搬送終了端においては、被搬送物(W)を支持する被搬送物支持具(19)とハンガー(8)とを元の前後方向相対位置に戻した後、前記被搬送物戻し手段(15)を動作させるように構成すれば良い。この場合の前記台車式搬送装置(11)の搬送開始端及び搬送終了端における被搬送物支持具(19)とハンガー(8)との相対的前後方向移動は、例えば、請求項5に記載のように台車(16)そのものを前後方向に移動させることによって実現できるが、その他、台車(16)に対して当該台車(16)上の被搬送物支持具(19)を前後方向に移動させる方法や、定位置にある台車(16)に対してハンガー(8)(当該ハンガー(8)を備えたトロリーコンベヤ(1)の走行体(5)や当該ハンガー(8)を

備えた自走電車など)を前後方向に移動させる方法によっても実現できる。

[0008] 前記台車式搬送装置(11)は、先に説明したように自走可能な電車を利用したものであっても良いが、自走できない台車(16)を台車走行経路側に配設された台車駆動手段(摩擦駆動手段(21))により推進させる構成のものである場合は、請求項6に記載のように、前記被搬送物受取手段(14)には、台車(16)を搬送経路(12)側へ送り出す台車送り出し手段(台車引き込み送り出し手段(27))と、支持する台車(16)を、前記ハンガー係止手段(20)がハンガー(8)の被係止部(42a)に対応する位置まで前後方向に移動させる台車用フィーダー(28)とを設け、前記被搬送物戻し手段(15)には、搬送経路(12)から送り込まれる台車(16)を所定位置まで引き込む台車引き込み手段(台車引き込み送り出し手段(31))と、支持する被搬送物(W)とハンガー(8)とが元の前後方向相対位置に戻るように台車(16)を前後方向に復帰移動させる台車用フィーダー(32)とを設けることができる。この場合、請求項7に記載のように、前記台車用フィーダー(28,32)は、台車(16)に設けられた被把持部(55)を前後から挟持する前後一対の開閉挟持片(56a,56b)と、この開閉挟持片(56a,56b)の開閉用駆動手段(57)と、前記開閉挟持片(56a,56b)を前後方向に往復移動させる移動用駆動手段(58)とから構成することができる。

[0009] 前記被搬送物吊下式搬送装置(トロリーコンベヤ(1))のハンガーは、当該ハンガー(8)が支持する被搬送物(W)を台車(16)側の被搬送物支持具(19)で下から受け取らせることができる構成のものであれば、如何なる構成のものでも良いが、自動車組立ラインなどで使用される車体支持用ハンガーとして一般的なハンガー、即ち、左右横方向に開閉する左右一対のハンガーアーム(10a,10b)を備えたものであるときは、請求項8に記載のように、前記ハンガー係止手段(20)は、左右各ハンガーアーム(10a,10b)に設けられた被係止部(42a,42b)に対し係脱自在な左右一対の係止具(34a,34b)と、この左右一対の係止具(34a,34b)を連動させて係脱動作させる1つの係止具位置切り換え手段(35a)又は(35b)とから構成することができる。この場合、請求項9に記載のように、前記左右一対の係止具(34a,34b)は、スプリング(40a,40b)により被係止部(42a,42b)に係合する上位置に付勢保持させると共に、各係止具(34a,34b)それぞれに連動昇降するカム従動ローラー(39a,39b)を台車(16)側に設け、前記係止具位置切り換え

手段(35a)又は(35b)は前記被搬送物受取手段(14)及び被搬送物戻し手段(15)の位置に台車(16)があるときに当該台車(16)側の前記カム従動ローラー(39a,39b)と係合するように前記被搬送物受取手段(14)及び被搬送物戻し手段(15)にそれぞれ併設されたカムレール(52a,52b)と、これらカムレール(52a,52b)を昇降させるカムレール駆動手段(シリンダーユニット(54))とから構成することができる。更にこの場合、請求項10に記載のように、前記左右一対の係止具(34a,34b)は、左右横向きに配置され且つ中間に支点を有する左右一対のシーソー運動体(37a,37b)の外端にそれぞれ設け、両シーソー運動体(37a,37b)の内端に昇降体(38a,38b)を連動連結すると共に当該昇降体(38a,38b)の下端に前記カム従動ローラー(39a,39b)を軸支することができる。

[0010] 又、前記ハンガー係止手段(20)を、前記ハンガー(8)に設けられた被係止部(42a)に対し上下方向に嵌合離脱自在な係止具(34a)と、この係止具(34a)を昇降移動させる係止具位置切り換え手段(35a)又は(35b)とから構成する場合、請求項11に記載のように、前記係止具(34a)は、前記被係止部(42a)を挟む前後一対の係止部(43a,43b)を備えたものとし、この前後一対の係止部(43a,43b)の内、被係止部(42a)を後押しする後側係止部(43b)は、一定範囲内前後移動自在に構成すると共にスプリング(47)により前側定位置に付勢保持させ、当該後側係止部(43b)が前記スプリング(47)に抗して後方に移動したことを検知するためのセンサー(51)を併設することができる。

発明の効果

[0011] 上記請求項1に記載の本発明に係る搬送設備によれば、被搬送物吊下式搬送装置の被搬送物支持用ハンガーによって吊り下げ搬送している被搬送物に対し部品組み付け作業などを行う区間の床側に台車式搬送装置を設置し、この台車式搬送装置の搬送開始端に対応する定位置で被搬送物吊下式搬送装置の走行体(ハンガー)を停止させた状態で当該搬送開始端に配設された被搬送物受取手段を動作させることにより、前記ハンガーに支持されていた被搬送物を前記台車式搬送装置の台車上に乗り移らせ、台車式搬送装置の搬送終了端までは前記台車の被搬送物支持具で支持させた状態で被搬送物を搬送させることができるので、当該被搬送物に対する部品組み付け作業などを前記台車上で容易に行うことができるのであるが、このとき、被搬送物をそれまで支持していた空のハンガーは前記台車が備えるハンガ

一係止手段で当該台車と一体化させ、台車の走行により空のハンガーを介して被搬送物吊下式搬送装置の走行体(ハンガー)を牽引走行させることができる。従って、被搬送物を台車側に移載している間、被搬送物吊下式搬送装置の走行体(ハンガー)を台車と同期させて前進走行させるための手段や制御が全く不要になり、搬送設備全体の構成を簡略化して大幅なコストダウンを図ることができる。

[0012] 勿論、台車式搬送装置の搬送終了端まで台車によって搬送した被搬送物は、当該搬送終了端で被搬送物戻し手段の動作により台車に牽引されてきた被搬送物吊下式搬送装置の走行体(ハンガー)側に戻し、以降はこの被搬送物吊下式搬送装置の走行体(ハンガー)によって吊り下げ搬送させることができるのであるが、このときも被搬送物を台車側から受け取る被搬送物吊下式搬送装置の走行体(ハンガー)は当該台車とハンガー係止手段で一体化されていたのであるから、両者間の被搬送物の移載が安全確実に行えるように、台車とは切り離されて走行していた被搬送物受取側の走行体(ハンガー)を台車側に対して位置合わせする必要がなく、台車式搬送装置の搬送終了端での当該台車式搬送装置から被搬送物吊下式搬送装置への安全確実な被搬送物の戻し作業も容易に行わせることができる。

[0013] 尚、請求項2に記載の構成によれば、走行体走行体の走行経路に沿って移動するプッシャーで当該走行体を推進させるトロリーコンベヤを被搬送物吊下式搬送装置に活用して、本発明の搬送設備を容易に実施することができる。又、請求項3に記載の構成によれば、被搬送物受取手段及び被搬送物戻し手段を、台車に対して被搬送物支持具を昇降させる構成によって実現する場合よりも、数多く必要な台車の構成がシンプルになり、本発明の搬送設備を容易且つ安価に実施することができるばかりでなく、台車式搬送装置の台車による搬送経路の下側を空台車の戻し経路に構成した場合に必要な、台車式搬送装置の搬送開始端及び搬送終了端に必要な台車昇降手段(昇降ガイドレール)で前記被搬送物受取手段及び被搬送物戻し手段を兼ねさせることができる。

[0014] 又、台車式搬送装置の台車上に被搬送物を移載した後の空になったハンガーをそのままの位置で台車にハンガー係止手段で一体化したのでは、当該被搬送物に対する部品組み込み作業などの作業対象箇所が空になったハンガーと重なって作業

の邪魔になるような場合には、請求項4に記載の構成を採用することにより、当該被搬送物の作業対象箇所を空になったハンガーから前後方向に離して、空になったハンガーに邪魔されることなく当該被搬送物の作業対象箇所に対する作業を容易に行うことができる。この場合、請求項5に記載の構成によれば、請求項4に記載の構成を簡単容易に実施することができる。

[0015] 前記台車式搬送装置が、自走できない台車を台車走行経路側に配設された台車駆動手段により推進させる構成のものである場合は、請求項6や請求項7に記載の構成を採用することにより、請求項5に記載の構成を含めて本発明を簡単容易に実施することができる。

[0016] 前記被搬送物吊下式搬送装置のハンガーが、自動車組立ラインなどで使用される車体支持用ハンガーとして一般的なハンガー、即ち、左右横方向に開閉する左右一対のハンガーアームを備えたものであるときは、請求項8に記載の構成を採用することにより、左右一対のハンガーアームの何れか片側のハンガーアームのみを台車側にハンガー係止手段で係止一体化させる場合よりも、ハンガーを介して被搬送物吊下式搬送装置の走行体を台車で牽引させる作用を無理なく確実に行わせることができる。しかも、左右一対のハンガーアームを各別に係止する左右一対の係止具を1つの係止具位置切り換え手段により係止作用位置と係止解除位置とに切り換えることができるので、各係止具ごとに係止具位置切り換え手段を設ける場合よりも制御が簡単になる。

[0017] 上記の請求項8に記載の構成を採用する場合、請求項9に記載のように実施することにより、台車式搬送装置の台車による搬送経路の全域にわたって前記左右一対の係止具を位置切り換え手段で係止作用位置に保持する必要がなく、前記左右一対の係止具を係止作用位置に切り換えたり係止解除位置に切り換えたりするための手段として、前記被搬送物受取手段及び被搬送物戻し手段の位置にのみカムレールと当該カムレールを昇降させるカムレール駆動手段とを配設しておくだけで良いので、台車側に前記左右一対の係止具を位置切り換えのための駆動源を設けなければならない場合よりも、容易且つ安価に本発明を実施することができる。更にこの場合、請求項10に記載の構成によれば、前記左右一対の係止具はハンガーの左右一対

のハンガーアームに対応させて台車の左右両側に配設しながら、両係止具に連動する左右一対の昇降するカム従動ローラーは台車の左右巾方向の中央側に寄せて配設することができ、前記被搬送物受取手段及び被搬送物戻し手段の位置に各カム従動ローラーに対応して配設される左右一対のカムレールを一体化し、1つのカムレール駆動手段で一体に昇降駆動することが容易になる。

[0018] 又、請求項11に記載の構成によれば、ハンガー係止手段で台車に係止一体化したハンガーを介して被搬送物吊下式搬送装置の走行体を台車で牽引している状況において、被搬送物吊下式搬送装置の走行体が何らかの原因で円滑な走行が行えない事態に陥り、台車に対してハンガー側が大きな抵抗になった場合、センサーで係る事態を速やかに検知させることができるので、当該センサーの検知信号に基づいて台車の推進駆動に非常停止をかけるなど、必要な対策を自動的にとらせることが容易に行える。

図面の簡単な説明

[0019] [図1]本発明の搬送設備の全体の構成を説明する概略側面図である。

[図2]被搬送物受取手段で吊下搬送されてきた被搬送物を受け取る直前の状態を説明する側面図である。

[図3]図2の状態から1段階進んだ状態を説明する側面図である。

[図4]図3の状態から1段階進んだ状態を説明する側面図である。

[図5]図4の状態から1段階進んだ状態を説明する側面図である。

[図6]被搬送物受取手段から台車式搬送装置の搬送経路へ台車が送り出されるときの状態を説明する側面図である。

[図7]被搬送物戻し手段での作用を説明する側面図である。

[図8]被搬送物受取手段及び被搬送物戻し手段の構成を説明する正面図である。

[図9]ハンガー係止手段の構成を説明する図で、A図は係止作用状態にあるハンガー係止手段を示す正面図、B図は係止解除状態にあるハンガー係止手段を示す正面図である。

[図10]ハンガー係止手段の係止具の具体的構成を説明する側面図である。

[図11]A図～C図はハンガー係止手段の各段階での状態を説明する側面図である。

[図12]A図～C図は台車用フィーダーの各段階での状態を説明する側面図である。

符号の説明

[0020] 1　パワー＆フリー形式のトロリーコンベヤ(被搬送物吊下式搬送装置)

2　フリーライン

3　パワーライン

4, 4a　トロリー

5　走行体

6　被動用ドッグ

8　被搬送物支持用ハンガー

9c　ハンガーアームの被搬送物支持部

10a, 10b　左右一対のハンガーアーム

11　台車式搬送装置

12　搬送経路

13　台車戻り経路

14　被搬送物受取手段

15　被搬送物戻し手段

16　台車

19　被搬送物支持具

20　ハンガー係止手段

21　摩擦駆動手段

22a, 22b　左右一対の帯状垂直摩擦面

23　モーター駆動の摩擦駆動輪

24　バックアップローラー

25a、29a　昇降ガイドレール

25b, 29b　昇降台

26, 30　昇降用駆動手段

27, 31　台車引き込み送り出し手段

28, 32　台車用フィーダー

34a, 34b　左右一対の係止具

35a, 35b　係止具位置切り換え手段

37a, 37b　シーソー運動体

38a, 38b　左右一対の棒状昇降体

39a, 39b　カム従動ローラー

40a, 40b　引張スプリング

42a, 42b　ハンガーの被係止部

43a, 43b　前後一対の係止部(ローラー)

44a　L形アーム部

44b　軸受け部材

46　レバーアーム

47　スプリング

51　過負荷検知用センサー

52a, 52b　左右一対のカムレール

54　カムレール駆動手段(シリンダーユニット)

55　台車側の被把持部

56a, 56b　前後一対の開閉挟持片

57　開閉用駆動手段

58　移動用駆動手段

60　可動部材

61　スライドガイド

62　中継ロッド

63, 66　シリンダーユニット

65　リンク

D　トロリーコンベヤの駆動区間

F　トロリーコンベヤの駆動解除区間

W　被搬送物

発明を実施するための最良の形態

[0021] 以下に本発明の具体的実施例を添付図に基づいて説明すると、図1及び図2において、1は被搬送物吊下式搬送装置として本実施形態で使用した従来周知のパワー&フリー形式のトロリーコンベヤであり、下側ガイドレールで構成されるフリーライン2と上側ガイドレールで構成されたパワーライン3とを備え、フリーライン2には、複数のトロリー4，4aを介して走行体5が走行可能に吊り下げられ、パワーライン3の上側ガイドレールには、前記走行体5の先頭のトロリー4aに設けられた被動用ドッグ6に係脱自在なプッシャーを適当間隔おきに備えた駆動用チエンがトロリーを介して吊り下げられ、フリーライン2とパワーライン3との上下間隔が、パワーライン3側のプッシャーがフリーライン2側の走行体5の被動用ドッグ6に係合し得る間隔に設定されている駆動区間Dでは、前記走行体5がプッシャーによりフリーライン2に沿って推進せしめられ、フリーライン2とパワーライン3との上下間隔が上記間隔よりも広くなるか又はフリーライン2上からパワーライン3が横側方に離れる駆動解除区間Fでは、プッシャーによる前記走行体5の駆動が解除され、当該走行体5がフリーライン2上で停止し、フリーライン2に併設された位置決め手段がなければフリーライン2上で自由に遊動できる状態になる。

[0022] 尚、図1に仮想線で示した駆動解除区間Fにおけるパワーライン3は、フリーライン2から上方に離間させてあり、当該駆動解除区間Fの下手側の駆動区間Dで再び元の高さに戻されるように構成しているが、当該駆動解除区間Fにおけるパワーライン3を横側方に迂回させることもできるし、当該駆動解除区間Fの下手側の駆動区間Dで使用されるパワーライン3として、駆動解除区間Fの上手側の駆動区間Dで使用されるパワーライン3とは別の駆動手段で駆動される別系統のパワーライン3を使用することもできる。

[0023] トロリーコンベヤ1の走行体5には被搬送物支持用ハンガー8が吊り下げられている。このハンガー8は、図2及び図8に示すように、左右一対のハンガーアーム10a，10bから成るもので、各ハンガーアーム10a，10bは、縦杆部9aと当該縦杆部9aの下端からほぼ水平後方に延出する水平杆部9b、及び水平杆部9bから内向きに連設された被搬送物支持部9cから構成されている。自動車の車体などの被搬送物Wは、図8に示すように、正面から見て両ハンガーアーム10a，10bの縦杆部9aの内側に納ま

る状態で、その底部の左右両側辺が両ハンガーアーム10a，10bの被搬送物支持部9cで支持される。尚、両ハンガーアーム10a，10bは被搬送物Wの積み下ろしのために左右横方向に開閉運動可能に構成されている。

[0024] 図1において、11は台車式搬送装置であって、トロリーコンベヤ1の駆動解除区間Fにおけるフリーライン2の直下で当該フリーライン2と平行に配設された搬送経路12、当該搬送経路12の下側に当該搬送経路12と平行に配設された台車戻り経路13、搬送経路12の搬送開始端に配設された被搬送物受取手段14、及び搬送経路12の搬送終了端に配設された被搬送物戻し手段15から構成され、複数台の台車16が被搬送物受取手段14から搬送経路12、被搬送物戻し手段15、台車戻り経路13をこの順に経由して被搬送物受取手段14に戻るように循環走行するものである。而して各台車16は、1つの被搬送物Wより適当長さだけ全長が長いもので、搬送経路12や台車戻り経路13側のガイドレール17に車輪18を介して直進走行可能に支持され、被搬送物支持具19とハンガー係止手段20とを備えたものであるが、走行用駆動手段は設けられておらず、走行経路脇に配設された摩擦駆動手段21（図1参照）から受ける推進力によって走行する。摩擦駆動手段21は、図8に示すように、被搬送物受取手段14や被搬送物戻し手段15に併設される台車引き込み送り出し手段27，31と同様に、台車16の走行方向と平行で台車16の全長にわたって連続するように台車16に設けられた左右一対の帯状垂直摩擦面22a，22b（図示例では、台車16の左右両側面をそのまま利用している）の内、一方の摩擦面22aに圧接するモーター駆動の摩擦駆動輪23と、他方の摩擦面22bに当接するバックアップローラー24との組み合わせから構成されている。

[0025] 上記の摩擦駆動手段21は、図1に示すように台車式搬送装置11の搬送経路12や台車戻り経路13の適当位置に必要に応じて制動手段などと共に配設され、搬送経路12では、被搬送物受取手段14からこの搬送経路12内に送り出される台車16を引き継いで、直後の台車16が直前の台車16を後押しする前後突き合いの状態で搬送経路12の終端まで定速で推進させ、被搬送物戻し手段15が台車受入可能になったときに搬送経路12の終端から当該被搬送物戻し手段15へ台車16を1台ずつ送り出すように構成され、台車戻り経路13では、被搬送物戻し手段15からこの台車戻り経

路13内に送り出される台車16を引き継いで被搬送物受取手段14側へ高速走行させ、被搬送物受取手段14が台車受入可能になったときに台車戻り経路13の終端から当該被搬送物受取手段14へ台車16を1台ずつ送り出すように構成されている。

[0026] 被搬送物受取手段14は、図2に示すように、1台の台車16を支持し得る長さの昇降ガイドレール25aが敷設された昇降台25bと、この昇降台25bを、昇降ガイドレール25aが搬送経路12のガイドレール17の始端に接続する上昇限レベルHと昇降ガイドレール25aが台車戻り経路13のガイドレール17の終端に接続する下降限レベルLとの間で昇降させる昇降用駆動手段26とから構成され、昇降台25bには、台車引き込み送り出し手段27と台車用フィーダー28とが搭載されている。被搬送物戻し手段15は、図7に示すように、1台の台車16を支持し得る長さの昇降ガイドレール29aが敷設された昇降台29bと、この昇降台29bを、昇降ガイドレール29aが搬送経路12のガイドレール17の終端に接続する上昇限レベルHと昇降ガイドレール29aが台車戻り経路13のガイドレール17の始端に接続する下降限レベルLとの間で昇降させる昇降用駆動手段30とから構成され、昇降台29bには、台車引き込み送り出し手段31と台車用フィーダー32とが搭載されている。昇降用駆動手段26, 30には、クロスリンク機構方式やラックピニオンギヤ方式、シリンダーによる直接昇降駆動方式など、従来周知の各種方式のものが利用される。

[0027] 各台車16に設けられたハンガー係止手段20は、図8及び図9に示すように、左右一対の係止具34a, 34bと、両係止具34a, 34bを係止作用上位置と係止解除下位置とに切り換える係止具位置切り換え手段35a, 35bとから構成されている。而して、左右一対の係止具34a, 34bは、左右対称形に配置されると共に中央部が前後方向水平支軸36a, 36bで台車16側に軸支された左右一対のシーソー運動体37a, 37bの外端に設けられ、各シーソー運動体37a, 37bの内端には、台車16側に昇降のみ可能に支持された左右一対の棒状昇降体38a, 38bの上端部がそれぞれ長孔とピンとを介して連結され、これら両棒状昇降体38a, 38bの下端外側にはカム従動ローラー39a, 39bが左右方向水平支軸で軸支され、各シーソー運動体37a, 37bの内端側と台車16側との間に掛張された引張スプリング40a, 40bにより、各シーソー運動体37a, 37bの内端側が台車16側のストッパー41a, 41bで受け止められるように各

シーソー運動体37a，37bが付勢されている。従って、両カム従動ローラー39a，39bに下向きの操作力が働いていない状況では、各係止具34a，34bが係止作用上位置に保持されると共に両棒状昇降体38a，38bが上昇限まで上昇して両カム従動ローラー39a，39bが上昇限に同心状で位置する状態にある。

[0028] 左右一対の係止具34a，34bは、図10に示すように、被搬送物支持用ハンガー8の左右一対のハンガーアーム10a，10bにおける被搬送物支持部9cの基部で構成された被係止部42a，42bを前後から挟む前後一対の係止部43a，43bから構成されている。これら各係止部43a，43bは、各係止具34a，34bが係止作用上位置にあるとき（シーソー運動体37a，37bが水平姿勢にあるとき）に左右方向水平向きとなる支軸で軸支されたローラーから構成され、搬送経路12における台車走行方向側に位置する前側係止部43aのローラーは、シーソー運動体37a，37bの外端から連設されたL形アーム部44aの先端に軸支され、ハンガー8を後押しする後側係止部43bのローラーは、シーソー運動体37a，37bの外端から連設された軸受け部材44bに前記ローラーを軸支する支軸と平行な支軸45で中間位置が軸支されたレバーアーム46の上端に軸支されて、前側係止部43aのローラーに対して遠近方向（前後方向）に一定範囲内で移動可能に構成され、前記レバーアーム46の下端部を押圧付勢するスプリング47により、前側係止部43aのローラーとの間に被係止部42a，42bが相対的に嵌入する凹部を形成する位置に付勢保持されている。尚、前記スプリング47は、軸受け部材44bの先端に支軸48で軸支され且つレバーアーム46の下端部を貫通する軸杆49の遊端部に螺嵌されたバネ受け座50aと、当該軸杆49に軸方向遊動自在に遊嵌された可動バネ受け座50bとの間で軸杆49に遊嵌され、可動バネ受け座50を介してレバーアーム46の下端部を付勢する。

[0029] 上記構成の左右一対の係止具34a，34bには、過負荷検知用センサー51がそれぞれ併設されている。このセンサー51は、軸受け部材44bに取り付けられたリミットスイッチから構成されたもので、各係止具34a，34bにおけるレバーアーム46の上端外側に付設された当接部材46aを介して、当該レバーアーム46（後側係止部43b）がスプリング47の付勢力に抗して一定角度揺動したことを検知する。

[0030] 係止具位置切り換え手段35aは、図2に示すように被搬送物受取手段14の昇降台

26に設けられ、係止具位置切り換え手段35bは、図7に示すように被搬送物戻し手段15の昇降台31に設けられており、各係止具位置切り換え手段35a，35bは、台車16が被搬送物受取手段14の昇降ガイドレール25又は被搬送物戻し手段15の昇降ガイドレール30の定位置に乗り移ったとき、図8及び図9に示すように、当該台車16の両カム従動ローラー39a，39bが各別に嵌合する左右一対のカムレール52a，52bと、両カムレール52a，52bを支持する1つの昇降台53を昇降駆動するカムレール駆動手段（シリンダーユニット）54とから構成されている。

[0031] 被搬送物受取手段14の昇降台25bに設けられた台車用フィーダー28と被搬送物戻し手段15の昇降台29bに設けられた台車用フィーダー32とは、図8及び図12に示すように、台車16の底部の左右一側部に下向きに突設された被把持部55を前後から挟持する前後一対の開閉挟持片56a，56bと、この開閉挟持片56a，56bの開閉用駆動手段57と、前記開閉挟持片56a，56bを前後方向に往復移動させる移動用駆動手段58とから構成されている。具体的に説明すると、前後一対の開閉挟持片56a，56bと開閉用駆動手段57とは、昇降台25b，29bに付設されたスライドガイドレール59を介して昇降ガイドレール25a，29a上での台車16の前後移動方向に移動自在に支持された可動部材60に取り付けられ、移動用駆動手段58は、前記可動部材60に一端が連結され且つ昇降台25b，29bに付設されたスライドガイド61によって前後方向移動自在に支持された中継ロッド62の他端と昇降台25b，29bとの間に介装されたシリンダーユニット63によって構成されている。

[0032] 前後一対の開閉挟持片56a，56bは、それぞれ支軸64a，64bによって前記可動部材60に軸支されると共に、リンク65によって互いに連動して開閉運動するように連動連結され、一方の開閉挟持片56aと前記可動部材60との間に、開閉用駆動手段57を構成するシリンダーユニット66が介装されている。従って、シリンダーユニット66のピストンロッドの出し入れにより前後一対の開閉挟持片56a，56bを開閉動作させることができ、シリンダーユニット63のピストンロッドの出し入れにより、前後一対の開閉挟持片56a，56bを開閉用駆動手段57（シリンダーユニット66）と共に前後移動させることができる。

[0033] 以下、上記構成の搬送設備の使用方法について説明すると、トロリーコンベヤ1の

駆動区間Dを駆動解除区間Fに向かって走行する走行体5、即ち、ハンガー8により被搬送物Wを吊り下げた走行体5は、図1及び図2に示す駆動区間Dの終端位置（駆動解除区間Fの始端位置）P1で駆動解除されるので、フリーライン2に併設された適当な補助フィーダー（図示省略）により、被搬送物受取手段14の上方定位置にハンガー8が位置する定停止位置P2まで移動させる。勿論、トロリーコンベヤ1の駆動区間Dの終端位置P1で走行体5を精度良く停止させることができるならば、前記駆動区間Dの終端位置P1を被搬送物受取手段14に対する定停止位置P2の位置に設定して、前記補助フィーダーを無くすことも可能である。

[0034] 一方、被搬送物受取手段14では、昇降台25bを下降限レベルLに下降させ、台車式搬送装置11における台車戻り経路13のガイドレール17上から被搬送物受取手段14における昇降ガイドレール25a上の定位置まで1台の空台車16を、台車戻り経路13の終端に併設されている摩擦駆動手段21と前記昇降台25b側の台車引き込み手段27とで移載させる。台車戻り経路13上の空台車16のハンガー係止手段20は、その左右一対の係止具34a，34bが、図9に示すスプリング40a，40bの付勢力で係止作用上位置に保持されている状態であるから、当該空台車16を引き込む側の被搬送物受取手段14側では、昇降台25bに配設されている係止具位置切り換え手段35aのカムレール52a，52bをカムレール駆動手段（シリンダーユニット）54により下降限レベルまで下げておき、昇降ガイドレール25a上に引き込まれる空台車16のハンガー係止手段20における左右一対のカム従動ローラー39a，39bを係止具位置切り換え手段35aのカムレール52a，52b内に進入させる（図9A参照）。そして空台車16が定位置まで引き込まれて停止したならば、係止具位置切り換え手段35aのカムレール52a，52bをカムレール駆動手段（シリンダーユニット）54により上昇限レベルまで上昇させ、カム従動ローラー39a，39bを介してシーソー運動体37a，37bをスプリング40a，40bの付勢力に抗して揺動させることにより、左右一対の係止具34a，34bを係止解除下位置に切り換えておく（図9B参照）。尚、図1に示すように、空台車16が定位置に移載された被搬送物受取手段14の昇降台25bは、下降限レベルLと上昇限レベルHとの間の中間レベルまで上昇させた状態で待機させておくことができる。

[0035] 先に述べたように、トロリーコンベヤ1の走行体5が被搬送物受取手段14に対する定停止位置P2で停止したならば、図3に示すように、空台車16を定位置に支持している被搬送物受取手段14の昇降台25bを上昇限レベルHまで上昇させる。この結果、空台車16の被搬送物支持具19が走行体5のハンガー8に支持されていた被搬送物Wを持ち上げ、当該被搬送物Wをハンガー8から所定高さdだけ浮上させることになる。このとき、係止解除下位置に切り換えられているハンガー係止手段20の左右一対の係止具34a，34bは、図11Aに示すように、被搬送物Wを支持していたハンガー8の被係止部42a，42bよりも一定距離だけ前方で且つ下方位置にある。又、被搬送物受取手段14の昇降台25bに配設されている台車用フィーダー28は、図12Aに示すように前後一対の開閉挟持片56a，56bが、当該昇降ガイドレール25a上の定位置に停止した台車16の被把持部55の真下位置で前後に開いた状態（シリンダーユニット66のピストンロッドが引き込まれた状態）にある。

[0036] 昇降ガイドレール25a上の台車16で走行体5のハンガー8から被搬送物Wを受け取らせたならば、図12Bに示すように、台車用フィーダー28におけるシリンダーユニット66のピストンロッドを進出させて前後一対の開閉挟持片56a，56bを閉動させることにより、被搬送物Wを支持している台車16の被把持部55を前後一対の開閉挟持片56a，56bで前後から挟持させる。係る状態で移動用駆動手段58のシリンダーユニット63により可動部材60を一定距離sだけ後方に移動させることにより、図4に示すように、当該台車16を昇降ガイドレール25a上で後方に一定距離sだけ移動させる。このとき、ハンガー係止手段20が台車16に設けられているので、図4及び図11Bに示すように、係止解除下位置に切り換えられているハンガー係止手段20の左右一対の係止具34a，34bもハンガー8に対して後方へ一定距離sだけ移動し、当該左右一対の係止具34a，34bがハンガー8の被係止部42a，42bの真下位置に位置することになる。而して、当該係止具34a，34bと一体に後方に移動するカム従動ローラー39a，39bは、昇降台25b側にあって後方には移動しないカムレール52a，52b内を移動することになるが、この移動によってカム従動ローラー39a，39bがカムレール52a，52b内からは離脱しないように、当該カムレール52a，52bの長さが設定されている。従って、係る状態で係止具位置切り換え手段35aのカムレール52a，52bをカムレ

ール駆動手段(シリンダーユニット)54により下降限レベルまで下降させ、カム従動ローラー39a, 39bを介して台車16側のシーソー運動体37a, 37bをスプリング40a, 40bの付勢方向に水平姿勢まで揺動復帰させることにより(図9A参照)、左右一対の係止具34a, 34bを係止解除下位置から係止作用上位置に切り換えて、図5及び図11Cに示すように、各係止具34a, 34bをハンガー8の被係止部42a, 42bに係止させる。即ち、各係止具34a, 34bの前後一対の係止部(ローラー)43a, 43b間にハンガー8の被係止部42a, 42bを嵌合させる。

[0037] 被搬送物受取手段14における上記の一連の動作により、図2に示すように、トロリーコンベヤ1のハンガー8で支持されて吊下搬送されていた被搬送物Wは、当該ハンガー8に対して持ち上げられると共に後方に一定距離sだけ移動せしめられた状態で台車16の被搬送物支持具19に支持され、被搬送物Wの支持から開放されたハンガー8は、ハンガー係止手段20を介して台車16に係止されることになる。従って、当該被搬送物Wの左右両側の作業部位(例えば自動車車体に対する前側左右両ドアーの取付部位)Waが、当該被搬送物Wがトロリーコンベヤ1のハンガー8で支持されて吊下搬送されていたときに当該ハンガー8の左右一対のハンガーアーム10a, 10bにおける縦杆部9aと横から見て重なる位置にあったとしても、この被搬送物Wがハンガー8から台車16上に移載された最終段階では、図5に示すように前記作業部位Waは、当該被搬送物Wの左右両側に位置するハンガー8の左右一対のハンガーアーム10a, 10bにおける縦杆部9aから横から見て後方に外れた位置に移動したことになる。換言すれば、このような結果となるように被搬送物受取手段14上での台車用フィーダー28による台車16の後方への移動距離sが設定されている。

[0038] 次に、台車用フィーダー28におけるシリンダーユニット66のピストンロッドを引き込み移動させて前後一対の開閉挟持片56a, 56bを開動させ、当該開閉挟持片56a, 56bを台車16側の被把持部55より下側レベルに逃がした後、直ちに、又はこの後の適当な時期に、移動用駆動手段58のシリンダーユニット63により可動部材60を一定距離sだけ前方に移動復帰させ、この台車用フィーダー28を元の待機状態に戻す。前記のように開閉挟持片56a, 56bを開動させて台車16側の被把持部55より下側レベルに逃がしたならば、図6に示すように、この被搬送物受取手段14における昇降

ガイドレール25a上の台車16を台車引き込み送り出し手段27により搬送経路12のガイドレール17上に送り出すと共に当該搬送経路12が備える摩擦駆動手段21により当該搬送経路12上で定速走行駆動することにより、被搬送物支持具19で支持する被搬送物Wを搬送経路12上で定速搬送すると共に、当該被搬送物Wの支持から開放された状態のハンガー8を備えたトロリーコンベヤ1の走行体5を、当該ハンガー8とハンガー係止手段20とを介して、台車16が走行する搬送経路12と平行な駆動解除区間Fのフリーライン2に沿って当該台車16により牽引移動させることができる。この状態において、例えば被搬送物Wの左右両側の作業部位Waに対する作業を、当該被搬送物Wと一体に移動するトロリーコンベヤ1の走行体5のハンガー8に邪魔されることなく、台車16上に搭乗した作業者によって遂行させることができる。

[0039] 上記の台車式搬送装置11における台車16での被搬送物Wの搬送過程において、ハンガー係止手段20により当該台車16に係止されて牽引されるトロリーコンベヤ1側の走行体5やハンガー8に何らかの障害が発生し、これら走行体5又はハンガー8の円滑な前進移動が妨げられるような事態が生じたときは、台車16側のハンガー係止手段20に過負荷が生じる。この過負荷は、ハンガー係止手段20における左右一対の係止具34a，34bを構成する後側係止部43bに後方向きに作用するので、結果として、後側係止部43bがスプリング47の付勢力に抗して後方に傾動し、この傾動をセンサー51が検知することになるので、当該センサー51の検知信号を利用して、当該台車16に非常停止をかけるなどの安全対策が自動的に講じられるように構成することができる。

[0040] トロリーコンベヤ1により吊下搬送される後続の各被搬送物Wも上記の一連の動作により被搬送物受取手段14において台車式搬送装置11の台車16上に移載すると共に、当該被搬送物Wを吊下搬送していたトロリーコンベヤ1の走行体5もハンガー8を介して台車16に係止し、吊下搬送していた被搬送物Wと一体に台車16により台車式搬送装置11の搬送経路12上に順次送り込み、各台車16が前後に突き合う状態で定速搬送させ、その間に各台車16上の被搬送物Wに対して所定の作業を遂行させることができる。

[0041] 台車式搬送装置11の搬送経路12の終端に達した台車16は、被搬送物戻し手段1

5の昇降ガイドレール29a上に移載させる。即ち、図7に示すように、被搬送物戻し手段15の昇降台29bを昇降駆動手段30により上昇限レベルHまで上昇させ、昇降ガイドレール28aを台車式搬送装置11の搬送経路12のガイドレール17に接続させておく。そして台車式搬送装置11の搬送経路12の終端の摩擦駆動手段21で昇降ガイドレール29a上に台車16が送り出されたならば、昇降台29b側の台車引き込み送り出し手段31により当該台車16を昇降ガイドレール29a上の定位置まで引き込み、停止させる。このとき、図1及び図7に示すように、当該台車16にハンガー係止手段20で係止されて牽引されてきたトロリーコンベヤ1の走行体5(ハンガー8)は、トロリーコンベヤ1における駆動解除区間Fの終端位置(駆動区間Dの始端位置)P4より一定距離だけ上手側の定停止位置P3で停止することになる。又、ハンガー8を係止しているハンガー係止手段20のカム従動ローラー39a, 39bは、昇降台29b側の係止具位置切り換え手段35bの下降限位置に下げられているカムレール52a, 52b内に進入し、昇降台29b側の台車用フィーダー32の前後一対の開閉挟持片56a, 56bは、後退限位置(シリンダーユニット63のピストンロッドが引き込まれた位置)にあって且つ開動した状態にあり、台車16側の被把持部55は、当該開動した状態にある前後一対の開閉挟持片56a, 56b間の真上で停止することになる。

[0042] 被搬送物Wを支持すると共に当該被搬送物Wから切り離されたハンガー8を介してトロリーコンベヤ1の走行体5を牽引移動させてきた台車16が被搬送物戻し手段15の台車引き込み送り出し手段31により昇降ガイドレール29a上の定位置まで引き込まれて停止したならば、次に、図7に示すように、昇降台29b側の係止具位置切り換え手段35bのカムレール52a, 52bをシリンダーユニット54により上昇限まで上昇させ、当該カムレール52a, 52bに進入しているカム従動ローラー39a, 39bを押し上げてシーソー運動体37a, 37bをスプリング40a, 40bの付勢力に抗して傾動させ、以て、左右一対の係止具34a, 34bを係止作用上位置から係止解除下位置に切り換え、ハンガー8における左右一対のハンガーアーム10a, 10bの被係止部42a, 42bから下方に離脱させる(図9B及び図11B参照)。このようにして台車16からハンガー8を切り離した状態で、次に昇降台29b側の台車用フィーダー32の前後一対の開閉挟持片56a, 56bを開閉用駆動手段57のシリンダーユニット66により閉動させ、真上位置

で停止している台車16の被把持部55を挟持させ、続いて当該台車用フィーダー32の移動用駆動手段58のシリンダーユニット63により当該開閉挟持片56a，56bを一定距離sだけ前進移動させる。この結果、支持している被搬送物Wと共に台車16が一定距離sだけ昇降ガイドレール29a上で前進移動し、当該台車16が支持している被搬送物Wが、定停止位置P3で停止したままのトロリーコンベヤ1の走行体5におけるハンガー8に対して一定距離sだけ前進移動することになる。

[0043] 上記の被搬送物戻し手段15での一連の動作により、被搬送物Wとハンガー8との前後方向の相対位置関係が、トロリーコンベヤ1における走行体5のハンガー8から台車式搬送装置11の台車16に移し替られる以前の状態、即ち、トロリーコンベヤ1で吊下搬送されているときのハンガー8と被搬送物Wとの前後方向相対位置関係に戻されたことになる。係る状態で、次に台車用フィーダー32の開閉挟持片56a，56bを開動させ、台車16の被把持部55に対する挟持を解除した後、この被搬送物戻し手段15の昇降駆動手段30により昇降台29b（昇降ガイドレール29a）を上昇限レベルHから下降限レベルLまで降下させると、これに伴って下降する台車16の被搬送物支持具19で支持されていた被搬送物Wが下降途中でハンガー8の左右一対のハンガーアーム10a，10bにおける被搬送物支持部9cに乗り移り、当該ハンガー8で支持される状態に戻される。一方、昇降ガイドレール29a上の空になった台車16は、昇降台29bが下降限レベルLに達して台車式搬送装置11の台車戻り経路13のガイドレール17と接続する状態になった昇降ガイドレール29a上から、当該昇降台29b側の台車引き込み送り出し手段31と台車戻り経路13側の摩擦駆動手段21とにより台車戻り経路13内に送り出されると共に当該台車戻り経路13上で被搬送物受取手段14に向けて搬送される。

[0044] 台車16の下降により当該台車16から切り離されてハンガー8上に戻された被搬送物Wは、当該ハンガー8を備えた走行体5、即ち、定停止位置P3で停止しているトロリーコンベヤ1の走行体5を、トロリーコンベヤ1における駆動解除区間Fの終端位置（駆動区間Dの始端位置）P4までフリーライン2に沿って併設された適当な補助フィーダーにより移動させることにより、トロリーコンベヤ1のパワーライン3を移動するプッシャーにより駆動解除区間Fの下手側の駆動区間Dにおいて再び推進させ、被搬送物

Wを吊下搬送することができる。このときの被搬送物Wとハンガー8との間の前後方向相対位置関係は、駆動解除区間Fの入り口で台車式搬送装置11の台車16に移し替られる以前の状態と同一であることは明らかである。尚、定停止位置P3を駆動解除区間Fの下手側の駆動区間Dに入った位置に設定し、当該定停止位置P3で停止した走行体5の被動ドッグ6を適当な操作手段で下げておくなどして、当該定停止位置P3で停止した走行体5の被動ドッグ6には駆動区間Dにおけるパワーライン3のプッシャーが作用しないように構成し、ハンガー8への被搬送物Wの戻し作用が完了した時点で下げられていた被動ドッグ6を復帰させるなどして、当該定停止位置P3から直ちにトロリーコンベヤ1のパワーライン3を移動するプッシャーにより走行体5を推進させるようにして、定停止置P3から走行体5を所定位置まで移動させる補助フィーダーを無くすこともできる。

[0045] 本発明は以上の実施形態のように実施できるものであるが、台車式搬送装置11の台車16上での被搬送物Wに対する作業部位Waが、当該被搬送物Wを吊下搬送してきたトロリーコンベヤ1の走行体5におけるハンガー8から離れた位置であって、当該作業部位Waに対する作業に前記ハンガー8が邪魔にならない位置であるときは、台車16上に移載された被搬送物Wと当該被搬送物Wを支持していたハンガー8とを前後方向に相対移動させる手段及び行程は省くことができる。

産業上の利用可能性

[0046] 本発明に係る搬送設備は、例えば自動車のボディーにドアーなどの各種部品を取り付ける自動車組み立てラインにおける自動車ボディーの搬送設備として利用できる。

請求の範囲

[1] 被搬送物吊下式搬送装置と、台車式搬送装置と、被搬送物受取手段と、被搬送物戻し手段とを備えた搬送設備であって、

前記被搬送物吊下式搬送装置は、被搬送物支持用ハンガーが設けられた走行体を備えると共に、この走行体の走行経路中には、当該走行体を強制走行させる駆動区間と、当該走行体を移動自由な状態とする駆動解除区間とが設けられ、

前記台車式搬送装置は、前記走行体の走行経路の駆動解除区間の下側で当該走行経路に沿って走行可能な台車を備えると共に、当該台車上には被搬送物支持具が設けられ、

前記被搬送物受取手段は、前記台車式搬送装置の搬送開始端において前記被搬送物支持具を前記走行体のハンガーに対して相対的に上げて当該ハンガーから被搬送物を前記被搬送物支持具に移載する手段であり、

前記被搬送物戻し手段は、前記台車式搬送装置の搬送終了端において前記被搬送物支持具を前記走行体のハンガーに対して相対的に下げて当該被搬送物支持具からハンガーに被搬送物を移載する手段である搬送設備において、

前記被搬送物吊下式搬送装置の走行体の被搬送物支持用ハンガーには、被係止部が設けられ、

前記台車式搬送装置の台車には、前記ハンガーの被係止部に対し係脱自在なハンガー係止手段が設けられ、

前記台車式搬送装置の搬送経路では、前記ハンガー係止手段が前記ハンガーの被係止部と係合し、駆動解除状態に切り換えられている前記被搬送物吊下式搬送装置の走行体を前記台車が前記ハンガーを介して牽引移動させるように構成されている搬送設備。

[2] 前記被搬送物吊下式搬送装置は、その走行体の走行経路に沿って移動するプッシャーで当該走行体を推進させるトロリーコンベヤにより構成され、

前記走行体の駆動解除区間では、前記プッシャーが走行体から切り離されて駆動解除状態に切り換えられるように構成された、請求項1に記載の搬送設備。

[3] 前記被搬送物受取手段及び被搬送物戻し手段は、前記台車式搬送装置の台車

自体を昇降させる昇降台によって構成されている、請求項1に記載の搬送設備。

[4] 前記ハンガー係止手段は、前記台車式搬送装置の搬送開始端においてハンガーから被搬送物を受け取った被搬送物支持具と当該ハンガーとが相対的に一定距離前後方向に移動したときにハンガー側の被係止部に対応する位置に設けられ、

前記台車式搬送装置の搬送終了端においては、被搬送物を支持する被搬送物支持具とハンガーとを元の前後方向相対位置に戻した後、前記被搬送物戻し手段を動作させるように構成された、請求項1に記載の搬送設備。

[5] 前記台車式搬送装置の搬送開始端及び搬送終了端における被搬送物支持具とハンガーとの相対的前後方向移動が、前記台車自体の前後方向移動により行われるように構成された、請求項4に記載の搬送設備。

[6] 前記台車式搬送装置は、自走できない台車を搬送経路側に配設された台車駆動手段により推進させる構成のものであり、

前記被搬送物受取手段には、台車を搬送経路側へ送り出す台車送り出し手段と、支持する台車を、前記ハンガー係止手段がハンガーの被係止部に対応する位置まで前後方向に移動させる台車用フィーダーとが設けられ、

前記被搬送物戻し手段には、搬送経路から送り込まれる台車を所定位置まで引き込む台車引き込み手段と、支持する被搬送物とハンガーとが元の前後方向相対位置に戻るように台車を前後方向に復帰移動させる台車用フィーダーとが設けられている、請求項5に記載の搬送設備。

[7] 前記被搬送物受取手段と前記被搬送物戻し手段の台車用フィーダーは、台車に設けられた被把持部を前後から挟持する前後一対の開閉挟持片と、この開閉挟持片の開閉用駆動手段と、前記開閉挟持片を前後方向に往復移動させる移動用駆動手段とから構成されている、請求項6に記載の搬送設備。

[8] 前記ハンガーは左右一対のハンガーアームを備え、

前記ハンガー係止手段は、左右各ハンガーアームに設けられた被係止部に対し係脱自在な左右一対の係止具と、この左右一対の係止具を連動させて係脱動作させる1つの係止具位置切り換え手段とから構成されている、請求項1に記載の搬送設備。

[9] 前記左右一対の係止具は、ハンガー側の被係止部に係合する上位置にスプリング

により付勢保持され、

前記台車には、各係止具それぞれに連動して昇降するカム従動ローラーが設けられ、

前記係止具位置切り換え手段は、前記被搬送物受取手段及び被搬送物戻し手段の位置に台車があるときに当該台車側の前記カム従動ローラーと係合するように前記被搬送物受取手段及び被搬送物戻し手段にそれぞれ併設されたカムレールと、これらカムレールを昇降させるカムレール駆動手段とから構成されている、請求項8に記載の搬送設備。

[10] 前記左右一対の係止具は、左右横向きに配置され且つ中間に支点を有する左右一対のシーソー運動体の外端にそれぞれ設けられ、両シーソー運動体の内端に昇降体が連動連結されると共に当該昇降体の下端に前記カム従動ローラーが軸支されている、請求項9に記載の搬送設備。

[11] 前記ハンガー係止手段は、前記ハンガーに設けられた被係止部に対し上下方向に嵌合離脱自在な係止具と、この係止具を昇降移動させる係止具位置切り換え手段と、センサーとから成り、

前記係止具は、前記被係止部を挟む前後一対の係止部を備え、この前後一対の係止部の内、被係止部を後押しする後側係止部は、一定範囲内前後移動自在に構成されると共にスプリングにより前側定位置に付勢保持され、

前記センサーは、前記後側係止部が前記スプリングに抗して後方に移動したことを検知する、請求項1に記載の搬送設備。

[図1]

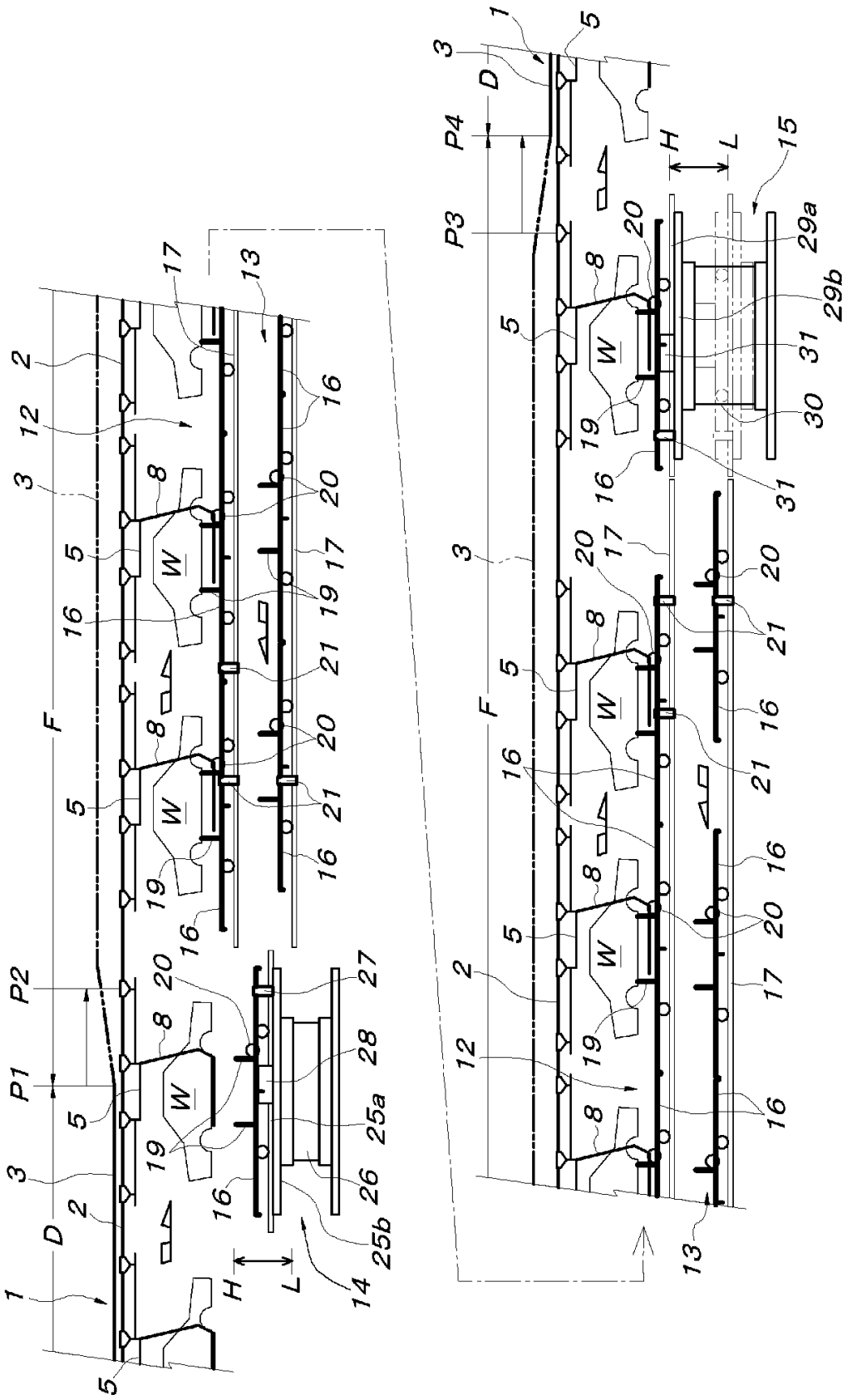
1
2
3
5
8
12
13
14
15
16
17
19
20
21
25a
25b
26
27
28
29a
29b
30
31
W
D
F
H
L
P1
P2
P3
P4

[図2]

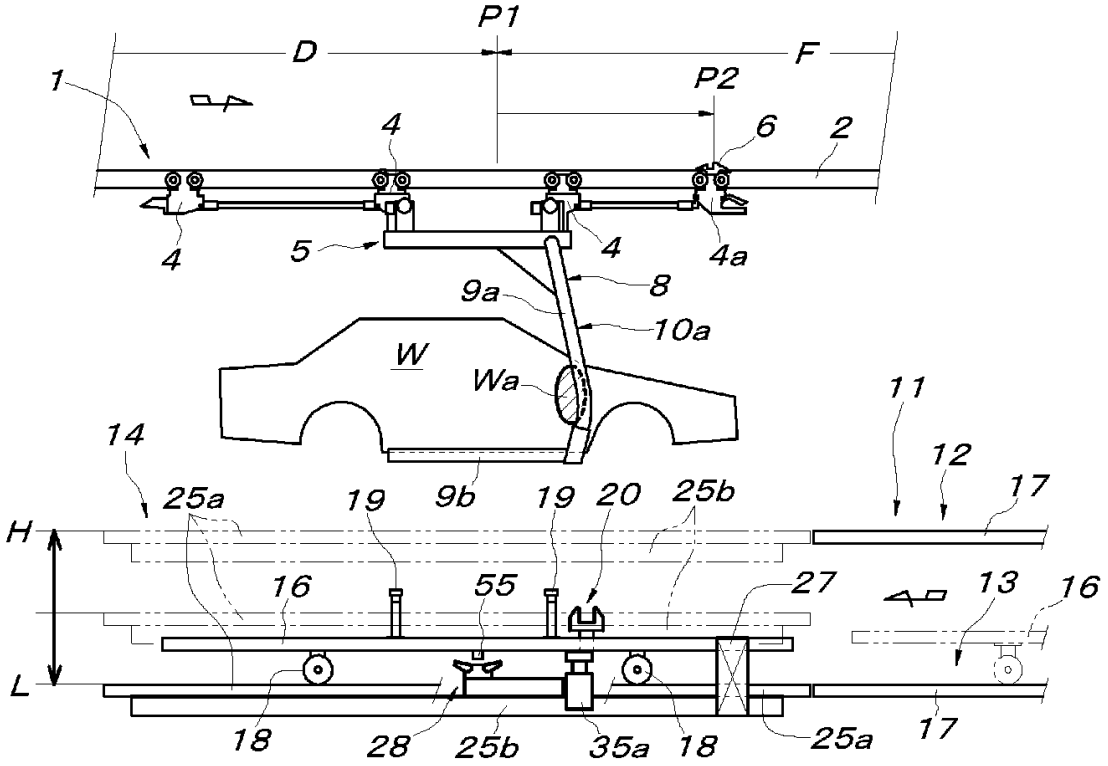
P1
D
F
1
P2
4
6
2
4
5
4
4a
9a
8
10a
W
Wa
11
14
12
25a
19
9b
19
20
25b
17
H
16
55
27
13
16
L
18
28
25b
35a
18
25a
17

[図3]

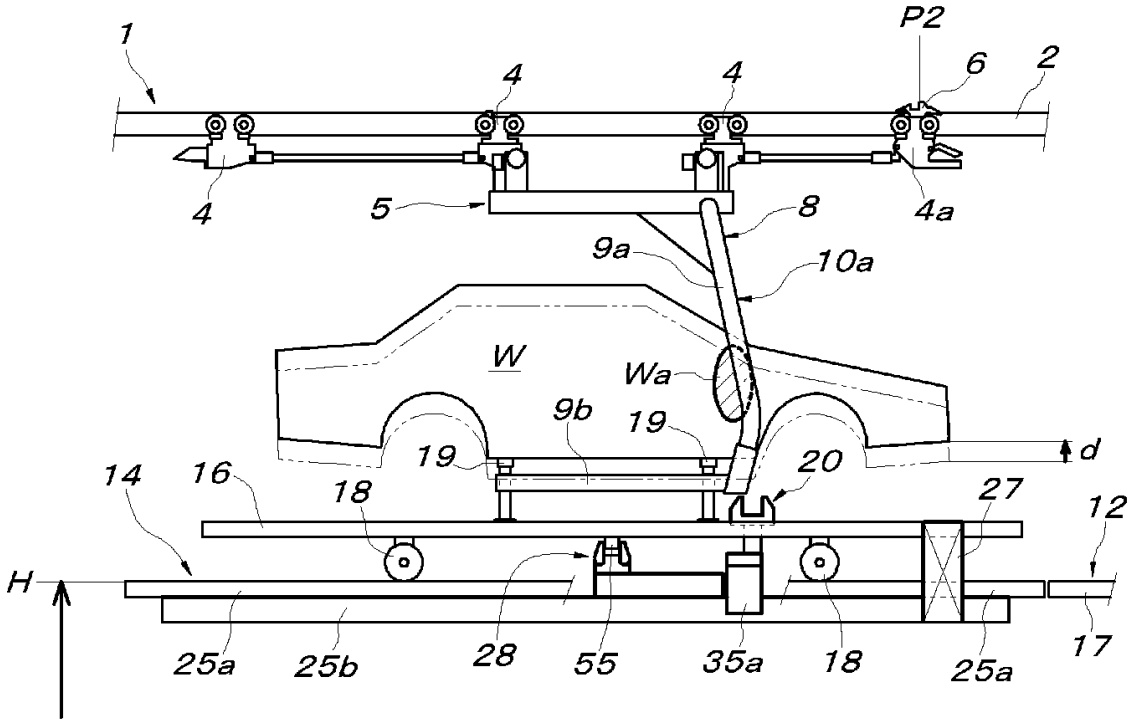
1
P2
4
4
6
2
4
5
8
4a
9a
10a
W
Wa
9b
19
19
d
14
16
18
20
27
12
H
25a
25b
28
55
35a
18
25a
17

[図4]

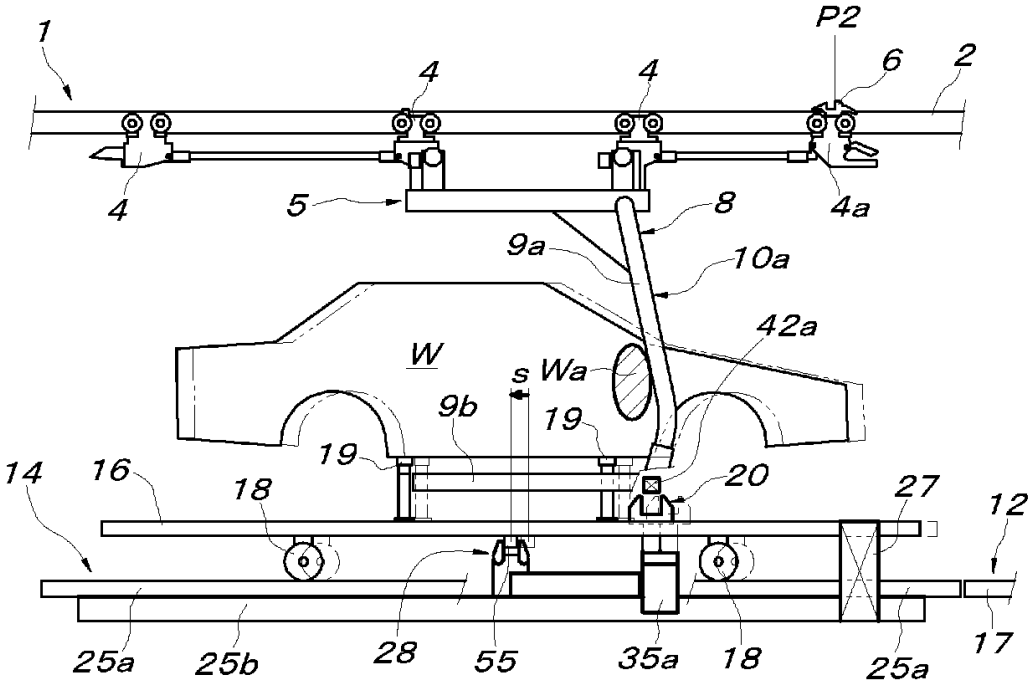
1
P2
6
2
4
4
4
5
8
4a
9a
10a
42a
W
s
Wa
9b
19
19
20
14
16
18
27
12
25a
25b
28
55
35a
18
25a
17

[図5]

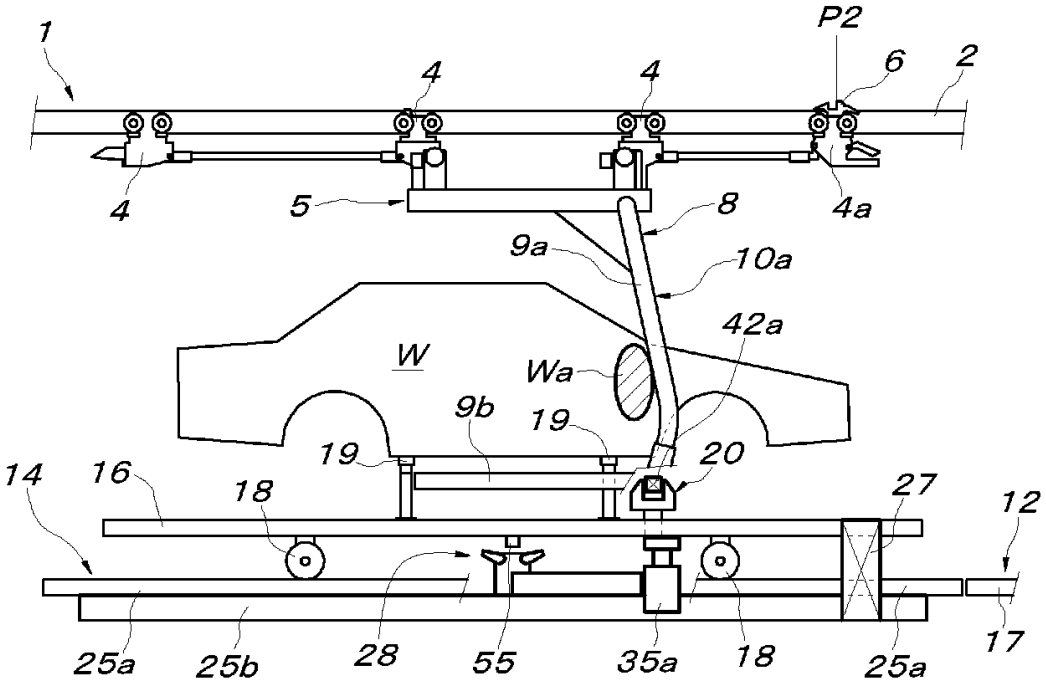
1
P2
6
2
4
4
4
5
8
4a
9a
10a
42a
W
Wa
9b
19
19
20
14
16
18
27
12
25a
25b
28
55
35a
18
25a
17

[図6]

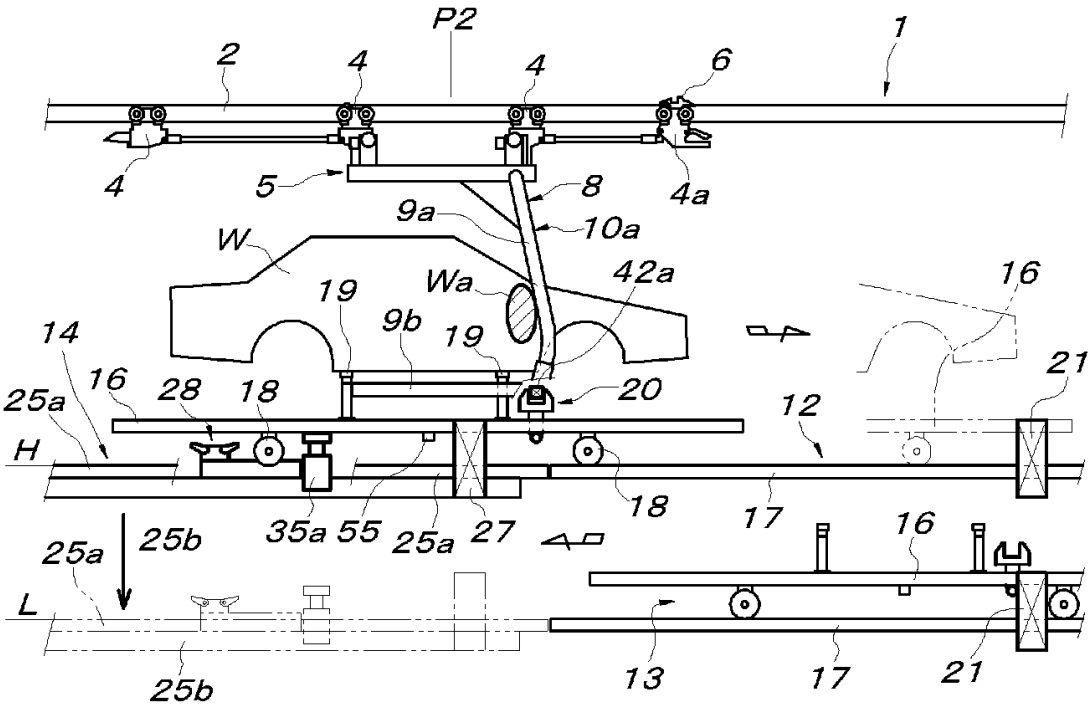
P2
1
2
4
4
6
4
5
8
4a
9a
10a
W
Wa
42a
16
19
9b
19
14
16
28
18
20
21
25a
12
H
18
35a
55
25a
27
17
16
25a
25b
L
13
17
21
25b

[図7]

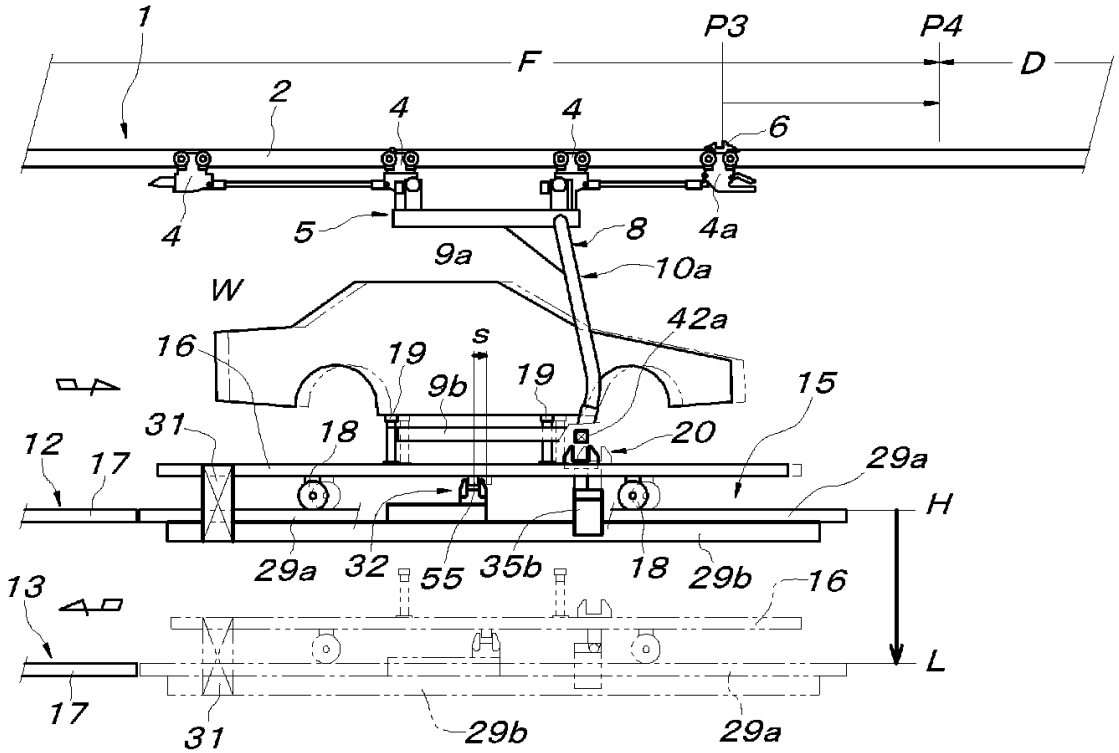
1
P3
P4
F
D
2
4
4
6
4
5
8
4a
9a
10a
W
42a
16
19
s
9b
19
15
31
18
20
12
17
29a
H
29a
32
55
35b
18
29b
16
13
L
17
31
29b
29a

[図8]

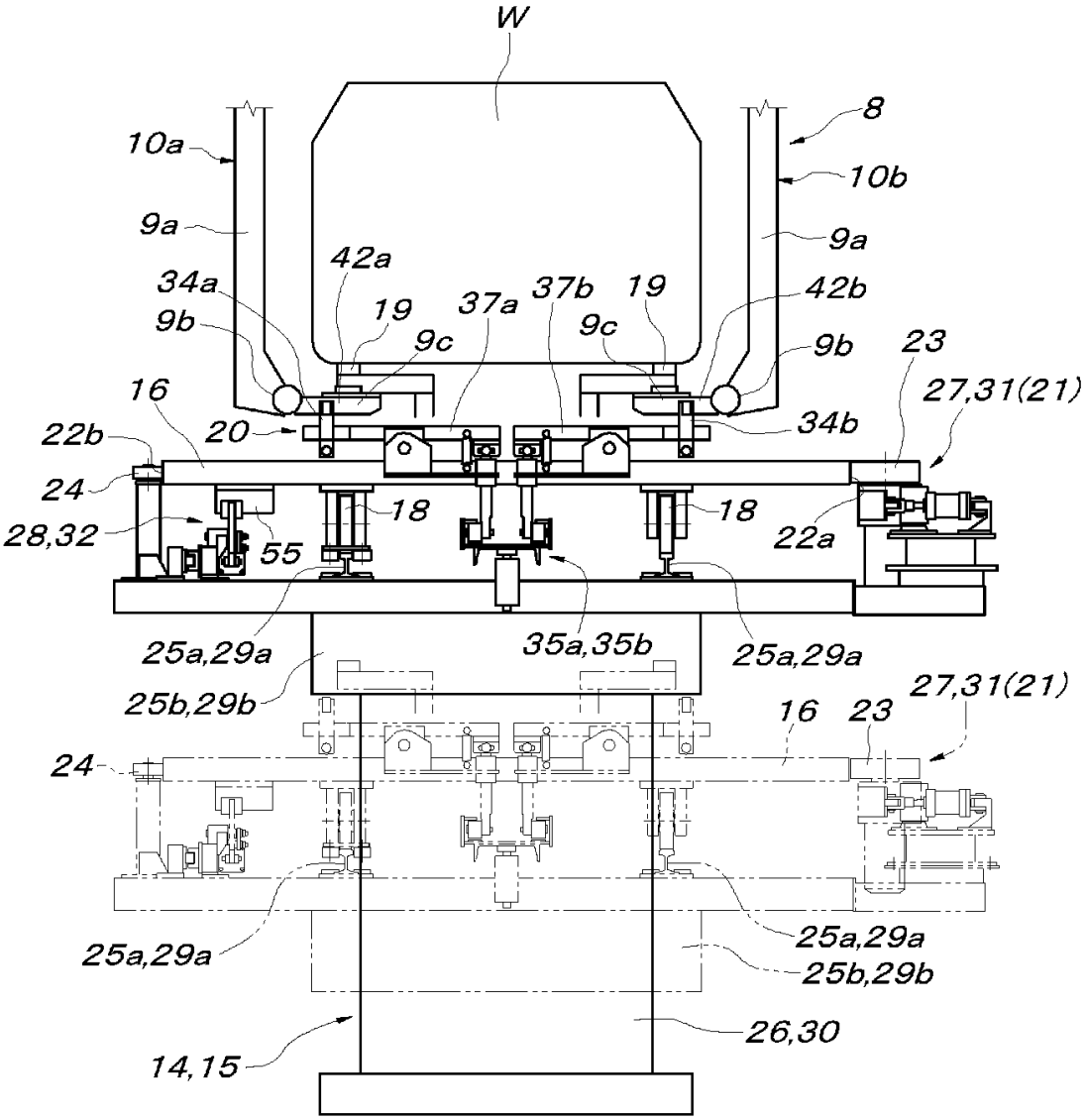
W
8
10a
10b
9a
9a
42a
34a
19
37a
37b
19
42b
9b
9c
9c
9b
23
16
27,31(21)
22b
20
34b
24
18
18
28,32
55
22a
25a,29a
35a,35b
25a,29a
25b,29b
27,31(21)
16
23
24
25a,29a
25a,29a
25b,29b
26,30
14,15

[図9]

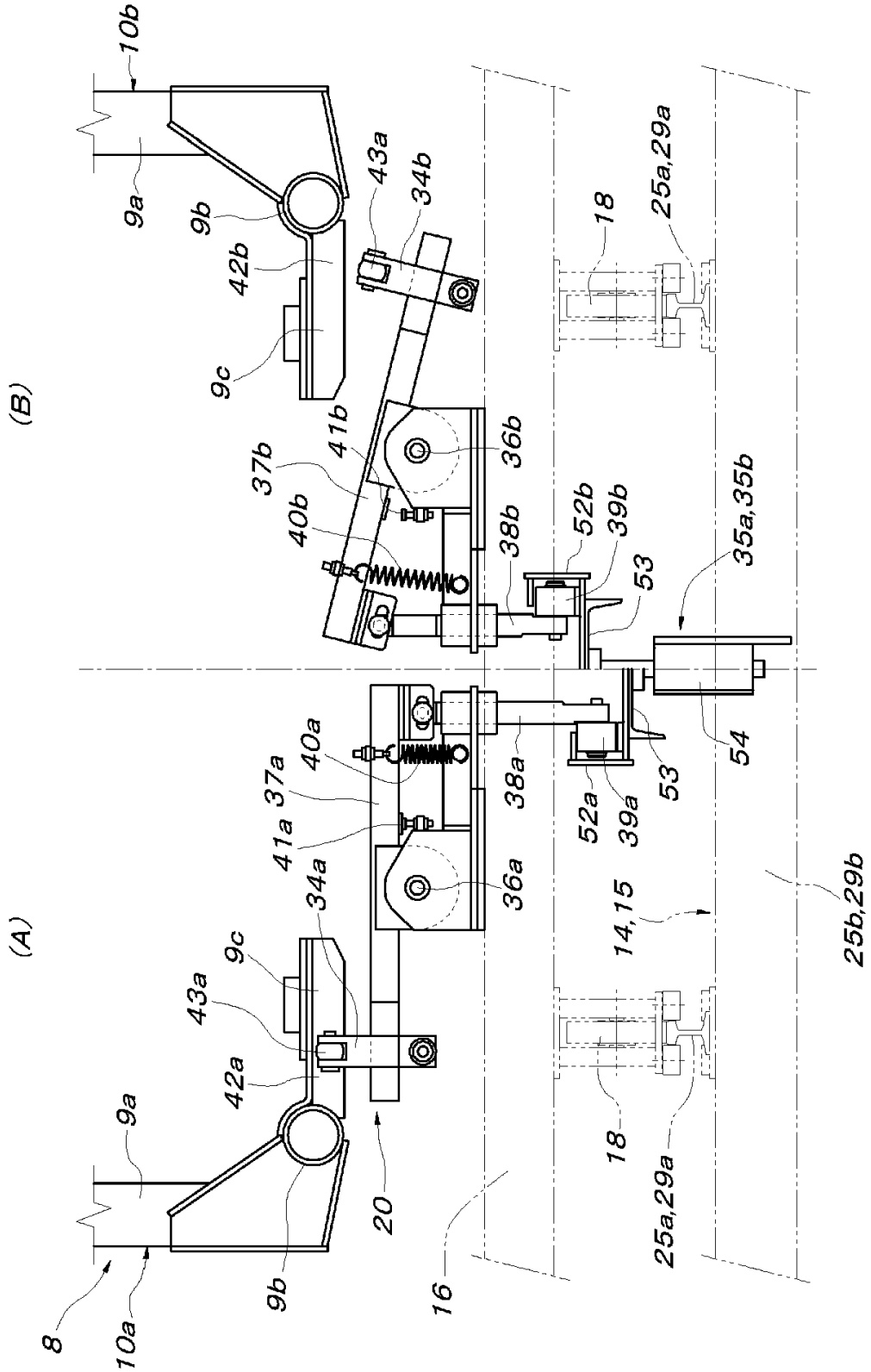
(A)
(B)
8
10a
9a
9b
9c
42a
43a
34a
20
16
37a
41a
40a
36a
38a
52a
39a
53
54
14,15
18
25a,29a
25b,29b
10b
42b
43a
34b
37b
41b
40b
36b
38b
52b
39b
35a,35b

[図10]

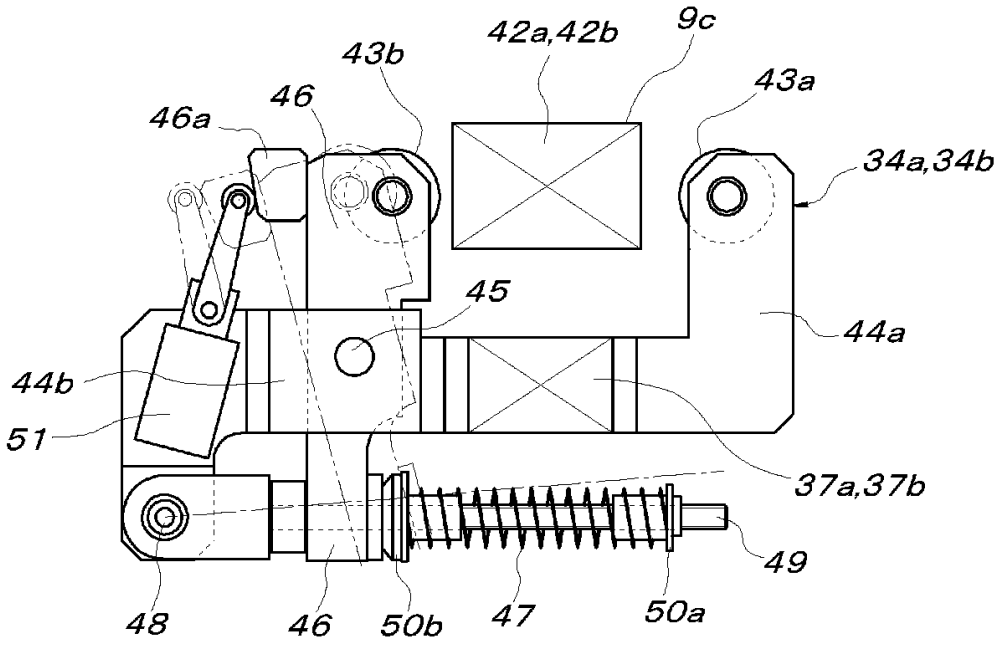
42a,42b
9c
43b
43a
46
46a
34a,34b
45
44a
44b
51
37a,37b
49
48
46
50b
47
50a

[図11]

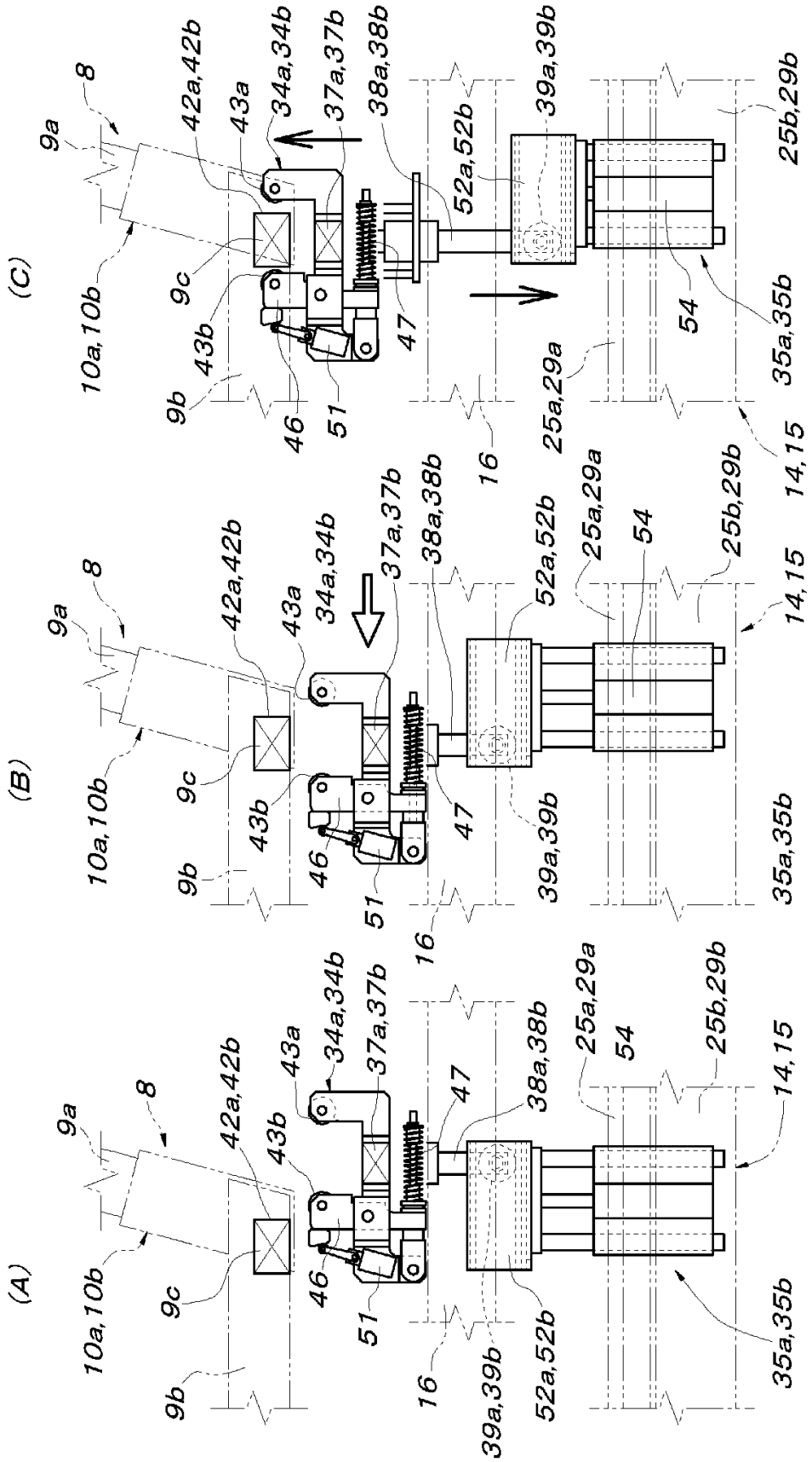
(A)
(B)
(C)
8
9a
9b
9c
10a,10b
14,15
16
25a,29a
25b,29b
34a,34b
35a,35b
37a,37b
38a,38b
39a,39b
42a,42b
43a
43b
46
47
51
52a,52b
54

[図12]

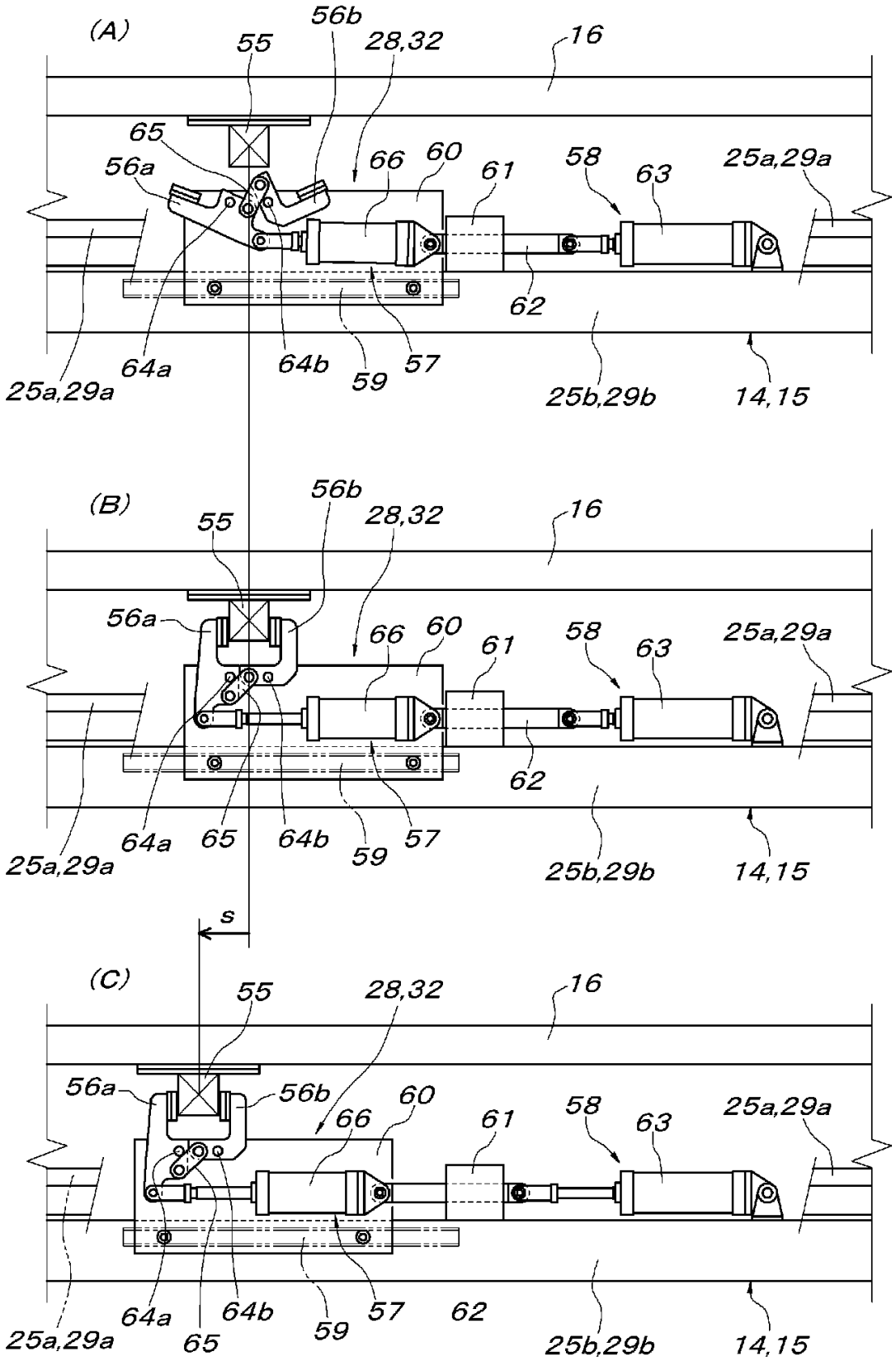
(A)
55
56b
28,32
16
65
56a
66
60
61
58
63
25a,29a
62
64a
64b
59
57
25a,29a
25b,29b
14,15
(B)
55
56b
28,32
16
56a
66
60
61
58
63
25a,29a
62
64a
65
64b
59
57
25a,29a
25b,29b
14,15
s
(C)
55
28,32
16
56a
56b
66
60
61
58
63
25a,29a
64a
64b
59
57
62
25a,29a
65
25b,29b
14,15

INTERNATIONAL SEARCH REPORT

International application No.
PCT/JP2006/314390

A. CLASSIFICATION OF SUBJECT MATTER
B61B10/02(2006.01)i, *B61B13/12*(2006.01)i, *B61J1/10*(2006.01)i, *B65G17/20*(2006.01)i

According to International Patent Classification (IPC) or to both national classification and IPC

B. FIELDS SEARCHED

Minimum documentation searched (classification system followed by classification symbols)
B61B10/00-04, B61B13/12, B61J1/10, B65G17/20, B65G35/00-08, B65G37/00

Documentation searched other than minimum documentation to the extent that such documents are included in the fields searched

Jitsuyo Shinan Koho	1922-1996	Jitsuyo Shinan Toroku Koho	1996-2006
Kokai Jitsuyo Shinan Koho	1971-2006	Toroku Jitsuyo Shinan Koho	1994-2006

Electronic data base consulted during the international search (name of data base and, where practicable, search terms used)

C. DOCUMENTS CONSIDERED TO BE RELEVANT

Category*	Citation of document, with indication, where appropriate, of the relevant passages	Relevant to claim No.
A	JP 6-115426 A (Daifuku Co., Ltd.), 26 April, 1994 (26.04.94), Par. Nos. [0026] to [0041]; Figs. 1 to 7 (Family: none)	1-11
A	JP 8-282836 A (Daifuku Co., Ltd.), 29 October, 1996 (29.10.96), Full text; all drawings (Family: none)	1-11
A	JP 2002-87346 A (Honda Motor Co., Ltd.), 27 March, 2002 (27.03.02), Full text; Figs. 1 to 3, 5 to 7 & US 6695126 B2 & GB 2373766 A & WO 2002/022433 A1 & CA 2390936 A1 & CN 1206125 C	1-11

☒ Further documents are listed in the continuation of Box C. ☐ See patent family annex.

* Special categories of cited documents:
"A" document defining the general state of the art which is not considered to be of particular relevance
"E" earlier application or patent but published on or after the international filing date
"L" document which may throw doubts on priority claim(s) or which is cited to establish the publication date of another citation or other special reason (as specified)
"O" document referring to an oral disclosure, use, exhibition or other means
"P" document published prior to the international filing date but later than the priority date claimed
"T" later document published after the international filing date or priority date and not in conflict with the application but cited to understand the principle or theory underlying the invention
"X" document of particular relevance; the claimed invention cannot be considered novel or cannot be considered to involve an inventive step when the document is taken alone
"Y" document of particular relevance; the claimed invention cannot be considered to involve an inventive step when the document is combined with one or more other such documents, such combination being obvious to a person skilled in the art
"&" document member of the same patent family

Date of the actual completion of the international search 17 October, 2006 (17.10.06)	Date of mailing of the international search report 31 October, 2006 (31.10.06)
Name and mailing address of the ISA/ Japanese Patent Office Facsimile No.	Authorized officer Telephone No.

INTERNATIONAL SEARCH REPORT

International application No.
PCT/JP2006/314390

C (Continuation). DOCUMENTS CONSIDERED TO BE RELEVANT

Category*	Citation of document, with indication, where appropriate, of the relevant passages	Relevant to claim No.
A	JP 2002-19946 A (Honda Motor Co., Ltd.), 23 January, 2002 (23.01.02), Full text; Figs. 1 to 4, 8, 9 (Family: none)	1-11

国際調査報告

国際出願番号　ＰＣＴ／ＪＰ２００６／３１４３９０

Ａ．　発明の属する分野の分類（国際特許分類（ＩＰＣ））

Int.Cl.　B61B10/02(2006.01)i, B61B13/12(2006.01)i, B61J1/10(2006.01)i, B65G17/20(2006.01)i

Ｂ．　調査を行った分野

調査を行った最小限資料（国際特許分類（ＩＰＣ））

Int.Cl.　B61B10/00-04, B61B13/12, B61J1/10, B65G17/20, B65G35/00-08, B65G37/00

最小限資料以外の資料で調査を行った分野に含まれるもの

日本国実用新案公報	１９２２－１９９６年
日本国公開実用新案公報	１９７１－２００６年
日本国実用新案登録公報	１９９６－２００６年
日本国登録実用新案公報	１９９４－２００６年

国際調査で使用した電子データベース（データベースの名称、調査に使用した用語）

Ｃ．　関連すると認められる文献

引用文献のカテゴリー＊	引用文献名　及び一部の箇所が関連するときは、その関連する箇所の表示	関連する請求の範囲の番号
A	JP 6-115426 A（株式会社ダイフク）１９９４．０４．２６，段落【００２６】－【００４１】，図１－７　（ファミリーなし）	１－１１
A	JP 8-282836 A（株式会社ダイフク）１９９６．１０．２９，全文，全図　（ファミリーなし）	１－１１
A	JP 2002-87346 A（本田技研工業株式会社）２００２．０３．２７，全文，図１－３，５－７ & US 6695126 B2 & GB 2373766 A & WO 2002/022433 A1 & CA 2390936 A1 & CN 1206125 C	１－１１

☑　Ｃ欄の続きにも文献が列挙されている。　☐　パテントファミリーに関する別紙を参照。

＊　引用文献のカテゴリー
「Ａ」特に関連のある文献ではなく、一般的技術水準を示すもの
「Ｅ」国際出願日前の出願または特許であるが、国際出願日以後に公表されたもの
「Ｌ」優先権主張に疑義を提起する文献又は他の文献の発行日若しくは他の特別な理由を確立するために引用する文献（理由を付す）
「Ｏ」口頭による開示、使用、展示等に言及する文献
「Ｐ」国際出願日前で、かつ優先権の主張の基礎となる出願の日の後に公表された文献
「Ｔ」国際出願日又は優先日後に公表された文献であって出願と矛盾するものではなく、発明の原理又は理論の理解のために引用するもの
「Ｘ」特に関連のある文献であって、当該文献のみで発明の新規性又は進歩性がないと考えられるもの
「Ｙ」特に関連のある文献であって、当該文献と他の１以上の文献との、当業者にとって自明である組合せによって進歩性がないと考えられるもの
「&」同一パテントファミリー文献

国際調査を完了した日	国際調査報告の発送日
１７．１０．２００６	３１．１０．２００６

国際調査機関の名称及びあて先	特許庁審査官（権限のある職員）	３Ｄ	３４２０
日本国特許庁（ＩＳＡ／ＪＰ） 郵便番号１００－８９１５ 東京都千代田区霞が関三丁目４番３号	落合　弘之 電話番号　０３－３５８１－１１０１　内線　３３４１		

Ｃ（続き）．　関連すると認められる文献

引用文献のカテゴリー＊	引用文献名　及び一部の箇所が関連するときは、その関連する箇所の表示	関連する請求の範囲の番号
A	JP 2002-19946 A（本田技研工業株式会社）２００２．０１．２３，全文，図１－４，８，９　（ファミリーなし）	１－１１

(12) 特許協力条約に基づいて公開された国際出願

(19) 世界知的所有権機関
国際事務局

(43) 国際公開日
2007年2月1日 (01.02.2007)

PCT

(10) 国際公開番号
WO 2007/013348 A1

(51) 国際特許分類:
B61B 10/02 (2006.01) *B61J 1/10* (2006.01)
B61B 13/12 (2006.01) *B65G 17/20* (2006.01)

(21) 国際出願番号: PCT/JP2006/314390

(22) 国際出願日: 2006年7月20日 (20.07.2006)

(25) 国際出願の言語: 日本語

(26) 国際公開の言語: 日本語

(30) 優先権データ:
特願2005-213748 2005年7月25日 (25.07.2005) JP

(71) 出願人 (米国を除く全ての指定国について): 株式会社ダイフク (DAIFUKU CO., LTD.) [JP/JP]; 〒5500012 大阪府大阪市西淀川区御幣島３丁目２番１１号 Osaka (JP).

(72) 発明者; および
(75) 発明者/出願人 (米国についてのみ): 中村 次郎 (NAKAMURA, Jiro) [JP/JP]; 〒5500012 大阪府大阪市西淀川区御幣島３丁目２番１１号 株式会社エイ・ピー・エス内 Osaka (JP).

(74) 代理人: 藤川 忠司 (FUJIKAWA, Tadashi); 〒6600807 兵庫県尼崎市長洲西通１丁目１番２２号 Hyogo (JP).

(81) 指定国 (表示のない限り、全ての種類の国内保護が可能): AE, AG, AL, AM, AT, AU, AZ, BA, BB, BG, BR, BW, BY, BZ, CA, CH, CN, CO, CR, CU, CZ, DE, DK, DM, DZ, EC, EE, EG, ES, FI, GB, GD, GE, GH, GM, HN, HR, HU, ID, IL, IN, IS, KE, KG, KM, KN, KP, KR, KZ, LA, LC, LK, LR, LS, LT, LU, LV, LY, MA, MD, MG, MK, MN, MW, MX, MZ, NA, NG, NI, NO, NZ, OM, PG, PH, PL, PT, RO, RS, RU, SC, SD, SE, SG, SK, SL, SM, SY, TJ, TM, TN, TR, TT, TZ, UA, UG, US, UZ, VC, VN, ZA, ZM, ZW.

(84) 指定国 (表示のない限り、全ての種類の広域保護が可能): ARIPO (BW, GH, GM, KE, LS, MW, MZ, NA, SD, SL, SZ, TZ, UG, ZM, ZW), ユーラシア (AM, AZ, BY, KG, KZ, MD, RU, TJ, TM), ヨーロッパ (AT, BE, BG, CH, CY, CZ, DE, DK, EE, ES, FI, FR, GB, GR, HU, IE, IS, IT, LT, LU, LV, MC, NL, PL, PT, RO, SE, SI, SK, TR), OAPI (BF, BJ, CF, CG, CI, CM, GA, GN, GQ, GW, ML, MR, NE, SN, TD, TG).

[続葉有]

(54) Title: DELIVERY FACILITY FOR TRAVELING BODY FOR TRANSPORTATION

(54) 発明の名称: 搬送用走行体の配送設備

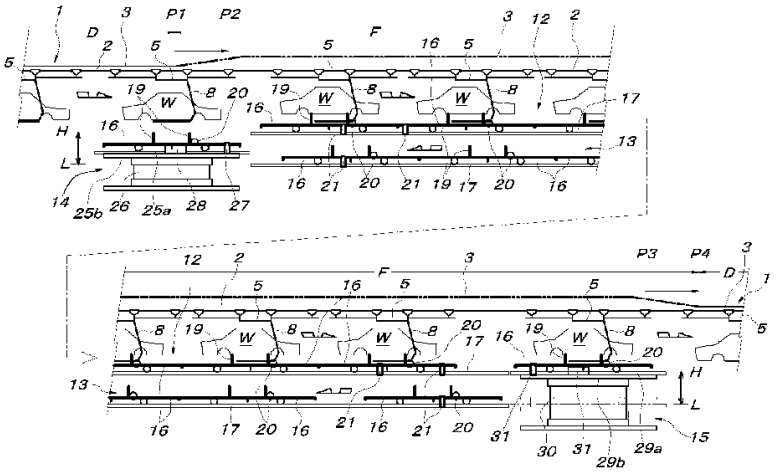

(57) Abstract: A transportation facility in which an object transported while being suspended from a hanger such as a trolley conveyor is transferred on to a carriage of a carriage-type transportation device only for a certain section of a route. At the start point of transportation of the carriage-type transportation device, there is provided an object receiving means (14) at the under side of a traveling route of a traveling body (5) of the conveyor (1). An object support device (19) of the carriage (16) is lifted relative to the hanger (8) of the traveling body, and the object receiving means (14) is caused to receive the object (W) from the hanger. At the end of the transportation is provided an object return means (15) for lowering the object support device relative to the hanger of the traveling body to transfer the object to the hanger. In the transportation route (12) of the carriage-type transportation device, the traveling body is switched to a state in which drive is released and a hanger engagement means (20) of the carriage is engaged with the hanger so that the traveling body can be pulled and moved by the carriage.

[続葉有]

WO 2007/013348 A1

添付公開書類:
— 国際調査報告書

２文字コード及び他の略語については、定期発行される各*PCT*ガゼットの巻頭に掲載されている「コードと略語のガイダンスノート」を参照。

(57) 要約:

トロリーコンベヤなどのハンガーによって吊り下げ搬送される被搬送物を、当該被搬送物に対する作業などのために一定区間だけ台車式搬送装置の台車上に移し換えて搬送できる搬送設備を提供するものであって、トロリーコンベヤ（１）の走行体（５）の走行経路の下側に配設された台車式搬送装置の搬送開始端に、台車（１６）の被搬送物支持具（１９）を走行体のハンガー（８）に対して相対的に上げて当該ハンガーから被搬送物（W）を受け取らせる被搬送物受取手段（１４）が設けられ、搬送終了端には、前記被搬送物支持具を走行体のハンガーに対して相対的に下げて当該ハンガーに被搬送物を移載する被搬送物戻し手段（１５）を備えた搬送設備であって、台車式搬送装置の搬送経路（１２）では、走行体が駆動解除状態に切り換えられると共に台車のハンガー係止手段（２０）がハンガーを係止して当該走行体を台車が牽引移動させるようにした。

明 細 書

搬送用走行体の配送設備

技術分野

[0001] 本発明は、トロリーコンベヤや自走電車に設けられたハンガーによって吊り下げ搬送される被搬送物を一定区間だけ台車式搬送装置の台車上に移し換えて搬送する搬送設備に関するものである。

背景技術

[0002] 例えば自動車の組立ラインでは、トロリーコンベヤの走行体や自走電車に設けられたハンガーで吊り下げ搬送される車体にエンジンやドアーなどを組み付ける作業が行われるが、この場合、ハンガーで支持された車体に対する部品組み付け作業を台車式搬送装置の台車上で行うことが知られている。このような場合に使用できる搬送設備としては、例えば特許文献1に記載されるように、車体を支持するハンガーを備えた走行体(プッシャーで駆動されるトロリーコンベヤの走行体)を床側の搬送装置と同期させて走行させ、床側の搬送装置上から前記ハンガーで吊り下げ搬送される車体に対する部品組み付け作業などを行うように構成された搬送設備や、特許文献2に記載された搬送設備のように、ハンガーで吊り下げ搬送される被搬送物を、当該ハンガーを備えたトロリーコンベヤの走行体や自走電車と同期走行する台車式搬送装置の台車上に移し替え、当該台車上での作業終了後に再び台車上の車体をハンガーに戻すように構成された搬送設備が知られている。

特許文献1:特公平4－5581号公報

特許文献2:特開平7－157073号公報

発明の開示

発明が解決しようとする課題

[0003] しかしながら、上記のような従来周知の搬送設備では、作業完了までの間、車体などの被搬送物を吊り下げ搬送する被搬送物吊下式搬送装置(トロリーコンベヤの走行体や自走電車)と作業者が搭乗して作業を行う台車式搬送装置(台車)とを同期運転する必要があり、両搬送装置の制御に高度の技術を必要とするばかりでなく、特許

文献1に記載されたような搬送設備を使用するときは、被搬送物を吊り下げるハンガーが邪魔になるような場所に対する部品組み付け作業が行えない。

課題を解決するための手段

[0004] 本発明は上記のような従来の問題点を解消し得る搬送設備を提供することを目的とするものであって、請求項1に記載の本発明に係る搬送設備は、後述する実施形態の参照符号を括弧付きで付して示すと、被搬送物吊下式搬送装置（P＆F形式のトロリーコンベヤ(1)）と、台車式搬送装置(11)と、被搬送物受取手段(14)と、被搬送物戻し手段(15)とを備えた搬送設備であって、前記被搬送物吊下式搬送装置（P＆F形式のトロリーコンベヤ(1)）は、被搬送物支持用ハンガー(8)が設けられた走行体(5)を備えると共に、この走行体(5)の走行経路中には、当該走行体(5)を強制走行させる駆動区間(D)と、当該走行体(5)を移動自由な状態とする駆動解除区間(F)とが設けられ、前記台車式搬送装置(11)は、前記走行体(5)の走行経路の駆動解除区間(F)の下側で当該走行経路に沿って走行可能な台車(16)を備えると共に、当該台車(16)上には被搬送物支持具(19)が設けられ、前記被搬送物受取手段(14)は、前記台車式搬送装置(11)の搬送開始端において前記被搬送物支持具(19)を前記走行体(5)のハンガー(8)に対して相対的に上げて当該ハンガー(8)から被搬送物(W)を前記被搬送物支持具(19)に移載する手段であり、前記被搬送物戻し手段(15)は、前記台車式搬送装置(11)の搬送終了端において前記被搬送物支持具(19)を前記走行体(5)のハンガー(8)に対して相対的に下げて当該被搬送物支持具(19)からハンガー(8)に被搬送物(W)を移載する手段である搬送設備において、

前記被搬送物吊下式搬送装置（P＆F形式のトロリーコンベヤ(1)）の走行体(5)の被搬送物支持用ハンガー(8)には、被係止部(42a)が設けられ、前記台車式搬送装置(11)の台車(16)には、前記ハンガー(8)の被係止部(42a)に対し係脱自在なハンガー係止手段(20)が設けられ、前記台車式搬送装置(11)の搬送経路(12)では、前記ハンガー係止手段(20)が前記ハンガー(8)の被係止部(42a)と係合し、駆動解除状態に切り換えられている前記被搬送物吊下式搬送装置（P＆F形式のトロリーコンベヤ(1)）の走行体(5)を前記台車(16)が前記ハンガー(8)を介して牽引移動させる構成となっている。

[0005] 上記構成の本発明を実施するについて、前記被搬送物吊下式搬送装置は、走行用駆動手段を備えているが特定区間では自由に前後に遊動させることができる駆動解除状態とすることができる自走電車に被搬送物支持用ハンガー(8)を吊り下げたものでも良いが、請求項2に記載のように、前記被搬送物吊下式搬送装置は、その走行体(5)の走行経路に沿って移動するプッシャーで当該走行体(5)を推進させるトロリーコンベヤ(1)により構成し、前記駆動解除区間(F)では、前記トロリーコンベヤ(1)の走行体(5)がプッシャーから切り離されて駆動解除状態に切り換えられるように構成することができる。

[0006] 前記被搬送物受取手段(14)及び被搬送物戻し手段(15)は、台車(16)に対して被搬送物支持具(19)を昇降させる構成によって実現することもできるが、請求項3に記載のように、台車(15)自体を昇降させる昇降ガイドレール(25a,29a)によって構成することができる。

[0007] ハンガー(8)から台車(16)上(被搬送物支持具(19)上)に移載された被搬送物(W)に対する部品組み込み作業などの作業部位(Wa)がハンガー(8)と重なるような場合、即ち、被搬送物(W)から切り離されたハンガー(8)が作業の邪魔になるような場合は、当該ハンガー(8)と台車(16)上の被搬送物(W)とを前後方向に所定距離だけ相対移動させれば良いが、この場合、請求項4に記載のように、前記ハンガー係止手段(20)を、前記台車式搬送装置(11)の搬送開始端においてハンガー(8)から被搬送物(W)を受け取った被搬送物支持具(19)と当該ハンガー(8)とが相対的に一定距離前後方向に移動したときにハンガー(8)側の被係止部(42a)に対応する位置に設け、前記台車式搬送装置(11)の搬送終了端においては、被搬送物(W)を支持する被搬送物支持具(19)とハンガー(8)とを元の前後方向相対位置に戻した後、前記被搬送物戻し手段(15)を動作させるように構成すれば良い。この場合の前記台車式搬送装置(11)の搬送開始端及び搬送終了端における被搬送物支持具(19)とハンガー(8)との相対的前後方向移動は、例えば、請求項5に記載のように台車(16)そのものを前後方向に移動させることによって実現できるが、その他、台車(16)に対して当該台車(16)上の被搬送物支持具(19)を前後方向に移動させる方法や、定位置にある台車(16)に対してハンガー(8)(当該ハンガー(8)を備えたトロリーコンベヤ(1)の走行体(5)や当該ハンガー(8)を

備えた自走電車など)を前後方向に移動させる方法によっても実現できる。

[0008] 前記台車式搬送装置(11)は、先に説明したように自走可能な電車を利用したものであっても良いが、自走できない台車(16)を台車走行経路側に配設された台車駆動手段(摩擦駆動手段(21))により推進させる構成のものである場合は、請求項6に記載のように、前記被搬送物受取手段(14)には、台車(16)を搬送経路(12)側へ送り出す台車送り出し手段(台車引き込み送り出し手段(27))と、支持する台車(16)を、前記ハンガー係止手段(20)がハンガー(8)の被係止部(42a)に対応する位置まで前後方向に移動させる台車用フィーダー(28)とを設け、前記被搬送物戻し手段(15)には、搬送経路(12)から送り込まれる台車(16)を所定位置まで引き込む台車引き込み手段(台車引き込み送り出し手段(31))と、支持する被搬送物(W)とハンガー(8)とが元の前後方向相対位置に戻るように台車(16)を前後方向に復帰移動させる台車用フィーダー(32)とを設けることができる。この場合、請求項7に記載のように、前記台車用フィーダー(28,32)は、台車(16)に設けられた被把持部(55)を前後から挟持する前後一対の開閉挟持片(56a,56b)と、この開閉挟持片(56a,56b)の開閉用駆動手段(57)と、前記開閉挟持片(56a,56b)を前後方向に往復移動させる移動用駆動手段(58)とから構成することができる。

[0009] 前記被搬送物吊下式搬送装置(トロリーコンベヤ(1))のハンガーは、当該ハンガー(8)が支持する被搬送物(W)を台車(16)側の被搬送物支持具(19)で下から受け取らせることができる構成のものであれば、如何なる構成のものでも良いが、自動車組立ラインなどで使用される車体支持用ハンガーとして一般的なハンガー、即ち、左右横方向に開閉する左右一対のハンガーアーム(10a,10b)を備えたものであるときは、請求項8に記載のように、前記ハンガー係止手段(20)は、左右各ハンガーアーム(10a,10b)に設けられた被係止部(42a,42b)に対し係脱自在な左右一対の係止具(34a,34b)と、この左右一対の係止具(34a,34b)を連動させて係脱動作させる1つの係止具位置切り換え手段(35a)又は(35b)とから構成することができる。この場合、請求項9に記載のように、前記左右一対の係止具(34a,34b)は、スプリング(40a,40b)により被係止部(42a,42b)に係合する上位置に付勢保持させると共に、各係止具(34a,34b)それぞれに連動昇降するカム従動ローラー(39a,39b)を台車(16)側に設け、前記係止具位置切り換え

手段(35a)又は(35b)は前記被搬送物受取手段(14)及び被搬送物戻し手段(15)の位置に台車(16)があるときに当該台車(16)側の前記カム従動ローラー(39a,39b)と係合するように前記被搬送物受取手段(14)及び被搬送物戻し手段(15)にそれぞれ併設されたカムレール(52a,52b)と、これらカムレール(52a,52b)を昇降させるカムレール駆動手段(シリンダーユニット(54))とから構成することができる。更にこの場合、請求項10に記載のように、前記左右一対の係止具(34a,34b)は、左右横向きに配置され且つ中間に支点を有する左右一対のシーソー運動体(37a,37b)の外端にそれぞれ設け、両シーソー運動体(37a,37b)の内端に昇降体(38a,38b)を連動連結すると共に当該昇降体(38a,38b)の下端に前記カム従動ローラー(39a,39b)を軸支することができる。

[0010] 又、前記ハンガー係止手段(20)を、前記ハンガー(8)に設けられた被係止部(42a)に対し上下方向に嵌合離脱自在な係止具(34a)と、この係止具(34a)を昇降移動させる係止具位置切り換え手段(35a)又は(35b)とから構成する場合、請求項11に記載のように、前記係止具(34a)は、前記被係止部(42a)を挟む前後一対の係止部(43a,43b)を備えたものとし、この前後一対の係止部(43a,43b)の内、被係止部(42a)を後押しする後側係止部(43b)は、一定範囲内前後移動自在に構成すると共にスプリング(47)により前側定位置に付勢保持させ、当該後側係止部(43b)が前記スプリング(47)に抗して後方に移動したことを検知するためのセンサー(51)を併設することができる。

発明の効果

[0011] 上記請求項1に記載の本発明に係る搬送設備によれば、被搬送物吊下式搬送装置の被搬送物支持用ハンガーによって吊り下げ搬送している被搬送物に対し部品組み付け作業などを行う区間の床側に台車式搬送装置を設置し、この台車式搬送装置の搬送開始端に対応する定位置で被搬送物吊下式搬送装置の走行体(ハンガー)を停止させた状態で当該搬送開始端に配設された被搬送物受取手段を動作させることにより、前記ハンガーに支持されていた被搬送物を前記台車式搬送装置の台車上に乗り移らせ、台車式搬送装置の搬送終了端までは前記台車の被搬送物支持具で支持させた状態で被搬送物を搬送させることができるので、当該被搬送物に対する部品組み付け作業などを前記台車上で容易に行うことができるのであるが、このとき、被搬送物をそれまで支持していた空のハンガーは前記台車が備えるハンガ

一係止手段で当該台車と一体化させ、台車の走行により空のハンガーを介して被搬送物吊下式搬送装置の走行体(ハンガー)を牽引走行させることができる。従って、被搬送物を台車側に移載している間、被搬送物吊下式搬送装置の走行体(ハンガー)を台車と同期させて前進走行させるための手段や制御が全く不要になり、搬送設備全体の構成を簡略化して大幅なコストダウンを図ることができる。

[0012] 勿論、台車式搬送装置の搬送終了端まで台車によって搬送した被搬送物は、当該搬送終了端で被搬送物戻し手段の動作により台車に牽引されてきた被搬送物吊下式搬送装置の走行体(ハンガー)側に戻し、以降はこの被搬送物吊下式搬送装置の走行体(ハンガー)によって吊り下げ搬送させることができるのであるが、このときも被搬送物を台車側から受け取る被搬送物吊下式搬送装置の走行体(ハンガー)は当該台車とハンガー係止手段で一体化されていたのであるから、両者間の被搬送物の移載が安全確実に行えるように、台車とは切り離されて走行していた被搬送物受取側の走行体(ハンガー)を台車側に対して位置合わせする必要がなく、台車式搬送装置の搬送終了端での当該台車式搬送装置から被搬送物吊下式搬送装置への安全確実な被搬送物の戻し作業も容易に行わせることができる。

[0013] 尚、請求項2に記載の構成によれば、走行体走行体の走行経路に沿って移動するプッシャーで当該走行体を推進させるトロリーコンベヤを被搬送物吊下式搬送装置に活用して、本発明の搬送設備を容易に実施することができる。又、請求項3に記載の構成によれば、被搬送物受取手段及び被搬送物戻し手段を、台車に対して被搬送物支持具を昇降させる構成によって実現する場合よりも、数多く必要な台車の構成がシンプルになり、本発明の搬送設備を容易且つ安価に実施することができるばかりでなく、台車式搬送装置の台車による搬送経路の下側を空台車の戻し経路に構成した場合に必要な、台車式搬送装置の搬送開始端及び搬送終了端に必要な台車昇降手段(昇降ガイドレール)で前記被搬送物受取手段及び被搬送物戻し手段を兼ねさせることができる。

[0014] 又、台車式搬送装置の台車上に被搬送物を移載した後の空になったハンガーをそのままの位置で台車にハンガー係止手段で一体化したのでは、当該被搬送物に対する部品組み込み作業などの作業対象箇所が空になったハンガーと重なって作業

の邪魔になるような場合には、請求項4に記載の構成を採用することにより、当該被搬送物の作業対象箇所を空になったハンガーから前後方向に離して、空になったハンガーに邪魔されることなく当該被搬送物の作業対象箇所に対する作業を容易に行うことができる。この場合、請求項5に記載の構成によれば、請求項4に記載の構成を簡単容易に実施することができる。

[0015] 前記台車式搬送装置が、自走できない台車を台車走行経路側に配設された台車駆動手段により推進させる構成のものである場合は、請求項6や請求項7に記載の構成を採用することにより、請求項5に記載の構成を含めて本発明を簡単容易に実施することができる。

[0016] 前記被搬送物吊下式搬送装置のハンガーが、自動車組立ラインなどで使用される車体支持用ハンガーとして一般的なハンガー、即ち、左右横方向に開閉する左右一対のハンガーアームを備えたものであるときは、請求項8に記載の構成を採用することにより、左右一対のハンガーアームの何れか片側のハンガーアームのみを台車側にハンガー係止手段で係止一体化させる場合よりも、ハンガーを介して被搬送物吊下式搬送装置の走行体を台車で牽引させる作用を無理なく確実に行わせることができる。しかも、左右一対のハンガーアームを各別に係止する左右一対の係止具を1つの係止具位置切り換え手段により係止作用位置と係止解除位置とに切り換えることができるので、各係止具ごとに係止具位置切り換え手段を設ける場合よりも制御が簡単になる。

[0017] 上記の請求項8に記載の構成を採用する場合、請求項9に記載のように実施することにより、台車式搬送装置の台車による搬送経路の全域にわたって前記左右一対の係止具を位置切り換え手段で係止作用位置に保持する必要がなく、前記左右一対の係止具を係止作用位置に切り換えたり係止解除位置に切り換えたりするための手段として、前記被搬送物受取手段及び被搬送物戻し手段の位置にのみカムレールと当該カムレールを昇降させるカムレール駆動手段とを配設しておくだけで良いので、台車側に前記左右一対の係止具を位置切り換えのための駆動源を設けなければならない場合よりも、容易且つ安価に本発明を実施することができる。更にこの場合、請求項10に記載の構成によれば、前記左右一対の係止具はハンガーの左右一対

のハンガーアームに対応させて台車の左右両側に配設しながら、両係止具に連動する左右一対の昇降するカム従動ローラーは台車の左右巾方向の中央側に寄せて配設することができ、前記被搬送物受取手段及び被搬送物戻し手段の位置に各カム従動ローラーに対応して配設される左右一対のカムレールを一体化し、1つのカムレール駆動手段で一体に昇降駆動することが容易になる。

[0018] 又、請求項11に記載の構成によれば、ハンガー係止手段で台車に係止一体化したハンガーを介して被搬送物吊下式搬送装置の走行体を台車で牽引している状況において、被搬送物吊下式搬送装置の走行体が何らかの原因で円滑な走行が行えない事態に陥り、台車に対してハンガー側が大きな抵抗になった場合、センサーで係る事態を速やかに検知させることができるので、当該センサーの検知信号に基づいて台車の推進駆動に非常停止をかけるなど、必要な対策を自動的にとらせることが容易に行える。

図面の簡単な説明

[0019] [図1]本発明の搬送設備の全体の構成を説明する概略側面図である。

[図2]被搬送物受取手段で吊下搬送されてきた被搬送物を受け取る直前の状態を説明する側面図である。

[図3]図2の状態から1段階進んだ状態を説明する側面図である。

[図4]図3の状態から1段階進んだ状態を説明する側面図である。

[図5]図4の状態から1段階進んだ状態を説明する側面図である。

[図6]被搬送物受取手段から台車式搬送装置の搬送経路へ台車が送り出されるときの状態を説明する側面図である。

[図7]被搬送物戻し手段での作用を説明する側面図である。

[図8]被搬送物受取手段及び被搬送物戻し手段の構成を説明する正面図である。

[図9]ハンガー係止手段の構成を説明する図で、A図は係止作用状態にあるハンガー係止手段を示す正面図、B図は係止解除状態にあるハンガー係止手段を示す正面図である。

[図10]ハンガー係止手段の係止具の具体的構成を説明する側面図である。

[図11]A図～C図はハンガー係止手段の各段階での状態を説明する側面図である。

[図12]A図～C図は台車用フィーダーの各段階での状態を説明する側面図である。

符号の説明

[0020] 1　パワー＆フリー形式のトロリーコンベヤ(被搬送物吊下式搬送装置)

2　フリーライン

3　パワーライン

4, 4a　トロリー

5　走行体

6　被動用ドッグ

8　被搬送物支持用ハンガー

9c　ハンガーアームの被搬送物支持部

10a, 10b　左右一対のハンガーアーム

11　台車式搬送装置

12　搬送経路

13　台車戻り経路

14　被搬送物受取手段

15　被搬送物戻し手段

16　台車

19　被搬送物支持具

20　ハンガー係止手段

21　摩擦駆動手段

22a, 22b　左右一対の帯状垂直摩擦面

23　モーター駆動の摩擦駆動輪

24　バックアップローラー

25a、29a　昇降ガイドレール

25b, 29b　昇降台

26, 30　昇降用駆動手段

27, 31　台車引き込み送り出し手段

28, 32　台車用フィーダー

34a, 34b　左右一対の係止具

35a, 35b　係止具位置切り換え手段

37a, 37b　シーソー運動体

38a, 38b　左右一対の棒状昇降体

39a, 39b　カム従動ローラー

40a, 40b　引張スプリング

42a, 42b　ハンガーの被係止部

43a, 43b　前後一対の係止部(ローラー)

44a　L形アーム部

44b　軸受け部材

46　レバーアーム

47　スプリング

51　過負荷検知用センサー

52a, 52b　左右一対のカムレール

54　カムレール駆動手段(シリンダーユニット)

55　台車側の被把持部

56a, 56b　前後一対の開閉挟持片

57　開閉用駆動手段

58　移動用駆動手段

60　可動部材

61　スライドガイド

62　中継ロッド

63, 66　シリンダーユニット

65　リンク

D　トロリーコンベヤの駆動区間

F　トロリーコンベヤの駆動解除区間

W　被搬送物

発明を実施するための最良の形態

[0021] 以下に本発明の具体的実施例を添付図に基づいて説明すると、図1及び図2において、1は被搬送物吊下式搬送装置として本実施形態で使用した従来周知のパワー&フリー形式のトロリーコンベヤであり、下側ガイドレールで構成されるフリーライン2と上側ガイドレールで構成されたパワーライン3とを備え、フリーライン2には、複数のトロリー4，4aを介して走行体5が走行可能に吊り下げられ、パワーライン3の上側ガイドレールには、前記走行体5の先頭のトロリー4aに設けられた被動用ドッグ6に係脱自在なプッシャーを適当間隔おきに備えた駆動用チエンがトロリーを介して吊り下げられ、フリーライン2とパワーライン3との上下間隔が、パワーライン3側のプッシャーがフリーライン2側の走行体5の被動用ドッグ6に係合し得る間隔に設定されている駆動区間Dでは、前記走行体5がプッシャーによりフリーライン2に沿って推進せしめられ、フリーライン2とパワーライン3との上下間隔が上記間隔よりも広くなるか又はフリーライン2上からパワーライン3が横側方に離れる駆動解除区間Fでは、プッシャーによる前記走行体5の駆動が解除され、当該走行体5がフリーライン2上で停止し、フリーライン2に併設された位置決め手段がなければフリーライン2上で自由に遊動できる状態になる。

[0022] 尚、図1に仮想線で示した駆動解除区間Fにおけるパワーライン3は、フリーライン2から上方に離間させてあり、当該駆動解除区間Fの下手側の駆動区間Dで再び元の高さに戻されるように構成しているが、当該駆動解除区間Fにおけるパワーライン3を横側方に迂回させることもできるし、当該駆動解除区間Fの下手側の駆動区間Dで使用されるパワーライン3として、駆動解除区間Fの上手側の駆動区間Dで使用されるパワーライン3とは別の駆動手段で駆動される別系統のパワーライン3を使用することもできる。

[0023] トロリーコンベヤ1の走行体5には被搬送物支持用ハンガー8が吊り下げられている。このハンガー8は、図2及び図8に示すように、左右一対のハンガーアーム10a，10bから成るもので、各ハンガーアーム10a，10bは、縦杆部9aと当該縦杆部9aの下端からほぼ水平後方に延出する水平杆部9b、及び水平杆部9bから内向きに連設された被搬送物支持部9cから構成されている。自動車の車体などの被搬送物Wは、図8に示すように、正面から見て両ハンガーアーム10a，10bの縦杆部9aの内側に納ま

る状態で、その底部の左右両側辺が両ハンガーアーム10a，10bの被搬送物支持部9cで支持される。尚、両ハンガーアーム10a，10bは被搬送物Wの積み下ろしのために左右横方向に開閉運動可能に構成されている。

[0024] 図1において、11は台車式搬送装置であって、トロリーコンベヤ1の駆動解除区間Fにおけるフリーライン2の直下で当該フリーライン2と平行に配設された搬送経路12、当該搬送経路12の下側に当該搬送経路12と平行に配設された台車戻り経路13、搬送経路12の搬送開始端に配設された被搬送物受取手段14、及び搬送経路12の搬送終了端に配設された被搬送物戻し手段15から構成され、複数台の台車16が被搬送物受取手段14から搬送経路12、被搬送物戻し手段15、台車戻り経路13をこの順に経由して被搬送物受取手段14に戻るように循環走行するものである。而して各台車16は、1つの被搬送物Wより適当長さだけ全長が長いもので、搬送経路12や台車戻り経路13側のガイドレール17に車輪18を介して直進走行可能に支持され、被搬送物支持具19とハンガー係止手段20とを備えたものであるが、走行用駆動手段は設けられておらず、走行経路脇に配設された摩擦駆動手段21（図1参照）から受ける推進力によって走行する。摩擦駆動手段21は、図8に示すように、被搬送物受取手段14や被搬送物戻し手段15に併設される台車引き込み送り出し手段27，31と同様に、台車16の走行方向と平行で台車16の全長にわたって連続するように台車16に設けられた左右一対の帯状垂直摩擦面22a，22b（図示例では、台車16の左右両側面をそのまま利用している）の内、一方の摩擦面22aに圧接するモーター駆動の摩擦駆動輪23と、他方の摩擦面22bに当接するバックアップローラー24との組み合わせから構成されている。

[0025] 上記の摩擦駆動手段21は、図1に示すように台車式搬送装置11の搬送経路12や台車戻り経路13の適当位置に必要に応じて制動手段などと共に配設され、搬送経路12では、被搬送物受取手段14からこの搬送経路12内に送り出される台車16を引き継いで、直後の台車16が直前の台車16を後押しする前後突き合いの状態で搬送経路12の終端まで定速で推進させ、被搬送物戻し手段15が台車受入可能になったときに搬送経路12の終端から当該被搬送物戻し手段15へ台車16を1台ずつ送り出すように構成され、台車戻り経路13では、被搬送物戻し手段15からこの台車戻り経

路13内に送り出される台車16を引き継いで被搬送物受取手段14側へ高速走行させ、被搬送物受取手段14が台車受入可能になったときに台車戻り経路13の終端から当該被搬送物受取手段14へ台車16を1台ずつ送り出すように構成されている。

[0026] 被搬送物受取手段14は、図2に示すように、1台の台車16を支持し得る長さの昇降ガイドレール25aが敷設された昇降台25bと、この昇降台25bを、昇降ガイドレール25aが搬送経路12のガイドレール17の始端に接続する上昇限レベルHと昇降ガイドレール25aが台車戻り経路13のガイドレール17の終端に接続する下降限レベルLとの間で昇降させる昇降用駆動手段26とから構成され、昇降台25bには、台車引き込み送り出し手段27と台車用フィーダー28とが搭載されている。被搬送物戻し手段15は、図7に示すように、1台の台車16を支持し得る長さの昇降ガイドレール29aが敷設された昇降台29bと、この昇降台29bを、昇降ガイドレール29aが搬送経路12のガイドレール17の終端に接続する上昇限レベルHと昇降ガイドレール29aが台車戻り経路13のガイドレール17の始端に接続する下降限レベルLとの間で昇降させる昇降用駆動手段30とから構成され、昇降台29bには、台車引き込み送り出し手段31と台車用フィーダー32とが搭載されている。昇降用駆動手段26, 30には、クロスリンク機構方式やラックピニオンギヤ方式、シリンダーによる直接昇降駆動方式など、従来周知の各種方式のものが利用される。

[0027] 各台車16に設けられたハンガー係止手段20は、図8及び図9に示すように、左右一対の係止具34a, 34bと、両係止具34a, 34bを係止作用上位置と係止解除下位置とに切り換える係止具位置切り換え手段35a, 35bとから構成されている。而して、左右一対の係止具34a, 34bは、左右対称形に配置されると共に中央部が前後方向水平支軸36a, 36bで台車16側に軸支された左右一対のシーソー運動体37a, 37bの外端に設けられ、各シーソー運動体37a, 37bの内端には、台車16側に昇降のみ可能に支持された左右一対の棒状昇降体38a, 38bの上端部がそれぞれ長孔とピンとを介して連結され、これら両棒状昇降体38a, 38bの下端外側にはカム従動ローラー39a, 39bが左右方向水平支軸で軸支され、各シーソー運動体37a, 37bの内端側と台車16側との間に掛張された引張スプリング40a, 40bにより、各シーソー運動体37a, 37bの内端側が台車16側のストッパー41a, 41bで受け止められるように各

シーソー運動体37a，37bが付勢されている。従って、両カム従動ローラー39a，39bに下向きの操作力が働いていない状況では、各係止具34a，34bが係止作用上位置に保持されると共に両棒状昇降体38a，38bが上昇限まで上昇して両カム従動ローラー39a，39bが上昇限に同心状で位置する状態にある。

[0028] 左右一対の係止具34a，34bは、図10に示すように、被搬送物支持用ハンガー8の左右一対のハンガーアーム10a，10bにおける被搬送物支持部9cの基部で構成された被係止部42a，42bを前後から挟む前後一対の係止部43a，43bから構成されている。これら各係止部43a，43bは、各係止具34a，34bが係止作用上位置にあるとき（シーソー運動体37a，37bが水平姿勢にあるとき）に左右方向水平向きとなる支軸で軸支されたローラーから構成され、搬送経路12における台車走行方向側に位置する前側係止部43aのローラーは、シーソー運動体37a，37bの外端から連設されたL形アーム部44aの先端に軸支され、ハンガー8を後押しする後側係止部43bのローラーは、シーソー運動体37a，37bの外端から連設された軸受け部材44bに前記ローラーを軸支する支軸と平行な支軸45で中間位置が軸支されたレバーアーム46の上端に軸支されて、前側係止部43aのローラーに対して遠近方向（前後方向）に一定範囲内で移動可能に構成され、前記レバーアーム46の下端部を押圧付勢するスプリング47により、前側係止部43aのローラーとの間に被係止部42a，42bが相対的に嵌入する凹部を形成する位置に付勢保持されている。尚、前記スプリング47は、軸受け部材44bの先端に支軸48で軸支され且つレバーアーム46の下端部を貫通する軸杆49の遊端部に螺嵌されたバネ受け座50aと、当該軸杆49に軸方向遊動自在に遊嵌された可動バネ受け座50bとの間で軸杆49に遊嵌され、可動バネ受け座50を介してレバーアーム46の下端部を付勢する。

[0029] 上記構成の左右一対の係止具34a，34bには、過負荷検知用センサー51がそれぞれ併設されている。このセンサー51は、軸受け部材44bに取り付けられたリミットスイッチから構成されたもので、各係止具34a，34bにおけるレバーアーム46の上端外側に付設された当接部材46aを介して、当該レバーアーム46（後側係止部43b）がスプリング47の付勢力に抗して一定角度揺動したことを検知する。

[0030] 係止具位置切り換え手段35aは、図2に示すように被搬送物受取手段14の昇降台

26に設けられ、係止具位置切り換え手段35bは、図7に示すように被搬送物戻し手段15の昇降台31に設けられており、各係止具位置切り換え手段35a，35bは、台車16が被搬送物受取手段14の昇降ガイドレール25又は被搬送物戻し手段15の昇降ガイドレール30の定位置に乗り移ったとき、図8及び図9に示すように、当該台車16の両カム従動ローラー39a，39bが各別に嵌合する左右一対のカムレール52a，52bと、両カムレール52a，52bを支持する1つの昇降台53を昇降駆動するカムレール駆動手段（シリンダーユニット）54とから構成されている。

[0031] 被搬送物受取手段14の昇降台25bに設けられた台車用フィーダー28と被搬送物戻し手段15の昇降台29bに設けられた台車用フィーダー32とは、図8及び図12に示すように、台車16の底部の左右一側部に下向きに突設された被把持部55を前後から挟持する前後一対の開閉挟持片56a，56bと、この開閉挟持片56a，56bの開閉用駆動手段57と、前記開閉挟持片56a，56bを前後方向に往復移動させる移動用駆動手段58とから構成されている。具体的に説明すると、前後一対の開閉挟持片56a，56bと開閉用駆動手段57とは、昇降台25b，29bに付設されたスライドガイドレール59を介して昇降ガイドレール25a，29a上での台車16の前後移動方向に移動自在に支持された可動部材60に取り付けられ、移動用駆動手段58は、前記可動部材60に一端が連結され且つ昇降台25b，29bに付設されたスライドガイド61によって前後方向移動自在に支持された中継ロッド62の他端と昇降台25b，29bとの間に介装されたシリンダーユニット63によって構成されている。

[0032] 前後一対の開閉挟持片56a，56bは、それぞれ支軸64a，64bによって前記可動部材60に軸支されると共に、リンク65によって互いに連動して開閉運動するように連動連結され、一方の開閉挟持片56aと前記可動部材60との間に、開閉用駆動手段57を構成するシリンダーユニット66が介装されている。従って、シリンダーユニット66のピストンロッドの出し入れにより前後一対の開閉挟持片56a，56bを開閉動作させることができ、シリンダーユニット63のピストンロッドの出し入れにより、前後一対の開閉挟持片56a，56bを開閉用駆動手段57（シリンダーユニット66）と共に前後移動させることができる。

[0033] 以下、上記構成の搬送設備の使用方法について説明すると、トロリーコンベヤ1の

駆動区間Dを駆動解除区間Fに向かって走行する走行体5、即ち、ハンガー8により被搬送物Wを吊り下げた走行体5は、図1及び図2に示す駆動区間Dの終端位置（駆動解除区間Fの始端位置）P1で駆動解除されるので、フリーライン2に併設された適当な補助フィーダー（図示省略）により、被搬送物受取手段14の上方定位置にハンガー8が位置する定停止位置P2まで移動させる。勿論、トロリーコンベヤ1の駆動区間Dの終端位置P1で走行体5を精度良く停止させることができるならば、前記駆動区間Dの終端位置P1を被搬送物受取手段14に対する定停止位置P2の位置に設定して、前記補助フィーダーを無くすことも可能である。

[0034] 一方、被搬送物受取手段14では、昇降台25bを下降限レベルLに下降させ、台車式搬送装置11における台車戻り経路13のガイドレール17上から被搬送物受取手段14における昇降ガイドレール25a上の定位置まで1台の空台車16を、台車戻り経路13の終端に併設されている摩擦駆動手段21と前記昇降台25b側の台車引き込み手段27とで移載させる。台車戻り経路13上の空台車16のハンガー係止手段20は、その左右一対の係止具34a，34bが、図9に示すスプリング40a，40bの付勢力で係止作用上位置に保持されている状態であるから、当該空台車16を引き込む側の被搬送物受取手段14側では、昇降台25bに配設されている係止具位置切り換え手段35aのカムレール52a，52bをカムレール駆動手段（シリンダーユニット）54により下降限レベルまで下げておき、昇降ガイドレール25a上に引き込まれる空台車16のハンガー係止手段20における左右一対のカム従動ローラー39a，39bを係止具位置切り換え手段35aのカムレール52a，52b内に進入させる（図9A参照）。そして空台車16が定位置まで引き込まれて停止したならば、係止具位置切り換え手段35aのカムレール52a，52bをカムレール駆動手段（シリンダーユニット）54により上昇限レベルまで上昇させ、カム従動ローラー39a，39bを介してシーソー運動体37a，37bをスプリング40a，40bの付勢力に抗して揺動させることにより、左右一対の係止具34a，34bを係止解除下位置に切り換えておく（図9B参照）。尚、図1に示すように、空台車16が定位置に移載された被搬送物受取手段14の昇降台25bは、下降限レベルLと上昇限レベルHとの間の中間レベルまで上昇させた状態で待機させておくことができる。

[0035] 先に述べたように、トロリーコンベヤ1の走行体5が被搬送物受取手段14に対する定停止位置P2で停止したならば、図3に示すように、空台車16を定位置に支持している被搬送物受取手段14の昇降台25bを上昇限レベルHまで上昇させる。この結果、空台車16の被搬送物支持具19が走行体5のハンガー8に支持されていた被搬送物Wを持ち上げ、当該被搬送物Wをハンガー8から所定高さdだけ浮上させることになる。このとき、係止解除下位置に切り換えられているハンガー係止手段20の左右一対の係止具34a，34bは、図11Aに示すように、被搬送物Wを支持していたハンガー8の被係止部42a，42bよりも一定距離だけ前方で且つ下方位置にある。又、被搬送物受取手段14の昇降台25bに配設されている台車用フィーダー28は、図12Aに示すように前後一対の開閉挟持片56a，56bが、当該昇降ガイドレール25a上の定位置に停止した台車16の被把持部55の真下位置で前後に開いた状態（シリンダーユニット66のピストンロッドが引き込まれた状態）にある。

[0036] 昇降ガイドレール25a上の台車16で走行体5のハンガー8から被搬送物Wを受け取らせたならば、図12Bに示すように、台車用フィーダー28におけるシリンダーユニット66のピストンロッドを進出させて前後一対の開閉挟持片56a，56bを閉動させることにより、被搬送物Wを支持している台車16の被把持部55を前後一対の開閉挟持片56a，56bで前後から挟持させる。係る状態で移動用駆動手段58のシリンダーユニット63により可動部材60を一定距離sだけ後方に移動させることにより、図4に示すように、当該台車16を昇降ガイドレール25a上で後方に一定距離sだけ移動させる。このとき、ハンガー係止手段20が台車16に設けられているので、図4及び図11Bに示すように、係止解除下位置に切り換えられているハンガー係止手段20の左右一対の係止具34a，34bもハンガー8に対して後方へ一定距離sだけ移動し、当該左右一対の係止具34a，34bがハンガー8の被係止部42a，42bの真下位置に位置することになる。而して、当該係止具34a，34bと一体に後方に移動するカム従動ローラー39a，39bは、昇降台25b側にあって後方には移動しないカムレール52a，52b内を移動することになるが、この移動によってカム従動ローラー39a，39bがカムレール52a，52b内からは離脱しないように、当該カムレール52a，52bの長さが設定されている。従って、係る状態で係止具位置切り換え手段35aのカムレール52a，52bをカムレ

ール駆動手段(シリンダーユニット)54により下降限レベルまで下降させ、カム従動ローラー39a, 39bを介して台車16側のシーソー運動体37a, 37bをスプリング40a, 40bの付勢方向に水平姿勢まで揺動復帰させることにより(図9A参照)、左右一対の係止具34a, 34bを係止解除下位置から係止作用上位置に切り換えて、図5及び図11Cに示すように、各係止具34a, 34bをハンガー8の被係止部42a, 42bに係止させる。即ち、各係止具34a, 34bの前後一対の係止部(ローラー)43a, 43b間にハンガー8の被係止部42a, 42bを嵌合させる。

[0037] 被搬送物受取手段14における上記の一連の動作により、図2に示すように、トロリーコンベヤ1のハンガー8で支持されて吊下搬送されていた被搬送物Wは、当該ハンガー8に対して持ち上げられると共に後方に一定距離sだけ移動せしめられた状態で台車16の被搬送物支持具19に支持され、被搬送物Wの支持から開放されたハンガー8は、ハンガー係止手段20を介して台車16に係止されることになる。従って、当該被搬送物Wの左右両側の作業部位(例えば自動車車体に対する前側左右両ドアーの取付部位)Waが、当該被搬送物Wがトロリーコンベヤ1のハンガー8で支持されて吊下搬送されていたときに当該ハンガー8の左右一対のハンガーアーム10a, 10bにおける縦杆部9aと横から見て重なる位置にあったとしても、この被搬送物Wがハンガー8から台車16上に移載された最終段階では、図5に示すように前記作業部位Waは、当該被搬送物Wの左右両側に位置するハンガー8の左右一対のハンガーアーム10a, 10bにおける縦杆部9aから横から見て後方に外れた位置に移動したことになる。換言すれば、このような結果となるように被搬送物受取手段14上での台車用フィーダー28による台車16の後方への移動距離sが設定されている。

[0038] 次に、台車用フィーダー28におけるシリンダーユニット66のピストンロッドを引き込み移動させて前後一対の開閉挟持片56a, 56bを開動させ、当該開閉挟持片56a, 56bを台車16側の被把持部55より下側レベルに逃がした後、直ちに、又はこの後の適当な時期に、移動用駆動手段58のシリンダーユニット63により可動部材60を一定距離sだけ前方に移動復帰させ、この台車用フィーダー28を元の待機状態に戻す。前記のように開閉挟持片56a, 56bを開動させて台車16側の被把持部55より下側レベルに逃がしたならば、図6に示すように、この被搬送物受取手段14における昇降

ガイドレール25a上の台車16を台車引き込み送り出し手段27により搬送経路12のガイドレール17上に送り出すと共に当該搬送経路12が備える摩擦駆動手段21により当該搬送経路12上で定速走行駆動することにより、被搬送物支持具19で支持する被搬送物Wを搬送経路12上で定速搬送すると共に、当該被搬送物Wの支持から開放された状態のハンガー8を備えたトロリーコンベヤ1の走行体5を、当該ハンガー8とハンガー係止手段20とを介して、台車16が走行する搬送経路12と平行な駆動解除区間Fのフリーライン2に沿って当該台車16により牽引移動させることができる。この状態において、例えば被搬送物Wの左右両側の作業部位Waに対する作業を、当該被搬送物Wと一体に移動するトロリーコンベヤ1の走行体5のハンガー8に邪魔されることなく、台車16上に搭乗した作業者によって遂行させることができる。

[0039] 上記の台車式搬送装置11における台車16での被搬送物Wの搬送過程において、ハンガー係止手段20により当該台車16に係止されて牽引されるトロリーコンベヤ1側の走行体5やハンガー8に何らかの障害が発生し、これら走行体5又はハンガー8の円滑な前進移動が妨げられるような事態が生じたときは、台車16側のハンガー係止手段20に過負荷が生じる。この過負荷は、ハンガー係止手段20における左右一対の係止具34a，34bを構成する後側係止部43bに後方向きに作用するので、結果として、後側係止部43bがスプリング47の付勢力に抗して後方に傾動し、この傾動をセンサー51が検知することになるので、当該センサー51の検知信号を利用して、当該台車16に非常停止をかけるなどの安全対策が自動的に講じられるように構成することができる。

[0040] トロリーコンベヤ1により吊下搬送される後続の各被搬送物Wも上記の一連の動作により被搬送物受取手段14において台車式搬送装置11の台車16上に移載すると共に、当該被搬送物Wを吊下搬送していたトロリーコンベヤ1の走行体5もハンガー8を介して台車16に係止し、吊下搬送していた被搬送物Wと一体に台車16により台車式搬送装置11の搬送経路12上に順次送り込み、各台車16が前後に突き合う状態で定速搬送させ、その間に各台車16上の被搬送物Wに対して所定の作業を遂行させることができる。

[0041] 台車式搬送装置11の搬送経路12の終端に達した台車16は、被搬送物戻し手段1

5の昇降ガイドレール29a上に移載させる。即ち、図7に示すように、被搬送物戻し手段15の昇降台29bを昇降駆動手段30により上昇限レベルHまで上昇させ、昇降ガイドレール28aを台車式搬送装置11の搬送経路12のガイドレール17に接続させておく。そして台車式搬送装置11の搬送経路12の終端の摩擦駆動手段21で昇降ガイドレール29a上に台車16が送り出されたならば、昇降台29b側の台車引き込み送り出し手段31により当該台車16を昇降ガイドレール29a上の定位置まで引き込み、停止させる。このとき、図1及び図7に示すように、当該台車16にハンガー係止手段20で係止されて牽引されてきたトロリーコンベヤ1の走行体5(ハンガー8)は、トロリーコンベヤ1における駆動解除区間Fの終端位置(駆動区間Dの始端位置)P4より一定距離だけ上手側の定停止位置P3で停止することになる。又、ハンガー8を係止しているハンガー係止手段20のカム従動ローラー39a, 39bは、昇降台29b側の係止具位置切り換え手段35bの下降限位置に下げられているカムレール52a, 52b内に進入し、昇降台29b側の台車用フィーダー32の前後一対の開閉挟持片56a, 56bは、後退限位置(シリンダーユニット63のピストンロッドが引き込まれた位置)にあって且つ開動した状態にあり、台車16側の被把持部55は、当該開動した状態にある前後一対の開閉挟持片56a, 56b間の真上で停止することになる。

[0042] 被搬送物Wを支持すると共に当該被搬送物Wから切り離されたハンガー8を介してトロリーコンベヤ1の走行体5を牽引移動させてきた台車16が被搬送物戻し手段15の台車引き込み送り出し手段31により昇降ガイドレール29a上の定位置まで引き込まれて停止したならば、次に、図7に示すように、昇降台29b側の係止具位置切り換え手段35bのカムレール52a, 52bをシリンダーユニット54により上昇限まで上昇させ、当該カムレール52a, 52bに進入しているカム従動ローラー39a, 39bを押し上げてシーソー運動体37a, 37bをスプリング40a, 40bの付勢力に抗して傾動させ、以て、左右一対の係止具34a, 34bを係止作用上位置から係止解除下位置に切り換え、ハンガー8における左右一対のハンガーアーム10a, 10bの被係止部42a, 42bから下方に離脱させる(図9B及び図11B参照)。このようにして台車16からハンガー8を切り離した状態で、次に昇降台29b側の台車用フィーダー32の前後一対の開閉挟持片56a, 56bを開閉用駆動手段57のシリンダーユニット66により閉動させ、真上位置

で停止している台車16の被把持部55を挟持させ、続いて当該台車用フィーダー32の移動用駆動手段58のシリンダーユニット63により当該開閉挟持片56a，56bを一定距離sだけ前進移動させる。この結果、支持している被搬送物Wと共に台車16が一定距離sだけ昇降ガイドレール29a上で前進移動し、当該台車16が支持している被搬送物Wが、定停止位置P3で停止したままのトロリーコンベヤ1の走行体5におけるハンガー8に対して一定距離sだけ前進移動することになる。

[0043] 上記の被搬送物戻し手段15での一連の動作により、被搬送物Wとハンガー8との前後方向の相対位置関係が、トロリーコンベヤ1における走行体5のハンガー8から台車式搬送装置11の台車16に移し替られる以前の状態、即ち、トロリーコンベヤ1で吊下搬送されているときのハンガー8と被搬送物Wとの前後方向相対位置関係に戻されたことになる。係る状態で、次に台車用フィーダー32の開閉挟持片56a，56bを開動させ、台車16の被把持部55に対する挟持を解除した後、この被搬送物戻し手段15の昇降駆動手段30により昇降台29b（昇降ガイドレール29a）を上昇限レベルHから下降限レベルLまで降下させると、これに伴って下降する台車16の被搬送物支持具19で支持されていた被搬送物Wが下降途中でハンガー8の左右一対のハンガーアーム10a，10bにおける被搬送物支持部9cに乗り移り、当該ハンガー8で支持される状態に戻される。一方、昇降ガイドレール29a上の空になった台車16は、昇降台29bが下降限レベルLに達して台車式搬送装置11の台車戻り経路13のガイドレール17と接続する状態になった昇降ガイドレール29a上から、当該昇降台29b側の台車引き込み送り出し手段31と台車戻り経路13側の摩擦駆動手段21とにより台車戻り経路13内に送り出されると共に当該台車戻り経路13上で被搬送物受取手段14に向けて搬送される。

[0044] 台車16の下降により当該台車16から切り離されてハンガー8上に戻された被搬送物Wは、当該ハンガー8を備えた走行体5、即ち、定停止位置P3で停止しているトロリーコンベヤ1の走行体5を、トロリーコンベヤ1における駆動解除区間Fの終端位置（駆動区間Dの始端位置）P4までフリーライン2に沿って併設された適当な補助フィーダーにより移動させることにより、トロリーコンベヤ1のパワーライン3を移動するプッシャーにより駆動解除区間Fの下手側の駆動区間Dにおいて再び推進させ、被搬送物

Wを吊下搬送することができる。このときの被搬送物Wとハンガー8との間の前後方向相対位置関係は、駆動解除区間Fの入り口で台車式搬送装置11の台車16に移し替られる以前の状態と同一であることは明らかである。尚、定停止位置P3を駆動解除区間Fの下手側の駆動区間Dに入った位置に設定し、当該定停止位置P3で停止した走行体5の被動ドッグ6を適当な操作手段で下げておくなどして、当該定停止位置P3で停止した走行体5の被動ドッグ6には駆動区間Dにおけるパワーライン3のプッシャーが作用しないように構成し、ハンガー8への被搬送物Wの戻し作用が完了した時点で下げられていた被動ドッグ6を復帰させるなどして、当該定停止位置P3から直ちにトロリーコンベヤ1のパワーライン3を移動するプッシャーにより走行体5を推進させるようにして、定停止置P3から走行体5を所定位置まで移動させる補助フィーダーを無くすこともできる。

[0045] 本発明は以上の実施形態のように実施できるものであるが、台車式搬送装置11の台車16上での被搬送物Wに対する作業部位Waが、当該被搬送物Wを吊下搬送してきたトロリーコンベヤ1の走行体5におけるハンガー8から離れた位置であって、当該作業部位Waに対する作業に前記ハンガー8が邪魔にならない位置であるときは、台車16上に移載された被搬送物Wと当該被搬送物Wを支持していたハンガー8とを前後方向に相対移動させる手段及び行程は省くことができる。

産業上の利用可能性

[0046] 本発明に係る搬送設備は、例えば自動車のボディーにドアーなどの各種部品を取り付ける自動車組み立てラインにおける自動車ボディーの搬送設備として利用できる。

請求の範囲

[1] 被搬送物吊下式搬送装置と、台車式搬送装置と、被搬送物受取手段と、被搬送物戻し手段とを備えた搬送設備であって、

前記被搬送物吊下式搬送装置は、被搬送物支持用ハンガーが設けられた走行体を備えると共に、この走行体の走行経路中には、当該走行体を強制走行させる駆動区間と、当該走行体を移動自由な状態とする駆動解除区間とが設けられ、

前記台車式搬送装置は、前記走行体の走行経路の駆動解除区間の下側で当該走行経路に沿って走行可能な台車を備えると共に、当該台車上には被搬送物支持具が設けられ、

前記被搬送物受取手段は、前記台車式搬送装置の搬送開始端において前記被搬送物支持具を前記走行体のハンガーに対して相対的に上げて当該ハンガーから被搬送物を前記被搬送物支持具に移載する手段であり、

前記被搬送物戻し手段は、前記台車式搬送装置の搬送終了端において前記被搬送物支持具を前記走行体のハンガーに対して相対的に下げて当該被搬送物支持具からハンガーに被搬送物を移載する手段である搬送設備において、

前記被搬送物吊下式搬送装置の走行体の被搬送物支持用ハンガーには、被係止部が設けられ、

前記台車式搬送装置の台車には、前記ハンガーの被係止部に対し係脱自在なハンガー係止手段が設けられ、

前記台車式搬送装置の搬送経路では、前記ハンガー係止手段が前記ハンガーの被係止部と係合し、駆動解除状態に切り換えられている前記被搬送物吊下式搬送装置の走行体を前記台車が前記ハンガーを介して牽引移動させるように構成されている搬送設備。

[2] 前記被搬送物吊下式搬送装置は、その走行体の走行経路に沿って移動するプッシャーで当該走行体を推進させるトロリーコンベヤにより構成され、

前記走行体の駆動解除区間では、前記プッシャーが走行体から切り離されて駆動解除状態に切り換えられるように構成された、請求項1に記載の搬送設備。

[3] 前記被搬送物受取手段及び被搬送物戻し手段は、前記台車式搬送装置の台車

自体を昇降させる昇降台によって構成されている、請求項1に記載の搬送設備。

[4] 前記ハンガー係止手段は、前記台車式搬送装置の搬送開始端においてハンガーから被搬送物を受け取った被搬送物支持具と当該ハンガーとが相対的に一定距離前後方向に移動したときにハンガー側の被係止部に対応する位置に設けられ、

前記台車式搬送装置の搬送終了端においては、被搬送物を支持する被搬送物支持具とハンガーとを元の前後方向相対位置に戻した後、前記被搬送物戻し手段を動作させるように構成された、請求項1に記載の搬送設備。

[5] 前記台車式搬送装置の搬送開始端及び搬送終了端における被搬送物支持具とハンガーとの相対的前後方向移動が、前記台車自体の前後方向移動により行われるように構成された、請求項4に記載の搬送設備。

[6] 前記台車式搬送装置は、自走できない台車を搬送経路側に配設された台車駆動手段により推進させる構成のものであり、

前記被搬送物受取手段には、台車を搬送経路側へ送り出す台車送り出し手段と、支持する台車を、前記ハンガー係止手段がハンガーの被係止部に対応する位置まで前後方向に移動させる台車用フィーダーとが設けられ、

前記被搬送物戻し手段には、搬送経路から送り込まれる台車を所定位置まで引き込む台車引き込み手段と、支持する被搬送物とハンガーとが元の前後方向相対位置に戻るように台車を前後方向に復帰移動させる台車用フィーダーとが設けられている、請求項5に記載の搬送設備。

[7] 前記被搬送物受取手段と前記被搬送物戻し手段の台車用フィーダーは、台車に設けられた被把持部を前後から挟持する前後一対の開閉挟持片と、この開閉挟持片の開閉用駆動手段と、前記開閉挟持片を前後方向に往復移動させる移動用駆動手段とから構成されている、請求項6に記載の搬送設備。

[8] 前記ハンガーは左右一対のハンガーアームを備え、

前記ハンガー係止手段は、左右各ハンガーアームに設けられた被係止部に対し係脱自在な左右一対の係止具と、この左右一対の係止具を連動させて係脱動作させる1つの係止具位置切り換え手段とから構成されている、請求項1に記載の搬送設備。

[9] 前記左右一対の係止具は、ハンガー側の被係止部に係合する上位置にスプリング

により付勢保持され、

前記台車には、各係止具それぞれに連動して昇降するカム従動ローラーが設けられ、

前記係止具位置切り換え手段は、前記被搬送物受取手段及び被搬送物戻し手段の位置に台車があるときに当該台車側の前記カム従動ローラーと係合するように前記被搬送物受取手段及び被搬送物戻し手段にそれぞれ併設されたカムレールと、これらカムレールを昇降させるカムレール駆動手段とから構成されている、請求項8に記載の搬送設備。

[10] 前記左右一対の係止具は、左右横向きに配置され且つ中間に支点を有する左右一対のシーソー運動体の外端にそれぞれ設けられ、両シーソー運動体の内端に昇降体が連動連結されると共に当該昇降体の下端に前記カム従動ローラーが軸支されている、請求項9に記載の搬送設備。

[11] 前記ハンガー係止手段は、前記ハンガーに設けられた被係止部に対し上下方向に嵌合離脱自在な係止具と、この係止具を昇降移動させる係止具位置切り換え手段と、センサーとから成り、

前記係止具は、前記被係止部を挟む前後一対の係止部を備え、この前後一対の係止部の内、被係止部を後押しする後側係止部は、一定範囲内前後移動自在に構成されると共にスプリングにより前側定位置に付勢保持され、

前記センサーは、前記後側係止部が前記スプリングに抗して後方に移動したことを検知する、請求項1に記載の搬送設備。

[図1]

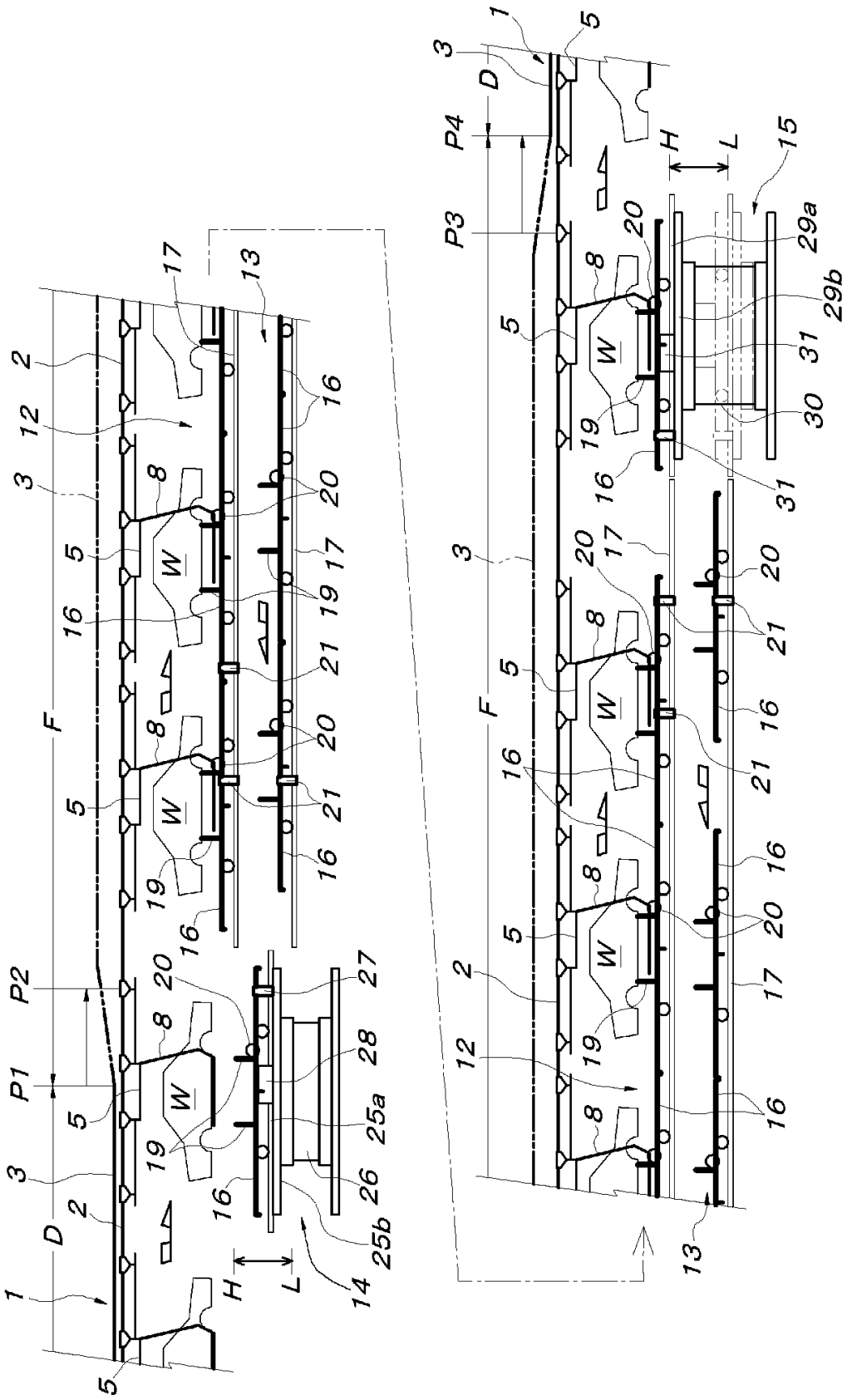
1
2
3
5
8
12
13
14
15
16
17
19
20
21
25a
25b
26
27
28
29a
29b
30
31
W
D
F
H
L
P1
P2
P3
P4

[図2]

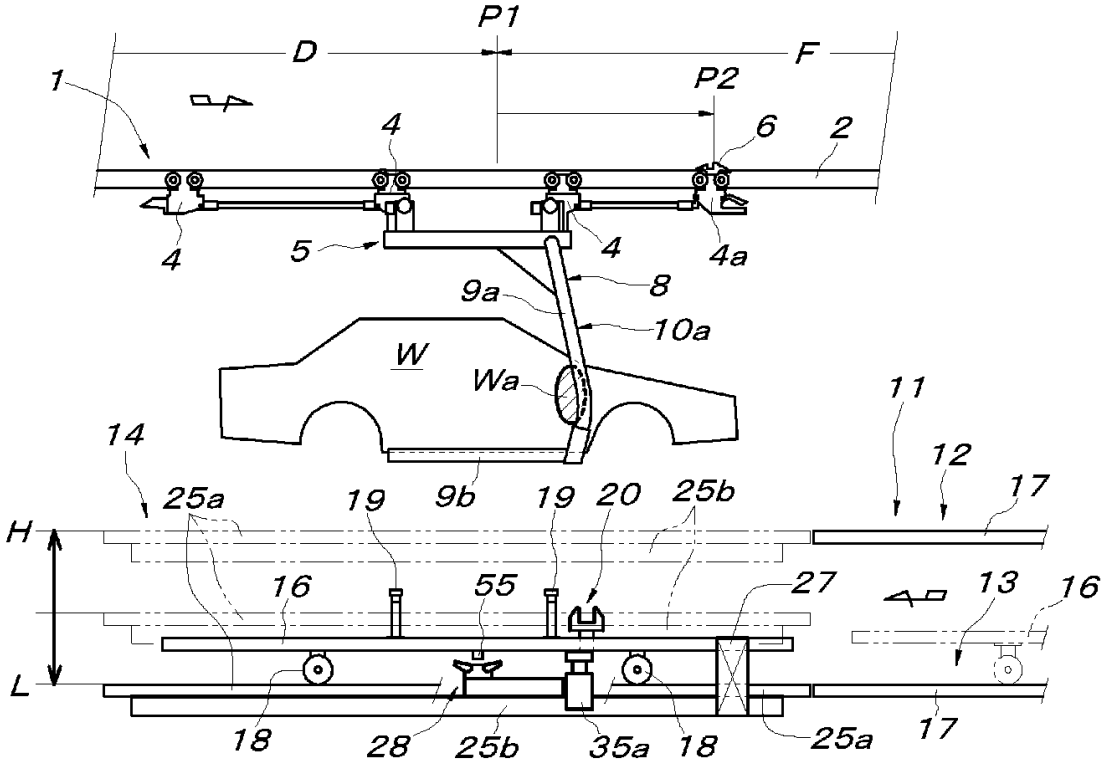
P1
D
F
1
P2
4
6
2
4
5
4
4a
9a
8
10a
W
Wa
11
14
12
25a
19
9b
19
20
25b
17
H
16
55
27
13
16
L
18
28
25b
35a
18
25a
17

[図3]

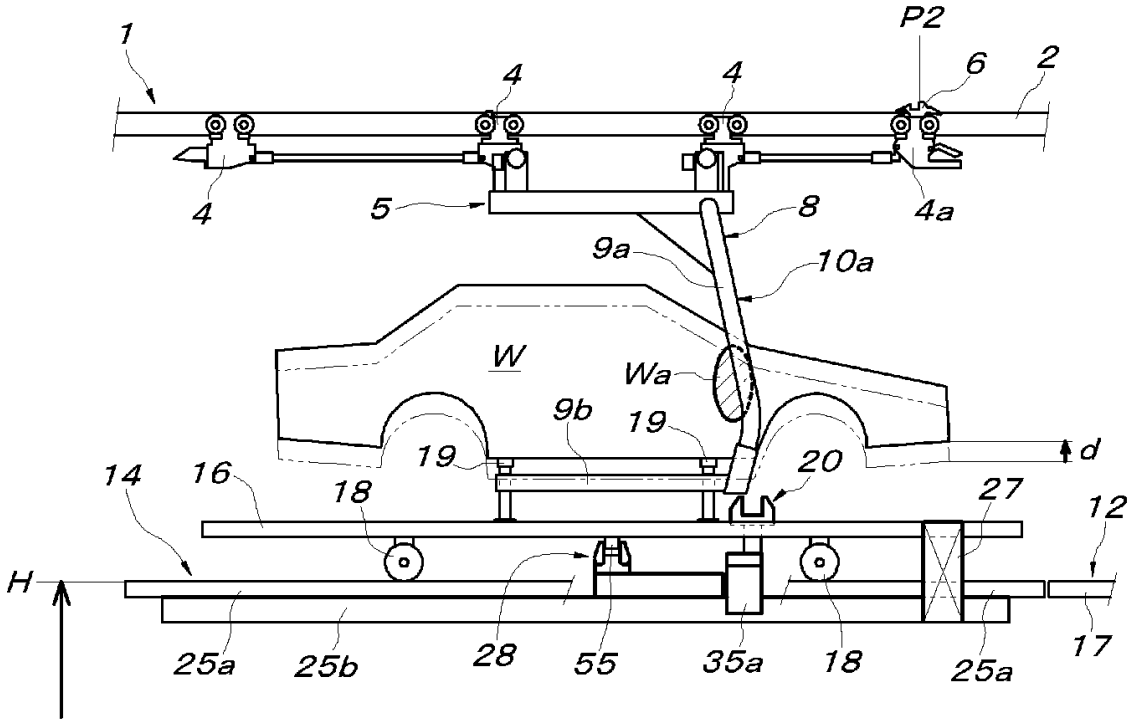
1
P2
4
4
6
2
4
5
8
4a
9a
10a
W
Wa
9b
19
19
d
14
16
18
20
27
12
H
25a
25b
28
55
35a
18
25a
17

[図4]

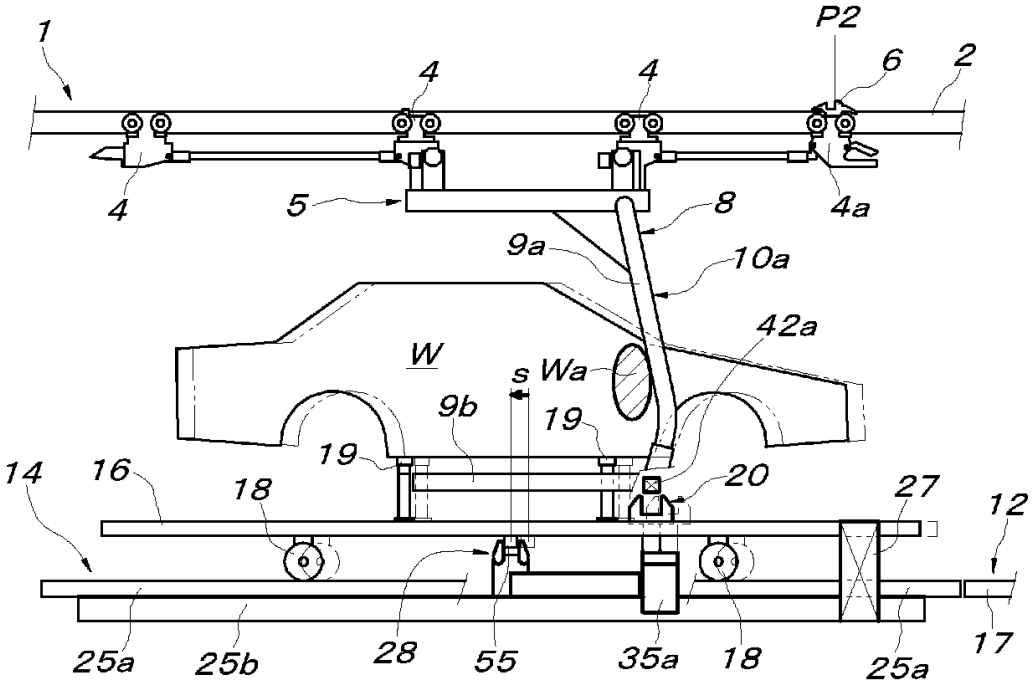
1
P2
6
2
4
4
4
5
8
4a
9a
10a
42a
W
s
Wa
9b
19
19
20
14
16
18
27
12
25a
25b
28
55
35a
18
25a
17

[図5]

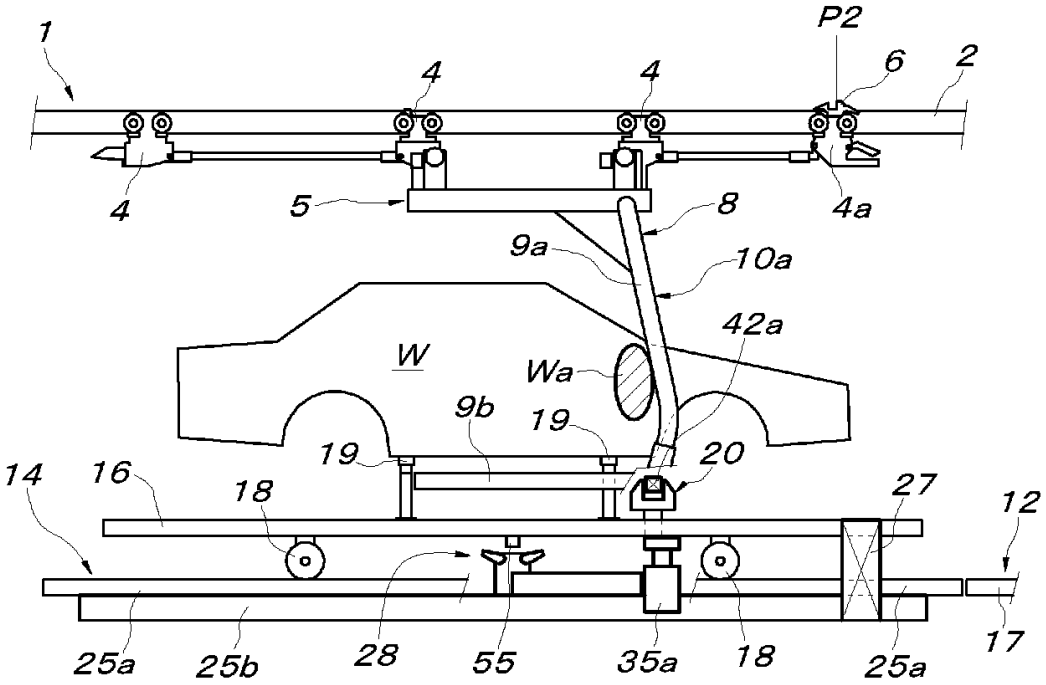
1
P2
6
2
4
4
4
5
8
4a
9a
10a
42a
W
Wa
9b
19
19
20
14
16
18
27
12
25a
25b
28
55
35a
18
25a
17

[図6]

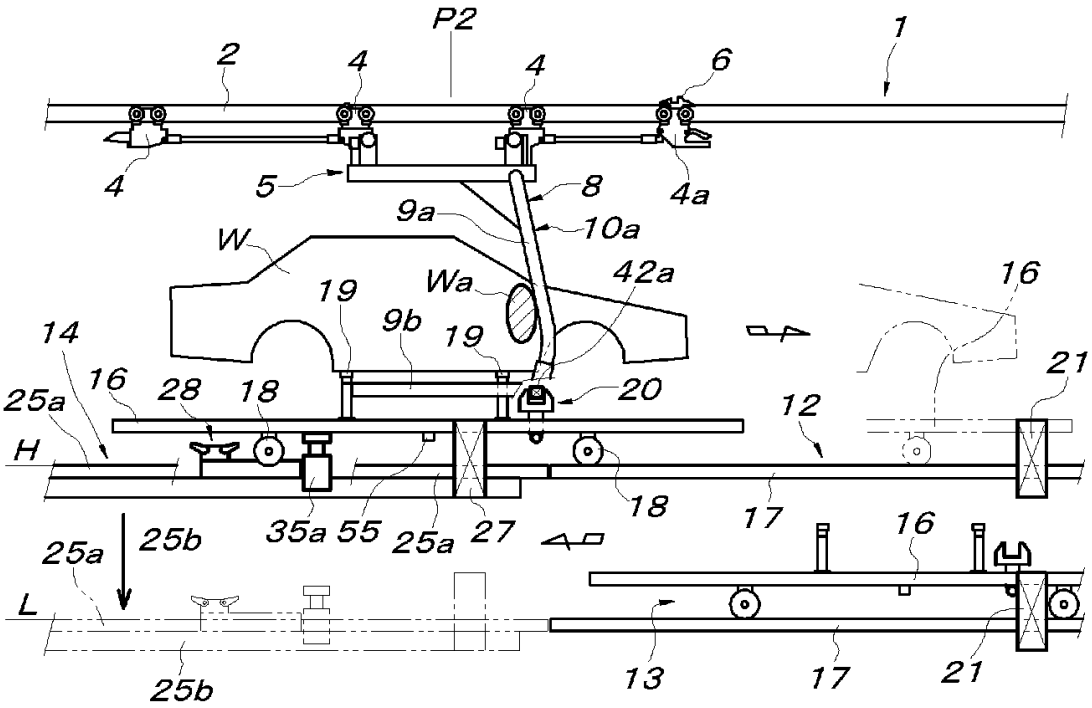
P2
1
2
4
4
6
4
5
8
4a
9a
10a
W
Wa
42a
16
19
9b
19
14
16
28
18
20
21
25a
12
H
18
35a
55
25a
27
17
16
25a
25b
L
13
17
21
25b

[図7]

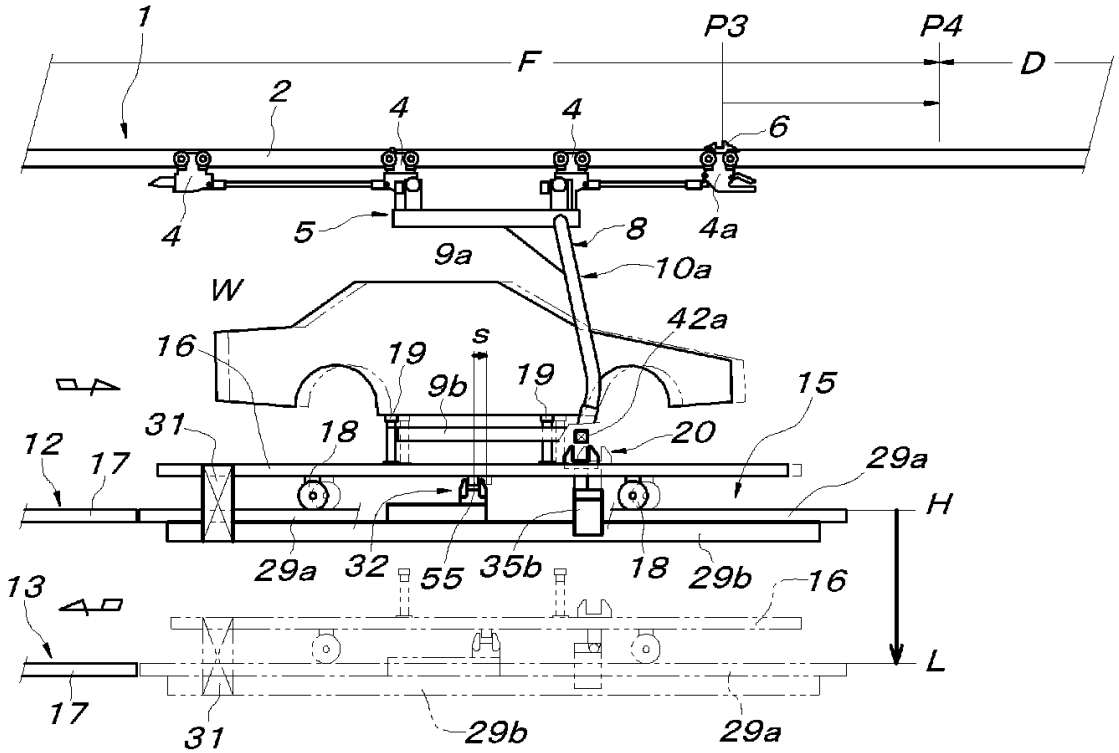
1
P3
P4
F
D
2
4
4
6
4
5
8
4a
9a
10a
W
42a
16
19
s
9b
19
15
31
18
20
12
17
29a
H
29a
32
55
35b
18
29b
16
13
L
17
31
29b
29a

[図8]

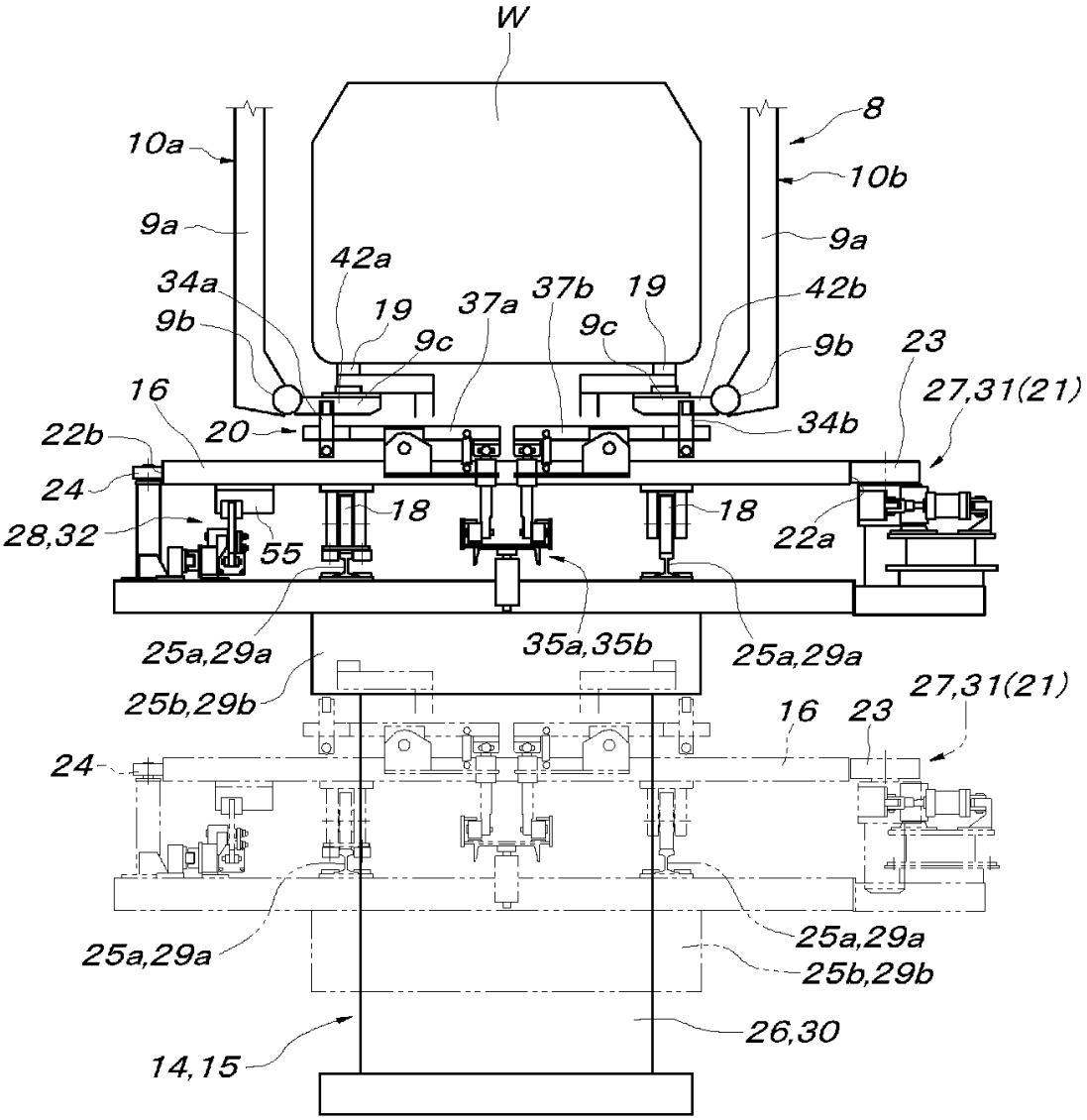
W
8
10a
10b
9a
9a
42a
34a
19
37a
37b
19
42b
9b
9c
9c
9b
23
16
27,31(21)
22b
20
34b
24
18
18
28,32
55
22a
25a,29a
35a,35b
25a,29a
25b,29b
27,31(21)
16
23
24
25a,29a
25a,29a
25b,29b
26,30
14,15

[図9]

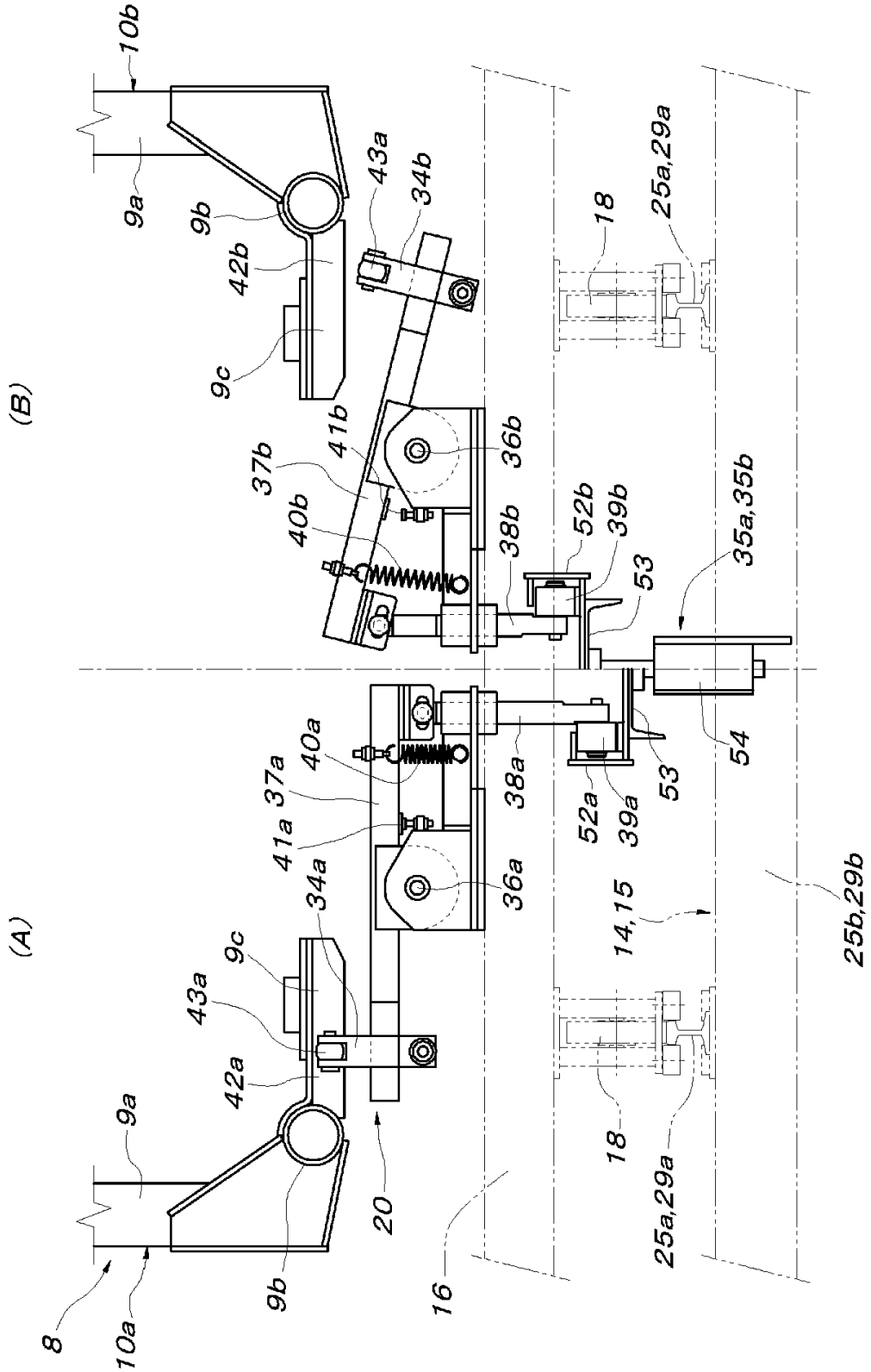
(A)
(B)
8
10a
9a
9b
9c
42a
43a
34a
20
16
37a
41a
40a
36a
38a
52a
39a
53
54
14,15
18
25a,29a
25b,29b
10b
42b
43a
34b
37b
41b
40b
36b
38b
52b
39b
35a,35b

[図10]

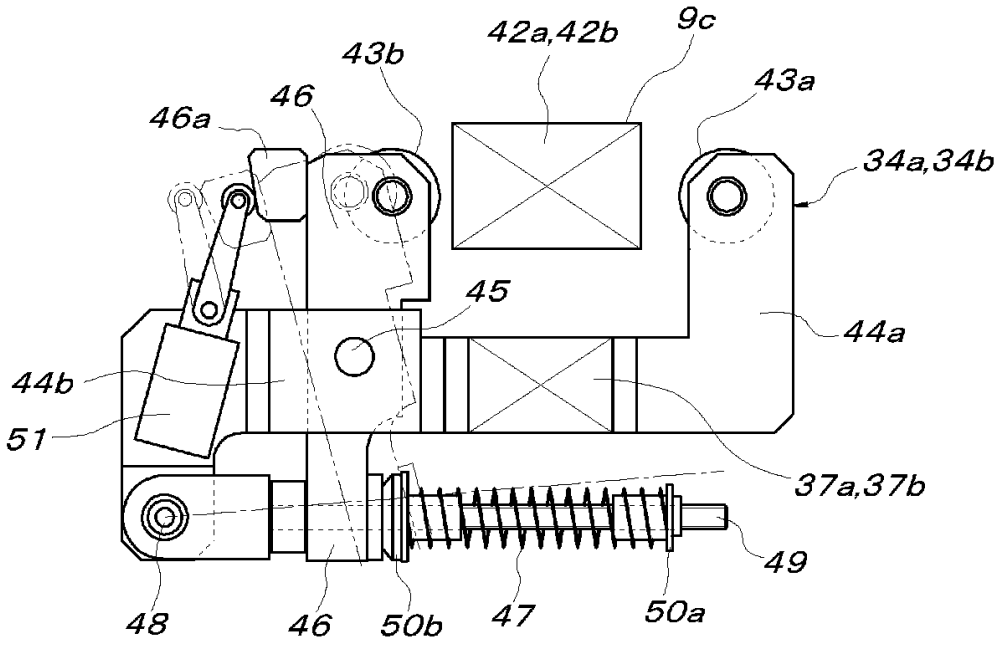
42a,42b
9c
43b
43a
46
46a
34a,34b
45
44a
44b
51
37a,37b
49
48
46
50b
47
50a

[図11]

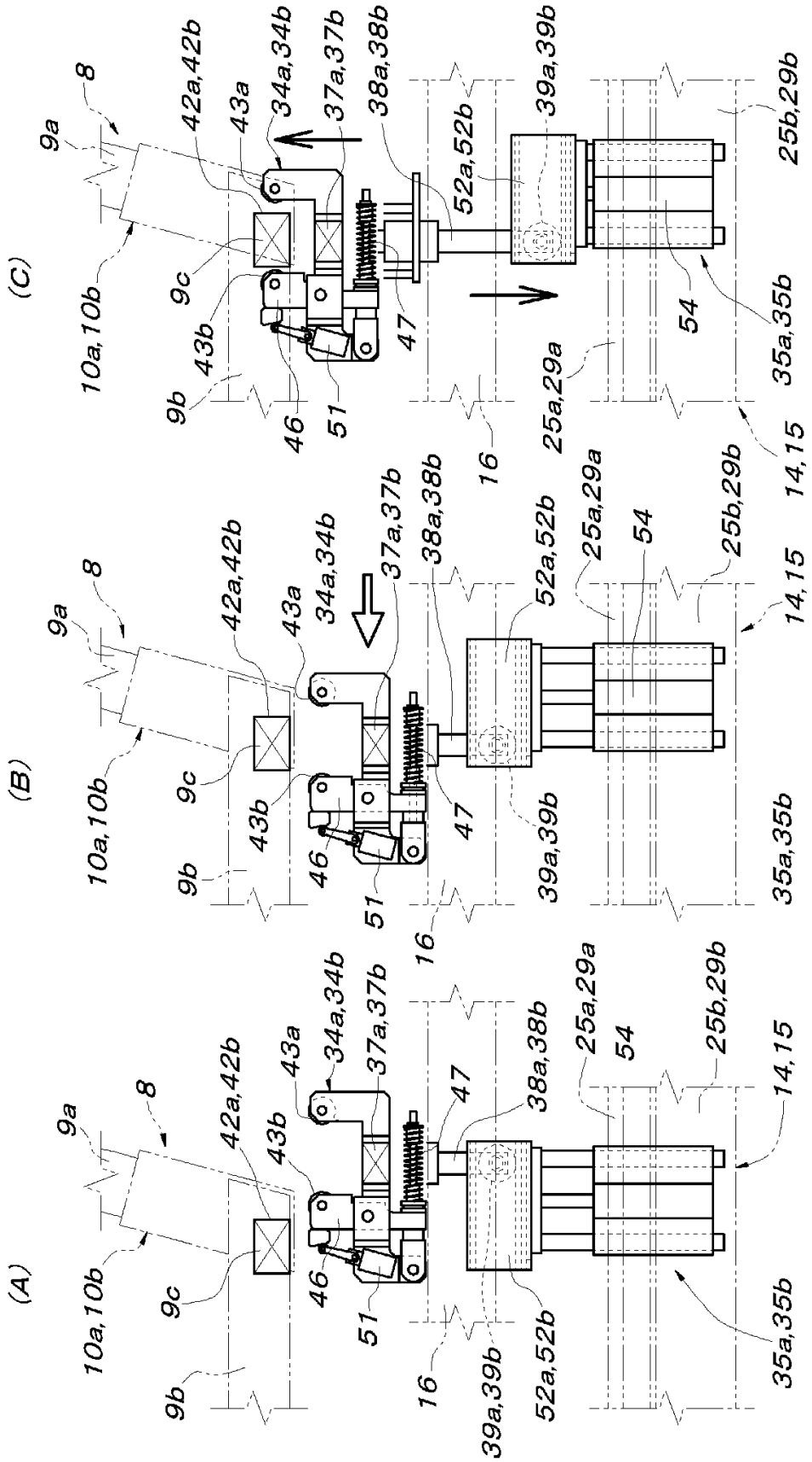
(A)
(B)
(C)
8
9a
9b
9c
10a,10b
14,15
16
25a,29a
25b,29b
34a,34b
35a,35b
37a,37b
38a,38b
39a,39b
42a,42b
43a
43b
46
47
51
52a,52b
54

[図12]

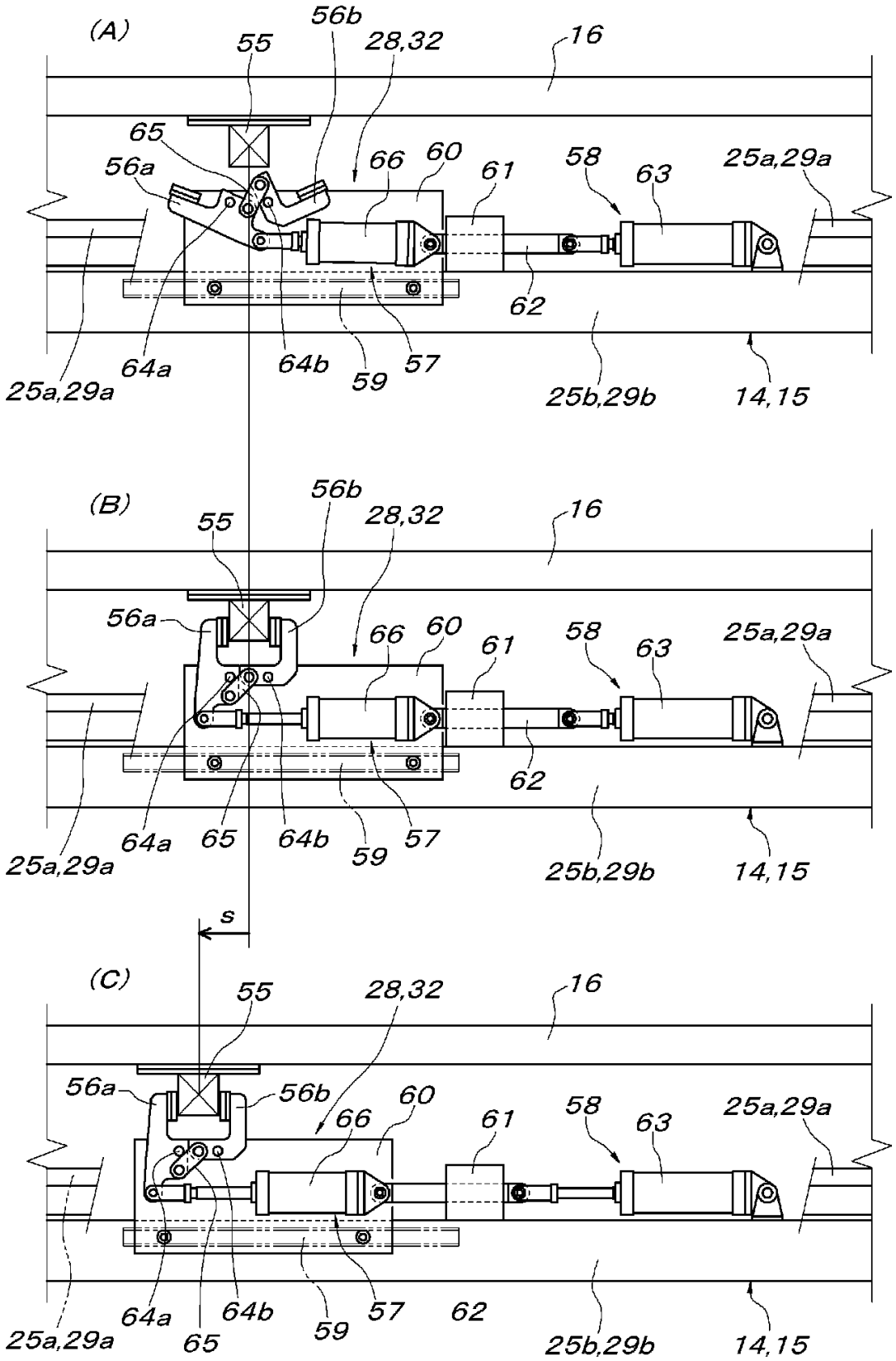
(A)
55
56b
28,32
16
65
56a
66
60
61
58
63
25a,29a
62
64a
64b
59
57
25a,29a
25b,29b
14,15
(B)
55
56b
28,32
16
56a
66
60
61
58
63
25a,29a
62
64a
65
64b
59
57
25a,29a
25b,29b
14,15
s
(C)
55
28,32
16
56a
56b
66
60
61
58
63
25a,29a
64a
64b
59
57
62
25a,29a
65
25b,29b
14,15

INTERNATIONAL SEARCH REPORT

International application No.
PCT/JP2006/314390

A. CLASSIFICATION OF SUBJECT MATTER
B61B10/02(2006.01)i, *B61B13/12*(2006.01)i, *B61J1/10*(2006.01)i, *B65G17/20*(2006.01)i

According to International Patent Classification (IPC) or to both national classification and IPC

B. FIELDS SEARCHED

Minimum documentation searched (classification system followed by classification symbols)
B61B10/00-04, B61B13/12, B61J1/10, B65G17/20, B65G35/00-08, B65G37/00

Documentation searched other than minimum documentation to the extent that such documents are included in the fields searched

Jitsuyo Shinan Koho	1922-1996	Jitsuyo Shinan Toroku Koho	1996-2006
Kokai Jitsuyo Shinan Koho	1971-2006	Toroku Jitsuyo Shinan Koho	1994-2006

Electronic data base consulted during the international search (name of data base and, where practicable, search terms used)

C. DOCUMENTS CONSIDERED TO BE RELEVANT

Category*	Citation of document, with indication, where appropriate, of the relevant passages	Relevant to claim No.
A	JP 6-115426 A (Daifuku Co., Ltd.), 26 April, 1994 (26.04.94), Par. Nos. [0026] to [0041]; Figs. 1 to 7 (Family: none)	1-11
A	JP 8-282836 A (Daifuku Co., Ltd.), 29 October, 1996 (29.10.96), Full text; all drawings (Family: none)	1-11
A	JP 2002-87346 A (Honda Motor Co., Ltd.), 27 March, 2002 (27.03.02), Full text; Figs. 1 to 3, 5 to 7 & US 6695126 B2 & GB 2373766 A & WO 2002/022433 A1 & CA 2390936 A1 & CN 1206125 C	1-11

☒ Further documents are listed in the continuation of Box C. ☐ See patent family annex.

* Special categories of cited documents:
"A" document defining the general state of the art which is not considered to be of particular relevance
"E" earlier application or patent but published on or after the international filing date
"L" document which may throw doubts on priority claim(s) or which is cited to establish the publication date of another citation or other special reason (as specified)
"O" document referring to an oral disclosure, use, exhibition or other means
"P" document published prior to the international filing date but later than the priority date claimed
"T" later document published after the international filing date or priority date and not in conflict with the application but cited to understand the principle or theory underlying the invention
"X" document of particular relevance; the claimed invention cannot be considered novel or cannot be considered to involve an inventive step when the document is taken alone
"Y" document of particular relevance; the claimed invention cannot be considered to involve an inventive step when the document is combined with one or more other such documents, such combination being obvious to a person skilled in the art
"&" document member of the same patent family

Date of the actual completion of the international search 17 October, 2006 (17.10.06)	Date of mailing of the international search report 31 October, 2006 (31.10.06)
Name and mailing address of the ISA/ Japanese Patent Office Facsimile No.	Authorized officer Telephone No.

INTERNATIONAL SEARCH REPORT

International application No.
PCT/JP2006/314390

C (Continuation). DOCUMENTS CONSIDERED TO BE RELEVANT

Category*	Citation of document, with indication, where appropriate, of the relevant passages	Relevant to claim No.
A	JP 2002-19946 A (Honda Motor Co., Ltd.), 23 January, 2002 (23.01.02), Full text; Figs. 1 to 4, 8, 9 (Family: none)	1-11

国際調査報告

国際出願番号　ＰＣＴ／ＪＰ２００６／３１４３９０

Ａ．　発明の属する分野の分類（国際特許分類（ＩＰＣ））

Int.Cl.　B61B10/02(2006.01)i, B61B13/12(2006.01)i, B61J1/10(2006.01)i, B65G17/20(2006.01)i

Ｂ．　調査を行った分野

調査を行った最小限資料（国際特許分類（ＩＰＣ））

Int.Cl.　B61B10/00-04, B61B13/12, B61J1/10, B65G17/20, B65G35/00-08, B65G37/00

最小限資料以外の資料で調査を行った分野に含まれるもの

日本国実用新案公報	１９２２－１９９６年
日本国公開実用新案公報	１９７１－２００６年
日本国実用新案登録公報	１９９６－２００６年
日本国登録実用新案公報	１９９４－２００６年

国際調査で使用した電子データベース（データベースの名称、調査に使用した用語）

Ｃ．　関連すると認められる文献

引用文献のカテゴリー＊	引用文献名　及び一部の箇所が関連するときは、その関連する箇所の表示	関連する請求の範囲の番号
A	JP 6-115426 A（株式会社ダイフク）１９９４．０４．２６，段落【００２６】－【００４１】，図１－７　（ファミリーなし）	１－１１
A	JP 8-282836 A（株式会社ダイフク）１９９６．１０．２９，全文，全図　（ファミリーなし）	１－１１
A	JP 2002-87346 A（本田技研工業株式会社）２００２．０３．２７，全文，図１－３，５－７ & US 6695126 B2 & GB 2373766 A & WO 2002/022433 A1 & CA 2390936 A1 & CN 1206125 C	１－１１

☑　Ｃ欄の続きにも文献が列挙されている。　☐　パテントファミリーに関する別紙を参照。

＊　引用文献のカテゴリー
「Ａ」特に関連のある文献ではなく、一般的技術水準を示すもの
「Ｅ」国際出願日前の出願または特許であるが、国際出願日以後に公表されたもの
「Ｌ」優先権主張に疑義を提起する文献又は他の文献の発行日若しくは他の特別な理由を確立するために引用する文献（理由を付す）
「Ｏ」口頭による開示、使用、展示等に言及する文献
「Ｐ」国際出願日前で、かつ優先権の主張の基礎となる出願の日の後に公表された文献
「Ｔ」国際出願日又は優先日後に公表された文献であって出願と矛盾するものではなく、発明の原理又は理論の理解のために引用するもの
「Ｘ」特に関連のある文献であって、当該文献のみで発明の新規性又は進歩性がないと考えられるもの
「Ｙ」特に関連のある文献であって、当該文献と他の１以上の文献との、当業者にとって自明である組合せによって進歩性がないと考えられるもの
「&」同一パテントファミリー文献

国際調査を完了した日	国際調査報告の発送日
１７．１０．２００６	３１．１０．２００６

国際調査機関の名称及びあて先	特許庁審査官（権限のある職員）	３Ｄ	３４２０
日本国特許庁（ＩＳＡ／ＪＰ） 郵便番号１００－８９１５ 東京都千代田区霞が関三丁目４番３号	落合　弘之 電話番号　０３－３５８１－１１０１　内線　３３４１		

Ｃ（続き）．　関連すると認められる文献

引用文献のカテゴリー＊	引用文献名　及び一部の箇所が関連するときは、その関連する箇所の表示	関連する請求の範囲の番号
A	JP 2002-19946 A（本田技研工業株式会社）２００２．０１．２３，全文，図１－４，８，９　（ファミリーなし）	１－１１

(12) 特許協力条約に基づいて公開された国際出願

(19) 世界知的所有権機関
国際事務局

(43) 国際公開日
2007年2月1日 (01.02.2007)

PCT

(10) 国際公開番号
WO 2007/013348 A1

(51) 国際特許分類:
B61B 10/02 (2006.01) *B61J 1/10* (2006.01)
B61B 13/12 (2006.01) *B65G 17/20* (2006.01)

(21) 国際出願番号: PCT/JP2006/314390

(22) 国際出願日: 2006年7月20日 (20.07.2006)

(25) 国際出願の言語: 日本語

(26) 国際公開の言語: 日本語

(30) 優先権データ:
特願2005-213748 2005年7月25日 (25.07.2005) JP

(71) 出願人 (米国を除く全ての指定国について): 株式会社ダイフク (DAIFUKU CO., LTD.) [JP/JP]; 〒5500012 大阪府大阪市西淀川区御幣島３丁目２番１１号 Osaka (JP).

(72) 発明者; および
(75) 発明者/出願人 (米国についてのみ): 中村 次郎 (NAKAMURA, Jiro) [JP/JP]; 〒5500012 大阪府大阪市西淀川区御幣島３丁目２番１１号 株式会社エイ・ピー・エス内 Osaka (JP).

(74) 代理人: 藤川 忠司 (FUJIKAWA, Tadashi); 〒6600807 兵庫県尼崎市長洲西通１丁目１番２２号 Hyogo (JP).

(81) 指定国 (表示のない限り、全ての種類の国内保護が可能): AE, AG, AL, AM, AT, AU, AZ, BA, BB, BG, BR, BW, BY, BZ, CA, CH, CN, CO, CR, CU, CZ, DE, DK, DM, DZ, EC, EE, EG, ES, FI, GB, GD, GE, GH, GM, HN, HR, HU, ID, IL, IN, IS, KE, KG, KM, KN, KP, KR, KZ, LA, LC, LK, LR, LS, LT, LU, LV, LY, MA, MD, MG, MK, MN, MW, MX, MZ, NA, NG, NI, NO, NZ, OM, PG, PH, PL, PT, RO, RS, RU, SC, SD, SE, SG, SK, SL, SM, SY, TJ, TM, TN, TR, TT, TZ, UA, UG, US, UZ, VC, VN, ZA, ZM, ZW.

(84) 指定国 (表示のない限り、全ての種類の広域保護が可能): ARIPO (BW, GH, GM, KE, LS, MW, MZ, NA, SD, SL, SZ, TZ, UG, ZM, ZW), ユーラシア (AM, AZ, BY, KG, KZ, MD, RU, TJ, TM), ヨーロッパ (AT, BE, BG, CH, CY, CZ, DE, DK, EE, ES, FI, FR, GB, GR, HU, IE, IS, IT, LT, LU, LV, MC, NL, PL, PT, RO, SE, SI, SK, TR), OAPI (BF, BJ, CF, CG, CI, CM, GA, GN, GQ, GW, ML, MR, NE, SN, TD, TG).

[続葉有]

(54) Title: DELIVERY FACILITY FOR TRAVELING BODY FOR TRANSPORTATION

(54) 発明の名称: 搬送用走行体の配送設備

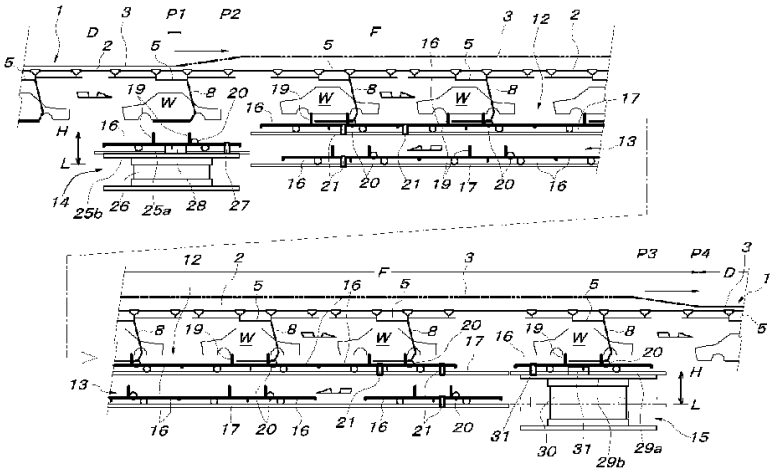

(57) Abstract: A transportation facility in which an object transported while being suspended from a hanger such as a trolley conveyor is transferred on to a carriage of a carriage-type transportation device only for a certain section of a route. At the start point of transportation of the carriage-type transportation device, there is provided an object receiving means (14) at the under side of a traveling route of a traveling body (5) of the conveyor (1). An object support device (19) of the carriage (16) is lifted relative to the hanger (8) of the traveling body, and the object receiving means (14) is caused to receive the object (W) from the hanger. At the end of the transportation is provided an object return means (15) for lowering the object support device relative to the hanger of the traveling body to transfer the object to the hanger. In the transportation route (12) of the carriage-type transportation device, the traveling body is switched to a state in which drive is released and a hanger engagement means (20) of the carriage is engaged with the hanger so that the traveling body can be pulled and moved by the carriage.

[続葉有]

WO 2007/013348 A1

添付公開書類:
— 国際調査報告書

２文字コード及び他の略語については、定期発行される各*PCT*ガゼットの巻頭に掲載されている「コードと略語のガイダンスノート」を参照。

(57) 要約:

トロリーコンベヤなどのハンガーによって吊り下げ搬送される被搬送物を、当該被搬送物に対する作業などのために一定区間だけ台車式搬送装置の台車上に移し換えて搬送できる搬送設備を提供するものであって、トロリーコンベヤ（１）の走行体（５）の走行経路の下側に配設された台車式搬送装置の搬送開始端に、台車（１６）の被搬送物支持具（１９）を走行体のハンガー（８）に対して相対的に上げて当該ハンガーから被搬送物（W）を受け取らせる被搬送物受取手段（１４）が設けられ、搬送終了端には、前記被搬送物支持具を走行体のハンガーに対して相対的に下げて当該ハンガーに被搬送物を移載する被搬送物戻し手段（１５）を備えた搬送設備であって、台車式搬送装置の搬送経路（１２）では、走行体が駆動解除状態に切り換えられると共に台車のハンガー係止手段（２０）がハンガーを係止して当該走行体を台車が牽引移動させるようにした。

明 細 書

搬送用走行体の配送設備

技術分野

[0001] 本発明は、トロリーコンベヤや自走電車に設けられたハンガーによって吊り下げ搬送される被搬送物を一定区間だけ台車式搬送装置の台車上に移し換えて搬送する搬送設備に関するものである。

背景技術

[0002] 例えば自動車の組立ラインでは、トロリーコンベヤの走行体や自走電車に設けられたハンガーで吊り下げ搬送される車体にエンジンやドアーなどを組み付ける作業が行われるが、この場合、ハンガーで支持された車体に対する部品組み付け作業を台車式搬送装置の台車上で行うことが知られている。このような場合に使用できる搬送設備としては、例えば特許文献1に記載されるように、車体を支持するハンガーを備えた走行体(プッシャーで駆動されるトロリーコンベヤの走行体)を床側の搬送装置と同期させて走行させ、床側の搬送装置上から前記ハンガーで吊り下げ搬送される車体に対する部品組み付け作業などを行うように構成された搬送設備や、特許文献2に記載された搬送設備のように、ハンガーで吊り下げ搬送される被搬送物を、当該ハンガーを備えたトロリーコンベヤの走行体や自走電車と同期走行する台車式搬送装置の台車上に移し替え、当該台車上での作業終了後に再び台車上の車体をハンガーに戻すように構成された搬送設備が知られている。

特許文献1:特公平4－5581号公報

特許文献2:特開平7－157073号公報

発明の開示

発明が解決しようとする課題

[0003] しかしながら、上記のような従来周知の搬送設備では、作業完了までの間、車体などの被搬送物を吊り下げ搬送する被搬送物吊下式搬送装置(トロリーコンベヤの走行体や自走電車)と作業者が搭乗して作業を行う台車式搬送装置(台車)とを同期運転する必要があり、両搬送装置の制御に高度の技術を必要とするばかりでなく、特許

文献1に記載されたような搬送設備を使用するときは、被搬送物を吊り下げるハンガーが邪魔になるような場所に対する部品組み付け作業が行えない。

課題を解決するための手段

[0004] 本発明は上記のような従来の問題点を解消し得る搬送設備を提供することを目的とするものであって、請求項1に記載の本発明に係る搬送設備は、後述する実施形態の参照符号を括弧付きで付して示すと、被搬送物吊下式搬送装置（P＆F形式のトロリーコンベヤ(1)）と、台車式搬送装置(11)と、被搬送物受取手段(14)と、被搬送物戻し手段(15)とを備えた搬送設備であって、前記被搬送物吊下式搬送装置（P＆F形式のトロリーコンベヤ(1)）は、被搬送物支持用ハンガー(8)が設けられた走行体(5)を備えると共に、この走行体(5)の走行経路中には、当該走行体(5)を強制走行させる駆動区間(D)と、当該走行体(5)を移動自由な状態とする駆動解除区間(F)とが設けられ、前記台車式搬送装置(11)は、前記走行体(5)の走行経路の駆動解除区間(F)の下側で当該走行経路に沿って走行可能な台車(16)を備えると共に、当該台車(16)上には被搬送物支持具(19)が設けられ、前記被搬送物受取手段(14)は、前記台車式搬送装置(11)の搬送開始端において前記被搬送物支持具(19)を前記走行体(5)のハンガー(8)に対して相対的に上げて当該ハンガー(8)から被搬送物(W)を前記被搬送物支持具(19)に移載する手段であり、前記被搬送物戻し手段(15)は、前記台車式搬送装置(11)の搬送終了端において前記被搬送物支持具(19)を前記走行体(5)のハンガー(8)に対して相対的に下げて当該被搬送物支持具(19)からハンガー(8)に被搬送物(W)を移載する手段である搬送設備において、

前記被搬送物吊下式搬送装置（P＆F形式のトロリーコンベヤ(1)）の走行体(5)の被搬送物支持用ハンガー(8)には、被係止部(42a)が設けられ、前記台車式搬送装置(11)の台車(16)には、前記ハンガー(8)の被係止部(42a)に対し係脱自在なハンガー係止手段(20)が設けられ、前記台車式搬送装置(11)の搬送経路(12)では、前記ハンガー係止手段(20)が前記ハンガー(8)の被係止部(42a)と係合し、駆動解除状態に切り換えられている前記被搬送物吊下式搬送装置（P＆F形式のトロリーコンベヤ(1)）の走行体(5)を前記台車(16)が前記ハンガー(8)を介して牽引移動させる構成となっている。

[0005] 上記構成の本発明を実施するについて、前記被搬送物吊下式搬送装置は、走行用駆動手段を備えているが特定区間では自由に前後に遊動させることができる駆動解除状態とすることができる自走電車に被搬送物支持用ハンガー(8)を吊り下げたものでも良いが、請求項2に記載のように、前記被搬送物吊下式搬送装置は、その走行体(5)の走行経路に沿って移動するプッシャーで当該走行体(5)を推進させるトロリーコンベヤ(1)により構成し、前記駆動解除区間(F)では、前記トロリーコンベヤ(1)の走行体(5)がプッシャーから切り離されて駆動解除状態に切り換えられるように構成することができる。

[0006] 前記被搬送物受取手段(14)及び被搬送物戻し手段(15)は、台車(16)に対して被搬送物支持具(19)を昇降させる構成によって実現することもできるが、請求項3に記載のように、台車(15)自体を昇降させる昇降ガイドレール(25a,29a)によって構成することができる。

[0007] ハンガー(8)から台車(16)上(被搬送物支持具(19)上)に移載された被搬送物(W)に対する部品組み込み作業などの作業部位(Wa)がハンガー(8)と重なるような場合、即ち、被搬送物(W)から切り離されたハンガー(8)が作業の邪魔になるような場合は、当該ハンガー(8)と台車(16)上の被搬送物(W)とを前後方向に所定距離だけ相対移動させれば良いが、この場合、請求項4に記載のように、前記ハンガー係止手段(20)を、前記台車式搬送装置(11)の搬送開始端においてハンガー(8)から被搬送物(W)を受け取った被搬送物支持具(19)と当該ハンガー(8)とが相対的に一定距離前後方向に移動したときにハンガー(8)側の被係止部(42a)に対応する位置に設け、前記台車式搬送装置(11)の搬送終了端においては、被搬送物(W)を支持する被搬送物支持具(19)とハンガー(8)とを元の前後方向相対位置に戻した後、前記被搬送物戻し手段(15)を動作させるように構成すれば良い。この場合の前記台車式搬送装置(11)の搬送開始端及び搬送終了端における被搬送物支持具(19)とハンガー(8)との相対的前後方向移動は、例えば、請求項5に記載のように台車(16)そのものを前後方向に移動させることによって実現できるが、その他、台車(16)に対して当該台車(16)上の被搬送物支持具(19)を前後方向に移動させる方法や、定位置にある台車(16)に対してハンガー(8)(当該ハンガー(8)を備えたトロリーコンベヤ(1)の走行体(5)や当該ハンガー(8)を

備えた自走電車など)を前後方向に移動させる方法によっても実現できる。

[0008] 前記台車式搬送装置(11)は、先に説明したように自走可能な電車を利用したものであっても良いが、自走できない台車(16)を台車走行経路側に配設された台車駆動手段(摩擦駆動手段(21))により推進させる構成のものである場合は、請求項6に記載のように、前記被搬送物受取手段(14)には、台車(16)を搬送経路(12)側へ送り出す台車送り出し手段(台車引き込み送り出し手段(27))と、支持する台車(16)を、前記ハンガー係止手段(20)がハンガー(8)の被係止部(42a)に対応する位置まで前後方向に移動させる台車用フィーダー(28)とを設け、前記被搬送物戻し手段(15)には、搬送経路(12)から送り込まれる台車(16)を所定位置まで引き込む台車引き込み手段(台車引き込み送り出し手段(31))と、支持する被搬送物(W)とハンガー(8)とが元の前後方向相対位置に戻るように台車(16)を前後方向に復帰移動させる台車用フィーダー(32)とを設けることができる。この場合、請求項7に記載のように、前記台車用フィーダー(28,32)は、台車(16)に設けられた被把持部(55)を前後から挟持する前後一対の開閉挟持片(56a,56b)と、この開閉挟持片(56a,56b)の開閉用駆動手段(57)と、前記開閉挟持片(56a,56b)を前後方向に往復移動させる移動用駆動手段(58)とから構成することができる。

[0009] 前記被搬送物吊下式搬送装置(トロリーコンベヤ(1))のハンガーは、当該ハンガー(8)が支持する被搬送物(W)を台車(16)側の被搬送物支持具(19)で下から受け取らせることができる構成のものであれば、如何なる構成のものでも良いが、自動車組立ラインなどで使用される車体支持用ハンガーとして一般的なハンガー、即ち、左右横方向に開閉する左右一対のハンガーアーム(10a,10b)を備えたものであるときは、請求項8に記載のように、前記ハンガー係止手段(20)は、左右各ハンガーアーム(10a,10b)に設けられた被係止部(42a,42b)に対し係脱自在な左右一対の係止具(34a,34b)と、この左右一対の係止具(34a,34b)を連動させて係脱動作させる1つの係止具位置切り換え手段(35a)又は(35b)とから構成することができる。この場合、請求項9に記載のように、前記左右一対の係止具(34a,34b)は、スプリング(40a,40b)により被係止部(42a,42b)に係合する上位置に付勢保持させると共に、各係止具(34a,34b)それぞれに連動昇降するカム従動ローラー(39a,39b)を台車(16)側に設け、前記係止具位置切り換え

手段(35a)又は(35b)は前記被搬送物受取手段(14)及び被搬送物戻し手段(15)の位置に台車(16)があるときに当該台車(16)側の前記カム従動ローラー(39a,39b)と係合するように前記被搬送物受取手段(14)及び被搬送物戻し手段(15)にそれぞれ併設されたカムレール(52a,52b)と、これらカムレール(52a,52b)を昇降させるカムレール駆動手段(シリンダーユニット(54))とから構成することができる。更にこの場合、請求項10に記載のように、前記左右一対の係止具(34a,34b)は、左右横向きに配置され且つ中間に支点を有する左右一対のシーソー運動体(37a,37b)の外端にそれぞれ設け、両シーソー運動体(37a,37b)の内端に昇降体(38a,38b)を連動連結すると共に当該昇降体(38a,38b)の下端に前記カム従動ローラー(39a,39b)を軸支することができる。

[0010] 又、前記ハンガー係止手段(20)を、前記ハンガー(8)に設けられた被係止部(42a)に対し上下方向に嵌合離脱自在な係止具(34a)と、この係止具(34a)を昇降移動させる係止具位置切り換え手段(35a)又は(35b)とから構成する場合、請求項11に記載のように、前記係止具(34a)は、前記被係止部(42a)を挟む前後一対の係止部(43a,43b)を備えたものとし、この前後一対の係止部(43a,43b)の内、被係止部(42a)を後押しする後側係止部(43b)は、一定範囲内前後移動自在に構成すると共にスプリング(47)により前側定位置に付勢保持させ、当該後側係止部(43b)が前記スプリング(47)に抗して後方に移動したことを検知するためのセンサー(51)を併設することができる。

発明の効果

[0011] 上記請求項1に記載の本発明に係る搬送設備によれば、被搬送物吊下式搬送装置の被搬送物支持用ハンガーによって吊り下げ搬送している被搬送物に対し部品組み付け作業などを行う区間の床側に台車式搬送装置を設置し、この台車式搬送装置の搬送開始端に対応する定位置で被搬送物吊下式搬送装置の走行体(ハンガー)を停止させた状態で当該搬送開始端に配設された被搬送物受取手段を動作させることにより、前記ハンガーに支持されていた被搬送物を前記台車式搬送装置の台車上に乗り移らせ、台車式搬送装置の搬送終了端までは前記台車の被搬送物支持具で支持させた状態で被搬送物を搬送させることができるので、当該被搬送物に対する部品組み付け作業などを前記台車上で容易に行うことができるのであるが、このとき、被搬送物をそれまで支持していた空のハンガーは前記台車が備えるハンガ

一係止手段で当該台車と一体化させ、台車の走行により空のハンガーを介して被搬送物吊下式搬送装置の走行体(ハンガー)を牽引走行させることができる。従って、被搬送物を台車側に移載している間、被搬送物吊下式搬送装置の走行体(ハンガー)を台車と同期させて前進走行させるための手段や制御が全く不要になり、搬送設備全体の構成を簡略化して大幅なコストダウンを図ることができる。

[0012] 勿論、台車式搬送装置の搬送終了端まで台車によって搬送した被搬送物は、当該搬送終了端で被搬送物戻し手段の動作により台車に牽引されてきた被搬送物吊下式搬送装置の走行体(ハンガー)側に戻し、以降はこの被搬送物吊下式搬送装置の走行体(ハンガー)によって吊り下げ搬送させることができるのであるが、このときも被搬送物を台車側から受け取る被搬送物吊下式搬送装置の走行体(ハンガー)は当該台車とハンガー係止手段で一体化されていたのであるから、両者間の被搬送物の移載が安全確実に行えるように、台車とは切り離されて走行していた被搬送物受取側の走行体(ハンガー)を台車側に対して位置合わせする必要がなく、台車式搬送装置の搬送終了端での当該台車式搬送装置から被搬送物吊下式搬送装置への安全確実な被搬送物の戻し作業も容易に行わせることができる。

[0013] 尚、請求項2に記載の構成によれば、走行体走行体の走行経路に沿って移動するプッシャーで当該走行体を推進させるトロリーコンベヤを被搬送物吊下式搬送装置に活用して、本発明の搬送設備を容易に実施することができる。又、請求項3に記載の構成によれば、被搬送物受取手段及び被搬送物戻し手段を、台車に対して被搬送物支持具を昇降させる構成によって実現する場合よりも、数多く必要な台車の構成がシンプルになり、本発明の搬送設備を容易且つ安価に実施することができるばかりでなく、台車式搬送装置の台車による搬送経路の下側を空台車の戻し経路に構成した場合に必要な、台車式搬送装置の搬送開始端及び搬送終了端に必要な台車昇降手段(昇降ガイドレール)で前記被搬送物受取手段及び被搬送物戻し手段を兼ねさせることができる。

[0014] 又、台車式搬送装置の台車上に被搬送物を移載した後の空になったハンガーをそのままの位置で台車にハンガー係止手段で一体化したのでは、当該被搬送物に対する部品組み込み作業などの作業対象箇所が空になったハンガーと重なって作業

の邪魔になるような場合には、請求項4に記載の構成を採用することにより、当該被搬送物の作業対象箇所を空になったハンガーから前後方向に離して、空になったハンガーに邪魔されることなく当該被搬送物の作業対象箇所に対する作業を容易に行うことができる。この場合、請求項5に記載の構成によれば、請求項4に記載の構成を簡単容易に実施することができる。

[0015] 前記台車式搬送装置が、自走できない台車を台車走行経路側に配設された台車駆動手段により推進させる構成のものである場合は、請求項6や請求項7に記載の構成を採用することにより、請求項5に記載の構成を含めて本発明を簡単容易に実施することができる。

[0016] 前記被搬送物吊下式搬送装置のハンガーが、自動車組立ラインなどで使用される車体支持用ハンガーとして一般的なハンガー、即ち、左右横方向に開閉する左右一対のハンガーアームを備えたものであるときは、請求項8に記載の構成を採用することにより、左右一対のハンガーアームの何れか片側のハンガーアームのみを台車側にハンガー係止手段で係止一体化させる場合よりも、ハンガーを介して被搬送物吊下式搬送装置の走行体を台車で牽引させる作用を無理なく確実に行わせることができる。しかも、左右一対のハンガーアームを各別に係止する左右一対の係止具を1つの係止具位置切り換え手段により係止作用位置と係止解除位置とに切り換えることができるので、各係止具ごとに係止具位置切り換え手段を設ける場合よりも制御が簡単になる。

[0017] 上記の請求項8に記載の構成を採用する場合、請求項9に記載のように実施することにより、台車式搬送装置の台車による搬送経路の全域にわたって前記左右一対の係止具を位置切り換え手段で係止作用位置に保持する必要がなく、前記左右一対の係止具を係止作用位置に切り換えたり係止解除位置に切り換えたりするための手段として、前記被搬送物受取手段及び被搬送物戻し手段の位置にのみカムレールと当該カムレールを昇降させるカムレール駆動手段とを配設しておくだけで良いので、台車側に前記左右一対の係止具を位置切り換えのための駆動源を設けなければならない場合よりも、容易且つ安価に本発明を実施することができる。更にこの場合、請求項10に記載の構成によれば、前記左右一対の係止具はハンガーの左右一対

のハンガーアームに対応させて台車の左右両側に配設しながら、両係止具に連動する左右一対の昇降するカム従動ローラーは台車の左右巾方向の中央側に寄せて配設することができ、前記被搬送物受取手段及び被搬送物戻し手段の位置に各カム従動ローラーに対応して配設される左右一対のカムレールを一体化し、1つのカムレール駆動手段で一体に昇降駆動することが容易になる。

[0018] 又、請求項11に記載の構成によれば、ハンガー係止手段で台車に係止一体化したハンガーを介して被搬送物吊下式搬送装置の走行体を台車で牽引している状況において、被搬送物吊下式搬送装置の走行体が何らかの原因で円滑な走行が行えない事態に陥り、台車に対してハンガー側が大きな抵抗になった場合、センサーで係る事態を速やかに検知させることができるので、当該センサーの検知信号に基づいて台車の推進駆動に非常停止をかけるなど、必要な対策を自動的にとらせることが容易に行える。

図面の簡単な説明

[0019] [図1]本発明の搬送設備の全体の構成を説明する概略側面図である。

[図2]被搬送物受取手段で吊下搬送されてきた被搬送物を受け取る直前の状態を説明する側面図である。

[図3]図2の状態から1段階進んだ状態を説明する側面図である。

[図4]図3の状態から1段階進んだ状態を説明する側面図である。

[図5]図4の状態から1段階進んだ状態を説明する側面図である。

[図6]被搬送物受取手段から台車式搬送装置の搬送経路へ台車が送り出されるときの状態を説明する側面図である。

[図7]被搬送物戻し手段での作用を説明する側面図である。

[図8]被搬送物受取手段及び被搬送物戻し手段の構成を説明する正面図である。

[図9]ハンガー係止手段の構成を説明する図で、A図は係止作用状態にあるハンガー係止手段を示す正面図、B図は係止解除状態にあるハンガー係止手段を示す正面図である。

[図10]ハンガー係止手段の係止具の具体的構成を説明する側面図である。

[図11]A図～C図はハンガー係止手段の各段階での状態を説明する側面図である。

[図12]A図～C図は台車用フィーダーの各段階での状態を説明する側面図である。

符号の説明

[0020] 1　パワー＆フリー形式のトロリーコンベヤ(被搬送物吊下式搬送装置)

2　フリーライン

3　パワーライン

4, 4a　トロリー

5　走行体

6　被動用ドッグ

8　被搬送物支持用ハンガー

9c　ハンガーアームの被搬送物支持部

10a, 10b　左右一対のハンガーアーム

11　台車式搬送装置

12　搬送経路

13　台車戻り経路

14　被搬送物受取手段

15　被搬送物戻し手段

16　台車

19　被搬送物支持具

20　ハンガー係止手段

21　摩擦駆動手段

22a, 22b　左右一対の帯状垂直摩擦面

23　モーター駆動の摩擦駆動輪

24　バックアップローラー

25a、29a　昇降ガイドレール

25b, 29b　昇降台

26, 30　昇降用駆動手段

27, 31　台車引き込み送り出し手段

28, 32　台車用フィーダー

34a, 34b　左右一対の係止具

35a, 35b　係止具位置切り換え手段

37a, 37b　シーソー運動体

38a, 38b　左右一対の棒状昇降体

39a, 39b　カム従動ローラー

40a, 40b　引張スプリング

42a, 42b　ハンガーの被係止部

43a, 43b　前後一対の係止部(ローラー)

44a　L形アーム部

44b　軸受け部材

46　レバーアーム

47　スプリング

51　過負荷検知用センサー

52a, 52b　左右一対のカムレール

54　カムレール駆動手段(シリンダーユニット)

55　台車側の被把持部

56a, 56b　前後一対の開閉挟持片

57　開閉用駆動手段

58　移動用駆動手段

60　可動部材

61　スライドガイド

62　中継ロッド

63, 66　シリンダーユニット

65　リンク

D　トロリーコンベヤの駆動区間

F　トロリーコンベヤの駆動解除区間

W　被搬送物

発明を実施するための最良の形態

[0021] 以下に本発明の具体的実施例を添付図に基づいて説明すると、図1及び図2において、1は被搬送物吊下式搬送装置として本実施形態で使用した従来周知のパワー&フリー形式のトロリーコンベヤであり、下側ガイドレールで構成されるフリーライン2と上側ガイドレールで構成されたパワーライン3とを備え、フリーライン2には、複数のトロリー4，4aを介して走行体5が走行可能に吊り下げられ、パワーライン3の上側ガイドレールには、前記走行体5の先頭のトロリー4aに設けられた被動用ドッグ6に係脱自在なプッシャーを適当間隔おきに備えた駆動用チエンがトロリーを介して吊り下げられ、フリーライン2とパワーライン3との上下間隔が、パワーライン3側のプッシャーがフリーライン2側の走行体5の被動用ドッグ6に係合し得る間隔に設定されている駆動区間Dでは、前記走行体5がプッシャーによりフリーライン2に沿って推進せしめられ、フリーライン2とパワーライン3との上下間隔が上記間隔よりも広くなるか又はフリーライン2上からパワーライン3が横側方に離れる駆動解除区間Fでは、プッシャーによる前記走行体5の駆動が解除され、当該走行体5がフリーライン2上で停止し、フリーライン2に併設された位置決め手段がなければフリーライン2上で自由に遊動できる状態になる。

[0022] 尚、図1に仮想線で示した駆動解除区間Fにおけるパワーライン3は、フリーライン2から上方に離間させてあり、当該駆動解除区間Fの下手側の駆動区間Dで再び元の高さに戻されるように構成しているが、当該駆動解除区間Fにおけるパワーライン3を横側方に迂回させることもできるし、当該駆動解除区間Fの下手側の駆動区間Dで使用されるパワーライン3として、駆動解除区間Fの上手側の駆動区間Dで使用されるパワーライン3とは別の駆動手段で駆動される別系統のパワーライン3を使用することもできる。

[0023] トロリーコンベヤ1の走行体5には被搬送物支持用ハンガー8が吊り下げられている。このハンガー8は、図2及び図8に示すように、左右一対のハンガーアーム10a，10bから成るもので、各ハンガーアーム10a，10bは、縦杆部9aと当該縦杆部9aの下端からほぼ水平後方に延出する水平杆部9b、及び水平杆部9bから内向きに連設された被搬送物支持部9cから構成されている。自動車の車体などの被搬送物Wは、図8に示すように、正面から見て両ハンガーアーム10a，10bの縦杆部9aの内側に納ま

る状態で、その底部の左右両側辺が両ハンガーアーム10a，10bの被搬送物支持部9cで支持される。尚、両ハンガーアーム10a，10bは被搬送物Wの積み下ろしのために左右横方向に開閉運動可能に構成されている。

[0024] 図1において、11は台車式搬送装置であって、トロリーコンベヤ1の駆動解除区間Fにおけるフリーライン2の直下で当該フリーライン2と平行に配設された搬送経路12、当該搬送経路12の下側に当該搬送経路12と平行に配設された台車戻り経路13、搬送経路12の搬送開始端に配設された被搬送物受取手段14、及び搬送経路12の搬送終了端に配設された被搬送物戻し手段15から構成され、複数台の台車16が被搬送物受取手段14から搬送経路12、被搬送物戻し手段15、台車戻り経路13をこの順に経由して被搬送物受取手段14に戻るように循環走行するものである。而して各台車16は、1つの被搬送物Wより適当長さだけ全長が長いもので、搬送経路12や台車戻り経路13側のガイドレール17に車輪18を介して直進走行可能に支持され、被搬送物支持具19とハンガー係止手段20とを備えたものであるが、走行用駆動手段は設けられておらず、走行経路脇に配設された摩擦駆動手段21（図1参照）から受ける推進力によって走行する。摩擦駆動手段21は、図8に示すように、被搬送物受取手段14や被搬送物戻し手段15に併設される台車引き込み送り出し手段27，31と同様に、台車16の走行方向と平行で台車16の全長にわたって連続するように台車16に設けられた左右一対の帯状垂直摩擦面22a，22b（図示例では、台車16の左右両側面をそのまま利用している）の内、一方の摩擦面22aに圧接するモーター駆動の摩擦駆動輪23と、他方の摩擦面22bに当接するバックアップローラー24との組み合わせから構成されている。

[0025] 上記の摩擦駆動手段21は、図1に示すように台車式搬送装置11の搬送経路12や台車戻り経路13の適当位置に必要に応じて制動手段などと共に配設され、搬送経路12では、被搬送物受取手段14からこの搬送経路12内に送り出される台車16を引き継いで、直後の台車16が直前の台車16を後押しする前後突き合いの状態で搬送経路12の終端まで定速で推進させ、被搬送物戻し手段15が台車受入可能になったときに搬送経路12の終端から当該被搬送物戻し手段15へ台車16を1台ずつ送り出すように構成され、台車戻り経路13では、被搬送物戻し手段15からこの台車戻り経

路13内に送り出される台車16を引き継いで被搬送物受取手段14側へ高速走行させ、被搬送物受取手段14が台車受入可能になったときに台車戻り経路13の終端から当該被搬送物受取手段14へ台車16を1台ずつ送り出すように構成されている。

[0026] 被搬送物受取手段14は、図2に示すように、1台の台車16を支持し得る長さの昇降ガイドレール25aが敷設された昇降台25bと、この昇降台25bを、昇降ガイドレール25aが搬送経路12のガイドレール17の始端に接続する上昇限レベルHと昇降ガイドレール25aが台車戻り経路13のガイドレール17の終端に接続する下降限レベルLとの間で昇降させる昇降用駆動手段26とから構成され、昇降台25bには、台車引き込み送り出し手段27と台車用フィーダー28とが搭載されている。被搬送物戻し手段15は、図7に示すように、1台の台車16を支持し得る長さの昇降ガイドレール29aが敷設された昇降台29bと、この昇降台29bを、昇降ガイドレール29aが搬送経路12のガイドレール17の終端に接続する上昇限レベルHと昇降ガイドレール29aが台車戻り経路13のガイドレール17の始端に接続する下降限レベルLとの間で昇降させる昇降用駆動手段30とから構成され、昇降台29bには、台車引き込み送り出し手段31と台車用フィーダー32とが搭載されている。昇降用駆動手段26, 30には、クロスリンク機構方式やラックピニオンギヤ方式、シリンダーによる直接昇降駆動方式など、従来周知の各種方式のものが利用される。

[0027] 各台車16に設けられたハンガー係止手段20は、図8及び図9に示すように、左右一対の係止具34a, 34bと、両係止具34a, 34bを係止作用上位置と係止解除下位置とに切り換える係止具位置切り換え手段35a, 35bとから構成されている。而して、左右一対の係止具34a, 34bは、左右対称形に配置されると共に中央部が前後方向水平支軸36a, 36bで台車16側に軸支された左右一対のシーソー運動体37a, 37bの外端に設けられ、各シーソー運動体37a, 37bの内端には、台車16側に昇降のみ可能に支持された左右一対の棒状昇降体38a, 38bの上端部がそれぞれ長孔とピンとを介して連結され、これら両棒状昇降体38a, 38bの下端外側にはカム従動ローラー39a, 39bが左右方向水平支軸で軸支され、各シーソー運動体37a, 37bの内端側と台車16側との間に掛張された引張スプリング40a, 40bにより、各シーソー運動体37a, 37bの内端側が台車16側のストッパー41a, 41bで受け止められるように各

シーソー運動体37a，37bが付勢されている。従って、両カム従動ローラー39a，39bに下向きの操作力が働いていない状況では、各係止具34a，34bが係止作用上位置に保持されると共に両棒状昇降体38a，38bが上昇限まで上昇して両カム従動ローラー39a，39bが上昇限に同心状で位置する状態にある。

[0028] 左右一対の係止具34a，34bは、図10に示すように、被搬送物支持用ハンガー8の左右一対のハンガーアーム10a，10bにおける被搬送物支持部9cの基部で構成された被係止部42a，42bを前後から挟む前後一対の係止部43a，43bから構成されている。これら各係止部43a，43bは、各係止具34a，34bが係止作用上位置にあるとき（シーソー運動体37a，37bが水平姿勢にあるとき）に左右方向水平向きとなる支軸で軸支されたローラーから構成され、搬送経路12における台車走行方向側に位置する前側係止部43aのローラーは、シーソー運動体37a，37bの外端から連設されたL形アーム部44aの先端に軸支され、ハンガー8を後押しする後側係止部43bのローラーは、シーソー運動体37a，37bの外端から連設された軸受け部材44bに前記ローラーを軸支する支軸と平行な支軸45で中間位置が軸支されたレバーアーム46の上端に軸支されて、前側係止部43aのローラーに対して遠近方向（前後方向）に一定範囲内で移動可能に構成され、前記レバーアーム46の下端部を押圧付勢するスプリング47により、前側係止部43aのローラーとの間に被係止部42a，42bが相対的に嵌入する凹部を形成する位置に付勢保持されている。尚、前記スプリング47は、軸受け部材44bの先端に支軸48で軸支され且つレバーアーム46の下端部を貫通する軸杆49の遊端部に螺嵌されたバネ受け座50aと、当該軸杆49に軸方向遊動自在に遊嵌された可動バネ受け座50bとの間で軸杆49に遊嵌され、可動バネ受け座50を介してレバーアーム46の下端部を付勢する。

[0029] 上記構成の左右一対の係止具34a，34bには、過負荷検知用センサー51がそれぞれ併設されている。このセンサー51は、軸受け部材44bに取り付けられたリミットスイッチから構成されたもので、各係止具34a，34bにおけるレバーアーム46の上端外側に付設された当接部材46aを介して、当該レバーアーム46（後側係止部43b）がスプリング47の付勢力に抗して一定角度揺動したことを検知する。

[0030] 係止具位置切り換え手段35aは、図2に示すように被搬送物受取手段14の昇降台

26に設けられ、係止具位置切り換え手段35bは、図7に示すように被搬送物戻し手段15の昇降台31に設けられており、各係止具位置切り換え手段35a，35bは、台車16が被搬送物受取手段14の昇降ガイドレール25又は被搬送物戻し手段15の昇降ガイドレール30の定位置に乗り移ったとき、図8及び図9に示すように、当該台車16の両カム従動ローラー39a，39bが各別に嵌合する左右一対のカムレール52a，52bと、両カムレール52a，52bを支持する1つの昇降台53を昇降駆動するカムレール駆動手段（シリンダーユニット）54とから構成されている。

[0031] 被搬送物受取手段14の昇降台25bに設けられた台車用フィーダー28と被搬送物戻し手段15の昇降台29bに設けられた台車用フィーダー32とは、図8及び図12に示すように、台車16の底部の左右一側部に下向きに突設された被把持部55を前後から挟持する前後一対の開閉挟持片56a，56bと、この開閉挟持片56a，56bの開閉用駆動手段57と、前記開閉挟持片56a，56bを前後方向に往復移動させる移動用駆動手段58とから構成されている。具体的に説明すると、前後一対の開閉挟持片56a，56bと開閉用駆動手段57とは、昇降台25b，29bに付設されたスライドガイドレール59を介して昇降ガイドレール25a，29a上での台車16の前後移動方向に移動自在に支持された可動部材60に取り付けられ、移動用駆動手段58は、前記可動部材60に一端が連結され且つ昇降台25b，29bに付設されたスライドガイド61によって前後方向移動自在に支持された中継ロッド62の他端と昇降台25b，29bとの間に介装されたシリンダーユニット63によって構成されている。

[0032] 前後一対の開閉挟持片56a，56bは、それぞれ支軸64a，64bによって前記可動部材60に軸支されると共に、リンク65によって互いに連動して開閉運動するように連動連結され、一方の開閉挟持片56aと前記可動部材60との間に、開閉用駆動手段57を構成するシリンダーユニット66が介装されている。従って、シリンダーユニット66のピストンロッドの出し入れにより前後一対の開閉挟持片56a，56bを開閉動作させることができ、シリンダーユニット63のピストンロッドの出し入れにより、前後一対の開閉挟持片56a，56bを開閉用駆動手段57（シリンダーユニット66）と共に前後移動させることができる。

[0033] 以下、上記構成の搬送設備の使用方法について説明すると、トロリーコンベヤ1の

駆動区間Dを駆動解除区間Fに向かって走行する走行体5、即ち、ハンガー8により被搬送物Wを吊り下げた走行体5は、図1及び図2に示す駆動区間Dの終端位置（駆動解除区間Fの始端位置）P1で駆動解除されるので、フリーライン2に併設された適当な補助フィーダー（図示省略）により、被搬送物受取手段14の上方定位置にハンガー8が位置する定停止位置P2まで移動させる。勿論、トロリーコンベヤ1の駆動区間Dの終端位置P1で走行体5を精度良く停止させることができるならば、前記駆動区間Dの終端位置P1を被搬送物受取手段14に対する定停止位置P2の位置に設定して、前記補助フィーダーを無くすことも可能である。

[0034] 一方、被搬送物受取手段14では、昇降台25bを下降限レベルLに下降させ、台車式搬送装置11における台車戻り経路13のガイドレール17上から被搬送物受取手段14における昇降ガイドレール25a上の定位置まで1台の空台車16を、台車戻り経路13の終端に併設されている摩擦駆動手段21と前記昇降台25b側の台車引き込み手段27とで移載させる。台車戻り経路13上の空台車16のハンガー係止手段20は、その左右一対の係止具34a，34bが、図9に示すスプリング40a，40bの付勢力で係止作用上位置に保持されている状態であるから、当該空台車16を引き込む側の被搬送物受取手段14側では、昇降台25bに配設されている係止具位置切り換え手段35aのカムレール52a，52bをカムレール駆動手段（シリンダーユニット）54により下降限レベルまで下げておき、昇降ガイドレール25a上に引き込まれる空台車16のハンガー係止手段20における左右一対のカム従動ローラー39a，39bを係止具位置切り換え手段35aのカムレール52a，52b内に進入させる（図9A参照）。そして空台車16が定位置まで引き込まれて停止したならば、係止具位置切り換え手段35aのカムレール52a，52bをカムレール駆動手段（シリンダーユニット）54により上昇限レベルまで上昇させ、カム従動ローラー39a，39bを介してシーソー運動体37a，37bをスプリング40a，40bの付勢力に抗して揺動させることにより、左右一対の係止具34a，34bを係止解除下位置に切り換えておく（図9B参照）。尚、図1に示すように、空台車16が定位置に移載された被搬送物受取手段14の昇降台25bは、下降限レベルLと上昇限レベルHとの間の中間レベルまで上昇させた状態で待機させておくことができる。

[0035] 先に述べたように、トロリーコンベヤ1の走行体5が被搬送物受取手段14に対する定停止位置P2で停止したならば、図3に示すように、空台車16を定位置に支持している被搬送物受取手段14の昇降台25bを上昇限レベルHまで上昇させる。この結果、空台車16の被搬送物支持具19が走行体5のハンガー8に支持されていた被搬送物Wを持ち上げ、当該被搬送物Wをハンガー8から所定高さdだけ浮上させることになる。このとき、係止解除下位置に切り換えられているハンガー係止手段20の左右一対の係止具34a，34bは、図11Aに示すように、被搬送物Wを支持していたハンガー8の被係止部42a，42bよりも一定距離だけ前方で且つ下方位置にある。又、被搬送物受取手段14の昇降台25bに配設されている台車用フィーダー28は、図12Aに示すように前後一対の開閉挟持片56a，56bが、当該昇降ガイドレール25a上の定位置に停止した台車16の被把持部55の真下位置で前後に開いた状態（シリンダーユニット66のピストンロッドが引き込まれた状態）にある。

[0036] 昇降ガイドレール25a上の台車16で走行体5のハンガー8から被搬送物Wを受け取らせたならば、図12Bに示すように、台車用フィーダー28におけるシリンダーユニット66のピストンロッドを進出させて前後一対の開閉挟持片56a，56bを閉動させることにより、被搬送物Wを支持している台車16の被把持部55を前後一対の開閉挟持片56a，56bで前後から挟持させる。係る状態で移動用駆動手段58のシリンダーユニット63により可動部材60を一定距離sだけ後方に移動させることにより、図4に示すように、当該台車16を昇降ガイドレール25a上で後方に一定距離sだけ移動させる。このとき、ハンガー係止手段20が台車16に設けられているので、図4及び図11Bに示すように、係止解除下位置に切り換えられているハンガー係止手段20の左右一対の係止具34a，34bもハンガー8に対して後方へ一定距離sだけ移動し、当該左右一対の係止具34a，34bがハンガー8の被係止部42a，42bの真下位置に位置することになる。而して、当該係止具34a，34bと一体に後方に移動するカム従動ローラー39a，39bは、昇降台25b側にあって後方には移動しないカムレール52a，52b内を移動することになるが、この移動によってカム従動ローラー39a，39bがカムレール52a，52b内からは離脱しないように、当該カムレール52a，52bの長さが設定されている。従って、係る状態で係止具位置切り換え手段35aのカムレール52a，52bをカムレ

ール駆動手段(シリンダーユニット)54により下降限レベルまで下降させ、カム従動ローラー39a, 39bを介して台車16側のシーソー運動体37a, 37bをスプリング40a, 40bの付勢方向に水平姿勢まで揺動復帰させることにより(図9A参照)、左右一対の係止具34a, 34bを係止解除下位置から係止作用上位置に切り換えて、図5及び図11Cに示すように、各係止具34a, 34bをハンガー8の被係止部42a, 42bに係止させる。即ち、各係止具34a, 34bの前後一対の係止部(ローラー)43a, 43b間にハンガー8の被係止部42a, 42bを嵌合させる。

[0037] 被搬送物受取手段14における上記の一連の動作により、図2に示すように、トロリーコンベヤ1のハンガー8で支持されて吊下搬送されていた被搬送物Wは、当該ハンガー8に対して持ち上げられると共に後方に一定距離sだけ移動せしめられた状態で台車16の被搬送物支持具19に支持され、被搬送物Wの支持から開放されたハンガー8は、ハンガー係止手段20を介して台車16に係止されることになる。従って、当該被搬送物Wの左右両側の作業部位(例えば自動車車体に対する前側左右両ドアーの取付部位)Waが、当該被搬送物Wがトロリーコンベヤ1のハンガー8で支持されて吊下搬送されていたときに当該ハンガー8の左右一対のハンガーアーム10a, 10bにおける縦杆部9aと横から見て重なる位置にあったとしても、この被搬送物Wがハンガー8から台車16上に移載された最終段階では、図5に示すように前記作業部位Waは、当該被搬送物Wの左右両側に位置するハンガー8の左右一対のハンガーアーム10a, 10bにおける縦杆部9aから横から見て後方に外れた位置に移動したことになる。換言すれば、このような結果となるように被搬送物受取手段14上での台車用フィーダー28による台車16の後方への移動距離sが設定されている。

[0038] 次に、台車用フィーダー28におけるシリンダーユニット66のピストンロッドを引き込み移動させて前後一対の開閉挟持片56a, 56bを開動させ、当該開閉挟持片56a, 56bを台車16側の被把持部55より下側レベルに逃がした後、直ちに、又はこの後の適当な時期に、移動用駆動手段58のシリンダーユニット63により可動部材60を一定距離sだけ前方に移動復帰させ、この台車用フィーダー28を元の待機状態に戻す。前記のように開閉挟持片56a, 56bを開動させて台車16側の被把持部55より下側レベルに逃がしたならば、図6に示すように、この被搬送物受取手段14における昇降

ガイドレール25a上の台車16を台車引き込み送り出し手段27により搬送経路12のガイドレール17上に送り出すと共に当該搬送経路12が備える摩擦駆動手段21により当該搬送経路12上で定速走行駆動することにより、被搬送物支持具19で支持する被搬送物Wを搬送経路12上で定速搬送すると共に、当該被搬送物Wの支持から開放された状態のハンガー8を備えたトロリーコンベヤ1の走行体5を、当該ハンガー8とハンガー係止手段20とを介して、台車16が走行する搬送経路12と平行な駆動解除区間Fのフリーライン2に沿って当該台車16により牽引移動させることができる。この状態において、例えば被搬送物Wの左右両側の作業部位Waに対する作業を、当該被搬送物Wと一体に移動するトロリーコンベヤ1の走行体5のハンガー8に邪魔されることなく、台車16上に搭乗した作業者によって遂行させることができる。

[0039] 上記の台車式搬送装置11における台車16での被搬送物Wの搬送過程において、ハンガー係止手段20により当該台車16に係止されて牽引されるトロリーコンベヤ1側の走行体5やハンガー8に何らかの障害が発生し、これら走行体5又はハンガー8の円滑な前進移動が妨げられるような事態が生じたときは、台車16側のハンガー係止手段20に過負荷が生じる。この過負荷は、ハンガー係止手段20における左右一対の係止具34a，34bを構成する後側係止部43bに後方向きに作用するので、結果として、後側係止部43bがスプリング47の付勢力に抗して後方に傾動し、この傾動をセンサー51が検知することになるので、当該センサー51の検知信号を利用して、当該台車16に非常停止をかけるなどの安全対策が自動的に講じられるように構成することができる。

[0040] トロリーコンベヤ1により吊下搬送される後続の各被搬送物Wも上記の一連の動作により被搬送物受取手段14において台車式搬送装置11の台車16上に移載すると共に、当該被搬送物Wを吊下搬送していたトロリーコンベヤ1の走行体5もハンガー8を介して台車16に係止し、吊下搬送していた被搬送物Wと一体に台車16により台車式搬送装置11の搬送経路12上に順次送り込み、各台車16が前後に突き合う状態で定速搬送させ、その間に各台車16上の被搬送物Wに対して所定の作業を遂行させることができる。

[0041] 台車式搬送装置11の搬送経路12の終端に達した台車16は、被搬送物戻し手段1

5の昇降ガイドレール29a上に移載させる。即ち、図7に示すように、被搬送物戻し手段15の昇降台29bを昇降駆動手段30により上昇限レベルHまで上昇させ、昇降ガイドレール28aを台車式搬送装置11の搬送経路12のガイドレール17に接続させておく。そして台車式搬送装置11の搬送経路12の終端の摩擦駆動手段21で昇降ガイドレール29a上に台車16が送り出されたならば、昇降台29b側の台車引き込み送り出し手段31により当該台車16を昇降ガイドレール29a上の定位置まで引き込み、停止させる。このとき、図1及び図7に示すように、当該台車16にハンガー係止手段20で係止されて牽引されてきたトロリーコンベヤ1の走行体5(ハンガー8)は、トロリーコンベヤ1における駆動解除区間Fの終端位置(駆動区間Dの始端位置)P4より一定距離だけ上手側の定停止位置P3で停止することになる。又、ハンガー8を係止しているハンガー係止手段20のカム従動ローラー39a, 39bは、昇降台29b側の係止具位置切り換え手段35bの下降限位置に下げられているカムレール52a, 52b内に進入し、昇降台29b側の台車用フィーダー32の前後一対の開閉挟持片56a, 56bは、後退限位置(シリンダーユニット63のピストンロッドが引き込まれた位置)にあって且つ開動した状態にあり、台車16側の被把持部55は、当該開動した状態にある前後一対の開閉挟持片56a, 56b間の真上で停止することになる。

[0042] 被搬送物Wを支持すると共に当該被搬送物Wから切り離されたハンガー8を介してトロリーコンベヤ1の走行体5を牽引移動させてきた台車16が被搬送物戻し手段15の台車引き込み送り出し手段31により昇降ガイドレール29a上の定位置まで引き込まれて停止したならば、次に、図7に示すように、昇降台29b側の係止具位置切り換え手段35bのカムレール52a, 52bをシリンダーユニット54により上昇限まで上昇させ、当該カムレール52a, 52bに進入しているカム従動ローラー39a, 39bを押し上げてシーソー運動体37a, 37bをスプリング40a, 40bの付勢力に抗して傾動させ、以て、左右一対の係止具34a, 34bを係止作用上位置から係止解除下位置に切り換え、ハンガー8における左右一対のハンガーアーム10a, 10bの被係止部42a, 42bから下方に離脱させる(図9B及び図11B参照)。このようにして台車16からハンガー8を切り離した状態で、次に昇降台29b側の台車用フィーダー32の前後一対の開閉挟持片56a, 56bを開閉用駆動手段57のシリンダーユニット66により閉動させ、真上位置

で停止している台車16の被把持部55を挟持させ、続いて当該台車用フィーダー32の移動用駆動手段58のシリンダーユニット63により当該開閉挟持片56a，56bを一定距離sだけ前進移動させる。この結果、支持している被搬送物Wと共に台車16が一定距離sだけ昇降ガイドレール29a上で前進移動し、当該台車16が支持している被搬送物Wが、定停止位置P3で停止したままのトロリーコンベヤ1の走行体5におけるハンガー8に対して一定距離sだけ前進移動することになる。

[0043] 上記の被搬送物戻し手段15での一連の動作により、被搬送物Wとハンガー8との前後方向の相対位置関係が、トロリーコンベヤ1における走行体5のハンガー8から台車式搬送装置11の台車16に移し替られる以前の状態、即ち、トロリーコンベヤ1で吊下搬送されているときのハンガー8と被搬送物Wとの前後方向相対位置関係に戻されたことになる。係る状態で、次に台車用フィーダー32の開閉挟持片56a，56bを開動させ、台車16の被把持部55に対する挟持を解除した後、この被搬送物戻し手段15の昇降駆動手段30により昇降台29b（昇降ガイドレール29a）を上昇限レベルHから下降限レベルLまで降下させると、これに伴って下降する台車16の被搬送物支持具19で支持されていた被搬送物Wが下降途中でハンガー8の左右一対のハンガーアーム10a，10bにおける被搬送物支持部9cに乗り移り、当該ハンガー8で支持される状態に戻される。一方、昇降ガイドレール29a上の空になった台車16は、昇降台29bが下降限レベルLに達して台車式搬送装置11の台車戻り経路13のガイドレール17と接続する状態になった昇降ガイドレール29a上から、当該昇降台29b側の台車引き込み送り出し手段31と台車戻り経路13側の摩擦駆動手段21とにより台車戻り経路13内に送り出されると共に当該台車戻り経路13上で被搬送物受取手段14に向けて搬送される。

[0044] 台車16の下降により当該台車16から切り離されてハンガー8上に戻された被搬送物Wは、当該ハンガー8を備えた走行体5、即ち、定停止位置P3で停止しているトロリーコンベヤ1の走行体5を、トロリーコンベヤ1における駆動解除区間Fの終端位置（駆動区間Dの始端位置）P4までフリーライン2に沿って併設された適当な補助フィーダーにより移動させることにより、トロリーコンベヤ1のパワーライン3を移動するプッシャーにより駆動解除区間Fの下手側の駆動区間Dにおいて再び推進させ、被搬送物

Wを吊下搬送することができる。このときの被搬送物Wとハンガー8との間の前後方向相対位置関係は、駆動解除区間Fの入り口で台車式搬送装置11の台車16に移し替られる以前の状態と同一であることは明らかである。尚、定停止位置P3を駆動解除区間Fの下手側の駆動区間Dに入った位置に設定し、当該定停止位置P3で停止した走行体5の被動ドッグ6を適当な操作手段で下げておくなどして、当該定停止位置P3で停止した走行体5の被動ドッグ6には駆動区間Dにおけるパワーライン3のプッシャーが作用しないように構成し、ハンガー8への被搬送物Wの戻し作用が完了した時点で下げられていた被動ドッグ6を復帰させるなどして、当該定停止位置P3から直ちにトロリーコンベヤ1のパワーライン3を移動するプッシャーにより走行体5を推進させるようにして、定停止置P3から走行体5を所定位置まで移動させる補助フィーダーを無くすこともできる。

[0045] 本発明は以上の実施形態のように実施できるものであるが、台車式搬送装置11の台車16上での被搬送物Wに対する作業部位Waが、当該被搬送物Wを吊下搬送してきたトロリーコンベヤ1の走行体5におけるハンガー8から離れた位置であって、当該作業部位Waに対する作業に前記ハンガー8が邪魔にならない位置であるときは、台車16上に移載された被搬送物Wと当該被搬送物Wを支持していたハンガー8とを前後方向に相対移動させる手段及び行程は省くことができる。

産業上の利用可能性

[0046] 本発明に係る搬送設備は、例えば自動車のボディーにドアーなどの各種部品を取り付ける自動車組み立てラインにおける自動車ボディーの搬送設備として利用できる。

請求の範囲

[1] 被搬送物吊下式搬送装置と、台車式搬送装置と、被搬送物受取手段と、被搬送物戻し手段とを備えた搬送設備であって、

前記被搬送物吊下式搬送装置は、被搬送物支持用ハンガーが設けられた走行体を備えると共に、この走行体の走行経路中には、当該走行体を強制走行させる駆動区間と、当該走行体を移動自由な状態とする駆動解除区間とが設けられ、

前記台車式搬送装置は、前記走行体の走行経路の駆動解除区間の下側で当該走行経路に沿って走行可能な台車を備えると共に、当該台車上には被搬送物支持具が設けられ、

前記被搬送物受取手段は、前記台車式搬送装置の搬送開始端において前記被搬送物支持具を前記走行体のハンガーに対して相対的に上げて当該ハンガーから被搬送物を前記被搬送物支持具に移載する手段であり、

前記被搬送物戻し手段は、前記台車式搬送装置の搬送終了端において前記被搬送物支持具を前記走行体のハンガーに対して相対的に下げて当該被搬送物支持具からハンガーに被搬送物を移載する手段である搬送設備において、

前記被搬送物吊下式搬送装置の走行体の被搬送物支持用ハンガーには、被係止部が設けられ、

前記台車式搬送装置の台車には、前記ハンガーの被係止部に対し係脱自在なハンガー係止手段が設けられ、

前記台車式搬送装置の搬送経路では、前記ハンガー係止手段が前記ハンガーの被係止部と係合し、駆動解除状態に切り換えられている前記被搬送物吊下式搬送装置の走行体を前記台車が前記ハンガーを介して牽引移動させるように構成されている搬送設備。

[2] 前記被搬送物吊下式搬送装置は、その走行体の走行経路に沿って移動するプッシャーで当該走行体を推進させるトロリーコンベヤにより構成され、

前記走行体の駆動解除区間では、前記プッシャーが走行体から切り離されて駆動解除状態に切り換えられるように構成された、請求項1に記載の搬送設備。

[3] 前記被搬送物受取手段及び被搬送物戻し手段は、前記台車式搬送装置の台車

自体を昇降させる昇降台によって構成されている、請求項1に記載の搬送設備。

[4] 前記ハンガー係止手段は、前記台車式搬送装置の搬送開始端においてハンガーから被搬送物を受け取った被搬送物支持具と当該ハンガーとが相対的に一定距離前後方向に移動したときにハンガー側の被係止部に対応する位置に設けられ、

前記台車式搬送装置の搬送終了端においては、被搬送物を支持する被搬送物支持具とハンガーとを元の前後方向相対位置に戻した後、前記被搬送物戻し手段を動作させるように構成された、請求項1に記載の搬送設備。

[5] 前記台車式搬送装置の搬送開始端及び搬送終了端における被搬送物支持具とハンガーとの相対的前後方向移動が、前記台車自体の前後方向移動により行われるように構成された、請求項4に記載の搬送設備。

[6] 前記台車式搬送装置は、自走できない台車を搬送経路側に配設された台車駆動手段により推進させる構成のものであり、

前記被搬送物受取手段には、台車を搬送経路側へ送り出す台車送り出し手段と、支持する台車を、前記ハンガー係止手段がハンガーの被係止部に対応する位置まで前後方向に移動させる台車用フィーダーとが設けられ、

前記被搬送物戻し手段には、搬送経路から送り込まれる台車を所定位置まで引き込む台車引き込み手段と、支持する被搬送物とハンガーとが元の前後方向相対位置に戻るように台車を前後方向に復帰移動させる台車用フィーダーとが設けられている、請求項5に記載の搬送設備。

[7] 前記被搬送物受取手段と前記被搬送物戻し手段の台車用フィーダーは、台車に設けられた被把持部を前後から挟持する前後一対の開閉挟持片と、この開閉挟持片の開閉用駆動手段と、前記開閉挟持片を前後方向に往復移動させる移動用駆動手段とから構成されている、請求項6に記載の搬送設備。

[8] 前記ハンガーは左右一対のハンガーアームを備え、

前記ハンガー係止手段は、左右各ハンガーアームに設けられた被係止部に対し係脱自在な左右一対の係止具と、この左右一対の係止具を連動させて係脱動作させる1つの係止具位置切り換え手段とから構成されている、請求項1に記載の搬送設備。

[9] 前記左右一対の係止具は、ハンガー側の被係止部に係合する上位置にスプリング

により付勢保持され、

前記台車には、各係止具それぞれに連動して昇降するカム従動ローラーが設けられ、

前記係止具位置切り換え手段は、前記被搬送物受取手段及び被搬送物戻し手段の位置に台車があるときに当該台車側の前記カム従動ローラーと係合するように前記被搬送物受取手段及び被搬送物戻し手段にそれぞれ併設されたカムレールと、これらカムレールを昇降させるカムレール駆動手段とから構成されている、請求項8に記載の搬送設備。

[10] 前記左右一対の係止具は、左右横向きに配置され且つ中間に支点を有する左右一対のシーソー運動体の外端にそれぞれ設けられ、両シーソー運動体の内端に昇降体が連動連結されると共に当該昇降体の下端に前記カム従動ローラーが軸支されている、請求項9に記載の搬送設備。

[11] 前記ハンガー係止手段は、前記ハンガーに設けられた被係止部に対し上下方向に嵌合離脱自在な係止具と、この係止具を昇降移動させる係止具位置切り換え手段と、センサーとから成り、

前記係止具は、前記被係止部を挟む前後一対の係止部を備え、この前後一対の係止部の内、被係止部を後押しする後側係止部は、一定範囲内前後移動自在に構成されると共にスプリングにより前側定位置に付勢保持され、

前記センサーは、前記後側係止部が前記スプリングに抗して後方に移動したことを検知する、請求項1に記載の搬送設備。

[図1]

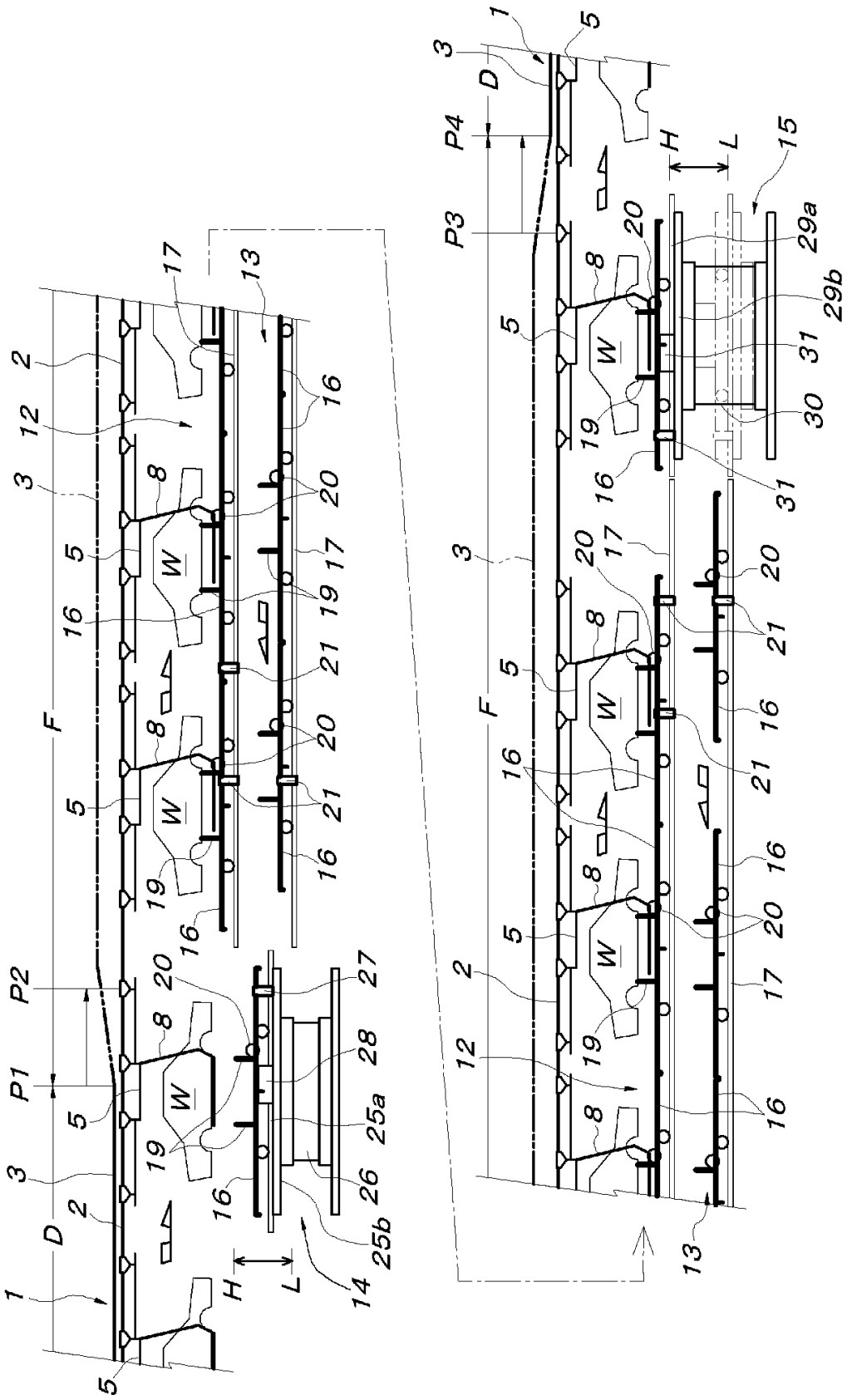
1
2
3
5
8
12
13
14
15
16
17
19
20
21
25a
25b
26
27
28
29a
29b
30
31
W
D
F
H
L
P1
P2
P3
P4

[図2]

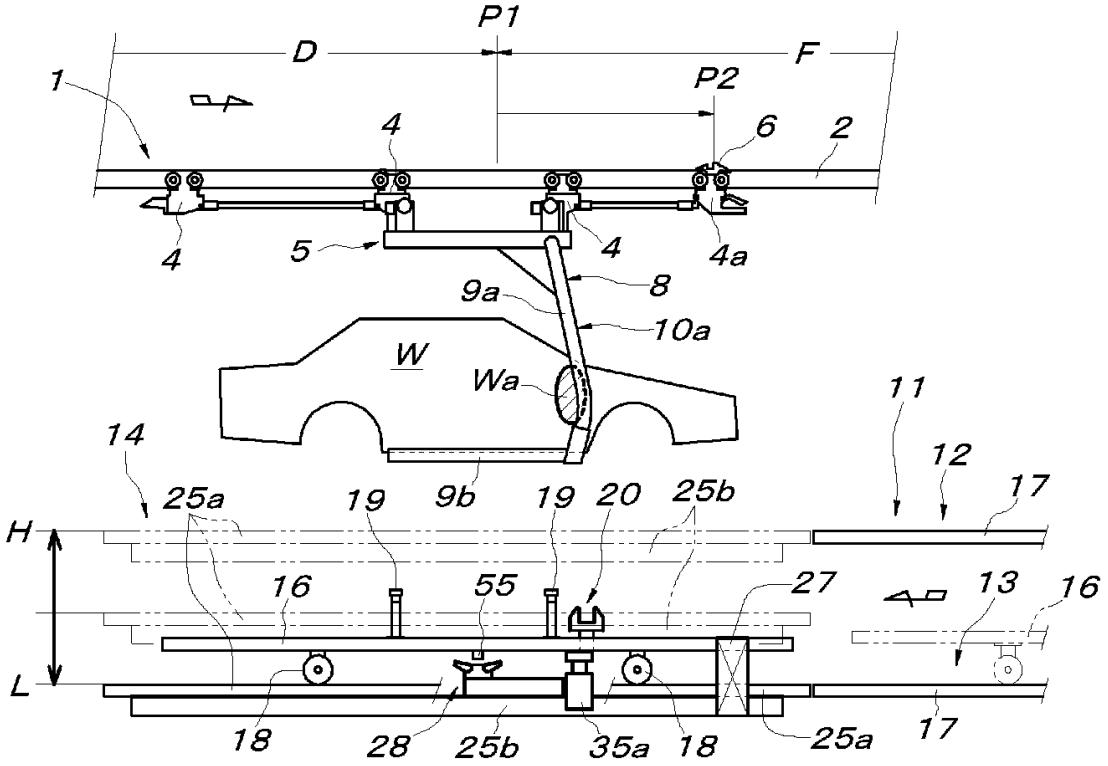
P1
D
F
1
P2
4
6
2
4
5
4
4a
9a
8
10a
W
Wa
11
14
12
25a
19
9b
19
20
25b
17
H
16
55
27
13
16
L
18
28
25b
35a
18
25a
17

[図3]

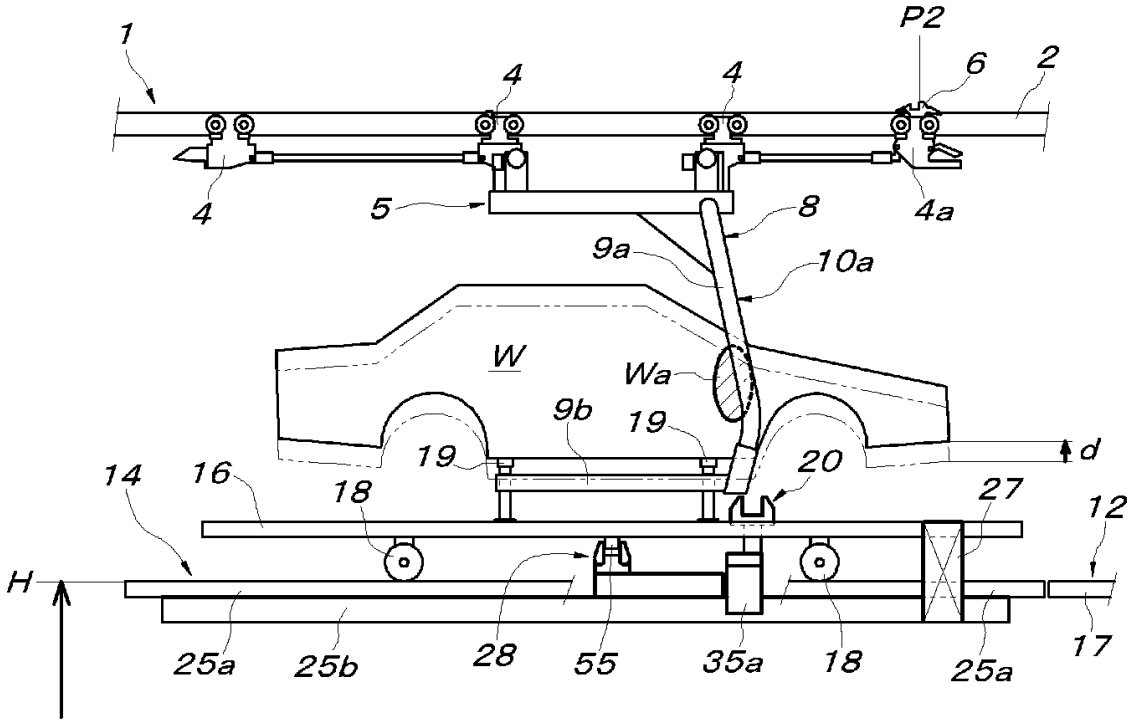
1
P2
4
4
6
2
4
5
8
4a
9a
10a
W
Wa
9b
19
19
d
14
16
18
20
27
12
H
25a
25b
28
55
35a
18
25a
17

[図4]

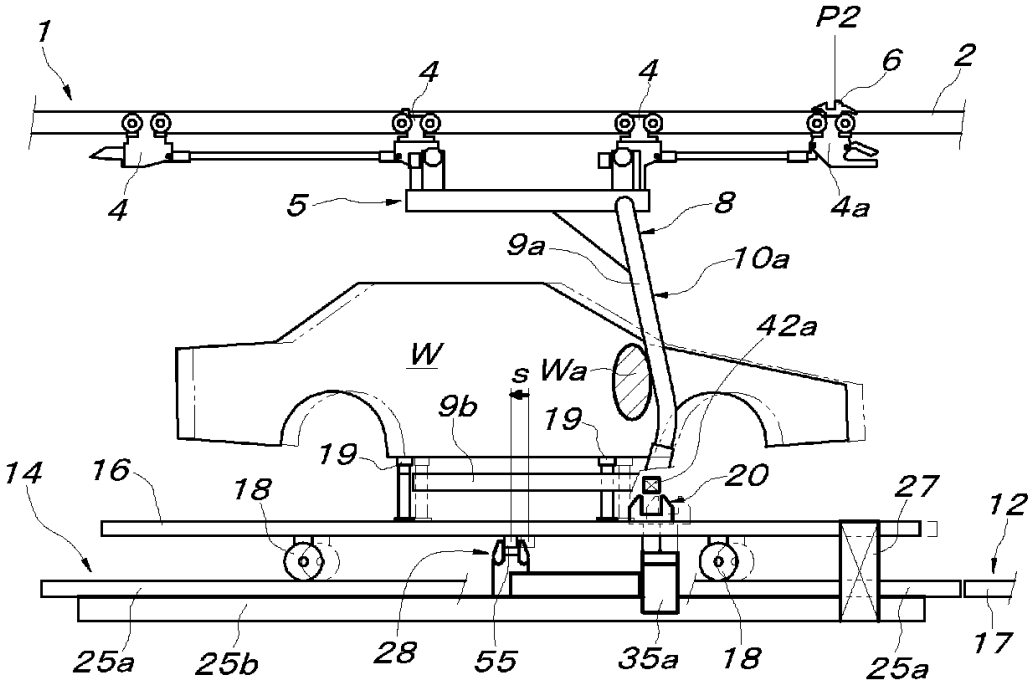
1
P2
6
2
4
4
4
5
8
4a
9a
10a
42a
W
s
Wa
9b
19
19
20
14
16
18
27
12
25a
25b
28
55
35a
18
25a
17

[図5]

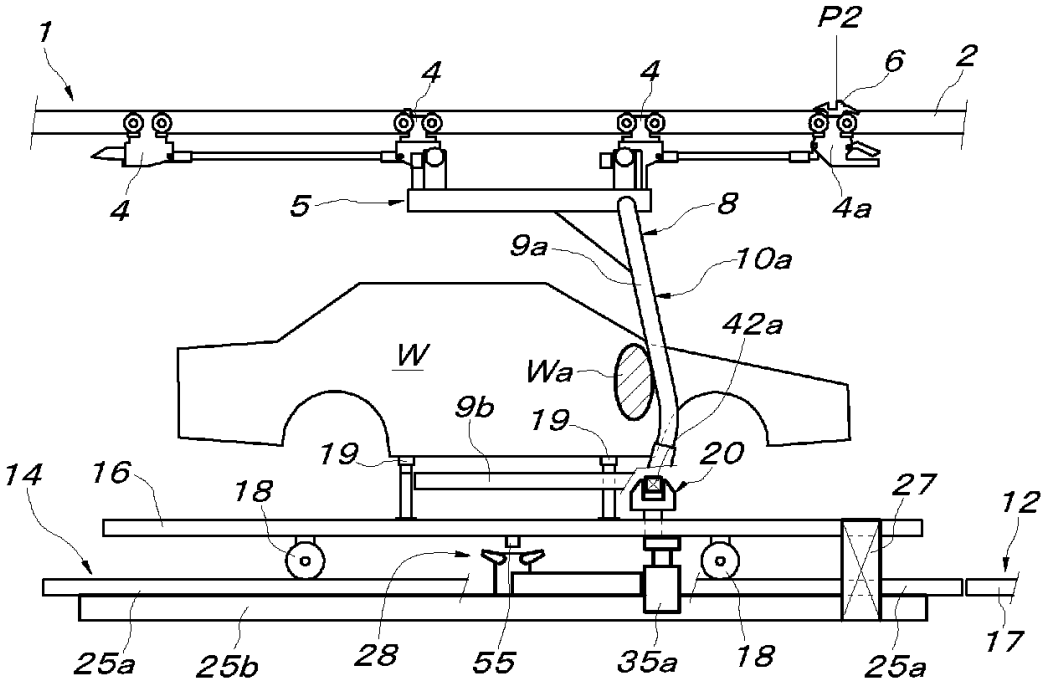
1
P2
6
2
4
4
4
5
8
4a
9a
10a
42a
W
Wa
9b
19
19
20
14
16
18
27
12
25a
25b
28
55
35a
18
25a
17

[図6]

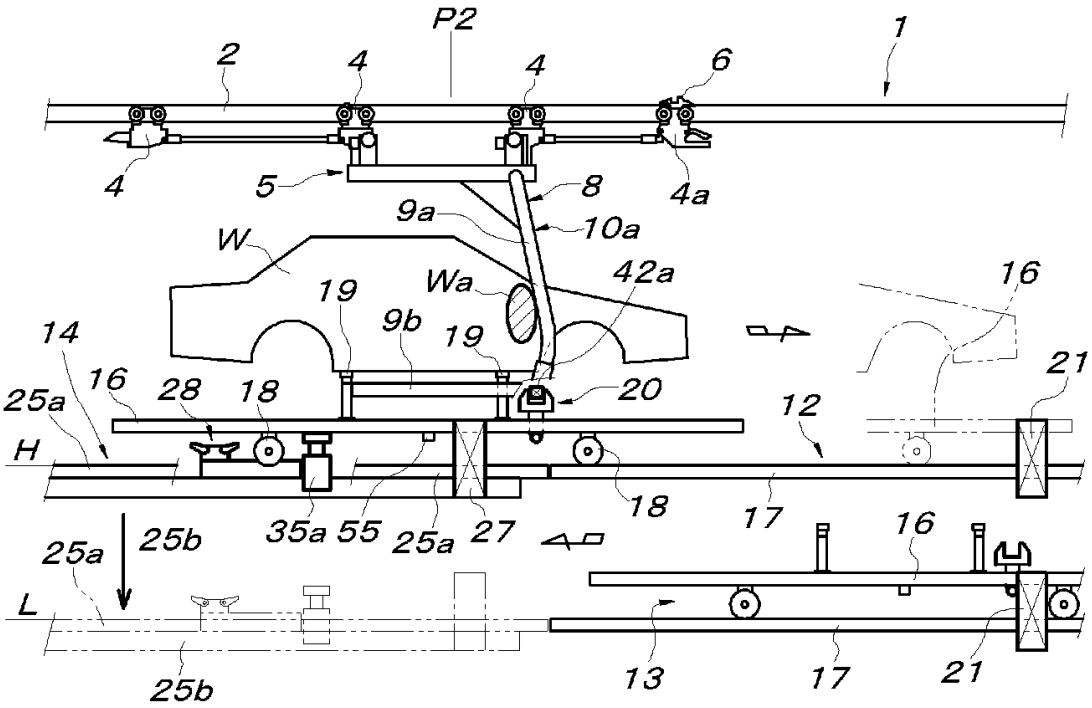
P2
1
2
4
4
6
4
5
8
4a
9a
10a
W
Wa
42a
16
19
9b
19
14
16
28
18
20
21
25a
12
H
18
35a
55
25a
27
17
16
25a
25b
L
13
17
21
25b

[図7]

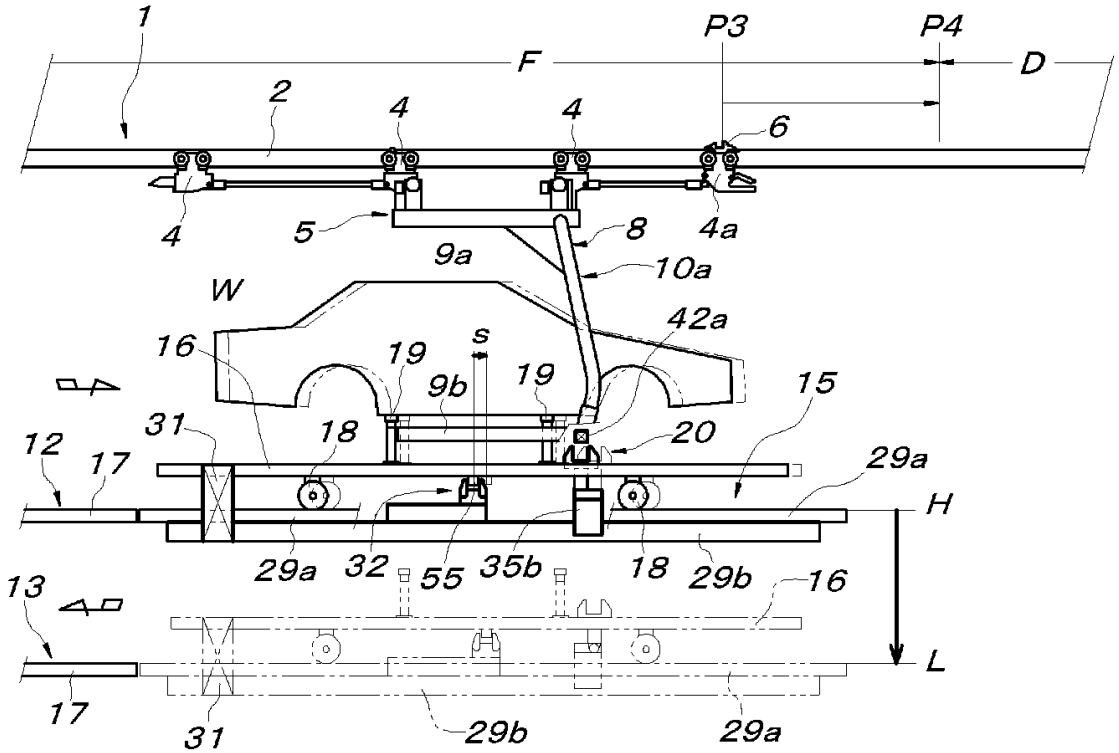
1
P3
P4
F
D
2
4
4
6
4
5
8
4a
9a
10a
W
42a
16
19
s
9b
19
15
31
18
20
12
17
29a
H
29a
32
55
35b
18
29b
16
13
L
17
31
29b
29a

[図8]

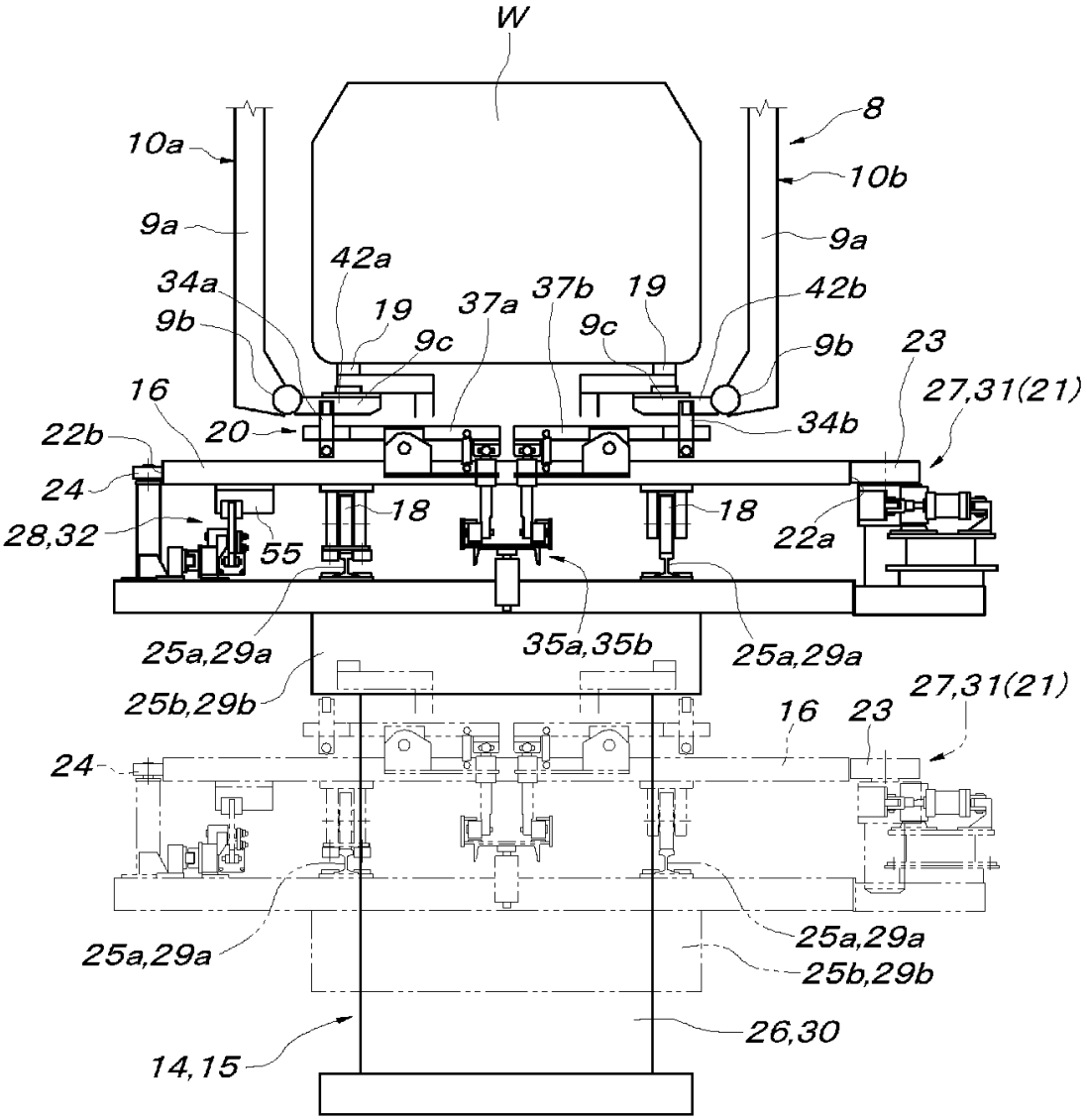
W
8
10a
10b
9a
9a
42a
34a
19
37a
37b
19
42b
9b
9c
9c
9b
23
16
27,31(21)
22b
20
34b
24
18
18
28,32
55
22a
25a,29a
35a,35b
25a,29a
25b,29b
27,31(21)
16
23
24
25a,29a
25a,29a
25b,29b
26,30
14,15

[図9]

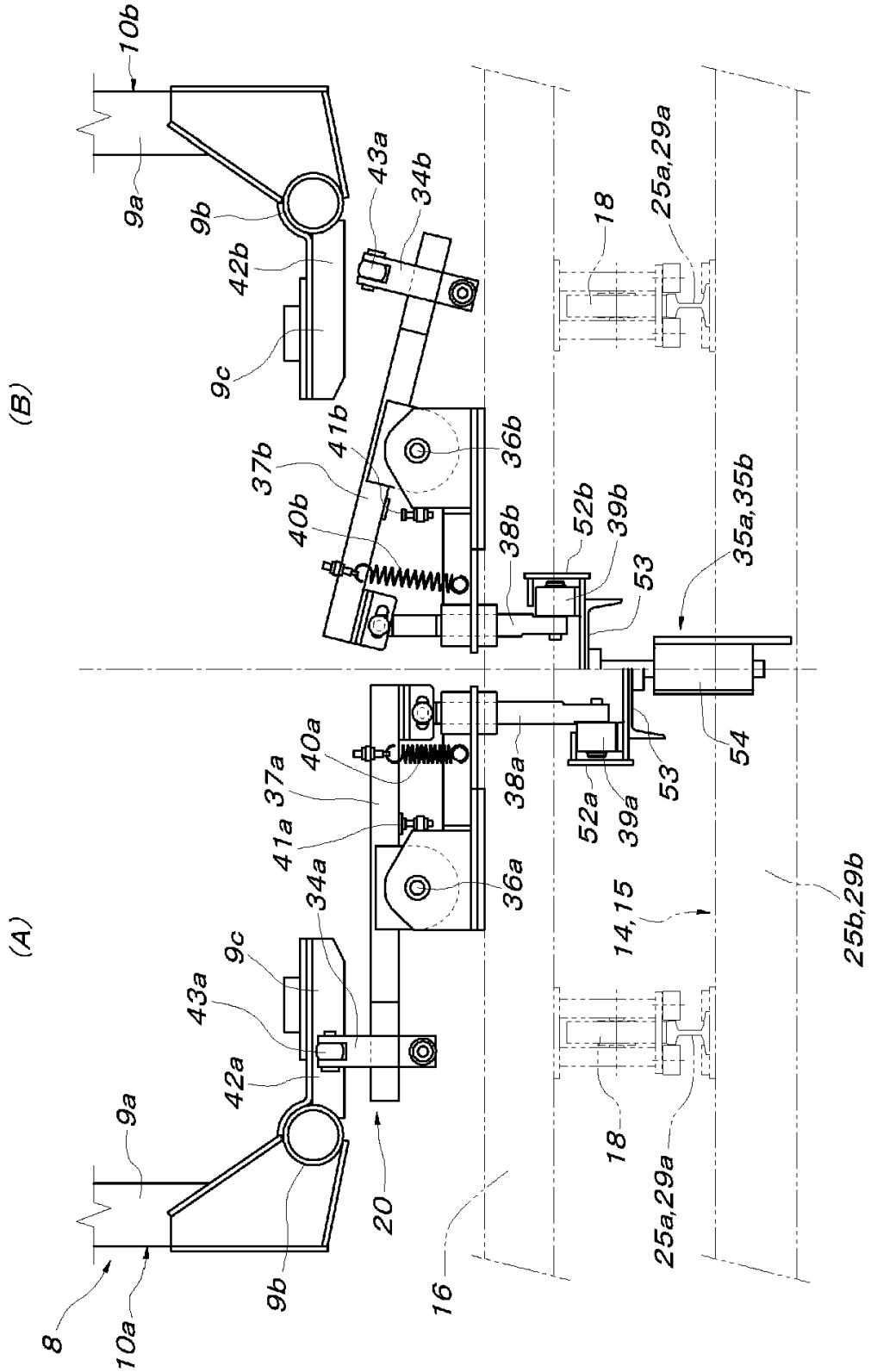
(A)
(B)
8
10a
9a
9b
9c
42a
43a
34a
20
16
37a
41a
40a
36a
38a
52a
39a
53
54
14,15
18
25a,29a
25b,29b
10b
42b
43a
34b
37b
41b
40b
36b
38b
52b
39b
35a,35b

[図10]

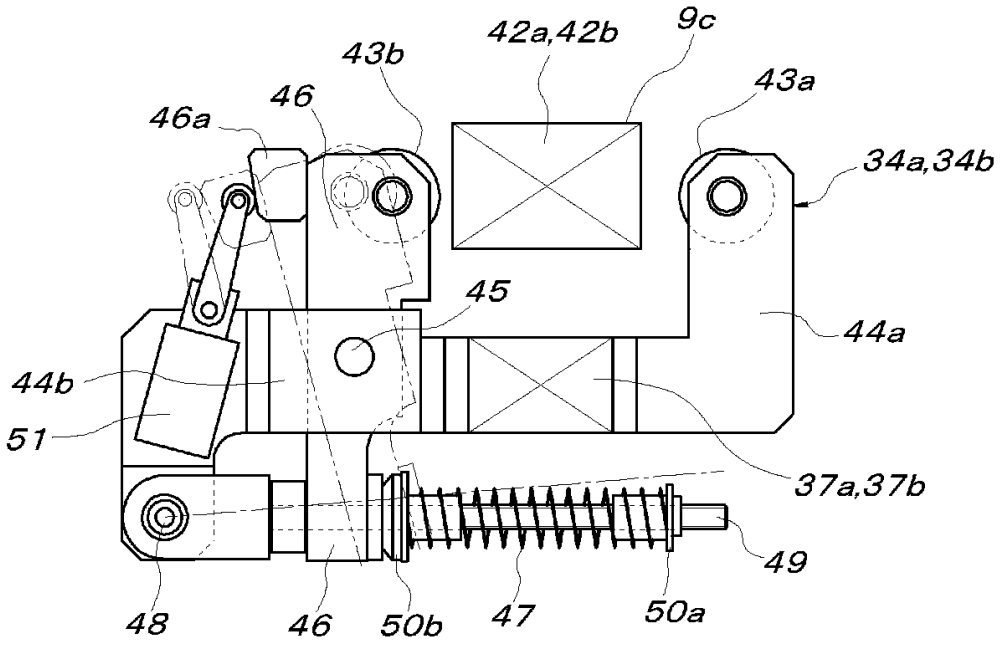
42a,42b
9c
43b
43a
46
46a
34a,34b
45
44a
44b
51
37a,37b
49
48
46
50b
47
50a

[図11]

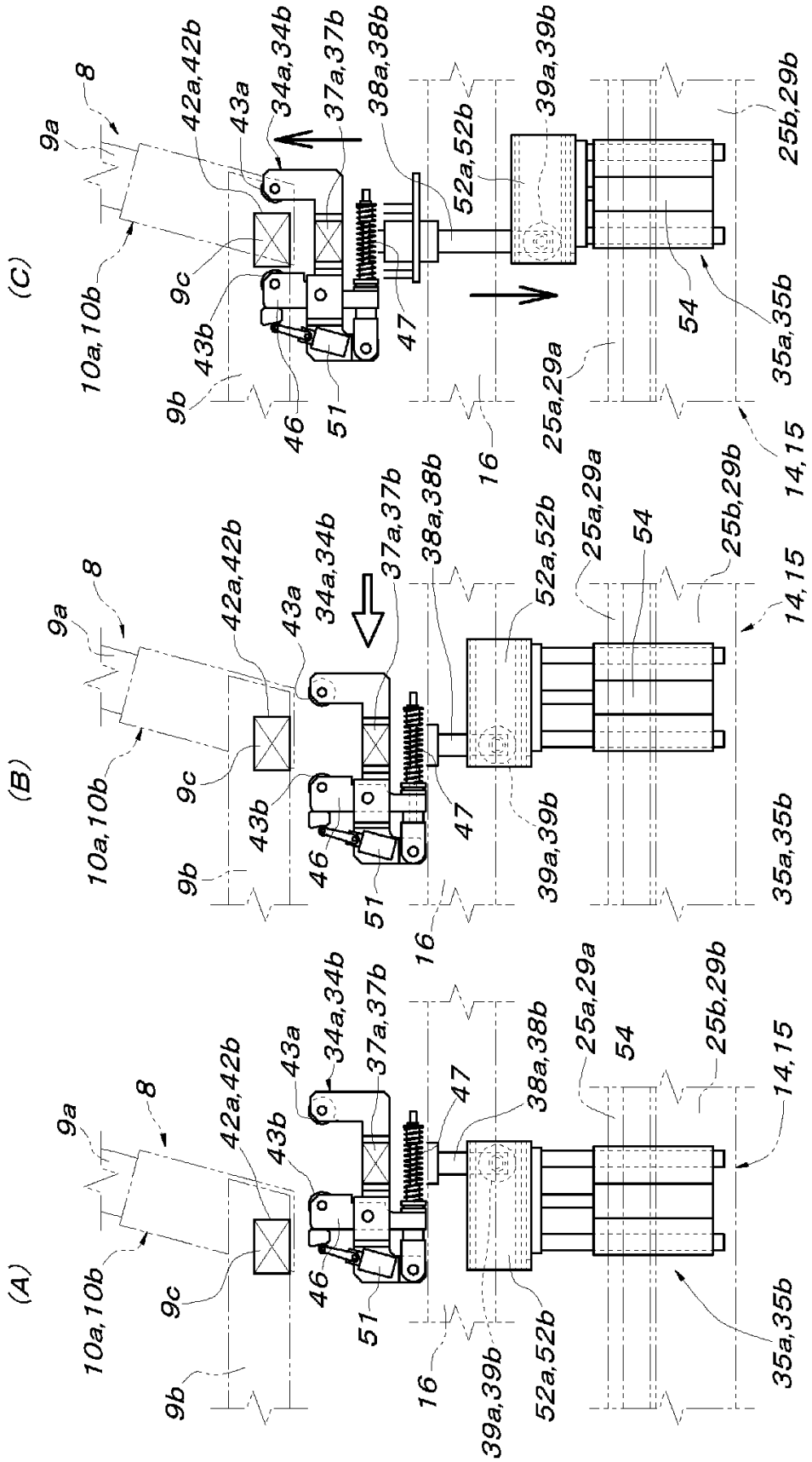
(A)
(B)
(C)
8
9a
9b
9c
10a,10b
14,15
16
25a,29a
25b,29b
34a,34b
35a,35b
37a,37b
38a,38b
39a,39b
42a,42b
43a
43b
46
47
51
52a,52b
54

[図12]

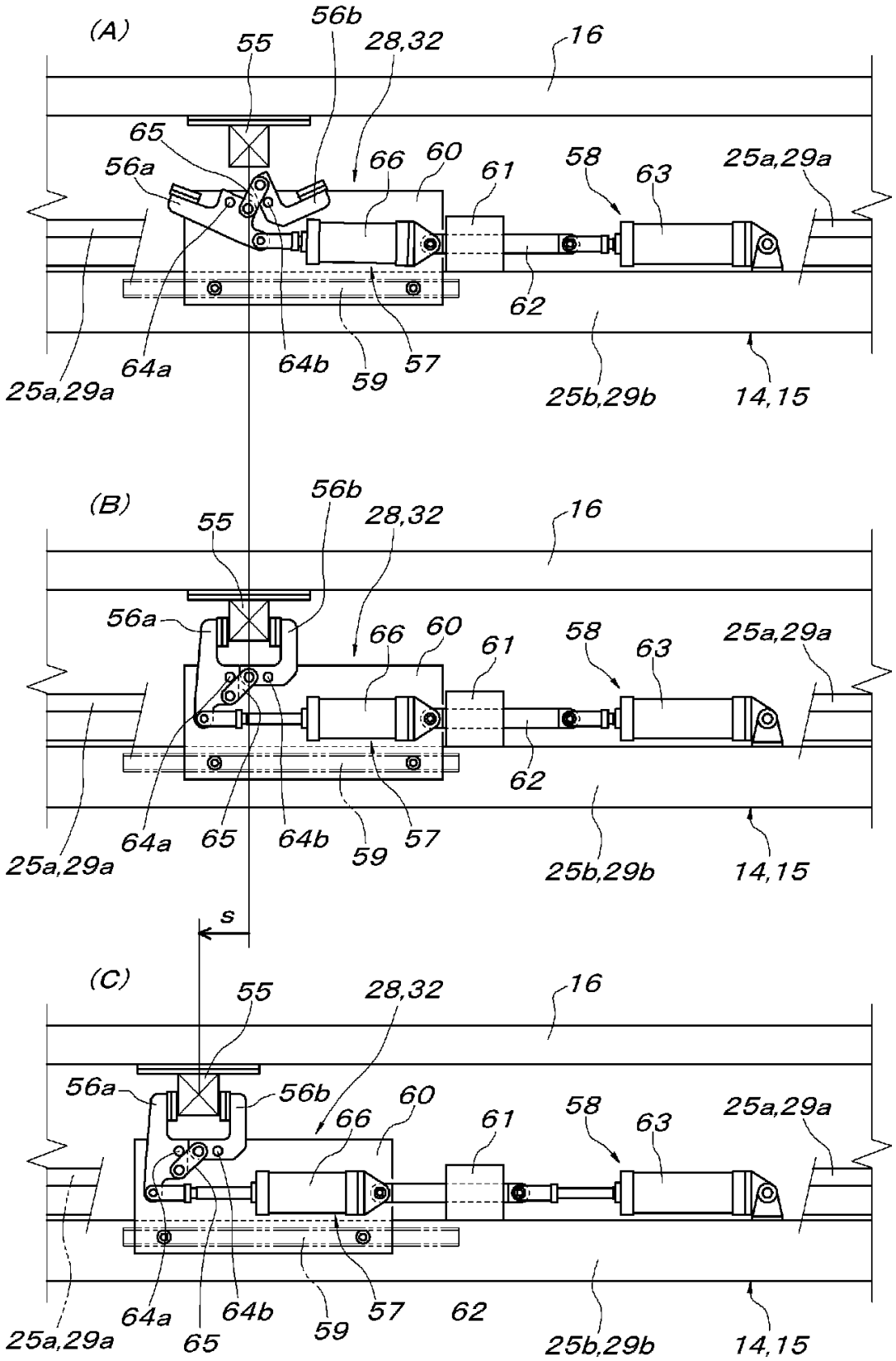
(A)
55
56b
28,32
16
65
56a
66
60
61
58
63
25a,29a
62
64a
64b
59
57
25a,29a
25b,29b
14,15
(B)
55
56b
28,32
16
56a
66
60
61
58
63
25a,29a
62
64a
65
64b
59
57
25a,29a
25b,29b
14,15
s
(C)
55
28,32
16
56a
56b
66
60
61
58
63
25a,29a
64a
64b
59
57
62
25a,29a
65
25b,29b
14,15

INTERNATIONAL SEARCH REPORT

International application No.
PCT/JP2006/314390

A. CLASSIFICATION OF SUBJECT MATTER
B61B10/02(2006.01)i, *B61B13/12*(2006.01)i, *B61J1/10*(2006.01)i, *B65G17/20*(2006.01)i

According to International Patent Classification (IPC) or to both national classification and IPC

B. FIELDS SEARCHED

Minimum documentation searched (classification system followed by classification symbols)
B61B10/00-04, B61B13/12, B61J1/10, B65G17/20, B65G35/00-08, B65G37/00

Documentation searched other than minimum documentation to the extent that such documents are included in the fields searched

Jitsuyo Shinan Koho	1922-1996	Jitsuyo Shinan Toroku Koho	1996-2006
Kokai Jitsuyo Shinan Koho	1971-2006	Toroku Jitsuyo Shinan Koho	1994-2006

Electronic data base consulted during the international search (name of data base and, where practicable, search terms used)

C. DOCUMENTS CONSIDERED TO BE RELEVANT

Category*	Citation of document, with indication, where appropriate, of the relevant passages	Relevant to claim No.
A	JP 6-115426 A (Daifuku Co., Ltd.), 26 April, 1994 (26.04.94), Par. Nos. [0026] to [0041]; Figs. 1 to 7 (Family: none)	1-11
A	JP 8-282836 A (Daifuku Co., Ltd.), 29 October, 1996 (29.10.96), Full text; all drawings (Family: none)	1-11
A	JP 2002-87346 A (Honda Motor Co., Ltd.), 27 March, 2002 (27.03.02), Full text; Figs. 1 to 3, 5 to 7 & US 6695126 B2 & GB 2373766 A & WO 2002/022433 A1 & CA 2390936 A1 & CN 1206125 C	1-11

☒ Further documents are listed in the continuation of Box C. ☐ See patent family annex.

* Special categories of cited documents:
"A" document defining the general state of the art which is not considered to be of particular relevance
"E" earlier application or patent but published on or after the international filing date
"L" document which may throw doubts on priority claim(s) or which is cited to establish the publication date of another citation or other special reason (as specified)
"O" document referring to an oral disclosure, use, exhibition or other means
"P" document published prior to the international filing date but later than the priority date claimed
"T" later document published after the international filing date or priority date and not in conflict with the application but cited to understand the principle or theory underlying the invention
"X" document of particular relevance; the claimed invention cannot be considered novel or cannot be considered to involve an inventive step when the document is taken alone
"Y" document of particular relevance; the claimed invention cannot be considered to involve an inventive step when the document is combined with one or more other such documents, such combination being obvious to a person skilled in the art
"&" document member of the same patent family

Date of the actual completion of the international search 17 October, 2006 (17.10.06)	Date of mailing of the international search report 31 October, 2006 (31.10.06)
Name and mailing address of the ISA/ Japanese Patent Office Facsimile No.	Authorized officer Telephone No.

INTERNATIONAL SEARCH REPORT

International application No.
PCT/JP2006/314390

C (Continuation). DOCUMENTS CONSIDERED TO BE RELEVANT

Category*	Citation of document, with indication, where appropriate, of the relevant passages	Relevant to claim No.
A	JP 2002-19946 A (Honda Motor Co., Ltd.), 23 January, 2002 (23.01.02), Full text; Figs. 1 to 4, 8, 9 (Family: none)	1-11

国際調査報告

国際出願番号　ＰＣＴ／ＪＰ２００６／３１４３９０

Ａ．　発明の属する分野の分類（国際特許分類（ＩＰＣ））

Int.Cl.　B61B10/02(2006.01)i, B61B13/12(2006.01)i, B61J1/10(2006.01)i, B65G17/20(2006.01)i

Ｂ．　調査を行った分野

調査を行った最小限資料（国際特許分類（ＩＰＣ））

Int.Cl.　B61B10/00-04, B61B13/12, B61J1/10, B65G17/20, B65G35/00-08, B65G37/00

最小限資料以外の資料で調査を行った分野に含まれるもの

日本国実用新案公報	１９２２－１９９６年
日本国公開実用新案公報	１９７１－２００６年
日本国実用新案登録公報	１９９６－２００６年
日本国登録実用新案公報	１９９４－２００６年

国際調査で使用した電子データベース（データベースの名称、調査に使用した用語）

Ｃ．　関連すると認められる文献

引用文献のカテゴリー＊	引用文献名　及び一部の箇所が関連するときは、その関連する箇所の表示	関連する請求の範囲の番号
A	JP 6-115426 A（株式会社ダイフク）１９９４．０４．２６，段落【００２６】－【００４１】，図１－７　（ファミリーなし）	１－１１
A	JP 8-282836 A（株式会社ダイフク）１９９６．１０．２９，全文，全図　（ファミリーなし）	１－１１
A	JP 2002-87346 A（本田技研工業株式会社）２００２．０３．２７，全文，図１－３，５－７ & US 6695126 B2 & GB 2373766 A & WO 2002/022433 A1 & CA 2390936 A1 & CN 1206125 C	１－１１

☑　Ｃ欄の続きにも文献が列挙されている。　☐　パテントファミリーに関する別紙を参照。

＊　引用文献のカテゴリー
「Ａ」特に関連のある文献ではなく、一般的技術水準を示すもの
「Ｅ」国際出願日前の出願または特許であるが、国際出願日以後に公表されたもの
「Ｌ」優先権主張に疑義を提起する文献又は他の文献の発行日若しくは他の特別な理由を確立するために引用する文献（理由を付す）
「Ｏ」口頭による開示、使用、展示等に言及する文献
「Ｐ」国際出願日前で、かつ優先権の主張の基礎となる出願の日の後に公表された文献
「Ｔ」国際出願日又は優先日後に公表された文献であって出願と矛盾するものではなく、発明の原理又は理論の理解のために引用するもの
「Ｘ」特に関連のある文献であって、当該文献のみで発明の新規性又は進歩性がないと考えられるもの
「Ｙ」特に関連のある文献であって、当該文献と他の１以上の文献との、当業者にとって自明である組合せによって進歩性がないと考えられるもの
「&」同一パテントファミリー文献

国際調査を完了した日	国際調査報告の発送日
１７．１０．２００６	３１．１０．２００６

国際調査機関の名称及びあて先	特許庁審査官（権限のある職員）	３Ｄ	３４２０
日本国特許庁（ＩＳＡ／ＪＰ） 郵便番号１００－８９１５ 東京都千代田区霞が関三丁目４番３号	落合　弘之 電話番号　０３－３５８１－１１０１　内線　３３４１		

Ｃ（続き）．　関連すると認められる文献

引用文献のカテゴリー＊	引用文献名　及び一部の箇所が関連するときは、その関連する箇所の表示	関連する請求の範囲の番号
A	JP 2002-19946 A（本田技研工業株式会社）２００２．０１．２３，全文，図１－４，８，９　（ファミリーなし）	１－１１

UNITED STATES PATENT AND TRADEMARK OFFICE

Commissioner for Patents
United States Patent and Trademark Office
P.O. Box 1450
Alexandria, VA 22313-1450
www.uspto.gov

MAILED

JUN 08 2011

OFFICE OF PETITIONS

JAMES DAVID JOHNSON, P.A.
401 EAST LAS OLAS BOULEVARD
SUITE 130-290
FORT LAUDERDALE, FL 33301

In re Application of	:	
Anna Marie Gyaraki	:	DECISION ON PETITION
Application No. 11/782,396	:	TO WITHDRAW
Filed: July 24, 2007	:	FROM RECORD
Attorney Docket No. 56449-0003	:	

This is a decision on the Request to Withdraw as attorney or agent of record under 37 C.F.R. § 1.36(b), filed April 20, 2011.

The request is **APPROVED**.

A grantable request to withdraw as attorney/agent of record must be signed by every attorney/agent seeking to withdraw or contain a clear indication that one attorney is signing on behalf of another/others. The Office will require the practitioner(s) to certify that he, she or they have: (1) given reasonable notice to the client, prior to the expiration of the reply period, which the practitioner(s) intends to withdraw from employment; (2) delivered to the client or a duly authorized representative of the client all papers and property (including funds) to which the client is entitled; and (3) notified the client of any replies that may be due and the time frame within which the client must respond, pursuant to 37 CFR 10.40 (c).

The request was signed by James David Johnson on behalf of all the practitioners of record associated with Customer Number 43463.

Customer Number 43463 has been withdrawn as attorney from record. Applicant is reminded that there is no attorney of record at this time.

The correspondence address of record has been changed and the new correspondence address is the address indicated below.

There is an outstanding Office action mailed January 25, 2011, that requires a reply.

Telephone inquires concerning this decision should be directed to the undersigned at (571) 272-6059. All other inquires concerning either the examination or status of the application should be directed to the Technology Center.

A. Kelley-Collier

Alicia Kelley-Collier
Petitions Examiner
Office of Petitions

cc: ANNA MARIE GYARAKI
401 EAST LAS OLAS BOULEVARD, SUIT 130-290
FORT LAUDERDALE, FL 33301

UNITED STATES PATENT AND TRADEMARK OFFICE

UNITED STATES DEPARTMENT OF COMMERCE
United States Patent and Trademark Office
Address: COMMISSIONER FOR PATENTS
P.O. Box 1450
Alexandria, Virginia 22313-1450
www.uspto.gov

APPLICATION NUMBER	FILING OR 371(C) DATE	FIRST NAMED APPLICANT	ATTY. DOCKET NO./TITLE
11/782,396	07/24/2007	Anna Marie Gyaraki	56449-0003

CONFIRMATION NO. 7511

POWER OF ATTORNEY NOTICE

43463
James David Johnson, P.A.
401 East Las Olas Boulevard
Suite 130-290
Fort Lauderdale, FL 33301

OC000000048082640

Date Mailed: 06/07/2011

NOTICE REGARDING CHANGE OF POWER OF ATTORNEY

This is in response to the Power of Attorney filed 04/20/2011.

- The withdrawal as attorney in this application has been accepted. Future correspondence will be mailed to the new address of record. 37 CFR 1.33.

/atkelley-collier/

Office of Data Management, Application Assistance Unit (571) 272-4000, or (571) 272-4200, or 1-888-786-0101

UNITED STATES PATENT AND TRADEMARK OFFICE

Commissioner for Patents
United States Patent and Trademark Office
P.O. Box 1450
Alexandria, VA 22313-1450
www.uspto.gov

PEDERSEN & COMPANY, PLLC
P.O. BOX 2666
BOISE ID 83701

MAILED

SEP 03 2010

OFFICE OF PETITIONS

In re Application of :
Martin Smith et al. :
Application No. 11/782,482 :
Filed: July 24, 2007 :
Attorney Docket No. 4419 :

ON PETITION

This is a decision on the renewed petition under the unintentional provisions of 37 CFR 1.137(b), filed August 6, 2010, to revive the above-identified application.

The petition is **GRANTED**.

The application became abandoned for failure to reply in a timely manner to the final Office action mailed, July 30, 2009, which set a shortened statutory period for reply of three (3) months. No extensions of time under the provisions of 37 CFR 1.136(a) were obtained. Accordingly, the application became abandoned on October 31, 2009. A Notice of Abandonment was mailed on February 17, 2010.

The petition satisfies the requirements of 37 CFR 1.137(b) in that petitioner has supplied (1) the reply in the form of a RCE (Request for Continued Examination, with the required fee of $405, (2) the petition fee of $810, and (3) a proper statement of unintentional delay. Accordingly, the RCE is accepted as being unintentionally delayed.

The application file does not indicate a change of address has been filed in this case, although the address given on the petition differs from the address of record. A change of address should be filed in this case in accordance with MPEP 601.03. A courtesy copy of this decision is being mailed to the address noted on the petition. However, until otherwise instructed, all future correspondence regarding this application will be mailed solely to the address of record.

Telephone inquiries concerning this decision should be directed to Kimberly Inabinet at (571) 272-4618.

This application is being referred to Technology Center AU 3673 for appropriate action by the Examiner in the normal course of business on the RCE received April 13, 2010.

/Kimberly Inabinet/

Kimberly Inabinet
Petitions Examiner
Office of Petitions

cc: Martin Smith
6 Trent Close
Burntwood, Staffordshire
England W27 9JH

cc: Craig John Barnett
8 Stafford Avenue
Worcestershire, England WR4 OTA

UNITED STATES PATENT AND TRADEMARK OFFICE

Commissioner for Patents
United States Patent and Trademark Office
P.O. Box 1450
Alexandria, VA 22313-1450
www.uspto.gov

3-5-2012

Patent No : 7,690,706 B2
Ser. No. : 11/782,500
Inventor(s) : Hans-Peter Wild, et. al.
Issued : April 6, 2010

Re: Request for Certificate of Correction

Consideration has been given your request for the issuance of a certificate of correction for the above-identified patent under the provisions of Rule(s) 1.322.

Assignees' names and addresses (assignment data) printed in a patent, are based *solely* on information supplied in the appropriate space for identifying the assignment data, i.e., item 3 of the Issue Fee Transmittal Form PTOL-85B. Granting of a request under 37 CFR 3.81(b) is required to correct applicant's error providing ***incorrect or erroneous*** assignment data, *before* issuance of a Certificate of Correction, under 37 CFR 1.323 *(see Manual of Patent Examining Procedures (M.P.E.P) Chp.1400, sect. 1481).* This procedure is required *at any time after the issue fee is paid,* including after issuance of the patent.

In view of the foregoing, your request is hereby denied.

A request to correct the Assignee under 37 CFR 3.81(b) should include:

A. **the processing fee set forth in 37 CFR 1.17(i) (currently $130);**
B. a statement that the failure to include the correct assignee name on the PTOL-85B was inadvertent; and
C. a copy of the Notice of Recordation of Assignment Document, reflecting the reel and frame number where the assignment(s) is recorded and/or reflecting proof of *the date* the assignment was submitted for recordation.

In the Request, Applicant(s) may request that the file be forwarded to Certificates of Correction Branch, for issuance of a Certificate of Correction, if the Request is granted.

Any request under 37 CFR 3.81(b) should be directed to the following address or facsimile number:

By mail: Mail Stop PETITIONS
Commissioner for Patents
Post Office Box 1450
Alexandria, VA 22313-1450

By hand: Customer Service Window
Mail Stop Petitions
Randolph Building
401 Dulany Street
Alexandria, VA 22314

By fax: (703) 872-9306
ATTN: Office of Petitions

If a fee (currently $100) was previously submitted for consideration of a Request for Certificate of Correction, under CFR 1.323, to correct assignment data, , no additional fee is required.

Eva James
For Mary Diggs
Decisions & Certificates
of Correction Branch
(571) 272-3422 or 703- 756 -1580

Steven B. Pokotilow
Stroock & Stroock &Lavan LLP
180 Maiden Lane
New York, NY 10038

ej

Doc Code: PET.AUTO Document Description: Petition automatically granted by EFS-Web	PTO/SB/64 U.S. Patent and Trademark Office Department of Commerce

Electronic Petition Request	PETITION FOR REVIVAL OF AN APPLICATION FOR PATENT ABANDONED UNINTENTIONALLY UNDER 37 CFR 1.137(b)
Application Number	11782567
Filing Date	24-Jul-2007
First Named Inventor	Chirine Zahar
Art Unit	3636
Examiner Name	RODNEY WHITE
Attorney Docket Number	011.P001
Title	AUTOMOTIVE VEHICLE SAFETY SEAT

The above-identified application became abandoned for failure to file a timely and proper reply to a notice or action by the United States Patent and Trademark Office. The date of abandonment is the day after the expiration date of the period set for reply in the office notice or action plus any extensions of time actually obtained.

APPLICANT HEREBY PETITIONS FOR REVIVAL OF THIS APPLICATION

NOTE: A grantable petition requires the following items:
(1) Petition fee;
(2) Reply and/or issue fee;
(3) Terminal disclaimer with disclaimer fee – required for all utility and plant applications filed before June 8, 1995; and for all design applications;
(4) Statement that the entire delay was unintentional.

Petition fee
The petition fee under 37CFR 1.17(m) is attached.

☐ Applicant claims SMALL ENTITY status. See 37 CFR 1.27.

☐ Applicant is no longer claiming SMALL ENTITY status. See 37 CFR 1.27(g)(2).

☒ Applicant(s) status remains as SMALL ENTITY.

☐ Applicant(s) status remains as other than SMALL ENTITY.

Issue Fee and Publication Fee :

Issue Fee and Publication Fee must accompany ePetition.

☒ Issue Fee Transmittal is attached

Drawing corrections and/ or other deficiencies.

○ Drawing corrections and/ or other deficiencies are not required

○ I certify, in accordance with 37 CFR 1.4.(D)(4), that drawing corrections and/ or other deficiencies have previously been filed on

◉ Drawing corrections and/ or other deficiencies are attached.

☒ STATEMENT: The entire delay in filing the required reply from the due date for the required reply until the filing of a grantable petition under 37 CFR 1.137(b) was unintentional.

THIS PORTION MUST BE COMPLETED BY THE SIGNATORY OR SIGNATORIES

I certify, in accordance with 37 CFR 1.4(d)(4) that I am:

◉ An attorney or agent registered to practice before the Patent and Trademark Office who has been given power of attorney in this application.

○ An attorney or agent registered to practice before the Patent and Trademark Office, acting in a representative capacity.

○ A sole inventor

○ A joint inventor; I certify that I am authorized to sign this submission on behalf of all of the inventors.

○ A joint inventor; all of whom are signing this e-petition.

○ The assignee of record of the entire interest that has properly made itself of record pursuant to 37 CFR 3.71.

Signature	/Blayne D. Green/
Name	Blayne D. Green
Registration Number	56198

UNITED STATES PATENT AND TRADEMARK OFFICE

Commissioner for Patents
United States Patent and Trademark Office
P.O. Box 1450
Alexandria, VA 22313-1450
www.uspto.gov

Decision Date : June 13,2011

In re Application of :

Chirine Zahar

Application No : 11782567

Filed : 24-Jul-2007

Attorney Docket No : 011.P001

DECISION ON PETITION

UNDER CFR 1.137(b)

This is an electronic decision on the petition under 37 CFR 1.137(b), filed June 13,2011 , to revive the above-identified application.

The petition is **GRANTED.**

The above-identified application became abandoned for failure to reply in a timely manner to the Notice of Allowance and Issue Fee(s) Due. The date of abandonment is the day after the expiration date of the period set for reply in the Notice.

The electronic petition satisfies the conditions for revival pursuant to the provisions of 37 CFR 1.137(b) in that (1) the reply in the form of payment of the Issue Fee and the Publication Fee (if necessary); (2) the petition fee as set forth in 37 CFR 1.17 (m); (3) the drawing correction and/or other deficiencies (if necessary); and (4) the required statement of unintentional delay have been received. Accordingly, the Issue Fee payment is accepted as having been unintentionally delayed.

Telephone inquiries concerning this decision should be directed to the Patent Electronic Business Center (EBC) at 866-217-9197.

This application file is being directed to the Office of Data Management.

Office of Petitions

UNITED STATES PATENT AND TRADEMARK OFFICE

Commissioner for Patents
United States Patent and Trademark Office
P.O. Box 1450
Alexandria, VA 22313-1450
www.uspto.gov

LEE & HAYES, PLLC
601 W. RIVERSIDE AVENUE
SUITE 1400
SPOKANE, WA 99201

MAILED
OCT 27 2011
OFFICE OF PETITIONS

In re Application of :
Chad Desjardins, et al. :
Application No.: 11/782,633 :
Filed: July 24, 2007 :
Attorney Docket No.: AM2-0110US :

ON PETITION

This is a decision on the petition, filed October 26, 2011, under 37 CFR 1.313(c)(2) to withdraw the above-identified application from issue after payment of the issue fee.

The petition is **GRANTED**.

The above-identified application is withdrawn from issue for consideration of a submission under 37 CFR 1.114 (request for continued examination). See 37 CFR 1.313(c)(2).

Petitioner is advised that the issue fee paid on September 22, 2011, cannot be refunded. If, however, this application is again allowed, petitioner may request that it be applied towards the issue fee required by the new Notice of Allowance.[1]

Telephone inquiries relating to this decision should be directed to the undersigned at (571) 272-3204.

The application is being referred to Technology Center AU 3625 for further processing of the request for continued examination under 37 CFR 1.114.

/SDB/

Sherry D. Brinkley
Petitions Examiner
Office of Petitions

[1] *The request to apply the issue fee to the new Notice may be satisfied by completing and returning the new Part B – Fee(s) Transmittal Form (along with any balance due at the time of submission). Petitioner is advised that the Issue Fee Transmittal Form* ***must*** *be completed and timely submitted to avoid abandonment of the application.*

UNITED STATES PATENT AND TRADEMARK OFFICE

Commissioner for Patents
United States Patent and Trademark Office
P.O. Box 1450
Alexandria, VA 22313-1450
www.uspto.gov

CALFEE HALTER & GRISWOLD, LLP
800 SUPERIOR AVENUE
SUITE 1400
CLEVELAND, OH 44114

MAILED

JAN 20 2011

OFFICE OF PETITIONS

e
In re Application of :
Andreas Schneider, et. al. :
Application No. 11/782,692 :
Filed: July 25, 2007 :
Attorney Docket No. 25460/04153 :

NOTICE

This is a Notice regarding your request for acceptance of a fee deficiency submission under 37 CFR 1.28, filed on November 15, 2010.

The Office no longer investigates or rejects original or reissue applications under 37 CFR 1.56. 1098 Off. Gaz. Pat. Office 502 (January 3, 1989). Therefore, nothing in this Notice is intended to imply that an investigation was done.

Your fee deficiency submission under 37 CFR 1.28 is hereby **ACCEPTED**. Therefore, status as a small entity has been removed and any future fee(s) submitted must be paid at the large entity rate.

Inquiries related to this communication should be directed to the undersigned at (571) 272-3226.

Andrea Smith
Petitions Examiner
Office of Petitions

SPE RESPONSE FOR CERTIFICATE OF CORRECTION

DATE : October 27, 2010

TO SPE OF : ART UNIT 1624
SUBJECT : Request for Certificate of Correction for Appl. No/11/782704 -7671062

Please respond to this request for a certificate of correction within 7 days.

FOR IFW FILES:

Please review the requested changes/corrections as shown in the **COCIN** document(s) in the IFW application image. No new matter should be introduced, nor should the scope or meaning of the claims be changed.

Please complete the response (see below) and forward the completed response to scanning using document code **COCX**.

FOR PAPER FILES:

Please review the requested changes/corrections as shown in the attached certificate of correction. Please complete this form (see below) and forward it with the file to:

Certificates of Correction Branch (CofC)
Randolph Square – 9D10-A
Palm Location 7580

Magdalene Talley

Certificates of Correction Branch

571-272-0423 _____

Thank You For Your Assistance

The request for issuing the above-identified correction(s) is hereby:
Note your decision on the appropriate box.

Approved	**All** changes apply.
☐ **Approved in Part**	Specify below which changes **do not** apply.
☐ **Denied**	State the reasons for denial below.

Comments: _____

1624

SPE **Art Unit**

UNITED STATES PATENT AND TRADEMARK OFFICE

Commissioner for Patents
United States Patent and Trademark Office
P.O. Box 1450
Alexandria, VA 22313-1450
www.uspto.gov

MOTOROLA MOBILITY, INC
600 NORTH US HIGHWAY 45
W2-55BB
LIBERTYVILLE IL 60048-5343

MAILED
MAY 09 2011
OFFICE OF PETITIONS

In re Application of :
Eric Sprunk :
Application No. 11/782,721 : ON PETITION
Filed: July 25, 2007 :
Attorney Docket No. **BCS04514** :

This is a decision on the petition under the unintentional provisions of 37 CFR 1.137(b), filed March 29, 2011, to revive the above-identified application.

The application became abandoned for failure to reply in a timely manner to the non-final Office action mailed September 20, 2010, which set a shortened statutory period for reply of three (3) months. No extensions of time under the provisions of 37 CFR 1.136(a) were obtained. Accordingly, the application became abandoned on December 21, 2010.

The petition satisfies the requirements of 37 CFR 1.137(b) in that petitioner has supplied (1) the reply in the form of an amendment; (2) the petition fee of $1,620; and (3) a proper statement of unintentional delay.

The petition is hereby **GRANTED**.

The application file does not indicate a change of address has been filed in this case, although the address given on the petition differs from the address of record. A change of address should be filed in this case in accordance with MPEP 601.03. A courtesy copy of this decision is being mailed to the address noted on the petition. However, until otherwise instructed, all future correspondence regarding this application will be mailed solely to the address of record.

Telephone inquiries concerning this decision should be directed to JoAnne Burke at (571)272-4584.

This application is being referred to Technology Center AU 2431for appropriate action by the Examiner in the normal course of business on the reply received.

JoAnne Burke
Petitions Examiner
Office of Petitions

cc: Stewart M. Wiener
101 Tournament Dr.
Horsham, PA 19044

UNITED STATES PATENT AND TRADEMARK OFFICE

UNITED STATES DEPARTMENT OF COMMERCE
United States Patent and Trademark Office
Address: COMMISSIONER FOR PATENTS
P.O. Box 1450
Alexandria, Virginia 22313-1450
www.uspto.gov

APPLICATION NO.	FILING DATE	FIRST NAMED INVENTOR	ATTORNEY DOCKET NO.	CONFIRMATION NO.
11/782,870	07/25/2007	Chung-Li Shen	JCLA22147	8325

EXAMINER
BANKS HAROLD, MARSHA DENISE

ART UNIT	PAPER NUMBER
2482	

MAIL DATE	DELIVERY MODE
02/18/2011	PAPER

7590 02/18/2011

J C PATENTS
4 VENTURE, SUITE 250
IRVINE, CA 92618

DECISION GRANTING PETITION UNDER 37 CFR 1.138(d)

The declaration of express abandonment is recognized

This is in response to the petition under 37 CFR 1.138(d), requesting for a refund of any previously paid search fee and excess claims fee in the above-identified application.

The petition is granted.

The express abandonment is recognized. Any previously paid search fee and excess claims fee are hereby refunded.

Telephone inquiries should be directed to the Office of Data Management at (571) 272-4200.

Patent Publication Branch
Office of Data Management

FORM PET651G (Rev. 08/07)

UNITED STATES PATENT AND TRADEMARK OFFICE

Commissioner for Patents
United States Patent and Trademark Office
P.O. Box 1450
Alexandria, VA 22313-1450
www.uspto.gov

FINNEGAN, HENDERSON, FARABOW, GARRETT & DUNNER LLP
901 NEW YORK AVENUE, NW
WASHINGTON DC 20001-4413

MAILED

DEC 13 2010

OFFICE OF PETITIONS

In re Application of	:	
Toru Nishi, et al.	:	
Application No. 11/782,880	:	DECISION GRANTING PETITION
Filed: July 25, 2007	:	UNDER 37 CFR 1.313(c)(2)
Attorney Docket No. 09812.1030	:	

This is a decision on the petition under 37 CFR 1.313(c)(2), filed, December 10, 2010 to withdraw the above-identified application from issue after payment of the issue fee.

The petition is **GRANTED**.

The above-identified application is withdrawn from issue for consideration of a submission under 37 CFR 1.114 (request for continued examination). *See* 37 CFR 1.313(c)(2).

Petitioner is advised that the issue fee paid on June 29, 2009 cannot be refunded. If, however, this application is again allowed, petitioner may request that it be applied towards the issue fee required by the new Notice of Allowance.[1]

Telephone inquiries should be directed to Terri Johnson at (571) 272-2991.

This application is being referred to Technology Center AU 2622 for processing of the request for continued examination under 37 CFR 1.114 and for consideration of the concurrently filed information disclosure statement.

/Terri Johnson/
Terri Johnson
Petitions Examiner
Office of Petitions

[1] *The request to apply the issue fee to the new Notice may be satisfied by completing and returning the new Part B – Fee(s) Transmittal Form (along with any balance due at the time of submission). Petitioner is advised that the Issue Fee Transmittal Form* ***must*** *be completed and timely submitted to avoid abandonment of the application.*

UNITED STATES PATENT AND TRADEMARK OFFICE

COMMISSIONER FOR PATENTS
UNITED STATES PATENT AND TRADEMARK OFFICE
P.O. BOX 1450
ALEXANDRIA, VA 22313-1450
www.uspto.gov

Paper No.

LORD CORPORATION
PATENT & LEGAL SERVICES
111 LORD DRIVE
P.O. Box 8012
CARY NC 27512-8012

MAILED
JAN 26 2011
OFFICE OF PETITIONS

In re Application of :
Donald Russell : ON PETITION
Application No. 11/782,891 :
Filed: July 25, 2007 :
Atty Docket No. IR-3524 (MRW) :

This is in response to the PETITION FOR REVIVAL OF AN APPLICATION FOR PATENT ABANDONED UNINTENTIONALLY UNDER 37 CFR 1.137(b) filed December 17, 2010.

The petition is **GRANTED**.

The above-identified application became abandoned for failure to pay the Issue Fee and Publication Fee within three months of the mailing date, August 25, 2010, of the Notice of Allowance and Fee(s) Due. This Office action set a three-month nonextendable statutory period for reply. An authorization to charge the fee was filed on November 29, 2010. However, at presentation, the Deposit Account did not have sufficient funds to pay the required fees. A courtesy Notice of Abandonment was mailed on December 13, 2010.

The petition included the required reply[1] in the form of payment of the Issue Fee and Publication Fee; payment of the petition fee set forth in 37 CFR § 1.17(m); and the required statement of unintentional delay. No terminal disclaimer is required.

It is concluded that all requirements of 37 CFR 1.137(b) have been met.

[1] There was no distinct but concurrent requirement for new drawings.

The Office of Data Management has been advised of this decision. The application is, thereby, forwarded for processing into a patent.

Telephone inquiries related to this decision should be directed to the undersigned at (571) 272-3219.

Nancy Johnson
Senior Petitions Attorney
Office of Petitions

UNITED STATES PATENT AND TRADEMARK OFFICE

Commissioner for Patents
United States Patent and Trademark Office
P.O. Box 1450
Alexandria, VA 22313-1450
www.uspto.gov

SF BAY AREA PATENTS, LLC
ATTN: ANDREW V. SMITH, PH.D.
601 VAN NESS AVENUE, #901
SAN FRANCISCO CA 94102

MAILED
MAY 09 2011
OFFICE OF PETITIONS

In re Application of	:	
Shui T. LAI	:	
Application No. 11/782,912	:	DECISION ON PETITION
Filed: July 25, 2007	:	
Attorney Docket No. DL-06-10	:	

This is a decision on the petition under the unintentional provisions of 37 CFR 1.137(b), filed April 14, 2011, to revive the above-identified application.

The petition is **GRANTED**.

This application became abandoned for failure to timely pay the issue and publication fees on or before July 03, 2009, as required by the Notice of Allowance and Fee(s) Due, mailed April 03, 2009. Accordingly, the date of abandonment of this application is July 04, 2009.

The petition satisfies the requirements of 37 CFR 1.137(b) in that petitioner has supplied (1) the reply in the form of payment of the issue fee of $755.00 and the publication fee of $300.00, (2) the petition fee of $810.00; and (3) a proper statement of unintentional delay. Accordingly, the issue and publication fee payments are accepted as being unintentionally delayed.

Telephone inquiries concerning this decision should be directed to the undersigned at (571) 272-4231.

This application is being referred to the Office of Data Management for processing into a patent.

Michelle R. Eason
Paralegal Specialist
Office of Petitions

UNITED STATES PATENT AND TRADEMARK OFFICE

Commissioner for Patents
United States Patent and Trademark Office
P.O. Box 1450
Alexandria, VA 22313-1450
www.uspto.gov

OBLON, SPIVAK, MCCLELLAND,
MAIER & NEUSTADT, L.L.P.
1940 DUKE STREET
ALEXANDRIA VA 22314

MAILED
SEP 21 2010
OFFICE OF PETITIONS

In re Application of
Paul Charles Downey
Application No. 11/782,999
Filed: July 25, 2007
Attorney Docket No. 310998US

NOTICE

This is a notice regarding your request for acceptance of a fee deficiency submission under 37 CFR 1.28.

The Office no longer investigates or rejects original or reissue applications under 37 CFR 1.56. **1098 Off. Gaz. Pat. Office 502 (January 3, 1989)**. Therefore, nothing in this Notice is intended to imply that an investigation was done.

Your fee deficiency submission under 37 CFR 1.28 is hereby **ACCEPTED**.

This application is no longer entitled to small entity status. Accordingly, all future fees paid in this application must be paid at the large entity rate.

Inquiries related to this communication should be directed to the undersigned at (571) 272-3213.

Cheryl Gibson-Baylor
Petitions Examiner
Office of Petitions

UNITED STATES PATENT AND TRADEMARK OFFICE

UNITED STATES DEPARTMENT OF COMMERCE
United States Patent and Trademark Office
Address: COMMISSIONER FOR PATENTS
P.O. Box 1450
Alexandria, Virginia 22313-1450
www.uspto.gov

APPLICATION NO.	FILING DATE	FIRST NAMED INVENTOR	ATTORNEY DOCKET NO.	CONFIRMATION NO.
11/783,185	04/06/2007	Tsunenori Arai	306783US2CIP	4938

22850 7590 03/15/2011
OBLON, SPIVAK, MCCLELLAND MAIER & NEUSTADT, L.L.P.
1940 DUKE STREET
ALEXANDRIA, VA 22314

EXAMINER
LAYNO, CARL HERNANDZ

ART UNIT	PAPER NUMBER
3766	

NOTIFICATION DATE	DELIVERY MODE
03/15/2011	ELECTRONIC

Please find below and/or attached an Office communication concerning this application or proceeding.

The time period for reply, if any, is set in the attached communication.

Notice of the Office communication was sent electronically on above-indicated "Notification Date" to the following e-mail address(es):

patentdocket@oblon.com
oblonpat@oblon.com
jgardner@oblon.com

UNITED STATES DEPARTMENT OF COMMERCE
U.S. Patent and Trademark Office
Address : COMMISSIONER FOR PATENTS
P.O. Box 1450
Alexandria, Virginia 22313-1450

APPLICATION NO./ CONTROL NO.	FILING DATE	FIRST NAMED INVENTOR / PATENT IN REEXAMINATION	ATTORNEY DOCKET NO.
11783185	4/6/07	ARAI ET AL.	306783US2CIP

EXAMINER
CARL H.. LAYNO

ART UNIT	PAPER
3766	20110309

DATE MAILED:

OBLON, SPIVAK, MCCLELLAND MAIER & NEUSTADT, L.L.P.
1940 DUKE STREET
ALEXANDRIA, VA 22314

Please find below and/or attached an Office communication concerning this application or proceeding.

Commissioner for Patents

See attached decision regarding Applicant's Petition for Acceptance of Color Drawings under 37 CFR 1.84(a)(2).

/Carl H. Layno/
Supervisory Patent Examiner, Art Unit 3766

Petition for Acceptance of Color Drawings under 37 CFR 1.84(a)(2)

Decision

1. Applicant's petition for the acceptance of color drawings submitted on 6/19/2007 has been GRANTED. Applicant's submission of the proper petition fee, specification changes, and color drawings (in triplicate) have satisfied the necessary requirements under 37 CFR 1.84(a)(2). Therefore, the color drawings have been made part of the file.

/Carl H. Layno/

Supervisory Patent Examiner, Art Unit 3766

UNITED STATES PATENT AND TRADEMARK OFFICE

Commissioner for Patents
United States Patent and Trademark Office
P.O. Box 1450
Alexandria, VA 22313-1450
www.uspto.gov

MAILED
APR 11 2011
OFFICE OF PETITIONS

Wellesley Alexander Allen
1216 Avonlea Road
Cambridge ON N3H 4Z8
CANADA

In re Application of Allen :
Application No. 11/783,263 : Decision on Petition
Filing Date: April 6, 2007 :
Attorney Docket No. 2004/0256406 A1 :

This is a decision on the petition under 37 CFR 1.137(a), filed February 2, 2011, to revive the above-identified application.

The petition is **DISMISSED**.

Any request for reconsideration must be submitted within TWO (2) MONTHS from the mail date of this decision. Extensions of time under 37 CFR 1.136(a) are permitted. The reconsideration request should include a cover letter entitled "Renewed Petition under 37 CFR 1.137(a)."

The above-identified application became abandoned for failure to reply in a timely manner to the non-final Office action mailed March 19, 2010, which set a shortened statutory period for reply of three (3) months. An extension of time under the provisions of 37 CFR 1.136(a) was not obtained. Accordingly, the above-identified application became abandoned on Tuesday, June 22, 2010. A Notice of Abandonment was mailed on October 26, 2010.

The Office will not consider the merits of a petition under 37 CFR 1.137(a) absent payment of the required petition fee of $270. Petitioner has not submitted the petition fee. Therefore, the merits of the petition will not be considered and the petition is dismissed.

As a courtesy, the Office notes a petition under 37 CFR 1.137(a) must include the following items in addition to the petition fee in order to be grantable:

(1) A proper reply outstanding Office action or notice, unless previously filed, *and*
(2) A showing <u>to the satisfaction of the Director</u> that the <u>entire</u> delay in filing the required reply from the due date for the reply until the filing of a grantable petition pursuant to this paragraph was <u>unavoidable.</u>

Petitioner may wish to consider filing a petition under 37 CFR 1.137(b) instead of a renewed petition under 37 CFR 1.137(a). A grantable petition pursuant to 37 CFR 1.137(b) must be accompanied by the required reply to the outstanding Office action (the March 19, 2010 Office action), the required petition fee ($810 for a small entity), and a statement that the **entire** delay in filing the required reply from the due date for the reply until the filing of a grantable petition pursuant to 37 CFR 1.137(b) was unintentional. A petition under 37 CFR 1.137(b) does not need to establish the entire delay in filing the required reply from the due date for the reply until the filing of a grantable petition pursuant to this paragraph was unavoidable.

A copy of a blank petition under 37 CFR 1.137(b) form is enclosed for petitioner's convenience.

Further correspondence with respect to this matter may be submitted as follows:

By Internet: A request for reconsideration may be filed electronically using EFS Web.[1] Document Code "PET.OP" should be used if the request is filed electronically.

By mail: Mail Stop Petition
Commissioner for Patents
P.O. Box 1450
Alexandria, VA 22313-1450

By facsimile: (571) 273-8300
Attn: Office of Petitions

By hand: U.S. Patent and Trademark Office
Customer Service Window
Randolph Building
401 Dulany Street
Alexandria, VA 22314

Telephone inquiries regarding this communication should be directed to Petitions Attorney Steven Brantley at (571) 272-3203.

Charles Steven Brantley
Senior Petitions Attorney
Office of Petitions

Enclosures: PTO/SB/64 Form (Petition under 37 CFR 1.137(b) form)
Privacy Act Notice

[1] General Information concerning EFS Web can be found at http://www.uspto.gov/patents/process/file/efs/index.jsp.

UNITED STATES PATENT AND TRADEMARK OFFICE

Commissioner for Patents
United States Patent and Trademark Office
P.O. Box 1450
Alexandria, VA 22313-1450
www.uspto.gov

Wellesley Alexander Allen
1216 Avonlea Road
Cambridge ON N3H 4Z8
CANADA

MAILED

JUN 08 2011

OFFICE OF PETITIONS

In re Application of Allen :
Application No. 11/783,263 :
Filing Date: April 6, 2007 :
Attorney Docket No. 2004/0256406 A1 :

Decision on Petition

This is a decision on the "Renewed Petition under 37 CFR 1.137(a)" filed April 29, 2011, and supplemented on May 25, 2011.

The petition is **DISMISSED**.

Any request for reconsideration must be submitted within TWO (2) MONTHS from the mail date of this decision. Extensions of time under 37 CFR 1.136(a) are permitted. The reconsideration request should include a cover letter entitled "Renewed Petition under 37 CFR 1.137(a)."

The Office mailed a decision dismissing a prior petition under 37 CFR 1.137(a) on April 11, 2011. The decision stated,

> The Office will not consider the merits of a petition under 37 CFR 1.137(a) absent payment of the required petition fee of $270. Petitioner has not submitted the petition fee. Therefore, the merits of the petition will not be considered and the petition is dismissed.

The instant petition was filed April 29, 2011. The petition does not include the required $270 petition fee.

A letter filed by Petitioner on May 25, 2011, appears to indicate Petitioner may believe the $270 petition fee is unnecessary in view of the fact he has filed a petition to make special based on age. Petitioner should note the $270 fee for a petition under 37 CFR 1.137(a) is required even if a petition to make special is filed and granted.

Since the required $270 petition fee has not been paid, the merits of the petition to revive the application under 37 CFR 1.137(a) will not be considered.

Any request for reconsideration under 37 CFR 1.137(a) should include the required $270 fee. As previously stated in the April 11, 2011 decision, "Petitioner may wish to consider filing a petition under 37 CFR 1.137(b) instead of a renewed petition under 37 CFR 1.137(a)."

Further correspondence with respect to this matter may be submitted as follows:

By Internet: A request for reconsideration may be filed electronically using EFS Web.[1] Document Code "PET.OP" should be used if the request is filed electronically.

By mail: Mail Stop Petition
Commissioner for Patents
P.O. Box 1450
Alexandria, VA 22313-1450

By facsimile: (571) 273-8300
Attn: Office of Petitions

By hand: U.S. Patent and Trademark Office
Customer Service Window
Randolph Building
401 Dulany Street
Alexandria, VA 22314

Telephone inquiries regarding this communication should be directed to Petitions Attorney Steven Brantley at (571) 272-3203.

Charles Steven Brantley
Senior Petitions Attorney
Office of Petitions

[1] General Information concerning EFS Web can be found at http://www.uspto.gov/patents/process/file/efs/index.jsp.

UNITED STATES PATENT AND TRADEMARK OFFICE

Commissioner for Patents
United States Patent and Trademark Office
P.O. Box 1450
Alexandria, VA 22313-1450
www.uspto.gov

BACON & THOMAS, PLLC
625 SLATERS LANE
FOURTH FLOOR
ALEXANDRIA VA 22314-1176

MAILED
JUL 29 2011
OFFICE OF PETITIONS

In re Application of	:	
WU et al.	:	
Application No. 11/783,299	:	DECISION ON PETITION
Filed: April 9, 2007	:	UNDER 37 CFR 1.55(c)
Attorney Docket No. WUSH3023/REF	:	

This is a decision on the petition under 37 CFR 1.55(c), filed January 13, 2011, to accept an unintentionally delayed claim under 35 U.S.C. § 119(a)-(d) for benefit of priority to the filing date of foreign Taiwan Patent Application Serial No. 095124642, filed July 6, 2006.

The petition is **DISMISSED**.

This application was filed after November 29, 2000, and did not include a reference to the foreign application, for which benefit is now sought, within the later of four months from the actual filing date of the application or sixteen months from the filing date of the prior foreign application. Since the claim for priority is submitted after the period specified in 37 CFR 1.55(a)(1)(i), this is an appropriate petition under the provisions of 37 CFR 1.55(c).

A petition under 37 CFR 1.55(c) to accept an unintentionally delayed claim for priority requires:

(1) The nonprovisional application claiming the benefit of an earlier filing date must be filed on or after November 29, 2000;
(2) the claim submitted with the petition must identify the prior foreign application for which priority is claimed, as well as any foreign application for the same subject matter and having a filing date before that of the application for which priority is claimed, by the application number, country, and the filing date, **and be included either in an oath or declaration (37 CFR 1.63(c)(2)) or in an Application Data Sheet (37 CFR 1.76(b)(6))**;
(3) the surcharge as set forth in 37 CFR 1.17(t);

(4) a statement that the entire delay between the date the claim was due under 37 CFR 1.55(a)(1) and the date the claim was filed was unintentional (the Director may require additional information where there is a question whether the delay was unintentional); and

(5) the above-identified nonprovisional application must be filed within 12 months of the filing date of the foreign application.

The petition fails to comply with items (2) and (4) above. In regard to item (2), a review of the file record fails to disclose that the priority information was included in an oath or declaration or in an Application Data Sheet (ADS) in accordance with 37 CFR 1.76(b)(6). Unless provided in an ADS, 37 CFR 1.63(c)(2) requires that the oath or declaration must identify the foreign application for patent (or inventor's certificate) for which priority is claimed under 37 CFR 1.55, and any foreign application having a filing date before that of the application on which priority is claimed, by specifying the application number, country, day, month, and year of its filing. *Note* MPEP 201.14.

In regards to item (4), 37 CFR § 1.55(c) requires a statement that the entire delay between the date the claim was due under 37 CFR § 1.55(a)(1) and the date the claim was filed was unintentional. The statement appearing in the petition fails to explain why the delay was unintentional. The ADS submitted upon filing the application clearly indicates that foreign priority was not being claimed and the apparent decision to now claim foreign priority must be explained.

In view of the above, compliance with 37 CFR 1.63(c)(2) or 37 CFR 1.76(b)(6) must be satisfied if applicant desires to claim priority to the foreign application noted in the petition. Any future petition should include a cover letter and be entitled "Renewed Petition under 37 CFR 1.55(c)."

Further correspondence with respect to this matter should be addressed as follows:

By mail: Mail Stop PETITIONS
Commissioner for Patents
Post Office Box 1450
Alexandria, VA 22313-1450

By hand: Customer Service Window
Mail Stop Petitions
Randolph Building
401 Dulany Street
Alexandria, VA 22314

By fax: (571) 273-8300
ATTN: Office of Petitions

Any questions concerning this matter may be directed to Jose' G Dees at (571) 272-1569.

for David Bucci
Petitions Examiner
Office of Petitions

UNITED STATES PATENT AND TRADEMARK OFFICE

Commissioner for Patents
United States Patent and Trademark Office
P.O. Box 1450
Alexandria, VA 22313-1450
www.uspto.gov

ROSENBERG, KLEIN & LEE
3458 ELLICOTT CENTER DRIVE-SUITE 101
ELLICOTT CITY MD 21043

MAILED
MAY 20 2011
OFFICE OF PETITIONS

In re Application of	:	
Young Hee Yu	:	
Application No. 11/783310	:	ON PETITION
Filing Date: 04/09/2007	:	
Attorney Docket Number:	:	
MR3823-2	:	

This is a decision on the petition under the unintentional provisions of 37 CFR 1.137(b), filed March 30, 2011, to revive the above-identified application.

The petition is **GRANTED**.

The application became abandoned for failure to timely file a reply within the meaning of 37 CFR 1.113 to the final Office action of February 18, 2010. The proposed reply required for consideration of a petition to revive must be a Notice of Appeal (and appeal fee required by 37 CFR 41.20(b)(2), an amendment that *prima facie* places the application in condition for allowance, a Request for Continued Examination and submission (37 CFR 1.114), or the filing of a continuing application under 37 CFR 1.53(b). See MPEP 711.03(c)(III)(A)(2). Accordingly, the date of abandonment of this application is June 11, 2010[1].

The petition satisfies the requirements of 37 CFR 1.137(b) in that petitioner has supplied (1) the reply in the form of a Request for Continued Examination (RCE) and fee (and the submission required by 37 CFR 1.114 previoulsy filed on June 10, 2010); (2) the petition fee; and (3) a proper statement of unintentional delay.

Telephone inquiries regarding this decision should be directed to the undersigned at (571) 272-3232.

This application is being referred to Technology Center AU 1791 for processing of the RCE and for appropriate action on the amendment by the Examiner in the normal course of business.

/DLW/

Derek L. Woods
Attorney
Office of Petitions

[1] Applicant filed a reply to the Office action on June 10, 2010; however, the reply failed to place the application in condition for allowance.

UNITED STATES PATENT AND TRADEMARK OFFICE

Commissioner for Patents
United States Patent and Trademark Office
P.O. Box 1450
Alexandria, VA 22313-1450
www.uspto.gov

MARTIN D. MOYNIHAN d/b/a PRTSI, INC.
P.O. BOX 16446
ARLINGTON, VA 22215

MAILED

SEP 2 0 2010

OFFICE OF PETITIONS

In re Application of :
Oren Levy :
Application No. 11/783,366 : ON PETITION
Filed: April 9,2007 :
Attorney Docket No. 34890 :

This is a decision on the petition under 37 CFR 1.137(b), filed August 18, 2010, to revive the above-identified application.

The application became abandoned for failure to file a reply to the non-final Office action mailed on December 30, 2009.

It is not apparent whether the statement of unintentional delay was signed by a person who would have been in a position of knowing that the entire delay in filing the required reply from the due date for the reply until the filing of a grantable petition pursuant to 37 CFR 1.137(b) was unintentional. Nevertheless, in accordance with 37 CFR 10.18, the statement is accepted as constituting a certification of unintentional delay. However, in the event that petitioner has no knowledge that the delay was unintentional, petitioner must make such an inquiry to ascertain that, in fact, the delay was unintentional. If petitioner discovers that the delay was intentional, petitioner must so notify the Office.

The petition satisfies the requirements of 37 CFR 1.137(b) in that petitioner has supplied (1) the reply in the form of an amendment; (2) the petition fee of $810; and (3) a proper statement of unintentional delay. Therefore, the petition is **GRANTED**.

This application file is being referred to Technology Center Art Unit 2448 for review of the amendment filed with the present petition.

Telephone inquiries concerning this decision should be directed to the undersigned at (571) 272-3226.

Andrea Smith
Petitions Examiner
Office of Petitions

UNITED STATES PATENT AND TRADEMARK OFFICE

Commissioner for Patents
United States Patent and Trademark Office
P.O. Box 1450
Alexandria, VA 22313-1450
www.uspto.gov

Squire, Sanders & Dempsey (US) LLP
8000 TOWERS CRESCENT DRIVE
14TH FLOOR
VIENNA VA 22182-6212

MAILED

SEP 12 2011

OFFICE OF PETITIONS

In re Application of	:	
Phil Davies, et al.	:	
Application No. 11/783,537	:	DECISION GRANTING PETITION
Filed: April 10, 2007	:	UNDER 37 CFR 1.313(c)(2)
Attorney Docket No. 089229.00279	:	

This is a decision on the petition under 37 CFR 1.313(c)(2), filed, September 8, 2011 to withdraw the above-identified application from issue after payment of the issue fee.

The petition is **GRANTED**.

The above-identified application is withdrawn from issue for consideration of a submission under 37 CFR 1.114 (request for continued examination). *See* 37 CFR 1.313(c)(2).

Petitioner is advised that the issue fee paid on August 10, 2011 cannot be refunded. If, however, this application is again allowed, petitioner may request that it be applied towards the issue fee required by the new Notice of Allowance.[1]

Telephone inquiries should be directed to Terri Johnson at (571) 272-2991.

This application is being referred to Technology Center AU 2454 for processing of the request for continued examination under 37 CFR 1.114 and for consideration of the concurrently filed information disclosure statement.

/Terri Johnson/
Terri Johnson
Petitions Examiner
Office of Petitions

---

[1] *The request to apply the issue fee to the new Notice may be satisfied by completing and returning the new Part B – Fee(s) Transmittal Form (along with any balance due at the time of submission). Petitioner is advised that the Issue Fee Transmittal Form* ***must*** *be completed and timely submitted to avoid abandonment of the application.*

UNITED STATES PATENT AND TRADEMARK OFFICE

Commissioner for Patents
United States Patent and Trademark Office
P.O. Box 1450
Alexandria, VA 22313-1450
www.uspto.gov

SQUIRE SANDERS (US) KKO
8000 TOWERS CRESCENT DRIVE
14TH FLOOR
VIENNA VA 22182-6212

MAILED
FEB 10 2012
OFFICE OF PETITIONS

In re Application of
Phil Davies et al
Application No. 11/783,537
Filed: April 10, 2007
Attorney Docket No. 089229.00279

DECISION ON PETITION AND REQUEST FOR REFUND

This is a decision on the petition under the unintentional provisions of 37 CFR 1.137(b), filed January 20, 2012, to revive the above-identified application. This is also a decision on the request for refund filed January 20, 2012.

The petition is **GRANTED**.

The request for refund is **GRANTED**.

The application became abandoned for failure to pay the issue fee on or before December 23, 2011, as required in the Notice of Allowance and Fee(s) Due mailed September 23, 2011.

The petition satisfies the conditions for revival pursuant to the provisions of 37 CFR 1.137(b) in that (1) the reply in the form of the issue and publication fees; (2) the petition fee; and (3) the required statement of unintentional delay have been received. Accordingly, the reply to the Notice of Allowance mailed September 23, 2011, is accepted as having been unintentionally delayed.

As to the Request for Refund:

Applicant files the above request for refund and states that "An Issue Fee and Publication Fee of $1,810.00, were paid in the above-captioned patent application on August 11, 2011 by Credit Card and EFS submission. Prosecution was re-opened by the filing of A Petition to Withdraw Application from Issue on September 8, 2011. This Petition was granted and the application was withdrawn from issue on September 12, 2011. Subsequently, a new Notice of Allowance was mailed on September 23, 2011."

Applicant further states that "Accordingly, please apply Applicant's August 11, 2011 payment of **$1,810.00** to the current amount due, **$2,040.00**, for payment of the Issue Fee. In an abundance of caution, and due to constraints within the EFS system, applicants are hereby paying the issue and publication fee of $2,040.00, to ensure that the application is properly passed to issue. However, it is respectfully requested that the previous payment of $1,810.00 be applied to this amount and applicants therefore request a refund of the currently paid issue fee in the amount of $1,810.00. The $230.00 difference is due, and should be applied appropriately."

In view of the above, the request for refund is granted and the total of $1,810.00 is being credited to petitioner's credit card account as it is the method in which the fee was paid.

Telephone inquiries concerning this decision should be directed to the undersigned at (571) 272-3208.

This application is being referred to the Office of Data Management to be processed into a patent.

/KOC/
Karen Creasy
Petitions Examiner
Office of Petitions

UNITED STATES PATENT AND TRADEMARK OFFICE

Commissioner for Patents
United States Patent and Trademark Office
P.O. Box 1450
Alexandria, VA 22313-1450
www.uspto.gov

Decision Date : March 26, 2012

In re Application of :

Filip Perich

Application No : 11783563

Filed : 10-Apr-2007

Attorney Docket No : 027484-000910US

DECISION ON REQUEST TO WITHDRAW AS ATTORNEY/AGENTOF RECORD

This is an electronic decision on the Request to Withdraw as attorney or agent of record under 37 CFR § 1.36(b), filed March 26, 2012

The request is **APPROVED.**

The request was signed by Richard S. Meyer (registration no. 32541) on behalf of all attorneys/agents associated with Customer Number 20350 . All attorneys/agents associated with Cusotmer Number 20350 have been withdrawn.

Since there are no remaining attorneys of record, all future communications from the Office will be directed to the first named inventor or assignee that has properly made itself of record pursuant to 37 CFR 3.71, with correspondence address:

Name	Shared Spectrum Company
Name2	
Address 1	1595 Spring Hill Road, Suite 700
Address 2	
City	Vienna
State	VA
Postal Code	22182
Country	US

As a reminder, requester is required to inform the first named inventor or assignee that has properly made itself of record pursuant to 37 CFR 3.71 of the electronically processed petition.

Telephone inquiries concerning this decision should be directed to the Patent Electronic Business Center (EBC) at 866-217-9197.

Office of Petitions

Doc Code: PET.AUTO **Document Description: Petition automatically granted by EFS-Web**	PTO/SB/83 U.S. Patent and Trademark Office Department of Commerce

Electronic Petition Request	**REQUEST FOR WITHDRAWAL AS ATTORNEY OR AGENT AND CHANGE OF CORRESPONDENCE ADDRESS**
Application Number	11783563
Filing Date	10-Apr-2007
First Named Inventor	Filip Perich
Art Unit	2491
Examiner Name	ALEXANDER LAGOR
Attorney Docket Number	027484-000910US
Title	Method and device for policy-based control of radio

◉ Please withdraw me as attorney or agent for the above identified patent application and the practitioners of record associated with Customer Number: 20350

The reason(s) for this request are those described in 37 CFR:

10.40(b)(4)

Certifications

☒ I/We have given reasonable notice to the client, prior to the expiration of the response period, that the practitioner(s) intend to withdraw from employment

☒ I/We have delivered to the client or a duly authorized representative of the client all papers and property (including funds) to which the client is entitled

☒ I/We have notified the client of any responses that may be due and the time frame within which the client must respond

Change the correspondence address and direct all future correspondence to the first named inventor or assignee that has properly made itself of record pursuant to 37 CFR 3.71:

Name	Shared Spectrum Company
Address	1595 Spring Hill Road, Suite 700
City	Vienna
State	VA
Postal Code	22182
Country	US

I am authorized to sign on behalf of myself and all withdrawing practitioners.	
Signature	/Richard S. Meyer/
Name	Richard S. Meyer
Registration Number	32541

UNITED STATES PATENT AND TRADEMARK OFFICE

Commissioner for Patents
United States Patent and Trademark Office
P.O. Box 1450
Alexandria, VA 22313-1450
www.uspto.gov

Mann+Hummel GMBH
Department VR-P
Hindenburgstr. 45
Ludwigsburg 71638 DE GERMANY

MAILED
AUG 25 2011
OFFICE OF PETITIONS

In re Application of	:	
Stefan Becker et al.	:	
Application No. 11/783,593	:	DECISION ON PETITION
Filed: April 10, 2007	:	
Attorney Docket No. 2644/US	:	

This is a decision on the petition under the unintentional provisions of 37 CFR 1.137(b), filed August 12, 2011, to revive the above-identified application.

The petition is **GRANTED**.

This application became abandoned for failure to timely pay the issue and publication fees on or before August 5, 2011, as required by the Notice of Allowance and Fee(s) Due, mailed May 5, 2011. Accordingly, the date of abandonment of this application is August 6, 2011. A Notice of Abandonment was mailed on August 17, 2011.

The petition satisfies the requirements of 37 CFR 1.137(b) in that petitioner has supplied (1) the reply in the form of payment of the issue fee of $1,510 and the publication fee of $300, (2) the petition fee of $1,620, and (3) a proper statement of unintentional delay. Accordingly, the issue and publication fees are accepted as being unintentionally delayed.

The application file does not indicate a change of address has been filed in this case, although the address given on the petition differs from the address of record. A change of address should be filed in this case in accordance with MPEP 601.03. A courtesy copy of this decision is being mailed to the address noted on the petition. However, until otherwise instructed, all future correspondence regarding this application will be mailed solely to the address of record.

Telephone inquiries concerning this decision should be directed to Kimberly Inabinet at (571) 272-4618.

This application is being referred to the Office of Data Management for further processing into a patent.

/Kimberly A. Inabinet/

Kimberly A. Inabinet
Petitions Examiner
Office of Petitions

cc: James Hasselbeck
6468 Lake Road
Millington, MI 48746

UNITED STATES PATENT AND TRADEMARK OFFICE

Commissioner for Patents
United States Patent and Trademark Office
P.O. Box 1450
Alexandria, VA 22313-1450
www.uspto.gov

WENDEROTH, LIND & PONACK, LLP
1030 15TH STREET, NW
SUITE 400
WASHINGTON, DC 20005-1503

MAILED

OCT 05 2010

OFFICE OF PETITIONS

In re Application of	:	
Hideaki Tanaka, et al.	:	
Application No. 11/783,696	:	DECISION GRANTING PETITION
Filed: April 11, 2007	:	UNDER 37 CFR 1.313(c)(2)
Attorney Docket No. 2007_0548A	:	

This is a decision on the petition under 37 CFR 1.313(c)(2), filed October 4, 2010, to withdraw the above-identified application from issue after payment of the issue fee.

The petition is **GRANTED**.

The above-identified application is withdrawn from issue for consideration of a submission under 37 CFR 1.114 (request for continued examination). *See* 37 CFR 1.313(c)(2).

Petitioner is advised that the issue fee paid on September 13, 2010 cannot be refunded. If, however, this application is again allowed, petitioner may request that it be applied towards the issue fee required by the new Notice of Allowance.[1]

Telephone inquiries regarding this decision should be directed to undersigned at (571) 272-1642. All other inquiries concerning the examination or status of this application should be directed to the Technology Center.

This application is being referred to Technology Center AU 3656 for processing of the request for continued examination under 37 CFR 1.114 and for consideration of the concurrently filed information disclosure statement.

/AMW/
April M. Wise
Petitions Examiner
Office of Petitions

[1] *The request to apply the issue fee to the new Notice may be satisfied by completing and returning the new Part B – Fee(s) Transmittal Form (along with any balance due at the time of submission). Petitioner is advised that the Issue Fee Transmittal Form must be completed and timely submitted to avoid abandonment of the application.*

UNITED STATES PATENT AND TRADEMARK OFFICE

Commissioner for Patents
United States Patent and Trademark Office
P.O. Box 1450
Alexandria, VA 22313-1450
www.uspto.gov

BACON & THOMAS, PLLC
625 SLATERS LANE
FOURTH FLOOR
ALEXANDRIA VA 22314-1176

MAILED

DEC 20 2010

OFFICE OF PETITIONS

In re Application of	:	
Toshisuke Sakai, et al.	:	
Application No. 11/783,771	:	NOTICE
Filed: April 12, 2007	:	
Attorney Docket No. SAKA3017/JJC/TL	:	

This is a notice regarding your request for acceptance of a fee deficiency submission under 37 CFR 1.28.

The Office no longer investigates or rejects original or reissue applications under 37 CFR 1.56. **1098 Off. Gaz. Pat. Office 502 (January 3, 1989)**. Therefore, nothing in this Notice is intended to imply that an investigation was done.

Your fee deficiency submission under 37 CFR 1.28 is hereby **ACCEPTED**.

This application is no longer entitled to small entity status. Accordingly, all future fees paid in this application must be paid at the large entity rate.

Inquiries related to this communication should be directed to the undersigned at (571) 272-2991.

/Terri Johnson/
Terri Johnson
Petitions Examiner
Office of Petitions

UNITED STATES PATENT AND TRADEMARK OFFICE

UNITED STATES DEPARTMENT OF COMMERCE
United States Patent and Trademark Office
Address: COMMISSIONER FOR PATENTS
P.O. Box 1450
Alexandria, Virginia 22313-1450
www.uspto.gov

APPLICATION NO.	FILING DATE	FIRST NAMED INVENTOR	ATTORNEY DOCKET NO.	CONFIRMATION NO.
11/783,833	04/12/2007	Louis Omer Joseph Pepin	131524	9011

7590 11/16/2010
OLIFF & BERRIDGE, PLC.
P.O. BOX 320850
ALEXANDRIA, VA 22320-4850

EXAMINER
BAKER, CHARLOTTE M

ART UNIT	PAPER NUMBER
2625	

NOTIFICATION DATE	DELIVERY MODE
11/16/2010	ELECTRONIC

ACKNOWLEDGEMENT OF REQUEST

Notice of Allowance/Allowability Mailed

The request to print a color drawing reference as the first paragraph in the portion of the specification containing a brief description of the drawings as required by 37 CFR 1.84 and MPEP § 608.02 has been received by the United States Patent and Trademark Office and will be entered into the specification.

571-272-4200 or 1-888-786-0101
Application Assistance Unit
Office of Data Management

FORM PTOM327-5 (Rev. 02/08)

UNITED STATES PATENT AND TRADEMARK OFFICE

Commissioner for Patents
United States Patent and Trademark Office
P.O. Box 1450
Alexandria, VA 22313-1450
www.uspto.gov

November 15, 2010

OLIFF & BERRIDGE, PLC.
P.O. BOX 320850
ALEXANDRIA VA 22320-4850

In re Application of	:	
Louis Omer Joseph Pepin, et al	:	**DECISION ON PETITION**
Application No. 11783833	:	
Filed: 04/12/2007	:	***ACCEPTANCE OF COLOR***
Attorney Docket No. **131524**	:	***DRAWINGS***

This is a decision on the Petition to Accept Color Drawings under 37 C.F.R 1.84 (a) (2), received in the United States Patent and Trademark Office (USPTO) 04/12/2007.

The petition is **GRANTED**.

A grantable petition under 37 C.F.R. 1.84(a) (2) must be accompanied by the following.

1. The fee set forth under 37 C.F.R. 1.17(h),
2. Three (3) sets of the color drawings in question, or (1) set if filed via EFS, and
3. The specification contains appropriate language referring to the color drawings as the first paragraph in that portion of the specification relating to the brief description of the drawings.

The petition was accompanied by all of the required fees and drawings. The specification contains the appropriate language. Therefore, the petition is GRANTED.

Telephone inquires relating to this decision may be directed to the undersigned in the Office of Data Management at 571-272-4200.

/Laura Feldman/
Quality Control Specialist
Office of Data Management
Publications Branch

UNITED STATES PATENT AND TRADEMARK OFFICE

Commissioner for Patents
United States Patent and Trademark Office
P.O. Box 1450
Alexandria, VA 22313-1450
www.uspto.gov

MARTIN D. MOYNIHAN d/b/a PRTSI, INC.
P.O. BOX 16446
ARLINGTON VA 22215

MAILED

JAN 12 2012

OFFICE OF PETITIONS

In re Application of ENGELHARDT et al. Application No. 11/783,860 Filed: 04/12/2007 Attorney Docket No. 38147	: : : : :	DECISION ON PETITION

This is a decision on the petition under 37 CFR 1.182, filed January 2, 2012, to correct the name of the first named inventor from "LENNY ENGELHARDT" to – LEONARD ENGELHARDT – in the above-identified application.

The petition is **GRANTED**.

The Office records have been updated to reflect the correction of the inventor's name and a new bib-data sheet has been printed and scanned in the Image File Wrapper. A corrected Filing Receipt, which reflects the inventor's name change, accompanies this decision.

Any questions concerning this matter may be directed to undersigned at (571) 272-3211. Any questions concerning the examination procedures or status of the application should be directed to the Technology Center.

This matter is being referred to the Office of Patent Application Processing.

C. T. Donnell

Christina Tartera Donnell
Senior Petitions Attorney
Office of Petitions

UNITED STATES PATENT AND TRADEMARK OFFICE

UNITED STATES DEPARTMENT OF COMMERCE
United States Patent and Trademark Office
Address: COMMISSIONER FOR PATENTS
P.O. Box 1450
Alexandria, Virginia 22313-1450
www.uspto.gov

APPLICATION NUMBER	FILING or 371(c) DATE	GRP ART UNIT	FIL FEE REC'D	ATTY.DOCKET.NO	TOT CLAIMS	IND CLAIMS
11/783,860	04/12/2007	2629	1151	38147	45	2

CONFIRMATION NO. 9066

CORRECTED FILING RECEIPT

67801
MARTIN D. MOYNIHAN d/b/a PRTSI, INC.
P.O. BOX 16446
ARLINGTON, VA 22215

OC000000051876480

Date Mailed: 01/09/2012

Receipt is acknowledged of this non-provisional patent application. The application will be taken up for examination in due course. Applicant will be notified as to the results of the examination. Any correspondence concerning the application must include the following identification information: the U.S. APPLICATION NUMBER, FILING DATE, NAME OF APPLICANT, and TITLE OF INVENTION. Fees transmitted by check or draft are subject to collection. Please verify the accuracy of the data presented on this receipt. **If an error is noted on this Filing Receipt, please submit a written request for a Filing Receipt Correction. Please provide a copy of this Filing Receipt with the changes noted thereon. If you received a "Notice to File Missing Parts" for this application, please submit any corrections to this Filing Receipt with your reply to the Notice. When the USPTO processes the reply to the Notice, the USPTO will generate another Filing Receipt incorporating the requested corrections**

Applicant(s)

Leonard Engelhardt, Moshav Ora, ISRAEL;
Jonathan Moore, Tel-Aviv, ISRAEL;

Assignment For Published Patent Application

N-trig Ltd., Kfar-Saba, ISRAEL

Power of Attorney:
Martin Moynihan--40338

Domestic Priority data as claimed by applicant

This appln claims benefit of 60/791,205 04/12/2006

Foreign Applications (You may be eligible to benefit from the **Patent Prosecution Highway** program at the USPTO. Please see http://www.uspto.gov for more information.)

If Required, Foreign Filing License Granted: 05/10/2007

The country code and number of your priority application, to be used for filing abroad under the Paris Convention, is **US 11/783,860**

Projected Publication Date: Not Applicable

Non-Publication Request: No

Early Publication Request: No
**** SMALL ENTITY ****

Title

Gesture recognition feedback for a dual mode digitizer

Preliminary Class

345

PROTECTING YOUR INVENTION OUTSIDE THE UNITED STATES

Since the rights granted by a U.S. patent extend only throughout the territory of the United States and have no effect in a foreign country, an inventor who wishes patent protection in another country must apply for a patent in a specific country or in regional patent offices. Applicants may wish to consider the filing of an international application under the Patent Cooperation Treaty (PCT). An international (PCT) application generally has the same effect as a regular national patent application in each PCT-member country. The PCT process **simplifies** the filing of patent applications on the same invention in member countries, but **does not result** in a grant of "an international patent" and does not eliminate the need of applicants to file additional documents and fees in countries where patent protection is desired.

Almost every country has its own patent law, and a person desiring a patent in a particular country must make an application for patent in that country in accordance with its particular laws. Since the laws of many countries differ in various respects from the patent law of the United States, applicants are advised to seek guidance from specific foreign countries to ensure that patent rights are not lost prematurely.

Applicants also are advised that in the case of inventions made in the United States, the Director of the USPTO must issue a license before applicants can apply for a patent in a foreign country. The filing of a U.S. patent application serves as a request for a foreign filing license. The application's filing receipt contains further information and guidance as to the status of applicant's license for foreign filing.

Applicants may wish to consult the USPTO booklet, "General Information Concerning Patents" (specifically, the section entitled "Treaties and Foreign Patents") for more information on timeframes and deadlines for filing foreign patent applications. The guide is available either by contacting the USPTO Contact Center at 800-786-9199, or it can be viewed on the USPTO website at http://www.uspto.gov/web/offices/pac/doc/general/index.html.

For information on preventing theft of your intellectual property (patents, trademarks and copyrights), you may wish to consult the U.S. Government website, http://www.stopfakes.gov. Part of a Department of Commerce initiative, this website includes self-help "toolkits" giving innovators guidance on how to protect intellectual property in specific countries such as China, Korea and Mexico. For questions regarding patent enforcement issues, applicants may call the U.S. Government hotline at 1-866-999-HALT (1-866-999-4158).

LICENSE FOR FOREIGN FILING UNDER

Title 35, United States Code, Section 184

Title 37, Code of Federal Regulations, 5.11 & 5.15

GRANTED

The applicant has been granted a license under 35 U.S.C. 184, if the phrase "IF REQUIRED, FOREIGN FILING LICENSE GRANTED" followed by a date appears on this form. Such licenses are issued in all applications where the conditions for issuance of a license have been met, regardless of whether or not a license may be required as

set forth in 37 CFR 5.15. The scope and limitations of this license are set forth in 37 CFR 5.15(a) unless an earlier license has been issued under 37 CFR 5.15(b). The license is subject to revocation upon written notification. The date indicated is the effective date of the license, unless an earlier license of similar scope has been granted under 37 CFR 5.13 or 5.14.

This license is to be retained by the licensee and may be used at any time on or after the effective date thereof unless it is revoked. This license is automatically transferred to any related applications(s) filed under 37 CFR 1.53(d). This license is not retroactive.

The grant of a license does not in any way lessen the responsibility of a licensee for the security of the subject matter as imposed by any Government contract or the provisions of existing laws relating to espionage and the national security or the export of technical data. Licensees should apprise themselves of current regulations especially with respect to certain countries, of other agencies, particularly the Office of Defense Trade Controls, Department of State (with respect to Arms, Munitions and Implements of War (22 CFR 121-128)); the Bureau of Industry and Security, Department of Commerce (15 CFR parts 730-774); the Office of Foreign AssetsControl, Department of Treasury (31 CFR Parts 500+) and the Department of Energy.

NOT GRANTED

No license under 35 U.S.C. 184 has been granted at this time, if the phrase "IF REQUIRED, FOREIGN FILING LICENSE GRANTED" DOES NOT appear on this form. Applicant may still petition for a license under 37 CFR 5.12, if a license is desired before the expiration of 6 months from the filing date of the application. If 6 months has lapsed from the filing date of this application and the licensee has not received any indication of a secrecy order under 35 U.S.C. 181, the licensee may foreign file the application pursuant to 37 CFR 5.15(b).

SelectUSA

The United States represents the largest, most dynamic marketplace in the world and is an unparalleled location for business investment, innovation and commercialization of new technologies. The USA offers tremendous resources and advantages for those who invest and manufacture goods here. Through SelectUSA, our nation works to encourage, facilitate, and accelerate business investment. To learn more about why the USA is the best country in the world to develop technology, manufacture products, and grow your business, visit SelectUSA.gov.

UNITED STATES PATENT AND TRADEMARK OFFICE

Commissioner for Patents
United States Patent and Trademark Office
P.O. Box 1450
Alexandria, VA 22313-1450
www.uspto.gov

HOFFMANN & BARON, LLP
6900 JERICHO TURNPIKE
SYOSSET NY 11791

MAILED
MAY 20 2011
OFFICE OF PETITIONS

In re Application of :
Susan I. Shelso :
Application No. 11/784,022 :
Filed: April 4, 2007 :
Attorney Docket No. **792-96 CON** :

DECISION ON PETITION
TO WITHDRAW
FROM RECORD

This is a decision on the request to withdraw as attorney of record under 37 CFR § 1.36(b), filed May 10, 2011.

The request is **NOT APPROVED**.

The request cannot be approved because it lacks the name of the first inventor or the assignee of record that is associated with the address listed in the request. Therefore, the change of correspondence address is considered improper.

The Office will only accept correspondence address changes to the most current address information provided for the assignee of the entire interest *who properly became of record under 37 CFR 3.71,* or, if no assignee of the entire interest has properly been made of record, the most current address information provided for the first named inventor. 37 CFR 3.71(c) states:

> *An assignee becomes of record either in a national patent application or a reexamination proceeding by filing a statement in compliance with § 3.73(b) that is signed by a party who is authorized to act on behalf of the assignee.*

The assignee must establish its ownership of the patent to the satisfaction of the Director. In this regard, the statement under 37 CFR 3.73(b) must have either: (i) documentary evidence of a chain of title from the original owner to the assignee (*e.g.*, copy of an executed assignment), and a statement affirming that the documentary evidence of the chain of title from the original owner to the assignee was or concurrently is being submitted for recordation pursuant to § 3.11; or (ii) a statement specifying where documentary evidence of a chain of title from the original owner to the assignee is recorded in the assignment records of the Office (*e.g.*, reel and frame number).

All future communications from the Office will continue to be directed to the above-listed address until otherwise notified by applicant.

Telephone inquires concerning this decision should be directed to the undersigned at (571) 272-4584.

JoAnne Burke
Petitions Examiner
Office of Petitions

SPE RESPONSE FOR CERTIFICATE OF CORRECTION

Paper No.: _____

DATE : 02/07/11

TO SPE OF : ART UNIT 2889

SUBJECT : Request for Certificate of Correction for Appl. No.: 11784122 Patent No.: 7759859

CofC mailroom date: 01/18/11

Please respond to this request for a certificate of correction within 7 days.

FOR IFW FILES:

Please review the requested changes/corrections as shown in the **COCIN** document(s) in the IFW application image. No new matter should be introduced, nor should the scope or meaning of the claims be changed.

Please complete the response (see below) and forward the completed response to scanning using document code **COCX**.

FOR PAPER FILES:

Please review the requested changes/corrections as shown in the attached certificate of correction. Please complete this form (see below) and forward it with the file to:

Certificates of Correction Branch (CofC)
Randolph Square – 9D10-A
Palm Location 7580

You can fax the Directors SPE response to 571-270-9990

Certificates of Correction Branch

Lamonte Newsome

Certificates of Correction Branch

571-272-3421

Thank You For Your Assistance

The request for issuing the above-identified correction(s) is hereby:
Note your decision on the appropriate box.

ok Approved	**All** changes apply.
❑ **Approved in Part**	Specify below which changes **do not** apply.
❑ **Denied**	State the reasons for denial below.

Comments: _____

PTOL-306 (REV. 7/03) U.S. DEPARTMENT OF COMMERCE Patent and Trademark Office

SPE RESPONSE FOR CERTIFICATE OF CORRECTION

/Toan Ton/ SPE 2889

UNITED STATES PATENT AND TRADEMARK OFFICE

Commissioner for Patents
United States Patent and Trademark Office
P.O. Box 1450
Alexandria, VA 22313-1450
www.uspto.gov

GOODWIN PROCTER LLP
ATTN: PATENT ADMINISTRATOR
135 COMMONWEALTH DRIVE
MENLO PARK CA 94025-1105

MAILED
SEP 29 2011
OFFICE OF PETITIONS

In re Application of	:	
ABHYANKER	:	
Application No. 11/784,137	:	DECISION ON PETITION
Filed: April 4, 2007	:	TO WITHDRAW
Attorney Docket No. DMP 0015	:	FROM RECORD
	:	

This is a decision on the Request to Withdraw as attorney or agent of record under 37 C.F.R. § 1.36(b), filed September 16, 2011.

The request is **DISMISSED**.

The Request cannot be accepted because Petitioner has not complied with current USPTO requirements as set forth in 37 CFR 10.40. In this regard, the Office requires the practitioner(s) requesting withdrawal to certify that he, she or they have:

(1) given reasonable notice to the client, prior to the expiration of the response period, that practitioner(s) intends to withdraw from employment;

(2) delivered to the client or a duly authorized representative of the client all papers and property (including funds) to which the client is entitled; and

(3) notified the client of any responses that may be due and the time frame within which the client must respond, pursuant to 37 CFR 10.40(c).

Petitioner has not complied with items (1) and (3) of the above-identified certifications.

Further, the request to withdraw from record cannot be approved because the request to change the correspondence address is not acceptable. The Office will either change the correspondence address of record to the most current address information provided for the assignee of the entire interest who properly became of record under 37 CFR 3.71 or, if no assignee of the entire interest has properly been made of record under 37 CFR 3.71, the most current address information provided for the first named inventor. Any change of address to an attorney or firm must be accompanied by a proper power of attorney.

A review of the Office record does not indicate a power of attorney to the Customer Number indicated on the Request for Withdrawal as Attorney or Agent filed September 16, 2011. In this regard, absent a proper of attorney, the Request cannot be approved.

All future communications from the Office will continue to be directed to the above-identified address until otherwise properly notified.

Telephone inquiries concerning this decision should be directed to the undersigned at (571) 272-6735.

/Diane Goodwyn/
Diane Goodwyn
Petitions Examiner
Office of Petitions

UNITED STATES PATENT AND TRADEMARK OFFICE

Commissioner for Patents
United States Patent and Trademark Office
P.O. Box 1450
Alexandria, VA 22313-1450
www.uspto.gov

PENUMBRA INC. c/o MoFo
425 Market Street
San Francisco, CA 94105-2482

MAILED

SEP 17 2010

OFFICE OF PETITIONS

In re Application of
Arani Bose et al.
Application No. 11/784,236
Filed: April 6, 2007
Attorney Docket No. **028414-000510US**

DECISION ON PETITION TO WITHDRAW FROM RECORD

This is a decision on the Request to Withdraw as attorney or agent of record under 37 CFR. § 1.36(b), filed July 26, 2010.

The request is **NOT APPROVED** as moot.

A review of the file record indicates that the power of attorney to attorneys/agents associated with Customer Number 87935 has been revoked by the applicants of the patent application on July 29, 2010. Accordingly, the request to withdraw under 37 CFR § 1.36(b) is moot.

All future communications from the Office will continue to be directed to the below-listed address until otherwise notified by applicant.

Telephone inquires concerning this decision should be directed to the undersigned at 571-272-4584.

JoAnne Burke
Petitions Examiner
Office of Petitions

cc: TOWNSEND AND TOWNSEND AND CREW, LLP
TWO EMBARCADERO CENTER
EIGHTH FLOOR
SAN FRANCISCO CA 94111-3834

UNITED STATES PATENT AND TRADEMARK OFFICE

Commissioner for Patents
United States Patent and Trademark Office
P.O. Box 1450
Alexandria, VA 22313-1450
www.uspto.gov

January 27, 2012

BELL & ASSOCIATES
58 West Portal Avenue No. 121
SAN FRANCISCO CA 94127

In re Application of	:	
ZHANG, JIN Z .et al	:	**DECISION ON PETITION**
Application No. 11/784,297	:	
Filed: 04/05/2007	:	***ACCEPTANCE OF COLOR***
Attorney Docket No. UCSC1006-631 US	:	***DRAWINGS***

This is a decision on the Petition to Accept Color Drawings under 37 C.F.R 1.84 (a) (2), received in the United States Patent and Trademark Office (USPTO) April 05, 2007.

The petition is **GRANTED**.

A grantable petition under 37 C.F.R. 1.84(a) (2) must be accompanied by the following.

1. The fee set forth under 37 C.F.R. 1.17(h),
2. Three (3) sets of the color drawings in question, (One (1) set for EFW filings, and
3. The specification containing the following language as the first paragraph in that portion of the specification relating to the brief description of the drawings.

   "The file of this patent contains at least one drawing executed in color. Copies of this patent with color drawing(s) will be provided by the Patent and Trademark Office upon request and payment of the necessary fee."

The petition was accompanied by all of the requirements above. Therefore, the petition is GRANTED.

Telephone inquires relating to this decision may be directed to the undersigned in the Office of Data Management at 571-272-4200.

/Diane Terry/
Quality Control Specialist
Office of Data Management
Publications Branch

UNITED STATES PATENT AND TRADEMARK OFFICE

Commissioner for Patents
United States Patent and Trademark Office
P.O. Box 1450
Alexandria, VA 22313-1450
www.uspto.gov

LAW OFFICE OF ROBERT E. KASODY,
PROFESSIONAL CORPORATION
6601 CENTER DRIVE WEST, SUITE #500
LOS ANGELES CA 90045

MAILED

OCT 12 2010

OFFICE OF PETITIONS

In re Application of	:	
SCALISI, Joseph F.	:	
Application No. 11/784,318	:	DECISION ON PETITION
Filed: April 05, 2007	:	TO WITHDRAW
Attorney Docket No. **LBTECH.002DV2**	:	FROM RECORD
	:	

This is a decision on the Request to Withdraw as attorney or agent of record under 37 C.F.R. § 1.36(b), filed September 02, 2010.

The request is **APPROVED**.

A grantable request to withdraw as attorney/agent of record must be signed by every attorney/agent seeking to withdraw or contain a clear indication that one attorney is signing on behalf of another/others. The Office requires the practitioner(s) requesting withdrawal to certify that he, she, or they have: (1) given reasonable notice to the client, prior to the expiration of the response period, that the practitioner(s) intends to withdraw from employment; (2) delivered to the client or a duly authorized representative of the client all papers and property (including funds) to which the client is entitled; and (3) notified the client of any responses that may be due and the time frame within which the client must respond, pursuant 37 CFR 10.40(c).

The request was signed by Robert E. Kasody on behalf of all attorneys of record who are associated with customer No. 70515. All attorneys/agents associated have been withdrawn. Applicant is reminded that there is no attorney of record at this time.

All future correspondence will be directed to the first named inventor Joseph F. Scalisi at the address indicated below.

There is an outstanding Office action mailed May 17, 2010 that requires a reply from the applicant.

Telephone inquiries concerning this decision should be directed to Michelle R. Eason at 571-272-4231.

Michelle R. Eason
Paralegal Specialist
Office of Petitions

cc: **JOSEPH F. SCALISI**
38 DISCOVERY, SUITE 150
IRVINE, CA 92618

UNITED STATES PATENT AND TRADEMARK OFFICE

Commissioner for Patents
United States Patent and Trademark Office
P.O. Box 1450
Alexandria, VA 22313-1450
www.uspto.gov

ERIC J. WENGREEN
64 ABRAMS CT. #104
STANFORD, CA 94305

MAILED
FEB 14 2011
OFFICE OF PETITIONS

In re Application of
Joseph F. Scalisi, et. Al.
Application No. 11/784,318
Filed: April 5, 2007
Attorney Docket No. LBTECH.002DV3

ON PETITION

This is a decision on the petition under the unintentional provisions of 37 CFR 1.137(b), filed January 7, 20011, to revive the above-identified application.

The petition is **GRANTED**.

The application became abandoned for failure to timely file a reply within the meaning of 37 CFR 1.113 to the final Office action of June 7, 2010. The proposed reply required for consideration of a petition to revive must be a Notice of Appeal (and appeal fee required by 37 CFR 41.20(b)(2), an amendment that *prima facie* places the application in condition for allowance, a Request for Continued Examination and submission (37 CFR 1.114), or the filing of a continuing application under 37 CFR 1.53(b). See MPEP 711.03(c)(II)(A)(2). No extensions of time pursuant to the provisions of 37 CFR 1.136(a) were obtained. Accordingly, the date of abandonment of this application is September 8, 2010.

The petition satisfies the requirements of 37 CFR 1.137(b) in that petitioner has supplied (1) the reply in the form of a Request for Continued Examination (RCE) and fee of $405, and the submission required by 37 CFR 1.114; (2) the petition fee of $810; and (3) a proper statement of unintentional delay.

It is not apparent whether the statement of unintentional delay was signed by a person who would have been in a position of knowing that the entire delay in filing the required reply from the due date for the reply until the filing of a grantable petition pursuant to 37 CFR 1.137(b) was unintentional. Nevertheless, in accordance with 37 CFR 10.18, the statement is accepted as constituting a certification of unintentional delay. However, in the event that petitioner has no knowledge that the delay was unintentional, petitioner must make such an inquiry to ascertain that, in fact, the delay was unintentional. If petitioner discovers that the delay was intentional, petitioner must so notify the Office.

Telephone inquiries concerning this decision should be directed to the undersigned at (571) 272-1642. All other inquiries concerning the examination or status of this application should be directed to the Technology Center.

This application is being referred to Technology Center AU 2617 for processing of the RCE and for appropriate action by the Examiner in the normal course of business on the amendment submitted in accordance with 37 CFR 1.114.

April M. Wise
Petitions Examiner
Office of Petitions

UNITED STATES PATENT AND TRADEMARK OFFICE

Commissioner for Patents
United States Patent and Trademark Office
P.O. Box 1450
Alexandria, VA 22313-1450
www.uspto.gov

SCULLY SCOTT MURPHY & PRESSER, PC
400 GARDEN CITY PLAZA
SUITE 300
GARDEN CITY, NY 11530

MAILED

OCT 06 2011

OFFICE OF PETITIONS

In re Application of	:	
Takayuki Tsuji, et al.	:	
Application No. 11/784,365	:	DECISION GRANTING PETITION
Filed: April 6, 2007	:	UNDER 37 CFR 1.313(c)(2)
Attorney Docket No. 21022	:	

This is a decision on the petition under 37 CFR 1.313(c)(2), filed October 5, 2011, to withdraw the above-identified application from issue after payment of the issue fee.

The petition is **GRANTED**.

The above-identified application is withdrawn from issue for consideration of a submission under 37 CFR 1.114 (request for continued examination). *See* 37 CFR 1.313(c)(2).

Petitioner is advised that the issue fee paid on September 8, 2011 cannot be refunded. If, however, this application is again allowed, petitioner may request that it be applied towards the issue fee required by the new Notice of Allowance.[1]

Telephone inquiries concerning this decision should be directed to undersigned at (571) 272-1642. All other inquiries concerning the examination or status of this application should be directed to the Technology Center.

This application is being referred to Technology Center AU 2811 for processing of the request for continued examination under 37 CFR 1.114 and for consideration of the concurrently filed information disclosure statement.

/AMW/
April M. Wise
Petitions Examiner
Office of Petitions

---

[1] *The request to apply the issue fee to the new Notice may be satisfied by completing and returning the new Part B – Fee(s) Transmittal Form (along with any balance due at the time of submission). Petitioner is advised that the Issue Fee Transmittal Form* ***must*** *be completed and timely submitted to avoid abandonment of the application.*

UNITED STATES PATENT AND TRADEMARK OFFICE

Commissioner for Patents
United States Patent and Trademark Office
P.O. Box 1450
Alexandria, VA 22313-1450
www.uspto.gov

HITACHI C/O WAGNER BLECHER LLP
123 WESTRIDGE DRIVE
WATSONVILLE CA 95076

MAILED
MAR 14 2011
OFFICE OF PETITIONS

In re Application of	:	
Takahisa OKADA et al.	:	
Application No. 11/784,374	:	DECISION ON PETITION
Filed: April 06, 2007	:	
Attorney Docket No. HJP920050237US1	:	

This is a decision on the petition under the unintentional provisions of 37 CFR 1.137(b), filed February 03, 2011, to revive the above-identified application.

The petition is **GRANTED**.

The application became abandoned for failure to reply in a timely manner to the non-final Office action mailed July 20, 2010, which set a shortened statutory period for reply of three (3) months. No extensions of time under the provisions of 37 CFR 1.136(a) were obtained. Accordingly, the application became abandoned on October 21, 2010.

The petition satisfies the requirements of 37 CFR 1.137(b) in that petitioner has supplied (1) the reply in the form of an amendment, (2) the petition fee of $1,620.00, and (3) a proper statement of unintentional delay. Accordingly, the reply to the non-final Office action of July 20, 2010 is accepted as having been unintentionally delayed.

Telephone inquiries concerning this decision should be directed to the undersigned at (571) 272-4231.

This application is being referred to Technology Center AU 2627 for appropriate action by the Examiner in the normal course of business on the reply received.

Michelle R. Eason
Paralegal Specialist
Office of Petitions

UNITED STATES PATENT AND TRADEMARK OFFICE

Commissioner for Patents
United States Patent and Trademark Office
P.O. Box 1450
Alexandria, VA 22313-1450
www.uspto.gov

WARD & OLIVO
SUITE 300
382 SPRINGFIELD AVENUE
SUMMIT, NJ 07901

MAILED
MAR 28 2011
OFFICE OF PETITIONS

In re Application of	:	
Lovell et al.	:	
Application No. 11/784,388	:	DECISION ON PETITION
Filed: April 5, 2007	:	
Attorney Docket No. 630-040	:	

This is a decision on the petition under the unintentional provisions of 37 CFR 1.137(b), filed February 9, 2011, to revive the above-identified application.

The petition is **GRANTED**.

This application became abandoned for failure to timely pay the issue and publication fees on or before January 18, 2011, as required by the Notice of Allowance and Fee(s) Due mailed October 18, 2010. Accordingly, the application became abandoned on January 19, 2011. A Notice of Abandonment was mailed January 31, 2011.

The petition satisfies the requirements of 37 CFR 1.137(b) in that petitioner has supplied (1) the reply in the form of payment of the issue fee of $755 and the publication fee of $300, (2) the petition fee of $810, and (3) a proper statement of unintentional delay.

Telephone inquiries concerning this decision should be directed to the undersigned at (571) 272-6059.

This application is being referred to the Office of Data Management for processing into a patent.

A. Kelley

Alicia Kelley
Petitions Examiner
Office of Petitions

UNITED STATES PATENT AND TRADEMARK OFFICE

COMMISSIONER FOR PATENTS
UNITED STATES PATENT AND TRADEMARK OFFICE
P.O. BOX 1450
ALEXANDRIA, VA 22313-1450
www.uspto.gov

MAILED
JUL 28 2011
OFFICE OF PETITIONS

Ward & Zinna, LLC
SUITE 300
382 SPRINGFIELD AVENUE
SUMMIT NJ 07901

In re Patent No. 7,936,696
Issue Date: May 3, 2011
Application No. 11/784,388
Filed: April 5, 2007
Attorney Docket No. 630-040

: DECISION GRANTING PETITION
: UNDER 37 CFR 1.78(a)(3) AND
: REQUEST FOR CERTIFICATE OF
: CORRECTION
:

This is a decision on the petition, filed June 10, 2011, which is being treated as a petition under 37 CFR 1.78(a)(3), seeking to add a claim for priority under 35 U.S.C. § 120 to nonprovisional Application No. 09/248,371, filed February 8, 1999, by way of a certificate of correction.

The petition is **granted**.

A review of the file record fails to disclose that a claim for the benefit of priority to the above-noted, prior-filed nonprovisional application was made within the time period set forth in 37 CFR 1.78(a)(2)(ii) and further failed to include a proper reference to the prior-filed application as required by 37 CFR 1.78(a)(2)(i) and 1.78(a)(2)(iii).

The instant application was filed April 5, 2007. Therefore, since this application was filed after November 29, 2000, a petition under 37 CFR 1.78(a)(3), along with submission of a Certificate of Correction, is the appropriate avenue of relief to accept a late claim for the benefit of priority to a prior-filed nonprovisional application after issuance of the application into a patent. See, MPEP 1481.

A petition for acceptance of a claim for late priority under 37 CFR 1.78(a)(3) must be accompanied by:

(1) the reference required by 35 U.S.C. § 120 and 37 CFR 1.78(a)(2)(i) of the prior-filed application, unless previously submitted;
(2) the surcharge set forth in § 1.17(t); and
(3) a statement that the entire delay between the date the claim was due under 37 CFR 1.78(a)(2)(ii) and the date the claim was filed was unintentional. The Director may require additional information where there is a question whether the delay was unintentional.

As the petition for acceptance of an unintentionally delayed claim for the benefit of priority under 35 U.S.C. § 120 to the above-noted, prior-filed nonprovisional application satisfies the conditions of 37 CFR 1.78(a)(3), the petition is granted.

A corrected Filing Receipt, which includes the priority claim to the above-noted, prior-filed nonprovisional application, accompanies this decision on petition.

Petitioner is advised that the granting of this petition and the mailing of a corrected Filing Receipt should not be viewed as an indication that a determination has been made that this application is entitled to claim benefit of the prior-filed application. A determination that applicant is entitled to claim benefit of the prior-filed application will be made by the Examiner prior to the mailing of a certificate of correction.

As authorized, the $1,410.00 surcharge fee, as well as the $100 certificate of correction fee, will be charged to petitioner's Deposit Account No. 23-0420.

Any inquiries concerning this decision may be directed to the undersigned at (571) 272-3205.

This application is being referred to the Certificates of Correction Branch for processing the request for a certificate of correction in accordance with this decision on the petition under 37 CFR 1.78(a)(3).

/ALESIA M. BROWN/

Alesia M. Brown
Attorney Advisor
Office of Petitions

ATTACHMENT: Corrected Filing Receipt

UNITED STATES PATENT AND TRADEMARK OFFICE

UNITED STATES DEPARTMENT OF COMMERCE
United States Patent and Trademark Office
Address: COMMISSIONER FOR PATENTS
P.O. Box 1450
Alexandria, Virginia 22313-1450
www.uspto.gov

APPLICATION NUMBER	FILING or 371(c) DATE	GRP ART UNIT	FIL FEE REC'D	ATTY.DOCKET.NO	TOT CLAIMS	IND CLAIMS
11/784,388	04/05/2007	2474	865	630-040	18	2

CONFIRMATION NO. 4902

CORRECTED FILING RECEIPT

27776
Ward & Zinna, LLC
SUITE 300
382 SPRINGFIELD AVENUE
SUMMIT, NJ 07901

OC000000048908772

Date Mailed: 07/21/2011

Receipt is acknowledged of this non-provisional patent application. The application will be taken up for examination in due course. Applicant will be notified as to the results of the examination. Any correspondence concerning the application must include the following identification information: the U.S. APPLICATION NUMBER, FILING DATE, NAME OF APPLICANT, and TITLE OF INVENTION. Fees transmitted by check or draft are subject to collection. Please verify the accuracy of the data presented on this receipt. **If an error is noted on this Filing Receipt, please submit a written request for a Filing Receipt Correction. Please provide a copy of this Filing Receipt with the changes noted thereon. If you received a "Notice to File Missing Parts" for this application, please submit any corrections to this Filing Receipt with your reply to the Notice. When the USPTO processes the reply to the Notice, the USPTO will generate another Filing Receipt incorporating the requested corrections**

Applicant(s)

Anthony M. Lovell, Cambridge, MA;
Sylvan Clebsch, San Francisco, CA;
Greg Cockroft, Grand Ledge, MI;

Power of Attorney:
John Olivo--35634

Domestic Priority data as claimed by applicant

This application is a CON of 10/644,700 08/19/2003 PAT 7,206,311
which is a CON of 09/248,371 02/08/1999 PAT 6,633,570

Foreign Applications (You may be eligible to benefit from the **Patent Prosecution Highway** program at the USPTO. Please see http://www.uspto.gov for more information.)

If Required, Foreign Filing License Granted: 04/27/2007

The country code and number of your priority application, to be used for filing abroad under the Paris Convention, is **US 11/784,388**

Projected Publication Date: Not Applicable

Non-Publication Request: No

Early Publication Request: No
**** SMALL ENTITY ****

Title

EFFICIENT TRANSMISSION OF DATA TO MULTIPLE NETWORK NODES

Preliminary Class

370

PROTECTING YOUR INVENTION OUTSIDE THE UNITED STATES

Since the rights granted by a U.S. patent extend only throughout the territory of the United States and have no effect in a foreign country, an inventor who wishes patent protection in another country must apply for a patent in a specific country or in regional patent offices. Applicants may wish to consider the filing of an international application under the Patent Cooperation Treaty (PCT). An international (PCT) application generally has the same effect as a regular national patent application in each PCT-member country. The PCT process **simplifies** the filing of patent applications on the same invention in member countries, but **does not result** in a grant of "an international patent" and does not eliminate the need of applicants to file additional documents and fees in countries where patent protection is desired.

Almost every country has its own patent law, and a person desiring a patent in a particular country must make an application for patent in that country in accordance with its particular laws. Since the laws of many countries differ in various respects from the patent law of the United States, applicants are advised to seek guidance from specific foreign countries to ensure that patent rights are not lost prematurely.

Applicants also are advised that in the case of inventions made in the United States, the Director of the USPTO must issue a license before applicants can apply for a patent in a foreign country. The filing of a U.S. patent application serves as a request for a foreign filing license. The application's filing receipt contains further information and guidance as to the status of applicant's license for foreign filing.

Applicants may wish to consult the USPTO booklet, "General Information Concerning Patents" (specifically, the section entitled "Treaties and Foreign Patents") for more information on timeframes and deadlines for filing foreign patent applications. The guide is available either by contacting the USPTO Contact Center at 800-786-9199, or it can be viewed on the USPTO website at http://www.uspto.gov/web/offices/pac/doc/general/index.html.

For information on preventing theft of your intellectual property (patents, trademarks and copyrights), you may wish to consult the U.S. Government website, http://www.stopfakes.gov. Part of a Department of Commerce initiative, this website includes self-help "toolkits" giving innovators guidance on how to protect intellectual property in specific countries such as China, Korea and Mexico. For questions regarding patent enforcement issues, applicants may call the U.S. Government hotline at 1-866-999-HALT (1-866-999-4158).

LICENSE FOR FOREIGN FILING UNDER

Title 35, United States Code, Section 184

Title 37, Code of Federal Regulations, 5.11 & 5.15

GRANTED

The applicant has been granted a license under 35 U.S.C. 184, if the phrase "IF REQUIRED, FOREIGN FILING LICENSE GRANTED" followed by a date appears on this form. Such licenses are issued in all applications where the conditions for issuance of a license have been met, regardless of whether or not a license may be required as

set forth in 37 CFR 5.15. The scope and limitations of this license are set forth in 37 CFR 5.15(a) unless an earlier license has been issued under 37 CFR 5.15(b). The license is subject to revocation upon written notification. The date indicated is the effective date of the license, unless an earlier license of similar scope has been granted under 37 CFR 5.13 or 5.14.

This license is to be retained by the licensee and may be used at any time on or after the effective date thereof unless it is revoked. This license is automatically transferred to any related applications(s) filed under 37 CFR 1.53(d). This license is not retroactive.

The grant of a license does not in any way lessen the responsibility of a licensee for the security of the subject matter as imposed by any Government contract or the provisions of existing laws relating to espionage and the national security or the export of technical data. Licensees should apprise themselves of current regulations especially with respect to certain countries, of other agencies, particularly the Office of Defense Trade Controls, Department of State (with respect to Arms, Munitions and Implements of War (22 CFR 121-128)); the Bureau of Industry and Security, Department of Commerce (15 CFR parts 730-774); the Office of Foreign AssetsControl, Department of Treasury (31 CFR Parts 500+) and the Department of Energy.

NOT GRANTED

No license under 35 U.S.C. 184 has been granted at this time, if the phrase "IF REQUIRED, FOREIGN FILING LICENSE GRANTED" DOES NOT appear on this form. Applicant may still petition for a license under 37 CFR 5.12, if a license is desired before the expiration of 6 months from the filing date of the application. If 6 months has lapsed from the filing date of this application and the licensee has not received any indication of a secrecy order under 35 U.S.C. 181, the licensee may foreign file the application pursuant to 37 CFR 5.15(b).

SPE RESPONSE FOR CERTIFICATE OF CORRECTION

Paper No.:20111018

DATE : October 18, 2011

TO SPE OF : ART UNIT 2617

SUBJECT : Request for Certificate of Correction on Patent No.: 7986950

A response is requested with respect to the accompanying request for a certificate of correction.

Please complete this form and return with file, within **7** days to:
Certificates of Correction Branch - ST (South Tower) 9A22
Palm location **7590** - Tel. No. (703) 305-8309

With respect to the change(s) requested, correcting Office and/or Applicant's errors, should the patent read as shown in the certificate of correction? No new matter should be introduced, nor should the scope or meaning of the claims be changed.

Thank You For Your Assistance **Certificates of Correction Branch**

The request for issuing the above-identified correction(s) is hereby:

Note your decision on the appropriated box.

☒ **Approved** All changes apply.

☐ **Approved in Part** Specify below which changes **do not** apply.

☐ **Denied** State the reasons for denial below.

Comments:

/JINSONG HU/
Supervisory Patent Examiner.Art Unit 2617

UNITED STATES PATENT AND TRADEMARK OFFICE

Commissioner for Patents
United States Patent and Trademark Office
P.O. Box 1450
Alexandria, VA 22313-1450
www.uspto.gov

LAW OFFICE OF ROBERT E. KASODY,
PROFESSIONAL CORPORATION
6601 CENTER DRIVE WEST, SUITE #500
LOS ANGELES CA 90045

MAILED

OCT 12 2010

OFFICE OF PETITIONS

In re Application of	:	
SCALISI, Joseph F.	:	
Application No. 11/784,400	:	DECISION ON PETITION
Filed: April 05, 2007	:	TO WITHDRAW
Attorney Docket No. **LBTECH.002DV2**	:	FROM RECORD
	:	

This is a decision on the Request to Withdraw as attorney or agent of record under 37 C.F.R. § 1.36(b), filed September 02, 2010.

The request is **APPROVED**.

A grantable request to withdraw as attorney/agent of record must be signed by every attorney/agent seeking to withdraw or contain a clear indication that one attorney is signing on behalf of another/others. The Office requires the practitioner(s) requesting withdrawal to certify that he, she, or they have: (1) given reasonable notice to the client, prior to the expiration of the response period, that the practitioner(s) intends to withdraw from employment; (2) delivered to the client or a duly authorized representative of the client all papers and property (including funds) to which the client is entitled; and (3) notified the client of any responses that may be due and the time frame within which the client must respond, pursuant 37 CFR 10.40(c).

The request was signed by Robert E. Kasody on behalf of all attorneys of record who are associated with customer No. 70515. All attorneys/agents associated have been withdrawn. Applicant is reminded that there is no attorney of record at this time.

All future correspondence will be directed to the first named inventor Joseph F. Scalisi at the address indicated below.

There is an outstanding Office action mailed May 17, 2010 that requires a reply from the applicant.

Telephone inquiries concerning this decision should be directed to Michelle R. Eason at 571-272-4231.

Michelle R. Eason
Paralegal Specialist
Office of Petitions

cc: **JOSEPH F. SCALISI**
38 DISCOVERY, SUITE 150
IRVINE, CA 92618

UNITED STATES PATENT AND TRADEMARK OFFICE

Commissioner for Patents
United States Patent and Trademark Office
P.O. Box 1450
Alexandria, VA 22313-1450
www.uspto.gov

MAILED

NOV 15 2010

OFFICE OF PETITIONS

BRINKS HOFER GILSON & LIONE /
YAHOO! OVERTURE
P.O. BOX 10395
CHICAGO IL 60610

In re Application of :
Duane Valz :
Application No. 11/784,481 :
Filed: April 6, 2007 :
For: DYNAMIC BID PRICING FOR :
SPONSORED SEARCH :

ON APPLICATION FOR
PATENT TERM ADJUSTMENT

This is in response to the "REQUEST FOR RECONSIDERATION OF PATENT TERM ADJUSTMENT PURSUANT TO 37 CFR §1.705(b)", filed August 3, 2010. Applicant requests that the determination of patent term adjustment be corrected from two hundred forty-four (244) days to three hundred twenty-five (325) days.

The Office acknowledges submission of the $200.00 fee set forth in 37 CFR 1.18(e) for consideration of the application for patent term adjustment under 37 CFR 1.705(b).

The application for patent term adjustment is **GRANTED**.

Applicant disputes the 83 day reduction for the submission of the information disclosure on November 3, 2009. Applicant contends the November 3, 2009 IDS contained a statement pursuant to 37 CFR 1.704(d) and thus no reduction is required. Applicant also acknowledges that a 2 day reduction for the submission of the IDS on August 14, 2009, two days after a response to the May 12, 2009 Office action was submitted.

A review shows that the 83 day reduction for the submission of the information disclosure statements on November 3, 2009 was not warranted. 37 CFR §1.704(c)(8) provides that a period of reduction is entered for:

> Circumstances that constitute a failure of the applicant to engage in reasonable efforts to conclude processing or examination of an application also include the

following circumstances, which will result in the following reduction of the period of adjustment set forth in § 1.703 to the extent that the periods are not overlapping:

(8) Submission of a supplemental reply or other paper, other than a supplemental reply or other paper expressly requested by the examiner, after a reply has been filed, in which case the period of adjustment set forth in § 1.703 shall be reduced by the number of days, if any, beginning on the day after the date the initial reply was filed and ending on the date that the supplemental reply or other such paper was filed;

37 CFR 1.704(d) provides:

> A paper containing only an information disclosure statement in compliance with § § 1.97 and 1.98 will not be considered a failure to engage in reasonable efforts to conclude prosecution (processing or examination) of the application under paragraphs (c)(6), (c)(8), (c)(9), or (c)(10) of this section if it is accompanied by a statement that each item of information contained in the information disclosure statement was first cited in any communication from a foreign patent office in a counterpart application and that this communication was not received by any individual designated in § 1.56(c) more than thirty days prior to the filing of the information disclosure statement. This thirty-day period is not extendable.

In this instance, the information disclosure statement submitted on November 3, 2009 contained a statement pursuant to 37 CFR 1.704(d). Thus, the submission of the IDS does not constitute a failure to engage in reasonable efforts to conclude prosecution. Accordingly, the 83 day reduction will be removed.

A review of the record confirms that applicants should have been assessed a 2 day reduction for the submission of the IDS on August 14, 2009 after the reply to the office action was submitted on August 12, 2009. A review of the IDS submitted on August 14, 2009 confirms it did not contain a statement pursuant to 37 CFR 1.704(d).

Applicant's delay prior to the mailing of the Notice of Allowance is 32 (30 + 2) days. Office delay prior to the mailing of the Notice of Allowance is 357 (340 + 17) days.

In view thereof, the correct patent term adjustment at the time of the mailing of the notice of allowance is three hundred twenty-five (325) days.

Any request for reconsideration of the patent term adjustment indicated on the patent must be timely filed within 2 months after issuance pursuant to 37 CFR 1.705(d) and **must** include payment of the required fee under 37 CFR 1.18(e).

The Office of Data Management has been advised of this decision. This application is being referred to the Office of Data Management for issuance of the patent.

Telephone inquiries specific to this matter should be directed to Petitions Attorney Charlema Grant at (571) 272-3215.

Anthony Knight
Director
Office of Petitions

Enclosure: Copy of REVISED PALM Screen

Patent Term Adjustments

PTA/PTE Information | Patent Term Adjustment | Patent Term Extension

Application Number*: 11784481 Search Explanation of PTA Calculation Explanation of PTE Calculation

PTA Calculations for Application: 11784481

Application Filing Date	04/06/2007	OverLapping Days Between (A and B) or (A and C)	0
Issue Date of Patent		Non-Overlapping USPTO Delays:	357
A Delays	357	PTO Manual Adjustment	81
B Delays	0	Applicant Delay (APPL)	113
C Delays	0	Total PTA (days)	325

* - Sorted Column

File Contents History

Action Number	Action Recorded Date	Action Due Date	Action Code	Action Description	Duration PTO	Duration APPL	Parent Action Number
71	11/03/2010		P028	Adjustment of PTA Calculation by PTO	81		0
58	06/24/2010		MN/=.	Mail Notice of Allowance			0
57	06/22/2010		IREV	Issue Revision Completed			0
56	06/22/2010		OVER	Document Verification			0
55	06/22/2010		N/=.	Notice of Allowance Data Verification Completed			0
54	06/22/2010		DOCK	Case Docketed to Examiner in GAU			0
52	06/21/2010		EX.A	Examiner's Amendment Communication			0
51	06/21/2010		CNTA	Notice of Allowability			0
53	06/16/2010		EXIN	Examiner Interview Summary Record (PTOL - 413)			0
49	04/29/2010		FWDX	Date Forwarded to Examiner			0
46	04/29/2010		ABN9	Disposal for a RCE / CPA / R129			0
48	04/28/2010		AHPR	RCE- AF Processed			0
47	04/28/2010	03/29/2010	RCEX	Request for Continued Examination (RCE)		29	36
45	04/28/2010		XT/G	Request for Extension of Time - Granted			0
44	04/28/2010		BRCE	Workflow - Request for RCE - Begin			0
43	03/11/2010		MCTAV	Mail Advisory Action (PTOL - 303)			0
42	03/10/2010		CTAV	Advisory Action (PTOL-303)			0
41	03/03/2010		FWDX	Date Forwarded to Examiner			0
40	03/01/2010		A.NE	Amendment after Final Rejection			0
36	12/29/2009	12/12/2009	MCTFR	Mail Final Rejection (PTOL - 326)	17		27
35	12/22/2009		CTFR	Final Rejection			0
37	11/03/2009	08/12/2009	M844	Information Disclosure Statement (IDS) Filed		83	27
33	11/03/2009		IDSC	Information Disclosure Statement considered			0
31	11/03/2009		WIDS	Information Disclosure Statement (IDS) Filed			0
28	10/03/2009		FWDX	Date Forwarded to Examiner			0
39	08/14/2009		RCAP	Reference capture on IDS			0
38	08/14/2009		M844	Information Disclosure Statement (IDS) Filed			0
32	08/14/2009		IDSC	Information Disclosure Statement considered			0
26	08/14/2009		WIDS	Information Disclosure Statement (IDS) Filed			0
27	08/12/2009		A...	Response after Non-Final Action			0
24	05/12/2009	06/06/2008	MCTNF	Mail Non-Final Rejection	340		1
23	05/11/2009		CTNF	Non-Final Rejection			0
18	03/30/2009		DOCK	Case Docketed to Examiner in GAU			0
30	11/03/2008		RCAP	Reference capture on IDS			0
29	11/03/2008		M844	Information Disclosure Statement (IDS) Filed			0
19	11/03/2008		IDSC	Information Disclosure Statement considered			0
16	11/03/2008		WIDS	Information Disclosure Statement (IDS) Filed			0
15	10/09/2008		PG-ISSUE	PG-Pub Issue Notification			0
14	11/04/2007		DOCK	Case Docketed to Examiner in GAU			0
13	09/15/2007		TI1050	Transfer Inquiry to GAU			0
11	05/22/2007		TSSCOMP	IFW TSS Processing by Tech Center Complete			0
8	05/15/2007		OIPE	Application Dispatched from OIPE			0
7	04/30/2007		PGPC	Sent to Classification Contractor			0
6	04/30/2007		COMP	Application Is Now Complete			0
3	04/19/2007		L194	Cleared by OIPE CSR			0
2	04/14/2007		SCAN	IFW Scan & PACR Auto Security Review			0
1	04/09/2007		IEXX	Initial Exam Team nn			0
20	04/06/2007		IDSC	Information Disclosure Statement considered			0
12	04/06/2007		WIDS	Information Disclosure Statement (IDS) Filed			0
10	04/06/2007		RCAP	Reference capture on IDS			0
9	04/06/2007		M844	Information Disclosure Statement (IDS) Filed			0

Export to: Excel

UNITED STATES PATENT AND TRADEMARK OFFICE

Commissioner for Patents
United States Patent and Trademark Office
P.O. Box 1450
Alexandria, VA 22313-1450
www.uspto.gov

THE GATES CORPORATION
IP LAW DEPT. 10-A3
1551 WEWATTA STREET
DENVER CO 80202

MAILED
SEP 01 2011
OFFICE OF PETITIONS

In re Application of	:	
Railsback et al.	:	
Application No. 11/784,494	:	DECISION ON PETITION
Filed: April 6, 2007	:	UNDER 37 CFR 1.137(b)
Attorney Docket No. H07-041A	:	

This is a decision on the petition, filed March 29, 2011, which is being treated as a petition under 37 CFR 1.137(b) to revive the instant nonprovisional application for failure to timely notify the U.S. Patent and Trademark (USPTO) of the filing of an application in a foreign country, or under a multinational treaty that requires publication of applications eighteen months after filing. *See* 37 CFR 1.137(f).

The petition is **GRANTED**.

Petitioner states that the instant nonprovisional application is the subject of an application filed in an eighteen-month publication country on March 31, 2008. However, the USPTO was unintentionally not notified of this filing within 45 days subsequent to the filing of the subject application in an eighteen-month publication country.

In view of the above, this application became abandoned pursuant to 35 U.S.C. § 122(b)(2)(B)(iii) and 37 CFR 1.213(c) for failure to timely notify the Office of the filing of an application in a foreign country or under a multilateral international agreement that requires publication of applications 18 months after filing.

A petition to revive an application abandoned pursuant to 35 U.S.C. 122(b)(2)(B)(iii) for failure to notify the USPTO of a foreign filing must be accompanied by:

(1) the required reply which is met by the notification of such filing in a foreign country or under a multinational treaty;
(2) the petition fee as set forth in 37 CFR 1.17(m); and
(3) a statement that the entire delay in filing the required reply from the due date of the reply until the filing of a grantable petition was unintentional.

The instant petition has been found to be in compliance with 37 CFR 1.137(b). Accordingly, the failure to timely notify the USPTO of a foreign or international filing within 45 days after the date of filing of

such foreign or international application as provided by 35 U.S.C. § 122(b)(2)(B)(iii) and 37 CFR 1.213(c) is accepted as having been unintentionally delayed.

The previous Request and Certification under 35 U.S.C. § 122(b)(2)(B)(i) has been rescinded. A Notice Regarding Rescission of Nonpublication Request which sets forth the projected publication date of December 8, 2011, accompanies this decision on petition.

Telephone inquiries concerning this decision should be directed to the undersigned at (571) 272-3206.

This application is being referred to Technology Center Art Unit 3754 for examination in due course.

/Liana Walsh/
Liana Walsh
Petitions Examiner
Office of Petitions

ATTACHMENT: Notice Regarding Rescission of Nonpublication Request

UNITED STATES PATENT AND TRADEMARK OFFICE

UNITED STATES DEPARTMENT OF COMMERCE
United States Patent and Trademark Office
Address: COMMISSIONER FOR PATENTS
P.O. Box 1450
Alexandria, Virginia 22313-1450
www.uspto.gov

APPLICATION NUMBER	FILING OR 371(C) DATE	FIRST NAMED APPLICANT	ATTY. DOCKET NO./TITLE
11/784,494	04/06/2007	Layne Railsback	H07-041A

CONFIRMATION NO. 4681

26683
THE GATES CORPORATION
IP LAW DEPT. 10-A3
1551 WEWATTA STREET
DENVER, CO 80202

NONPUBLICATION RESCISSION LETTER

OC000000049643635

Date Mailed: 09/01/2011

Communication Regarding Rescission Of Nonpublication Request and/or Notice of Foreign Filing

Applicant's rescission of the previously-filed nonpublication request and/or notice of foreign filing is acknowledged. The paper has been reflected in the Patent and Trademark Office's (USPTO's) computer records so that the earliest possible projected publication date can be assigned.

The projected publication date is 12/08/2011.

If applicant rescinded the nonpublication request before or on the date of "foreign filing,"[1] then no notice of foreign filing is required.

If applicant foreign filed the application after filing the above application and before filing the rescission, and the rescission did not also include a notice of foreign filing, then a notice of foreign filing (not merely a rescission) is required to be filed within 45 days of the date of foreign filing. See 35 U.S.C. § 122(b)(2)(B)(iii), and Clarification of the United States Patent and Trademark Office's Interpretation of the Provisions of 35 U.S.C. § 122(b)(2)(B)(ii)-(iv), 1272 Off. Gaz. Pat. Office 22 (July 1, 2003).

If a notice of foreign filing is required and is not filed within 45 days of the date of foreign filing, then the application becomes abandoned pursuant to 35 U.S.C. § 122(b)(2)(B)(iii). In this situation, applicant should either file a petition to revive or notify the Office that the application is abandoned. See 37 CFR 1.137(f). Any such petition to revive will be forwarded to the Office of Petitions for a decision. Note that the filing of the petition will not operate to stay any period of reply that may be running against the application.

Questions regarding petitions to revive should be directed to the Office of Petitions at (571) 272-3282.

[1] Note, for purpose of this notice, that "foreign filing" means "filing an application directed to the same invention in another country, or under a multilateral international agreement, that requires publication of applications 18 months after filing".

/akelley-collier/

Office of Data Management, Application Assistance Unit (571) 272-4000, or (571) 272-4200, or 1-888-786-0101

UNITED STATES PATENT AND TRADEMARK OFFICE

COMMISSIONER FOR PATENTS
UNITED STATES PATENT AND TRADEMARK OFFICE
P.O. BOX 1450
ALEXANDRIA, VA 22313-1450
www.uspto.gov

DORITY & MANNING, P.A.
POST OFFICE BOX 1449
GREENVILLE SC 29602-1449

MAILED

SEP 08 2010

OFFICE OF PETITIONS

In re Application of
Nenyei, et al.
Application No. 11/784,503
Filed: April 6, 2007
Docket No.: AGX-145

: DECISION ON PETITION

This is a decision on the petition to withdraw the holding of abandonment under 37 CFR 1.181, filed May 25, 2010.

The Notice of Abandonment mailed May 4, 2010 indicates that the application is abandoned for failure to timely submit a proper reply to the final Office action mailed March 13, 2009. The Notice of Abandonment further stated that "Applicants checked both Notice of Appeal and Pre-Appeal Brief Request for review, whereas the box checked Notice of Appeal takes precedence over the Pre-Appeal Brief Request for Review. Applicants have failed to file an Appeal Brief pursuant to 37 CFR 41.37 therefore, the Application is abandoned."

Petitioners assert that the holding of abandonment is improper because the appeal brief, if required, would be due one month after the mail date of the pre-appeal brief conference decision which has yet to be mailed.

Petitioners' arguments have been carefully considered and found persuasive. Applicants are permitted to request a pre-brief conference before filing an appeal brief as long as Notice of Appeal has been given. See, 1296 OG Notice 67 (July 12, 2005).

In view of the evidence presented, the petition to withdraw the holding of abandonment is hereby GRANTED.

The Notice of Abandonment is hereby VACATED and the holding of abandonment is WITHDRAWN.

The application file is being forwarded to Technology Center 2823 for processing of the Pre-Appeal Brief Conference Request. The time period for submission of any appeal brief that may be due will be set in the pre-appeal brief conference decision.

Telephone inquiries concerning this matter may be directed to the undersigned at (571) 272-3205.

/ALESIA M. BROWN/

Alesia M. Brown
Petitions Attorney
Office of Petitions

UNITED STATES PATENT AND TRADEMARK OFFICE

Commissioner for Patents
United States Patent and Trademark Office
P.O. Box 1450
Alexandria, VA 22313-1450
www.uspto.gov

ANDREW L. NEY
Barley Snyder LLC
1000 Westlakes Drive
Suite 275
Berwyn PA 19312

MAILED

JAN 03 2011

OFFICE OF PETITIONS

In re Application of

Snyder

Application No. 11/784,542

Filed: April 6, 2007

Attorney Docket No. CLS-010US

DECISION ON PETITION

This is a decision on the petition under 37 CFR §1.137(b), filed November 23, 2010, to revive the above-identified application.

The petition is **granted**.

This application became abandoned for failure to timely remit the issue fee of $755.00 as required by the Notice of Allowance and Issue Fee Due (the "Notice") mailed March 16, 2010. The Notice set forth a three (3) month statutory period for reply. No response was received within the allowable period. Accordingly, this application became abandoned on June 17, 2010. A Notice of Abandonment was mailed on July 1, 2010.

The issue fee was received on November 23, 2010.

Form PTOL-85B, filed November 23, 2010, is noted and made of record.

The application is being directed to the Office of Data Management for further processing.

Telephone inquiries concerning this decision may be directed to the undersigned at (571) 272-3222.

/Kenya A. McLaughlin/

Kenya A. McLaughlin
Petitions Attorney
Office of Petitions

UNITED STATES PATENT AND TRADEMARK OFFICE

COMMISSIONER FOR PATENTS
UNITED STATES PATENT AND TRADEMARK OFFICE
P.O. BOX 1450
ALEXANDRIA, VA 22313-1450
www.uspto.gov

ELWOOD BATES
49343 ELK VIEW RD.
CHILLIWACK BC V4Z-1E8 CANADA

MAILED
MAR 03 2011
OFFICE OF PETITIONS

In re Application of :
BATES, ELWOOD :
Application No. 11/784,598 : DECISION ON PETITION
Filed: 04/09/2007 :
Attorney Docket No. BATES :

This is a decision on the petition under 37 CFR 1.181, filed December 2, 2010, to withdraw the holding of abandonment.

The petition is **dismissed**.

On October 1, 2009, the Office mailed a final Office action, which set a three-month shortened statutory period to reply. No extensions of time for response pursuant to 37 CFR 1.136(a) were obtained. Accordingly, the application became abandoned on January 2, 2010. A Notice of Abandonment was mailed on April 26, 2010. On December 2, 2010, petitioner filed the present petition.

In the petition, petitioner asserted that he filed a timely response to the final Office action on November 20, 2009. The reply in the form of an amendment was located in the incorrect file of Application No. 12/592,153 and was transferred to the correct application, No. 11/784,598. Accordingly, the amendment after final rejection was filed timely. However, the Examiner has reviewed the amendment filed November 20, 2009, and has issued an Advisory Action Before the Filing of an Appeal Brief, which is enclosed.

As stated in the Advisory Action, the Examiner has concluded that the amendment failed to place this application in condition for allowance. For this reason, there is no dispute that the application is abandoned for failure to submit a proper reply to the final Office action. The Office notes that a response to a final Office action may be entered if it places the application in condition for allowance. However, the admission or refusal to admit an amendment after a final rejection will not operate to relieve the application from its condition. The entry of an amendment after a final rejection is not a matter of right. It is clear from 37 CFR 1.116 that abandonment of an application is risked when an

amendment is filed after a final Office action. Abandonment takes place by operation of law for failure to timely submit a proper reply to an Office action, not by the mailing of an Office communication, such an Advisory Action.[1] The mere filing of an amendment in response to a final Office action does not save the application from abandonment. Rather, the filing of a Notice of Appeal, a Request for Continued Examination accompanied by a proper submission, or a continuing application in response to a final rejection guarantees the pendency of the application.

The application is currently abandoned due to petitioner's failure to submit a proper response to the final Office action. Under the circumstances of this case, the application did not become abandoned due to a delay in reviewing the amendment or the mailing of the Advisory Action or any other error on the part of the U.S. Patent and Trademark Office. Accordingly, the petition to withdraw the holding of abandonment is **dismissed**.

Petitioner may wish to consider filing a petition under 37 CFR 1.137(b) to revive the application. The provisions of 37 CFR 1.137(b) provide that where the delay in reply was unintentional, a petition may be filed to revive an abandoned application pursuant to 37 CFR 1.137(b). A grantable petition pursuant to 37 CFR 1.137(b) must be accompanied by:

(1) The required reply to the outstanding Office action;

(2) The petition fee as set forth in 1.17(m) (currently an additional $810.00);

(3) A statement that the entire delay in filing the required reply from the due date for the reply until the filing of a grantable petition was unintentional.

In a nonprovisional application abandoned for failure to reply to a final action, the reply required for consideration of a petition to revive must be:

(1) A Notice of Appeal and appeal fee;

(2) An amendment under 37 CFR 1.116 that cancels all the rejected claims or otherwise *prima facie* places the application in condition for allowance;

(3) The filing of an RCE (accompanied by a submission that meets the reply requirements of 37 CFR 1.111 and the requisite fee) under 37 CFR 1.114 for utility or plant applications filed on or after June 8, 1995; or

(4) The filing of a continuing application under 37 CFR 1.53(b).

The appropriate petition form is enclosed for petitioner's convenience.

---

[1] MPEP 711.03(c). See Lorenz v. Finkl, 333 F.2d 885, 889-90, 142 USPQ 26, 299-30 (CCPA 1964); Krahn v. Comm'r, 15 USPQ2d 1823, 1824 (E.D. Va. 1990); In re Application of Fischer, 6 USPQ2d 1573, 1574 (Comm'r Pat. 1984).

Further correspondence with respect to this matter should be addressed as follows:

By mail: Mail Stop Petition
Commissioner for Patents
P.O. Box 1450
Alexandria, VA 22313-1450

By FAX: (571) 273-8300
Attn: Office of Petitions

By hand: Customer Service Window
Randolph Building
401 Dulany Street
Alexandria, VA 22314

Correspondence may also be submitted via the Electronic Filing System of the USPTO.

Telephone inquiries related to this decision should be directed to the undersigned at (571) 272-3211.

Christina Tartera Donnell

Christina Tartera Donnell
Senior Petitions Attorney
Office of Petitions

Enclosures

Advisory Action Before the Filing of an Appeal Brief	Application No. 11/784,598	Applicant(s) BATES, ELWOOD	
	Examiner Donald Underwood	Art Unit 3652	

--The MAILING DATE of this communication appears on the cover sheet with the correspondence address --

THE REPLY FILED 20 November 2009 FAILS TO PLACE THIS APPLICATION IN CONDITION FOR ALLOWANCE.

1. ☒ The reply was filed after a final rejection, but prior to or on the same day as filing a Notice of Appeal. To avoid abandonment of this application, applicant must timely file one of the following replies: (1) an amendment, affidavit, or other evidence, which places the application in condition for allowance; (2) a Notice of Appeal (with appeal fee) in compliance with 37 CFR 41.31; or (3) a Request for Continued Examination (RCE) in compliance with 37 CFR 1.114. The reply must be filed within one of the following time periods:
   a) ☒ The period for reply expires 3 months from the mailing date of the final rejection.
   b) ☐ The period for reply expires on: (1) the mailing date of this Advisory Action, or (2) the date set forth in the final rejection, whichever is later. In no event, however, will the statutory period for reply expire later than SIX MONTHS from the mailing date of the final rejection.
   Examiner Note: If box 1 is checked, check either box (a) or (b). ONLY CHECK BOX (b) WHEN THE FIRST REPLY WAS FILED WITHIN TWO MONTHS OF THE FINAL REJECTION. See MPEP 706.07(f).

Extensions of time may be obtained under 37 CFR 1.136(a). The date on which the petition under 37 CFR 1.136(a) and the appropriate extension fee have been filed is the date for purposes of determining the period of extension and the corresponding amount of the fee. The appropriate extension fee under 37 CFR 1.17(a) is calculated from: (1) the expiration date of the shortened statutory period for reply originally set in the final Office action; or (2) as set forth in (b) above, if checked. Any reply received by the Office later than three months after the mailing date of the final rejection, even if timely filed, may reduce any earned patent term adjustment. See 37 CFR 1.704(b).

NOTICE OF APPEAL

2. ☐ The Notice of Appeal was filed on _____. A brief in compliance with 37 CFR 41.37 must be filed within two months of the date of filing the Notice of Appeal (37 CFR 41.37(a)), or any extension thereof (37 CFR 41.37(e)), to avoid dismissal of the appeal. Since a Notice of Appeal has been filed, any reply must be filed within the time period set forth in 37 CFR 41.37(a).

AMENDMENTS

3. ☒ The proposed amendment(s) filed after a final rejection, but prior to the date of filing a brief, will not be entered because
   (a) ☒ They raise new issues that would require further consideration and/or search (see NOTE below);
   (b) ☐ They raise the issue of new matter (see NOTE below);
   (c) ☐ They are not deemed to place the application in better form for appeal by materially reducing or simplifying the issues for appeal; and/or
   (d) ☐ They present additional claims without canceling a corresponding number of finally rejected claims.
   NOTE: *See Continuation Sheet*. (See 37 CFR 1.116 and 41.33(a)).
4. ☐ The amendments are not in compliance with 37 CFR 1.121. See attached Notice of Non-Compliant Amendment (PTOL-324).
5. ☐ Applicant's reply has overcome the following rejection(s): _____.
6. ☐ Newly proposed or amended claim(s) _____ would be allowable if submitted in a separate, timely filed amendment canceling the non-allowable claim(s).
7. ☒ For purposes of appeal, the proposed amendment(s): a) ☒ will not be entered, or b) ☐ will be entered and an explanation of how the new or amended claims would be rejected is provided below or appended.
   The status of the claim(s) is (or will be) as follows:
   Claim(s) allowed: _____.
   Claim(s) objected to: _____.
   Claim(s) rejected: 4-9.
   Claim(s) withdrawn from consideration: _____.

AFFIDAVIT OR OTHER EVIDENCE

8. ☐ The affidavit or other evidence filed after a final action, but before or on the date of filing a Notice of Appeal will not be entered because applicant failed to provide a showing of good and sufficient reasons why the affidavit or other evidence is necessary and was not earlier presented. See 37 CFR 1.116(e).
9. ☐ The affidavit or other evidence filed after the date of filing a Notice of Appeal, but prior to the date of filing a brief, will not be entered because the affidavit or other evidence failed to overcome all rejections under appeal and/or appellant fails to provide a showing a good and sufficient reasons why it is necessary and was not earlier presented. See 37 CFR 41.33(d)(1).
10. ☐ The affidavit or other evidence is entered. An explanation of the status of the claims after entry is below or attached.

REQUEST FOR RECONSIDERATION/OTHER

11. ☐ The request for reconsideration has been considered but does NOT place the application in condition for allowance because: _____.
12. ☐ Note the attached Information *Disclosure Statement*(s). (PTO/SB/08) Paper No(s). _____
13. ☐ Other: _____.

/Donald Underwood/
Primary Examiner, Art Unit 3652

Continuation of 3. NOTE: The extesive amendments to claims 4-9 add and delete structure thus providing new issues.

UNITED STATES PATENT AND TRADEMARK OFFICE

Commissioner for Patents
United States Patent and Trademark Office
P.O. Box 1450
Alexandria, VA 22313-1450
www.uspto.gov

ELWOOD BATES
49343 ELK VIEW RD.
CHILLIWACK BC V4Z-1E8 CANADA

MAILED
JUN 28 2011
OFFICE OF PETITIONS

In re Application of	:	
BATES, ELWOOD	:	
Application No. 11/784,598	:	DECISION ON PETITION
Filed: 04/09/2007	:	
Attorney Docket No. BATES	:	

This is a decision on the petition under 37 CFR 1.137(b), filed June 15, 2011, to revive the application.

The petition is **granted**.

On October 1, 2009, the Office mailed a final Office action, which set a three-month shortened statutory period to reply. No extensions of time for response pursuant to 37 CFR 1.136(a) were obtained. Accordingly, the application became abandoned on January 2, 2010. A Notice of Abandonment was mailed on April 26, 2010. On June 15, 2011, petitioner filed the present petition.

The petition satisfies the requirements of 37 CFR 1.137(b) in that applicant has supplied (1) the reply in the form of a RCE, the RCE fee, and the submission required by 37 CFR 1.114; (2) the petition fee; and (3) a proper statement of unintentional delay.

This application is being referred to Technology Center AU 3652 for processing of the RCE and for appropriate action by the Examiner on the amendment submitted in accordance with 37 CFR 1.114.

Telephone inquiries concerning this decision should be directed to the undersigned at (571) 272-3211.

C. T. Donnell

Christina Tartera Donnell
Senior Petitions Attorney
Office of Petitions

UNITED STATES PATENT AND TRADEMARK OFFICE

Commissioner for Patents
United States Patent and Trademark Office
P.O. Box 1450
Alexandria, VA 22313-1450
www.uspto.gov

MARGARET J. MCLAREN, P.A.
MCLAREN LEGAL SERVICES
6500 S.W. 133RD DRIVE
MIAMI, FL 33156

MAILED

MAR 09 2011

OFFICE OF PETITIONS

In re Application of	:
Raymond et al.	:
Application No. 11/784,607	: DECISION ON PETITION
Filed: April 10, 2007	: UNDER 37 CFR 1.78(a)(3)
Attorney Docket No. 1040-014U	:

This is a decision on the petition under 37 CFR 1.78(a)(3), filed December 14, 2010, to accept an unintentionally delayed claim under 35 U.S.C. § 120 for the benefit of priority to the prior-filed nonprovisional Application No. 10/947,434, filed September 23, 2004, as set forth in the amendment filed concurrently with the instant petition.

The petition is **DISMISSED**.

A petition for acceptance of a claim for late priority under 37 CFR 1.78(a)(3) is only applicable to those applications filed on or after November 29, 2000. Further, the petition is appropriate only after the expiration of the period specified in 37 CFR 1.78(a)(2)(ii). In addition, the petition under 37 CFR 1.78(a)(3) must be accompanied by:

(1) the reference required by 35 U.S.C. § 120 and 37 CFR 1.78(a)(2)(i) of the prior-filed application(s), unless previously submitted;
(2) the surcharge set forth in § 1.17(t); and
(3) a statement that the entire delay between the date the claim was due under 37 CFR 1.78(a)(2)(ii) and the date the claim was filed was unintentional. The Commissioner may require additional information where there is a question whether the delay was unintentional.

The instant petition does not comply with item (1) above.

A reference to add the above-noted, prior-filed applications on page one following the first sentence of the specification has been included in a concurrently filed amendment. However, the amendment is not acceptable as drafted since it improperly incorporates by reference the prior-filed applications. Petitioner's attention is directed to Dart Industries v. Banner, 636 F.2d 684, 207 USPQ 273 (C.A.D.C. 1980), where the court drew a distinction between a permissible 35 U.S.C. § 120 statement and the impermissible introduction of new matter by way of incorporation by reference in a 35 U.S.C. § 120 statement. The court specifically stated:

> Section 120 merely provides a mechanism whereby an application becomes entitled to benefit of the filing date of an earlier application disclosing the same subject matter. Common subject matter must be disclosed, in both applications, either specifically or by an express incorporation-by-reference of prior disclosed subject matter. Nothing in section 120 itself operates to carry forward any disclosure from an earlier application. In re deSeversky, supra at 674, 177 USPQ at 146-147. Section 120 contains no magical disclosure-augmenting powers able to pierce new matter barriers. It cannot, therefore, "limit" the absolute and express prohibition against new matter contained in section 251.

In order for the incorporation by reference statement to be effective as a proper safeguard against the omission of a portion of a prior application, the incorporation by reference statement must be included in the specification-as-filed, or in an amendment specifically referred to in an oath or declaration executing the application. *See* In re deSeversky, *supra*. *Note also* MPEP 201.06(c).

Accordingly, before the petition under 37 CFR 1.78(a)(3) can be granted, a substitute amendment[1] deleting the incorporation by reference statement, along with a renewed petition under 37 CFR 1.78(a)(3), is required.

Further correspondence with respect to this matter should be addressed as follows:

By mail: Mail Stop PETITIONS
Commissioner for Patents
Post Office Box 1450
Alexandria, VA 22313-1450

By hand: Customer Window located at:
U.S. Patent and Trademark Office
Customer Service Window Randolph Building
401 Dulany Street
Alexandria, VA 22314

By fax: (571) 273-8300
ATTN: Office of Petitions

Any questions concerning this matter may be directed to Alicia Kelley at (571) 272-6059.

/Liana Walsh/
Liana Walsh
Petitions Examiner
Office of Petitions

---

[1] *Note* 37 CFR 1.121

UNITED STATES PATENT AND TRADEMARK OFFICE

Commissioner for Patents
United States Patent and Trademark Office
P.O. Box 1450
Alexandria, VA 22313-1450
www.uspto.gov

MARGARET J. MCLAREN, P.A.
MCLAREN LEGAL SERVICES
6500 S.W. 133RD DRIVE
MIAMI, FL 33156

MAILED

MAY 09 2011

OFFICE OF PETITIONS

In re Application of	:	
Raymond et al.	:	
Application No. 11/784,607	:	DECISION GRANTING PETITION
Filed: April 10, 2007	:	UNDER 37 CFR 1.78(a)(3)
Attorney Docket No. 1040-014U	:	

This is a decision on the renewed petition under 37 CFR 1.78(a)(3), filed March 11, 2011, to accept an unintentionally delayed claim under 35 U.S.C. § 120 for the benefit of priority to prior-filed nonprovisional Application No. 10/947,434, filed September 23,2004, as set forth in the concurrently filed amendment.

The petition is **GRANTED**.

A petition for acceptance of a claim for late priority under 37 CFR 1.78(a)(3) is only applicable to those applications filed on or after November 29, 2000. Further, the petition is appropriate only after the expiration of the period specified in 37 CFR 1.78(a)(2)(ii). In addition, the petition under 37 CFR 1.78(a)(3) must be accompanied by:

(1) the reference required by 35 U.S.C. § 120 and 37 CFR 1.78(a)(2)(i) of the prior-filed application, unless previously submitted;
(2) the surcharge set forth in § 1.17(t); and
(3) a statement that the entire delay between the date the claim was due under 37 CFR 1.78(a)(2)(ii) and the date the claim was filed was unintentional. The Commissioner may require additional information where there is a question whether the delay was unintentional.

The instant nonprovisional application was filed after November 29, 2000, and the claim herein for the benefit of priority to the prior-filed nonprovisional application is submitted after expiration of the period specified by 37 CFR 1.78(a)(2)(ii). Therefore, this is a proper petition under 37 CFR 1.78(a)(3).

The petition complies with the requirements for a grantable petition under 37 CFR 1.78(a)(3) in that (1) a reference to the above-noted, prior-filed nonprovisional application has been included in an amendment to the first sentence of the specification following the title, as provided by 37 CFR 1.78(a)(2)(iii); (2) the surcharge fee required by 37 CFR 1.17(t) has been submitted; and (3) the petition contains a proper statement of unintentional delay. Accordingly, having found that the instant petition for acceptance of an unintentionally delayed claim for the benefit of priority under 35 U.S.C. § 120 to the above-noted, prior-filed nonprovisional application satisfies the conditions of 37 CFR 1.78(a)(3), the petition is granted.

The granting of the petition to accept the delayed benefit claim to the prior-filed application under 37 CFR 1.78(a)(3) should not be construed as meaning that the instant application is entitled to the benefit of the prior-filed application. In order for the instant application to be entitled to the benefit of the prior-filed application, all other requirements under 35 U.S.C. § 120 and 37 CFR 1.78(a)(1) and (a)(2) must be met. Similarly, the fact that the corrected Filing Receipt accompanying this decision on petition includes the prior-filed applications should not be construed as meaning that applicant is entitled to the claim for benefit of priority to the prior-filed application noted thereon. Accordingly, the examiner will, in due course, consider this benefit claim and determine whether the instant application is entitled to the benefit of the earlier filing date.

A corrected Filing Receipt, which includes the priority claim to the prior-filed nonprovisional application, accompanies this decision on petition.

Any inquiries concerning this decision may be directed to Alicia Kelley-Collier at (571) 272-6059.

This matter is being referred to Technology Center Art Unit 1653 for appropriate action on the amendment filed March 11, 2011, including consideration by the examiner of applicant's entitlement to claim benefit of priority under 35 U.S.C. § 120 to the prior-filed nonprovisional application.

/Liana Walsh/
Liana Walsh
Petitions Examiner
Office of Petitions

ATTACHMENT: Corrected Filing Receipt

UNITED STATES PATENT AND TRADEMARK OFFICE

UNITED STATES DEPARTMENT OF COMMERCE
United States Patent and Trademark Office
Address: COMMISSIONER FOR PATENTS
P.O. Box 1450
Alexandria, Virginia 22313-1450
www.uspto.gov

APPLICATION NUMBER	FILING or 371(c) DATE	GRP ART UNIT	FIL FEE REC'D	ATTY.DOCKET.NO	TOT CLAIMS	IND CLAIMS
11/784,607	04/10/2007	1653	565	1040-014U	16	2

CONFIRMATION NO. 5746

CORRECTED FILING RECEIPT

72619
Margaret J. McLaren, P.A.
McLaren Legal Services
6500 S.W. 133rd Drive
Miami, FL 33156

OC000000047549928

Date Mailed: 05/09/2011

Receipt is acknowledged of this non-provisional patent application. The application will be taken up for examination in due course. Applicant will be notified as to the results of the examination. Any correspondence concerning the application must include the following identification information: the U.S. APPLICATION NUMBER, FILING DATE, NAME OF APPLICANT, and TITLE OF INVENTION. Fees transmitted by check or draft are subject to collection. Please verify the accuracy of the data presented on this receipt. **If an error is noted on this Filing Receipt, please submit a written request for a Filing Receipt Correction. Please provide a copy of this Filing Receipt with the changes noted thereon. If you received a "Notice to File Missing Parts" for this application, please submit any corrections to this Filing Receipt with your reply to the Notice. When the USPTO processes the reply to the Notice, the USPTO will generate another Filing Receipt incorporating the requested corrections**

Applicant(s)

Laurence N. Raymond, Plantation, FL;
Paul F. Reid, Plantation, FL;

Power of Attorney: The patent practitioners associated with Customer Number 72619

Domestic Priority data as claimed by applicant

This application is a CIP of 10/947,434 09/23/2004

Foreign Applications (You may be eligible to benefit from the **Patent Prosecution Highway** program at the USPTO. Please see http://www.uspto.gov for more information.)

If Required, Foreign Filing License Granted: 04/26/2007

The country code and number of your priority application, to be used for filing abroad under the Paris Convention, is **US 11/784,607**

Projected Publication Date: Not Applicable

Non-Publication Request: No

Early Publication Request: No
**** SMALL ENTITY ****

Title

Treatment of autoimmune disorders using detoxified cobra venom compositions

Preliminary Class

424

PROTECTING YOUR INVENTION OUTSIDE THE UNITED STATES

Since the rights granted by a U.S. patent extend only throughout the territory of the United States and have no effect in a foreign country, an inventor who wishes patent protection in another country must apply for a patent in a specific country or in regional patent offices. Applicants may wish to consider the filing of an international application under the Patent Cooperation Treaty (PCT). An international (PCT) application generally has the same effect as a regular national patent application in each PCT-member country. The PCT process **simplifies** the filing of patent applications on the same invention in member countries, but **does not result** in a grant of "an international patent" and does not eliminate the need of applicants to file additional documents and fees in countries where patent protection is desired.

Almost every country has its own patent law, and a person desiring a patent in a particular country must make an application for patent in that country in accordance with its particular laws. Since the laws of many countries differ in various respects from the patent law of the United States, applicants are advised to seek guidance from specific foreign countries to ensure that patent rights are not lost prematurely.

Applicants also are advised that in the case of inventions made in the United States, the Director of the USPTO must issue a license before applicants can apply for a patent in a foreign country. The filing of a U.S. patent application serves as a request for a foreign filing license. The application's filing receipt contains further information and guidance as to the status of applicant's license for foreign filing.

Applicants may wish to consult the USPTO booklet, "General Information Concerning Patents" (specifically, the section entitled "Treaties and Foreign Patents") for more information on timeframes and deadlines for filing foreign patent applications. The guide is available either by contacting the USPTO Contact Center at 800-786-9199, or it can be viewed on the USPTO website at http://www.uspto.gov/web/offices/pac/doc/general/index.html.

For information on preventing theft of your intellectual property (patents, trademarks and copyrights), you may wish to consult the U.S. Government website, http://www.stopfakes.gov. Part of a Department of Commerce initiative, this website includes self-help "toolkits" giving innovators guidance on how to protect intellectual property in specific countries such as China, Korea and Mexico. For questions regarding patent enforcement issues, applicants may call the U.S. Government hotline at 1-866-999-HALT (1-866-999-4158).

LICENSE FOR FOREIGN FILING UNDER

Title 35, United States Code, Section 184

Title 37, Code of Federal Regulations, 5.11 & 5.15

GRANTED

The applicant has been granted a license under 35 U.S.C. 184, if the phrase "IF REQUIRED, FOREIGN FILING LICENSE GRANTED" followed by a date appears on this form. Such licenses are issued in all applications where the conditions for issuance of a license have been met, regardless of whether or not a license may be required as

set forth in 37 CFR 5.15. The scope and limitations of this license are set forth in 37 CFR 5.15(a) unless an earlier license has been issued under 37 CFR 5.15(b). The license is subject to revocation upon written notification. The date indicated is the effective date of the license, unless an earlier license of similar scope has been granted under 37 CFR 5.13 or 5.14.

This license is to be retained by the licensee and may be used at any time on or after the effective date thereof unless it is revoked. This license is automatically transferred to any related applications(s) filed under 37 CFR 1.53(d). This license is not retroactive.

The grant of a license does not in any way lessen the responsibility of a licensee for the security of the subject matter as imposed by any Government contract or the provisions of existing laws relating to espionage and the national security or the export of technical data. Licensees should apprise themselves of current regulations especially with respect to certain countries, of other agencies, particularly the Office of Defense Trade Controls, Department of State (with respect to Arms, Munitions and Implements of War (22 CFR 121-128)); the Bureau of Industry and Security, Department of Commerce (15 CFR parts 730-774); the Office of Foreign AssetsControl, Department of Treasury (31 CFR Parts 500+) and the Department of Energy.

NOT GRANTED

No license under 35 U.S.C. 184 has been granted at this time, if the phrase "IF REQUIRED, FOREIGN FILING LICENSE GRANTED" DOES NOT appear on this form. Applicant may still petition for a license under 37 CFR 5.12, if a license is desired before the expiration of 6 months from the filing date of the application. If 6 months has lapsed from the filing date of this application and the licensee has not received any indication of a secrecy order under 35 U.S.C. 181, the licensee may foreign file the application pursuant to 37 CFR 5.15(b).

UNITED STATES PATENT AND TRADEMARK OFFICE

Commissioner for Patents
United States Patent and Trademark Office
P.O. Box 1450
Alexandria, VA 22313-1450
www.uspto.gov

HONEYWELL INTERNATIONAL INC
PATENT SERVICES
101 COLUMBIA ROAD
P O BOX 2245
MORRISTOWN NJ 07962-2245

MAILED

NOV 14 2011

OFFICE OF PETITIONS

In re Application of	:	
Li, et al.	:	
Application No. 11/784,697	:	DECISION ON PETITION
Filing Date: April 9, 2007	:	TO REVIVE
Attorney Docket No. H0014689-0760	:	

This is in response to the petition to revive under 37 CFR 1.137(b), filed November 2, 2011.

The petition under 37 CFR 1.137(b) is **GRANTED**.

The above application became abandoned for failure to timely file pay the issue fee in response to the Notice of Allowance, mailed May 20, 2011. This Notice set a statutory period for reply of three months. No issue fee having been received, the application became abandoned on August 21, 2011.

With the instant petition, applicants paid the petition fee, submitted the required reply in the form of the issue fee, and made the proper statement of unintentional delay.

The application is being forwarded to the Office of Data Management for processing into a patent.

Telephone inquiries concerning this decision may be directed to the undersigned at (571)272-3207.

Cliff Congo
Petitions Attorney
Office of Petitions

UNITED STATES PATENT AND TRADEMARK OFFICE

UNITED STATES DEPARTMENT OF COMMERCE
United States Patent and Trademark Office
Address: COMMISSIONER FOR PATENTS
P.O. Box 1450
Alexandria, Virginia 22313-1450
www.uspto.gov

APPLICATION NO.	FILING DATE	FIRST NAMED INVENTOR	ATTORNEY DOCKET NO.	CONFIRMATION NO.
11/784,725	04/09/2007	Eitan T. Wiener	END5747USDIV3	7662

27805 7590 10/08/2010
THOMPSON HINE L.L.P.
Intellectual Property Group
P.O. BOX 8801
DAYTON, OH 45401-8801

EXAMINER
SIMPSON, SARAH A

ART UNIT	PAPER NUMBER
3731	

MAIL DATE	DELIVERY MODE
10/08/2010	PAPER

Please find below and/or attached an Office communication concerning this application or proceeding.

The time period for reply, if any, is set in the attached communication.

UNITED STATES PATENT AND TRADEMARK OFFICE

Commissioner for Patents
United States Patent and Trademark Office
P.O. Box 1450
Alexandria, VA 22313-1450
www.uspto.gov

THOMPSON HINE L.L.P.
Intellectual Property Group
P.O. BOX 8801
DAYTON OH 45401-8801

In re Application of: WIENER, EITAN T. et al Serial No.: 11/784,725 Filed: April 9, 2007 Docket No.: END5747USDIV3 Title: MEDICAL ULTRASOUND SYSTEM AND HANDPIECE AND METHODS FOR MAKING AND TUNING	DECISION ON PETITION

This is a decision on the petition filed on October 4, 2010 by which petitioner requests the Director to review the examiner's Office action of August 4, 2010 and withdraw the restriction requirement based on constructive election. This petition is considered pursuant to 37 CFR 1.144 and 37 CFR 1.181, and no fee is required.

The petition is DISMISSED AS PREMATURE.

The record shows that:

In response to the non-final Office action of February 17, 2010, the applicant submitted a Rule 111 amendment on May 17, 2010. In the Rule 111 amendment, the applicant amended independent claim 51 and added additional new claims 75-80. On August 4, 2010, the examiner issued a final rejection and a restriction requirement between two inventions under MPEP § 806.05(j) by constructive election. The examiner held that the newly added claims 75-80 are directed to a new invention which is not originally presented. The applicant has received an action on the merits for the previously presented claims 51-55 and 66-74. Therefore, based on the constructive election under MPEP § 821.03, the applicant was held constructive elected those claims 51-55 and 66-74 directed to the elected invention. On October 10, 2010, the applicant responded with the current petition to review the restriction requirement of August 4, 2010. Petitioner argues that the restriction requirement was improperly issued.

Discussion and Analysis

A review of the record reveals that on August 4, 2010 the examiner issued a restriction requirement. In the restriction requirement, the examiner stated in the Office action that there are claims directed to two independent or distinct inventions under MPEP § 806.05(j). In the petition, petitioner disagrees with the examiner's restriction requirement for various reasons as stated in the petition. Since the examiner did not have a chance to answer the questions and arguments raised by the petitioner and repeat the restriction of the Office Action of August 4, 2010, the petition is hereby dismissed as premature in accordance with 37 CFR 1.181(c)[1] and (37 CFR 1.144[2]). Under the circumstances, the examiner is directed to fully answer the applicant's arguments in the petition and in the Rule 116 amendment filed on October 4, 2010.

Conclusion

For the reasons outlined above, petitioner's request to withdraw the restriction requirement is premature and cannot be granted. The examiner is directed to reconsider the restriction requirement of August 4, 2010 in light of the arguments presented in the petition of October 4, 2010.

The application is being forwarded to the examiner via the Supervisory Patent Examiner of Art Unit 3731 for reconsideration of the restriction requirement and consideration of the applicant's Rule 116 amendment filed on October 4, 2010. The mere filing of a petition will not stay any period for reply that may be running against the application, nor act as a stay of other proceedings. Any request for reconsideration of this decision must be submitted within TWO (2) MONTHS from the mail date of this decision, 37 CFR 1.181(f). No extension of time under 37 CFR 1.136(a) is permitted. The reconsideration request should include a cover letter entitled "Renewed Petition under 37 CFR 1.181".

Any inquiry regarding this decision should be directed to Henry Yuen, Special Programs Examiner, at (571) 272-4856.

The petition is DISMISSED AS PREMATURE.

Angela D. Sykes

Angela D. Sykes, Director
Technology Center 3700

---

[1] 37 CFR 1.181(c) When a petition is taken from an action or requirement of an examiner in the ex parte prosecution of an application, or in the ex parte or inter partes prosecution of a reexamination proceeding, it may be required that there have been a proper request for reconsideration (§ 1.111) and a repeated action by the examiner. The examiner may be directed by the Director to furnish a written statement, within a specified time, setting forth the reasons for his or her decision upon the matters averred in the petition, supplying a copy to the petitioner.

[2] § 1.144 Petition from requirement for restriction: After a final requirement for restriction, the applicant, in addition to making any reply due on the remainder of the action, may petition the Director to review the requirement. Petition may be deferred until after final action on or allowance of claims to the invention elected, but must be filed not later than appeal. A petition will not be considered if reconsideration of the requirement was not requested (see § 1.181).

UNITED STATES PATENT AND TRADEMARK OFFICE

UNITED STATES DEPARTMENT OF COMMERCE
United States Patent and Trademark Office
Address: COMMISSIONER FOR PATENTS
P.O. Box 1450
Alexandria, Virginia 22313-1450
www.uspto.gov

APPLICATION NO.	FILING DATE	FIRST NAMED INVENTOR	ATTORNEY DOCKET NO.	CONFIRMATION NO.
11/784,725	04/09/2007	Eitan T. Wiener	END5747USDIV3	7662

27805 7590 11/09/2010
THOMPSON HINE L.L.P.
Intellectual Property Group
P.O. BOX 8801
DAYTON, OH 45401-8801

EXAMINER
SIMPSON, SARAH A

ART UNIT	PAPER NUMBER
3731	

MAIL DATE	DELIVERY MODE
11/09/2010	PAPER

Please find below and/or attached an Office communication concerning this application or proceeding.

The time period for reply, if any, is set in the attached communication.

UNITED STATES PATENT AND TRADEMARK OFFICE

Commissioner for Patents
United States Patent and Trademark Office
P.O. Box 1450
Alexandria, VA 22313-1450
www.uspto.gov

THOMPSON HINE L.L.P.
Intellectual Property Group
P.O. BOX 8801
DAYTON OH 45401-8801

In re Application of:
WIENER, EITAN T. et al
Serial No. 11/784,725
Filed: April 9, 2007
Docket: END5747USDIV3
Title: MEDICAL ULTRASOUND SYSTEM AND HANDPIECE AND METHODS FOR MAKING AND TUNING

DECISION ON PETITION
UNDER 37 CFR § 1.181

This is a decision on the renewed petition filed on October 15, 2010 by which petitioner requests reconsideration of earlier decision and withdrawal of the restriction requirement mailed August 4, 2010, and that non-elected claims 75-80 be rejoined and examined on the merits. Claims 51-55, 66-69 and 71-74 were held to be constructively elected examined and newly added claims 75-80 were withdrawn from consideration due to non-elected invention. This petition is being considered pursuant to 37 CFR 1.144 and 37 CFR 1.181, and no fee is required.

The petition is granted.

After consulting with the examiner, the requested relief is granted. The restriction requirement mailed on August 4, 2010 is hereby withdrawn. Claims 75-80 will be rejoined with the elected invention as set forth in claims 51-55, 66-69 and 71-74. The examiner will issue an Office action to rejoin and treat the newly added non-elected claims 75-80 on the merits when considering the Rule 116 Amendment of October 4, 2010 in due course.

The application is being forwarded to the examiner via Supervisory Patent Examiner of Art Unit 3731 for further consideration of non-elected claims 75-80 and the Rule 116 Amendment prior to further appeal proceeding. Any inquiry regarding this decision should be directed to Henry C. Yuen, Special Programs Examiner, at (571) 272-4856.

PETITION GRANTED.

Angela D. Sykes

Angela D. Sykes, Director
Technology Center 3700

UNITED STATES PATENT AND TRADEMARK OFFICE

Commissioner for Patents
United States Patent and Trademark Office
P.O. Box 1450
Alexandria, VA 22313-1450
www.uspto.gov

MAILED

JAN 04 2011

OFFICE OF PETITIONS

JORDAN AND HAMBURG, LLP
122 EAST 42ND STREET
SUITE 4000
NEW YORK, NY 10168

In re Application of
Yuji Dohi
Application No. 11/784,811
Filed: April 10, 2007
Attorney Docket No. F-9419

ON PETITION

This is a decision on the petition filed July 13, 2010, under 37 CFR 1.137(a), to revive the above-identified application.

The petition under 37 CFR 1.137(a) is **dismissed as moot**, since the present petition is properly treated as a petition under 37 CFR 1.8, to withdraw the holding of abandonment.

This application was held abandoned for failure to timely respond to the Notice of Allowance and Fee(s) Due (Notice) mailed December 15, 2009, which set a three (3) months period for reply. Accordingly, a reply was due on or before March 16, 2010. A Notice of Abandonment was mailed on June 15, 2010.

Petitioner states that a reply was timely mailed via certificate of mailing on March 15, 2010, which included the following papers: Fee Transmittal, PTO Form 2038, and Deposit Account Authorization. Petitioner has submitted a copy of the previously mailed correspondence, which bears a certificate of mailing dated March 15, 2010, which would have rendered the reply timely if received.

The file record does not include the originally submitted papers. Failure to receive correspondence which includes a certificate of mailing or certificate of facsimile transmission is addressed in 37 CFR 1.8(b), reproduced below:

> In the event that correspondence is considered timely filed by being mailed or transmitted in accordance with paragraph (a) of this section, but not received in the U.S. Patent and Trademark Office after a reasonable amount of time has elapsed from the time of mailing or transmitting of the correspondence, or after the application is held to

be abandoned, or after the proceeding is dismissed, terminated, or decided with prejudice, the correspondence will be considered timely if the party who forwarded such correspondence:

(1) Informs the Office of the previous mailing or transmission of the correspondence promptly after becoming aware that the Office has no evidence of receipt of the correspondence;

(2) Supplies an additional copy of the previously mailed or transmitted correspondence and certificate; and

(3) Includes a statement which attests on a personal knowledge basis or to the satisfaction of the Director to the previous timely mailing or transmission. If the correspondence was sent by facsimile transmission, a copy of the sending unit's report confirming transmission may be used to support this statement.

The petition satisfies the above requirements of 37 CFR 1.8(b); therefore, the petition is hereby **granted**. Accordingly, the holding of abandonment is hereby withdrawn and the above application is restored to pending status.

The copy of the reply received with the petition will be accepted in place of the reply shown to have been mailed on March 15, 2010.

In view of this decision, the $270 petition fee is being credited back to petitioner's credit card, in due course.

This application file is being referred to the Office of Data Management for further processing into a patent.

Telephone inquiries concerning this decision should be directed to Andrea Smith at (571) 272-3226. Questions concerning the issuance of this application should be directed to the Office of Data Management at (571) 272-4200.

Andrea Smith
Petitions Examiner
Office of Petitions

David Bucci
Petitions Examiner

UNITED STATES PATENT AND TRADEMARK OFFICE

Commissioner for Patents
United States Patent and Trademark Office
P.O. Box 1450
Alexandria, VA 22313-1450
www.uspto.gov

MAILED
DEC 08 2010
OFFICE OF PETITIONS

ROBERT D SHEDD PATENT OPERATIONS
THOMSON LICENSING LLC
PO BOX 5312
PRINCETON NJ 08543-5312

In re Application of	:	
Jachalsky, et al.	:	
Application No: 11/784,817	:	ON PETITION
Filed: April 10, 2007	:	
Attorney Docket No. PD060034	:	

This is a decision on the petition to revive under 37 CFR 1.137(b), filed September 10, 2010.

The petition under 37 CFR 1.137(b) is **GRANTED**.

The above-identified application became abandoned for failure to timely file a reply in response to the non-final Office action, mailed July 30, 2009. This Office action set a shortened statutory period for reply of three (3) months. No reply having been received, the application became abandoned on October 31, 2010. The Office mailed a Notice of Abandonment on February 12, 2010.

With the instant petition, applicant made the proper statement of unintentional delay, paid the petition fee, and filed the required reply in the form of an Amendment.

The application is being forwarded to Group Art Unit 2186 for consideration of the Amendment, filed September 10, 2010.

Telephone inquiries related to this decision should be directed to the undersigned at (571)272-3207.

Cliff Congo
Petitions Attorney
Office of Petitions

SPE RESPONSE FOR CERTIFICATE OF CORRECTION

DATE : 10/26/10 Paper No.: —

TO SPE OF : ART UNIT 3781

SUBJECT : Request for Certificate of Correction for Appl. No.: 11/784873 Patent No.: 7780028 B2

Please respond to this request for a certificate of correction within 7 days.

FOR IFW FILES:

Please review the requested changes/corrections as shown in the **COCIN** document(s) in the IFW application image. No new matter should be introduced, nor should the scope or meaning of the claims be changed.

Please complete the response (see below) and forward the completed response to scanning using document code **COCX**.

FOR PAPER FILES:

Please review the requested changes/corrections as shown in the attached certificate of correction. Please complete this form (see below) and forward it with the file to:

Certificates of Correction Branch (CofC)
Randolph Square – 9D10-A
Palm Location 7580

Virginia Tolbert
Certificates of Correction Branch
571-272-0460

Thank You For Your Assistance

The request for issuing the above-identified correction(s) is hereby:
Note your decision on the appropriate box.

X ☒ **Approved** — All changes apply.

☐ **Approved in Part** — Specify below which changes **do not** apply.

☐ **Denied** — State the reasons for denial below.

Comments: _____

/Robert J Hicks/ Examiner 3781 11/9/10

UNITED STATES PATENT AND TRADEMARK OFFICE

Commissioner for Patents
United States Patent and Trademark Office
P.O. Box 1450
Alexandria, VA 22313-1450
www.uspto.gov

MAILED

AUG 09 2010

OFFICE OF PETITIONS

CHRISTIE, PARKER & HALE, LLP
PO BOX 7068
PASADENA CA 91109-7068

In re Application of	:	
Jon HOFFMAN et al.	:	
Application No. 11/784,850	:	DECISION ON PETITION
Filed: April 09, 2007	:	TO WITHDRAW
Attorney Docket No. **58922/M522**	:	FROM RECORD
	:	

This is a decision on the Request to Withdraw as attorney or agent of record under 37 C.F.R. § 1.36(b), filed June 11, 2010.

The request is **APPROVED**.

A grantable request to withdraw as attorney/agent of record must be signed by every attorney/agent seeking to withdraw or contain a clear indication that one attorney is signing on behalf of another/others. The Office requires the practitioner(s) requesting withdrawal to certify that he, she, or they have: (1) given reasonable notice to the client, prior to the expiration of the response period, that the practitioner(s) intends to withdraw from employment; (2) delivered to the client or a duly authorized representative of the client all papers and property (including funds) to which the client is entitled; and (3) notified the client of any responses that may be due and the time frame within which the client must respond, pursuant 37 CFR 10.40(c).

The request was signed by Edward Schwartz on behalf of all attorneys of record who are associated with customer No. 23363. All attorneys/agents associated with the Customer Number 23363 have been withdrawn. Applicant is reminded that there is no attorney of record at this time.

All future correspondence will be directed to the first named inventor Jon Hoffman at the address indicated below. There is an outstanding Office action mailed April 26, 2010 that requires a reply from the applicant.

Telephone inquiries concerning this decision should be directed to Tredelle Jackson at 571-272-2783.

/Tredelle D. Jackson/
Paralegal Specialist
Office of Petitions

cc: **JON HOFFMAN**
1807 LATIGO CANYON ROAD
MALIBU CA 90265

UNITED STATES PATENT AND TRADEMARK OFFICE

Commissioner for Patents
United States Patent and Trademark Office
P.O. Box 1450
Alexandria, VA 22313-1450
www.uspto.gov

FLASTER/GREENBERG P.C.
Four Penn Center
1600 John F. Kennedy Boulevard
2nd Floor
PHILADELPHIA PA 19103

MAILED
MAR 16 2012
OFFICE OF PETITIONS

In re Application of :
Burgo et al. :
Application No. 11/784,899 : ON PETITION
Filed: April 10, 2007 :
Attorney Docket No. I0113-53U1 :
For: HAIR CONDITIONING COSMETIC COMPOSITIONS CONTAINING A MIXTURE OF AMIDOAMINES

This is a decision on the petition under 37 CFR 1.137(b), filed February 10, 2012, to revive the above-identified application.

The petition is **GRANTED**.

This application became abandoned as a result of petitioners' failure to file an appropriate follow-up submission to the Notice of Appeal, filed June 15, 2011, within seven (7) months of the filing of the Notice of Appeal. A five month extension of time under the provisions of 37 CFR 1.136(a) and an amendment were filed on January 26, 2012 (certificate of mailing date January 17, 2012). As an appropriate follow-up submission was not filed within the extended time period for response, the appeal was dismissed and the proceedings as to the rejected claims were terminated. See 37 CFR 1.197(b). As no claim was allowed, the application became abandoned on January 17, 2012. *See* MPEP 1215.04. A Notice of Abandonment was mailed on February 14, 2012.

Applicants have submitted a proper reply in the form of an RCE and required $930.00 fee and a request to use an amendment previously filed on January 26, 2012 (certificate of mailing date January 17, 2012) as the submission, an acceptable statement of the unintentional nature of the delay in filing a follow-up submission to the Notice of Appeal, and the $1,860.00 petition fee.

The statement of unintentional delay presented in the petition does not comply with the current rule. 37 CFR 1.137(b)(3) requires a statement that "the entire delay in filing the required reply from the due date for the reply until the filing of a grantable petition pursuant to 37 CFR 1.137(b) was unintentional" be submitted. However, the statement presented will be accepted and construed as meaning that "the entire delay in filing the required reply from the due date for

the reply until the filing of a grantable petition pursuant to 37 CFR 1.137(b) was unintentional." If this is an incorrect interpretation in view of the rules, practitioner is required to provide a statement to that effect.

After the mailing of this decision the application will be forwarded to Technology Center AU 1615 for processing of the RCE, filed February 10, 2012, and for appropriate action by the Examiner in the normal course of business on the amendment, previously submitted on January 26, 2012 (certificate of mailing date January 17, 2012).

Telephone inquiries pertaining to this decision may be directed to the undersigned at (571) 272-3230.

Shirene Willis Brantley

Shirene Willis Brantley
Senior Petitions Attorney
Office of Petitions

SPE RESPONSE FOR CERTIFICATE OF CORRECTION

DATE : February 8, 2012

TO SPE OF : ART UNIT 1726
SUBJECT : Request for Certificate of Correction for Appl. No.: 11/784941 , Patent No.: 7887974

Co f C mailroom date: 2-25-12

Please respond to this request for a certificate of correction within 7 days.

FOR IFW FILES:

Please review the requested changes/corrections as shown in the **COCIN** document(s) in the IFW application image. No new matter should be introduced, nor should the scope or meaning of the claims be changed.

Please complete the response (see below) and forward the completed response to scanning using document code **COCX**.

FOR PAPER FILES:

Please review the requested changes/corrections as shown in the attached certificate of correction. Please complete this form (see below) and forward it with the file to:

Certificates of Correction Branch (CofC)
Randolph Square – 9D10-A
Palm Location 7580

Note: _____

_____

Magdalene Talley
Certificates of Correction Branch

571-272-0423 _____

Thank You For Your Assistance

The request for issuing the above-identified correction(s) is hereby:
Note your decision on the appropriate box.

- [x] **Approved** — **All** changes apply.
- [ ] **Approved in Part** — Specify below which changes **do not** apply.
- [ ] **Denied** — State the reasons for denial below.

Comments: _____

_____

_____

_____

_____

SPE 1726 **Art Unit**

UNITED STATES PATENT AND TRADEMARK OFFICE

Commissioner for Patents
United States Patent and Trademark Office
P.O. Box 1450
Alexandria, VA 22313-1450
www.uspto.gov

STANDLEY LAW GROUP LLP
6300 Riverside Drive
Dublin OH 43017

MAILED

FEB 14 2011

OFFICE OF PETITIONS

In re Application of	:	
Suresh Pillai et al.	:	
Application No. 12/785,197	:	DECISION ON PETITION
Filed: May 21, 2010	:	TO WITHDRAW
Attorney Docket No. PIL 1556-002B	:	FROM RECORD
	:	

This is a decision on the renewed Request to Withdraw as attorney or agent of record under 37 C.F.R. § 1.36(b), filed January 31, 2011.

The request is **APPROVED**.

A grantable request to withdraw as attorney/agent of record must be signed by every attorney/agent seeking to withdraw or contain a clear indication that one attorney is signing on behalf of another/others. A request to withdraw will not be approved unless at least 30 (thirty) days would remain between the date of approval and the later of the expiration date of a time to file a response or the expiration date of the maximum time period which can be extended under 37 C.F.R. § 1.136(a).

The request was signed by Carol G. Stosky on behalf of all attorneys/agents associated with customer number 08698. All attorneys/agents associated with customer number 08698 have been withdrawn.

The correspondence address has been changed and is copied below.

Telephone inquiries concerning this decision should be directed to Kimberly Inabinet at 571-272-4618.

/Kimberly Inabinet/

Kimberly Inabinet
Petitions Examiner
Office of Petitions

cc: Suresh Pillai
1120 Sherborne Lane
Powell, OH 43065

UNITED STATES PATENT AND TRADEMARK OFFICE

UNITED STATES DEPARTMENT OF COMMERCE
United States Patent and Trademark Office
Address: COMMISSIONER FOR PATENTS
P.O. Box 1450
Alexandria, Virginia 22313-1450
www.uspto.gov

APPLICATION NUMBER	FILING OR 371(C) DATE	FIRST NAMED APPLICANT	ATTY. DOCKET NO./TITLE
12/785,197	05/21/2010	Suresh Pillai	PIL 1556-002B

CONFIRMATION NO. 1378

POWER OF ATTORNEY NOTICE

8698
STANDLEY LAW GROUP LLP
6300 Riverside Drive
Dublin, OH 43017

OC000000046001209

Date Mailed: 02/14/2011

NOTICE REGARDING CHANGE OF POWER OF ATTORNEY

This is in response to the Power of Attorney filed 01/31/2011.

- The withdrawal as attorney in this application has been accepted. Future correspondence will be mailed to the new address of record. 37 CFR 1.33.

/kainabinet/

Office of Data Management, Application Assistance Unit (571) 272-4000, or (571) 272-4200, or 1-888-786-0101

UNITED STATES PATENT AND TRADEMARK OFFICE

Commissioner for Patents
United States Patent and Trademark Office
P.O. Box 1450
Alexandria, VA 22313-1450
www.uspto.gov

OLIFF & BERRIDGE, PLC
P.O. BOX 320850
ALEXANDRIA VA 22320-4850

MAILED
APR 08 2011
OFFICE OF PETITIONS

In re Application of	:	
Nicholas C. Pashley	:	
Application No. 11/785,229	:	DECISION ON PETITION
Filed: April 16, 2007	:	TO WITHDRAW
Attorney Docket No. **131988**	:	FROM RECORD
	:	

This is a decision on the Request to Withdraw as attorney or agent of record under 37 CFR § 1.36(b), filed February 15, 2011.

The request is **NOT APPROVED**.

A review of the file record indicates that Liam J. McDowell does not have power of attorney in the above-identified application. Accordingly, the request to withdraw under 37 CFR § 1.36(b) is not applicable.

All future communications from the Office will continue to be directed to the above-listed address until otherwise notified by applicant.

Telephone inquires concerning this decision should be directed to the undersigned at 571-272-4584.

JoAnne Burke
Petitions Examiner
Office of Petitions

UNITED STATES PATENT AND TRADEMARK OFFICE

Commissioner for Patents
United States Patent and Trademark Office
P.O. Box 1450
Alexandria, VA 22313-1450
www.uspto.gov

Paper No.

JOHN MATTHEW HIGGINSON
276 JOHN ST
PETERBOROUGH ON
K9J 5E9
CANADA

MAILED

JUN 27 2011

OFFICE OF PETITIONS

In re Application of	:	
JOHN MATTHEW HIGGINSON	:	DECISION ON PETITION
Application No. 11/785,272	:	
Filed: April 17, 2007	:	
Atty Docket No. 116-003	:	

This is a decision on the PETITION FOR REVIVAL OF AN APPLICATION FOR PATENT ABANDONED UNINTENTIONALLY UNDER 37 CFR 1.137(b) filed May 20, 2011.

The petition is **GRANTED**.

On October 5, 2007, a non-final Office action was mailed in the above-identified application. This Office action set a shortened statutory period for reply of three (3) months, with extensions of time obtainable under § 1.136(a). A reply was filed on January 7, 2008. However, the reply was determined to be non-compliant. See Notice mailed April 3, 2008. A further amendment was filed on July 1, 2008. However, this amendment was unsigned. See Notice mailed August 5, 2008. No proper reply timely filed and no extension of time obtained, the application became abandoned. A courtesy Notice of Abandonment was mailed on March 3, 2009.

The petition includes the required reply in the form of an amendment, the required statement of unintentional delay and payment of the petition fee set forth in 37 CFR § 1.17(m). No terminal disclaimer is required.

The instant application has been abandoned for an extended period of time. The Office is relying on petitioner's duty of good faith and candor in accepting the assertion that the entire

delay in filing the required reply was unintentional. See 37 CFR 10.18.

All requirements of 37 CFR 1.137(b) have been met.

Technology Center AU 3617 has been advised of this decision. The application is, thereby, forwarded to the examiner for consideration of the amendment submitted on petition filed May 20, 2011.

Telephone inquiries specific to this decision should be directed to the undersigned at (571) 272-3219.

Nancy Johnson
Senior Petitions Attorney
Office of Petitions

UNITED STATES PATENT AND TRADEMARK OFFICE

Commissioner for Patents
United States Patent and Trademark Office
P.O. Box 1450
Alexandria, VA 22313-1450
www.uspto.gov

NIXON & VANDERHYE, PC
901 NORTH GLEBE ROAD, 11TH FLOOR
ARLINGTON VA 22203

MAILED

AUG 30 2010

OFFICE OF PETITIONS

In re Application of	:	
Minoru SHIBASAKI et al.	:	
Application No. 11/785,312	:	NOTICE UNDER 37 CFR. 1.28(c)
Filed: April 17, 2007	:	
Attorney Docket No. 249-465 (AMK)	:	

This is a notice regarding your request for acceptance of a fee deficiency submission under 37 CFR 1.28.

The Office no longer investigates or rejects original or reissue applications under 37 CFR 1.56. **1098 Off. Gaz. Pat. Office 502 (January 3, 1989)**. Therefore, nothing in this Notice is intended to imply that an investigation was done.

Your fee deficiency submission under 37 CFR 1.28 is hereby **ACCEPTED**.

This application is no longer entitled to small entity status. Accordingly, all future fees paid in this application must be paid at the large entity rate.

Inquiries related to this communication should be directed to Michelle R. Eason at (571) 272-4231.

Thurman K. Page
Petitions Examiner
Office of Petitions

UNITED STATES PATENT AND TRADEMARK OFFICE

Commissioner for Patents
United States Patent and Trademark Office
P.O. Box 1450
Alexandria, VA 22313-1450
www.uspto.gov

MCDERMOTT WILL & EMERY LLP
600 13TH STREET, NW
WASHINGTON, DC 20005-3096

MAILED

FEB 03 2011

OFFICE OF PETITIONS

In re Application of	:	
Yasuharu TANAKA, et *al.*	:	
Application No. 11/785,414	:	DECISION GRANTING PETITION
Filed: April 17, 2007	:	UNDER 37 CFR 1.313(c)(2)
Attorney Docket No. **079195-0054**	:	

This is a decision on the petition under 37 CFR 1.313(c)(2), filed February 2, 2011, to withdraw the above-identified application from issue after payment of the issue fee.

The petition is **GRANTED**.

The above-identified application is withdrawn from issue for consideration of a submission under 37 CFR 1.114 (request for continued examination). *See* 37 CFR 1.313(c)(2).

Petitioner is advised that the issue fee paid on December 30, 2010 cannot be refunded. If, however, this application is again allowed, petitioner may request that it be applied towards the issue fee required by the new Notice of Allowance.[1]

Telephone inquiries should be directed to the undersigned at (571) 272-7253.

This application is being referred to Technology Center AU 2628 for processing of the request for continued examination under 37 CFR 1.114 and for consideration of the concurrently filed information disclosure statement.

/Monica A. Graves/
Petitions Examiner, Office of Petitions

---

[1] *The request to apply the issue fee to the new Notice may be satisfied by completing and returning the new Part B – Fee(s) Transmittal Form (along with any balance due at the time of submission). Petitioner is advised that the Issue Fee Transmittal Form must be completed and timely submitted to avoid abandonment of the application.*

SPE RESPONSE FOR CERTIFICATE OF CORRECTION

Paper No.:20110616

DATE : June 16, 2011

TO SPE OF : ART UNIT 3663

SUBJECT : Request for Certificate of Correction on Patent No.:

A response is requested with respect to the accompanying request for a certificate of correction.

Please complete this form and return with file, within **7** days to:
Certificates of Correction Branch - ST (South Tower) 9A22
Palm location **7590** - Tel. No. (703) 305-8309

With respect to the change(s) requested, correcting Office and/or Applicant's errors, should the patent read as shown in the certificate of correction? No new matter should be introduced, nor should the scope or meaning of the claims be changed.

Thank You For Your Assistance **Certificates of Correction Branch**

The request for issuing the above-identified correction(s) is hereby:

Note your decision on the appropriated box.

☒ **Approved** All changes apply.

☐ **Approved in Part** Specify below which changes **do not** apply.

☐ **Denied** State the reasons for denial below.

Comments:

/JACK KEITH/
Supervisory Patent Examiner.Art Unit 3663

UNITED STATES PATENT AND TRADEMARK OFFICE

Commissioner for Patents
United States Patent and Trademark Office
P.O. Box 1450
Alexandria, VA 22313-1450
www.uspto.gov

LOUIS WOO
LAW OFFICE OF LEWIS WOO
717 NORTH FAYETTE STREET
ALEXANDRIA, VA 22314

MAILED

SEP 13 2010

OFFICE OF PETITIONS

In re Application of	:	
David MACLEAN et al	:	
Application No. 11/785,504	:	RESPONSE TO PETITION
Filed: April 18, 2007	:	
Attorney Docket No. 0100/0200	:	

This is a response to the petition under 37 CFR 1.182, which is being treated as a 37 CFR 1.59(b), filed March 4, 2010, to expunge information from the above identified application.

The petition is **DISMISSED**.

Petitioner requests that a document filed, be expunged from the record. The petitioner has identified the material to be expunged in the instant application no. 11/785,504 as being a declaration and appendixes filed March 4, 2010. The required fee under 37 CFR 1.17(g) has been received.

However, the petition is premature since prosecution of the application has not been closed by way of the allowance of the application, the mailing of an Ex parte Quayle action, or the abandonment of the application. See MPEP 724.06. Accordingly, it is not appropriate to make a final determination of whether or not the material requested to be expunged is "material," with "materiality" being defined as any information which the examiner considers as being important to a determination of patentability of the claims. Thus, the decision on the petition to expunge must be dismissed at this time.

During prosecution on the merits, the examiner will determine whether or not the identified document is considered to be "material." If the information is not considered by the examiner to be material and the conditions related to the expungement of unintentionally submitted information, discussed as A-F in MPEP 724.05 II, are satisfied, the information will be removed from the official file.

After the mailing of a Notice of Allowance, an Ex parte Quayle action or a Notice of Abandonment, the petition to expunge may be renewed by applicant(s) or applicant(s)' representative. No further fee is required for such a second submission of a petition under 37

CFR 1.59 to expunge information. **In addition, the requester is cautioned to renew the petition under 37 CFR 1.59 for reconsideration by the Office prior to the point at which the present file, or file claiming priority to the present file, is forwarded for issuance of the patent. This is to be done no later than immediately after the examiner has issued a Notice of Allowance, an Ex parte Quayle action or a Notice of Abandonment. A failure to timely renew the petition to expunge prior to the point at which the file is forwarded for issuance will result in the material being retained in the patented file and thus becoming open to the public.**

Telephone inquiries concerning this communication should be directed to the undersigned at 571-272-0602.

Thurman K. Page

Thurman K. Page
Petitions Examiner
Office of Petitions

UNITED STATES PATENT AND TRADEMARK OFFICE

Commissioner for Patents
United States Patent and Trademark Office
P.O. Box 1450
Alexandria, VA 22313-1450
www.uspto.gov

Date Mailed : October 29, 2010

Patent No. :7755558
Inventor :Hozumi Euda et al.
Patent Issued :July 13, 2010
Title :ATTENNA COIL

Re: Request for Certificate of Correction

Consideration has been given your request for the issuance of a certificate of correction for the above-identified patent under the provisions of Rule(s) 1.322.

As a result of applicants failure to fully comply with 35 U.S.C. 119 in that conditional requirements were not met concerning the inclusion of Foreign Application Priority Data; approval is herewith unwarranted unless a petition is granted. Applicant's attention is directed to MPEP 201.14(a), 37 CFR 1.17(i). Any petition should be directed to the attention of the Assistant Commissioner for patents using the following mailing address or FAX number.

By Mail: Commissioner of Patents and Trademarks
Box 1450
Alexandria, VA 22313-1450

By Fax: (703) 308-6916
Attn.: Office of Petitions

EFS web uspto.gov/ebc/index.html
(must be registered as an e-filer to submit responses)

Any telephone inquiry concerning this communication should be directed to Ms. A. Green at (703) 756-1541.

Mary Diggs, Supervisor
Decisions & Certificates
of Correction Branch
(703) 756-1580 or (703) 756-1541

Richard V. Burgujian
Finnegan, Henderson, Farabow,
Garrett & Dunner, L.L.P.
901 New York Avenue, N.W.
Washington, DC 20001-4413

/arg

SPE RESPONSE FOR CERTIFICATE OF CORRECTION

Paper No.: _____

DATE : 02-26-11

TO SPE OF : ART UNIT 2821

SUBJECT : Request for Certificate of Correction for Appl. No.: 11/785510 Patent No.: 7755558

CofC mailroom date: 02-14-11

Please respond to this request for a certificate of correction within 7 days.

FOR IFW FILES:

Please review the requested changes/corrections as shown in the **COCIN** document(s) in the IFW application image. No new matter should be introduced, nor should the scope or meaning of the claims be changed.

Please complete the response (see below) and forward the completed response to scanning using document code **COCX**.

FOR PAPER FILES:

Please review the requested changes/corrections as shown in the attached certificate of correction. Please complete this form (see below) and forward it with the file to:

Certificates of Correction Branch (CofC)
Randolph Square – 9D10-A
Palm Location 7580

Angela Green
Certificates of Correction Branch
(703) 756-1541

Thank You For Your Assistance

The request for issuing the above-identified correction(s) is hereby:
Note your decision on the appropriate box.

- ☒ **Approved** — **All** changes apply.
- ☐ **Approved in Part** — Specify below which changes **do not** apply.
- ☐ **Denied** — State the reasons for denial below.

Comments: The foreign application priority data requested to be rectified matches the data provided in the record of the subject application.

Chen Shih-Chao 03/07/2011

SPE **Art Unit** 2821

Chen, Shih-Chao

From: Choi, Jacob
Sent: Saturday, March 05, 2011 10:59 AM
To: Chen, Shih-Chao
Subject: FW: FW 11785510 7755558

David, have you completed the task? Please keep me updated & have a great weekend!

Jacob Y. Choi
Supervisory Patent Examiner / Art Unit 2821 (Class 315 & 343)

From: Green, Angela
Sent: Saturday, February 26, 2011 9:21 AM
To: Owens, Douglas; Choi, Jacob; Chen, Shih-Chao
Subject: FW 11785510 7755558

Please respond to Req. for correction ASAP. The Application file has been sent to SPE's/Examiner's Mailbox today. The PTOL-306 has been forwarded for scanning today.

Once decision has been made on PTOL-306 and forwarded to scanning, a return message in Edan/Madras with comment stating "Response has been forwarded for scanning" is very much welcomed and appreciated.

Office of Data Management
Certificate of Corrections Branch
Angela.Green@uspto.gov
Randolph Square 9C62-C
703-756-1541

AGreen
Pubs Conf
Decision

UNITED STATES PATENT AND TRADEMARK OFFICE

Commissioner for Patents
United States Patent and Trademark Office
P.O. Box 1450
Alexandria, VA 22313-1450
www.uspto.gov

KRATZ, QUINTOS & HANSON, LLP
1420 K Street, N.W.
4th Floor
WASHINGTON DC 20005

MAILED
NOV 08 2011
OFFICE OF PETITIONS

In re Application of :
Nakatani et al. :
Application No. 11/785,569 :
Filed: April 18, 2007 :
Attorney Docket No. 031054RI :
For: REFRIGERATION CYCLE APPARATUS

ON PETITION

This is a decision on the petition under 37 CFR 1.181, filed October 28, 2011, requesting that the Office withdraw the holding of abandonment of the above-identified application.

The petition under 37 CFR 1.181 is **GRANTED**.

This application was held abandoned for failure to respond in a timely manner to the final Office action, mailed March 22, 2011, which set forth an extendable three (3) month period for reply. The Office contended that this application became abandoned on Jun 23, 2011 for failure to timely reply to the March 22, 2011 final Office action. A Notice of Abandonment was mailed on October 24, 2011.

Petitioners request withdrawal of the holding of abandonment based on the assertion that a reply was timely filed on June 1, 2011. The undersigned finds this argument completely convincing, as a reply, filed June 1, 2011, is present in the application file. Therefore, the reply was filed within the three month period set for response.

The petition under 37 CFR 1.181 is **granted**, the holding of abandonment is withdrawn, and the October 24, 2011 Notice of Abandonment is **vacated**. No petition fee has been or will be charged in connection with this matter.

The application file will be forwarded to Technology Center A.U. 3744 for the examiner's consideration of the reply to the March 22, 2011 final Office action, which was timely filed on June 1, 2011.

Telephone inquiries pertaining to this matter may be directed to the undersigned at (571) 272-3230.

Shirene Willis Brantley
Senior Petitions Attorney
Office of Petitions

UNITED STATES PATENT AND TRADEMARK OFFICE

Commissioner for Patents
United States Patent and Trademark Office
P.O. Box 1450
Alexandria, VA 22313-1450
www.uspto.gov

MAILED
MAY 24 2011
OFFICE OF PETITIONS

BLANK ROME LLP
WATERGATE
600 NEW HAMPSHIRE AVENUE, N.W.
WASHINGTON DC 20037

In re Patent No. 7,561,763	: DECISION GRANTING PETITION
Issue Date: July 14, 2009	: UNDER 37 CFR 1.78(a)(3) AND
Application No. 11/785,627	: REQUEST FOR CERTIFICATE OF
Filed: April 19, 2007	: CORRECTION
Attorney Docket No. 124315.0490	:

This is a decision on the petition, filed December 4, 2009, which is being treated as a petition under 37 CFR 1.78(a)(3), seeking to add a claim for priority under 35 U.S.C. § 120 to nonprovisional Application No. 10/881,248, filed June 30, 2005, by way of a certificate of correction.

The petition is **granted**.

A review of the file record fails to disclose that a claim for the benefit of priority to the above-noted, prior-filed nonprovisional application was made within the time period set forth in 37 CFR 1.78(a)(2)(ii) and further failed to include a proper reference to the prior-filed application as required by 37 CFR 1.78(a)(2)(i) and 1.78(a)(2)(iii).

The instant application was filed April 19, 2007. Therefore, since this application was filed after November 29, 2000, a petition under 37 CFR 1.78(a)(3), along with submission of a Certificate of Correction, is the appropriate avenue of relief to accept a late claim for the benefit of priority to a prior-filed nonprovisional application after issuance of the application into a patent. *See* MPEP 1481.

A petition for acceptance of a claim for late priority under 37 CFR 1.78(a)(3) must be accompanied by:

(1) the reference required by 35 U.S.C. § 120 and 37 CFR 1.78(a)(2)(i) of the prior-filed application, unless previously submitted;
(2) the surcharge set forth in § 1.17(t); and
(3) a statement that the entire delay between the date the claim was due under 37 CFR 1.78(a)(2)(ii) and the date the claim was filed was unintentional. The Director may

require additional information where there is a question whether the delay was unintentional.

As the petition for acceptance of an unintentionally delayed claim for the benefit of priority under 35 U.S.C. § 120 to the above-noted, prior-filed nonprovisional application satisfies the conditions of 37 CFR 1.78(a)(3), the petition is granted.

A corrected Filing Receipt, which includes the priority claim to the above-noted, prior-filed nonprovisional application, accompanies this decision on petition.

Petitioner is advised that the granting of this petition and the mailing of a corrected Filing Receipt should not be viewed as an indication that a determination has been made that this application is entitled to claim benefit of the prior-filed application. A determination that applicant is entitled to claim benefit of the prior-filed application will be made by the Examiner prior to the mailing of a certificate of correction.

As authorized, the $1,410 surcharge fee, as well as the $100 certificate of correction fee, will be charged to petitioner's Deposit Account.

Any inquiries concerning this decision may be directed to Carl Friedman at (571) 272-6842.

This application is being referred to the Certificates of Correction Branch for processing the request for a certificate of correction in accordance with this decision on the petition under 37 CFR 1.78(a)(3).

Carl Friedman
Petitions Examiner
Office of Petitions

ATTACHMENT: Corrected Filing Receipt

UNITED STATES PATENT AND TRADEMARK OFFICE

UNITED STATES DEPARTMENT OF COMMERCE
United States Patent and Trademark Office
Address: COMMISSIONER FOR PATENTS
P.O. Box 1450
Alexandria, Virginia 22313-1450
www.uspto.gov

APPLICATION NUMBER	FILING or 371(c) DATE	GRP ART UNIT	FIL FEE REC'D	ATTY.DOCKET.NO	TOT CLAIMS	IND CLAIMS
11/785,627	04/19/2007	2883	1550	124315.0490	25	2

CONFIRMATION NO. 4897

CORRECTED FILING RECEIPT

27557
BLANK ROME LLP
WATERGATE
600 NEW HAMPSHIRE AVENUE, N.W.
WASHINGTON, DC 20037

OC000000047843318

Date Mailed: 05/24/2011

Receipt is acknowledged of this non-provisional patent application. The application will be taken up for examination in due course. Applicant will be notified as to the results of the examination. Any correspondence concerning the application must include the following identification information: the U.S. APPLICATION NUMBER, FILING DATE, NAME OF APPLICANT, and TITLE OF INVENTION. Fees transmitted by check or draft are subject to collection. Please verify the accuracy of the data presented on this receipt. **If an error is noted on this Filing Receipt, please submit a written request for a Filing Receipt Correction. Please provide a copy of this Filing Receipt with the changes noted thereon. If you received a "Notice to File Missing Parts" for this application, please submit any corrections to this Filing Receipt with your reply to the Notice. When the USPTO processes the reply to the Notice, the USPTO will generate another Filing Receipt incorporating the requested corrections**

Applicant(s)

Sepehr Kiani, Watertown, MA;
John A. Lehman, Bedford, NH;

Power of Attorney: The patent practitioners associated with Customer Number 23628

Domestic Priority data as claimed by applicant

This application is a DIV of 10/881,248 06/30/2004 PAT 7,213,974

Foreign Applications (You may be eligible to benefit from the **Patent Prosecution Highway** program at the USPTO. Please see http://www.uspto.gov for more information.)

If Required, Foreign Filing License Granted: 05/14/2007

The country code and number of your priority application, to be used for filing abroad under the Paris Convention, is **US 11/785,627**

Projected Publication Date: Not Applicable

Non-Publication Request: No

Early Publication Request: No

set forth in 37 CFR 5.15. The scope and limitations of this license are set forth in 37 CFR 5.15(a) unless an earlier license has been issued under 37 CFR 5.15(b). The license is subject to revocation upon written notification. The date indicated is the effective date of the license, unless an earlier license of similar scope has been granted under 37 CFR 5.13 or 5.14.

This license is to be retained by the licensee and may be used at any time on or after the effective date thereof unless it is revoked. This license is automatically transferred to any related applications(s) filed under 37 CFR 1.53(d). This license is not retroactive.

The grant of a license does not in any way lessen the responsibility of a licensee for the security of the subject matter as imposed by any Government contract or the provisions of existing laws relating to espionage and the national security or the export of technical data. Licensees should apprise themselves of current regulations especially with respect to certain countries, of other agencies, particularly the Office of Defense Trade Controls, Department of State (with respect to Arms, Munitions and Implements of War (22 CFR 121-128)); the Bureau of Industry and Security, Department of Commerce (15 CFR parts 730-774); the Office of Foreign AssetsControl, Department of Treasury (31 CFR Parts 500+) and the Department of Energy.

NOT GRANTED

No license under 35 U.S.C. 184 has been granted at this time, if the phrase "IF REQUIRED, FOREIGN FILING LICENSE GRANTED" DOES NOT appear on this form. Applicant may still petition for a license under 37 CFR 5.12, if a license is desired before the expiration of 6 months from the filing date of the application. If 6 months has lapsed from the filing date of this application and the licensee has not received any indication of a secrecy order under 35 U.S.C. 181, the licensee may foreign file the application pursuant to 37 CFR 5.15(b).

Title

CONNECTOR SYSTEM FOR OPTICAL WAVE GUIDES

Preliminary Class

385

PROTECTING YOUR INVENTION OUTSIDE THE UNITED STATES

Since the rights granted by a U.S. patent extend only throughout the territory of the United States and have no effect in a foreign country, an inventor who wishes patent protection in another country must apply for a patent in a specific country or in regional patent offices. Applicants may wish to consider the filing of an international application under the Patent Cooperation Treaty (PCT). An international (PCT) application generally has the same effect as a regular national patent application in each PCT-member country. The PCT process **simplifies** the filing of patent applications on the same invention in member countries, but **does not result** in a grant of "an international patent" and does not eliminate the need of applicants to file additional documents and fees in countries where patent protection is desired.

Almost every country has its own patent law, and a person desiring a patent in a particular country must make an application for patent in that country in accordance with its particular laws. Since the laws of many countries differ in various respects from the patent law of the United States, applicants are advised to seek guidance from specific foreign countries to ensure that patent rights are not lost prematurely.

Applicants also are advised that in the case of inventions made in the United States, the Director of the USPTO must issue a license before applicants can apply for a patent in a foreign country. The filing of a U.S. patent application serves as a request for a foreign filing license. The application's filing receipt contains further information and guidance as to the status of applicant's license for foreign filing.

Applicants may wish to consult the USPTO booklet, "General Information Concerning Patents" (specifically, the section entitled "Treaties and Foreign Patents") for more information on timeframes and deadlines for filing foreign patent applications. The guide is available either by contacting the USPTO Contact Center at 800-786-9199, or it can be viewed on the USPTO website at http://www.uspto.gov/web/offices/pac/doc/general/index.html.

For information on preventing theft of your intellectual property (patents, trademarks and copyrights), you may wish to consult the U.S. Government website, http://www.stopfakes.gov. Part of a Department of Commerce initiative, this website includes self-help "toolkits" giving innovators guidance on how to protect intellectual property in specific countries such as China, Korea and Mexico. For questions regarding patent enforcement issues, applicants may call the U.S. Government hotline at 1-866-999-HALT (1-866-999-4158).

LICENSE FOR FOREIGN FILING UNDER

Title 35, United States Code, Section 184

Title 37, Code of Federal Regulations, 5.11 & 5.15

GRANTED

The applicant has been granted a license under 35 U.S.C. 184, if the phrase "IF REQUIRED, FOREIGN FILING LICENSE GRANTED" followed by a date appears on this form. Such licenses are issued in all applications where the conditions for issuance of a license have been met, regardless of whether or not a license may be required as

UNITED STATES PATENT AND TRADEMARK OFFICE

Commissioner for Patents
United States Patent and Trademark Office
P.O. Box 1450
Alexandria, VA 22313-1450
www.uspto.gov

OLIFF & BERRIDGE, PLC
P.O. BOX 320850
ALEXANDRIA, VA 22320-4850

MAILED
MAR 10 2011
OFFICE OF PETITIONS

In re Application of
Akimitsu EBIHARA
Application No. 11/785,716
Filed: April 19, 2007
Attorney Docket No. **125767.04**

DECISION GRANTING PETITION
UNDER 37 CFR 1.313(c)(2)

This is a decision on the petition under 37 CFR 1.313(c)(2), filed March 10, 2011, to withdraw the above-identified application from issue after payment of the issue fee.

The petition is **GRANTED**.

The above-identified application is withdrawn from issue for consideration of a submission under 37 CFR 1.114 (request for continued examination). *See* 37 CFR 1.313(c)(2).

Petitioner is advised that the issue fee paid on January 20, 2011 cannot be refunded. If, however, this application is again allowed, petitioner may request that it be applied towards the issue fee required by the new Notice of Allowance.[1]

Telephone inquiries should be directed to the undersigned at (571) 272-7253.

This application is being referred to Technology Center AU 2882 for processing of the request for continued examination under 37 CFR 1.114 and for consideration of the concurrently filed information disclosure statement.

/Monica A. Graves/
Petitions Examiner, Office of Petitions

[1] *The request to apply the issue fee to the new Notice may be satisfied by completing and returning the new Part B – Fee(s) Transmittal Form (along with any balance due at the time of submission). Petitioner is advised that the Issue Fee Transmittal Form* ***must*** *be completed and timely submitted to avoid abandonment of the application.*

UNITED STATES PATENT AND TRADEMARK OFFICE

Commissioner for Patents
United States Patent and Trademark Office
P.O. Box 1450
Alexandria, VA 22313-1450
www.uspto.gov

Decision Date : June 15,2011

In re Application of :

Akimitsu Ebihara

DECISION ON PETITION

UNDER CFR 1.313(c)(2)

Application No : 11785716

Filed : 19-Apr-2007

Attorney Docket No : 125767.04

This is an electronic decision on the petition under 37 CFR 1.313(c)(2), filed June 15,2011 , to withdraw the above-identified application from issue after payment of the issue fee.

The petition is **GRANTED.**

The above-identified application is withdrawn from issue for consideration of a submission under 37 CFR 1.114 (request for continued examination). See 37 CFR 1.313(c)(2).

Petitioner is advised that the issue fee paid in this application cannot be refunded. If, however, this application is again allowed, petitioner may request that it be applied towards the issue fee required by the new Notice of Allowance.

Telephone inquiries concerning this decision should be directed to the Patent Electronic Business Center (EBC) at 866-217-9197.

This application file is being referred to Technology Center AU 2882 for processing of the request for continuing examination under 37 CFR 1.114 .

Office of Petitions

Doc Code: PET.AUTO Document Description: Petition automatically granted by EFS-Web	PTO/SB/140 U.S. Patent and Trademark Office Department of Commerce

Electronic Petition Request	**PETITION TO WITHDRAW AN APPLICATION FROM ISSUE AFTER PAYMENT OF THE ISSUE FEE UNDER 37 CFR 1.313(c)**
Application Number	11785716
Filing Date	19-Apr-2007
First Named Inventor	Akimitsu Ebihara
Art Unit	2882
Examiner Name	HUNG NGUYEN
Attorney Docket Number	125767.04
Title	EXPOSURE APPARATUS, AND DEVICE MANUFACTURING METHOD

An application may be withdrawn from issue for further action upon petition by the applicant. To request that the Office withdraw an application from issue, applicant must file a petition under this section including the fee set forth in § 1.17(h) and a showing of good and sufficient reasons why withdrawal of the application from issue is necessary.

APPLICANT HEREBY PETITIONS TO WITHDRAW THIS APPLICATION FROM ISSUE UNDER 37 CFR 1.313(c).

A grantable petition requires the following items:
(1) Petition fee; and
(2) One of the following reasons:
(a) Unpatentability of one or more claims, which must be accompanied by an unequivocal statement that one or more claims are unpatentable, an amendment to such claim or claims, and an explanation as to how the amendment causes such claim or claims to be patentable;
(b) Consideration of a request for continued examination in compliance with § 1.114 (for a utility or plant application only); or
(c) Express abandonment of the application. Such express abandonment may be in favor of a continuing application, but not a CPA under 37 CFR 1.53(d).

Petition Fee

☐ Applicant claims SMALL ENTITY status. See 37 CFR 1.27.

☐ Applicant is no longer claiming SMALL ENTITY status. See 37 CFR 1.27(g)(2).

☐ Applicant(s) status remains as SMALL ENTITY.

☒ Applicant(s) status remains as other than SMALL ENTITY

Reason for withdrawal from issue

○ One or more claims are unpatentable

◉ Consideration of a request for continued examination (RCE) (List of Required Documents and Fees)

○ Applicant hereby expressly abandons the instant application (any attorney/agent signing for this reason must have power of attorney pursuant to 37 CFR 1.32(b)).

RCE request,submission, and fee.

☐ I certify, in accordance with 37 CFR 1.4(d)(4) that : The RCE request ,submission, and fee have already been filed in the above-identified application on

☒ Are attached.

THIS PORTION MUST BE COMPLETED BY THE SIGNATORY OR SIGNATORIES

I certify, in accordance with 37 CFR 1.4(d)(4) that I am:

◉ An attorney or agent registered to practice before the Patent and Trademark Office who has been given power of attorney in this application.

○ An attorney or agent registered to practice before the Patent and Trademark Office, acting in a representative capacity.

○ A sole inventor

○ A joint inventor; I certify that I am authorized to sign this submission on behalf of all of the inventors

○ A joint inventor; all of whom are signing this e-petition

○ The assignee of record of the entire interest that has properly made itself of record pursuant to 37 CFR 3.71

Signature	/Mario Costantino/
Name	Mario A. Costantino
Registration Number	33565

Doc Code: PET.AUTO Document Description: Petition automatically granted by EFS-Web	PTO/SB/140 U.S. Patent and Trademark Office Department of Commerce

Electronic Petition Request	**PETITION TO WITHDRAW AN APPLICATION FROM ISSUE AFTER PAYMENT OF THE ISSUE FEE UNDER 37 CFR 1.313(c)**
Application Number	11785723
Filing Date	19-Apr-2007
First Named Inventor	Kazuki Watanabe
Art Unit	2817
Examiner Name	RYAN JOHNSON
Attorney Docket Number	XA-10788
Title	SEMICONDUCTOR INTEGRATED CIRCUIT AND NON-CONTACT ELECTRONIC DEVICE USING THE SAME

An application may be withdrawn from issue for further action upon petition by the applicant. To request that the Office withdraw an application from issue, applicant must file a petition under this section including the fee set forth in § 1.17(h) and a showing of good and sufficient reasons why withdrawal of the application from issue is necessary.

APPLICANT HEREBY PETITIONS TO WITHDRAW THIS APPLICATION FROM ISSUE UNDER 37 CFR 1.313(c).

A grantable petition requires the following items:
(1) Petition fee; and
(2) One of the following reasons:
(a) Unpatentability of one or more claims, which must be accompanied by an unequivocal statement that one or more claims are unpatentable, an amendment to such claim or claims, and an explanation as to how the amendment causes such claim or claims to be patentable;
(b) Consideration of a request for continued examination in compliance with § 1.114 (for a utility or plant application only); or
(c) Express abandonment of the application. Such express abandonment may be in favor of a continuing application, but not a CPA under 37 CFR 1.53(d).

Petition Fee

☐ Applicant claims SMALL ENTITY status. See 37 CFR 1.27.

☐ Applicant is no longer claiming SMALL ENTITY status. See 37 CFR 1.27(g)(2).

☐ Applicant(s) status remains as SMALL ENTITY.

☒ Applicant(s) status remains as other than SMALL ENTITY

Reason for withdrawal from issue

○ One or more claims are unpatentable

◉ Consideration of a request for continued examination (RCE) (List of Required Documents and Fees)

○ Applicant hereby expressly abandons the instant application (any attorney/agent signing for this reason must have power of attorney pursuant to 37 CFR 1.32(b)).

RCE request,submission, and fee.

☐ I certify, in accordance with 37 CFR 1.4(d)(4) that : The RCE request ,submission, and fee have already been filed in the above-identified application on

☒ Are attached.

THIS PORTION MUST BE COMPLETED BY THE SIGNATORY OR SIGNATORIES

I certify, in accordance with 37 CFR 1.4(d)(4) that I am:

◉ An attorney or agent registered to practice before the Patent and Trademark Office who has been given power of attorney in this application.

○ An attorney or agent registered to practice before the Patent and Trademark Office, acting in a representative capacity.

○ A sole inventor

○ A joint inventor; I certify that I am authorized to sign this submission on behalf of all of the inventors

○ A joint inventor; all of whom are signing this e-petition

○ The assignee of record of the entire interest that has properly made itself of record pursuant to 37 CFR 3.71

Signature	/Eric G. King/
Name	Eric G. King
Registration Number	42736

UNITED STATES PATENT AND TRADEMARK OFFICE

Commissioner for Patents
United States Patent and Trademark Office
P.O. Box 1450
Alexandria, VA 22313-1450
www.uspto.gov

Decision Date : July 28,2011

In re Application of :

Kazuki Watanabe

DECISION ON PETITION

UNDER CFR 1.313(c)(2)

Application No : 11785723

Filed : 19-Apr-2007

Attorney Docket No : XA-10788

This is an electronic decision on the petition under 37 CFR 1.313(c)(2), filed July 28,2011 , to withdraw the above-identified application from issue after payment of the issue fee.

The petition is **GRANTED.**

The above-identified application is withdrawn from issue for consideration of a submission under 37 CFR 1.114 (request for continued examination). See 37 CFR 1.313(c)(2).

Petitioner is advised that the issue fee paid in this application cannot be refunded. If, however, this application is again allowed, petitioner may request that it be applied towards the issue fee required by the new Notice of Allowance.

Telephone inquiries concerning this decision should be directed to the Patent Electronic Business Center (EBC) at 866-217-9197.

This application file is being referred to Technology Center AU 2817 for processing of the request for continuing examination under 37 CFR 1.114 .

Office of Petitions

UNITED STATES PATENT AND TRADEMARK OFFICE

Commissioner for Patents
United States Patent and Trademark Office
P.O. Box 1450
Alexandria, VA 22313-1450
www.uspto.gov

Paper No.

MCGINN INTELLECTUAL PROPERTY LAW GROUP, PLLC
8321 OLD COURTHOUSE ROAD
SUITE 200
VIENNA VA 22182-3817

MAILED
AUG 12 2011
OFFICE OF PETITIONS

In re Application of	:	
Onuma et al.	:	
Application No. 11/785,726	:	DECISION ON PETITION
Filed: April 19, 2007	:	PURSUANT TO
Attorney Docket No. H64-230298/MNN	:	37 C.F.R. § 1.181(A)
Title: CORONA WIRE CARTRIDGE, CORONA DISCHARGER, AND IMAGE FORMING APPARATUS USING THE CORONA DISCHARGER	:	

This is a decision on the petition pursuant to 37 C.F.R. § 1.181, filed on July 18, 2011.

Receipt of the concurrently submitted amendment is acknowledged.

BACKGROUND

The above-identified application became abandoned for failure to reply in a timely manner to the non-final Office action, mailed November 17, 2010, which set a shortened statutory period for reply of three months. No response was received, and no extensions of time under the provisions of 37 C.F.R. § 1.136(a) were requested. Accordingly, the above-identified application became abandoned on February 18, 2011.

RELEVANT PORTION OF THE C.F.R.

37 C.F.R. § 1.8(b) sets forth, *in toto*:

> (b) In the event that correspondence is considered timely filed by being mailed or transmitted in accordance with paragraph (a) of this section, but not received in the U.S. Patent and Trademark Office after a reasonable amount of time has elapsed from the time of mailing or transmitting of the correspondence,

> or after the application is held to be abandoned, or after the proceeding is dismissed, terminated, or decided with prejudice, the correspondence will be considered timely if the party who forwarded such correspondence:
>
> (1) Informs the Office of the previous mailing or transmission of the correspondence promptly after becoming aware that the Office has no evidence of receipt of the correspondence;
>
> (2) Supplies an additional copy of the previously mailed or transmitted correspondence and certificate; and
>
> (3) Includes a statement which attests on a personal knowledge basis or to the satisfaction of the Director to the previous timely mailing or transmission. If the correspondence was sent by facsimile transmission, a copy of the sending unit's report confirming transmission may be used to support this statement.

ANALYSIS

With this petition, Petitioner has alleged that a response was timely filed on February 17, 2011. Petitioner has further included a copy of this response (an amendment to the claims and remarks), and it is noted that it contains a "certificate of facsimile transmission," executed by Petitioner and dated February 17, 2011.

Considering the facts and circumstances of the delay at issue, as set forth on petition, it is concluded that Petitioner has met his burden of establishing that a response was timely submitted, pursuant to 37 C.F.R. § 1.8.

Accordingly, the petition pursuant to 37 C.F.R. § 1.181(a) is **GRANTED**. The holding of abandonment is **WITHDRAWN**.

The Technology Center will be notified of this decision, and jurisdiction over this application is transferred to the Technology Center, so that the application may receive further processing. The Technology Center's support staff will notify the Examiner of this decision, so that the amendment that was received on July 18, 2011 (originally presented on February 17, 2011) can receive further processing in due course.

Petitioner may find it beneficial to view Private PAIR within a fortnight of the present decision to ensure that the withdrawal of the holding of abandonment has been acknowledged by the Technology Center in response to this decision. It is noted that all inquiries with regard to any failure of that change in status should be directed to the Technology Center where that change of status must be effected - **the Office of Petitions cannot effectuate a change of status.**

Telephone inquiries regarding *this decision* should be directed to the undersigned at (571) 272-3225.[1] All other inquiries concerning examination procedures or status of the application should be directed to the Technology Center.

/Paul Shanoski/
Paul Shanoski
Senior Attorney
Office of Petitions

---

1 Petitioner will note that all practice before the Office should be in writing, and the action of the Office will be based exclusively on the written record in the Office. See 37 C.F.R. § 1.2. As such, Petitioner is reminded that no telephone discussion may be controlling or considered authority for Petitioner's further action(s).

Doc Code: PET.AUTO Document Description: Petition automatically granted by EFS-Web	PTO/SB/140 U.S. Patent and Trademark Office Department of Commerce

Electronic Petition Request	**PETITION TO WITHDRAW AN APPLICATION FROM ISSUE AFTER PAYMENT OF THE ISSUE FEE UNDER 37 CFR 1.313(c)**
Application Number	11785744
Filing Date	19-Apr-2007
First Named Inventor	Vadim Banine
Art Unit	2882
Examiner Name	COLIN KREUTZER
Attorney Docket Number	081468-0360900
Title	PELLICLE, LITHOGRAPHIC APPARATUS AND DEVICE MANUFACTURING METHOD

An application may be withdrawn from issue for further action upon petition by the applicant. To request that the Office withdraw an application from issue, applicant must file a petition under this section including the fee set forth in § 1.17(h) and a showing of good and sufficient reasons why withdrawal of the application from issue is necessary.

APPLICANT HEREBY PETITIONS TO WITHDRAW THIS APPLICATION FROM ISSUE UNDER 37 CFR 1.313(c).

A grantable petition requires the following items:
(1) Petition fee; and
(2) One of the following reasons:
(a) Unpatentability of one or more claims, which must be accompanied by an unequivocal statement that one or more claims are unpatentable, an amendment to such claim or claims, and an explanation as to how the amendment causes such claim or claims to be patentable;
(b) Consideration of a request for continued examination in compliance with § 1.114 (for a utility or plant application only); or
(c) Express abandonment of the application. Such express abandonment may be in favor of a continuing application, but not a CPA under 37 CFR 1.53(d).

Petition Fee

- ☐ Applicant claims SMALL ENTITY status. See 37 CFR 1.27.
- ☐ Applicant is no longer claiming SMALL ENTITY status. See 37 CFR 1.27(g)(2).
- ☐ Applicant(s) status remains as SMALL ENTITY.
- ☒ Applicant(s) status remains as other than SMALL ENTITY

Reason for withdrawal from issue

○ One or more claims are unpatentable

◉ Consideration of a request for continued examination (RCE) (List of Required Documents and Fees)

○ Applicant hereby expressly abandons the instant application (any attorney/agent signing for this reason must have power of attorney pursuant to 37 CFR 1.32(b)).

RCE request,submission, and fee.

☐ I certify, in accordance with 37 CFR 1.4(d)(4) that : The RCE request ,submission, and fee have already been filed in the above-identified application on

☒ Are attached.

THIS PORTION MUST BE COMPLETED BY THE SIGNATORY OR SIGNATORIES

I certify, in accordance with 37 CFR 1.4(d)(4) that I am:

◉ An attorney or agent registered to practice before the Patent and Trademark Office who has been given power of attorney in this application.

○ An attorney or agent registered to practice before the Patent and Trademark Office, acting in a representative capacity.

○ A sole inventor

○ A joint inventor; I certify that I am authorized to sign this submission on behalf of all of the inventors

○ A joint inventor; all of whom are signing this e-petition

○ The assignee of record of the entire interest that has properly made itself of record pursuant to 37 CFR 3.71

Signature	/Emily T. Bell/
Name	Emily T. Bell
Registration Number	47418

UNITED STATES PATENT AND TRADEMARK OFFICE

Commissioner for Patents
United States Patent and Trademark Office
P.O. Box 1450
Alexandria, VA 22313-1450
www.uspto.gov

Decision Date : May 23,2011

In re Application of :

Vadim Banine

DECISION ON PETITION

UNDER CFR 1.313(c)(2)

Application No : 11785744

Filed : 19-Apr-2007

Attorney Docket No : 081468-0360900

This is an electronic decision on the petition under 37 CFR 1.313(c)(2), filed May 23,2011 , to withdraw the above-identified application from issue after payment of the issue fee.

The petition is **GRANTED.**

The above-identified application is withdrawn from issue for consideration of a submission under 37 CFR 1.114 (request for continued examination). See 37 CFR 1.313(c)(2).

Petitioner is advised that the issue fee paid in this application cannot be refunded. If, however, this application is again allowed, petitioner may request that it be applied towards the issue fee required by the new Notice of Allowance.

Telephone inquiries concerning this decision should be directed to the Patent Electronic Business Center (EBC) at 866-217-9197.

This application file is being referred to Technology Center AU 2882 for processing of the request for continuing examination under 37 CFR 1.114 .

Office of Petitions

UNITED STATES PATENT AND TRADEMARK OFFICE

Commissioner for Patents
United States Patent and Trademark Office
P.O. Box 1450
Alexandria, VA 22313-1450
www.uspto.gov

MATTINGLY & MALUR, PC
1800 DIAGONAL ROAD
SUITE 370
ALEXANDRIA VA 22314

MAILED

JUN 15 2011

OFFICE OF PETITIONS

In re Application of :
Yagisawa, et al. :
Application No. 11/785,780 : DECISION ON PETITION
Filed: 20 April, 2007 :
Attorney Docket No. 500.42704CX7 :

This is a decision on the petition filed on 26 May, 2011, pursuant to 37 C.F.R §1.182 requesting authorization to withdraw the two terminal disclaimers filed 6 November, 2007.

NOTE:

Petitioner seeks to reopen the question of the propriety of the double patenting rejection that prompted the filing of terminal disclaimers—historically, such requests have not been favorably considered. (*See*: MPEP §1490.)

Petitioner now must present an Interview Summary provided by the Examiner evidencing that Petitioner has satisfied the objections raised by the Examiner to the withdrawal of the terminal disclaimers in question.

As of this writing, there has been no response of concurrence from the Patent Legal Research Center in this matter. Thus, after the requirement to evidence the Examiner's concurrence has been satisfied, Petitioner also must ensure that the subsequent concurrence of the Patent Legal Research Center can be obtained.

The petition pursuant to 37 C.F.R §1.182 is **DISMISSED**.

The guidance in the Commentary at MPEP §1490 provides in pertinent part:

***

VII. WITHDRAWING A RECORDED TERMINAL DISCLAIMER

If timely requested, a recorded terminal disclaimer may be withdrawn before the application in which it is filed issues as a patent, or in a reexamination proceeding, before

the reexamination certificate issues. After a patent or reexamination certificate issues, it is unlikely that a recorded terminal disclaimer will be nullified.

A. Before Issuance Of Patent

While the filing and recordation of an unnecessary terminal disclaimer has been characterized as an "unhappy circumstance" in *In re Jentoft*, 392 F.2d 633, 157 USPQ 363 (CCPA 1968), there is no statutory prohibition against nullifying or otherwise canceling the effect of a recorded terminal disclaimer which was erroneously filed before the patent issues. *>Because< the terminal disclaimer would not take effect until the patent is granted, and the public has not had the opportunity to rely on the terminal disclaimer, relief from this unhappy circumstance may be available by way of petition or by refiling the application (other than by refiling it as a CPA).

Under appropriate circumstances, consistent with the orderly administration of the examination process, the nullification of a recorded terminal disclaimer may be addressed by filing a petition under 37 CFR §1.182 requesting withdrawal of the recorded terminal disclaimer. Petitions seeking to reopen the question of the propriety of the double patenting rejection that prompted the filing of the terminal disclaimer have not been favorably considered. The filing of a continuing application other than a CPA, while abandoning the application in which the terminal disclaimer has been filed, will typically nullify the effect of a terminal disclaimer. The filing of a Request for Continued Examination (RCE) of an application under 37 CFR §1.114 will not nullify the effect of a terminal disclaimer, *>because< a new application has not been filed, but rather prosecution has been continued in the existing application. (Emphasis supplied.)

***

It appears that Petitioner well may have determined for purposes of prosecution strategy to submit the terminal disclaimer notwithstanding Petitioner's own beliefs that the disclaimer was unnecessary.

Thus, Petitioner appears to have made choices deemed to provide to him a prosecution road to allowance, and the Office will not indiscriminately alter those choices.

Accordingly, the petition is **dismissed**.

This application is released to the IFW Files Repository.

While telephone inquiries regarding this decision may be directed to the undersigned at (571) 272-3214, it is noted that all practice before the Office is in writing (see: 37 C.F.R. §1.2[1]) and the proper authority for action on any matter in this regard are the statutes (35 U.S.C.), regulations (37 C.F.R.) and the commentary on policy (MPEP). Therefore, no telephone discussion may be controlling or considered authority for Petitioner's/Caller's action(s).

/ John J. Gillon, Jr./
John J. Gillon, Jr.
Senior Attorney
Office of Petitions

[1] The regulations at 37 C.F.R. §1.2 provide:
§1.2 Business to be transacted in writing.
All business with the Patent and Trademark Office should be transacted in writing.The personal attendance of applicants or their attorneys or agents at the Patent and Trademark Office is unnecessary. The action of the Patent and Trademark Office will be based exclusively on the written record in the Office. No attention will be paid to any alleged oral promise, stipulation,or understanding in relation to which there is disagreement or doubt.

UNITED STATES PATENT AND TRADEMARK OFFICE

Commissioner for Patents
United States Patent and Trademark Office
P.O. Box 1450
Alexandria, VA 22313-1450
www.uspto.gov

MATTINGLY & MALUR, PC
1800 DIAGONAL ROAD
SUITE 370
ALEXANDRIA VA 22314

MAILED
JUL 18 2011
OFFICE OF PETITIONS

In re Application of
Yagisawa, et al.
Application No. 11/785,780
Filed: 20 April, 2007
Attorney Docket No. 500.42704CX7

DECISION ON PETITION

This is a decision on the petition filed on 13 July, 2011, pursuant to 37 C.F.R §1.182 requesting authorization to withdraw the two terminal disclaimers filed 6 November, 2007, in favor of the terminal disclaimer filed 26 May, 2011, and approved on 16 June, 2011.

The petition pursuant to 37 C.F.R §1.182 is **GRANTED**.

The guidance in the Commentary at MPEP §1490 provides in pertinent part:

***

VII. WITHDRAWING A RECORDED TERMINAL DISCLAIMER

If timely requested, a recorded terminal disclaimer may be withdrawn before the application in which it is filed issues as a patent, or in a reexamination proceeding, before the reexamination certificate issues. After a patent or reexamination certificate issues, it is unlikely that a recorded terminal disclaimer will be nullified.

A. Before Issuance Of Patent

While the filing and recordation of an unnecessary terminal disclaimer has been characterized as an "unhappy circumstance" in *In re Jentoft*, 392 F.2d 633, 157 USPQ 363 (CCPA 1968), there is no statutory prohibition against nullifying or otherwise canceling the effect of a recorded terminal disclaimer which was erroneously filed before the patent issues. *>Because< the terminal disclaimer would not take effect until the patent is granted, and the public has not had the opportunity to rely on the terminal disclaimer, relief from this unhappy circumstance may be available by way of petition or by refiling the application (other than by refiling it as a CPA).

Under appropriate circumstances, consistent with the orderly administration of the examination process, the nullification of a recorded terminal disclaimer may be addressed

> by filing a petition under 37 CFR §1.182 requesting withdrawal of the recorded terminal disclaimer. Petitions seeking to reopen the question of the propriety of the double patenting rejection that prompted the filing of the terminal disclaimer have not been favorably considered. The filing of a continuing application other than a CPA, while abandoning the application in which the terminal disclaimer has been filed, will typically nullify the effect of a terminal disclaimer. The filing of a Request for Continued Examination (RCE) of an application under 37 CFR §1.114 will not nullify the effect of a terminal disclaimer, *>because< a new application has not been filed, but rather prosecution has been continued in the existing application. (Emphasis supplied.)
>
> ***

It appears that:

- Petitioner obtained on 8 July, 2011, the concurrence of the Examiner in the instant matter; and
- a substitute TD was filed on 26 May, 2011, and approved on 16 June 20011.

Accordingly, the petition is **granted**.

This application is released to the IFW Files Repository.

While telephone inquiries regarding this decision may be directed to the undersigned at (571) 272-3214, it is noted that all practice before the Office is in writing (see: 37 C.F.R. §1.2[1]) and the proper authority for action on any matter in this regard are the statutes (35 U.S.C.), regulations (37 C.F.R.) and the commentary on policy (MPEP). Therefore, no telephone discussion may be controlling or considered authority for Petitioner's/Caller's action(s).

/ John J. Gillon, Jr./
John J. Gillon, Jr.
Senior Attorney
Office of Petitions

---

[1] The regulations at 37 C.F.R. §1.2 provide:
§1.2 Business to be transacted in writing.
All business with the Patent and Trademark Office should be transacted in writing.The personal attendance of applicants or their attorneys or agents at the Patent and Trademark Office is unnecessary. The action of the Patent and Trademark Office will be based exclusively on the written record in the Office. No attention will be paid to any alleged oral promise, stipulation,or understanding in relation to which there is disagreement or doubt.

UNITED STATES PATENT AND TRADEMARK OFFICE

Commissioner for Patents
United States Patent and Trademark Office
P.O. Box 1450
Alexandria, VA 22313-1450
www.uspto.gov

Fujitsu Patent Center
Fujitsu Management Services of America, Inc.
2318 Mill Road, Suite 1010
Alexandria VA 22314

MAILED

SEP 24 2010

OFFICE OF PETITIONS

In re Application of

Ogawa, et al.

Application No. 11/785,793

Filed: April 20, 2007

Attorney Docket No. 06-40837

DECISION ON PETITION

This is a decision on the petition under 37 CFR §1.137(b), filed September 2, 2010, to revive the above-identified application.

The petition is **granted**.

This application became abandoned for failure to timely remit the issue fee of $1510.00 and publication fee of $300.00 as required by the Notice of Allowance and Issue Fee Due (the "Notice") mailed June 1, 2010. The Notice set forth a three (3) month statutory period for reply. No response was received within the allowable period. Accordingly, this application became abandoned on September 2, 2010. A Notice of Abandonment was mailed on September 10, 2010.

The issue fee and publication fee were received on September 2, 2010.

Form PTOL-85B, filed September 2, 2010, is noted and made of record.

The application is being directed to the Office of Data Management for further processing.

Telephone inquiries concerning this decision may be directed to the undersigned at (571) 272-3222.

/Kenya A. McLaughlin/

Kenya A. McLaughlin
Petitions Attorney
Office of Petitions

UNITED STATES PATENT AND TRADEMARK OFFICE

Commissioner for Patents
United States Patent and Trademark Office
P.O. Box 1450
Alexandria, VA 22313-1450
www.uspto.gov

Peter N. Lalos
STEVENS, DAVIS, MILLER & MOSHER, LLP
Suite 850
1615 L Street, NW
Washington DC 20036

MAILED

FEB 01 2011

OFFICE OF PETITIONS

In re Application of
Odendall
Application No. 11/785,830
Filed: April 30, 2007
Docket No. PNL21613 // 8369.052.US0000
For: METHOD FOR CHECKING THE FRICTION CAPABILITY OF AN EXHAUST GAS CATALYTIC CONVERTER

ON PETITION

This is a decision on the petition captioned, "Petition to Revive Abandoned Application," filed December 9, 2010. The petition will be treated under 37 CFR 1.181, as a request for withdrawal of the holding of abandonment in the above-identified application.

The petition under 37 CFR 1.181 is **DISMISSED**.

Any further reconsideration petition must be submitted within TWO (2) MONTHS from the mail date of this decision. Extensions of time under 37 CFR 1.136(a) are permitted. This is **not** final agency action within the meaning of 5 U.S.C. § 704.

The above-identified application became abandoned for failure to submit a reply to the April 27, 2010 non-final Office action, which set an extendable three month period for reply. The Office considered this application abandoned on July 28, 2010.

Petitioner asserts that the April 27, 2010 non-final Office action was not received by practitioner because the failure of the USPTO to enter a change of correspondence address, filed on april 29, 2008, resulted in the April 27, 2010 non-final Office action being directed to an out-of-date address. Therefore, petitioner requests withdrawal of the holding of abandonment.

37 CFR 1.33(a)(2) provides that if a § 1.63 oath or declaration has been filed, or is filed concurrent with the filing of an application, by any of the inventors, the correspondence address may be changed by the parties set forth in paragraph (b) of this section, except for paragraph (b)(2).

37 CFR 1.33(b)(2) states, in pertinent part, that amendments and other papers, except for written assertions pursuant to § 1.27(c)(2)(ii) of this part, filed in the application must be signed by:

... (2) A patent practitioner not of record who acts in a representative capacity under the provisions of § 1.34;

As stated in MPEP Section 601.03 Change of Correspondence Address: Under 37 CFR 1.33(a)(2), where an executed oath or declaration under 37 CFR 1.63 has been filed by any of the inventors, the correspondence address may be changed by (A) a patent practitioner of record, (B) an assignee as provided for under 37 CFR 3.71(b), or (C) all of the applicants (37 CFR 1.41(b)) for patent, unless there is an assignee of the entire interest and such assignee has taken action in the application in accordance with 37 CFR 3.71. See 37 CFR1.33(a)(2).

In the instant case, an executed declaration, which designated the current correspondence address of record, was filed on July 18, 2007. Attorney Lalos was not empowered in this document.

The Office received a change of correspondence address signed Attorney Lalos on April 29, 2008. However, since he is not a practitioner of record in the application, the change of correspondence address was not entered. As explained above, pursuant to 37 CFR 1.33(a)(2), a patent practitioner not of record who acts in a representative capacity under the provisions of § 1.34 may not change the correspondence address after an executed declaration has been filed.

Therefore, the Office was not in error when it refused to enter the April 29, 2008 change of correspondence address and the April 27, 2010 non-final Office action was properly mailed to the correspondence address of record. The petition to withdraw the holding of abandonment due to non-receipt is dismissed.

A change of address should be filed in accordance with MPEP 601.03. A courtesy copy of this decision is being mailed to the address given on the petition; however, the Office will mail all future correspondence solely to the address of record.

Petitioner is strongly encouraged to file a petition to revive under the unintentional standard of 137(b). The filing of a petition under 37 CFR 1.137(b) cannot be intentionally delayed and therefore must be filed promptly. A person seeking revival due to unintentional delay cannot make a statement that the delay was unintentional unless the entire delay, including the date it was discovered that the application was abandoned until the filing of the petition to revive under 37 CFR 1.137(b), was unintentional. A statement that the delay was unintentional is not appropriate if petitioner intentionally delayed the filing of a petition for revival under 37 CFR 1.137(b).

Further correspondence with respect to this matter should be addressed as follows:

By mail:

Mail Stop PETITION
Commissioner for Patents
Post Office Box 1450
Alexandria, VA 22313-1450

By hand: U.S. Patent and Trademark Office
Customer Service Window, Mail Stop Petition
Randolph Building
401 Dulany Street
Alexandria, VA 22314

By FAX: (571) 273-8300 - ATTN: Office of Petitions

By internet: EFS-Web
www.uspto.gov/ebc/efs_help.html
(for help using EFS-Web call the
Patent Electronic Business Center
at (866) 217-9197)

Telephone inquiries may be directed to the undersigned at (571) 272-3230.

Shirene Willis Brantley
Senior Petitions Attorney
Office of Petitions

CC: Peter N. Lalos
Novak Druce + Quigg LLP
1300 Eye Street, NW
Suite 1000, West Tower
Washington, DC 20005

UNITED STATES PATENT AND TRADEMARK OFFICE

Commissioner for Patents
United States Patent and Trademark Office
P.O. Box 1450
Alexandria, VA 22313-1450
www.uspto.gov

Novak Druce & Quigg LLP
300 New Jersey Ave, NW
Fifth Floor
Washington DC 20001

MAILED
MAY 04 2011
OFFICE OF PETITIONS

In re Application of
Odendall
Application No. 11/785,830
Filed: April 30, 2007
Docket No. PNL21613 // 8369.052.US0000
For: METHOD FOR CHECKING THE FRICTION CAPABILITY OF AN EXHAUST GAS CATALYTIC CONVERTER

ON PETITION

This is a decision on the petition under 37 CFR 1.137(b), filed March 10, 2011.

The petition under 37 CFR 1.137(b) is **GRANTED**.

The above-identified application became abandoned on July 28, 2010 for failure to timely submit a reply to the April 27, 2010 non-final Office action, which set an extendable three month period for reply.

Applicant has submitted an amendment in reply to the April 27, 2010 non-final Office action, an acceptable statement of the unintentional nature of the delay in responding to the April 27, 2010 non-final Office action, and the $1,620.00 petition fee. All of the requirements under 37 CFR 1.137(b) being met, the petition is granted.

After the mailing of this decision, the application will be returned to Technology Center AU 3748 for consideration of the amendment filed on December 9, 2010.

Telephone inquiries may be directed to the undersigned at (571) 272-3230.

Shirene Willis Brantley
Senior Petitions Attorney
Office of Petitions

UNITED STATES PATENT AND TRADEMARK OFFICE

Commissioner for Patents
United States Patent and Trademark Office
P.O. Box 1450
Alexandria, VA 22313-1450
www.uspto.gov

MAILED

OCT 21 2010

OFFICE OF PETITIONS

OLIFF & BERRIDGE, PLC
P.O. BOX 320850
ALEXANDRIA VA 22320-4850

In re Application of	:	
Yuichi Shibazaki	:	
Application No. 11/785,860	:	DECISION GRANTING PETITION
Filed: April 20, 2007	:	UNDER 37 CFR 1.313(c)(2)
Attorney Docket No. 127874.01	:	

This is a decision on the petition under 37 CFR 1.313(c)(2), filed October 21, 2010, to withdraw the above-identified application from issue after payment of the issue fee.

The petition is **GRANTED**.

The above-identified application is withdrawn from issue for consideration of a submission under 37 CFR 1.114 (request for continued examination). *See* 37 CFR 1.313(c)(2).

Petitioner is advised that the issue fee paid on October 12, 2010 cannot be refunded. If, however, this application is again allowed, petitioner may request that it be applied towards the issue fee required by the new Notice of Allowance.[1]

Telephone inquiries should be directed to the undersigned at (571) 272-3208.

This application is being referred to Technology Center AU 2882 for processing of the request for continued examination under 37 CFR 1.114 and for consideration of the concurrently filed IDS.

/Karen Creasy/
Karen Creasy
Petitions Examiner
Office of Petitions

---

[1] *The request to apply the issue fee to the new Notice may be satisfied by completing and returning the new Part B – Fee(s) Transmittal Form (along with any balance due at the time of submission). Petitioner is advised that the Issue Fee Transmittal Form must be completed and timely submitted to avoid abandonment of the application.*

UNITED STATES PATENT AND TRADEMARK OFFICE

Commissioner for Patents
United States Patent and Trademark Office
P.O. Box 1450
Alexandria, VA 22313-1450
www.uspto.gov

OLIFF & BERRIDGE, PLC
P.O. BOX 320850
ALEXANDRIA VA 22320-4850

MAILED

MAR 17 2011

OFFICE OF PETITIONS

In re Application of	:	
Yuichi Shibazaki	:	
Application No. 11/785,860	:	DECISION GRANTING PETITION
Filed: April 20, 2007	:	UNDER 37 CFR 1.313(c)(2)
Attorney Docket No. 127874.01	:	

This is a decision on the petition under 37 CFR 1.313(c)(2), filed March 16, 2011, to withdraw the above-identified application from issue after payment of the issue fee.

The petition is **GRANTED**.

The above-identified application is withdrawn from issue for consideration of a submission under 37 CFR 1.114 (request for continued examination). *See* 37 CFR 1.313(c)(2).

Petitioner is advised that the issue fee paid on February 1, 2011 cannot be refunded. If, however, this application is again allowed, petitioner may request that it be applied towards the issue fee required by the new Notice of Allowance.[1]

Telephone inquiries should be directed to the undersigned at (571) 272-3208.

This application is being referred to Technology Center AU 2882 for processing of the request for continued examination under 37 CFR 1.114 and for consideration of the concurrently filed IDS.

/Karen Creasy/
Karen Creasy
Petitions Examiner
Office of Petitions

[1] *The request to apply the issue fee to the new Notice may be satisfied by completing and returning the new Part B – Fee(s) Transmittal Form (along with any balance due at the time of submission). Petitioner is advised that the Issue Fee Transmittal Form* ***must*** *be completed and timely submitted to avoid abandonment of the application.*

UNITED STATES PATENT AND TRADEMARK OFFICE

Commissioner for Patents
United States Patent and Trademark Office
P.O. Box 1450
Alexandria, VA 22313-1450
www.uspto.gov

Decision Date : June 15,2011

In re Application of :

Yuichi Shibazaki

DECISION ON PETITION

UNDER CFR 1.313(c)(2)

Application No : 11785860

Filed : 20-Apr-2007

Attorney Docket No : 127874.01

This is an electronic decision on the petition under 37 CFR 1.313(c)(2), filed June 15,2011 , to withdraw the above-identified application from issue after payment of the issue fee.

The petition is **GRANTED.**

The above-identified application is withdrawn from issue for consideration of a submission under 37 CFR 1.114 (request for continued examination). See 37 CFR 1.313(c)(2).

Petitioner is advised that the issue fee paid in this application cannot be refunded. If, however, this application is again allowed, petitioner may request that it be applied towards the issue fee required by the new Notice of Allowance.

Telephone inquiries concerning this decision should be directed to the Patent Electronic Business Center (EBC) at 866-217-9197.

This application file is being referred to Technology Center AU 2882 for processing of the request for continuing examination under 37 CFR 1.114 .

Office of Petitions

Doc Code: PET.AUTO Document Description: Petition automatically granted by EFS-Web	PTO/SB/140 U.S. Patent and Trademark Office Department of Commerce

Electronic Petition Request	**PETITION TO WITHDRAW AN APPLICATION FROM ISSUE AFTER PAYMENT OF THE ISSUE FEE UNDER 37 CFR 1.313(c)**
Application Number	11785860
Filing Date	20-Apr-2007
First Named Inventor	Yuichi Shibazaki
Art Unit	2882
Examiner Name	HUNG NGUYEN
Attorney Docket Number	127874.01
Title	STAGE DRIVE METHOD AND STAGE UNIT, EXPOSURE APPARATUS, AND DEVICE MANUFACTURING METHOD

An application may be withdrawn from issue for further action upon petition by the applicant. To request that the Office withdraw an application from issue, applicant must file a petition under this section including the fee set forth in § 1.17(h) and a showing of good and sufficient reasons why withdrawal of the application from issue is necessary.

APPLICANT HEREBY PETITIONS TO WITHDRAW THIS APPLICATION FROM ISSUE UNDER 37 CFR 1.313(c).

A grantable petition requires the following items:
(1) Petition fee; and
(2) One of the following reasons:
(a) Unpatentability of one or more claims, which must be accompanied by an unequivocal statement that one or more claims are unpatentable, an amendment to such claim or claims, and an explanation as to how the amendment causes such claim or claims to be patentable;
(b) Consideration of a request for continued examination in compliance with § 1.114 (for a utility or plant application only); or
(c) Express abandonment of the application. Such express abandonment may be in favor of a continuing application, but not a CPA under 37 CFR 1.53(d).

Petition Fee

☐ Applicant claims SMALL ENTITY status. See 37 CFR 1.27.

☐ Applicant is no longer claiming SMALL ENTITY status. See 37 CFR 1.27(g)(2).

☐ Applicant(s) status remains as SMALL ENTITY.

☒ Applicant(s) status remains as other than SMALL ENTITY

Reason for withdrawal from issue

○ One or more claims are unpatentable

◉ Consideration of a request for continued examination (RCE) (List of Required Documents and Fees)

○ Applicant hereby expressly abandons the instant application (any attorney/agent signing for this reason must have power of attorney pursuant to 37 CFR 1.32(b)).

RCE request,submission, and fee.

☐ I certify, in accordance with 37 CFR 1.4(d)(4) that : The RCE request ,submission, and fee have already been filed in the above-identified application on

☒ Are attached.

THIS PORTION MUST BE COMPLETED BY THE SIGNATORY OR SIGNATORIES

I certify, in accordance with 37 CFR 1.4(d)(4) that I am:

○ An attorney or agent registered to practice before the Patent and Trademark Office who has been given power of attorney in this application.

◉ An attorney or agent registered to practice before the Patent and Trademark Office, acting in a representative capacity.

○ A sole inventor

○ A joint inventor; I certify that I am authorized to sign this submission on behalf of all of the inventors

○ A joint inventor; all of whom are signing this e-petition

○ The assignee of record of the entire interest that has properly made itself of record pursuant to 37 CFR 3.71

Signature	/Brian K. Kauffman/
Name	Brian K. Kauffman
Registration Number	63199

UNITED STATES PATENT AND TRADEMARK OFFICE

UNITED STATES DEPARTMENT OF COMMERCE
United States Patent and Trademark Office
Address: COMMISSIONER FOR PATENTS
P.O. Box 1450
Alexandria, Virginia 22313-1450
www.uspto.gov

APPLICATION NO.	FILING DATE	FIRST NAMED INVENTOR	ATTORNEY DOCKET NO.	CONFIRMATION NO.
11/785,893	04/20/2007	Chenxi Zhu	1634.1021	5531

21171 7590 07/22/2011
STAAS & HALSEY LLP
SUITE 700
1201 NEW YORK AVENUE, N.W.
WASHINGTON, DC 20005

EXAMINER
PATEL, JAY P

ART UNIT	PAPER NUMBER
2466	

MAIL DATE	DELIVERY MODE
07/22/2011	PAPER

Please find below and/or attached an Office communication concerning this application or proceeding.

The time period for reply, if any, is set in the attached communication.

UNITED STATES PATENT AND TRADEMARK OFFICE

Commissioner for Patents
United States Patent and Trademark Office
P.O. Box 1450
Alexandria, VA 22313-1450
www.uspto.gov

STAAS & HALSEY LLP
SUITE 700
1201 NEW YORK AVENUE, N.W.
WASHINGTON DC 20005

Application No.: 11785893	:	
Filed: 04/20/2007	:	**DECISION ON PETITION**
Patent Number: 7,924,698	:	
Issue Date: 04/12/11	:	
Attorney Docket No. **1634.1021**	:	

This is a decision on the Petition filed under 37 CFR 1.181 received in the United States Patent and Trademark Office (USPTO) on July 14, 2011. Petitioner seeks relief from filing a Petition for Duplicate Letters Patent in this application due to the non-receipt of a large number of Patent Grants in the April 12, 2011 issue.

The Petition is **GRANTED**.

Petitioner submitted a statement that the Patent Grant was not received at the correspondence address of record; that a search of records did not indicate receipt; and that the docketing system is sufficiently reliable. Petitioner filed a copy of the docketing records showing receipts dates and application history as evidence.

Therefore, the Office of Data Management will provide one additional Original Letters Patent for this application.

Telephone inquiries relating to this matter may be directed to the undersigned in the Office of Data Management at 571-272-4200.

/Kimberly Terrell/
Manager
Office of Data Management
Patent Publication Branch

UNITED STATES PATENT AND TRADEMARK OFFICE

Commissioner for Patents
United States Patent and Trademark Office
P.O. Box 1450
Alexandria, VA 22313-1450
www.uspto.gov

RADER FISHMAN & GRAUER PLLC
LION BUILDING
1233 20TH STREET N.W., SUITE 501
WASHINGTON, DC 20036

MAILED
SEP 15 2011
OFFICE OF PETITIONS

In re Application of	:	
Takumi Tsuji	:	
Application No. 11/785,954	:	DECISION GRANTING PETITION
Filed: April 23, 2007	:	UNDER 37 CFR 1.313(c)(2)
Attorney Docket No. SON-3743	:	

This is a decision on the petition under 37 CFR 1.313(c)(2), filed, September 13, 2011 to withdraw the above-identified application from issue after payment of the issue fee.

The petition is **GRANTED**.

The above-identified application is withdrawn from issue for consideration of a submission under 37 CFR 1.114 (request for continued examination). *See* 37 CFR 1.313(c)(2).

Petitioner is advised that the issue fee paid on August 23, 2011 in the above-identified application cannot be refunded. If, however, the above-identified application is again allowed, petitioner may request that it be applied towards the issue fee required by the new Notice of Allowance.[1]

Telephone inquiries should be directed to Irvin Dingle at (571) 272-3210.

This matter is being referred to Technology Center AU 1742 for processing of the request for continued examination under 37 CFR 1.114 and for consideration of the concurrently filed Information Disclosure Statement.

/Irvin Dingle/
Irvin Dingle
Petitions Examiner
Office of Petitions

[1] The request to apply the issue fee to the new Notice may be satisfied by completing and returning the new Issue Fee Transmittal Form PTOL-85(b), which includes the following language thereon: Commissioner for Patents is requested to apply the Issue Fee and Publication Fee (if any) or re-apply any previously paid issue fee to the application identified above. Petitioner is advised that, whether a fee is indicated as being due or not, the Issue Fee Transmittal Form **must** be completed and timely submitted to avoid abandonment. Note the language in bold text on the first page of the Notice of Allowance and Fee(s) Due (PTOL-85).

UNITED STATES PATENT AND TRADEMARK OFFICE

UNITED STATES DEPARTMENT OF COMMERCE
United States Patent and Trademark Office
Address: COMMISSIONER FOR PATENTS
P.O. Box 1450
Alexandria, Virginia 22313-1450
www.uspto.gov

APPLICATION NO.	FILING DATE	FIRST NAMED INVENTOR	ATTORNEY DOCKET NO.	CONFIRMATION NO.
11/785,965	04/23/2007	Shunpei Yamazaki	0756-8012	7247

31780 7590 10/25/2011
Robinson Intellectual Property Law Office, P.C.
3975 Fair Ridge Drive
Suite 20 North
Fairfax, VA 22033

EXAMINER
WEBB, VERNON P

ART UNIT	PAPER NUMBER
2811	

MAIL DATE	DELIVERY MODE
10/25/2011	PAPER

Please find below and/or attached an Office communication concerning this application or proceeding.

The time period for reply, if any, is set in the attached communication.

UNITED STATES PATENT AND TRADEMARK OFFICE

Commissioner for Patents
United States Patent and Trademark Office
P.O. Box 1450
Alexandria, VA 22313-1450
www.uspto.gov

OCT 25 2011

MCDERMOTT WILL & EMERY LLP
600 13TH STREET, N.W.
WASHINGTON DC 20005-30968

In re Application of:	:
Banerjee et al.	: PETITION DECISION
Serial No.: 12/785,965	:
Filed: May 24, 2010	:
Attorney Docket No.: **086016-0114**	

This is in response to the renewed petition under 37 CFR § 1.59(b), filed September 14, 2011, to expunge information from the above identified application. This application has been allowed.

Petitioner requests that the material submitted to the Patent Office on September 14, 2011 be expunged from the record. Petitioner states either: (A) that the information contains trade secret material, proprietary material and/or material that is subject to a protective order which has not been made public; or (B) that the information submitted was unintentionally submitted and the failure to obtain its return would cause irreparable harm to the party who submitted the information or to the party in interest on whose behalf the information was submitted, and the information has not otherwise been made public. The petition fee set forth in 37 CFR § 1.17(g) has been paid.

The reasons set forth in this petition establishes to the satisfaction of the Director that expungement of the information is appropriate. The file entry for this document has been closed and as such the document is no longer publicly available, which is the IFW equivalent to removal of a paper document from a paper file wrapper.

Therefore, petitioner's petition is GRANTED.

Should there be any questions about this decision please contact Marianne C. Seidel by letter addressed to Director, TC 1600, at the address listed above, or by telephone at 571-272-0584 or by facsimile sent to the general Office facsimile number, 571-273-8300.

/MC Seidel/
Marianne C. Seidel, Quality Assurance Specialist
Technology Center 1600

UNITED STATES PATENT AND TRADEMARK OFFICE

Commissioner for Patents
United States Patent and Trademark Office
P.O. Box 1450
Alexandria, VA 22313-1450
www.uspto.gov

MAILED

DEC 16 2010

OFFICE OF PETITIONS

JENKINS, WILSON, TAYLOR & HUNG, P.A.
3100 TOWER BLVD.
SUITE 1200
DURHAM NC 27707

In re Patent No. 7,532,705	:	
Fang-Fang Yin et al	:	
Application No. 11/786,075	:	NOTICE
Filed: April 10, 2007	:	
Attorney Docket No. 180/208/2	:	

This is a notice regarding your request for acceptance of a fee deficiency submission under 37 CFR 1.28 on August 25, 2010.

The Office no longer investigates or rejects original or reissue patent under 37 CFR 1.56. **1098 Off. Gaz. Pat. Office 502 (January 3, 1989)**. Therefore, nothing in this Notice is intended to imply that an investigation was done.

Your fee deficiency submission under 37 CFR 1.28 is hereby **ACCEPTED**.

This patent is no longer entitled to small entity status. Accordingly, all future fees paid in this patent must be paid at the large entity rate.

Inquiries related to this communication should be directed to the undersigned at (571) 272-3208.

/KOC/
Karen Creasy
Petitions Examiner
Office of Petitions

SPE RESPONSE FOR CERTIFICATE OF CORRECTION

Paper No.: _____

DATE : 11/8/10

TO SPE OF : ART UNIT 3618

SUBJECT : Request for Certificate of Correction for Appl. No 11/786,127.: 7677583

Please respond to this request for a certificate of correction within 7 days.

FOR IFW FILES:

Please review the requested changes/corrections as shown in the **COCIN** document(s) in the IFW application image. No new matter should be introduced, nor should the scope or meaning of the claims be changed.

Please complete the response (see below) and forward the completed response to scanning using document code **COCX**.

FOR PAPER FILES:

Please review the requested changes/corrections as shown in the attached certificate of correction. Please complete this form (see below) and forward it with the file to:

Certificates of Correction Branch (CofC)

Should the change(s) Be made?

RoChaun Johnson
Certificates of Correction Branch
571 272-0470

Thank You For Your Assistance

The request for issuing the above-identified correction(s) is hereby:
Note your decision on the appropriate box.

- ☒ **Approved** — **All** changes apply.
- ☐ **Approved in Part** — Specify below which changes **do not** apply.
- ☐ **Denied** — State the reasons for denial below.

Comments: _____

SPE

3618
Art Unit

UNITED STATES PATENT AND TRADEMARK OFFICE

Commissioner for Patents
United States Patent and Trademark Office
P.O. Box 1450
Alexandria, VA 22313-1450
www.uspto.gov

September 21, 2011

FISH & RICHARDSON P.C. (BO)
P.O. BOX 1022
MINNEAPOLIS MN 55440-1022

In re Application of	:	
David S. F. Young et al.	:	**DECISION ON PETITION**
Application No. 11786165	:	
Filed: 04/11/2007	:	***ACCEPTANCE OF COLOR***
Attorney Docket No. **24525-0045001**	:	***DRAWINGS***

This is a decision on the Petition to Accept Color Drawings under 37 C.F.R 1.84 (a) (2), received in the United States Patent and Trademark Office (USPTO) April 11, 2007.

The petition is **GRANTED**.

A grantable petition under 37 C.F.R. 1.84(a) (2) must be accompanied by the following.

1. The fee set forth under 37 C.F.R. 1.17(h),
2. Three (3) sets of the color drawings in question, or (1) set if filed via EFS, and
3. The specification contains appropriate language referring to the color drawings as the first paragraph in that portion of the specification relating to the brief description of the drawings.

The petition was accompanied by all of the required fees and drawings. The specification contains the appropriate language. Therefore, the petition is GRANTED.

Telephone inquires relating to this decision may be directed to the undersigned in the Office of Data Management at 571-272-4200.

/Laura Feldman/
Quality Control Specialist
Office of Data Management
Publications Branch

UNITED STATES PATENT AND TRADEMARK OFFICE

UNITED STATES DEPARTMENT OF COMMERCE
United States Patent and Trademark Office
Address: COMMISSIONER FOR PATENTS
P.O. Box 1450
Alexandria, Virginia 22313-1450
www.uspto.gov

APPLICATION NO.	FILING DATE	FIRST NAMED INVENTOR	ATTORNEY DOCKET NO.	CONFIRMATION NO.
11/786,170	04/11/2007	Todd Alan Mason	965-1-1-1	8700

23898 7590 12/21/2011
VINCENT L. CARNEY LAW OFFICE
P.O. BOX 80836
LINCOLN, NE 68501-0836

EXAMINER
CHIANG, JENNIFER C

ART UNIT	PAPER NUMBER
3751	

MAIL DATE	DELIVERY MODE
12/21/2011	PAPER

Please find below and/or attached an Office communication concerning this application or proceeding.

The time period for reply, if any, is set in the attached communication.

UNITED STATES PATENT AND TRADEMARK OFFICE

Commissioner for Patents
United States Patent and Trademark Office
P.O. Box 1450
Alexandria, VA 22313-1450
www.uspto.gov

VINCENT L. CARNEY LAW OFFICE
P.O. BOX 80836
LINCOLN NE 68501-0836

In re Application of:
MASON, TODD ALAN
Serial No. 11/786,170
Filed: April 11, 2007
Docket: 965-1-1-1
Title: TREE AND STUMP TRIMMING AND REMOVAL SYSTEM

DECISION ON PETITION
UNDER 37 CFR § 1.144

This is a decision on the petition filed August 18, 2011 under 37 CFR § 1.181 requesting a withdrawal of claim objection in the final rejection of September 24, 2010. In the petition, petitioner pointed out that the objection to claims 36 and 77 was improper.

The petition is dismissed as moot.

The record shows in response to the Appeal Brief filed on August 22, 2011, on November 22, 2011 the examiner re-opened the prosecution with new grounds of rejection. In the non-final Office action of November 22, 2011, with the exception of claim rejections, the examiner has withdrawn all objections to the pending claims. In view of the examiner's action, decision on the petition is moot and subject to dismissal.

PETITION DISMISSED.

Any inquiry regarding this decision should be directed to Henry C. Yuen, Special Programs Examiner, at (571) 272-4856.

Robin O. Evans

Robin Evans, Acting Director
Technology Center 3700

Doc Code: PET.PTA.RCAL
Document Description: Request for Recalculation in view of Wyeth

PTO/SB/131 (01-10)
Approved for use through 02/28/2011. OMB 0651-0020
U.S. Patent and Trademark Office; U. S. DEPARTMENT OF COMMERCE
Under the Paperwork Reduction Act of 1995, no persons are required to respond to a collection of information unless it displays a valid OMB control number.

REQUEST FOR RECALCULATION OF PATENT TERM ADJUSTMENT IN VIEW OF *WYETH**

Attorney Docket Number: TI-63806	Patent Number: 7,663,424
Filing Date (or 371(b) or (f) Date): 04-11-2007	Issue Date: 02/16/2010
First Named Inventor: Paul Stulik	
Title: CIRCUIT AND METHOD FOR REDUCING CHARGE INJECTION AND CLOCK FEED-THROUGH IN SWITCHED CAPACITOR CIRCUITS	

PATENTEE HEREBY REQUESTS RECALCULATION OF THE PATENT TERM ADJUSTMENT (PTA) UNDER 35 USC 154(b) INDICATED ON THE ABOVE-IDENTIFIED PATENT. THE PATENTEE'S SOLE BASIS FOR REQUESTING THE RECALCULATION IS THE USPTO'S PRE-*WYETH* INTERPRETATION OF 35 U.S.C. 154(b)(2)(A).

Note: This form is only for requesting a recalculation of PTA for patents issued before March 2, 2010, if the sole basis for requesting the recalculation is the USPTO's pre-*Wyeth* interpretation of 35 U.S.C. 154(b)(2)(A). See Instruction Sheet on page 2 for more information.

Patentees are reminded that to preserve the right to review in the United States District Court for the District of Columbia of the USPTO's patent term adjustment determination, a patentee must ensure that he or she also takes the steps required under 35 U.S.C. 154(b)(3) and (b)(4) and 37 CFR 1.705 in a timely manner.

**Wyeth v. Kappos*, No. 2009-1120 (Fed. Cir., Jan. 7, 2010).

Signature / Wade J. Brady III /	Date August 2, 2010
Name (Print/Typed) Wade J. Brady III	Registration Number 32,080

***Note**: Signatures of all the inventors or assignees of record of the entire interest or their representative(s) are required in accordance with 37 CFR 1.33 and 11.18. Please see 37 CFR 1.4(d) for the form of the signature. If necessary, submit multiple forms for more than one signature, see below**.*

☑ *Total of 1 forms are submitted.

The information is required to obtain or retain a benefit by the public which is to file (and by the USPTO to process) an application. Confidentiality is governed by 35 U.S.C. 122 and 37 CFR 1.11 and 1.14. This collection is estimated to take 12 hours to complete, including gathering, preparing, and submitting the completed application form to the USPTO. Time will vary depending upon the individual case. Any comments on the amount of time you require to complete this form and/or suggestions for reducing this burden, should be sent to the Chief Information Officer, U.S. Patent and Trademark Office, U.S. Department of Commerce, P.O. Box 1450, Alexandria, VA 22313-1450. DO NOT SEND FEES OR COMPLETED FORMS TO THIS ADDRESS. **SEND TO: Commissioner for Patents, P.O. Box 1450, Alexandria, VA 22313-1450.**

If you need assistance in completing the form, call 1-800-PTO-9199 and select option 2.

UNITED STATES PATENT AND TRADEMARK OFFICE

UNITED STATES DEPARTMENT OF COMMERCE
United States Patent and Trademark Office
Address: COMMISSIONER FOR PATENTS
P.O. Box 1450
Alexandria, Virginia 22313-1450
www.uspto.gov

TEXAS INSTRUMENTS INCORPORATED
P O BOX 655474, M/S 3999
DALLAS, TX 75265

Mail Date: 08/17/2010

Applicant	: Paul Stulik	: DECISION ON REQUEST FOR
Patent Number	: 7663424	: RECALCULATION of PATENT
Issue Date	: 02/16/2010	: TERM ADJUSTMENT IN VIEW
Application No	: 11/786,194	: OF WYETH AND NOTICE OF INTENT TO
Filed	: 04/11/2007	: ISSUE CERTIFICATE OF CORRECTION
		:

The Request for Recalculation is **GRANTED** to the extent indicated.

The patent term adjustment has been determined to be **171** days. The USPTO will *sua sponte* issue a certificate of correction reflecting the amount of PTA days determined by the recalculation.

Prior to the issuance of the certificate of correction, the USPTO will afford patentee an opportunity to be heard and request reconsideration. Accordingly, patentee has **one month or thirty (30) days**, whichever is longer, to file a request for reconsideration of this patent term adjustment calculation. See 35 U.S.C. 154(b)(3)(B)(ii) and 37 CFR 1.322(a)(4). No extensions of time will be granted under 37 CFR 1.136.

Patentee should use document code PET.OP if electronically filing a request for reconsideration of this patent term adjustment calculation. The patentee must also include the information required by 37 CFR 1.705(b)(2) and the fee required by 37 CFR 1.18(e). If patentee does not file a timely request for reconsideration of this patent term adjustment calculation including the information required by 37 CFR 1.705(b)(2) and the fee required by 37 CFR 1.18(e), the USPTO will issue a certificate of correction reflecting the PTA determination noted above.

Patentee should be aware that in order to preserve the right to review in the United States District Court for the District of Columbia of the USPTO patent term adjustment determination, patentee must ensure that he or she also take the steps required under 35 U.S.C. 154(b)(4)(A) in a timely manner. Nothing in the request for recalculation should be construed as providing an alternative time frame for commencing a civil action under 35 U.S.C. 154(b)(4)(A).

Any questions concerning this decision should be directed to the Office of Patent Legal Administration at 571-272-7702.

UNITED STATES PATENT AND TRADEMARK OFFICE

UNITED STATES DEPARTMENT OF COMMERCE
United States Patent and Trademark Office
Address: COMMISSIONER FOR PATENTS
P.O. Box 1450
Alexandria, Virginia 22313-1450
www.uspto.gov

APPLICATION NO.	FILING DATE	FIRST NAMED INVENTOR	ATTORNEY DOCKET NO.	CONFIRMATION NO.
11/786,204	04/11/2007	Joseph A. Sorge	Sorge-204	7798

93599 7590 11/10/2011
Eric P. Mirabel, JD, LLM
3783 Darcus Street
Houston, TX 77005

EXAMINER
SHAW, AMANDA MARIE

ART UNIT	PAPER NUMBER
1634	

NOTIFICATION DATE	DELIVERY MODE
11/10/2011	ELECTRONIC

Please find below and/or attached an Office communication concerning this application or proceeding.

The time period for reply, if any, is set in the attached communication.

Notice of the Office communication was sent electronically on above-indicated "Notification Date" to the following e-mail address(es):

emirabel@comcast.net

UNITED STATES PATENT AND TRADEMARK OFFICE

Commissioner for Patents
United States Patent and Trademark Office
P.O. Box 1450
Alexandria, VA 22313-1450
www.uspto.gov

NOV 0 9 2011

Eric P. Mirabel, JD, LLM
3783 Darcus Street
Houston TX 77005

In re Application of: Sorge et al. Serial No.: 11/786,204 Filed: April 11, 2007 Docket: **Sorge-204** Title: **METHODS OF ENRICHING FOR AND IDENTIFYING POLYMORPHISMS**	DECISION ON PETITION TO MAKE SPECIAL FOR NEW APPLICATION UNDER 37 C.F.R. § 1.102 & M.P.E.P. § 708.02

This is a decision on the petition filed on June 28, 2011 to make the above-identified application special for accelerated examination procedure under 37 C.F.R. § 1.102(d).

The petition to make the application special is **DENIED**.

REGULATION AND PRACTICE

To be eligible for accelerated examination under 37 C.F.R. § 1.102(d) and pursuant to the "Change to Practice for Petitions in Patent Applications to Make Special and for Accelerated Examination" published in the Federal Register on June 26, 2006 (71 Fed. Reg. 36323), the following conditions must be satisfied:

1. The application must be a non-reissue utility or design application filed under 37 CFR 1.111(a);.
2. The application, the petition and the required fees must be filed electronically using the USPTO's electronic filing system (EFS), or EFS-web; if not filed electronically, a statement asserting that EFS and EFS-web were not available during the normal business hours;
3. The application, at the time of filing, must be complete under 37 CFR 1.51 and in condition for examination;

> *Conditions for Examination:* The application must be in condition for examination at the time of filing. This means the application must include the following:
> (A) Basic filing fee, search fee, and examination fee, under 37 CFR 1.16 (*see* MPEP section 607(I)),

(B) Application size fee under 37 CFR 1.16(s) (if the specification and drawings exceed 100 sheets of paper) (*see* MPEP section 607(II));
(C) An executed oath or declaration in compliance with 37 CFR 1.63;
(D) A specification (in compliance with 37 CFR 1.52) containing a description (37 CFR 1.71) and claims in compliance with 37 CFR 1.75;
(E) A title and an abstract in compliance with 37 CFR 1.72;
(F) Drawings in compliance with 37 CFR 1.84;
(G) Electronic submissions of sequence listings in compliance with 37 CFR 1.821(c) or (e), large tables, or computer listings in compliance with 37 CFR 1.96, submitted via the USPTO's electronic filing system (EFS) in ASCII text as part of an associated file (if applicable);
(H) Foreign priority claim under 35
U.S.C. 119(a)–(d) identified in the executed oath or declaration or an application data sheet (if applicable);
(I) Domestic benefit claims under 35
U.S.C. 119(e), 120, 121, or 365(c) in compliance with 37 CFR 1.78 (*e.g.*, the specific reference to the prior application must be submitted in the first sentence(s) of the specification or in an application data sheet, and for any benefit claim to a non-English language provisional application, the application must include a statement that: (a) An English language translation, and (b) a statement that the translation is accurate, have been filed in the provisional application) (if applicable);
(J) English language translation under 37 CFR 1.52(d), a statement that the translation is accurate, and the processing fee under 37 CFR 1.17(i) (if the specification is in a non-English language);
(K) No preliminary amendments present on the filing date of the application; and
(L) No petition under 37 CFR 1.47 for a non-signing inventor.

4. The application must contain three or fewer independent claims and twenty or fewer total claims and the claims must be directed to a single invention.

The application as filed is not eligible for the accelerated examination under 37 C.F.R. § 1.102(d) because it was no in condition for examination as evidenced by applicants' failure to file this petition in accordance with the rules for accelerated examination and MPEP 708.02 which states "Any petition to make special, other than those based on applicant's health or age or the Patent Prosecution Highway (PPH) pilot program, filed on or after August 25, 2006 must meet the requirements for the revised accelerated examination program set forth in MPEP § 708.02(a). See subsections III and IV below for the requirements for filing a petition to make special based on applicant's health or age. Applications filed prior to August 25, 2006 are not eligible for the revised accelerated examination program set forth in MPEP § 708.02(a). Until August 25, 2006, applicant may file a petition to make special in an application filed prior to August 25, 2006 by complying with the guidelines and requirements set forth in subsections I-II, and V-XII below. A petition to make special filed on or after August 25, 2006 will only be granted if it is based upon applicant's health or age or is under the PPH pilot program, or if it complies with the requirements set forth in MPEP § 708.02(a)." In the event applicant is attempting to invoke a green tech petition, proper procedures have not been followed. Please see the OG Notice of Dec 2009 and May 2010 for green tech petitions.

For the above-stated reasons, the petition of June 28, 2011 is **DENIED**.

Any inquiry regarding this decision should be directed to Marianne C. Seidel, Quality Assurance Specialist, at (571) 272-0584.

/MC Seidel/
Marianne. C. Seidel, Quality Assurance Specialist
Technology Center 1600

UNITED STATES PATENT AND TRADEMARK OFFICE

Commissioner for Patents
United States Patent and Trademark Office
P.O. Box 1450
Alexandria, VA 22313-1450
www.uspto.gov

STEVENS LAW GROUP
1754 TECHNOLOGY DRIVE
SUITE #226
SAN JOSE CA 95110

MAILED
OCT 12 2010
OFFICE OF PETITIONS

In re Application of	:	
Lefan ZHONG et al.	:	
Application No. 11/786,223	:	DECISION ON PETITION
Filed: April 10, 2007	:	
Attorney Docket No. GQLA-00500	:	

This is a decision on the petition, filed June 22, 2010, which is being treated as a petition under 37 CFR 1.8(b), requesting withdrawal of the holding of abandonment in the above-identified application.

The petition is **GRANTED**.

This application was held abandoned for failure to timely respond to the Office action of December 01, 2009, which set a three (3) month shortened statutory period for reply. Accordingly, a reply was due on or before March 01, 2010. The application was abandoned on March 02, 2010.

Petitioner states that a timely reply was mailed via certificate of mailing on June 01, 2010. Petitioner has provided the Office with a copy of the post card receipt dated June 07, 2010, with a Certificate of Mailing date of June 01, 2010.

A review of the Office records indicates that the response was timely filed with a three (3) month extension of time on June 01, 2010, which makes the reply timely filed.

The petition satisfies the above requirements of 37 CFR 1.8(b). Accordingly, the holding of abandonment for failure to timely file a reply to the Office action of December 01, 2009 is hereby withdrawn and the application restored to pending status.

Telephone inquiries concerning this decision should be directed to Michelle R. Eason at 571-272- 4231.

This application is being referred to Technology Center AU 2628 for appropriate action in the normal course of business on the reply received June 01, 2010.

Thurman K. Page
Petitions Examiner
Office of Petitions

SPE RESPONSE FOR CERTIFICATE OF CORRECTION

Paper No.:20101020

DATE : September 24, 2010

TO SPE OF : ART UNIT 3735

SUBJECT : Request for Certificate of Correction on Patent No.: 7,775,985

A response is requested with respect to the accompanying request for a certificate of correction.

Please complete this form and return with file, within **7** days to:
Certificates of Correction Branch - ST (South Tower) 9A22
Palm location **7590** - Tel. No. (703) 305-8309

With respect to the change(s) requested, correcting Office and/or Applicant's errors, should the patent read as shown in the certificate of correction? No new matter should be introduced, nor should the scope or meaning of the claims be changed.

Thank You For Your Assistance **Certificates of Correction Branch**

The request for issuing the above-identified correction(s) is hereby:

Note your decision on the appropriated box.

☐ **Approved** All changes apply.

☐ **Approved in Part** Specify below which changes **do not** apply.

☒ **Denied** State the reasons for denial below.

Comments:

The application was filed with an unexecuted declaration on 4/10/07 which listed the foreign application in the 119 section but had a box checked next to indicating "priority not claimed." A certified copy of the priority application was filed on the same date. An executed declaration was filed on 7/2/07 with the same boxes checked in the 119 section. On 4/6/10, Applicant filed a new declaration unchecking the box "priority not claimed" next to the foreign application. Applicant provided no statement or explanation as to why the new Declaration was filed. Since the "priority not claimed" box was not unchecked until a time outside that required by 37 CFR 1.55(a)(1)(i), the foreign priority claim is considered untimely. A grantable petition to accept an unintentionally delayed claim for priority is required for the right of priority of this foreign application.

/Charles A Marmor, II/
Supervisory Patent Examiner.Art Unit 3735

DO NOT ENTER: /C.M./

PTO/SB/44 (04-05))
Approved for use through 04/30/2007. OMB 0651-0033
U.S. Patent and Trademark Office. U.S. DEPARTMENT OF COMMERCE
Under the Paperwork Reduction Act of 1995, no persons are required to respond to a collection of information unless it displays a valid OMB control number.
(Also Form PTO-1050)

UNITED STATES PATENT AND TRADEMARK OFFICE
CERTIFICATE OF CORRECTION

PATENT NO: US 7,775,986

APPLICATION NO.: 11/786,261

ISSUE DATE: AUG. 17, 2010

INVENTOR(S): OTFRIED ROEHER AND STEFFEN KORTH

It is certified that error appears in the above-identified patent and that said Letters Patent is hereby corrected as shown below:

On the Cover Page, under

(65) **Prior Publication Data**

US 2009/0112102 A1 Apr. 30, 2009

add:

(30) **Foreign Application Priority Data**

Apr. 10, 2006 (EP) 06112431.9

DO NOT ENTER: /C.M./

Mailing Address of Sender:

RatnerPrestia
P.O. Box 980
Valley Forge, PA 19482
(610) 407-0700

This collection of information is required by 37 CFR 1.322, 1.323 and 1.324. The information is required to obtain or retain a benefit by the public which is to file (and by the USPTO to process) an application. Confidentiality is governed by 35 U.S.C. 122 and 37 CFR 1.14. This collection is estimated to take 1.0 hour to complete, including gathering, preparing, and submitting the completed application form to the USPTO. Time will vary depending upon the individual case. Any comments on the amount of time you require to complete this form and/or suggestions for reducing this burden, should be sent to the Chief Information Officer, U.S. Patent and Trademark Office, U.S. Department of Commerce, P.O. Box 1450, Alexandria, VA 22313-1450. DO NOT SEND FEES OR COMPLETED FORMS TO THIS ADDRESS. **SEND TO: Attention Certificate of Corrections Branch, Commissioner for Patents, P.O. Box 1450, Alexandria, VA 22313-1450.**

If you need assistance completing the form, call 1-800-PTO-9199 and select option 2.

UNITED STATES PATENT AND TRADEMARK OFFICE

Commissioner for Patents
United States Patent and Trademark Office
P.O. Box 1450
Alexandria, VA 22313-1450
www.uspto.gov

RATNERPRESTIA
P.O. BOX 980
VALLEY FORGE PA 19482

MAILED

SEP 13 2011

OFFICE OF PETITIONS

In re Patent No. 7,775,986	:	
Issue Date: August 17, 2010	:	
Application No. 11/786,261	:	DECISION ON PETITION
Filed: April 10, 2007	:	UNDER 37 CFR 1.55(c)
Attorney Docket No. BBMG-108US	:	

This is a decision on the petition under 37 CFR 1.55(c), filed May 5, 2011, to accept an unintentionally delayed claim under 35 U.S.C. § 119(a)-(d) for benefit of priority to the filing date of foreign European Application No. 06112431.9 filed April 10, 2006.

The petition is **DISMISSED**.

A petition under 37 CFR 1.55(c) to accept an unintentionally delayed claim for priority requires:

(1) The nonprovisional application claiming the benefit of an earlier filing date must be filed on or after November 29, 2000;

(2) the claim submitted with the petition must identify the prior foreign application for which priority is claimed, as well as any foreign application for the same subject matter and having a filing date before that of the application for which priority is claimed, by the application number, country, and the filing date and be included either in an oath or declaration (37 CFR 1.63(c)(2)) or in an Application Data Sheet (37 CFR 1.76(b)(6);

(3) the surcharge as set forth in 37 CFR 1.17(t);

(4) a statement that the entire delay between the date the claim was due under 37 CFR 1.55(a)(1) and the date the claim was filed was unintentional (the Director may require additional information where there is a question whether the delay was unintentional); and

(5) the above-identified nonprovisional application must be filed within 12 months of the filing date of the foreign application.

This application was filed on April 10, 2007, which is after November 29, 2000 and within 12 months of April 10, 2006 (the filing date of the foreign application to which benefit is now being claimed).

Discussion

On April 10, 2007, a claim for foreign priority was filed along with the certified copy of the foreign priority document. On July 2, 2007, however, an executed oath/declaration was filed indicating that foreign priority was not being claimed. Then, on April 6, 2010, applicant submitted a newly executed oath/declaration with a claim of foreign priority, but without a petition to accept an unintentionally delayed claim.

The application issued into patent no. 7,775,986 on August 17, 2010.

Decision

The petition requests that the newly executed declaration filed April 6, 2010 be accepted as the petition to accept an unintentionally delayed claim under 35 U.S.C. § 119(a)-(d) for benefit of priority to the filing date of foreign European Application No. 06112431.9 filed April 10, 2006.

The request is dismissed. The April 6, 2010 newly executed oath/declaration was filed without the required petition, without the required surcharge (item 3 above) and without an explanation that the entire delay between the date the claim was due under 37 CFR 1.55(a)(1) and the date the claim was filed was unintentional (item 4 above).

The petition does not comply with items (1) and (4) above.

In regards to item (1), this application, serial no. 11/786,261, is no longer an application but a patent. MPEP 201.14(a) provides that the claim for foreign priority and the certified copy of the foreign application specified in 35 U.S.C. 119(b) or PCT Rule 17 must, in any event, be filed before the patent is granted.

In this case, the claim, as set forth in the petition to accept an unintentionally delayed foreign priority claim, was filed after the August 17, 2010 date in which the patent was granted.

In regards to item (4), there is a question of whether the delay in claiming foreign priority was unintentional. Petitioner did not explain why it was unintentional to indicate that the foreign priority was not claimed in the July 2, 2007 declaration.

MPEP 1402 provides that a reissue application is available to convert the "error" in failing to take any steps to obtain the right of foreign priority under 35 U.S.C. 119(a)-(d) before the patent was granted. See Fontijn v. Okamoto, 518 F.2d 610, 622, 186 USPQ 97, 106 (CCPA 1975) ("a patent may be reissued for the purpose of establishing a claim to priority which was not asserted, or which was not perfected during the prosecution of the original application"). In a situation where it is necessary to submit for the first time both the claim for priority and the certified copy of the priority document in the reissue

application, and the patent to be reissued resulted from a utility or plant application which became the patent to be reissued was filed on or after November 29, 2000, the reissue applicant must (where it is necessary to submit for the first time the claim for priority) also file a petition for an unintentionally delayed priority claim under 37 CFR 1.55(c) in addition to filing a reissue application. See MPEP § 201.14(a).

Further correspondence with respect to this matter should be addressed as follows:

By mail: Mail Stop PETITIONS
Commissioner for Patents
Post Office Box 1450
Alexandria, VA 22313-1450

By hand: Customer Service Window
Mail Stop Petitions
Randolph Building
401 Dulany Street
Alexandria, VA 22314

By fax: (571) 273-8300
ATTN: Office of Petitions

Any questions concerning this matter may be directed to Jose' G Dees at (571) 272-1569.

David Buger
Petitions Examiner
Office of Petitions

UNITED STATES PATENT AND TRADEMARK OFFICE

Commissioner for Patents
United States Patent and Trademark Office
P.O. Box 1450
Alexandria, VA 22313-1450
www.uspto.gov

RATNERPRESTIA
P.O. BOX 980
VALLEY FORGE PA 19482

MAILED

FEB 29 2012

OFFICE OF PETITIONS

In re Patent No.: 7,775,986
Issue Date: August 17, 2010
Application No.: 11/786,261
Filed: April 10, 2007
Attorney Docket No.: BBMG-108US
Title: **THERAPY DEVICE WITH A TIME VARIABLE BLOOD REGULATION**

DECISION ON PETITION

This is a decision on the petition filed January 20, 2012, which is being treated as a petition under 37 CFR 1.182 requesting that the foreign priority claim under 35 USC 119(a-d) be acknowledged. A Petition to Accept Unintentionally Delayed Priority Claim under 35 USC 119(a-d) was dismissed on September 13, 2011.

The rules and statutory provisions governing the operations of the U.S. Patent and Trademark Office require payment of a fee on filing each petition under 37 CFR 1.182. In this instance, the fee required by law is $400.00. Petitioner's Deposit Account No. 18-0350 has been charged $400.00 as authorized in the petition.

The petition is **DISMISSED**.

Any request for reconsideration of this decision must be submitted within TWO (2) MONTHS from the mail date of this decision. Extensions of time under 37 CFR 1.136(a) are permitted. The reconsideration request should include a cover letter entitled "Renewed Petition under 37 CFR 1.182." This is **not** a final agency action within the meaning of 5 U.S.C. § 704.

MPEP 201.16 Using Certificate of Correction to Perfect Claim for Priority Under 35 U.S.C. 119(a)-(d) or (f)

> The failure to perfect a claim to foreign priority benefit prior to issuance of the patent may be cured by filing a reissue application. *Brenner v. State of Israel*, 400 F.2d 789, 158 USPQ 584 (D.C. Cir. 1968). However, under certain conditions, this failure may also be cured by filing a certificate of correction request under 35 U.S.C. 255 and 37 CFR 1.323. For example, in the case of *In re Van Esdonk*, 187 USPQ 671 (Comm'r Pat. 1975), the Commissioner granted a request to issue a certificate of correction in order to perfect a claim to foreign priority benefits.

> In summary, a certificate of correction under 35 U.S.C. 255 and 37 CFR 1.323 may be requested and issued in order to perfect a claim for foreign priority benefit in a patented continuing application if the requirements of 35 U.S.C. 119(a)-(d) or (f) had been satisfied in the parent application prior to issuance of the patent and the requirements of 37 CFR 1.55(a) are met. Furthermore, if the continuing application (other than a design application), which issued as a patent, was filed on or after November 29, 2000 **, in addition to the filing of a certificate of correction request, patentee must also file a petition for an unintentionally delayed foreign priority claim under 37 CFR 1.55(c).

In response to the dismissal of the Petition to Accept Unintentionally Delayed Claim under 35 USC 119(a-d), petitioner filed this petition requesting that the claim for foreign priority be acknowledged as the priority claim was properly made in the patent application. Petitioner states there was no need to file a petition to accept an unintentionally delayed claim because the priority claim was properly filed and perfected in the patent application and the executed oath or declaration filed on July 2, 2007, containing the clerical error indicating the foreign priority was not being claimed, did not cancel the earlier priority claim.

Petitioner argues that "Section G. Deleting Benefit Claims" of MPEP 201.11 does not apply because the priority claim was never cancelled. Petitioner states that the pertinent part of Section G. contemplates only two actions for cancelling a priority claim, amending the specification or submitting a new application data sheet, and that neither of these actions ever occurred.

MPEP 201.11 G. Deleting Benefit Claims

> Effective June 8, 1995, Public Law 103-465 amended 35 U.S.C. 154 to change the term of a patent to 20 years measured from the filing date of the earliest U.S. application for which benefit under 35 U.S.C. 120, 121, or 365(c) is claimed. The 20-year patent term applies to all utility and plant patents issued on applications filed on or after June 8, 1995. As a result of the 20-year patent term, it is expected, in certain circumstances, that applicants may cancel their claim to priority by amending the specification or submitting a new application data sheet (no supplemental declaration is necessary) to delete any references to prior applications. The examiner should consider whether any new prior art may now be available if a benefit claim is deleted. If an applicant is submitting an amendment to the specification or an ADS to delete a benefit claim after final rejection or action, the amendment or ADS will be treated under 37 CFR 1.116 (see MPEP § 714.12 and § 714.13). If the amendment or ADS to delete a benefit claim is submitted after the application has been allowed, the amendment or ADS will be treated under 37 CFR 1.312 (see MPEP § 714.16). A deletion of a benefit claim will not delay the publication of the application unless the amendment or ADS is recognized by the Office within nine weeks prior to the projected publication date that was originally calculated based on the benefit claim. A cancellation of a benefit claim to a prior application may be considered as a showing that the applicant is intentionally waiving the benefit claim to the prior application in the instant application. If the applicant later files a petition to accept an unintentionally delayed claim to add the benefit claim to the prior application in the same application from which the benefit claim was canceled, the Office may refuse to accept such benefit claim because the delay was not unintentional.

Discussion

MPEP 201.11 Section G does not limit the methods in which a priority claim can be cancelled, it only requires applicant to take some action to cancel the priority claim. Here, the foreign priority claim was made on April 10, 2007 and the action taken to delete the foreign priority claim was in the form of a declaration filed July 2, 2007, indicating that foreign priority was not being claimed. Applicant was given notice of the lack of priority in the filing receipt mailed January 16, 2009 and took no further action with respect to the priority claim. Moreover, applicant appears to have agreed that the priority claim was deleted, because on April 6, 2010 applicant submitted a newly executed declaration with a claim for foreign priority.

As stated in MPEP 201.16, the failure to perfect a claim to foreign priority benefit prior to issuance of the patent may be cured by filing a certificate of correction request under 35 U.S.C. 255 and 37 CFR 1.323. Furthermore, if the application was filed on or after November 29, 2000, the patentee must also file a petition for an unintentionally delayed foreign priority claim under 37 CFR 1.55(c).

Decision

The request to acknowledge a proper benefit claim is dismissed in view of the deletion of the benefit claim on July 2, 2007.

Further correspondence with respect to this matter should be addressed as follows:

By mail: Mail Stop PETITIONS
Commissioner for Patents
Post Office Box 1450
Alexandria, VA 22313-1450

By hand: Customer Service Window
Mail Stop Petitions
Randolph Building
401 Dulany Street
Alexandria, VA 22314

By fax: (571) 273-8300
ATTN: Office of Petitions

Any questions concerning this matter may be directed to Jose' G Dees at (571) 272-1569.

David Bucci
Petitions Examiner

UNITED STATES PATENT AND TRADEMARK OFFICE

UNITED STATES DEPARTMENT OF COMMERCE
United States Patent and Trademark Office
Address: COMMISSIONER FOR PATENTS
P.O. Box 1450
Alexandria, Virginia 22313-1450
www.uspto.gov

APPLICATION NO.	FILING DATE	FIRST NAMED INVENTOR	ATTORNEY DOCKET NO.	CONFIRMATION NO.
11/786,285	04/11/2007	Jeff R. Justis	P0027165.00	7792

44985 7590 05/02/2011
Medtronic
710 Medtronic Parkway
Attn: Legal Patents MS: LC340
Minneapolis, MN 55432-5604

EXAMINER
SCHUBERT, CHRISTOPHER

ART UNIT	PAPER NUMBER
3734	

NOTIFICATION DATE	DELIVERY MODE
05/02/2011	ELECTRONIC

Please find below and/or attached an Office communication concerning this application or proceeding.

The time period for reply, if any, is set in the attached communication.

Notice of the Office communication was sent electronically on above-indicated "Notification Date" to the following e-mail address(es):

rs.docketingspinal@medtronic.com
MDT_Core_Spine_Docketing@Cardinal-IP.com

UNITED STATES PATENT AND TRADEMARK OFFICE

Commissioner for Patents
United States Patent and Trademark Office
P.O. Box 1450
Alexandria, VA 22313-1450
www.uspto.gov

Medtronic
710 Medtronic Parkway
Attn: Legal Patents MS: LC340
Minneapolis MN 55432-5604

In re Application of:
JUSTIS, JEFF R. et al
Serial No. 11/786,285
Filed: April 11, 2007
Docket: P0027165.00
Title: TEMPORARY ANCHORABLE TETHER SYSTEMS AND METHODS

DECISION ON PETITION UNDER 37 CFR § 1.181

This is a decision on the petition filed March 24, 2011 under 37 CFR 1.181 requesting withdrawal of the finality of the last Office action mailed March 21, 2009.

The petition is granted.

It is noted that the record does show that in the amendment filed on December 22, 2010, the applicant did not substantively amend at least claim 5. There was no change in scope of at least claim 5. Therefore, the rejection of at least claim 5 under 35 U.S.C. 103(a) as being unpatentable over Smith was not necessitated by the amendment filed on December 22, 2010.

In finding petitioner's points of argument persuasive, the requested relief is granted. As such, the finality of the Office action issued on March 21, 2011 is premature and the finality of the action is hereby withdrawn. The Office action mailed on March 21, 2011 also will be withdrawn due to other error found. A review of the Office action of March 21, 2011 reveals a mistake in Paragraph 2 of the rejection of independent claim 5. In particular, claim 5 is an independent claim and could not have dependent upon another claim 4. Therefore, Paragraph 2 of the Office action is confusing and unclear.

The application is being forwarded to the examiner via the Supervisory Patent Examiner of Art Unit 3734 for preparation of a new office action consistent with this decision. Any inquiry regarding this decision should be directed to Henry C. Yuen, Special Programs Examiner, at (571) 272-4856.

PETITION GRANTED.

Angela D. Sykes, Director
Technology Center 3700

SPE RESPONSE FOR CERTIFICATE OF CORRECTION

Paper No.: ——

DATE : 2/24/2011

TO SPE OF : ART UNIT 2835

SUBJECT : Request for Certificate of Correction for Appl. No.: 11/786298 Patent No.: 7800893 B2

CofC mailroom date: 2/14/2011

Please respond to this request for a certificate of correction within 7 days.

FOR IFW FILES:

Please review the requested changes/corrections as shown in the **COCIN** document(s) in the IFW application image. No new matter should be introduced, nor should the scope or meaning of the claims be changed.

Please complete the response (see below) and forward the completed response to scanning using document code **COCX**.

FOR PAPER FILES:

Please review the requested changes/corrections as shown in the attached certificate of correction. Please complete this form (see below) and forward it with the file to:

Certificates of Correction Branch (CofC)
Randolph Square – 9D10-A
Palm Location 7580

Virginia Tolbert
Certificates of Correction Branch
571-272-0460

Thank You For Your Assistance

The request for issuing the above-identified correction(s) is hereby:
Note your decision on the appropriate box.

- ☑ 1 **Approved** — All changes apply.
- ☐ **Approved in Pa** 2 — Specify below which changes **do not** apply.
- ☐ **Denied** — State the reasons for denial below.

Comments:

/N.D./ 3

/Jayprakash N Gandhi/ 5 — **SPE**

2835 4 — **Art Unit**

PTOL-306 (REV. 7/03) U.S. DEPARTMENT OF COMMERCE Patent and Trademark Office

SPE RESPONSE FOR CERTIFICATE OF CORRECTION

Paper No.: _____

DATE : 2-8-11

TO SPE OF : ART UNIT 2821

SUBJECT : Request for Certificate of Correction for Appl. No.: 11/786,333 Patent No.: 7525780

CofC mailroom date: 2-3-11

Please respond to this request for a certificate of correction within 7 days.

FOR IFW FILES: should cofc be approved

Please review the requested changes/corrections as shown in the **COCIN** document(s) in the IFW application image. No new matter should be introduced, nor should the scope or meaning of the claims be changed.

Please complete the response (see below) and forward the completed response to scanning using document code **COCX**.

FOR PAPER FILES:

Please review the requested changes/corrections as shown in the attached certificate of correction. Please complete this form (see below) and forward it with the file to:

Certificates of Correction Branch (CofC)
Randolph Square – 9D10-A
Palm Location 7580

Carlos Young
Certificates of Correction Branch
703-756-1814 _____

Thank You For Your Assistance

The request for issuing the above-identified correction(s) is hereby:
Note your decision on the appropriate box.

- ☐ **Approved** — **All** changes apply.
- ☐ **Approved in Part** — Specify below which changes **do not** apply.
- ☐ **Denied** — State the reasons for denial below.

Comments: _____

_____

_____

_____

_____

_____ **SPE** _____ **Art Unit**

SPE RESPONSE FOR CERTIFICATE OF CORRECTION

DATE : 2-8-11 Paper No.: _____

TO SPE OF : ART UNIT 2821

SUBJECT : Request for Certificate of Correction for Appl. No.: 11/786,333 Patent No.: 7525780

CofC mailroom date: 2-3-11

Please respond to this request for a certificate of correction within 7 days.

FOR IFW FILES: should coc be approved

Please review the requested changes/corrections as shown in the **COCIN** document(s) in the IFW application image. No new matter should be introduced, nor should the scope or meaning of the claims be changed.

Please complete the response (see below) and forward the completed response to scanning using document code **COCX**.

FOR PAPER FILES:

Please review the requested changes/corrections as shown in the attached certificate of correction. Please complete this form (see below) and forward it with the file to:

Certificates of Correction Branch (CofC)
Randolph Square – 9D10-A
Palm Location 7580

Chris Yung
Certificates of Correction Branch
703-756-1814 _____

Thank You For Your Assistance

The request for issuing the above-identified correction(s) is hereby:
Note your decision on the appropriate box.

- ☑ **Approved** — **All** changes apply.
- ☐ **Approved in Part** — Specify below which changes **do not** apply.
- ☐ **Denied** — State the reasons for denial below.

Comments: _____

Jacob Choi
Supervisory Patent Examiner
Technology Center 2800

SPE

2821
Art Unit

UNITED STATES PATENT AND TRADEMARK OFFICE

Commissioner for Patents
United States Patent and Trademark Office
P.O. Box 1450
Alexandria, VA 22313-1450
www.uspto.gov

BLAKELY SOKOLOFF TAYLOR & ZAFMAN LLP
1279 OAKMEAD PARKWAY
SUNNYVALE CA 94085-4040

MAILED

NOV 22 2010

OFFICE OF PETITIONS

In re Application of	
Alexander O. Goushcha et al.	
Application No. 11/786,385	DECISION ON PETITION
Filed: April 10, 2007	TO WITHDRAW
Attorney Docket No. **2712P017**	FROM RECORD

This is a decision on the Request to Withdraw as attorney or agent of record under 37 CFR § 1.36(b), filed November 5, 2010.

The request is **NOT APPROVED**.

The request still cannot be approved at this present time because the requested change in the correspondence address is improper.

As stated in the previous decision the Office will only accept correspondence address changes to the most current address information provided for the assignee of the entire interest *who properly became of record under 37 CFR 3.71,* or, if no assignee of the entire interest has properly been made of record, the most current address information provided for the first named inventor. 37 CFR 3.71(c) states:

> *An assignee becomes of record either in a national patent application or a reexamination proceeding by filing a statement in compliance with § 3.73(b) that is signed by a party who is authorized to act on behalf of the assignee.*

The assignee must establish its ownership of the patent to the satisfaction of the Director. In this regard, the statement under 37 CFR 3.73(b) must have either: (i) documentary evidence of a chain of title from the original owner to the assignee (*e.g.*, copy of an executed assignment), and a statement affirming that the documentary evidence of the chain of title from the original owner to the assignee was or concurrently is being submitted for recordation pursuant to § 3.11; or (ii) a statement specifying where documentary evidence of a chain of title from the original owner to the assignee is recorded in the assignment records of the Office (*e.g.*, reel and frame number).

Therefore, as there is still currently no Statement under 37 CFR 3.73(b) with the current assignee information of record in the instant application, the Office cannot change the correspondence address to the address on the Request to Withdraw at this present time.

All future communications from the Office will continue to be directed to the above-listed address until otherwise notified by applicant.

Telephone inquires concerning this decision should be directed to JoAnne Burke at 571-272-4584.

/JoAnne Burke/
JoAnne Burke
Petitions Examiner
Office of Petitions

UNITED STATES PATENT AND TRADEMARK OFFICE

Commissioner for Patents
United States Patent and Trademark Office
P.O. Box 1450
Alexandria, VA 22313-1450
www.uspto.gov

ALTMAN & MARTIN
6 BEACON ST, STE 600
BOSTON MA 02108

MAILED
AUG 05 2010
OFFICE OF PETITIONS

In re Application of	:	
Howland, Herbert A.	:	DECISION ON PETITION
Application No. 11/786,422	:	TO WITHDRAW
Filed: April 10, 2007	:	FROM RECORD
Attorney Docket No. HOWLH40881	:	

This is a decision on the Request to Withdraw as attorney or agent of record under 37 C.F.R. § 1.36(b), filed July 6, 2010.

The request is **NOT APPROVED**.

The Office will only accept correspondence address changes to the most current address information provided for the assignee of the entire interest who properly became of record under 37 CFR 3.71, or, if no assignee of the entire interest has properly been made of record, the most current address information provided for the first named inventor.

The Office will not change the correspondence address to that of a new practitioner unless the Request is accompanied by a power of attorney to a new practitioner (e.g., Form PTO/SB/82). This includes address changes to law firms, where no new power of attorney has been filed in the application. If the applicants wish future correspondence to be mailed to a new law firm, a new power of attorney should be submitted in the application and should include the desired change of correspondence address. Accordingly, as the Request to Withdraw specified a law firm as the new correspondence address of record, the request cannot be granted at this time.

All future communications from the Office will be directed to above-listed address until otherwise properly notified by the applicant or a proper change of correspondence address have been submitted.

There is an outstanding Office action, mailed April 29, 2010, which requires a reply. Failure to timely and properly do so will result in abandonment of the application.

Telephone inquires concerning this decision should be directed to the undersigned at (571) 272-3206. All other inquires concerning either the examination or status of the application should be directed to the Technology Center.

Liana Walsh
Petitions Examiner
Office of Petitions

UNITED STATES PATENT AND TRADEMARK OFFICE

Commissioner for Patents
United States Patent and Trademark Office
P.O. Box 1450
Alexandria, VA 22313-1450
www.uspto.gov

Patent No. : 7844677
Application No.: 11/786472
Inventor(s) : Michael L. Asher, et al.
Issued : 11/30/2010
Title : METHOD AND APPARATUS FOR REMOTE ALARM DATA DELIVERY
Attorney Docket No.: 2002-0459 DIV

Re: Request for Certificate of Correction

Consideration has been given your request for the issuance of a certificate of correction for the above-identified patent under the provisions of Rule(s) 1.322 and/or 1.323.

Assignees' names and addresses (assignment data) printed in a patent, are based *solely* on information supplied in the appropriate space for identifying the assignment data, i.e., item 3 of the Issue Fee Transmittal Form PTOL-85B. Granting of a request under 37 CFR 3.81(b) is required to correct applicant's error providing ***incorrect or erroneous*** assignment data, *before* issuance of a Certificate of Correction, under 37 CFR 1.323 *(see Manual of Patent Examining Procedures (M.P.E.P) Chp.1400, sect. 1481).* This procedure is required *at any time after the issue fee is paid*, including after issuance of the patent.

In view of the foregoing, your request, in this matter, is hereby denied.

A request to correct the Assignee under 37 CFR 3.81(b) should include:

A. **the processing fee set forth in 37 CFR 1. 17(i) (currently $130);**
B. a statement that the failure to include the correct assignee name on the PTOL-85B was inadvertent; and
C. a copy of the Notice of Recordation of Assignment Document, reflecting the reel and frame number where the assignment(s) is recorded and/or reflecting proof of *the date* the assignment was submitted for recordation.

In the Request, Applicant(s) may request that the file be forwarded to Certificates of Correction Branch, for issuance of a Certificate of Correction, if the Request is granted.

Any request under 37 CFR 3.81(b) should be directed to the following address or facsimile number:

By mail: Mail Stop PETITIONS
Commissioner for Patents
Post Office Box 1450
Alexandria, VA 22313-1450

By hand: Customer Service Window
Mail Stop Petitions
Randolph Building
40l Dulany Street
Alexandria, VA 22314

By fax: 571-273-0025
ATTN: Office of Petitions

If a fee (currently $100) was previously submitted for consideration of a Request for Certificate of Correction, under CFR 1.323, to correct assignment data, no additional fee is required.

Tasneem Siddiqui
For Mary Diggs (Supervisor)
Decisions & Certificates of Correction Branch
(703) **756-1593** or (703) 756-1814
Date: 02/08/2011

Address: Joseph G. Fenske
Wolff & Samson, PC
One Boland Drive
West Orange, NJ 07052

ts/md

UNITED STATES PATENT AND TRADEMARK OFFICE

Commissioner for Patents
United States Patent and Trademark Office
P.O. Box 1450
Alexandria, VA 22313-1450
www.uspto.gov

ICE MILLER LLP
ONE AMERICAN SQUARE, SUITE 3100
INDIANAPOLIS IN 46282-0200

MAILED

AUG 26 2010

OFFICE OF PETITIONS

In re Application of
Bakshy Akshaykirti Chibber
Application No. 11/786,498
Filed: April 12, 2007
Attorney Docket No. **P01534US01**
(25974.0001)

DECISION ON PETITION
TO WITHDRAW
FROM RECORD

This is a decision on the request to withdraw as attorney of record under 37 CFR § 1.36(b), filed July 26, 2010.

The request is **APPROVED**.

A grantable request to withdraw as attorney/agent of record must be signed by every attorney/agent seeking to withdraw or contain a clear indication that one attorney is signing on behalf of another/others. The Office requires the practitioner(s) requesting withdrawal to certify that he, she, or they have: (1) given reasonable notice to the client, prior to the expiration of the response period, that the practitioner(s) intends to withdraw from employment; (2) delivered to the client or a duly authorized representative of the client all papers and property (including funds) to which the client is entitled; and (3) notified the client of any responses that may be due and the time frame within which the client must respond , pursuant to 37 CFR 10.40.

The request was signed by Homer W. Faucett, III on behalf of all attorneys of record who are associated with Customer Number 22446.

All attorneys/agents associated with Customer Number 22446 have been withdrawn.

Applicant is reminded that there is no attorney of record at this time.

All future correspondence will be directed to the first named inventor Bakshy A. Chibber at the address list listed in the request.

The application is now abandoned for failure to respond to the Office action mailed on January 25, 2010.

Telephone inquiries concerning this decision should be directed to the undersigned at 571-272-4584.

JoAnne Burke
Petitions Examiner
Office of Petitions

cc: Bakshy A. Chibber
15685 Embers Drive
Mishawaka, IN 46545

SPE RESPONSE FOR CERTIFICATE OF CORRECTION

Paper No.:20101201

DATE : December 01, 2010

TO SPE OF : ART UNIT 3644

SUBJECT : Request for Certificate of Correction on Patent No.: 7814866

A response is requested with respect to the accompanying request for a certificate of correction.

Please complete this form and return with file, within **7** days to:
Certificates of Correction Branch - ST (South Tower) 9A22
Palm location **7590** - Tel. No. (703) 305-8309

With respect to the change(s) requested, correcting Office and/or Applicant's errors, should the patent read as shown in the certificate of correction? No new matter should be introduced, nor should the scope or meaning of the claims be changed.

Thank You For Your Assistance **Certificates of Correction Branch**

The request for issuing the above-identified correction(s) is hereby:

Note your decision on the appropriated box.

☐ **Approved** All changes apply.

☐ **Approved in Part** Specify below which changes **do not** apply.

☒ **Denied** State the reasons for denial below.

Comments:

The request for the Certificate of Correction is denied because the applicant's request did not fall within the tirme periods set by 37 CFR 1.78 2(ii). The benefit to the provisional must be made within the time periods or a petition must be filed.

/TIMOTHY D COLLINS/
Supervisory Patent Examiner.Art Unit 3644

UNITED STATES PATENT AND TRADEMARK OFFICE

Commissioner for Patents
United States Patent and Trademark Office
P.O. Box 1450
Alexandria, VA 22313-1450

Date Mailed : December 1, 2010
Serial No. : 11/786623
Patent No. :7,814,866 B1
Patent Issued :October 19, 2010
Inventor(s) Dale Gramza
Title : BACK AND ABDOMINAL SUPPORT, QUICK RELEASE, RELEASE, BODY BAND FOR HANDS-FREE DOG WALKING

Re: Request for Certificate of Correction

Consideration has been given your request for the issuance of a certificate of correction for the above-identified patent.

Respecting the allege error noted in your request, the request for the Certificate of correction is denied because the applicant's request did not fall within the time periods set by 37 CFR 1.78 2(ii). The benefit to the provisional must be made within the time periods or a petition must be filed.

In view of the foregoing your request is hereby denied.

Magdalene Talley
For Mary F. Diggs, Supervisor
Decisions and Certificate
Of Correction Branch
(571)272-0423
FAX 571-270-9942

Patricia M. Costanzia
P.O. Box 101
Elma, NY 14059

MD/mt

UNITED STATES PATENT AND TRADEMARK OFFICE

Commissioner for Patents
United States Patent and Trademark Office
P.O. Box 1450
Alexandria, VA 22313-1450
www.uspto.gov

KLARQUIST SPARKMAN, LLP
121 SW SALMON STREET
SUITE 1600
PORTLAND OR 97204

MAILED

SEP 28 2010

OFFICE OF PETITIONS

In re Application of :
PAUL CAMWELL ET AL. :
Application No. 11/786,644 : NOTICE
Filed: April 11, 2007 :
Attorney Docket No. **3435-78416-01** :

This is a notice regarding your request filed August 18, 2010, for acceptance of a fee deficiency submission under 37 CFR 1.28.

The Office no longer investigates or rejects original or reissue applications under 37 CFR 1.56. **1098 Off. Gaz. Pat. Office 502 (January 3, 1989)**. Therefore, nothing in this Notice is intended to imply that an investigation was done.

Your fee deficiency submission under 37 CFR 1.28 is hereby **ACCEPTED**.

This patent is no longer entitled to small entity status. Accordingly, all future fees paid in this application must be paid at the large entity rate.

Inquiries related to this communication should be directed to the undersigned at (571) 272-4584.

/JoAnne Burke/
JoAnne Burke
Petitions Examiner
Office of Petitions

UNITED STATES PATENT AND TRADEMARK OFFICE

Commissioner for Patents
United States Patent and Trademark Office
P.O. Box 1450
Alexandria, VA 22313-1450
www.uspto.gov

Donald W. Meeker
Patent Agent
924 East Ocean Front #E
Newport Beach CA 92661

MAILED
MAR 25 2011
OFFICE OF PETITIONS

In re Application of :
Mohamed :
Application No. 11/786,703 : ON PETITION
Filed: April 12, 2007 :
Attorney Docket No. N/A :
For: DRIVER TRAINING SYSTEM

This is a decision on the petition under 37 CFR 1.137(b), filed February 15, 2011, to revive the above-identified application.

The petition is **dismissed**.

Any request for reconsideration of this decision must be submitted within TWO (2) MONTHS from the mail date of this decision. Extensions of time under 37 CFR 1.136(a) are permitted. The reconsideration request should include a cover letter entitled "Renewed Petition under 37 CFR 1.137(b)." Petitioner is advised that this is not a final agency decision.

This application became abandoned for failure to reply to the non-final Office action, mailed December 7, 2009, which set an extendable three month period for reply. Accordingly, this application became abandoned on March 8, 2010. A Notice of Abandonment was mailed on June 21, 2010.

A grantable petition pursuant to 37 CFR 1.137(b) must be accompanied by:

(1) the required reply, unless previously filed.;

(2) the petition fee as set forth in 37 CFR 1.17(m);

(3) a statement that the **entire** delay in filing the required reply from the due date for the reply until the filing of a grantable petition pursuant to 37 CFR 1.137(b) was unintentional. The Director may require additional information where there is a question whether the delay was unintentional; and

(4) any terminal disclaimer (and fee set forth in 37 CFR 1.20(d)) required pursuant to 37 CFR 1.137(d).

The instant petition does not satisfy requirement (2) above.

The small entity fee for filing a petition to revive an unintentionally abandoned application under 37 CFR 1.137(b) is set forth in 37 CFR 1.17(m) as $810.00. A review of Office records indicates that petitioner has not paid this fee.

The payment of the petition fee is a prerequisite to the filing of a petition to revive under 37 CFR 1.137(b). This requirement cannot be waived. MPEP 711.03(c)(III)(B). Therefore, consideration of the merits of the petition before receipt of the petition fee is prohibited.

Please submit the $810.00 petition fee promptly.

Further correspondence with respect to this matter should be addressed as follows:

By mail: Mail Stop PETITION
Commissioner for Patents
Post Office Box 1450
Alexandria, VA 22313-1450

By hand: U.S. Patent and Trademark Office
Customer Service Window, Mail Stop Petition
Randolph Building
401 Dulany Street
Alexandria, VA 22314

By FAX: (571) 273-8300 – ATTN: Office of Petitions

By internet: EFS-Web
www.uspto.gov/ebc/efs_help.html
(for help using EFS-Web call the
Patent Electronic Business Center
at (866) 217-9197)

Telephone inquiries concerning this decision should be directed to the undersigned at (571) 272-3230.

Shirene Willis Brantley

Shirene Willis Brantley
Senior Petitions Attorney
Office of Petitions

8-31-2010

UNITED STATES DEPARTMENT OF COMMERCE
Patent and Trademark Office
ASSISTANT SECRETARY OF COMMERCE AND
COMMISSIONER OF PATENTS AND TRADEMARKS
Washington, D.C. 20231

Patent No : 7,742,567 B2
Application No: 11/786,759
Issued : June 22, 2010
Inventor : Boyden, et. al.

Re: Request for Certificate of Correction

Consideration has been given your request for the issuance of a certificate of correction for the above-identified patent under the provision of Rule 1.322 or 1.323.

Respecting the alleged error, on the title page item (*) Notice: the request is to change the Patent Term Adjustment, which can not be granted without a petition decision. Therefore, no correction(s) is in order here under United States Codes (U.S.C.) 254 or 255 the Code of Federal Regulation (C.F.R.) R1.322 or R1.323.

In view of the foregoing, your request is hereby denied.

Further correspondence concerning this matter should be filed and directed to the Petition Office.

Mail Stop Petitions
Commissioner for Patents
Post office Box 1450
Alexandria, Va 22313-1450

Eva James
For Mary Diggs
Decisions 7 Certificates
Of Correction Branch
(703) 765-1583 or 1580

Clarence T. Tegreene
11235 S.E. 6th Street, Suite 200
Bellevue, WA 98004

ej

SPE RESPONSE FOR CERTIFICATE OF CORRECTION

DATE : 11/13/11 Doc Code COCX

TO SPE OF : ART UNIT 2451

SUBJECT : Request for Certificate of Correction for Appl. No.: 11786771 Patent No.: 8044998

CofC mailroom date: 11/03/11

Please respond to this request for a certificate of correction within 7 days.

FOR IFW FILES:

Please review the requested changes/corrections as shown in the **COCIN** document(s) in the IFW application image. No new matter should be introduced, nor should the scope or meaning of the claims be changed.

Please complete the response (see below) and forward the completed response to scanning using document code **COCX**.

FOR PAPER FILES:

Please review the requested changes/corrections as shown in the attached certificate of correction. Please complete this form (see below) and forward it with the file to:

Certificates of Correction Branch (CofC)
Randolph Square – 9D10-A
Palm Location 7580
[redacted]

Note: **Should the Foreign Application Priority Data be added?**

Lamonte Newsome

Certificates of Correction Branch

571-272-3421

Thank You For Your Assistance

The request for issuing the above-identified correction(s) is hereby:
Note your decision on the appropriate box.

SPE RESPONSE FOR CERTIFICATE OF CORRECTION

☒ **Approved** — **All** changes apply.

☐ **Approved in Part** — Specify below which changes **do not** apply.

☐ **Denied** — State the reasons for denial below.

Comments: _____

John Follansbee **SPE** 2451

2451

Art Unit

EAST Search History

EAST Search History (Prior Art)

Ref #	Hits	Search Query	DBs	Default Operator	Plurals	Time Stamp
S1	2	("0786834").PN.	USPAT; USOCR	OR	OFF	2009/08/31 15:08
S2	0	("0786834").PN.	US-PGPUB	OR	OFF	2009/08/31 15:08
S3	1	(11/786834).APP.	US-PGPUB	OR	OFF	2009/08/31 15:08
S4	1179	(206/320).CCLS.	US-PGPUB; USPAT; USOCR; FPRS; DERWENT	OR	OFF	2009/09/01 12:57
S5	1179	(206/320).CCLS.	US-PGPUB; USPAT; USOCR; FPRS; DERWENT	OR	OFF	2009/09/01 13:25
S6	42	("2000337" | "3327888" | "3338390" | "3380608" | "3512631" | "3587699" | "3595433" | "3900550" | "4011940" | "D156918").PN. OR ("4071065"). URPN.	US-PGPUB; USPAT; USOCR	OR	OFF	2009/09/01 13:36
S7	1143	(220/4.21).CCLS.	US-PGPUB; USPAT; USOCR; FPRS; DERWENT	OR	OFF	2009/09/01 15:44
S8	621	(220/4.02).CCLS.	US-PGPUB; USPAT; USOCR; FPRS; DERWENT	OR	OFF	2009/09/01 16:11
S9	16	("4207790" | "4803473" | "5203021").PN. OR ("5697071"). URPN.	US-PGPUB; USPAT; USOCR	OR	OFF	2009/09/01 16:21
S10	110	((PAUL) near2 (GRIFFIN)).INV.	US-PGPUB; USPAT; USOCR	OR	OFF	2009/09/01 16:30
S11	23	((JASON) near2 (COLLINS)).INV.	US-PGPUB; USPAT; USOCR	OR	OFF	2009/09/01 16:34
S12	621	(220/4.02).CCLS.	US-PGPUB; USPAT; USOCR; FPRS; DERWENT	OR	OFF	2009/09/01 16:36
S13	0	(206/316).CCLS.	US-PGPUB; USPAT; USOCR; FPRS; DERWENT	OR	OFF	2009/09/01 18:05
S14	198	(206/316.1).CCLS.	US-PGPUB; USPAT; USOCR; FPRS; DERWENT	OR	OFF	2009/09/01 18:05

S15	458	(220/4.26).CCLS.	US-PGPUB; USPAT; USOCR; FPRS; DERWENT	OR	OFF	2009/09/01 18:15
S16	0	("closure$3withvideocamera").PN.	US-PGPUB; USPAT; USOCR; FPRS; DERWENT	OR	OFF	2009/09/01 18:20
S17	0	("closure$3withvideoandcamera").PN.	US-PGPUB; USPAT; USOCR; FPRS; DERWENT	OR	OFF	2009/09/01 18:20
S18	0	("closure$3withvideoandcamera").PN.	US-PGPUB; USPAT; USOCR; FPRS; DERWENT	OR	OFF	2009/09/01 18:20
S19	0	(206/16.1).CCLS.	US-PGPUB; USPAT; USOCR; FPRS; DERWENT	OR	OFF	2009/09/01 18:21
S20	299	(206/316.2).CCLS.	US-PGPUB; USPAT; USOCR; FPRS; DERWENT	OR	OFF	2009/09/01 18:22
S21	29	220/4.21,4.02.ccls. and mirror	USPAT	OR	OFF	2009/09/02 10:09
S22	1305	220/4.21,4.02.ccls.	US-PGPUB; USPAT	OR	OFF	2009/09/02 10:15
S23	106453	((mirror or reflect$4) near4 (finish or case or cover or hous$4))	US-PGPUB; USPAT	OR	OFF	2009/09/02 10:16
S24	29	S21 and S22	US-PGPUB; USPAT	OR	OFF	2009/09/02 10:16
S25	118104	((mirror or reflect$4) near4 (finish or case or cover or hous$4 or chasis $1))	US-PGPUB; USPAT	OR	ON	2009/09/02 10:18
S26	12	S22 and S25	US-PGPUB; USPAT	OR	ON	2009/09/02 10:19
S27	205305	(translucent$3 or semitransparent$3 or clear or transparent$3)with (finish or case or cover or hous$4 or chasis $1)	US-PGPUB; USPAT	OR	ON	2009/09/02 10:33
S28	11155	S23 same2 S27	US-PGPUB; USPAT	OR	ON	2009/09/02 10:34
S29	1179	(206/320).CCLS.	US-PGPUB; USPAT; USOCR; FPRS; DERWENT	OR	OFF	2009/09/02 10:35
S30	5	(S22 or S29) and S28	US-PGPUB; USPAT	OR	ON	2009/09/02 10:35
S31	67	("220" or "206").clas. and S28	US-PGPUB; USPAT	OR	ON	2009/09/02 10:37
S32	62	S31 not (S24 or S26 or S30)	US-PGPUB; USPAT	OR	ON	2009/09/02 10:38
S33	588587	electronics near3 device or pda or blackberry or cell adj phone or ipod or video adj camera	US-PGPUB; USPAT	OR	ON	2009/09/02 10:43

S34	29	220/4.21,4.02.ccls. and mirror	USPAT	OR	OFF	2009/09/02 10:43
S35	1305	220/4.21,4.02.ccls.	US-PGPUB; USPAT	OR	OFF	2009/09/02 10:43
S36	106453	((mirror or reflect$4) near4 (finish or case or cover or hous$4))	US-PGPUB; USPAT	OR	OFF	2009/09/02 10:43
S37	29	S34 and S35	US-PGPUB; USPAT	OR	OFF	2009/09/02 10:43
S38	118104	((mirror or reflect$4) near4 (finish or case or cover or hous$4 or chasis $1))	US-PGPUB; USPAT	OR	ON	2009/09/02 10:43
S39	12	S35 and S38	US-PGPUB; USPAT	OR	ON	2009/09/02 10:43
S40	205305	(translucent$3 or semitransparent$3 or clear or transparent$3)with (finish or case or cover or hous$4 or chasis $1)	US-PGPUB; USPAT	OR	ON	2009/09/02 10:43
S41	11155	S36 same2 S40	US-PGPUB; USPAT	OR	ON	2009/09/02 10:43
S42	1179	(206/320).CCLS.	US-PGPUB; USPAT; USOCR; FPRS; DERWENT	OR	OFF	2009/09/02 10:43
S43	5	(S35 or S42) and S41	US-PGPUB; USPAT	OR	ON	2009/09/02 10:43
S44	67	("220" or "206").clas. and S41	US-PGPUB; USPAT	OR	ON	2009/09/02 10:43
S45	62	S44 not (S37 or S39 or S43)	US-PGPUB; USPAT	OR	ON	2009/09/02 10:43
S46	2	S45 and S33	US-PGPUB; USPAT	OR	ON	2009/09/02 10:43
S47	1802	S41 and S33	US-PGPUB; USPAT	OR	ON	2009/09/02 10:46
S48	241	S41 same2 S33	US-PGPUB; USPAT	OR	ON	2009/09/02 10:46
S49	235	S48 not (S37 or S39 or S43 or S45)	US-PGPUB; USPAT	OR	ON	2009/09/02 10:47
S50	0	S35 and S49	US-PGPUB; USPAT	OR	ON	2009/09/02 10:47
S51	1	S35 and S48	US-PGPUB; USPAT	OR	ON	2009/09/02 10:48
S52	296	359/511	US-PGPUB; USPAT	OR	ON	2009/09/02 10:50
S53	760	220/4.27	USPAT	OR	OFF	2009/09/02 12:15
S54	783	220/4.27	US-PGPUB; USPAT	OR	OFF	2009/09/02 12:15
S55	783	220/4.27	US-PGPUB; USPAT; USOCR; FPRS; DERWENT	OR	OFF	2009/09/02 12:17

S56	44	220/223	US-PGPUB; USPAT; USOCR; FPRS; DERWENT	OR	OFF	2009/09/02 14:33
S57	2230	206/223	US-PGPUB; USPAT; USOCR; FPRS; DERWENT	OR	OFF	2009/09/02 14:35
S58	1170	206/305	US-PGPUB; USPAT; USOCR; FPRS; DERWENT	OR	OFF	2009/09/02 14:43
S59	40	("1664465" | "1750576" | "2732091" | "2907487" | "3463343" | "4573573" | "4733776" | "4824059" | "5175876").PN. OR ("5368159"). URPN.	US-PGPUB; USPAT; USOCR	OR	OFF	2009/09/02 14:59
S60	1394	220/212	US-PGPUB; USPAT; USOCR; FPRS; DERWENT	OR	OFF	2009/09/02 15:51
S61	21	"4259846"	US-PGPUB; USPAT; USOCR; FPRS; DERWENT	OR	OFF	2009/09/02 16:30
S62	0	("6539726.ap.").PN.	USPAT; USOCR	OR	OFF	2009/09/02 16:31
S63	3	"6539726"	USPAT	OR	OFF	2009/09/02 16:31
S64	6	"2001989"	US-PGPUB; USPAT	OR	OFF	2009/09/02 17:03
S65	1	"60840144"	US-PGPUB; USPAT	OR	OFF	2009/09/02 20:34
S66	0	("786834.apn.").PN.	USPAT; USOCR	OR	OFF	2009/09/02 21:22
S67	2	("0786834").PN.	USPAT; USOCR	OR	OFF	2009/09/02 21:22
S68	1	"11786834"	US-PGPUB; USPAT	OR	OFF	2009/09/02 21:22
S69	0	"642563981"	US-PGPUB; USPAT	OR	OFF	2009/09/03 09:22
S70	0	"642563981"	US-PGPUB; USPAT; USOCR	OR	OFF	2009/09/03 09:22
S71	441	220/287	US-PGPUB; USPAT; USOCR	OR	OFF	2009/09/03 09:22
S72	8	"6425639"	US-PGPUB; USPAT; USOCR	OR	OFF	2009/09/03 09:23
S73	441	220/287	US-PGPUB; USPAT; USOCR	OR	OFF	2009/09/03 09:33
S74	141	215/319	US-PGPUB; USPAT; USOCR	OR	OFF	2009/09/03 09:50
S75	578	174/17R	US-PGPUB; USPAT; USOCR	OR	OFF	2009/09/03 09:56

S76	1395	220/212	US-PGPUB; USPAT; USOCR; FPRS; DERWENT	OR	OFF	2009/09/03 10:09
S77	41	("20010035388" | "3101856" | "3642161" | "3703975" | "4029231" | "4103797" | "4127221" | "4314656" | "4393976" | "4406376" | "4420089" | "4480762" | "4511049" | "4526281" | "4573599" | "4752013" | "4854459" | "5040694" | "5147052" | "5147053" | "5316161" | "5370251" | "5394999" | "5449077" | "5566864" | "5588545" | "5615787" | "5636756" | "5740933" | "5865330" | "5893473" | "5941402" | "6029834" | "6039196" | "6085920" | "6161711" | "6439409").PN. OR ("6612450").URPN.	US-PGPUB; USPAT; USOCR	OR	OFF	2009/09/03 11:08
S78	2	"20040064326"	US-PGPUB; USPAT; USOCR; FPRS; DERWENT	OR	OFF	2009/09/03 12:52
S79	6	"6308831"	US-PGPUB; USPAT; USOCR; FPRS; DERWENT	OR	OFF	2009/09/03 12:54
S80	19729	(interchangable near "10"(different near3 sizes!)) same (container or housing)	US-PGPUB; USPAT; USOCR; FPRS	OR	OFF	2009/09/03 12:56
S81	899951	"206" (interchangable near "10"(different near3 sizes!)) same (container or housing)	US-PGPUB; USPAT; USOCR; FPRS	OR	OFF	2009/09/03 12:57
S82	900018	"206" (interchangeable near "10"(different near3 sizes!)) same (container or housing)	US-PGPUB; USPAT; USOCR; FPRS	OR	OFF	2009/09/03 12:58
S83	19806	(interchangeable near "10"(different near3 sizes!)) same (container or housing)	US-PGPUB; USPAT; USOCR; FPRS	OR	OFF	2009/09/03 12:58
S84	33358	(interchangeable near"10"(different near3 sizes!))same(container or housing)	US-PGPUB; USPAT; USOCR; FPRS	OR	OFF	2009/09/03 12:59
S85	33358	(interchangeable near"10"(different near3 sizes!))same(container or housing)	US-PGPUB; USPAT; USOCR	OR	OFF	2009/09/03 13:00
S86	0	(interchangeable near"10"(different near3 sizes!))same(container or housing)	US-PGPUB; USPAT; USOCR	AND	OFF	2009/09/03 13:00
S87	33358	(interchangeable near"10"(different near3 sizes!))same(container or housing)	US-PGPUB; USPAT; USOCR	OR	OFF	2009/09/03 13:01
S88	182	(interchangeable near10(different near3 sizes!))same(container or housing)	US-PGPUB; USPAT; USOCR	OR	OFF	2009/09/03 13:01
S89	883832	"206"(interchangeable near10 (different near3 sizes!))same (container or housing)	US-PGPUB; USPAT; USOCR	OR	OFF	2009/09/03 13:02

S90	182	(interchangeable near10(different near3 sizes!))same(container or housing)	US-PGPUB; USPAT; USOCR	OR	OFF	2009/09/03 13:02
S91	23	(interchangeable near10(different near3 sizes!))same(container or housing) and "206"	US-PGPUB; USPAT; USOCR	OR	OFF	2009/09/03 14:27
S92	29	(interchangeable near10(different near3 sizes!))same(container or housing) and "220"	US-PGPUB; USPAT; USOCR	OR	OFF	2009/09/03 14:36
S93	0	"5097953".ap.	USPAT	OR	OFF	2009/09/08 10:02
S94	31	"5097953"	US-PGPUB; USPAT	OR	OFF	2009/09/08 10:03
S95	5	"6308831"	US-PGPUB; USPAT	OR	OFF	2009/09/08 10:28
S96	2	D455880	US-PGPUB; USPAT	OR	OFF	2009/09/13 14:44
S97	0	"603949".pn.	US-PGPUB; USPAT	OR	OFF	2009/09/13 14:48
S98	15	"603949"	US-PGPUB; USPAT	OR	OFF	2009/09/13 14:48
S99	21	"969329"	US-PGPUB; USPAT	OR	OFF	2009/09/13 15:23
S100	0	rubberized adj exteror adj finish	USPAT	OR	ON	2010/05/06 09:46
S101	0	rubber adj exterior adj finish	US-PGPUB; USPAT; USOCR; FPRS; EPO; JPO; DERWENT	OR	ON	2010/05/06 09:46
S102	436	two adj way adj mirror	US-PGPUB; USPAT; USOCR; FPRS; EPO; JPO; DERWENT	OR	ON	2010/06/04 10:21
S103	2343	206/320	US-PGPUB; USPAT; USOCR; FPRS; EPO; JPO; DERWENT	OR	ON	2010/06/04 10:21
S104	0	S102 and S103	US-PGPUB; USPAT; USOCR; FPRS; EPO; JPO; DERWENT	OR	ON	2010/06/04 10:21
S105	135759	"206"/$.ccls.	US-PGPUB; USPAT; USOCR; FPRS; EPO; JPO; DERWENT	OR	ON	2010/06/04 10:21
S106	1	S102 and S105	US-PGPUB; USPAT; USOCR; FPRS; EPO; JPO; DERWENT	OR	ON	2010/06/04 10:21
S107	2	two adj way adj mirror adj finish	US-PGPUB; USPAT; USOCR; FPRS; EPO; JPO; DERWENT	OR	ON	2010/06/04 10:22

S108	0	S107 and S105	US-PGPUB; USPAT; USOCR; FPRS; EPO; JPO; DERWENT	OR	ON	2010/06/04 10:23
S109	142057	"220"/$.ccls.	US-PGPUB; USPAT; USOCR; FPRS; EPO; JPO; DERWENT	OR	ON	2010/06/04 10:24
S110	0	S107 and S108	US-PGPUB; USPAT; USOCR; FPRS; EPO; JPO; DERWENT	OR	ON	2010/06/04 10:24
S111	0	S107 and S109	US-PGPUB; USPAT; USOCR; FPRS; EPO; JPO; DERWENT	OR	ON	2010/06/04 10:24
S112	9494416	"2005247584" A1	US-PGPUB; USPAT; USOCR; FPRS; EPO; JPO; DERWENT	OR	ON	2010/06/04 10:25
S113	2	"2005247584"	US-PGPUB; USPAT; USOCR; FPRS; EPO; JPO; DERWENT	OR	ON	2010/06/04 10:25
S114	0	"2005247584"	US-PGPUB	OR	ON	2010/06/04 10:26
S115	0	2005247584A1	US-PGPUB	OR	ON	2010/06/04 10:26
S116	2429990	"2005247584" A1	US-PGPUB	OR	ON	2010/06/04 10:26
S117	0	"2005247584"	US-PGPUB	OR	ON	2010/06/04 10:26
S118	9	("20040064326" | "20050247584" | "4089464" | "6308831").PN.	US-PGPUB; USPAT; USOCR; FPRS; EPO; JPO; DERWENT	OR	ON	2010/06/04 10:31
S119	0	206/320,216,316.1,223	US-PGPUB; USPAT; USOCR; FPRS; EPO; JPO; DERWENT	OR	ON	2010/06/04 10:35
S120	4407	(206/320,216,316.1,223).CCLS.	US-PGPUB; USPAT; USOCR; FPRS; EPO; JPO; DERWENT	OR	OFF	2010/06/04 10:35
S121	0	("l6andl35").PN.	US-PGPUB; USPAT; USOCR; FPRS; EPO; JPO; DERWENT	OR	OFF	2010/06/04 10:36
S122	0	S107 and S120	USPAT	OR	ON	2010/06/04 10:36
S123	0	S107 and S120	US-PGPUB	OR	ON	2010/06/04 10:36
S124	2	("0000635").PN.	USPAT; USOCR	OR	OFF	2010/06/04 10:36
S125	0	("06and35").PN.	USPAT; USOCR	OR	OFF	2010/06/04 10:37

S126	0	S107 and S120	USPAT	OR	ON	2010/06/04 10:37
S127	78686	"220"/$.ccls.	USPAT	OR	ON	2010/06/04 10:37
S128	0	S107 and S127	US-PGPUB; USPAT; USOCR; FPRS; EPO; JPO; DERWENT	OR	ON	2010/06/04 10:37
S129	906355	mirror	US-PGPUB; USPAT; USOCR; FPRS; EPO; JPO; DERWENT	OR	ON	2010/06/04 10:39
S130	0	two-adj-way-adj-mirror	US-PGPUB; USPAT; USOCR; FPRS; EPO; JPO; DERWENT	OR	ON	2010/06/04 10:40
S131	0	two-adj-way-mirror	US-PGPUB; USPAT; USOCR; FPRS; EPO; JPO; DERWENT	OR	ON	2010/06/04 10:40
S132	0	t206/305	US-PGPUB; USPAT; USOCR; FPRS; EPO; JPO; DERWENT	OR	ON	2010/06/04 11:31
S133	1254	206/305	US-PGPUB; USPAT; USOCR; FPRS; EPO; JPO; DERWENT	OR	ON	2010/06/04 11:31
S134	0	two adj mirror adj mirror$2 adj surface	US-PGPUB; USPAT; USOCR; FPRS; EPO; JPO; DERWENT	OR	ON	2010/06/04 11:32
S135	6	two adj way adj mirror$2 adj surface $1	US-PGPUB; USPAT; USOCR; FPRS; EPO; JPO; DERWENT	OR	ON	2010/06/04 11:32
S136	1273615	case and assembly	US-PGPUB; USPAT; USOCR; FPRS; EPO; JPO; DERWENT	OR	ON	2010/06/04 16:58
S137	6	two adj way adj mirror$2 adj surface $1	US-PGPUB; USPAT; USOCR; FPRS; EPO; JPO; DERWENT	OR	ON	2010/06/04 16:59
S138	1	S136 and S137	US-PGPUB; USPAT; USOCR; FPRS; EPO; JPO; DERWENT	OR	ON	2010/06/04 16:59
S139	1530	220/4.02	US-PGPUB; USPAT; USOCR; FPRS; EPO; JPO; DERWENT	OR	ON	2010/06/04 16:59
S140	1	S137 and S139	US-PGPUB; USPAT; USOCR; FPRS; EPO; JPO; DERWENT	OR	ON	2010/06/04 17:00

S141	457	two adj way adj mirror$2	US-PGPUB; USPAT; USOCR; FPRS; EPO; JPO; DERWENT	OR	ON	2010/06/04 17:00
S142	1	S139 and S141	US-PGPUB; USPAT; USOCR; FPRS; EPO; JPO; DERWENT	OR	ON	2010/06/04 17:00
S143	11083618	two adj way adj mirror$2 surface	US-PGPUB; USPAT; USOCR; FPRS; EPO; JPO; DERWENT	OR	ON	2010/06/04 17:04
S144	51189	two adj way adj mirror$2 surface adj finish	US-PGPUB; USPAT; USOCR; FPRS; EPO; JPO; DERWENT	OR	ON	2010/06/04 17:04
S145	135759	"206"/$.ccls.	US-PGPUB; USPAT; USOCR; FPRS; EPO; JPO; DERWENT	OR	ON	2010/06/04 17:05
S146	261	S144 and S145	US-PGPUB; USPAT; USOCR; FPRS; EPO; JPO; DERWENT	OR	ON	2010/06/04 17:05
S147	11083618	two adj way adj mirror$2 surface	US-PGPUB; USPAT; USOCR; FPRS; EPO; JPO; DERWENT	OR	ON	2010/06/04 17:06
S148	59413	S147 and S145	US-PGPUB; USPAT; USOCR; FPRS; EPO; JPO; DERWENT	OR	ON	2010/06/04 17:06
S149	135759	"206"/$.ccls.	US-PGPUB; USPAT; USOCR; FPRS; EPO; JPO; DERWENT	OR	ON	2010/06/04 17:07
S150	11083618	two adj way adj mirror$2 surface	US-PGPUB; USPAT; USOCR; FPRS; EPO; JPO; DERWENT	OR	ON	2010/06/04 17:07
S151	59413	S149 and S150	US-PGPUB; USPAT; USOCR; FPRS; EPO; JPO; DERWENT	OR	ON	2010/06/04 17:07
S152	6	two adj way adj mirrored adj surface	US-PGPUB; USPAT; USOCR; FPRS; EPO; JPO; DERWENT	OR	ON	2010/06/04 17:08
S153	0	S149 and S152	US-PGPUB; USPAT; USOCR; FPRS; EPO; JPO; DERWENT	OR	ON	2010/06/04 17:09
S154	6	two adj way adj mirror$2 adj surface	US-PGPUB; USPAT; USOCR; FPRS; EPO; JPO; DERWENT	OR	ON	2010/06/04 17:10

S155	142057	"220"/$.ccls.	US-PGPUB; USPAT; USOCR; FPRS; EPO; JPO; DERWENT	OR	ON	2010/06/04 17:10
S156	1	S154 and S155	US-PGPUB; USPAT; USOCR; FPRS; EPO; JPO; DERWENT	OR	ON	2010/06/04 17:10
S157	51189	two adj way adj mirror$2 surface adj finish	US-PGPUB; USPAT; USOCR; FPRS; EPO; JPO; DERWENT	OR	ON	2010/06/04 17:11
S158	9052	case adj assembly	US-PGPUB; USPAT; USOCR; FPRS; EPO; JPO; DERWENT	OR	ON	2010/06/04 17:12
S159	6	two adj way adj mirror$2 adj surface	US-PGPUB; USPAT; USOCR; FPRS; EPO; JPO; DERWENT	OR	ON	2010/06/04 17:12
S160	1	S158 and S159 and S155	US-PGPUB; USPAT; USOCR; FPRS; EPO; JPO; DERWENT	OR	ON	2010/06/04 17:12
S161	0	S158 and S159 and S149	US-PGPUB; USPAT; USOCR; FPRS; EPO; JPO; DERWENT	OR	ON	2010/06/04 17:13
S162	49634	caontainer with two adj way mirror$1 adj surface	US-PGPUB; USPAT; USOCR; FPRS; EPO; JPO; DERWENT	OR	ON	2010/06/04 17:14
S163	51501	container with two adj way mirror$1 adj surface	US-PGPUB; USPAT; USOCR; FPRS; EPO; JPO; DERWENT	OR	ON	2010/06/04 17:14
S164	56851	container with two adj way mirror$2 adj surface	US-PGPUB; USPAT; USOCR; FPRS; EPO; JPO; DERWENT	OR	ON	2010/06/04 17:14
S165	191	S149 and S164	US-PGPUB; USPAT; USOCR; FPRS; EPO; JPO; DERWENT	OR	ON	2010/06/04 17:15
S166	55096	container adj two adj way mirror$2 adj surface	US-PGPUB; USPAT; USOCR; FPRS; EPO; JPO; DERWENT	OR	ON	2010/06/04 17:15
S167	121	S166 and S149	US-PGPUB; USPAT; USOCR; FPRS; EPO; JPO; DERWENT	OR	ON	2010/06/04 17:15
S168	306155	two adj way mirror adj surface	US-PGPUB; USPAT; USOCR; FPRS; EPO; JPO; DERWENT	OR	ON	2010/06/04 17:17

S169	732	S149 and S168	US-PGPUB; USPAT; USOCR; FPRS; EPO; JPO; DERWENT	OR	ON	2010/06/04 17:18
S170	1	two adj way adj mirror adj surface	US-PGPUB; USPAT; USOCR; FPRS; EPO; JPO; DERWENT	OR	ON	2010/06/04 17:18
S171	1836780	container	US-PGPUB; USPAT; USOCR; FPRS; EPO; JPO; DERWENT	OR	ON	2010/06/04 17:19
S172	0	S170 and S171	US-PGPUB; USPAT; USOCR; FPRS; EPO; JPO; DERWENT	OR	ON	2010/06/04 17:19
S173	0	S170 with S171	US-PGPUB; USPAT; USOCR; FPRS; EPO; JPO; DERWENT	OR	ON	2010/06/04 17:19
S174	19204	container adj two way adj mirror$2 adj surface	US-PGPUB; USPAT; USOCR; FPRS; EPO; JPO; DERWENT	OR	ON	2010/06/04 17:20
S175	1915	S149 and S174	US-PGPUB; USPAT; USOCR; FPRS; EPO; JPO; DERWENT	OR	ON	2010/06/04 17:20
S176	0	container adj two adj way adj mirror $2 adj surface	US-PGPUB; USPAT; USOCR; FPRS; EPO; JPO; DERWENT	OR	ON	2010/06/04 17:21
S177	0	container with two adj way adj mirror $2 adj surface	US-PGPUB; USPAT; USOCR; FPRS; EPO; JPO; DERWENT	OR	ON	2010/06/04 17:21
S178	0	container and two adj way adj mirror $2 adj surface	US-PGPUB; USPAT; USOCR; FPRS; EPO; JPO; DERWENT	OR	ON	2010/06/04 17:21
S179	6	two adj way adj mirror$2 adj surface	US-PGPUB; USPAT; USOCR; FPRS; EPO; JPO; DERWENT	OR	ON	2010/06/04 17:24
S180	25	("0909450" | "0951126" | "1786033" | "2075613" | "2132472" | "2286247" | "3292287" | "3610918" | "3711188" | "3823500").PN. OR ("3937948"). URPN.	US-PGPUB; USPAT; USOCR	OR	ON	2010/06/04 17:26

EAST Search History (Interference)

<This search history is empty>

1/1/2011 2:32:26 PM
H:\ portable electronic device case configuration.wsp

Doc code : PET.OP.AGE
Description : Petition to make special based on Age/Health

PTO/SB/130 (07-09)
Approved for use through 07/31/2012. OMB 0651- 0031
U.S. Patent and Trademark Office; U.S. DEPARTMENT OF COMMERCE
Under the Paperwork Reduction Act of 1995, no persons are required to respond to a collection of information unless it contains a valid OMB control number

PETITION TO MAKE SPECIAL BASED ON AGE FOR ADVANCEMENT OF EXAMINATION UNDER 37 CFR 1.102(c)(1)

Application Information

Application Number	11/786,851	Confirmation Number	3399	Filing Date	2007-04-13
Attorney Docket Number (optional)	29678-2	Art Unit	3775	Examiner	Michael Araj
First Named Inventor	Kamaljit S. Paul				
Title of Invention	Spinal Plate Assembly				

Attention: Office of Petitions
An application may be made special for advancement of examination upon filing of a petition showing that the applicant is 65 years of age, or more. No fee is required with such a petition. See 37 CFR 1.102(c)(1) and MPEP 708.02 (IV).

APPLICANT HEREBY PETITIONS TO MAKE SPECIAL FOR ADVANCEMENT OF EXAMINATION IN THIS APPLICATION UNDER 37 CFR 1.102(c)(1) and MPEP 708.02 (IV) ON THE BASIS OF THE APPLICANT'S AGE.

A grantable petition requires one of the following items:
(1) Statement by one named inventor in the application that he/she is 65 years of age, or more; or
(2) Certification by a registered attorney/agent having evidence such as a birth certificate, passport, driver's license, etc. showing one named inventor in the application is 65 years of age, or more.

Name of Inventor who is 65 years of age, or older

Given Name	Middle Name	Family Name	Suffix
Kamaljit	S.	Paul	

A signature of the applicant or representative is required in accordance with 37 CFR 1.33 and 10.18.
Please see 37 CFR 1.4(d) for the format of the signature.

Select (1) or (2) :

○ (1) I am an inventor in this application and I am 65 years of age, or more.

◉ (2) I am an attorney or agent registered to practice before the Patent and Trademark Office, and I certify that I am in possession of evidence, and will retain such in the application file record, showing that the inventor listed above is 65 years of age, or more.

Signature	/Thomas D. Wilhelm/	Date (YYYY-MM-DD)	2011-04-27
Name	Thomas D. Wilhelm	Registration Number	28794

PTO/SB/130 (07-09)
Approved for use through 07/31/2012. OMB 0651- 0031
U.S. Patent and Trademark Office; U.S. DEPARTMENT OF COMMERCE
Under the Paperwork Reduction Act of 1995, no persons are required to respond to a collection of information unless it contains a valid OMB control number

Privacy Act Statement

The Privacy Act of 1974 (P.L. 93-579) requires that you be given certain information in connection with your submission of the attached form related to a patent application or patent. Accordingly, pursuant to the requirements of the Act, please be advised that: (1) the general authority for the collection of this information is 35 U.S.C. 2(b)(2); (2) furnishing of the information solicited is voluntary; and (3) the principal purpose for which the information is used by the U.S. Patent and Trademark Office is to process and/or examine your submission related to a patent application or patent. If you do not furnish the requested information, the U.S. Patent and Trademark Office may not be able to process and/or examine your submission, which may result in termination of proceedings or abandonment of the application or expiration of the patent.

The information provided by you in this form will be subject to the following routine uses:

1. The information on this form will be treated confidentially to the extent allowed under the Freedom of Information Act (5 U.S.C. 552) and the Privacy Act (5 U.S.C. 552a). Records from this system of records may be disclosed to the Department of Justice to determine whether the Fr eedom of Information Act requires disclosure of these records.

2. A record from this system of records may be disclosed, as a routine use, in the course of presenting evidence to a court, magistrate, or administrative tribunal, including disclosures to opposing counsel in the course of settlement negotiations.

3. A record in this system of records may be disclosed, as a routine use, to a Member of Congress submitting a request involving an individual, to whom the record pertains, when the individual has requested assistance from the Member with respect to the subject matter of the record.

4. A record in this system of records may be disclosed, as a routine use, to a contractor of the Agency having need for the information in order to perform a contract. Recipients of information shall be required to comply with the requirements of the Privacy Act of 1974, as amended, pursuant to 5 U.S.C. 552a(m).

5. A record related to an International Application filed under the Patent Cooperation Treaty in this system of records may be disclosed, as a routine use, to the International Bureau of the World Intellectual Property Organization, pursuant to the Patent Cooperation Treaty.

6. A record in this system of records may be disclosed, as a routine use, to another federal agency for purposes of National Security review (35 U.S.C. 181) and for review pursuant to the Atomic Energy Act (42 U.S.C. 218(c)).

7. A record from this system of records may be disclosed, as a routine use, to the Administrator, General Services, or his/her designee, during an inspection of records conducted by GSA as part of that agency's responsibility to recommend improvements in records management practices and programs, under authority of 44 U.S.C. 2904 and 2906. Such disclosure shall be made in accordance with the GSA regulations governing inspection of records for this purpose, and any other relevant (i.e., GSA or Commerce) directive. Such disclosure shall not be used to make determinations about indivi duals.

8. A record from this system of records may be disclosed, as a routine use, to the public after either publication of the application pursuant to 35 U.S.C. 122(b) or issuance of a patent pursuant to 35 U.S.C. 151. Further, a record may be disclosed, subject to the limitations of 37 CFR 1.14, as a routine use, to the public if the record was filed in an application which became abandoned or in which the proceedings were terminated and which application is referenced by either a published application, an application open to public inspections or an issued patent.

9. A record from this system of records may be disclosed, as a routine use, to a Federal, State, or local law enforcement agency, if the USPTO becomes aware of a violation or potential violation of law or regulation.

UNITED STATES PATENT AND TRADEMARK OFFICE

Commissioner for Patents
United States Patent and Trademark Office
P.O. Box 1450
Alexandria, VA 22313-1450
www.uspto.gov

In re Application of
Kamaljit S. Paul

Application No. 11786851

Filed: April 13,2007

Attorney Docket No. 29678-2

:DECISION ON PETITION TO MAKE SPECIAL
:UNDER 37 CFR 1.102(c)(1)

This is a decision on the electronic petition under 37 CFR 1.102 (c)(1), filed 27-APR-2011 to make the above-identified application special based on applicant's age as set forth in MPEP § 708.02, Section IV.

The petition is **GRANTED**.

A grantable petition to make an application special under 37 CFR 1.102(c)(1), MPEP § 708.02, Section IV: Applicant's Age must include a statement by applicant or a registered practitioner having evidence that applicant is at least 65 years of age. No fee is required.

Accordingly, the above-identified application has been accorded "special" status and will be taken up for action by the examiner upon the completion of all pre-examination processing.

Telephone inquiries concerning this electronic decision should be directed to the Electronic Business Center at 866-217-9197.

All other inquiries concerning either the examination or status of the application should be directed to the Technology Center.

Doc Code: PET.AUTO Document Description: Petition automatically granted by EFS-Web	PTO/SB/140 U.S. Patent and Trademark Office Department of Commerce

Electronic Petition Request	**PETITION TO WITHDRAW AN APPLICATION FROM ISSUE AFTER PAYMENT OF THE ISSUE FEE UNDER 37 CFR 1.313(c)**
Application Number	11786887
Filing Date	13-Apr-2007
First Named Inventor	Berthold Hahn
Art Unit	2895
Examiner Name	THIEN TRAN
Attorney Docket Number	5367-295
Title	RADIATION-EMITTING BODY AND METHOD FOR PRODUCING A RADIATION-EMITTING BODY

An application may be withdrawn from issue for further action upon petition by the applicant. To request that the Office withdraw an application from issue, applicant must file a petition under this section including the fee set forth in § 1.17(h) and a showing of good and sufficient reasons why withdrawal of the application from issue is necessary.

APPLICANT HEREBY PETITIONS TO WITHDRAW THIS APPLICATION FROM ISSUE UNDER 37 CFR 1.313(c).

A grantable petition requires the following items:
(1) Petition fee; and
(2) One of the following reasons:
(a) Unpatentability of one or more claims, which must be accompanied by an unequivocal statement that one or more claims are unpatentable, an amendment to such claim or claims, and an explanation as to how the amendment causes such claim or claims to be patentable;
(b) Consideration of a request for continued examination in compliance with § 1.114 (for a utility or plant application only); or
(c) Express abandonment of the application. Such express abandonment may be in favor of a continuing application, but not a CPA under 37 CFR 1.53(d).

Petition Fee

☐ Applicant claims SMALL ENTITY status. See 37 CFR 1.27.

☐ Applicant is no longer claiming SMALL ENTITY status. See 37 CFR 1.27(g)(2).

☐ Applicant(s) status remains as SMALL ENTITY.

☒ Applicant(s) status remains as other than SMALL ENTITY

Reason for withdrawal from issue

○ One or more claims are unpatentable

◉ Consideration of a request for continued examination (RCE) (List of Required Documents and Fees)

○ Applicant hereby expressly abandons the instant application (any attorney/agent signing for this reason must have power of attorney pursuant to 37 CFR 1.32(b)).

RCE request,submission, and fee.

☐ I certify, in accordance with 37 CFR 1.4(d)(4) that : The RCE request ,submission, and fee have already been filed in the above-identified application on

☒ Are attached.

THIS PORTION MUST BE COMPLETED BY THE SIGNATORY OR SIGNATORIES

I certify, in accordance with 37 CFR 1.4(d)(4) that I am:

◉ An attorney or agent registered to practice before the Patent and Trademark Office who has been given power of attorney in this application.

○ An attorney or agent registered to practice before the Patent and Trademark Office, acting in a representative capacity.

○ A sole inventor

○ A joint inventor; I certify that I am authorized to sign this submission on behalf of all of the inventors

○ A joint inventor; all of whom are signing this e-petition

○ The assignee of record of the entire interest that has properly made itself of record pursuant to 37 CFR 3.71

Signature	/Ian R. Blum/
Name	Ian R. Blum
Registration Number	42336

UNITED STATES PATENT AND TRADEMARK OFFICE

Commissioner for Patents
United States Patent and Trademark Office
P.O. Box 1450
Alexandria, VA 22313-1450
www.uspto.gov

Decision Date : February 3, 2012

In re Application of :

Berthold Hahn

DECISION ON PETITION

UNDER CFR 1.313(c)(2)

Application No : 11786887

Filed : 13-Apr-2007

Attorney Docket No : 5367-295

This is an electronic decision on the petition under 37 CFR 1.313(c)(2), filed February 3, 2012 , to withdraw the above-identified application from issue after payment of the issue fee.

The petition is **GRANTED.**

The above-identified application is withdrawn from issue for consideration of a submission under 37 CFR 1.114 (request for continued examination). See 37 CFR 1.313(c)(2).

Petitioner is advised that the issue fee paid in this application cannot be refunded. If, however, this application is again allowed, petitioner may request that it be applied towards the issue fee required by the new Notice of Allowance.

Telephone inquiries concerning this decision should be directed to the Patent Electronic Business Center (EBC) at 866-217-9197.

This application file is being referred to Technology Center AU 2895 for processing of the request for continuing examination under 37 CFR 1.114 .

Office of Petitions

SPE RESPONSE FOR CERTIFICATE OF CORRECTION

Paper No.: 04062011

DATE : April 5, 2011

TO SPE OF : ART UNIT 2117

SUBJECT : Request for Certificate of Correction for Appl. No.: 11786968 Patent No.: 7823034

CofC mailroom date: Mar. 28, 2011

Please respond to this request for a certificate of correction within 7 days.

FOR IFW FILES:

Please review the requested changes/corrections as shown in the **COCIN** document(s) in the IFW application image. No new matter should be introduced, nor should the scope or meaning of the claims be changed.

Please complete the response (see below) and forward the completed response to scanning using document code **COCX**.

FOR PAPER FILES:

Please review the requested changes/corrections as shown in the attached certificate of correction. Please complete this form (see below) and forward it with the file to:

Certificates of Correction Branch (CofC)
Randolph Square – 9D10-A
Palm Location 7580

Certificates of Correction Branch

703-756-1814

Thank You For Your Assistance

The request for issuing the above-identified correction(s) is hereby:

Note your decision on the appropriate box.

☒ **Approved**	**All** changes apply.
☐ **Approved in Part**	Specify below which changes **do not** apply.
☐ **Denied**	State the reasons for denial below.

Comments: Approved – ALL changes apply.

/John J. Tabone, Jr./ (Primary Examiner) 2117

SPE **Art Unit**

UNITED STATES PATENT AND TRADEMARK OFFICE

CERTIFICATE OF CORRECTION

PATENT NO. : 7,854,729 B2
APPLICATION NO. : 11/787036
DATED : December 21, 2010
INVENTOR(S) : Jack W. Romano and Adam L. Smith

It is certified that error appears in the above-identified patent and that said Letters Patent is hereby corrected as shown below:

1) Title Page; item (57) Abstract line 5: insert --of-- between --amount-- and --solid-- to read; "amount of solid".
2) Column 1, line 47-48: delete the "." to read "Environmental Protection".
3) Column 1, line 51: deleted "assembled" to read "year 2010".
4) Column 1, line 56: add an --s-- to 'Organization' to read "Organizations".
5) Column 1, line 57: add an --s-- to 'organization' to read "organizations".
6) Column 2, line 13: insert --and-- between --durometer-- and --should-- to read "durometer and should".
7) Column 2, line 26: delete "assemble" and insert --assembly--.
8) Column 2, line 42: delete the second "in" to read "For example collection".
9) Column 2, line 43: delete the "y" between --systems-- and --should-- to read "systems should".
10) Column 2, line 51: delete "seal" and insert --seals-- to read "checking seals must".
11) Column 2, line 53: delete "time" and insert --times-- to read "many times the".
12) Column 2, line 55: delete "time" and insert --times-- to read "at times different".
13) Column 3, line 29: delete "canister" and insert --canisters-- to read "collection canisters attached".
14) Column 3, line 46: Insert --have-- between --sometimes-- and --difficulty-- to read "sometimes have difficulty".
15) Column 3, line 51: delete "container are ore" and insert --containers are more-- to read "containers are more".
16) Column 3, line 53: delete "because" to read "and the".
17) Column 3, line 54: delete "and" to read "size could".
18) Column 3, line 55: delete "Al" and insert --al-- to read "et. al. discloses".
19) Column 3, line 55: delete "id" and insert --lid-- to read "and lid combination".
20) Column 3, line 56: delete "only" to read "will separate".
21) Column 3, line 63: delete one of the two words "ongoing" to read "required ongoing inventory".
22) Column 3, line 64: delete "." and insert --and-- to read "space and inventory".
23) Column 4, line 1: delete "Al." and insert --al.-- to read "et. al., discloses".
24) Column 4, line 3: delete "This" and insert --The-- to read "canister. The disadvantages".
25) Column 4, line 6: delete "plus require" to read "and maintenance requires periodic".

Signed and Sealed this
Twenty-ninth Day of March, 2011

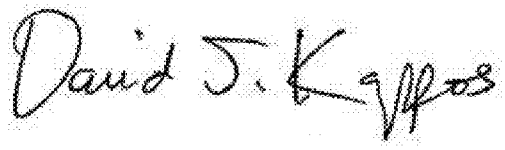

David J. Kappos
Director of the United States Patent and Trademark Office

26) Column 4, line 8: insert --an-- between --is-- and --additional-- to read “is an additional”.
27) Column 4, line 9: insert --such as-- between --disadvantages-- and --a-- to read “disadvantages such as a”.
28) Column 4, line 19: delete “id” and insert --is-- between --system-- and --delivered-- to read “system is delivered”.
29) Column 4, line 21: insert --of-- between --tracking-- and --a-- to read “tracking of a”.
30) Column 4, line 22: delete “liner” and insert --liners-- to read “and liners can”.
31) Column 4, line 38: delete “containers” and insert --container-- to read “of container handling”.
32) Column 4, line 51: delete “dies-assembly” and insert --dis-assembly-- to read “and dis-assembly features”.
33) Column 4, line 56: delete “=” between --that-- and --are-- to read “that are”.
34) Column 4, line 59: delete “assemble” and insert --assembled-- to read “be assembled with”.
35) Column 4, line 66: delete “contents” and insert --contends-- to read “Applicant contends that”.
36) Column 5, line 7-8: delete “container” and insert --containers-- to read “delivery containers which”.
37) Column 5, line 39: delete “deposal” and insert --disposal-- to read “the disposal chain”.
38) Column 5, line 41: delete “the” and insert --then-- to read “and then integrates”.
39) Column 5, line 45: delete “fabrication” and insert --fabrications-- to read “container fabrications applicable”.
40) Column 5, line 50-51: delete “close” and insert --closed-- to read “a closed top”.
41) Column 5, line 61: delete “these” and insert --the-- to read “of the instant”.
42) Column 5, line 63: delete “and for the” and insert --for-- to read “products for waste”.
43) Column 6, line 10: delete the second “the” to read “(unnecessary) need”.
44) Column 6, line 12: insert --associated-- between --costs-- and --with-- to read “costs associated with”.
45) Column 6, line 13: delete “supply and” to read “separate disposal/collection”.
46) Column 6, line 16: delete “side” and insert --chain-- to read “disposal chain and”.
47) Column 6, line 17-18: delete “container” and insert --containers-- to read “such containers are”.
48) Column 6, line 26: insert a “,” at the end of line 26 following the word solution.
49) Column 6, line 31: delete “solution” and insert --solutions-- to read “alcohol solutions and”.
50) Column 6, line 38: add a “,” between --polyethylene-- and --polyvinyl--.
51) Column 6, line 49: delete “container” and insert --containers-- to read “Other containers such”.
52) Column 6, line 51-52: delete “suit-able” and insert --suit-ably-- to read “function suitably within”.
53) Column 6, line 66: insert --blow molded-- between --continuous-- and --containers-- to read “continuous blow molded containers,”
54) Column 6, line 67 to Column 7, line 1: delete “const” and insert --cost-- to read “been cost effectively”.
55) Column 7, line 3: insert --and do not-- between --forces-- and --provide-- to read “forces and do not provide”.
56) Column 7, line 3: delete “Options” and insert --options-- to read “solution options solving”.
57) Column 7, line 12: insert --The-- between --facility-- and --Present-- to read “facility. The present”.
58) Column 7, line 22: delete “and methods” to read “containers for”.
59) Column 7, line 23: delete “to” and insert --of-- in its place to read “side of the”.

60) Column 7, line 31: delete “dispose” and insert --disposal-- in its place to read “a disposal and”.
61) Column 7, line 34: delete “to” to read “confers options”.
62) Column 7, line 46: delete “this” and insert --thin-- in its place to read “relatively thin plastic”.
63) Column 7, line 46: delete “wall” and insert --walls-- in its place to read “plastic walls sometimes”.
64) Column 7, line 46: add --to-- between --down-- and --the-- to read “down to the”.
65) Column 7, line 58: delete “I” and insert --in-- in its place to read “thickness in these”.
66) Column 7, line 58: delete “hot” and insert --not-- in its place to read “are not generally”.
67) Column 7, line 67: delete “sheet” and insert --sheets-- in its place to read “plastic sheets to”.
68) Column 8, line 6: delete “to” and insert --the-- in its place to read “connect the container”.
69) Column 8, line 7: insert --a-- between --whereby-- and --container-- to read “whereby a container”.
70) Column 8, line 11: delete “with” and insert --which-- in its place to read “pressures which provides”.
71) Column 8, line 37: delete “interpose” and insert --interposed-- in its placed to read “is interposed peripherally”.
72) Column 9, line 17: insert --is to orient a-- between --invention-- and --liquid-- to read “invention is to orient a”.
73) Column 9, line 28: insert --is in-- between --and-- and --flow-- to read “and is in flow”.
74) Column 9, line 67: delete “container” and insert --containers-- in its place to read “collection containers within”.
75) Column 10, line 14: delete “positing” and insert --positioning-- in its place to read “comprises positioning a”.
76) Column 10, line 21: insert --in-- between --is-- and --position-- to read “is in position”.
77) Column 10, line 28: insert --with respect-- between --downstream-- and --to-- to read “downstream with respect to”.
78) Column 10, line 66: delete “a” to read “with waste”.
79) Column 10, line 66: delete “the” to read “collecting waste”.
80) Column 11, line 67: delete “salability” and insert --sealability-- in its place to read “a sealability of”.
81) Column 12, line 26: delete “toylid” and insert --to lid-- in its place to read “attached to lid 4”.
82) Column 12, line 32: delete “show” and insert --shown-- in its place to read “are shown sealed”.
83) Column 12, line 55: delete “process” and insert --processed-- in its place to read “is processed into”.
84) Column 12, line 56: delete “process” and insert --processed-- in its place to read “is processed into”.
85) Column 13, line 19: insert --with-- between --contacts-- and --container-- to read “contacts with container”.
86) Column 13, line 27: delete “and” and insert --an-- in its place to read “comprises an easy”.
87) Column 13, line 29: insert --way-- between --easy-- and --to-- to read “easy way to”.
88) Column 13, line 34: delete “Figure” and insert --Figures-- in its place to read “in Figures on”.
89) Column 13, line 42: delete “124” and insert --14-- in its place to read “container 14 and”.
90) Column 13, line 56: delete “and” and insert --an-- in its place to read “shows an exploded”.
91) Column 14, line 25: delete “and” and insert --as-- in its place to read “22 as well”.
92) Column 14, line 34: delete “lack” and insert --lock-- in its place to read “of lock 5”.

93) Column 14, line 45: delete “g” to read “depicting its”.

94) Column 14, line 46: delete “a” to read “ depicting dimensions”.
95) Column 14, line 53: delete “bottle” and insert --bottom-- in its place to read “of bottom of.
96) Column 14, line 53: delete “so” and insert --of said-- in its place to read “bottom of said stand”.
97) Column 14, line 60: insert a --,-- between --slot-- and --a-- to read “slot, a”
98) Column 14, line 62: insert a --,-- between --stand-- and --and-- to read “stand, and”.
99) Column 14, line 62: delete “showing” and insert --shown-- in its place to read “dimension shown on”.
100) Column 15, line 10: delete “coated” and insert --co-acted-- in its place to read “functionally co-acted into”.
101) Column 15, line 17: delete “lavational” and insert --elevational-- in its place to read “side elevational cross”.
102) Column 15, line 22: add a --,-- between --removed-- and --thread-- to read “removed, thread”.
103) Column 15, line 24: delete “.” between --handle-- and --to-- to read “handle to”.
104) Column 15, line 25: delete “off” and insert --of-- in its place to read “hand of an”.
105) Column 15, line 25: delete “and” and insert --an-- in its place to read “operator, an exchange”.
106) Column 15, line 29: delete “and” and insert --an-- in its place to read “provides an easy”.
107) Column 15, line 32: delete “wage” and insert --waste-- in its place to read “biological waste fluid”.
108) Column 15, line 33: delete “in” to read “as 19b”.
109) Column 15, line 36: delete “two” and insert --2-- in its place to read “canister 2 in”.
110) Column 15, line 36: delete “fusions.” and insert --fashion-- in its place to read “ergonomic fashion.”.
111) Column 15, line 42: insert --)-- following --removed-- to read “removed).
112) Column 15, line 48: insert --’-- between the letters ‘t’ and ‘s’ in the word component s to read “component’s”.
113) Column 16, line 39: delete “b-ring” and insert --o-ring-- in its place to read “o-ring”.
114) Column 16, line 53: delete “bee” and insert --been-- in its place to read “having been rotated”.
115) Column 16, line 67: delete “where” and insert --whereby-- in its place to read “point whereby causing”.
116) Column 17, line 1: delete “id” and insert --lid-- in its place to read “of lid 4'”.
117) Column 17, line 5: add a space between --14'-- and --preassembled-- to read “14' preassembled”.
118) Column 18, line 16: insert --with-- between --engaged-- and --handle-- to read “engaged with handle”.
119) Column 18, line 17: delete “if” and insert --in-- in its place to read “6w in a”.
120) Column 18, line 66: delete “weal” and insert --seal-- in its place to read “bottle/lid seal 4a3”.
121) Column 18, line 67: delete “portionsurface” and insert --portion surface-- in its place to read “bearing portion surface 4a9”.
122) Column 19, line 11: delete “an” and insert --and-- in its place to read “2 and lid”.
123) Column 19, line 15: delete “show” and insert --shown-- in its place to read “5 shown up”.
124) Column 19, line 30: delete “Sixteen depicting” and insert --Sheet 16 depicts-- to read “Sheet 16 depicts a”.
125) Column 19, line 46: delete “duals hot” and insert --dual shot-- in its place to read “soft dual shot seal”.

126) Column 19, line 59: delete “show” and insert --shown-- in its place to read “Also shown is”.

127) Column 19, line 61: delete “a” between --is-- and --respectively-- to read “is respectively”.
128) Column 20, line 1: delete “thought” and insert --though-- in its place to read “even though bottle”.
129) Column 20, line 6: delete “sot” and insert --slot-- in its place to read “stand slot bottom”.
130) Column 20, line 47: delete “is” and insert --in-- in its place to read “ system in that”.
131) Column 21, line 15: delete “a” and insert --are-- in its place to read “leads are effected”.
132) Column 21, line 26: delete “point” and insert --points-- in its place to read “contacts points of”.
133) Column 22, line 6: insert --in-- between --seen-- and --21-- to read “seen in 21”.
134) Column 22, line 46: delete “lid/cannier” and insert --lid/canister-- in its place to read “the lid/canister seal”.
135) Column 22, line 50: delete “other” and insert --others-- in its place to read “among others, vertical”.
136) Column 22, line 55: delete “assistance” and add --assist-- in its place to read “to assist in”.
137) Column 23, line 17: delete “five” and insert --5-- in its place to read “locks 5 leveraging”.
138) Column 23, line 43: delete “form” and insert --from-- in its place to read “distance from the”.
139) Column 23, line 43: insert --,-- after centerline to read “centerline,”.
140) Column 23, line 47: insert --and-- between --14h,-- and --the-- to read “14h, and the”.
141) Column 23, line 47: delete “form” and insert --from-- in its place to read “distance from the”.
142) Column 24, line 25: delete “show” and insert --shown-- in its place to read “is shown how”.
143) Column 24, line 26: delete “sized” and insert --sizes-- in its place to read “and sizes may”.
144) Column 24, line 30: delete “dimension” and insert --dimensions-- in its place to read “unsealing dimensions allow”.
145) Column 24, line 31: delete “sized” and insert --sizes-- in its place to read “and sizes into”.
146) Column 24, line 40: delete “and” and insert --an-- in its place to read “for an operator”.
147) Column 24, line 41: delete “places” and insert --placed-- in its place to read “17a placed within”.
148) Column 24, line 48: delete “shows” and insert --shown-- in its place to read “is shown as”.
149) Column 24, line 58: delete “is” and insert --as-- in its place to read “tubing as shown”.
150) Column 24, line 60: delete “initiate” and insert --initiated-- in its place to read “forces initiated by”.
151) Column 25, line 4: delete “to” and insert --,-- to read “canister, holding”.
152) Column 25, line 12: insert “of” between --distances-- and --thread-- to read “distances of thread”.
153) Column 25, line 14: insert --such that they are-- between --heights-- and --are-- to read “heights such that they are”.
154) Column 25, line 20: insert --a-- between --has-- and --slight-- to read “has a slight”.
155) Column 25, line 36: delete “an did” and insert --and lid-- to read “canister 2 and lid 3”.
156) Column 25, line 43: delete “a” and insert --an-- in its place to read “defining an easy”.
157) Column 25, line 50: delete “d” to read “lid 4 and canister 2.”.
158) Column 25, line 58: delete “dimension” and insert --dimensions-- in its place to read “friction dimensions required”.
159) Column 25, line 60: delete “t” and insert --a-- in its place to read “into a plurality”.
160) Column 25, line 62: delete “container. 14 and” and insert --container 14, and-- in its place.
161) Column 25, line 64: insert --.-- at the end of the line 64 to read “stand 3.”.
162) Column 25, line 65: delete “these” and insert --These-- in its place to read “These leads”.
163) Column 26, line 23: delete “d” to read “aaa' a particular”.
164) Column 27, line 50: delete “the” and insert --than-- in its place to read “less than bbb”.

165) Column 28, line 3: delete “shown” and insert --shows-- in its place to read “FIG. 33 shows an”.
166) Column 28, lines 36-37: delete “that as theust” and insert --as that of thrust-- in its place to read “such as that of thrust handle”.
167) Column 28, line 53: delete “tow” and insert --two-- in its place to read “have two inflow”.
168) Column 28, line 54: delete “direction” and insert --directing-- in its place to read “outflows directing vacuum”
169) Column 28, line 58: delete “connection” and insert --connections-- in its place to read “outflow connections may”.
170) Column 28, line 66-67: delete “a” to read “having fluent materials”.

SPE RESPONSE FOR CERTIFICATE OF CORRECTION

Paper No.: _____

DATE : 2/27/11

TO SPE OF : ART UNIT 3761

SUBJECT : Request for Certificate of Correction for Appl. No.: 11787036 Patent No.: 7854729

CofC mailroom date: 2/14/11

Please respond to this request for a certificate of correction within 7 days.

FOR IFW FILES:

Please review the requested changes/corrections as shown in the **COCIN** document(s) in the IFW application image. No new matter should be introduced, nor should the scope or meaning of the claims be changed.

Please complete the response (see below) and forward the completed response to scanning using document code **COCX**.

FOR PAPER FILES:

Please review the requested changes/corrections as shown in the attached certificate of correction. Please complete this form (see below) and forward it with the file to:

Certificates of Correction Branch (CofC)
Randolph Square – 9D10-A
Palm Location 7580

You can fax the Directors/SPE response to 571-270-9990

Certificates of Correction Branch

Lamonte Newsome

Certificates of Correction Branch

571-272-3421

Thank You For Your Assistance

The request for issuing the above-identified correction(s) is hereby:

Note your decision on the appropriate box.

- ☒ **Approved** — **All** changes apply.
- ☐ **Approved in Part** — Specify below which changes **do not** apply.
- ☐ **Denied** — State the reasons for denial below.

Tatyana Zalukaeva , SPE AU 3761

Comments: /Tatyana Zalukaeva/

SPE RESPONSE FOR CERTIFICATE OF CORRECTION

SPE Art Unit

02-11-11

cg

Express Mail Label # EG644815615US to USPTO at zip code 22313-1450 on 02/10/2011

1) Certificate of Express mail-one page.
2) Return receipt post card-one card.
3) PTO/SB/44 Certificate of Correction-7 pages.

Certificate

FEB 15 2011

of Correction

OPAP IAP4 FEB 10 2011 PATENT & TRADEMARK OFFICE

US Patent No:	7,854,729
US Application No:	United States Patent Application Serial No. 11/787,036
Applicants:	Medindica-Pak, Inc./Jack W. Romano
Titled:	Supply Chain Method And Apparatus For Sealing And Unsealing A Vacuum Draw Path
Issue date:	December 21, 2010
Inventor(s):	Jack W. Romano, Adam L. Smith

I, Jack W. Romano do hereby certify that the foregoing documents are being deposited with the United States Postal Service as Express Mail, postage paid, in an envelope addressed to Attn: Certificate of Corrections Branch, Commissioner for Patents, USPTO, Box 1450, Alexandria, VA 22313-1450.

Jack W Romano
Name

Jack W Romano
Signature

EG 644815615 US
Express Mail Label Number

02/10/2011
Date of Deposit

State of Washington)
) SS.
County of King)

On this day personally appeared before me Jack W Romano known to be the individual described in and who executed the written and foregoing instrument, and acknowledged that (they, he, she) signed the same as either (their, his, her) free will and voluntarily act and deed, for the purposes therein mentioned.

Given under my hand and official seal this 10 Day of feb 2011.

Notary Public
State of Washington
SUGHEY OLIVARES
My Appointment Expires Oct 2, 2012

Signature

Sughey Olivares
Printed Name

Notary Public in the State of Washington
Residing at: Kirkland Washington
My commission expires: Oct 2, 2012

PTO/SB/44 (09-07)
Approved for use through 08/31/2013. OMB 0651-0033
U.S. Patent and Trademark Office; U.S. DEPARTMENT OF COMMERCE
Under the Paperwork Reduction Act of 1995, no persons are required to respond to a collection of information unless it displays a valid OMB control number.
(Also Form PTO-1050)

UNITED STATES PATENT AND TRADEMARK OFFICE
CERTIFICATE OF CORRECTION

PATENT NO. : 7,854,729

APPLICATION NO.: 11/787,036

ISSUE DATE : December 21, 2010

INVENTOR(S) : Jack W. Romano, Adam L. Smith

It is certified that an error appears or errors appear in the above-identified patent and that said Letters Patent is hereby corrected as shown below:

1) Abstract line 5: insert 'of' between -amount- and -solid- to read; "amount of solid".
2) Column 1, line 47-48: delete the "." to read "Environmental Protection".
3) Column 1, line 51: deleted -assembled- to read 'year 2010".
4) Column 1, line 56:add an -s- to 'Organization' to read "Organizations".
5) Column 1, line 57: add an -s- to 'organization' to read "organizations".
6) Column 2, line 13: insert 'and' between -durometer- and -should- to read "durometer and should".
7) Column 2, line 26: delete 'assemble' and insert "assembly".
8) Column 2, line 42: delete the second 'in' to read "For example collection".
9) Column 2, line 43: delete 'the y' between -systems- and -should- to read "systems should".
10) Column 2, line 51: delete 'seal' and insert -seals- to read "checking seals must".
11) Column2, line 53: delete 'time' and insert -times- to read "many times the".
12) Column 2, line 55: delete 'time' and insert -times- to read "at times different".
13) Column 3, line 29: delete 'canister' and insert -canisters- to read "collection canisters attached".
14) Column 3, line 46: Insert 'have' between -sometines- and -dificulty- to read "sometimes have difficulty".
15) Column 3, line 51: delete 'container are ore" and insert -containers are more- to read "containers are more".
16) Column 3, line 53: delete 'because' to read "and the".
17) Column 3 line 54: delete 'and' to read "size could".
18) Column 3, line 55: delete 'Al' and insert -al- to read "et. al. discloses".
19) Column 3, line 55: delete 'id' and insert -lid- to read "and lid combination".
20) Column 3, line 56: delete 'only' to read "will separate".
21) Column 3, line 63: delete one of the two words 'ongoing' too read "required onging inventory".
22) Column 3, line 64: delete ',' and insert -and- to read "space and inventory".
23) Column 4, line 1: delete 'Al.' and insert -al.- to read "et. al., discloses".
24) Column 4, line 3: delete 'This' and insert -The- to read "canister. The disadvantages".
25) Column 4, line 6: delete 'plus require' to read "and maintenance requires periodic".
26) Column 4, line 8: insert 'an' between -is- and -additional- to read "is an additional".
27) Column 4, line 9: insert 'such as' between -disadvantages- and -a- to read "disadvantages such as a".
28) Column 4, line 19: delete 'id' and insert -is- between -system- and -delivered- to read "system is delivered".

MAILING ADDRESS OF SENDER (Please do not use customer number below):

Medindica-PaK, Inc.
9701 NE 120th Place
Kirkland, WA 98034

This collection of information is required by 37 CFR 1.322, 1.323, and 1.324. The information is required to obtain or retain a benefit by the public which is to file (and by the USPTO to process) an application. Confidentiality is governed by 35 U.S.C. 122 and 37 CFR 1.14. This collection is estimated to take 1.0 hour to complete, including gathering, preparing, and submitting the completed application form to the USPTO. Time will vary depending upon the individual case. Any comments on the amount of time you require to complete this form and/or suggestions for reducing this burden, should be sent to the Chief Information Officer, U.S. Patent and Trademark Office, U.S. Department of Commerce, P.O. Box 1450, Alexandria, VA 22313-1450. DO NOT SEND FEES OR COMPLETED FORMS TO THIS ADDRESS. **SEND TO: Attention Certificate of Corrections Branch, Commissioner for Patents, P.O. Box 1450, Alexandria, VA 22313-1450.**

If you need assistance in completing the form, call 1-800-PTO-9199 and select option 2.

PTO/SB/44 (09-07)
Approved for use through 08/31/2013. OMB 0651-0033
U.S. Patent and Trademark Office; U.S. DEPARTMENT OF COMMERCE
Under the Paperwork Reduction Act of 1995, no persons are required to respond to a collection of information unless it displays a valid OMB control number.
(Also Form PTO-1050)

UNITED STATES PATENT AND TRADEMARK OFFICE
CERTIFICATE OF CORRECTION

PATENT NO. : 7,854,729

APPLICATION NO.. 11/787,036

ISSUE DATE : December 21, 2010

INVENTOR(S) : Jack W. Romano, Adam L. Smith

It is certified that an error appears or errors appear in the above-identified patent and that said Letters Patent is hereby corrected as shown below:

29) Column 4, line 21: insert 'of' between -tracking- and -a- to read "tracking of a".
30) Column 4, line 22: delete 'liner' and insert -liners- to read "and liners can".
31) Column 4, lline 38: delete 'containers' and insert -container- to read "of container handling".
32) Column 4, line 51: delete 'dies-assembly' and insert -dis-assembly- to read "and dis-assembly features".
33) Column 4, line 56: delete '=' between -that- and -are- to read "that are".
34) Column 4, line 59: delete 'assemble' and insert -assembled- to read "be assembled with".
35) Column 4, line 66: delete'contents' and insert -contends- to read Applicant contends that".
36) Column 5, line 7-8: delete 'container' and insert -containers- to read "delivery containers which".
37) Column 5, line 39: delete 'deposal' and insert -disposal- to read "the disposal chain".
38) Column 5, line 41: delete 'the' and insert -then- to read "and then integrates'.
39) Column 5, line 45: delete 'fabrication' and insert -fabrications- to read "container fabrications applicable".
40) Column 5, line 50-51: delete 'close' and insert -closed- to read "a closed top".
41) Column 5, line 61: delete 'these' and insert -the- to read "of the instant".
42) Column 5, line 63: delete 'and for the' and insert -for- to read "products for waste".
43) Column 6, line 10: delete the second 'the' to read "(unnecessary) need".
44) Column 6, line 12: insert 'associated' between -costs- and -with- to read "costs associated with".
45) Column 6, line 13: delete 'supply and' to read "separate disposal/collection".
46) Column 6, line 16: delete 'side' and insert -chain- to read "disposal chain and".
47) Column 6, line 17-18: delete 'container' and insert -containers- to read "such containers are".
48) Column 6, line 26: insert a comma ',' at the end of line 26 following the word solution.
49) Column 6, line 31: delete 'solution' and insert -solutions- to read "alcohol solutions and".
50) Column 6, line 38: add a comma ',' bewteen -polyethylene- and -polyvinyl-.
51) Column 6, line 49: delete 'container' and insert -contaienrs- to read "Other containers such".
52) Column 6, line 51-52: delete 'suit-able' and insert -suit-ably- to read "function suitably within".
53) Colmun 6, line 66: insert 'blow molded' between -continuous- and -contianers- to read "continuous blow molded containers,"
54) Column 6 line 67 to Column 7, line 1: delete 'const' and insert -cost- to read "been cost effectively".
55) Column 7, line 3: insert 'and do not' between -forces- and -provide- to read "forces and do not provide".
56) Column 7, line 3: delete 'Options' and insert -options- to read "solution options solving".

MAILING ADDRESS OF SENDER (Please do not use customer number below):

Medindica-PaK, Inc.
9701 NE 120th Place
Kirkland, WA 98034

This collection of information is required by 37 CFR 1.322, 1.323, and 1.324. The information is required to obtain or retain a benefit by the public which is to file (and by the USPTO to process) an application. Confidentiality is governed by 35 U.S.C. 122 and 37 CFR 1.14. This collection is estimated to take 1.0 hour to complete, including gathering, preparing, and submitting the completed application form to the USPTO. Time will vary depending upon the individual case. Any comments on the amount of time you require to complete this form and/or suggestions for reducing this burden, should be sent to the Chief Information Officer, U.S. Patent and Trademark Office, U.S. Department of Commerce, P.O. Box 1450, Alexandria, VA 22313-1450. DO NOT SEND FEES OR COMPLETED FORMS TO THIS ADDRESS. SEND TO: **Attention Certificate of Corrections Branch, Commissioner for Patents, P.O. Box 1450, Alexandria, VA 22313-1450.**

If you need assistance in completing the form, call 1-800-PTO-9199 and select option 2.

PTO/SB/44 (09-07)
Approved for use through 08/31/2013. OMB 0651-0033
U.S. Patent and Trademark Office; U.S. DEPARTMENT OF COMMERCE
Under the Paperwork Reduction Act of 1995, no persons are required to respond to a collection of information unless it displays a valid OMB control number.
(Also Form PTO-1050)

UNITED STATES PATENT AND TRADEMARK OFFICE
CERTIFICATE OF CORRECTION

PATENT NO. : 7,854,729

APPLICATION NO.: 11/787,036

ISSUE DATE : December 21, 2010

INVENTOR(S) : Jack W. Romano, Adam L. Smith

It is certified that an error appears or errors appear in the above-identified patent and that said Letters Patent is hereby corrected as shown below:

57) Column 7, line 12: insert 'The' between -facility- and -Present- to read "facility. The present".
58) Column 7, line 22: delete 'and methods' to read "containers for".
59) Column 7, line 23: delete 'to' and insert -of- in its place to read "side of the".
60) Column 7, line 31: delete 'dispose' and insert -disposal- in its place to read "a disposal and".
61) Column 7, line 34: delete 'to' to read "confers options".
62) Column 7, line 46: delete 'this' and insert -thin- in its place to read "relatively thin plastic".
63) Column 7, line 46: delete 'wall' and insert -walls- in its place to read "plastic walls sometimes".
64) Column 7, line 46: add 'to' between -down- and -the- to read "down to the".
65) Column 7, line 58: delete 'I' and insert -in- in its place to read "thickness in these".
66) Column 7, line 58: delete 'hot' and insert -not- in its place to read "are not generally".
67) Column 7, line 67: delete 'sheet' and insert -sheets- in its place to read "plastic sheets to".
68) Column 8, line 6: delete 'to' and insert -the- in its place to read "connect the container".
69) Column 8, line 7: insert 'a' between -whereby- and -container- to read "whereby a container".
70) Column 8, line 11: delete 'with' and insert -which- in its place to read "pressures which provides".
71) Column 8, line 37: delete 'interpose' and insert -interposed- in its placed to read "is interposed peripherally".
72) Column 9, line 17: insert 'is to orient a' between -invention- and -liquid- to read "invention is to orient a".
73) Column 9, line 28: insert 'is in' between -and- and -flow- to read "and is in flow".
74) Column 9, line 67: delete 'container' and insert -contaienrs- in its place to read "collection containers within".
75) Column 10, line 14: delete 'positing" and insert -positioning- in its place to read "comprises positioning a".
76) Column 10, line 21: insert 'in' between -is- and -position- to read "is in position".
77) Column 10, line 28: insert 'with respect' bewteen -downstream- and -to- to read "downstream with respect to".
78) Column 10, line 66: delete 'a' to read "with waste".
79) Column 10, line 66: delete 'the' to read "collecting waste".
80) Column 11, line 67: delete 'salability" and insert -sealability- in its place to read "a sealability of".
81) Column 12, line 26: delete 'toylid' and insert -to lid- in its place to read "attached to lid 4".
82) Column 12, line 32: delete 'show' and insert -shwon- in its place to read "are shown sealed".
83) Column 12, line 55: delete 'process' and insert -processed- in its place to read "is processed into".

MAILING ADDRESS OF SENDER (Please do not use customer number below):

Medindica-PaK, Inc.
9701 NE 120th Place
Kirkland, WA 98034

This collection of information is required by 37 CFR 1.322, 1.323, and 1.324. The information is required to obtain or retain a benefit by the public which is to file (and by the USPTO to process) an application. Confidentiality is governed by 35 U.S.C. 122 and 37 CFR 1.14. This collection is estimated to take 1.0 hour to complete, including gathering, preparing, and submitting the completed application form to the USPTO. Time will vary depending upon the individual case. Any comments on the amount of time you require to complete this form and/or suggestions for reducing this burden, should be sent to the Chief Information Officer, U.S. Patent and Trademark Office, U.S. Department of Commerce, P.O. Box 1450, Alexandria, VA 22313-1450. DO NOT SEND FEES OR COMPLETED FORMS TO THIS ADDRESS. SEND TO: **Attention Certificate of Corrections Branch, Commissioner for Patents, P.O. Box 1450, Alexandria, VA 22313-1450.**

If you need assistance in completing the form, call 1-800-PTO-9199 and select option 2.

PTO/SB/44 (09-07)
Approved for use through 08/31/2013. OMB 0651-0033
U.S. Patent and Trademark Office; U.S. DEPARTMENT OF COMMERCE
Under the Paperwork Reduction Act of 1995, no persons are required to respond to a collection of information unless it displays a valid OMB control number.
(Also Form PTO-1050)

UNITED STATES PATENT AND TRADEMARK OFFICE
CERTIFICATE OF CORRECTION

PATENT NO. : 7,854,729

APPLICATION NO.: 11/787,036

ISSUE DATE : December 21, 2010

INVENTOR(S) : Jack W. Romano, Adam L. Smith

It is certified that an error appears or errors appear in the above-identified patent and that said Letters Patent is hereby corrected as shown below:

84) Column 12, line 56: delete 'process' and insert -processed- in its place to read "is processed into".
85) Column 13, line 19: insert 'with' between -contacts- and -container- to read "contacts with container".
86) Column 13, line 27: delete 'and' and insert -an- in its place to read "comprises an easy".
87) Column 13, line 29: insert 'way' between -easy- and -to- to read "easy way to".
88) Column 13, line 34: delete 'Figure' and insert -Figures- in its place to read "in Figures on".
89) Column 13, line 42: delete '124' and insert -14- in its place to read "container 14 and".
90) Column 13, line 56: delete 'and' and insert -an- in its place to read "shows an exploded".
91) Column 14, line 25: delete 'and' and insert -as- in its place to read "22 as well".
92) Column 14, line 34: delete 'lack' and insert -lock- in its place to read "of lock 5".
93) Column 14, line 45: delete 'g' to read "depicting its".
94) Column 14, line 46: delete 'a' to read " depicting dimensions".
95) Column 14, line 53: delete 'bottle' and insert -bottom- in its place to read "of bottom of".
96) Column 14, line 53: delete 'so' and insert -of said- in its place to read "bottom of said stand".
97) Column 14, line 60: insert a ',' (comma) between -slot- and -a- to read "slot, a"
98) Column 14, line 62: insert a ',' (comma) between -stand- and -and- to read "stand, and".
99) Column 14, line 62: delete 'showing' and insert -shown- in its place to read "dimension shown on".
100) Column 15, line 10: delete 'coated' and insert -co-acted- in its place to read "functionally co-acted into".
101) Column 15, line 17: delete 'lavational' and insert -elevational- in its place to read "side elevational cross".
102) Column 15, line 22: add a ',' (comma) between -removed- and -thread- to read "removed, thread".
103) Column 15, line 24: delete '.' (the period) between -handle- and -to- to read "handle to".
104) Column 15, line 25: delete 'off' and insert -of- in its place to read "hand of an".
105) Column 15, line 25: delete 'and' and insert -an- in its place to read "operator, an exchange".
106) Column 15, line 29: delete 'and' and insert -an- in its place to read "provides an easy".
107) Column 15, line 32: delete 'wage' and insert -waste- in its place to read "biological waste fluid".
108) Column 15, line 33: delete 'in' to read "as 19b".
109) Column 15, line 36: delete 'two' and insert -2- in its place to read "canister 2 in".
110) Column 15, line 36: delete 'fusions.' and insert -fashion- in its place to read "ergonomic fashion.".
111) Column 15, line 42: insert ')' (a parenthesis)following -removed- to read "removed).

MAILING ADDRESS OF SENDER (Please do not use customer number below):

Medindica-PaK, Inc.
9701 NE 120th Place
Kirkland, WA 98034

This collection of information is required by 37 CFR 1.322, 1.323, and 1.324. The information is required to obtain or retain a benefit by the public which is to file (and by the USPTO to process) an application. Confidentiality is governed by 35 U.S.C. 122 and 37 CFR 1.14. This collection is estimated to take 1.0 hour to complete, including gathering, preparing, and submitting the completed application form to the USPTO. Time will vary depending upon the individual case. Any comments on the amount of time you require to complete this form and/or suggestions for reducing this burden, should be sent to the Chief Information Officer, U.S Patent and Trademark Office, U.S. Department of Commerce, P.O. Box 1450, Alexandria, VA 22313-1450. DO NOT SEND FEES OR COMPLETED FORMS TO THIS ADDRESS. **SEND TO: Attention Certificate of Corrections Branch, Commissioner for Patents, P.O. Box 1450, Alexandria, VA 22313-1450.**

If you need assistance in completing the form, call 1-800-PTO-9199 and select option 2.

PTO/SB/44 (09-07)
Approved for use through 08/31/2013. OMB 0651-0033
U.S. Patent and Trademark Office; U.S. DEPARTMENT OF COMMERCE
Under the Paperwork Reduction Act of 1995, no persons are required to respond to a collection of information unless it displays a valid OMB control number.
(Also Form PTO-1050)

UNITED STATES PATENT AND TRADEMARK OFFICE
CERTIFICATE OF CORRECTION

PATENT NO. : 7,854,729

APPLICATION NO.: 11/787,036

ISSUE DATE : December 21, 2010

INVENTOR(S) : Jack W. Romano, Adam L. Smith

It is certified that an error appears or errors appear in the above-identified patent and that said Letters Patent is hereby corrected as shown below:

112) Column 15, line 48: insert -'- between the letters 't' and 's' in the word component s to read "component's".
113) Column 16, line 39: delete 'b-ring' and insert -o-ring- in its place to read "o-ring".
114) Column 16, line 53: delete 'bee' and insert -been- in its place to read "having been rotated".
115) Column 16, line 67: delete 'where' and insert -whereby- in its place to read "point whereby causing".
116) Column 17, line 1: delete 'id' and insert -lid- in its place to read "of lid 4'".
117) Column 17, line 5: add a space between -14'- and -preassembled- to read " 14' preassembled".
118) Column 18, line 16: insert 'with' between -engaged- and -handle- to read "engaged with handle".
119) Column 18, line 17: delete 'if' and insert -in- in its place to read "6w in a".
120) Column 18, line 66: delete 'weal' and insert -seal- in its place to read "bottle/lid seal 4a3".
121) Column 18, line 67: delete 'portionsurface' and insert -portion surface- in its place to read "bearing portion surface 4a9".
122) Column 19, line 11: delete 'an' and insert -and- in its place to read "2 and lid".
123) Column 19, line 15: delete 'show' and inser -shown- in its place to read "5 shown up".
124) Column 19, line 30: delete 'Sixteen depicting' and insert -Sheet 16 depicts- to read "Sheet 16 depicts a".
125) Column 19, line 46: delete 'duals hot' and insert -dual shot- in its place to read "soft dual shot seal".
126) Column 19, line 59: delete 'show' and insert -shown- in its place to read "Also shown is".
127) Column 19, line 61: delete delete 'a' between -is- and -respectively- to read "is respectively".
128) Column 20, line 1: delete 'thought' and insert -though- in its place to read "even though bottle".
129) Column 20, line 6: delete 'sot' and insert -slot- in its place to read "stand slot bottom'.
130) Column 20, line 47: delete 'is' and insert -in- in its place to read " system in that".
131) Column 21, line 15: delete 'a' and insert -are- in its place to read "leads are effected".
132) Column 21, line 26: delete 'point' and insert -points- in its place to read "contacts points of".
133) Column 22, line 6: insert 'in' between -seen- and -21- to read "seen in 21".
134) Column 22, line 46: delete 'lid/cannier' and insert -lid/cannister- in its place to read "the lid/cannister seal".
135) Column 22, line 50: delete 'other' and insert -others- in its place to read "among others, vertical".
136) Column 22, line 55: delete 'assistance' and add -assist- in its place to read "to assist in".
137) Column 23, line 17: delete 'five' and insert -5- in its place to read "locks 5 leveraging".

MAILING ADDRESS OF SENDER (Please do not use customer number below):

Medindica-PaK, Inc.
9701 NE 120th Place
Kirkland, WA 98034

This collection of information is required by 37 CFR 1.322, 1.323, and 1.324. The information is required to obtain or retain a benefit by the public which is to file (and by the USPTO to process) an application. Confidentiality is governed by 35 U.S.C. 122 and 37 CFR 1.14. This collection is estimated to take 1.0 hour to complete, including gathering, preparing, and submitting the completed application form to the USPTO. Time will vary depending upon the individual case. Any comments on the amount of time you require to complete this form and/or suggestions for reducing this burden, should be sent to the Chief Information Officer, U.S. Patent and Trademark Office, U.S. Department of Commerce, P.O. Box 1450, Alexandria, VA 22313-1450. DO NOT SEND FEES OR COMPLETED FORMS TO THIS ADDRESS. **SEND TO: Attention Certificate of Corrections Branch, Commissioner for Patents, P.O. Box 1450, Alexandria, VA 22313-1450.**

If you need assistance in completing the form, call 1-800-PTO-9199 and select option 2.

PTO/SB/44 (09-07)
Approved for use through 08/31/2013. OMB 0651-0033
U.S. Patent and Trademark Office; U.S. DEPARTMENT OF COMMERCE
Under the Paperwork Reduction Act of 1995, no persons are required to respond to a collection of information unless it displays a valid OMB control number.
(Also Form PTO-1050)

UNITED STATES PATENT AND TRADEMARK OFFICE
CERTIFICATE OF CORRECTION

PATENT NO. : 7,854,729

APPLICATION NO.: 11/787,036

ISSUE DATE : December 21, 2010

INVENTOR(S) : Jack W. Romano, Adam L. Smith

It is certified that an error appears or errors appear in the above-identified patent and that said Letters Patent is hereby corrected as shown below:

138) Column 23, line 43: delete 'form' and insert -from- in its place to read "distance from the".
139) Column 23, line 43: insert ',' after centerline to read "centerline,".
140) Column 23, line 47: insert 'and' between -14h,- and -the- to read "14h, and the".
141) Column 23, line 47: delete 'form' and insert -from- in its place to read "distance from the".
142) Column 24, line 25: delete 'show' and insert -shown- in its place to read "is shown how".
143) Column 24, line 26: delete 'sized' and insert -sizes- in its place to read "and sizes may".
144) Column 24, line 30: delete 'dimension' and insert -dimensions- in its place to read "unsealing dimensions allow".
145) Column 24, line 31: delete 'sized' and insert -sizes- in its place to read "and sizes into".
146) Column 24, line 40: delete 'and' and insert -an- in its place to read "for an operator".
147) Column 24, line 41: delete 'places' and insert -placed- in its place to read "17a placed within".
148) Column 24, line 48: delete 'shows' and insert -shown- in its place to read "is shown as".
149) Column 24, line 58: delete 'is' and insert -as- in its place to read "tubing as shown".
150) Column 24, line 60: delete 'initiate' and insert -initiated- in its place to read "forces initiated by".
151) Column 25, line 4: delete 'to' and insert -,- (a comma) to read "canister, holding".
152) Column 25, line 12; insert 'of' between -distances- and -thread- to read "distances of thread".
153) Column 25, line 14: insert 'such that they are' between -heights- and -are- to read "heights such that they are".
154) Column 25, line 20: insert 'a' between -has- and -slight- to read "has a slight".
155) Column 25, line 36: delete 'an did' and isert -and lid- to read "canister 2 and lid 3".
156) Column 25, line 43: delete 'a' and insert -an- in its place to read "defining an easy".
157) Column 25 line 50: delete 'd' to read "lid 4 and canister 2.".
158) Column 25, line 58: delete 'dimension' and insert -dimensions- in its place to read "friction dimensions required".
159) Column 25, line 60: delete 't' and insert -a- in its place to read "into a plurality".
160) Column 25, line 62: delete 'container. 14 and' and insert -container 14, and- in its place.
161) Column 25, line 64: insert '.' at the end of the line 64 to read "stand 3.".
162) Column 25, line 65: delete 'these' and insert -These- in its place to read "These leads".
163) Column 26, line 23: delete 'd' to read "aaa' a particular".

MAILING ADDRESS OF SENDER (Please do not use customer number below):

Medindica-PaK, Inc.
9701 NE 120th Place
Kirkland, WA 98034

This collection of information is required by 37 CFR 1.322, 1.323, and 1.324. The information is required to obtain or retain a benefit by the public which is to file (and by the USPTO to process) an application. Confidentiality is governed by 35 U.S.C. 122 and 37 CFR 1.14. This collection is estimated to take 1.0 hour to complete, including gathering, preparing, and submitting the completed application form to the USPTO. Time will vary depending upon the individual case. Any comments on the amount of time you require to complete this form and/or suggestions for reducing this burden, should be sent to the Chief Information Officer, U.S. Patent and Trademark Office, U.S. Department of Commerce, P.O. Box 1450, Alexandria, VA 22313-1450. DO NOT SEND FEES OR COMPLETED FORMS TO THIS ADDRESS. **SEND TO: Attention Certificate of Corrections Branch, Commissioner for Patents, P.O. Box 1450, Alexandria, VA 22313-1450.**

If you need assistance in completing the form, call 1-800-PTO-9199 and select option 2.

PTO/SB/44 (09-07)
Approved for use through 08/31/2013. OMB 0651-0033
U.S. Patent and Trademark Office; U.S. DEPARTMENT OF COMMERCE
Under the Paperwork Reduction Act of 1995, no persons are required to respond to a collection of information unless it displays a valid OMB control number.
(Also Form PTO-1050)

UNITED STATES PATENT AND TRADEMARK OFFICE
CERTIFICATE OF CORRECTION

PATENT NO. : 7,854,729

APPLICATION NO.: 11/787,036

ISSUE DATE : December 21, 2010

INVENTOR(S) : Jack W. Romano, Adam L. Smith

It is certified that an error appears or errors appear in the above-identified patent and that said Letters Patent is hereby corrected as shown below:

164) Column 27, line 50: delete 'the' and insert -than- in its place to read "less than bbb'".
165) Column 28, line 3: delete 'shown' and insert -shows- in its place to read "FIG. 33 shows an".
166) Column 28,, lines 36-37: delete 'that as theust' and insert -as that of thrust- in its place to read "such as that of thrust handle".
167) Column 28, line 53: delete 'tow' and insert -two- in its place to read "have two inflow".
168) Column 28, line 54: delete 'direction' and insert -directing- in its place to read "outflows directing vacuum".
169) Column 28, line 58: delete 'connection' and insert -connections- in its place to read "outflow connections may".
170) Column 28, line 66-67: delete 'a' to read "having fluent materials".

MAILING ADDRESS OF SENDER (Please do not use customer number below):

Medindica-PaK, Inc.
9701 NE 120th Place
Kirkland, WA 98034

This collection of information is required by 37 CFR 1.322, 1.323, and 1.324. The information is required to obtain or retain a benefit by the public which is to file (and by the USPTO to process) an application. Confidentiality is governed by 35 U.S.C. 122 and 37 CFR 1.14. This collection is estimated to take 1.0 hour to complete, including gathering, preparing, and submitting the completed application form to the USPTO. Time will vary depending upon the individual case. Any comments on the amount of time you require to complete this form and/or suggestions for reducing this burden, should be sent to the Chief Information Officer, U.S. Patent and Trademark Office, U.S. Department of Commerce, P.O. Box 1450, Alexandria, VA 22313-1450. DO NOT SEND FEES OR COMPLETED FORMS TO THIS ADDRESS. SEND TO: **Attention Certificate of Corrections Branch, Commissioner for Patents, P.O. Box 1450, Alexandria, VA 22313-1450.**

If you need assistance in completing the form, call 1-800-PTO-9199 and select option 2.

UNITED STATES PATENT AND TRADEMARK OFFICE

Commissioner for Patents
United States Patent and Trademark Office
P.O. Box 1450
Alexandria, VA 22313-1450
www.uspto.gov

MAILED
JAN 11 2012
OFFICE OF PETITIONS

THE JACKSON PATENT GROUP
1500 FOREST AVENUE, SUITE 212
RICHMOND, VA 23229

In re Patent No. 7,964,266	:	
Issued: June 21, 2011	:	
Application No. 11/787,094	:	NOTICE
Filed: April 13, 2007	:	
Attorney Docket No.: 1857(ITS)	:	

This is a notice regarding your request for acceptance of a fee deficiency submission under 37 CFR 1.28, filed November 21, 2011.

The Office no longer investigates or rejects original or reissue patent under 37 CFR 1.56. **1098 Off. Gaz. Pat. Office 502 (January 3, 1989)**. Therefore, nothing in this Notice is intended to imply that an investigation was done.

Your fee deficiency submission under 37 CFR 1.28 is hereby **ACCEPTED**.

This patent is no longer entitled to small entity status. Accordingly, all future fees paid in this patent must be paid at the large entity rate.

/SDB/

Sherry D. Brinkley
Petitions Examiner
Office of Petitions

UNITED STATES PATENT AND TRADEMARK OFFICE

Commissioner for Patents
United States Patent and Trademark Office
P.O. Box 1450
Alexandria, VA 22313-1450
www.uspto.gov

KILPATRICK TOWNSEND & STOCKTON LLP
TWO EMBARCADERO CENTER
EIGHTH FLOOR
SAN FRANCISCO CA 94111-3834

MAILED

JUN 08 2011

OFFICE OF PETITIONS

In re Application of	:	
De Villiers et al.	:	DECISION ON PETITION
Application No. 11/787,110	:	TO WITHDRAW
Filed: May 12, 2009	:	FROM RECORD
Attorney Docket No. 022031-000311US	:	

This is a decision on the Request to Withdraw as attorney or agent of record under 37 C.F.R. § 1.36(b), filed May 18, 2011.

The request is **NOT APPROVED**.

The Office will only accept correspondence address changes to the most current address information provided for the assignee of the entire interest *who properly became of record under 37 CFR 3.71,* or, if no assignee of the entire interest has properly been made of record, the most current address information provided for the first named inventor. 37 CFR 3.71(c) states:

An assignee becomes of record either in a national patent application or a reexamination proceeding by filing a statement in compliance with § 3.73(b) that is signed by a party who is authorized to act on behalf of the assignee.

According to a review of current USPTO records petitioner has not requested the address be changed to a properly recorded assignee or the first listed inventor. The Customer Number 21971 is neither the first named inventor nor the assignee who properly became of record under 37 CFR 3.71 As such, all future communications from the Office will continue to be directed to the above-listed address until otherwise notified by applicant.

Currently, there is no outstanding Office action that requires a reply.

Telephone inquires concerning this decision should be directed to the undersigned at (571) 272-7751.

/Joan Olszewski/
Joan Olszewski
Petitions Examiner
Office of Petitions

UNITED STATES PATENT AND TRADEMARK OFFICE

Commissioner for Patents
United States Patent and Trademark Office
P.O. Box 1450
Alexandria, VA 22313-1450
www.uspto.gov

STERNE, KESSLER, GOLDSTEIN & FOX P.L.L.C.
1100 NEW YORK AVENUE, N.W.
WASHINGTON DC 20005

MAILED

SEP 06 2011

OFFICE OF PETITIONS

In re Application of	:	
S. Rao Cherukuri	:	
Application No. 11/787,115	:	DECISION ON PETITION
Filed: April 12, 2007	:	TO WITHDRAW
Attorney Docket No.	:	FROM RECORD
2922.0030001/RWE/SLE	:	

This is a decision on the Request to Withdraw as attorney or agent of record under 37 CFR § 1.36(b), filed August 17, 2011.

The request is **APPROVED**.

A grantable request to withdraw as attorney/agent of record must be signed by every attorney/agent seeking to withdraw or contain a clear indication that one attorney is signing on behalf of another/others. The Office requires the practitioner(s) requesting withdrawal to certify that he, she, or they have: (1) given reasonable notice to the client, prior to the expiration of the response period, that the practitioner(s) intends to withdraw from employment; (2) delivered to the client or a duly authorized representative of the client all papers and property (including funds) to which the client is entitled; and (3) notified the client of any responses that may be due and the time frame within which the client must respond , pursuant to 37 CFR 10.40.

The request was signed by Robert W. Esmond on behalf of all attorneys of record who are associated with Customer Number 26111

All attorneys/agents associated with Customer Number 26111 have been withdrawn. Applicant is reminded that there is no attorney of record at this time.

The correspondence address of record has been changed and all future correspondence will be directed to the assignee of the entire interest at the address indicated below.

There is no outstanding Office action mailed that requires a reply from the applicant.

Telephone inquiries concerning this decision should be directed to the undersigned at 571-272-4584.

JoAnne Burke
Petitions Examiner
Office of Petitions

cc: Capricorn Pharma, Inc.,
6900 English Muffin Way, Unit A
Frederick, MD 21703

UNITED STATES PATENT AND TRADEMARK OFFICE

UNITED STATES DEPARTMENT OF COMMERCE
United States Patent and Trademark Office
Address: COMMISSIONER FOR PATENTS
P.O. Box 1450
Alexandria, Virginia 22313-1450
www.uspto.gov

APPLICATION NUMBER	FILING OR 371(C) DATE	FIRST NAMED APPLICANT	ATTY. DOCKET NO./TITLE
11/787,115	04/12/2007	S. Rao Cherukuri	2922.0030001/RWE/SLE

CONFIRMATION NO. 1206

26111
STERNE, KESSLER, GOLDSTEIN & FOX P.L.L.C.
1100 NEW YORK AVENUE, N.W.
WASHINGTON, DC 20005

POWER OF ATTORNEY NOTICE

OC000000049681976

Date Mailed: 09/06/2011

NOTICE REGARDING CHANGE OF POWER OF ATTORNEY

This is in response to the Power of Attorney filed 08/17/2011.

- The withdrawal as attorney in this application has been accepted. Future correspondence will be mailed to the new address of record. 37 CFR 1.33.

/jlburke/

Office of Data Management, Application Assistance Unit (571) 272-4000, or (571) 272-4200, or 1-888-786-0101

UNITED STATES PATENT AND TRADEMARK OFFICE

Commissioner for Patents
United States Patent and Trademark Office
P.O. Box 1450
Alexandria, VA 22313-1450
www.uspto.gov

VAN PELT, YI & JAMES LLP
10050 N. FOOTHILL BLVD #200
CUPERTINO CA 95014

MAILED

AUG 02 2010

OFFICE OF PETITIONS

In re Application of	:	
Kwok Alfred YEUNG et al.	:	
Application No. 11/787,230	:	DECISION ON PETITION
Filed: April 13, 2007	:	
Attorney Docket No. LINKP012	:	

This is a decision on the renewed petition under 37 CFR 1.182, filed, June 01, 2010, to change the name of inventor "Kwok Alfred Yeung" to – "Kwok W. Yeung" --.

The petition is **GRANTED**.

Office records have been updated to reflect the inventor's change of name. A corrected Filing Receipt, which reflects the inventor's change of name, accompanies this decision on petition.

Any questions concerning this matter may be directed to Michelle R. Eason at (571) 272-4231. Any questions concerning the examination procedures or status of the application should be directed to the Technology Center.

This application is being referred to Technology Center AU 2627 for examination in due course.

Thurman K. Page
Petitions Examiner
Office of Petitions

ATTACHMENT: Corrected Filing Receipt

UNITED STATES PATENT AND TRADEMARK OFFICE

UNITED STATES DEPARTMENT OF COMMERCE
United States Patent and Trademark Office
Address: COMMISSIONER FOR PATENTS
P.O. Box 1450
Alexandria, Virginia 22313-1450
www.uspto.gov

APPLICATION NUMBER	FILING or 371(c) DATE	GRP ART UNIT	FIL FEE REC'D	ATTY.DOCKET.NO	TOT CLAIMS	IND CLAIMS
11/787,230	04/13/2007	2627	1630	LINKP012	30	3

CONFIRMATION NO. 1188

CORRECTED FILING RECEIPT

21912
VAN PELT, YI & JAMES LLP
10050 N. FOOTHILL BLVD #200
CUPERTINO, CA 95014

OC000000042853830

Date Mailed: 08/02/2010

Receipt is acknowledged of this non-provisional patent application. The application will be taken up for examination in due course. Applicant will be notified as to the results of the examination. Any correspondence concerning the application must include the following identification information: the U.S. APPLICATION NUMBER, FILING DATE, NAME OF APPLICANT, and TITLE OF INVENTION. Fees transmitted by check or draft are subject to collection. Please verify the accuracy of the data presented on this receipt. **If an error is noted on this Filing Receipt, please submit a written request for a Filing Receipt Correction. Please provide a copy of this Filing Receipt with the changes noted thereon. If you received a "Notice to File Missing Parts" for this application, please submit any corrections to this Filing Receipt with your reply to the Notice. When the USPTO processes the reply to the Notice, the USPTO will generate another Filing Receipt incorporating the requested corrections**

Applicant(s)

Kwok W. Yeung, Milpitas, CA;
Kai Keung Chan, Fremont, CA;
Paul K. Lai, San Jose, CA;

Assignment For Published Patent Application

Link_A_Media Devices Corporation

Power of Attorney: The patent practitioners associated with Customer Number 21912

Domestic Priority data as claimed by applicant

Foreign Applications

If Required, Foreign Filing License Granted: 05/11/2007

The country code and number of your priority application, to be used for filing abroad under the Paris Convention, is **US 11/787,230**

Projected Publication Date: Request for Non-Publication Acknowledged

Non-Publication Request: Yes

Early Publication Request: No

Title

Pad bit injection during read operation to improve format efficiency

Preliminary Class

360

PROTECTING YOUR INVENTION OUTSIDE THE UNITED STATES

Since the rights granted by a U.S. patent extend only throughout the territory of the United States and have no effect in a foreign country, an inventor who wishes patent protection in another country must apply for a patent in a specific country or in regional patent offices. Applicants may wish to consider the filing of an international application under the Patent Cooperation Treaty (PCT). An international (PCT) application generally has the same effect as a regular national patent application in each PCT-member country. The PCT process **simplifies** the filing of patent applications on the same invention in member countries, but **does not result** in a grant of "an international patent" and does not eliminate the need of applicants to file additional documents and fees in countries where patent protection is desired.

Almost every country has its own patent law, and a person desiring a patent in a particular country must make an application for patent in that country in accordance with its particular laws. Since the laws of many countries differ in various respects from the patent law of the United States, applicants are advised to seek guidance from specific foreign countries to ensure that patent rights are not lost prematurely.

Applicants also are advised that in the case of inventions made in the United States, the Director of the USPTO must issue a license before applicants can apply for a patent in a foreign country. The filing of a U.S. patent application serves as a request for a foreign filing license. The application's filing receipt contains further information and guidance as to the status of applicant's license for foreign filing.

Applicants may wish to consult the USPTO booklet, "General Information Concerning Patents" (specifically, the section entitled "Treaties and Foreign Patents") for more information on timeframes and deadlines for filing foreign patent applications. The guide is available either by contacting the USPTO Contact Center at 800-786-9199, or it can be viewed on the USPTO website at http://www.uspto.gov/web/offices/pac/doc/general/index.html.

For information on preventing theft of your intellectual property (patents, trademarks and copyrights), you may wish to consult the U.S. Government website, http://www.stopfakes.gov. Part of a Department of Commerce initiative, this website includes self-help "toolkits" giving innovators guidance on how to protect intellectual property in specific countries such as China, Korea and Mexico. For questions regarding patent enforcement issues, applicants may call the U.S. Government hotline at 1-866-999-HALT (1-866-999-4158).

LICENSE FOR FOREIGN FILING UNDER

Title 35, United States Code, Section 184

Title 37, Code of Federal Regulations, 5.11 & 5.15

GRANTED

The applicant has been granted a license under 35 U.S.C. 184, if the phrase "IF REQUIRED, FOREIGN FILING LICENSE GRANTED" followed by a date appears on this form. Such licenses are issued in all applications where the conditions for issuance of a license have been met, regardless of whether or not a license may be required as

set forth in 37 CFR 5.15. The scope and limitations of this license are set forth in 37 CFR 5.15(a) unless an earlier license has been issued under 37 CFR 5.15(b). The license is subject to revocation upon written notification. The date indicated is the effective date of the license, unless an earlier license of similar scope has been granted under 37 CFR 5.13 or 5.14.

This license is to be retained by the licensee and may be used at any time on or after the effective date thereof unless it is revoked. This license is automatically transferred to any related applications(s) filed under 37 CFR 1.53(d). This license is not retroactive.

The grant of a license does not in any way lessen the responsibility of a licensee for the security of the subject matter as imposed by any Government contract or the provisions of existing laws relating to espionage and the national security or the export of technical data. Licensees should apprise themselves of current regulations especially with respect to certain countries, of other agencies, particularly the Office of Defense Trade Controls, Department of State (with respect to Arms, Munitions and Implements of War (22 CFR 121-128)); the Bureau of Industry and Security, Department of Commerce (15 CFR parts 730-774); the Office of Foreign AssetsControl, Department of Treasury (31 CFR Parts 500+) and the Department of Energy.

NOT GRANTED

No license under 35 U.S.C. 184 has been granted at this time, if the phrase "IF REQUIRED, FOREIGN FILING LICENSE GRANTED" DOES NOT appear on this form. Applicant may still petition for a license under 37 CFR 5.12, if a license is desired before the expiration of 6 months from the filing date of the application. If 6 months has lapsed from the filing date of this application and the licensee has not received any indication of a secrecy order under 35 U.S.C. 181, the licensee may foreign file the application pursuant to 37 CFR 5.15(b).

UNITED STATES PATENT AND TRADEMARK OFFICE

Commissioner for Patents
United States Patent and Trademark Office
P.O. Box 1450
Alexandria, VA 22313-1450
www.uspto.gov

STOLOWITZ FORD COWGER LLP
621 SW MORRISON ST.
SUITE 600
PORTLAND, OR 97205

MAILED
MAR 03 2011
OFFICE OF PETITIONS

In re Application of	:	
Johan M. Grundlingh	:	DECISION NOTING JOINDER OF
Application No. 11/787,231	:	INVENTOR AND PETITION
Filed: April 12, 2007	:	UNDER 37 CFR 1.47(b)
Attorney Docket No. 9931-0111	:	

Papers filed on December 28, 2010 includes an executed supplemental reissue declaration under 37 CFR 1.175 signed by previously non-signing inventor, Johan M. Grundlingh, in compliance with 37 CFR 1.63.

The petition is **DISMISSED AS MOOT**.

In view of the joinder of the inventor, further consideration under § 1.47(b) is not necessary. This application does not have any Rule 1.47 status and no such status should appear on the record of this file. This application need not be returned to this Office for any further consideration under 37 CFR 1.47(b).

This matter is being referred to Technology Center AU 2817 for examination in due course.

Telephone inquiries should be directed to Irvin Dingle at (571) 272-3210.

David Bucci
Petitions Examiner
Office of Petitions

UNITED STATES PATENT AND TRADEMARK OFFICE

Commissioner for Patents
United States Patent and Trademark Office
P.O. Box 1450
Alexandria, VA 22313-1450
www.uspto.gov

KAMEN GEORGE KAMENOV
2470 FULTON ST. #5
SAN FRANCISCO CA 94118

MAILED
JAN 03 2011
OFFICE OF PETITIONS

In re Application of Kamen George Kamenov Application No. 11/787,244 Filed: April 16, 2007 For: VALVELESS ROTARY INTERNAL COMBUSTION ENGINE	: : : : : :	DECISION ON PETITION

This is a decision on the petition, filed August 30, 2010, under 37 CFR 1.181(a) to Withdraw Holding of Abandonment.

The petition under 37 CFR 1.181(a) is **GRANTED**.

The application was held abandoned for failure to timely reply to the nonfinal Office action mailed November 30, 2009.

The Office records show that a reply to the nonfinal Office action was timely received on February 22, 2010 for the above-identified application.

In view of the above, the holding of abandonment is hereby withdrawn and the application restored to pending status.

Telephone inquiries concerning this decision should be directed to the undersigned at (571) 272-3208.

This application is being referred to Technology Center AU 3748 for appropriate action by the Examiner in the normal course of business.

/KOC/
Karen Creasy
Petitions Examiner
Office of Petitions

UNITED STATES PATENT AND TRADEMARK OFFICE

Commissioner for Patents
United States Patent and Trademark Office
P.O. Box 1450
Alexandria, VA 22313-1450
www.uspto.gov

MAILED
APR 13 2011
OFFICE OF PETITIONS

CHARLES W COWARD
1 E SPRUCE
MOORESTOWN, NJ 08057

In re Application of :
Charles W. Coward, et al. :
Application No. 11/787,252 : ON PETITION
Filed: April 16, 2007 :
Attorney Docket No.: NONE :

This is a decision in response to the petition under the provisions of 37 CFR 1.137(b) , filed February 8, 2011 and supplements filed February 14 and February 18, 2011 to revive the above-identified application. This is also in response to the petition filed March 7, 2011 and supplement filed April 4, 2011, requesting withdrawal of the holding of abandonment of the above-identified application under the provisions of 37 CFR 1.181 (no fee).

The petitions are not properly signed in accordance with 37 CFR 1.33(b), as the petitions are signed by one of the two joint inventors.

37 CFR 1.33(b) states that:

Amendments and other papers filed in the application must be signed by:

(1) An attorney or agent of record appointed in compliance with §1.34(b);

(2) A registered attorney or agent not of record who acts in a representative capacity under the provisions of §1.34(a);

(3) The assignee of record of the entire interest, if there is an assignee of record of the entire interest;

(4) An assignee of record of an undivided part interest, and any assignee(s) of the remaining interest and any applicant retaining an interest, if there is an assignee of record of an undivided part interest; or

(5) <u>All of the applicants</u> (§§ 1.42. 1.43 and 1.47) for patent, unless there is an assignee of record of the entire interest and such assignee has taken action in the application in accordance with §§ 3.71 and 3.73. Emphasis added.

An unsigned amendment (or other paper) or one not properly signed by a person having authority to prosecute the application is not entered. This applies, for instance, where the amendment (or other paper) is signed by only one of two applicants and the one signing has not been given a power of attorney by the other applicant.

It is noted that the communication of February 18, 2011, included a request to withdraw the petition under 37 CFR 1.137(b). Accordingly, there will be no further consideration of the petition under 37 CFR 1.137(b).

The petition under 37 CFR 1.137(b) is **DISMISSED**. Unfortunately, the petition under 37 CFR 1.181is also **DISMISSED** at this time.

Any request for reconsideration of this decision as it relates to the petition under 37 CFR 1.181 should be filed within two (2) months from the mail date of this decision. *Note* 37 CFR 1.181(f). The request for reconsideration should include a cover letter entitled "Renewed Petition under 37 CFR 1.181 to Withdraw the Holding of Abandonment," which is properly signed.

Petitioner is reminded that a grantable petition under the provisions 1.181 must include the showing required for non-receipt of an Office communication in accordance with MPEP 711.03(c). See the subheading "Petition to Withdraw Holding of Abandonment Based on Failure to Receive Office Action," and "Withdrawing the Holding of Abandonment When Office Actions Are Not Received," 1156 Official Gazette 53 (November 16, 1993).

As petitioner is a pro-se applicant, the Office understands that petitioner may not keep a formal docket record system for his correspondence. Nevertheless, petitioner must provide some sort of showing explaining the manner in which petitioner receives mail from the USPTO, maintains files for patent matters, and treats mail received for such matter. For applicant's convenience, a copy of the Office action of July 8, 2010 is enclosed.

Further correspondence with respect to this matter should be delivered through one of the following mediums:

By mail: Mail Stop PETITIONS
Commissioner for Patents
Post Office Box 1450
Alexandria, VA 22313-1450

By hand: Customer Service Window
Mail Stop Petitions
Randolph Building
401 Dulany Street
Alexandria, VA 22314

By fax: (571) 273-8300
ATTN: Office of Petitions

By Internet: EFS-Web[1]

Any questions concerning this matter may be directed to the undersigned at (571) 272-3204.

/SDB/

Sherry D. Brinkley
Petitions Examiner
Office of Petitions

Enclosure – July 8, 2010 Office action

1 www.uspto.gov/ebc/efs_help.html (for help using EFS-Web call the Patent Electronic Business Center at (866) 217-9197)

UNITED STATES PATENT AND TRADEMARK OFFICE

UNITED STATES DEPARTMENT OF COMMERCE
United States Patent and Trademark Office
Address: COMMISSIONER FOR PATENTS
P.O. Box 1450
Alexandria, Virginia 22313-1450
www.uspto.gov

APPLICATION NO.	FILING DATE	FIRST NAMED INVENTOR	ATTORNEY DOCKET NO.	CONFIRMATION NO.
11/787,252	04/16/2007	Charles W. Coward		2225

7590 07/08/2010
CHARLES W COWARD
1 E SPRUCE
MOORESTOWN, NJ 08057

EXAMINER
KOSANOVIC, HELENA

ART UNIT	PAPER NUMBER
3749	

MAIL DATE	DELIVERY MODE
07/08/2010	PAPER

Please find below and/or attached an Office communication concerning this application or proceeding.

The time period for reply, if any, is set in the attached communication.

Office Action Summary	Application No.	Applicant(s)
	11/787,252	COWARD ET AL.
	Examiner	Art Unit
	HELENA KOSANOVIC	3749

-- The MAILING DATE of this communication appears on the cover sheet with the correspondence address --

Period for Reply

A SHORTENED STATUTORY PERIOD FOR REPLY IS SET TO EXPIRE 3 MONTH(S) OR THIRTY (30) DAYS, WHICHEVER IS LONGER, FROM THE MAILING DATE OF THIS COMMUNICATION.

- Extensions of time may be available under the provisions of 37 CFR 1.136(a). In no event, however, may a reply be timely filed after SIX (6) MONTHS from the mailing date of this communication.
- If NO period for reply is specified above, the maximum statutory period will apply and will expire SIX (6) MONTHS from the mailing date of this communication.
- Failure to reply within the set or extended period for reply will, by statute, cause the application to become ABANDONED (35 U.S.C. § 133). Any reply received by the Office later than three months after the mailing date of this communication, even if timely filed, may reduce any earned patent term adjustment. See 37 CFR 1.704(b).

Status

1)☒ Responsive to communication(s) filed on 23 June 2010.

2a)☐ This action is **FINAL**. 2b)☒ This action is non-final.

3)☐ Since this application is in condition for allowance except for formal matters, prosecution as to the merits is closed in accordance with the practice under *Ex parte Quayle*, 1935 C.D. 11, 453 O.G. 213.

Disposition of Claims

4)☒ Claim(s) 1-16 is/are pending in the application.

4a) Of the above claim(s) _____ is/are withdrawn from consideration.

5)☐ Claim(s) _____ is/are allowed.

6)☒ Claim(s) 1-16 is/are rejected.

7)☐ Claim(s) _____ is/are objected to.

8)☐ Claim(s) _____ are subject to restriction and/or election requirement.

Application Papers

9)☐ The specification is objected to by the Examiner.

10)☐ The drawing(s) filed on _____ is/are: a)☐ accepted or b)☐ objected to by the Examiner.

Applicant may not request that any objection to the drawing(s) be held in abeyance. See 37 CFR 1.85(a).

Replacement drawing sheet(s) including the correction is required if the drawing(s) is objected to. See 37 CFR 1.121(d).

11)☐ The oath or declaration is objected to by the Examiner. Note the attached Office Action or form PTO-152.

Priority under 35 U.S.C. § 119

12)☐ Acknowledgment is made of a claim for foreign priority under 35 U.S.C. § 119(a)-(d) or (f).

a)☐ All b)☐ Some * c)☐ None of:

1.☐ Certified copies of the priority documents have been received.

2.☐ Certified copies of the priority documents have been received in Application No. _____.

3.☐ Copies of the certified copies of the priority documents have been received in this National Stage application from the International Bureau (PCT Rule 17.2(a)).

* See the attached detailed Office action for a list of the certified copies not received.

Attachment(s)

1) ☐ Notice of References Cited (PTO-892)

2) ☐ Notice of Draftsperson's Patent Drawing Review (PTO-948)

3) ☐ Information Disclosure Statement(s) (PTO/SB/08) Paper No(s)/Mail Date _____.

4) ☐ Interview Summary (PTO-413) Paper No(s)/Mail Date. _____ .

5) ☐ Notice of Informal Patent Application

6) ☐ Other: _____.

DETAILED ACTION

Continued Examination Under 37 CFR 1.114

A request for continued examination under 37 CFR 1.114, including the fee set forth in 37 CFR 1.17(e), was filed in this application after final rejection. Since this application is eligible for continued examination under 37 CFR 1.114, and the fee set forth in 37 CFR 1.17(e) has been timely paid, the finality of the previous Office action has been withdrawn pursuant to 37 CFR 1.114. Applicant's submission filed on 6/23/10 has been entered.

Claim Rejections - 35 USC § 102

The following is a quotation of the appropriate paragraphs of 35 U.S.C. 102 that form the basis for the rejections under this section made in this Office action:

> A person shall be entitled to a patent unless –
>
> (b) the invention was patented or described in a printed publication in this or a foreign country or in public use or on sale in this country, more than one year prior to the date of application for patent in the United States.

1. Claims 1-2 are rejected under 35 U.S.C. 102(b) as being anticipated by Day 3,011,518.

Day teaches the invention:

Regarding claim 1, in an air flow control valve (fig. 4) comprising of a series of expandable air foil profiles 10 (fig. 4), a means of supporting the air flow profiles 20, 7, 6 (fig. 4), a casing enclosing the air foil profiles 6, 7 (fig. 4) and a set of side seals 8 (fig. 4) located at each end of the expanded air foil profiles each side seal being permanently fixed to the interior surface of the casing (fig. 4, elements 8 are attaches to at least

interior side of 6) and each side seal containing an accurate profile 9 (fig. 4) of each expanded blade profile

Regarding claim 2, the side seals being a thick enough (fig. 3) to provide a support of the expandable air foil profiles said support preventing any bypass of the air when the air foil profiles are fully closed against the side seals (col. 2, ll. 64-69).

Claim Rejections - 35 USC § 103

The following is a quotation of 35 U.S.C. 103(a) which forms the basis for all obviousness rejections set forth in this Office action:

> (a) A patent may not be obtained though the invention is not identically disclosed or described as set forth in section 102 of this title, if the differences between the subject matter sought to be patented and the prior art are such that the subject matter as a whole would have been obvious at the time the invention was made to a person having ordinary skill in the art to which said subject matter pertains. Patentability shall not be negatived by the manner in which the invention was made.

2. Claims 3-4 are rejected under 35 U.S.C. 103(a) as being unpatentable over Day 3,011,518 in view of Allan 4,457,336.

Day teaches the invention as discussed above but is not specific about the seal that has the profile such that the amount of compression of the side seals being sufficient to prevent the bypassing of air and is silent about a strip of thin compressible material affixed to the center of each of the air foil vanes and extending the length of each vane profile

Allan teaches:

Regarding claim 3 side seal 70 (fig. 7) being composed of a compressible material and upon full expansion of the profiles 67, 68 (fig. 7) the amount of compression of the side seals being sufficient to prevent the bypassing of air (fig. 7).

Regarding claim 4, a vane seal 81 consisting of a strip of thin compressible material affixed to the center of each of the air foil vanes and extending the length of each vane profile (col. 5, ll. 22-26).

It would have been obvious tone of ordinary skill in the art at the time of the invention to have the Day invention modified with the Allan seal being sufficient to prevent the bypassing of air and with compressible strip attached to the length of the vain in order to prevent more leakage of air between the veins

3. Claims 5-16 are rejected under 35 U.S.C. 103(a) as being unpatentable over Day 3,011,518 in view of Allan 4,457,336 and further in view of Applicant's admission that species are not patentably distinct over the generic claims 1-4.

Response to Arguments

Applicant's arguments filed 6/23/10 have been fully considered but they are not persuasive.

In response to applicant's argument based upon the age of the references, contentions that the reference patents are old are not impressive absent a showing that the art tried and failed to solve the same problem notwithstanding its presumed

knowledge of the references. See *In re Wright*, 569 F.2d 1124, 193 USPQ 332 (CCPA 1977).

In response to applicant's argument that the references fail to show certain features of applicant's invention, it is noted that the features upon which applicant relies (i.e., thick seal, leakage rate) are not recited in the rejected claim(s). Although the claims are interpreted in light of the specification, limitations from the specification are not read into the claims. See *In re Van Geuns*, 988 F.2d 1181, 26 USPQ2d 1057 (Fed. Cir. 1993). Examiner notes that what is claimed in claim 2 is that "the side seal is thick enough to provide support of the expandable air foil..." Therefore the applied art has a seal that is thick enough (fig. 3, col. 2, ll. 64-69, as discussed above)

In response to applicant's arguments against the references individually, one cannot show nonobviousness by attacking references individually where the rejections are based on combinations of references. See *In re Keller*, 642 F.2d 413, 208 USPQ 871 (CCPA 1981); *In re Merck & Co.*, 800 F.2d 1091, 231 USPQ 375 (Fed. Cir. 1986). In this case Day reference alone does not provide the blade with the thin blastomeric strip, examiner agrees with the Applicant, but as discussed above, Day in view of Allan covers said limitation.

In response to the applicant argument that the Day reference does not teach the existence of leakage or controlling the leakage by means of side and vane saals, the examiner notes that the Day invention is a pneumatic damper or valve, and its function is to prevent leakage. Further more regarding argument that the day teaches away from

the invention the examiner notice that the reference can not teaches away from the instant application but from another reference (secondary applied prior art).

In response to applicant's argument that the Day has different function, a recitation of the intended use of the claimed invention must result in a structural difference between the claimed invention and the prior art in order to patentably distinguish the claimed invention from the prior art. If the prior art structure is capable of performing the intended use, then it meets the claim.

Conclusion

Any inquiry concerning this communication or earlier communications from the examiner should be directed to HELENA KOSANOVIC whose telephone number is (571)272-9059. The examiner can normally be reached on 8:30-5:00, Monday through Friday.

If attempts to reach the examiner by telephone are unsuccessful, the examiner's supervisor, Steve McAllister can be reached on 571-272-6785. The fax phone number for the organization where this application or proceeding is assigned is 571-273-8300.

Information regarding the status of an application may be obtained from the Patent Application Information Retrieval (PAIR) system. Status information for published applications may be obtained from either Private PAIR or Public PAIR. Status information for unpublished applications is available through Private PAIR only. For more information about the PAIR system, see http://pair-direct.uspto.gov. Should you have questions on access to the Private PAIR system, contact the Electronic Business Center (EBC) at 866-217-9197 (toll-free). If you would like assistance from a USPTO Customer Service Representative or access to the automated information system, call 800-786-9199 (IN USA OR CANADA) or 571-272-1000.

/Helena Kosanovic/
Examiner, Art Unit 3749
070310

/Steven B. McAllister/
Supervisory Patent Examiner, Art Unit 3749

Search Notes	Application/Control No.	Applicant(s)/Patent under Reexamination
	11/787,252	COWARD ET AL.
	Examiner	Art Unit
	HELENA KOSANOVIC	3749

SEARCHED			
Class	Subclass	Date	Examiner
454	358	10/22/2009	HK
above	updated	4/14/2010	HK
above	updated	7/3/2010	HK

INTERFERENCE SEARCHED			
Class	Subclass	Date	Examiner

SEARCH NOTES (INCLUDING SEARCH STRATEGY)		
	DATE	EXMR
w/McAllister;prior art	10/22/2009	HK
East: inventor name search and text search	10/22/2009	HK
w/McAllister:priror art	4/14/2010	HK
w/McAllister:priror art	7/3/2010	HK

Index of Claims

Application/Control No.	Applicant(s)/Patent under Reexamination
11/787,252	COWARD ET AL.
Examiner	**Art Unit**
HELENA KOSANOVIC	3749

√	Rejected	–	(Through numeral) Cancelled	N	Non-Elected	A	Appeal
=	Allowed	÷	Restricted	I	Interference	O	Objected

Claim		Date								
Final	Original	10/22/09	4/14/10	7/3/10						
	1	√	√	√						
	2	√	√	√						
	3	√	√	√						
	4	√	√	√						
	5	√	√	√						
	6	√	√	√						
	7	√	√	√						
	8	√	√	√						
	9	√	√	√						
	10	√	√	√						
	11	√	√	√						
	12	√	√	√						
	13	√	√	√						
	14	√	√	√						
	15	√	√	√						
	16	√	√	√						
	17									
	18									
	19									
	20									
	21									
	22									
	23									
	24									
	25									
	26									
	27									
	28									
	29									
	30									
	31									
	32									
	33									
	34									
	35									
	36									
	37									
	38									
	39									
	40									
	41									
	42									
	43									
	44									
	45									
	46									
	47									
	48									
	49									
	50									

Claim		Date								
Final	Original									
	51									
	52									
	53									
	54									
	55									
	56									
	57									
	58									
	59									
	60									
	61									
	62									
	63									
	64									
	65									
	66									
	67									
	68									
	69									
	70									
	71									
	72									
	73									
	74									
	75									
	76									
	77									
	78									
	79									
	80									
	81									
	82									
	83									
	84									
	85									
	86									
	87									
	88									
	89									
	90									
	91									
	92									
	93									
	94									
	95									
	96									
	97									
	98									
	99									
	100									

Claim		Date								
Final	Original									
	101									
	102									
	103									
	104									
	105									
	106									
	107									
	108									
	109									
	110									
	111									
	112									
	113									
	114									
	115									
	116									
	117									
	118									
	119									
	120									
	121									
	122									
	123									
	124									
	125									
	126									
	127									
	128									
	129									
	130									
	131									
	132									
	133									
	134									
	135									
	136									
	137									
	138									
	139									
	140									
	141									
	142									
	143									
	144									
	145									
	146									
	147									
	148									
	149									
	150									

UNITED STATES PATENT AND TRADEMARK OFFICE

Commissioner for Patents
United States Patent and Trademark Office
P.O. Box 1450
Alexandria, VA 22313-1450
www.uspto.gov

CHARLES W COWARD
1 E SPRUCE
MOORESTOWN, NJ 08057

MAILED

JUN 13 2011

OFFICE OF PETITIONS

In re Application of :
Charles W. Coward, et al. :
Application No. 11/787,252 : ON PETITION
Filed: April 16, 2007 :
For: AIR FLOW CONTROL DEVICE WITH :
VERY TIGHT CLOSE OFF :

This is a decision in response to the renewed petition, filed May 9, 2011, to withdraw the holding of abandonment under the provisions of 37 CFR 1.181 (no fee).

The petition is **DISMISSED**.

The application was held abandoned for a failure to reply in a timely manner to the non-final Office action mailed, July 8, 2010, which set a shortened statutory period for reply of three (3) months. No extension of time under the provisions of 37 CFR 1.136(a) was obtained. Accordingly, the application became abandoned on October 9, 2010. A Notice of Abandonment was mailed on January 20, 2011. On February 14, 2011, a petition under the provisions of 37 CFR 1.181 was filed arguing that the Office action was not received; however, the petition was dismissed in a decision mailed April 13, 2011. In response on May 9, 2011, the present petition was filed.

Petitioner states that the address of record has been his residence for the last 35 years. Petitioner admits that he does not use a Master Docket, application file jacket or an incoming mail log; however, petitioner provides a detailed explanation of his system for record keeping.

The showing required to establish the failure to receive the Office action must consist of the following:

(1) A statement from that the Office communication was not received;
(2) A statement attesting to the fact that a search of the file jack and docket records indicates that the Office communication was not received; and
(3) A copy of the docket record where the non-received Office communication would have been entered had it been received and docketed must be attached to and referenced in applicant's statement.

Unfortunately, the petition fails to comply with requirement (3) above. Petitioner has not provided any evidence covering a reasonable period after October 8, 2010 to show where the non-received Office communication would have been docketed for reply had it been received.

While petitioner appears to be a meticulous person, without a documented showing in the form of a docket record, file jacket or log book, the petition cannot be granted.

The petition has been reconsidered as requested, but the result is the same. Consequently, the request to withdraw the holding of abandonment is dismissed.

If petitioner cannot supply the evidence necessary to withdraw the holding of abandonment, or simply does not wish to, petitioner should consider filing a petition under 37 CFR 1.137(b) stating that the entire delay was unintentional. Public Law 97-247, § 3, 96 Stat. 317 (1982), which revised patent and trademark fees, amended 35 U.S.C. § 41(a)(7) to provide for the revival of an "unintentionally" abandoned application without a showing that the delay in prosecution or in late payment of the issue fee was "unavoidable." This amendment to 35 U.S.C. § 41(a)(7) has been implemented in 37 CFR 1.137(b). The petition under 37 CFR 1.137(b) must be accompanied by the $810 petition fee, as well as the required reply if such has not been provided. Also, a statement that the delay was unintentional is not appropriate if petitioner intentionally delays the filing of a petition for revival under 37 CFR 1.137(b).

Further correspondence with respect to this matter should be delivered through one of the following mediums:

By mail: Mail Stop PETITIONS
Commissioner for Patents
Post Office Box 1450
Alexandria, VA 22313-1450

By hand: Customer Service Window
Mail Stop Petitions
Randolph Building
401 Dulany Street
Alexandria, VA 22314

By fax: (571) 273-8300
ATTN: Office of Petitions

By internet: EFS-Web[1]

Telephone inquiries concerning this decision should be directed to the undersigned at (571) 272-3204.

/SDB/

Sherry D. Brinkley
Petitions Examiner
Office of Petitions

[1] www.uspto.gov/ebc/efs_help.html (for help using EFS-Web call the Patent Electronic Business Center at (866) 217-9197)

UNITED STATES PATENT AND TRADEMARK OFFICE

Commissioner for Patents
United States Patent and Trademark Office
P.O. Box 1450
Alexandria, VA 22313-1450
www.uspto.gov

CHARLES W COWARD
1 E SPRUCE
MOORESTOWN, NJ 08057

MAILED
JAN 11 2012
OFFICE OF PETITIONS

In re Application of :
Charles W. Coward, et al. :
Application No.: 11/787,252 : ON PETITION
Filed: April 16, 2007 :
Attorney Docket No.: None :

This is a decision in response to the renewed petition under 37 CFR 1.181, filed July 13, 2011, requesting withdrawal of the holding of abandonment in the above-identified application.

The petition is **GRANTED**.

This application was held abandoned for a failure to timely reply to a non-final Office action mailed July 8, 2010. A Notice of Abandonment was mailed on January 20, 2011. On February 14, 2011, a petition to withdraw the holding of abandonment under 37 CFR 1.181 was filed; however, the petition was dismissed in a decision mailed April 13, 2011. A renewed petition was filed on May 9, 2011, but it was subsequently dismissed in a decision mailed June 13, 2011. In response, on July 13, 2011, the present petition was filed.

On reconsideration, petitioner has adequately supported his claim of non-receipt with the evidence provided.

In view of the above, the Notice of Abandonment is hereby vacated and the holding of abandonment withdrawn.

This application is being referred to the Technology Center technical support staff of Art Unit 3749 for re-mailing the non-final Office action of July 8, 2010. The period for reply will run from the mailing date of the Office action.

Telephone inquiries concerning this decision may be directed to the undersigned at (571) 272-3204. All other inquiries regarding this application should be directed to the Technology Center.

/SDB/

Sherry D. Brinkley
Petitions Examiner
Office of Petitions

UNITED STATES PATENT AND TRADEMARK OFFICE

Commissioner for Patents
United States Patent and Trademark Office
P.O. Box 1450
Alexandria, VA 22313-1450
www.uspto.gov

MAILED
JAN 12 2012
OFFICE OF PETITIONS

THE JACKSON PATENT GROUP
1500 FOREST AVENUE, SUITE 212
RICHMOND, VA 23229

In re Application of	:	
Kenneth C. Harding, et al.	:	
Application No. 11/787,260	:	NOTICE
Filed: April 13, 2007	:	
Attorney Docket No.: 1871(ITS)	:	

This is a notice regarding your request for acceptance of a fee deficiency submission under 37 CFR 1.28, filed November 21, 2011.

The Office no longer investigates or rejects original or reissue patent under 37 CFR 1.56. **1098 Off. Gaz. Pat. Office 502 (January 3, 1989)**. Therefore, nothing in this Notice is intended to imply that an investigation was done.

A review of the record indicates that a fee deficiency was previously submitted by a letter filed November 1, 2007; however, the United States Patent and Trademark Office failed to acknowledge the submission under 37 CFR 1.28.

The fee deficiency submission under 37 CFR 1.28 filed November 1, 2007 is hereby ACCEPTED.

In view of the above, the fee deficiency submitted with the present communication results in a fee deficiency overpayment of $750 will be credited to counsel's credit card.

This application is no longer entitled to small entity status. Accordingly, all future fees paid in this application must be paid at the large entity rate.

Inquiries related to this communication should be directed to the undersigned at (571) 272-3204.

/SDB/

Sherry D. Brinkley
Petitions Examiner
Office of Petitions

UNITED STATES PATENT AND TRADEMARK OFFICE

Commissioner for Patents
United States Patent and Trademark Office
P.O. Box 1450
Alexandria, VA 22313-1450
www.uspto.gov

Paper No.

HARNESS, DICKEY
& PIERCE, P.L.C.
P.O. BOX 828
BLOOMFIELD HILLS MI 48303

MAILED
DEC 30 2011
OFFICE OF PETITIONS

In re Application of :
Oakey et al. : DECISION ON PETITION
Application No. 11/787,266 :
Filed: April 13, 2007 :
Attorney Docket No. :
1543-000002/DVD :

This is a decision on the PETITION FOR REVIVAL OF AN APPLICATION FOR PATENT ABANDONED UNINTENTIONALLY UNDER 37 CFR 1.137(b) filed December 8, 2011.

The petition is **DISMISSED**.

Any request for reconsideration of this decision must be submitted within TWO (2) MONTHS from the mail date of this decision. Extensions of time under 37 C.F.R. § 1.136(a) are permitted. The reconsideration request should include a cover letter entitled "Renewed Petition under 37 C.F.R. § 1.137(b)."

The above-identified application became abandoned for failure to file a timely and proper reply to the final Office action mailed April 26, 2010. This Office action set a shortened statutory period for reply of three (3) months, with extensions of time obtainable under § 1.136(a). No reply filed and no extension of time obtained, the application became abandoned effective July 27, 2010. A courtesy Notice of Abandonment was mailed on December 9, 2010.

The provisions of 37 C.F.R. § 1.137(b) provide that where the delay in reply was unintentional, a petition may be filed to

revive an abandoned application or a lapsed patent. A petition filed pursuant to 37 C.F.R. §1.137(b) must be accompanied by:

> (1) The reply required to the outstanding Office action or notice, unless previously filed;
> (2) The petition fee as set forth in § 1.17(m);
> (3) A statement that the entire delay in filing the required reply from the due date for the reply until the filing of a grantable petition pursuant to this paragraph was unintentional. The Director may require additional information where there is a question whether the delay was unintentional; and
> (4) Any terminal disclaimer (and fee as set forth in § 1.20(d)) required pursuant to paragraph (d) of this section.

The petition includes a proposed reply in the form of an amendment, the required statement of unintentional delay and payment of the petition fee set forth in 37 CFR § 1.17(m). However, the instant petition does not satisfy requirement (1) above.

As stated in MPEP 711.03(c),

A reply under 37 CFR 1.113 to a final action must include a request for continued examination (RCE) under 37 CFR 1.114 or cancellation of, or appeal from the rejection of, each claim so rejected. Accordingly, in a nonprovisional application abandoned for failure to reply to a final action, the reply required for consideration of a petition to revive must be:

(A) a Notice of Appeal and appeal fee;
(B) an amendment under 37 CFR 1.116 that cancels all the rejected claims or otherwise prima facie places the application in condition for allowance;
(C) the filing of an RCE (accompanied by a submission that meets the reply requirements of 37 CFR 1.111 and the requisite fee) under 37 CFR 1.114 for utility or plant applications filed on or after June 8, 1995 (see paragraph (d) below); or
(D) the filing of a continuing application under 37 CFR 1.53(b) (or a CPA under 37 CFR 1.53(d) if the application is a design application).

The amendment submitted does not place the application in condition for allowance. The examiner's Advisory Action is enclosed. In view thereof, the petition must be dismissed.

Further correspondence with respect to this matter should be addressed as follows:

By mail: Mail Stop Petition
Commissioner for Patents
P.O. Box 1450
Alexandria, VA 22313-1450

By fax: (571) 273-8300
ATTN: Office of Petitions

By hand: Customer Service Window
Randolph Building
401 Dulany Street
Alexandria, VA 22314

Telephone inquiries specific to this matter should be directed to the undersigned at (571) 272-3219.

Nancy Johnson
Senior Petitions Attorney
Office of Petitions

Enclosure: Advisory Action

Advisory Action Before the Filing of an Appeal Brief	Application No. 11/787,266	Applicant(s) OAKEY ET AL.	
	Examiner JOHN ROBITAILLE	Art Unit 1744	

--The MAILING DATE of this communication appears on the cover sheet with the correspondence address --

THE REPLY FILED 08 December 2011 FAILS TO PLACE THIS APPLICATION IN CONDITION FOR ALLOWANCE.

1. ☒ The reply was filed after a final rejection, but prior to or on the same day as filing a Notice of Appeal. To avoid abandonment of this application, applicant must timely file one of the following replies: (1) an amendment, affidavit, or other evidence, which places the application in condition for allowance; (2) a Notice of Appeal (with appeal fee) in compliance with 37 CFR 41.31; or (3) a Request for Continued Examination (RCE) in compliance with 37 CFR 1.114. The reply must be filed within one of the following time periods:
   a) ☒ The period for reply expires 3 months from the mailing date of the final rejection.
   b) ☐ The period for reply expires on: (1) the mailing date of this Advisory Action, or (2) the date set forth in the final rejection, whichever is later. In no event, however, will the statutory period for reply expire later than SIX MONTHS from the mailing date of the final rejection.
   Examiner Note: If box 1 is checked, check either box (a) or (b). ONLY CHECK BOX (b) WHEN THE FIRST REPLY WAS FILED WITHIN TWO MONTHS OF THE FINAL REJECTION. See MPEP 706.07(f).

Extensions of time may be obtained under 37 CFR 1.136(a). The date on which the petition under 37 CFR 1.136(a) and the appropriate extension fee have been filed is the date for purposes of determining the period of extension and the corresponding amount of the fee. The appropriate extension fee under 37 CFR 1.17(a) is calculated from: (1) the expiration date of the shortened statutory period for reply originally set in the final Office action; or (2) as set forth in (b) above, if checked. Any reply received by the Office later than three months after the mailing date of the final rejection, even if timely filed, may reduce any earned patent term adjustment. See 37 CFR 1.704(b).

NOTICE OF APPEAL

2. ☐ The Notice of Appeal was filed on _____. A brief in compliance with 37 CFR 41.37 must be filed within two months of the date of filing the Notice of Appeal (37 CFR 41.37(a)), or any extension thereof (37 CFR 41.37(e)), to avoid dismissal of the appeal. Since a Notice of Appeal has been filed, any reply must be filed within the time period set forth in 37 CFR 41.37(a).

AMENDMENTS

3. ☒ The proposed amendment(s) filed after a final rejection, but prior to the date of filing a brief, will not be entered because
   (a) ☒ They raise new issues that would require further consideration and/or search (see NOTE below);
   (b) ☐ They raise the issue of new matter (see NOTE below);
   (c) ☐ They are not deemed to place the application in better form for appeal by materially reducing or simplifying the issues for appeal; and/or
   (d) ☐ They present additional claims without canceling a corresponding number of finally rejected claims.
   NOTE: *See Continuation Sheet*. (See 37 CFR 1.116 and 41.33(a)).
4. ☐ The amendments are not in compliance with 37 CFR 1.121. See attached Notice of Non-Compliant Amendment (PTOL-324).
5. ☐ Applicant's reply has overcome the following rejection(s): _____.
6. ☐ Newly proposed or amended claim(s) _____ would be allowable if submitted in a separate, timely filed amendment canceling the non-allowable claim(s).
7. ☒ For purposes of appeal, the proposed amendment(s): a) ☒ will not be entered, or b) ☐ will be entered and an explanation of how the new or amended claims would be rejected is provided below or appended.
   The status of the claim(s) is (or will be) as follows:
   Claim(s) allowed: _____.
   Claim(s) objected to: _____.
   Claim(s) rejected: _____.
   Claim(s) withdrawn from consideration: _____.

AFFIDAVIT OR OTHER EVIDENCE

8. ☐ The affidavit or other evidence filed after a final action, but before or on the date of filing a Notice of Appeal will not be entered because applicant failed to provide a showing of good and sufficient reasons why the affidavit or other evidence is necessary and was not earlier presented. See 37 CFR 1.116(e).
9. ☐ The affidavit or other evidence filed after the date of filing a Notice of Appeal, but prior to the date of filing a brief, will not be entered because the affidavit or other evidence failed to overcome all rejections under appeal and/or appellant fails to provide a showing a good and sufficient reasons why it is necessary and was not earlier presented. See 37 CFR 41.33(d)(1).
10. ☐ The affidavit or other evidence is entered. An explanation of the status of the claims after entry is below or attached.

REQUEST FOR RECONSIDERATION/OTHER

11. ☐ The request for reconsideration has been considered but does NOT place the application in condition for allowance because: _____.
12. ☐ Note the attached Information *Disclosure Statement*(s). (PTO/SB/08) Paper No(s). _____
13. ☐ Other: _____.

Continuation of 3. NOTE: the limitation "forming the peripheral edge of the sheet by the contacting of the first and second mold halves to form a desired non-planar contour or curve portion above or below a horizontal plane contour or curve on the peripheral edge" was not previously considered.

Advisory Action Before the Filing of an Appeal Brief	Application No.	Applicant(s)	
	11/787,266	OAKEY ET AL.	
	Examiner	Art Unit	
	JOHN ROBITAILLE	1744	

--The MAILING DATE of this communication appears on the cover sheet with the correspondence address --

THE REPLY FILED 08 December 2011 FAILS TO PLACE THIS APPLICATION IN CONDITION FOR ALLOWANCE.

1. ☒ The reply was filed after a final rejection, but prior to or on the same day as filing a Notice of Appeal. To avoid abandonment of this application, applicant must timely file one of the following replies: (1) an amendment, affidavit, or other evidence, which places the application in condition for allowance; (2) a Notice of Appeal (with appeal fee) in compliance with 37 CFR 41.31; or (3) a Request for Continued Examination (RCE) in compliance with 37 CFR 1.114. The reply must be filed within one of the following time periods:
   a) ☒ The period for reply expires 3 months from the mailing date of the final rejection.
   b) ☐ The period for reply expires on: (1) the mailing date of this Advisory Action, or (2) the date set forth in the final rejection, whichever is later. In no event, however, will the statutory period for reply expire later than SIX MONTHS from the mailing date of the final rejection.

   Examiner Note: If box 1 is checked, check either box (a) or (b). ONLY CHECK BOX (b) WHEN THE FIRST REPLY WAS FILED WITHIN TWO MONTHS OF THE FINAL REJECTION. See MPEP 706.07(f).

Extensions of time may be obtained under 37 CFR 1.136(a). The date on which the petition under 37 CFR 1.136(a) and the appropriate extension fee have been filed is the date for purposes of determining the period of extension and the corresponding amount of the fee. The appropriate extension fee under 37 CFR 1.17(a) is calculated from: (1) the expiration date of the shortened statutory period for reply originally set in the final Office action; or (2) as set forth in (b) above, if checked. Any reply received by the Office later than three months after the mailing date of the final rejection, even if timely filed, may reduce any earned patent term adjustment. See 37 CFR 1.704(b).

NOTICE OF APPEAL

2. ☐ The Notice of Appeal was filed on _____. A brief in compliance with 37 CFR 41.37 must be filed within two months of the date of filing the Notice of Appeal (37 CFR 41.37(a)), or any extension thereof (37 CFR 41.37(e)), to avoid dismissal of the appeal. Since a Notice of Appeal has been filed, any reply must be filed within the time period set forth in 37 CFR 41.37(a).

AMENDMENTS

3. ☒ The proposed amendment(s) filed after a final rejection, but prior to the date of filing a brief, will not be entered because
   (a) ☒ They raise new issues that would require further consideration and/or search (see NOTE below);
   (b) ☐ They raise the issue of new matter (see NOTE below);
   (c) ☐ They are not deemed to place the application in better form for appeal by materially reducing or simplifying the issues for appeal; and/or
   (d) ☐ They present additional claims without canceling a corresponding number of finally rejected claims.

   NOTE: *See Continuation Sheet*. (See 37 CFR 1.116 and 41.33(a)).
4. ☐ The amendments are not in compliance with 37 CFR 1.121. See attached Notice of Non-Compliant Amendment (PTOL-324).
5. ☐ Applicant's reply has overcome the following rejection(s): _____.
6. ☐ Newly proposed or amended claim(s) _____ would be allowable if submitted in a separate, timely filed amendment canceling the non-allowable claim(s).
7. ☒ For purposes of appeal, the proposed amendment(s): a) ☒ will not be entered, or b) ☐ will be entered and an explanation of how the new or amended claims would be rejected is provided below or appended.
   The status of the claim(s) is (or will be) as follows:
   Claim(s) allowed: _____.
   Claim(s) objected to: _____.
   Claim(s) rejected: _____.
   Claim(s) withdrawn from consideration: _____.

AFFIDAVIT OR OTHER EVIDENCE

8. ☐ The affidavit or other evidence filed after a final action, but before or on the date of filing a Notice of Appeal will not be entered because applicant failed to provide a showing of good and sufficient reasons why the affidavit or other evidence is necessary and was not earlier presented. See 37 CFR 1.116(e).
9. ☐ The affidavit or other evidence filed after the date of filing a Notice of Appeal, but prior to the date of filing a brief, will not be entered because the affidavit or other evidence failed to overcome all rejections under appeal and/or appellant fails to provide a showing a good and sufficient reasons why it is necessary and was not earlier presented. See 37 CFR 41.33(d)(1).
10. ☐ The affidavit or other evidence is entered. An explanation of the status of the claims after entry is below or attached.

REQUEST FOR RECONSIDERATION/OTHER

11. ☐ The request for reconsideration has been considered but does NOT place the application in condition for allowance because: _____.
12. ☐ Note the attached Information *Disclosure Statement*(s). (PTO/SB/08) Paper No(s). _____
13. ☐ Other: _____.

Continuation of 3. NOTE: the limitation "forming the peripheral edge of the sheet by the contacting of the first and second mold halves to form a desired non-planar contour or curve portion above or below a horizontal plane contour or curve on the peripheral edge" was not previously considered.

UNITED STATES PATENT AND TRADEMARK OFFICE

Commissioner for Patents
United States Patent and Trademark Office
P.O. Box 1450
Alexandria, VA 22313-1450
www.uspto.gov

MAILED
FEB 29 2012
OFFICE OF PETITIONS

HARNESS, DICKEY
& PIERCE, P.L.C.
P.O. BOX 828
BLOOMFIELD HILLS MI 48303

In re Application of	:	
Oakey et al.	:	DECISION ON PETITION
Application No. 11/787,266	:	
Filed: April 13, 2007	:	
Attorney Docket No.	:	
1543-000002/DVD	:	

This is a decision on the RENEWED PETITION UNDER 37 CFR 1.137(b) filed February 23, 2012.

The renewed petition is **GRANTED**.

The above-identified application became abandoned effective July 27, 2010 for failure to file a timely and proper reply to the final Office action mailed April 26, 2010. A courtesy Notice of Abandonment was mailed on December 9, 2010. By decision mailed December 30, 2011, the initial petition under 37 CFR 1.137(b) was dismissed. All requirements of the rule were met except the proposed reply to not met the required reply provision of 37 C.F.R. § 1.137(b) as the amendment did not place the application in condition for allowance.

The renewed petition includes a proposed reply in the form of a request for continued examination (RCE), submission under §1.114 (in the form of the previously submitted after-final amendment) and RCE fee. All requirements of 37 CFR 1.137(b) have now been met.

Technology Center AU 1744 has been advised of this decision. The application is, thereby, forwarded to the examiner for

consideration of the RCE and submission submitted on petition filed February 23, 2012.

Telephone inquiries specific to this matter should be directed to the undersigned at (571) 272-3219.

Nancy Johnson
Senior Petitions Attorney
Office of Petitions

UNITED STATES PATENT AND TRADEMARK OFFICE

Commissioner for Patents
United States Patent and Trademark Office
P.O. Box 1450
Alexandria, VA 22313-1450
www.uspto.gov

Mr. John J. Penny
Nutter McClennen & Fish LLP
World Trade Center West
155 Seaport Boulevard
Boston MA 02210-2604

MAILED

AUG 02 2010

OFFICE OF PETITIONS

In re Patent No. 7,536,984 :
Issue Date: May 26, 2009 :
Application No. 11/787,295 : DECISION ON PETITION
Filed: April 16, 2007 :
Attorney Docket No. (301827) :

This is a decision on the Petition For Certificate Of Correction Under 37 C.F.R. 3.81(B), filed March 2, 2010, which is being treated as a Petition Under 3.81(b) to identify the correct assignee's name. A completed Certificate of Correction Form PTO/SB/44 was submitted with the petition.

The petition under 37 CFR 3.81(b) is **GRANTED**.

Petitioner urges that the present Petition was submitted to correct the assignee's name on the previously submitted PTOL-85B and such was a change in the name. Accordingly, petitioner requests, in effect, that a Certificate of Correction (PTO/SB/44) be issued the correct assignee's name to the Title Page of the Letters Patent.

37 CFR 3.81(b), effective June 25, 2004, reads:

> *After payment of the issue fee:* Any request for issuance of an application in the name of the assignee submitted after the date of payment of the issue fee, and any request for a patent to be corrected to state the name of the assignee, must state that the assignment was submitted for recordation as set forth in § 3.11 before issuance of the patent, and must include a request for a certificate of correction under § 1.323 of this chapter (accompanied by the fee set forth in § 1.20(a) and the processing fee set forth in § 1.17(i) of this chapter.

The requisite $100.00 fee (Fee Code 1811) as set forth under 37 CFR 1.20(a), and the requisite $130.00 processing fee (Fee Code 1464) as set forth under 37 CFR 1.17(i) have been submitted. Further, Office assignment records are consistent with the requested correction. Accordingly, since the Petition complies with the provisions of 37 CFR 3.81(b), it is appropriate for the Office to issue a Certificate of Correction in accordance with the content of the form (PTO/SB/44) that was submitted with petition.

Inquiries related this communication should be directed to the undersigned at (571)272-3213.

Any questions concerning the issuance of a Certificate of Correction should be directed to the Certificates of Correction Branch at (571) 272-4200.

This matter is being referred to the Certificates of Correction Branch for processing of a Certificate of Correction in U.S. Patent No. 7,536,984.

Cheryl Gibson-Baylor
Petitions Examiner
Office of Petitions

UNITED STATES PATENT AND TRADEMARK OFFICE

Commissioner for Patents
United States Patent and Trademark Office
P.O. Box 1450

MAILED

JUL 07 2011

OFFICE OF PETITIONS

JAMES C. WRAY
1493 CHAIN BRIDGE ROAD
SUITE 300
MCLEAN VA 22101

In re Application of :
Jerry R. COLLETTE et al. : ON PETITION
Application No. 11/787,315 :
Filed: April 16, 2007 :

This is a decision on the petition under 37 CFR 1.137(b), filed June 8, 2011, to revive the above-identified application.

The petition is **GRANTED**.

The application was held abandoned for failure to reply in a timely manner to the Notice of Allowance and Fee(s) Due mailed August 5, 2010, which set a statutory period for reply of three (3) months. The application became abandoned on November 6, 2010. A Notice of Abandonment was mailed December 2, 2010.

The petition satisfies the conditions for revival pursuant to 37 CFR 1.137(b) by including (1) a reply in the form of payment of the issue fee in accordance with the Notice of Allowance and Fee(s) Due, (2) a petition fee of $810, and (3) a statement of unintentional delay. The reply to the Notice is accepted as having been unintentionally delayed.

Telephone inquires regarding this decision should be directed to Robert DeWitty, Petitions Attorney, Office of Petitions (571-272-8427).

The application file will be referred to Office of Data Management for further processing.

Anthony Knight
Director
Office of Petitions

UNITED STATES PATENT AND TRADEMARK OFFICE

Commissioner for Patents
United States Patent and Trademark Office
P.O. Box 1450
Alexandria, VA 22313-1450
www.uspto.gov

September 30, 2010

Hall, Estill, Hardwick, Gable, Golden &
Nelson, P.C.
100 North Broadway
Chase Tower, Suite 2900
Oklahoma City OK 73102

In re Application of	:	
Ramin Abhari	:	**DECISION ON PETITION**
Application No. 11787370	:	
Filed: 04/16/2007	:	***ACCEPTANCE OF COLOR***
Attorney Docket No. **737250.01975**	:	***DRAWINGS***

This is a decision on the Petition to Accept Color Drawings under 37 C.F.R 1.84 (a) (2), received in the United States Patent and Trademark Office (USPTO) April 16, 2007.

The petition is **GRANTED**.

A grantable petition under 37 C.F.R. 1.84(a) (2) must be accompanied by the following.

1. The fee set forth under 37 C.F.R. 1.17(h),
2. Three (3) sets of the color drawings in question, or (1) set if filed via EFS, and
3. The specification containing the following language as the first paragraph in that portion of the specification relating to the brief description of the drawings.

   "The file of this patent contains at least one drawing executed in color. Copies of this patent with color drawing(s) will be provided by the Patent and Trademark Office upon request and payment of the necessary fee."

The petition was accompanied by all of the required fees and drawings. The specification contains the appropriate language. Therefore, the petition is GRANTED.

Telephone inquires relating to this decision may be directed to the undersigned in the Office of Data Management at 571-272-4200.

Kimberly Terrell, Manager
Office of Data Management
Publications Branch

UNITED STATES PATENT AND TRADEMARK OFFICE

Commissioner for Patents
United States Patent and Trademark Office
P.O. Box 1450
Alexandria, VA 22313-1450
www.uspto.gov

SCHLUMBERGER INFORMATION SOLUTIONS
5599 SAN FELIPE
SUITE 1700
HOUSTON TX 77056-2722

MAILED
APR 18 2011
OFFICE OF PETITIONS

In re Application of	:	
Thomas J. Neville	:	
Application No. 11/787,418	:	DECISION ON PETITION
Filed: April 14, 2007	:	
Attorney Docket No. 62.0005	:	

This is a decision on the petition under the unintentional provisions of 37 CFR 1.137(b), filed March 3, 2011, to revive the above-identified application.

The petition is **GRANTED**.

The application became abandoned for failure to reply in a timely manner to the non-final Office action mailed, February 23, 2010, which set a shortened statutory period for reply of three (3) months. No extensions of time under the provisions of 37 CFR 1.136(a) were obtained. Accordingly, the application became abandoned on May 24, 2010.

The petition satisfies the requirements of 37 CFR 1.137(b) in that petitioner has supplied (1) the reply in the form of an Amendment, (2) the petition fee of $1,620.00, and (3) a proper statement of unintentional delay.

Further, it is not apparent whether the statement of unintentional delay was signed by a person who would have been in a position of knowing that the **entire** delay in filing the required reply from the due date for the reply until the filing of a grantable petition pursuant to 37 CFR 1.137(b) was unintentional. Nevertheless, in accordance with 37 CFR 10.18, the statement is accepted as constituting a certification of unintentional delay. However, in the event that petitioner has no knowledge that the delay was unintentional, petitioner must make such an inquiry to ascertain that, in fact, the delay was unintentional. If petitioner discovers that the delay was intentional, petitioner must notify the Office. Additionally, it is not apparent whether the person signing the instant petition was ever given a power of attorney or authorization of agent to prosecute this application. In accordance with 37 CFR 1.34(a), the signature appearing on the petition shall constitute a representation to the United States Patent and Trademark Office that he/she is authorized to represent the particular party in whose behalf he/she acts.

Further, the address given on the petition differs from the address of record. A courtesy copy of this decision is being mailed to the address given on the petition; however, the Office will mail all future correspondence solely to the address of record.

Telephone inquiries concerning this decision should be directed to the undersigned at (571) 272-7751.

This application is being referred to Technology Center AU 2123 for appropriate action by the Examiner in the normal course of business on the reply received.

/Joan Olszewski/
Joan Olszewski
Petitions Examiner
Office of Petitions

cc: Carl F. Ruoff
Hoffman, Warnick LLC
75 State Street, 14th Floor
Albany, New York 12207

UNITED STATES PATENT AND TRADEMARK OFFICE

Commissioner for Patents
United States Patent and Trademark Office
P.O. Box 1450
Alexandria, VA 22313-1450
www.uspto.gov

DARREN WASSERMAN
5411 PARK AVENUE
GARDEN GROVE, CA 92845

MAILED

SEP 14 2010

OFFICE OF PETITIONS

In re Application of
Darren Wasserman
Application No. 11/787,420
Filed: April 14, 2007
Attorney Docket No. 0210601

DECISION ON PETITION

This is a decision on the petition under the unintentional provisions of 37 CFR 1.137(b), filed August 5, 2010, to revive the above-identified application.

There is no indication that the person signing the instant petition was ever given a power of attorney or authorization of agent to prosecute the above-identified application. In accordance with 37 CFR 1.34(a), the signature appearing on the petition shall constitute a representation to the United States Patent and Trademark Office that he/she is authorized to represent the particular party in whose behalf he/she acts. However, if petitioner desires to receive future correspondence regarding this application, the appropriate power of attorney or authorization of agent must be submitted. All future correspondence regarding this application file will be directed solely to the address of record until otherwise instructed.

It is not apparent whether the statement of unintentional delay was signed by a person who would have been in a position of knowing that the entire delay in filing the required reply from the due date for the reply until the filing of a grantable petition pursuant to 37 CFR 1.137(b) was unintentional. Nevertheless, in accordance with 37 CFR 10.18, the statement is accepted as constituting a certification of unintentional delay. However, in the event that petitioner has no knowledge that the delay was unintentional, petitioner must make such an inquiry to ascertain that, in fact, the delay was unintentional. If petitioner discovers that the delay was intentional, petitioner must so notify the Office.

This application became abandoned for failure to timely pay the issue and publication fees on or before June 11, 2010, as required by the Notice of Allowance and Fee(s) Due, mailed March 11, 2010. Accordingly, the date of abandonment of this application is June 12, 2010.

The petition satisfies the requirements of 37 CFR 1.137(b) in that petitioner has supplied (1) the reply in the form of payment of the issue fee of $755 and the publication fee of $300, (2) the petition fee of $810; and (3) a proper statement of unintentional delay.

In view of the above, the petition is **GRANTED**.

The application file does not indicate a change of address has been filed in this case, although the address given on the petition differs from the address of record. A change of address should be filed in this case in accordance with MPEP 601.03. A courtesy copy of this decision is being mailed to the address noted on the petition. However, until otherwise instructed, all future correspondence regarding this application will be mailed solely to the address of record.

Telephone inquiries concerning this decision should be directed to undersigned at (571) 272-1642. All other inquiries concerning this application should be directed to the Office of Data Management at their hotline 571-272-4200.

This application is being referred to the Office of Data Management for processing into a patent.

April M. Wise
Petitions Examiner
Office of Petitions

cc: AARON PAUL MCGUSHION
4565 DOGWOOD AVE
SEAL BEACH, CA 90740

UNITED STATES PATENT AND TRADEMARK OFFICE

Commissioner for Patents
United States Patent and Trademark Office
P.O. Box 1450
Alexandria, VA 22313-1450
www.uspto.gov

BOR Z. JANG
9436 PARKSIDE DRIVE
CENTERVILLE OH 45458

MAILED

SEP 27 2010

OFFICE OF PETITIONS

In re Application of	:	
Aruna ZHAMU	:	
Application No. 11/787,442	:	DECISION ON PETITION
Filed: April 17, 2007	:	
Attorney Docket No.	:	

This is a decision on the petition, filed May 26, 2010, which is being treated as a petition under 37 CFR 1.181 (no fee) requesting withdrawal of the holding of abandonment in the above-identified application.

The petition is **DISMISSED**.

Any request for reconsideration of this decision should be filed within two (2) months from the mail date of this decision. *Note* 37 CFR 1.181(f). The request for reconsideration should include a cover letter and be entitled as a "Renewed Petition under 37 CFR 1.181 to Withdraw the Holding of Abandonment."

This application was held abandoned for failure to timely pay the issue and publication fees on or before April 27, 2010, as required by the Notice of Allowance and Fee(s) Due (Notice), mailed January 27, 2010. Accordingly, the application became abandoned on April 28, 2010.

Petitioner asserts that a *bona fide* error was made and that they did not receive any earlier notice of paying the balance due of $5.00. However, the Notice of Allowance clearly states the amount of the issue and publication fees. It is the responsibility of the petitioner to provide the fees accurately and in a timely matter.

The petition fails to satisfy the requirements under 37 CFR 1.181. In this regard, the petition cannot be granted at this time.

If petitioner cannot supply the evidence necessary to withdraw the holding of abandonment, or simply does not wish to, petitioner should consider filing a petition under 37 CFR 1.137(b) stating that the delay was unintentional. Public Law 97-247, § 3, 96 Stat. 317 (1982), which revised patent and trademark fees, amended 35 U.S.C. § 41(a)(7) to provide for the revival of an "unintentionally" abandoned application without a showing that the delay in prosecution or in late payment of the issue fee was "unavoidable." This amendment to 35 U.S.C. § 41(a)(7) has been implemented in 37 CFR 1.137(b). An "unintentional" petition under 37 CFR 1.137(b) must be accompanied by the $810.00 petition fee.

The filing of a petition under 37 CFR 1.137(b) cannot be intentionally delayed and therefore must be filed promptly. A person seeking revival due to unintentional delay cannot make a statement that the delay was unintentional unless the entire delay, including the date it was discovered that the application was abandoned until the filing of the petition to revive under 37 CFR 1.137(b), was unintentional. A statement that the delay was unintentional is not appropriate if petitioner intentionally delayed the filing of a petition for revival under 37 CFR 1.137(b).

Further correspondence with respect to this matter should be addressed as follows:

By Mail: Mail Stop PETITION
Commissioner for Patents
P. O. Box 1450
Alexandria, VA 22313-1450

By hand: U. S. Patent and Trademark Office
Customer Service Window, Mail Stop Petitions
Randolph Building
401 Dulany Street
Alexandria, VA 22314

By facsimile: **(571) 273-8300**
Attn: Office of Petitions

Telephone inquiries concerning this decision should be directed to Michelle R. Eason at (571) 272-4231.

Thurman K. Page
Petitions Examiner
Office of Petitions

UNITED STATES PATENT AND TRADEMARK OFFICE

Commissioner for Patents
United States Patent and Trademark Office
P.O. Box 1450
Alexandria, VA 22313-1450
www.uspto.gov

BOR Z. JANG
9436 PARKSIDE DRIVE
CENTERVILLE OH 45458

MAILED
APR 25 2011
OFFICE OF PETITIONS

In re Application of	:	
Aruna ZHAMU	:	
Application No. 11/787,442	:	DECISION ON PETITION
Filed: April 17, 2007	:	
Attorney Docket No.	:	

This is a decision on the renewed petition, filed November 02, 2010, which is being treated as a petition under 37 CFR 1.181 (no fee) requesting withdrawal of the holding of abandonment in the above-identified application.

The petition is **DISMISSED**.

Any request for reconsideration of this decision should be filed within two (2) months from the mail date of this decision. *Note* 37 CFR 1.181(f). The request for reconsideration should include a cover letter and be entitled as a "Renewed Petition under 37 CFR 1.181 to Withdraw the Holding of Abandonment."

This application was held abandoned for failure to timely pay the issue and publication fees on or before April 27, 2010, as required by the Notice of Allowance and Fee(s) Due (Notice), mailed January 27, 2010. Accordingly, the application became abandoned on April 28, 2010.

Petitioner asserts that a *bona fide* error was made and that they did not receive any earlier notice of paying the balance due of $5.00. However, the Notice of Allowance clearly states the amount of the issue and publication fees. It is the responsibility of the petitioner to provide the fees accurately and in a timely matter.

The petition fails to satisfy the requirements under 37 CFR 1.181. In this regard, the petition cannot be granted at this time.

ALTERNATIVE VENUE

Petitioner is strongly encouraged to consider filing a petition under 37 CFR 1.137(b) to revive an unintentionally abandoned application instead of filing a renewed petition under 37 CFR 1.181 or a petition under 37 CFR 1.137(a).

A grantable petition pursuant to 37 CFR 1.137(b) must be accompanied by:

(1) The reply required to the outstanding Office action or notice, unless previously filed. In nonprovisional utility application abandoned for failure to respond to a non-final Office action, the required reply may be met by filing either (A) an argument or amendment under 37 CFR 1.111 or (B) a continuing application under 37 CFR 1.53(b).

(2) The petition fee as set forth in 37 CFR 1.17(m), **$810.00 for a small entity**;

(3) A statement that the entire delay in filing the required reply from the due date for reply until the filing of a grantable petition was unintentional. The Director may require additional information where there is a question whether the delay was unintentional.

A form for filing a petition to revive an unintentionally abandoned application accompanies this decision for petitioner's convenience. If petitioner desires to file a petition under 37 CFR 1.137(b) instead of filing a request for reconsideration, petitioner must complete the enclosed petition form (PTO/SB/64) and pay the $810.00 petition fee.

Petitioner may wish to consider hiring a registered patent attorney or agent to assist in the prosecution of this application. Additionally, petitioner is encouraged to contact the Inventors Assistance Center (IAC) by telephone at 800-786-9199 or 571-272-1000, Monday through Friday from 8:30 AM to 5:30 PM (EST). The IAC provides patent information and services to the public and is staffed by former Supervisory Patent Examiners and experienced Primary Examiners who answer general questions concerning patent examining policy and procedure.

There is no indication that the person signing the petition was ever given a power of attorney to prosecute the application. If the person signing the petition desires to receive future correspondence regarding this application, the appropriate power of attorney documents must be submitted. While a courtesy copy of this decision is being mailed to the person signing the petition, all future correspondence will be directed to the address currently of record until appropriate instructions are received.

Further correspondence with respect to this matter should be addressed as follows:

By Mail: Mail Stop PETITION
Commissioner for Patents
P. O. Box 1450
Alexandria, VA 22313-1450

By hand: U. S. Patent and Trademark Office
Customer Service Window, Mail Stop Petitions
Randolph Building
401 Dulany Street
Alexandria, VA 22314

By facsimile: **(571) 273-8300**
Attn: Office of Petitions

Telephone inquiries concerning this decision should be directed to Michelle R. Eason at (571) 272-4231.

Thurman K. Page
Petitions Examiner
Office of Petitions

Cc: **SUSAN M. OILER**
THOMPSON HINE LLP
2000 COURTHOUSE PLAZA N.E.
10 WEST SECOND STREET
DAYTON, OHIO 45402-1758

UNITED STATES PATENT AND TRADEMARK OFFICE

Commissioner for Patents
United States Patent and Trademark Office
P.O. Box 1450
Alexandria, VA 22313-1450
www.uspto.gov

BOR Z. JANG
9436 PARKSIDE DRIVE
CENTERVILLE OH 45458

MAILED
AUG 29 2011
OFFICE OF PETITIONS

In re Application of	:	
Aruna ZHAMU	:	
Application No. 11/787,442	:	DECISION ON PETITION
Filed: April 17, 2007	:	
Attorney Docket No.	:	

This is a decision on the renewed petition, filed June 24, 2011, which is being treated as a petition under 37 CFR 1.181 (no fee) requesting withdrawal of the holding of abandonment in the above-identified application.

The petition is **DISMISSED**.

Any request for reconsideration of this decision should be filed within two (2) months from the mail date of this decision. *Note* 37 CFR 1.181(f). The request for reconsideration should include a cover letter and be entitled as a "Renewed Petition under 37 CFR 1.181 to Withdraw the Holding of Abandonment."

This application was held abandoned for failure to timely pay the issue and publication fees on or before April 27, 2010, as required by the Notice of Allowance and Fee(s) Due (Notice), mailed January 27, 2010. Accordingly, the application became abandoned on April 28, 2010.

Petitioner asserts that an authorization to charge any additional fees was included on the amendment after final filed January 08, 2010. A general authorization previously submitted cannot be relied upon for payment of an issue fee.

The petition fails to satisfy the requirements under 37 CFR 1.181. In this regard, the petition cannot be granted at this time.

The statement of delay is not acceptable. In this regard, petitioner's attention is directed to 37 CFR 1.33(b), which states.

> **(b) Amendments and other papers. Amendments and other papers, except for written assertions pursuant to § 1.27(c)(2)(ii) of this part, filed in the application must be signed by:**
> (1) A registered patent attorney or patent agent of record appointed in compliance with § 1.32(b);
> (2) A registered patent attorney or patent agent not of record who acts in a representative capacity under the provisions of § 1.34;
> (3) An assignee as provided for under §3.71(b) of this chapter; or
> **(4) All of the applicants (§ 1.41(b)) for patent, unless there is an assignee of the entire interest and such assignee has taken action in the application in accordance with § 3.71 of this chapter.**

An unsigned amendment (or other paper) or one not properly signed by a person having authority to prosecute the application is not entered. This applies, for instance, where the amendment (or other paper) is signed by only one of two applicants and the one signing has not been given a power of attorney by the other applicant.

Therefore, as the petition is not signed by all the inventors and the record herein fails to disclose that petitioner herein (Bor Z. Jang) was ever given a power of attorney to act on behalf of inventors Aruna Zhmu, Jinjun Shi and Jiusheng Guo, or that he is an assignee of the entire interest and has complied with the provisions of 37 CFR 3.73(b).

ALTERNATIVE VENUE

Petitioner is strongly encouraged to consider filing a petition under 37 CFR 1.137(b) to revive an unintentionally abandoned application instead of filing a renewed petition under 37 CFR 1.181 or a petition under 37 CFR 1.137(a).

A grantable petition pursuant to 37 CFR 1.137(b) must be accompanied by:

> (1) The reply required to the outstanding Office action or notice, unless previously filed. In nonprovisional utility application abandoned for failure to respond to a non-final Office action, the required reply may be met by filing either (A) an argument or amendment under 37 CFR 1.111 or (B) a continuing application under 37 CFR 1.53(b).
>
> (2) The petition fee as set forth in 37 CFR 1.17(m), **$810.00 for a small entity**;
>
> (3) A statement that the entire delay in filing the required reply from the due date for reply until the filing of a grantable petition was unintentional. The Director may require additional information where there is a question whether the delay was unintentional.

A form for filing a petition to revive an unintentionally abandoned application accompanies this decision for petitioner's convenience. If petitioner desires to file a petition under 37 CFR 1.137(b) instead of filing a request for reconsideration, petitioner must complete the enclosed petition form (PTO/SB/64) and pay the $810.00 petition fee.

Petitioner may wish to consider hiring a registered patent attorney or agent to assist in the prosecution of this application. Additionally, petitioner is encouraged to contact the Inventors Assistance Center (IAC) by telephone at 800-786-9199 or 571-272-1000, Monday through Friday from 8:30 AM to 5:30 PM (EST). The IAC provides patent information and services to the public and is staffed by former Supervisory Patent Examiners and experienced Primary Examiners who answer general questions concerning patent examining policy and procedure.

Further correspondence with respect to this matter should be addressed as follows:

By Mail: Mail Stop PETITION
Commissioner for Patents
P. O. Box 1450
Alexandria, VA 22313-1450

By hand: U. S. Patent and Trademark Office
Customer Service Window, Mail Stop Petitions
Randolph Building
401 Dulany Street
Alexandria, VA 22314

By facsimile: **(571) 273-8300**
Attn: Office of Petitions

Telephone inquiries concerning this decision should be directed to Michelle R. Eason at (571) 272-4231.

Thurman K. Page
Petitions Examiner
Office of Petitions

UNITED STATES PATENT AND TRADEMARK OFFICE

Commissioner for Patents
United States Patent and Trademark Office
P.O. Box 1450
Alexandria, VA 22313-1450
www.uspto.gov

BOR Z. JANG
9436 PARKSIDE DRIVE
CENTERVILLE OH 45458

MAILED

JAN 30 2012

OFFICE OF PETITIONS

In re Application of	:	
Aruna ZHAMU et al.	:	
Application No. 11/787,442	:	DECISION ON PETITION
Filed: April 17, 2007	:	
Attorney Docket No.	:	

This is a decision on the petition under the unintentional provisions of 37 CFR 1.137(b), filed December 29, 2011, to revive the above-identified application.

The petition is **GRANTED**.

This application became abandoned for failure to timely pay the issue and publication fees on or before April 27, 2010, as required by the Notice of Allowance and Fee(s) Due, mailed January 27, 2010. Accordingly, the date of abandonment of this application is April 28, 2010.

The petition satisfies the requirements of 37 CFR 1.137(b) in that petitioner has supplied (1) the reply in the form of payment of the issue fee of $755.00 and the publication fee of $300.00, (2) the petition fee of $930.00; and (3) a proper statement of unintentional delay.

It is not apparent whether the person signing the statement of unintentional delay was in a position to have firsthand or direct knowledge of the facts and circumstances of the delay at issue. Nevertheless, such statement is being treated as having been made as the result of a reasonable inquiry into the facts and circumstances of such delay. See 37 CFR 10.18(b) and Changes to Patent Practice and Procedure; Final Rule Notice, 62 Fed. Reg. 53131, 53178 (October 10, 1997), 1203 Off. Gaz. Pat. Office 63, 103 (October 21, 1997). In the event that such an inquiry has not been made, petitioner must make such an inquiry. If such inquiry results in the discovery that it is not correct that the entire delay in filing the required reply from the due date for the reply until the filing of a grantable petition pursuant to 37 CFR 1.137(b) was unintentional, petitioner must notify the Office.

There is no indication that the person signing the petition was ever given a power of attorney to prosecute the application. If the person signing the petition desires to receive future correspondence regarding this application, the appropriate power of attorney document must be submitted. While a courtesy copy of this decision is being mailed to the person signing the petition, all future correspondence will be directed to the address currently of record until appropriate instructions are received.

Telephone inquiries concerning this decision should be directed to the undersigned at (571) 272-4231.

This application is being referred to the Office of Data Management.

/Michelle R. Eason/
Michelle R. Eason
Paralegal Specialist
Office of Petitions

cc: **SUSAN M. OILER**
THOMPSON HINE LLP
10050O INNOVATION DRIVE
SUITE 400
DAYTON, OHIO 45342

UNITED STATES PATENT AND TRADEMARK OFFICE

Commissioner for Patents
United States Patent and Trademark Office
P.O. Box 1450
Alexandria, VA 22313-1450
www.uspto.gov

KENYON & KENYON LLP
ONE BROADWAY
NEW YORK NY 10004

MAILED
FEB 14 2011
OFFICE OF PETITIONS

In re Application of	:	
John S. O'Brien et al.	:	
Application No. 11/787,486	:	DECISION ON PETITION
Filed: September 8, 2005	:	
Attorney Docket No. **438P2251**	:	

This is a decision on the petition under the unintentional provisions of 37 CFR 1.137(b), filed January 5, 2011, to revive the above-identified application.

There is no indication that the petition is signed by a registered patent attorney or patent agent of record. However, in accordance with 37 CFR 1.34, the signature of John Murray appearing on the correspondence shall constitute a representation to the United States Patent and Trademark Office that he is authorized to represent the particular party in whose behalf he acts. If, John Murray desires to be acknowledged as the attorney or record in this application file, the appropriate power of attorney documents must be submitted.

This application became abandoned for failure to timely file a reply within the meaning of 37 CFR 1.113 to the final Office action of June 17, 2010. The proposed reply required for consideration of a petition to revive must be a Notice of Appeal (and appeal fee required by 37 CFR 41.20(b)(2)), an amendment that *prima facie* places the application in condition for allowance, a Request for Continued Examination (RCE) and submission (37 CFR 1.114), or the filing of a continuing application under 37 CFR 1.53(b). See MPEP 711.03(c)(III)(A)(2). No extensions of time pursuant to the provisions of 37 CFR 1.136(a) were obtained. Accordingly, the date of abandonment of this application is September 18, 2010.

The petition is hereby **GRANTED**.

The petition satisfies the requirements of 37 CFR 1.137(b) in that petitioner has supplied (1) the reply in the form of a Notice of Appeal; (2) the petition fee of $810; and (3) a proper statement of unintentional delay.

The two-month period for filing an appeal brief under 37 CFR 41.37 (accompanied by the fee required by 37 CFR 41.20(b)(2)), runs from the date of this decision.

Telephone inquiries concerning this decision should be directed to JoAnne Burke at (571) 272-4584.

This application is being referred to Technology Center AU 1649 to await the filing of an appeal brief or for such other appropriate reply as may be submitted to continue prosecution of the application.

JoAnne Burke
Petitions Examiner
Office of Petitions

UNITED STATES PATENT AND TRADEMARK OFFICE

Commissioner for Patents
United States Patent and Trademark Office
P.O. Box 1450
Alexandria, VA 22313-1450
www.uspto.gov

MAILED

SEP 24 2010

OFFICE OF PETITIONS

SHAY GLENN LLP
2755 CAMPUS DRIVE
SUITE 210
SAN MATEO, CA 94403

In re Application of	:	
David Elias HEGEMAN, et al	:	
Application No. 11/787,543	:	DECISION ON PETITION
Filed: April 16, 2007	:	TO WITHDRAW
Attorney Docket No. 10112-701.502	:	FROM RECORD
	:	

This is a decision on the Request to Withdraw as attorney or agent of record under 37 C.F.R. § 1.36(b), filed August 16, 2010.

The request is **NOT APPROVED because it is moot.**

A review of the file record indicates that the power of attorney to Douglas C. Limbach and the attorneys associated with Customer No. 66854, has been revoked by the assignee of the patent application on September 3, 2010. Accordingly, the request to withdraw under 37 C.F.R. § 1.36(b) is moot.

Telephone inquires concerning this decision should be directed to undersigned at 571-272- 6735.

/dcg/
Diane C. Goodwyn
Petitions Examiner
Office of Petitions

cc: PATENT DEPT.
INTUITIVE SURGICAL OPERATIONS, INC.,
1266 KIFER ROAD BLDG. 101
SUNNYVALE CA 94086

UNITED STATES PATENT AND TRADEMARK OFFICE

Commissioner for Patents
United States Patent and Trademark Office
P.O. Box 1450
Alexandria, VA 22313-1450
www.uspto.gov

SHAY GLENN, LLP
2755 CAMPUS DRIVE
SUITE 210
SAN MATEO, CA 94403

MAILED

SEP 27 2010

OFFICE OF PETITIONS

In re Application of	:	
Cameron D. Hinman, et al.	:	
Application No. 11/787,599	:	DECISION ON PETITION
Filed: April 16, 2007	:	TO WITHDRAW
Attorney Docket No. 10112-7043201	:	FROM RECORD
	:	

This is a decision on the Request to Withdraw as attorney or agent of record under 37 C.F.R. § 1.36(b), filed August 13, 2010.

The request is **DISMISSED** as moot.

A review of the file record indicates that the power of attorney to Shay Glenn, LLP has been revoked by the assignee of the patent application on September 3, 2010. Accordingly, the request to withdraw under 37 C.F.R. § 1.36(b) is moot.

All future communications from the Office will continue to be directed to the below-listed address until otherwise notified by applicant.

Telephone inquires concerning this decision should be directed to undersigned at 571-272-1642.

/AMW/
April M. Wise
Petitions Examiner
Office of Petitions

UNITED STATES PATENT AND TRADEMARK OFFICE

Commissioner for Patents
United States Patent and Trademark Office
P.O. Box 1450
Alexandria, VA 22313-1450
www.uspto.gov

PATENT DEPT - INTUITIVE SURGICAL OPERATIONS
1266 KIFER RD BLDG 101
SUNNYVALE CA 94086

MAILED
FEB 09 2011
OFFICE OF PETITIONS

In re Application of	:	
Hinman, et al.	:	
Application No. 11/787,599	:	ON PETITION
Filed: April 16, 2007	:	
Attorney Docket No. 10112-704.201	:	

This is in response to petition to revive an unintentionally abandoned application under 37 CFR 1.137(b), filed December 24, 2010.

The petition under 37 CFR 1.137(b) is **GRANTED**.

The above-identified application became abandoned for failure to timely file a proper response to the final Office action, mailed May 13, 2010, which set a shortened statutory period for reply of three months. Applicant filed an Amendment on September 14, 2010, made timely by obtaining a one month extension of time and by including a Certificate of Transmission dated September 20, 2010. However, the Examiner mailed an Advisory Action on October 4, 2010, stating that the Amendment would not be entered because it failed to place the application in condition for allowance. As such, the application became abandoned on September 14, 2010. The mailing of this decision precedes the mailing of a courtesy Notice of Abandonment.

With the instant petition, petitioner paid the petition fee, made the proper statement of unintentional delay, and submitted the required reply in the form of an RCE.

The application is being forwarded to Group Art Unit 3734 for consideration of the RCE, filed December 24, 2010.

Telephone inquiries concerning this decision may be directed to the undersigned at 571-272-3207.

Cliff Congo
Petitions Attorney
Office of Petitions

UNITED STATES PATENT AND TRADEMARK OFFICE

Commissioner for Patents
United States Patent and Trademark Office
P.O. Box 1450
Alexandria, VA 22313-1450
www.uspto.gov

PATENT DEPT
INTUITIVE SURGICAL OPERATIONS, INC.
1266 KIFER RD
BUILDING 101
SUNNYVALE, CA 94086

MAILED

OCT 12 2010

OFFICE OF PETITIONS

In re Application of	:	
Cameron D. Hinman	:	
Application No. 11/787,605	:	DECISION ON PETITION
Filed: April 16, 2007	:	TO WITHDRAW
Attorney Docket No. 10112-703.201	:	FROM RECORD
	:	

This is a decision on the Request to Withdraw as attorney or agent under 37 C.F.R. § 1.36(b) or 37 C.F.R. § 10.40 filed August 16, 2010.

The request is **APPROVED**.

A review of the file record indicates that Douglas C. Limbach: (1) does not have power of attorney in this patent application; and (2) has been employed or otherwise engaged in the proceedings in this patent application. In view of the present decision, Douglas C. Limbach has been withdrawn from the present application and may not prepare or submit papers under 37 C.F.R. § 1.34, or correspond in any manner in this application unless appointed in an acceptable power of attorney under 37 C.F.R. § 1.32(b).

Telephone inquires concerning this decision should be directed to Irvin Dingle at 571-272-3210.

Irvin Dingle
Petitions Examiner
Office of Petitions

cc: Douglas C. Limbach
2755 Campus Drive, Suite 210
San Mateo, CA 94403

UNITED STATES PATENT AND TRADEMARK OFFICE

Commissioner for Patents
United States Patent and Trademark Office
P.O. Box 1450
Alexandria, VA 22313-1450
www.uspto.gov

PATENT DEPT – INTUITIVE SURGICAL OPERATIONS
1266 KIFER RD BLDG 101
SUNNYVALE CA 94086

MAILED

AUG 18 2011

OFFICE OF PETITIONS

In re Application of	:	
HINMAN	:	
Application No. 11/787,605	:	DECISION ON PETITION
Filed: April 16, 2007	:	
Attorney Docket No. NVRE703-201	:	

This is a decision on the petition under the unintentional provisions of 37 CFR 1.137(b), filed July 15, 2011, to revive the above-identified application.

The petition is **GRANTED**.

The application became abandoned for failure to reply in a timely manner to the Restriction Requirement, mailed August 5, 2010, which set a shortened statutory period for reply of one (1) month or thirty (30) days (whichever is later). No extensions of time under the provisions of 37 CFR 1.136(a) were obtained. Accordingly, the application became abandoned on September 6, 2010. A Notice of Abandonment was mailed July 14, 2011.

The petition satisfies the requirements of 37 CFR 1.137(b) in that petitioner has supplied (1) the reply in the form of an election, (2) the petition fee of $1620; and (3) the required statement of unintentional delay.

The application file does not indicate a change of address has been filed in this case, although the address given on the petition differs from the address of record. A change of address should be filed in this case in accordance with MPEP 601.03. A courtesy copy of this decision is being mailed to the address noted on the petition. However, until otherwise instructed, all future correspondence regarding this application will be mailed solely to the address of record.

Telephone inquiries concerning this decision should be directed to the undersigned at (571) 272-6735.

This application is being referred to Technology Center AU 3734 for appropriate action by the Examiner in the normal course of business.

/Diane C. Goodwyn/
Diane C. Goodwyn
Petitions Examiner
Office of Petitions

cc: MIKIO ISHIMARU
2055 GATEWAY PLACE, SUITE 700
SAN JOSE, CA 95110

UNITED STATES PATENT AND TRADEMARK OFFICE

Commissioner for Patents
United States Patent and Trademark Office
P.O. Box 1450
Alexandria, VA 22313-1450
www.uspto.gov

Shay Glenn, LLP
2755 Campus Drive
Suite 210
San Mateo, CA 94403

MAILED

SEP 30 2010

OFFICE OF PETITIONS

In re Application of	:	
Cameron D. Hinman et al.	:	
Application No. 11/787,607	:	DECISION ON PETITION
Filed: April 16, 2007	:	TO WITHDRAW
Attorney Docket No. 10112-702-201	:	FROM RECORD
	:	

This is a decision on the renewed Request to Withdraw as attorney or agent of record under 37 C.F.R. § 1.36(b), filed August 16, 2010.

The request is **moot because a revocation of power of attorney has been filed**.

A review of the file record indicates that the power of attorney to all attorneys/agents associated with customer number 66854 have been revoked by the assignee of the patent application on September 3, 2010. Accordingly, the request to withdraw under 37 C.F.R. § 1.36(b) is moot.

All future communications from the Office will continue to be directed to the below listed until otherwise notified by applicant.

Telephone inquires concerning this decision should be directed to Kimberly Inabinet at 571-272-4618.

/Kimberly Inabinet/

Kimberly Inabinet
Petitions Examiner
Office of Petitions

cc: Patent Department
Intuitive Surgical Operations, Inc.
1266 Kifer Road, Bldg. 94086

UNITED STATES PATENT AND TRADEMARK OFFICE

Commissioner for Patents
United States Patent and Trademark Office
P.O. Box 1450
Alexandria, VA 22313-1450
www.uspto.gov

PATENT DEPT – INTUITIVE
SURGICAL OPERATIONS
1266 KIFER RD BLDG 101
SUNNYVALE CA 94086

MAILED

AUG 15 2011

OFFICE OF PETITIONS

In re Application of	:	
Hinman, et al.	:	
Application No. 11787,607	:	DECISION
Filed/Deposited: 16 April, 2007	:	
Attorney Docket No. NVRE702-201	:	

This is a decision on the papers filed on 11 July, 2011, for revival of an application abandoned due to unintentional delay under 37 C.F.R. §1.137(b).

NOTE:

It is not apparent whether the person signing the statement of unintentional delay was in a position to have firsthand or direct knowledge of the facts and circumstances of the delay at issue.

Nevertheless, such statement is being treated as having been made as the result of a reasonable inquiry into the facts and circumstances of such delay.[1]

In the event that such an inquiry has not been made, Petitioner **must** make such an inquiry.

If such inquiry results in the discovery that it is not correct that the entire delay in filing the required reply from the due date for the reply until the filing of a grantable petition pursuant to 37 C.F.R. §1.137(b) was unintentional, Petitioner **must** notify the Office.

The petition pursuant to 37 C.F.R. §1.137(b) is **GRANTED**.

[1] See 37 C.F.R. §11.18(b), formerly §10.18(b) and Changes to Patent Practice and Procedure; Final Rule Notice, 62 Fed. Reg. 53131, 53178 (October 10, 1997), 1203 Off. Gaz. Pat. Office 63, 103 (October 21, 1997).

As to the Allegations
of Unintentional Delay

The requirements of a grantable petition pursuant to 37 C.F.R. §1.137(b) are the petition and fee therefor, a reply, a proper statement and/or showing of unintentional delay under the regulation, and, where applicable, a terminal disclaimer and fee

Petitioners' attentions always are directed to the guidance in the Commentary at MPEP §711.03(c)(II).

BACKGROUND

The record reflects as follows:

Applicant failed to reply timely and properly to the final Office action mailed on 13 August, 2010, with reply due absent extension of time on or before 13 November, 2010.

The application went abandoned by operation of law after 13 November, 2010.

The Office mailed the Notice of Abandonment on 10 May, 2011.

On 11 July, 2011, Petitioner filed, *inter alia*, a petition pursuant to 37 C.F.R. §1.137(b), with fee, with a statement of unintentional delay and a reply in the form of a request for continued examination (RCE) and fee and a submission under the provisions of 37 C.F.R. §1.114 in the form of an amendment

As noted above, it is not apparent whether the person signing the statement of unintentional delay was in a position to have firsthand or direct knowledge of the facts and circumstances of the delay at issue.

Nevertheless, such statement is being treated as having been made as the result of a reasonable inquiry into the facts and circumstances of such delay.[2]

In the event that such an inquiry has not been made, Petitioner **must** make such an inquiry.

If such inquiry results in the discovery that it is not correct that the entire delay in filing the required reply from the due date for the reply until the filing of a grantable petition pursuant to 37 C.F.R. §1.137(b) was unintentional, Petitioner **must** notify the Office.

---

[2] See 37 C.F.R. §11.18(b), formerly §10.18(b) and Changes to Patent Practice and Procedure; Final Rule Notice, 62 Fed. Reg. 53131, 53178 (October 10, 1997), 1203 Off. Gaz. Pat. Office 63, 103 (October 21, 1997).

Petitioners' attentions always are directed to the guidance in the Commentary at MPEP §711.03(c) as to the showing regarding unintentional delay and a petition pursuant to 37 C.F.R. §1.137(b).

The availability of applications and application papers online to applicants/practitioners who diligently associate their Customer Number with the respective application(s) now provides an applicant/practitioner on-demand information as to events/transactions in an application.

Out of an abundance of caution, Petitioners always are reminded that those registered to practice and all others who make representations before the Office **must** inquire into the underlying facts of representations made to the Office and support averments with the appropriate documentation–since all owe to the Office the continuing duty to disclose.[3]

STATUTES, REGULATIONS AND ANALYSIS

Congress has authorized the Commissioner to revive an application if the delay is shown to the satisfaction of the Commissioner to have been "unavoidable." 35 U.S.C. §133 (1994).[4]
The regulations at 37 C.F.R. §1.137(a) and (b) set forth the requirements for a Petitioner to revive a previously unavoidably or unintentionally, respectively, abandoned application under this congressional grant of authority.

Unintentional delays are those that do not satisfy the very strict statutory and regulatory requirements of unavoidable delay, and, by definition, are not intentional.[5]))

As to Allegations of Unintentional Delay

The requirements of a grantable petition pursuant to 37 C.F.R. §1.137(b) are the petition and fee therefor, a reply, a proper statement of unintentional delay under the regulation, and, where applicable, a terminal disclaimer and fee.

---

[3] See supplement of 17 June, 1999. The Patent and Trademark Office is relying on petitioner's duty of candor and good faith and accepting a statement made by Petitioner. See Changes to Patent Practice and Procedure, 62 Fed. Reg. at 53160 and 53178, 1203 Off. Gaz. Pat. Office at 88 and 103 (responses to comments 64 and 109)(applicant obligated under 37 C.F.R. §10.18 to inquire into the underlying facts and circumstances when providing statements to the Patent and Trademark Office).

[4] 35 U.S.C. §133 provides:

35 U.S.C. §133 Time for prosecuting application.

Upon failure of the applicant to prosecute the application within six months after any action therein, of which notice has been given or mailed to the applicant, or within such shorter time, not less than thirty days, as fixed by the Commissioner in such action, the application shall be regarded as abandoned by the parties thereto, unless it be shown to the satisfaction of the Commissioner that such delay was unavoidable.

[5] Therefore, by example, an unintentional delay in the reply might occur if the reply and transmittal form are to be prepared for shipment by the US Postal Service, but other pressing matters distract one's attention and the mail is not timely deposited for shipment.

It appears that the requirements under the rule have been satisfied.

CONCLUSION

Accordingly, the petition pursuant to 37 C.F.R. §1.137(b) is **granted**.

The instant application is released to the Technology Center/AU 3779 for further processing in due course.

Petitioner may find it beneficial to view Private PAIR within a fortnight of the instant decision to ensure that the revival has been acknowledged by the TC/AU in response to this decision. It is noted that all inquiries with regard to status need be directed to the TC/AU where that change of status must be effected—that does not occur in the Office of Petitions.

Telephone inquiries regarding this decision may be directed to the undersigned at (571) 272-3214—it is noted, however , that all practice before the Office is in writing (see: 37 C.F.R. §1.2[6]) and the proper authority for action on any matter in this regard are the statutes (35 U.S.C.), regulations (37 C.F.R.) and the commentary on policy (MPEP). Therefore, no telephone discussion may be controlling or considered authority for Petitioner's action(s).

/John J. Gillon, Jr./
John J. Gillon, Jr.
Senior Attorney
Office of Petitions

[6] The regulations at 37 C.F.R. §1.2 provide:
§1.2 Business to be transacted in writing.
All business with the Patent and Trademark Office should be transacted in writing. The personal attdance of applicants or their attorneys or agents at the Patent and Trademark Office is unnecessary. The action of the Patent and Trademark Office will be based exclusively on the written record in the Office. No attention will be paid to any alleged oral promise, stipulation, or understanding in relation to which there is disagreement or doubt.

UNITED STATES PATENT AND TRADEMARK OFFICE

Commissioner for Patents
United States Patent and Trademark Office
P.O. Box 1450
Alexandria, VA 22313-1450
www.uspto.gov

MAILED

SEP 24 2010

OFFICE OF PETITIONS

SHAY GLENN LLP
2755 CAMPUS DRIVE
SUITE 210
SAN MATEO, CA 94403

In re Application of	:	
David Elias HEGEMAN, et al	:	
Application No. 11/787,608	:	DECISION ON PETITION
Filed: April 16, 2007	:	TO WITHDRAW
Attorney Docket No. 10112-705.201	:	FROM RECORD
	:	

This is a decision on the Request to Withdraw as attorney or agent of record under 37 C.F.R. § 1.36(b), filed August 16, 2010.

The request is **NOT APPROVED because it is moot.**

A review of the file record indicates that the power of attorney to Douglas C. Limbach and the attorneys associated with Customer No. 66854, has been revoked by the assignee of the patent application on September 3, 2010. Accordingly, the request to withdraw under 37 C.F.R. § 1.36(b) is moot.

Telephone inquires concerning this decision should be directed to undersigned at 571-272- 6735.

/dcg/
Diane C. Goodwyn
Petitions Examiner
Office of Petitions

cc: PATENT DEPT.
INTUITIVE SURGICAL OPERATIONS, INC.,
1266 KIFER ROAD BLDG. 101
SUNNYVALE CA 94086

SPE RESPONSE FOR CERTIFICATE OF CORRECTION

DATE : 08-17-11

TO SPE OF : ART UNIT 2856

SUBJECT : Request for Certificate of Correction for Appl. No.: 11/787693 Patent No.: 7631560

CofC mailroom date: 08-10-11

Please respond to this request for a certificate of correction within 7 days.

FOR IFW FILES:

Please review the requested changes/corrections as shown in the **COCIN** document(s) in the IFW application image. No new matter should be introduced, nor should the scope or meaning of the claims be changed.

Please complete the response (see below) and forward the completed response to scanning using document code **COCX**.

FOR PAPER FILES:

Please review the requested changes/corrections as shown in the attached certificate of correction. Please complete this form (see below) and forward it with the file to:

Certificates of Correction Branch (CofC)
Randolph Square – 9D10-A
Palm Location 7580

Note: _____

_____

Angela Green 571.272.9005

CofC Branch 703-756-1814

Thank You For Your Assistance

The request for issuing the above-identified correction(s) is hereby:

Note your decision on the appropriate box.

- ☒ **Approved** — All changes apply.
- ☐ **Approved in Part** — Specify below which changes **do not** apply.
- ☐ **Denied** — State the reasons for denial below.

Comments: _____

HEZRON WILLIAMS
SUPERVISORY PATENT EXAMINER
TECHNOLOGY CENTER 2800

SPE Hezron E. Williams **Art Unit** 2856

UNITED STATES PATENT AND TRADEMARK OFFICE

Commissioner for Patents
United States Patent and Trademark Office
P.O. Box 1450
Alexandria, VA 22313-1450
www.uspto.gov

MAILED

SEP 14 2010

OFFICE OF PETITIONS

J. MICHAEL NEARY
53939 PINE GROVE ROAD
LA PINE OR 97739

In re Application of	:
Kychakoff et al.	:
Application No. 11/787,712	: DECISION ON PETITION
Filed: April 17, 2007	: UNDER 37 CFR 1.78(a)(3)
Attorney Docket No. CSI-US7	:

This is a decision on the renewed petition under 37 CFR 1.78(a)(3), filed August 23, 2010, to accept an unintentionally delayed claim under 35 U.S.C. § 120 for the benefit of priority to the prior-filed nonprovisional applications set forth in the amendment previously filed on February 25, 2010.

The petition is **DISMISSED**.

A petition for acceptance of a claim for late priority under 37 CFR 1.78(a)(3) is only applicable to those applications filed on or after November 29, 2000. Further, the petition is appropriate only after the expiration of the period specified in 37 CFR 1.78(a)(2)(ii). In addition, the petition under 37 CFR 1.78(a)(3) must be accompanied by:

(1) the reference required by 35 U.S.C. § 120 and 37 CFR 1.78(a)(2)(i) of the prior-filed application(s), unless previously submitted;
(2) the surcharge set forth in § 1.17(t); and
(3) a statement that the entire delay between the date the claim was due under 37 CFR 1.78(a)(2)(ii) and the date the claim was filed was unintentional. The Commissioner may require additional information where there is a question whether the delay was unintentional.

The instant petition still does not comply with item (1) above.

With regards to item (1), when a later-filed application is claiming the benefit of a prior-filed nonprovisional application under 35 U.S.C. 120, 121, or 365(c), the later-filed application must be copending with the prior application or with an intermediate nonprovisional application similarly entitled to the benefit of the filing date of the prior application. Copendency is defined in the clause which requires that the later-filed application must be filed before: (A) the patenting of the prior application; (B) the abandonment of the prior application; or (C) the termination of proceedings in the prior application.

Petitioner contends that "However, there was co-pendency between the first application (10/168,277) and a second intermediate application (11/137,089) for which priority is

also claimed, and between the second intermediate application and the instant application. Accordingly, Applicants believe that this uninterrupted chain of co-pendency entitles Applicant's to claim priority back to the first application in the chain."

Petitioner is currently requesting priority to the non-copending application 10/168,277 in the instant application. The relationship between 10/168,277 and 11/137,089 may exist; however, petitioner is requesting this relationship be recognized in that order as being copending with the instant application.

Sometimes a pending application is one of a series of applications wherein the pending application is not copending with the first filed application but is copending with an intermediate application entitled to the benefit of the filing date of the first application. If applicant wishes that the pending application have the benefit of the filing date of the first filed application, applicant must, besides making reference to the intermediate application, also make reference to the first application. See *Sticker Indus. Supply Corp. v. Blaw-Knox Co.*, 405 F.2d 90, 160 USPQ 177 (7th Cir. 1968) and *Hovlid v. Asari*, 305 F. 2d 747, 134 USPQ 162 (9th Cir. 1962).

The reference to the prior applications must identify all of the prior applications and indicate the relationship (i.e., continuation, divisional, or continuation-in-part) between each nonprovisional application in order to establish copendency throughout the entire chain of prior applications. Appropriate references must be made in each intermediate application in the chain of prior applications. If an applicant desires, for example, the following benefit claim: "this application is a continuation of Application No. C, filed ---, which is a continuation of Application No. B, filed ---, which claims the benefit of provisional Application No. A, filed ---," then Application No. C must have a reference to Application No. B and provisional Application No. A, and Application No. B must have a reference to provisional Application No. A.

Accordingly, before the petition under 37 CFR 1.78(9)(3) can be granted, a substitute amendment complying with the above, along with a renewed petition under 37 CFR 1.78(a)(3), is required. No further petition fee is required.

Further correspondence with respect to this matter should be addressed as follows:

By mail: Mail Stop PETITIONS
Commissioner for Patents
Post Office Box 1450
Alexandria, VA 22313-1450

By hand: Customer Window located at:
U.S. Patent and Trademark Office
Customer Service Window Randolph Building
401 Dulany Street
Alexandria, VA 22314

By fax: (571) 273-8300
ATTN: Office of Petitions

Any questions concerning this matter may be directed to Joan Olszewski at (571) 272-7751.

/Liana Walsh/
Liana Walsh
Petitions Examiner
Office of Petitions

UNITED STATES PATENT AND TRADEMARK OFFICE

Commissioner for Patents
United States Patent and Trademark Office
P.O. Box 1450
Alexandria, VA 22313-1450
www.uspto.gov

J. MICHAEL NEARY
53939 PINE GROVE ROAD
LA PINE OR 97739

MAILED
MAR 15 2011
OFFICE OF PETITIONS

In re Application of	:	
Kychakoff, et al.	:	
Application No. 11/787,712	:	DECISION ON PETITION
Filed: 17 April, 2007	:	
Attorney Docket No. CSI-US7	:	

This is a decision on the petition filed pursuant to 37 C.F.R. §1.78(a)(3), on 20 September, 2010, and supplemented on 4 January, 2011, to accept an unintentionally delayed claim under 35 U.S.C. §120 for the benefit of priority to the prior-filed nonprovisional applications set forth in the amendment filed with the petition.

The petition is **DISMISSED**.

A petition for acceptance of a claim for late priority under 37 C.F.R. §1.78(a)(3) is only applicable to those applications filed on or after November 29, 2000. Further, the petition is appropriate only after the expiration of the period specified in 37 C.F.R. §1.78(a)(2)(ii). In addition, the petition under 37 C.F.R. §1.78(a)(3) must be accompanied by:

(1) the reference required by 35 U.S.C. §120 and 37 C.F.R. §1.78(a)(2)(i) of the prior-filed application, unless previously submitted;
(2) the surcharge set forth in §1.17(t); and
(3) a statement that the entire delay between the date the claim was due under 37 C.F.R. §1.78(a)(2)(ii) and the date the claim was filed was unintentional. The Director may require additional information where there is a question whether the delay was unintentional.

Thus, the petition lacks item (1), above.

Twice before Petitioner was reminded that copendency was required as between the instant application and that to which he wished to claim priority.

Petitioner responded that copendency existed between the instant application and Application No. 11/137,089 (the '089 application) and between the '089 application and Application No. 10/168,277 (the '277 application)—and it is the '277 application to which Petitioner sought to claim priority.

Whether the applications were pending on the same dates is not solely dispositive of the question of copendency here. A review of Office records, and of Patent No. 7,437,025 (the '025 patent), which issued from the '089 application—reveals no claim for priority in the '025 patent or the underlying '089 application to the '277 application (which issued as Patent No. 6,909,816 (the '816 patent)).

Thus, the claim for priority, which Petitioner seeks to make herein, is not proper because the reference is not proper.

As noted above, while, the surcharge and statement were submitted, the petition does not comply with the requirements of the regulations at 37 C.F.R. §1.78(a)(3) as to reference.

Because the record does not support Petitioner's attempt to identify the priority claimed, the amendment fails to comply with the provisions of 37 C.F.R. §1.78(a)(2)(i) and is therefore unacceptable.

Accordingly, before the petition under 37 C.F.R. §1.78 can be granted, a renewed petition under 37 C.F.R. §1.78 and either an Application Data Sheet or a substitute amendment (complying with 37 C.F.R. §1.121 and 37 C.F.R. §1.76(b)(5)) correcting the priority claims made are required.

Questions concerning this matter may be directed to John Gillon at (571) 272-3214. All other inquiries concerning either the examination procedures or status of the application should be directed to the Technology Center.

Chris Bottorf
Supervisor
Office of Petitions

UNITED STATES PATENT AND TRADEMARK OFFICE

Commissioner for Patents
United States Patent and Trademark Office
P.O. Box 1450
Alexandria, VA 22313-1450
www.uspto.gov
DIW Dec-10

THOMAS P. GRODT ATTORNEY AT LAW
4 PEABOY ROAD ANNEX
DERRY NH 03038

MAILED
DEC 09 2010
OFFICE OF PETITIONS

In re Application of	:	
Nancy-Jane Sweeney	:	
Application Number: 11/787729	:	ON PETITION
Filing Date: 04/17/2007	:	
Attorney Docket Number:	:	
SWEENEY-001	:	

This is a decision in response to the petition under 37 CFR 1.137(b) filed on October 19, 2010, to revive the above-identified application.

The petition is **GRANTED**.

This application became abandoned on November 7, 2009, for failure to timely respond to the Notice of Allowance and Fee(s) Due mailed on August 6, 2009, which set a three (3) month statutory period for reply. Notice of Abandonment was mailed on November 19, 2009.

Receipt of the issue and publication fees is acknowledged.

The application is referred to the Office of Data Management for processing into a patent.

Telephone inquiries concerning this matter may be directed to the undersigned at (571) 272-3231.

DWood
Douglas I. Wood
Senior Petitions Attorney
Office of Petitions

UNITED STATES PATENT AND TRADEMARK OFFICE

Commissioner for Patents
United States Patent and Trademark Office
P.O. Box 1450
Alexandria, VA 22313-1450
www.uspto.gov

HUSCH BLACKWELL LLP
HUSCH BLACKWELL SANDERS LLP WELSH & KATZ
120 S RIVERSIDE PLAZA
22ND FLOOR
CHICAGO, IL 60606

MAILED
NOV 07 2011
OFFICE OF PETITIONS

In re Application of	:	
Shunpei Yamazaki, et al.	:	
Application No.: 11/787,749	:	ON PETITION
Filed: April 17, 2007	:	
Attorney Docket No.: 0553-0195.02	:	

This is a decision on the petition, filed November 4, 2011, under 37 CFR 1.313(c)(2) to withdraw the above-identified application from issue after payment of the issue fee.

The petition is **GRANTED**.

The above-identified application is withdrawn from issue for consideration of a submission under 37 CFR 1.114 (request for continued examination). See 37 CFR 1.313(c)(2).

Petitioner is advised that the issue fee paid on September 22, 2011, cannot be refunded. If, however, this application is again allowed, petitioner may request that it be applied towards the issue fee required by the new Notice of Allowance.[1]

Telephone inquiries relating to this decision should be directed to the undersigned at (571) 272-3204.

The application is being referred to Technology Center AU 2829 for further processing of the request for continued examination and for consideration of the concurrently filed Information Disclosure Statement (IDS).

/SDB/

Sherry D. Brinkley
Petitions Examiner
Office of Petitions

[1] *The request to apply the issue fee to the new Notice may be satisfied by completing and returning the new Part B – Fee(s) Transmittal Form (along with any balance due at the time of submission). Petitioner is advised that the Issue Fee Transmittal Form must be completed and timely submitted to avoid abandonment of the application.*

UNITED STATES PATENT AND TRADEMARK OFFICE

Commissioner for Patents
United States Patent and Trademark Office
P.O. Box 1450
Alexandria, VA 22313-1450
www.uspto.gov

KENYON & KENYON LLP
ONE BROADWAY
NEW YORK, NY 10004

MAILED

NOV 24 2010

OFFICE OF PETITIONS

In re Application of	:	
Chihaya ADACHI, et *al.*	:	
Application No. 11/787,753	:	DECISION GRANTING PETITION
Filed: April 16, 2007	:	UNDER 37 CFR 1.313(c)(2)
Attorney Docket No. **10020/18104**	:	

This is a decision on the petition under 37 CFR 1.313(c)(2), filed November 17, 2010, to withdraw the above-identified application from issue after payment of the issue fee.

The petition is **GRANTED**.

The above-identified application is withdrawn from issue for consideration of a submission under 37 CFR 1.114 (request for continued examination). *See* 37 CFR 1.313(c)(2).

Petitioner is advised that the issue fee paid on October 7, 2010 cannot be refunded. If, however, this application is again allowed, petitioner may request that it be applied towards the issue fee required by the new Notice of Allowance.[1]

Telephone inquiries should be directed to the undersigned at (571) 272-7253.

This application is being referred to Technology Center AU 1786 for processing of the request for continued examination under 37 CFR 1.114 and for consideration of the concurrently filed amendment.

/Monica A. Graves/
Petitions Examiner, Office of Petitions

---

[1] *The request to apply the issue fee to the new Notice may be satisfied by completing and returning the new Part B – Fee(s) Transmittal Form (along with any balance due at the time of submission). Petitioner is advised that the Issue Fee Transmittal Form must be completed and timely submitted to avoid abandonment of the application.*

UNITED STATES PATENT AND TRADEMARK OFFICE

Commissioner for Patents
United States Patent and Trademark Office
P.O. Box 1450
Alexandria, VA 22313-1450
www.uspto.gov

Paper No.

Montgomery Patent and Design, LLC
375 Southpointe Blvd., Suite 100-110
Canonsburg PA 15317

MAILED
MAY 20 2011
OFFICE OF PETITIONS

In re Application of	:	
Whatcott	:	
Application No. 11/787,754	:	DECISION ON PETITION
Filed: April 17, 2007	:	PURSUANT TO
Attorney Docket No.: SCH-041307SAI-1	:	37 C.F.R. § 1.181(A)
Title: CONCRETE FORMING SCREED AIDS	:	

This is a decision on the petition filed April 13, 2011, pursuant to 37 C.F.R. § 1.181(a), requesting that the holding of abandonment in the above-identified application be withdrawn.

This petition pursuant to 37 C.F.R. § 1.181(a) is **DISMISSED**.

Receipt of the concurrently submitted amendment and remarks is acknowledged.

BACKGROUND

The above-identified application became abandoned for failure to file a proper response to the "notice requiring excess claim fees," (notice) mailed July 28, 2010, which set a shortened statutory period to reply of one month. No response was received, and no extensions of time under the provisions of 37 C.F.R. § 1.136(a) were obtained. Accordingly, the above-identified application became abandoned on August 29, 2010. A Notice of abandonment was mailed on April 4, 2011.

RELEVANT PORTIONS OF THE C.F.R. AND MPEP

37 C.F.R. § 1.134 sets forth, *in toto*:

> An Office action will notify the applicant of any non-statutory or shortened statutory time period set for reply to an Office action. Unless the applicant is notified in writing that a reply is required in less than six months, a maximum period of six months is allowed.

37 C.F.R. § 1.135 sets forth, *in toto*:

> (a) If an applicant of a patent application fails to reply within the time period provided under § 1.134 and § 1.136, the application will become abandoned unless an Office action indicates otherwise.
> (b) Prosecution of an application to save it from abandonment pursuant to paragraph (a) of this section must include such complete and proper reply as the condition of the application may require. The admission of, or refusal to admit, any amendment after final rejection or any amendment not responsive to the last action, or any related proceedings, will not operate to save the application from abandonment.
> (c) When reply by the applicant is a bona fide attempt to advance the application to final action, and is substantially a complete reply to the non-final Office action, but consideration of some matter or compliance with some requirement has been inadvertently omitted, applicant may be given a new time period for reply under § 1.134 to supply the omission.

Section 711.03(c)(I)(A) of the MPEP sets forth, *in toto*:

> In *Delgar v. Schulyer*, 172 USPQ 513 (D.D.C. 1971), the court decided that the Office should mail a new Notice of Allowance in view of the evidence presented in support of the contention that the applicant's representative did not receive the original Notice of Allowance. Under the reasoning of *Delgar*, an allegation that an Office action was never received may be considered in a petition to withdraw the holding of abandonment. If adequately supported, the Office may grant the petition to withdraw the holding of abandonment and remail the Office action. That is, the reasoning of Delgar is applicable regardless of whether an application is held abandoned for failure to timely pay the issue fee (35 U.S.C. 151) or for failure to prosecute (35 U.S.C. 133).
>
> To minimize costs and burdens to practitioners and the Office, the Office has modified the showing required to establish nonreceipt of an Office action. **The showing required to establish nonreceipt of an Office communication must include a statement from the practitioner describing the system used for recording an Office action received at the correspondence address of record with the USPTO. The statement should establish that the docketing system is sufficiently reliable. It is expected that the record would**

include, but not be limited to, the application number, attorney docket number, the mail date of the Office action and the due date for the response.

Practitioner must state that the Office action was not received at the correspondence address of record, and that a search of the practitioner's record(s), including any file jacket or the equivalent, and the application contents, indicates that the Office action was not received. A copy of the record(s) used by the practitioner where the non-received Office action would have been entered had it been received is required.

A copy of the practitioner's record(s) required to show non-receipt of the Office action should include the master docket for the firm. That is, if a three month period for reply was set in the nonreceived Office action, a copy of the master docket report showing all replies docketed for a date three months from the mail date of the nonreceived Office action must be submitted as documentary proof of nonreceipt of the Office action. If no such master docket exists, the practitioner should so state and provide other evidence such as, but not limited to, the following: the application file jacket; incoming mail log; calendar; reminder system; or the individual docket record for the application in question.

The showing outlined above may not be sufficient if there are circumstances that point to a conclusion that the Office action may have been lost after receipt rather than a conclusion that the Office action was lost in the mail (e.g., if the practitioner has a history of not receiving Office actions).

Evidence of nonreceipt of an Office communication or action (e.g., Notice of Abandonment or an advisory action) other than that action to which reply was required to avoid abandonment would not warrant withdrawal of the holding of abandonment. Abandonment takes place by operation of law for failure to reply to an Office action or timely pay the issue fee, not by operation of the mailing of a Notice of Abandonment. See *Lorenz v. Finkl*, 333 F.2d 885, 889-90, 142 USPQ 26, 29-30 (CCPA 1964); *Krahn v. Commissioner*, 15 USPQ2d 1823, 1824 (E.D. Va 1990); *In re Application of Fischer*, 6 USPQ2d 1573, 1574 (Comm'r Pat. 1988).

(Emphases added).

ANALYSIS

With this petition, Petitioner has stated that the notice of April 4, 2011 was not received at the correspondence address of record[1] and that a search of the file jacket and docket records indicates that the Office communication was not received.[2]

---

1 Petition, page 1.
2 Id.

Petitioner's assertion of non-receipt has not been adequately supported, as will be now pointed out.

First, Petitioner has not provided a statement describing the system used for recording an Office communication received at the correspondence address of record with the USPTO. It follows that Petitioner has not established that the docketing system is sufficiently reliable.

Second, Petitioner provided a copy of the record used by the practitioner where the allegedly non-received Office communication would have been entered, in the form of the single-page "Applicant's Docket Record" that is associated with this particular application. However, Petitioner has not included a copy of the master docket or stated that no such master docket exists. As set forth in the portion of the MPEP that has been reproduced above, a master docket report is a report that shows all replies that the firm has docketed for a particular date in the future (typically the due date of the relevant Office communication, although some firms will docket items for the maximum extendable period for reply), *as opposed to a report that shows the relevant actions that have been docketed for a particular application.*

CONCLUSION

The time period for filing a renewed petition is governed by 37 C.F.R. § 1.181(f). Therefore, if reconsideration of this decision is desired, any response to this decision must be submitted within **TWO MONTHS** from the mail date of this decision, and **extensions of time under 37 C.F.R. § 1.136(a) are not permitted.** The reply should include a cover letter entitled "Renewed Petition pursuant to 37 C.F.R. § 1.181(a)". This is not a final agency action within the meaning of 5 U.S.C § 704.

The renewed petition should indicate in a prominent manner that the attorney handling this matter is Paul Shanoski, and may be submitted by mail,[3] hand-delivery,[4] or facsimile.[5] Registered users of EFS-Web may alternatively submit a response to this decision via EFS-Web.[6]

If responding by mail, Petitioner is advised not to place the undersigned's name on the envelope. Only the information that

3 Mail Stop Petition, Commissioner for Patents, United States Patent and Trademark Office, P.O. Box 1450, Alexandria, VA, 22313-1450.
4 Customer Window, Randolph Building, 401 Dulaney Street, Alexandria, VA, 22314.
5 (571) 273-8300: please note this is a central facsimile number.
6 https://sportal.uspto.gov/authenticate/authenticateuserlocalepf.html

appears in the footnote should be included - adding anything else to the address will delay the delivery of the response to the undersigned.

Telephone inquiries regarding *this decision* should be directed to the undersigned at (571) 272-3225.[7] All other inquiries concerning examination procedures should be directed to the Technology Center.

/Paul Shanoski/
Paul Shanoski
Senior Attorney
Office of Petitions

---

7 Petitioner will note that all practice before the Office should be in writing, and the action of the Office will be based exclusively on the written record in the Office. See 37 C.F.R. § 1.2. As such, Petitioner is reminded that no telephone discussion may be controlling or considered authority for any of Petitioner's further action(s).

UNITED STATES PATENT AND TRADEMARK OFFICE

Commissioner for Patents
United States Patent and Trademark Office
P.O. Box 1450
Alexandria, VA 22313-1450
www.uspto.gov

Paper No.

MAILED

JUL 28 2011

OFFICE OF PETITIONS

Montgomery Patent and Design, LLC
375 Southpointe Blvd., Suite 100-110
Canonsburg PA 15317

In re Application of	:	
Whatcott	:	
Application No. 11/787,754	:	DECISION ON RENEWED PETITION
Filed: April 17, 2007	:	PURSUANT TO
Attorney Docket No.: SCH-041307SAI-1	:	37 C.F.R. § 1.181(A)
Title: CONCRETE FORMING SCREED AIDS	:	

This is a decision on the renewed petition pursuant to 37 C.F.R. § 1.181(a), filed July 20, 2011, requesting that the holding of abandonment in the above-identified application be withdrawn.

This renewed petition pursuant to 37 C.F.R. § 1.181(a) is **DISMISSED.**

BACKGROUND

The above-identified application became abandoned for failure to file a proper response to the "notice requiring excess claim fees," (notice) mailed July 28, 2010, which set a shortened statutory period to reply of one month. No response was received, and no extensions of time under the provisions of 37 C.F.R. § 1.136(a) were obtained. Accordingly, the above-identified application became abandoned on August 29, 2010. A Notice of abandonment was mailed on April 4, 2011.

RELEVANT PORTION OF THE MPEP

Section 711.03(c)(I)(A) of the MPEP sets forth, *in pertinent part*:

> To minimize costs and burdens to practitioners and the Office, the Office has modified the showing required to establish nonreceipt of an Office action. The showing required to establish nonreceipt of an Office communication must include a statement from the

practitioner describing the system used for recording an Office action received at the correspondence address of record with the USPTO. The statement should establish that the docketing system is sufficiently reliable. It is expected that the record would include, but not be limited to, the application number, attorney docket number, the mail date of the Office action and the due date for the response.

PROCEDURAL HISTORY AND ANALYSIS

An original petition pursuant to 37 C.F.R. § 1.181(a) was filed on April 13, 2011, where Petitioner indicated that the notice of April 4, 2011 was not received at the correspondence address of record[1] and that a search of the file jacket and docket records indicates that the Office communication was not received,[2] and further provided a copy of the record used by the practitioner where the allegedly non-received Office communication would have been entered, in the form of the single-page "Applicant's Docket Record" that is associated with this particular application. Petitioner further provided an amendment and remarks.

The original petition pursuant to 37 C.F.R. § 1.181(a) was dismissed via the mailing of a decision on May 20, 2011.

With this renewed petition, Petitioner has indicated that no master docket exists. Petitioner's assertion of non-receipt has not been adequately supported, as will be now pointed out.

With this renewed petition, Petitioner has indicated that he utilizes an electronic docketing system entitled "GoldMine by FrontRange Solutions, a CRM software database." The renewed petition is silent as to how this system operates. As such, the statement which Petitioner has included describing the system used for recording an Office action received at the correspondence address of record with the USPTO is insufficient to either describe the docketing system or establish the reliability of the same. More specifically, **the petition is silent as to how information is entered into this docketing system, or how this docketing system serves to ensure that the correspondence recorded therein is responded to in a timely manner. Is all correspondence from the Office entered into this electronic database? Does this computer-based docketing software program generate reports that are distributed to the responsible attorneys? Does it generate periodic reminders prior to the due dates? If so, are these reminders distributed to the responsible attorneys?**

---

1 Original petition, page 1.
2 Id.

It follows that the record does not support a finding that the holding of abandonment should be withdrawn. The renewed petition pursuant to Rule 1.181 is dismissed accordingly.

CONCLUSION

The time period for filing a second renewed petition is governed by 37 C.F.R. § 1.181(f). Therefore, if reconsideration of this decision is desired, any response to this decision must be submitted within **TWO MONTHS** from the mail date of this decision, and **extensions of time under 37 C.F.R. § 1.136(a) are not permitted.** The reply should include a cover letter entitled "Second Renewed Petition pursuant to 37 C.F.R. § 1.181(a)". This is not a final agency action within the meaning of 5 U.S.C § 704.

The second renewed petition should indicate in a prominent manner that the attorney handling this matter is Paul Shanoski, and may be submitted by mail,[3] hand-delivery,[4] or facsimile.[5] Registered users of EFS-Web may alternatively submit a response to this decision via EFS-Web.[6]

If responding by mail, Petitioner is advised not to place the undersigned's name on the envelope. Only the information that appears in the footnote should be included - adding anything else to the address will delay the delivery of the response to the undersigned.

Telephone inquiries regarding *this decision* should be directed to the undersigned at (571) 272-3225.[7] All other inquiries concerning examination procedures should be directed to the Technology Center.

/Paul Shanoski/
Paul Shanoski
Senior Attorney
Office of Petitions

---

3 Mail Stop Petition, Commissioner for Patents, United States Patent and Trademark Office, P.O. Box 1450, Alexandria, VA, 22313-1450.
4 Customer Window, Randolph Building, 401 Dulaney Street, Alexandria, VA, 22314.
5 (571) 273-8300: please note this is a central facsimile number.
6 https://sportal.uspto.gov/authenticate/authenticateuserlocalepf.html
7 Petitioner will note that all practice before the Office should be in writing, and the action of the Office will be based exclusively on the written record in the Office. See 37 C.F.R. § 1.2. As such, Petitioner is reminded that no telephone discussion may be controlling or considered authority for any of Petitioner's further action(s).

UNITED STATES PATENT AND TRADEMARK OFFICE

Commissioner for Patents
United States Patent and Trademark Office
P.O. Box 1450
Alexandria, VA 22313-1450
www.uspto.gov

Paper No.

Montgomery Patent and Design, LLC
375 Southpointe Blvd., Suite 100-110
Canonsburg PA 15317

MAILED
SEP 30 2011
OFFICE OF PETITIONS

In re Application of	:	
Whatcott	:	
Application No. 11/787,754	:	DECISION ON SECOND
Filed: April 17, 2007	:	RENEWED PETITION
Attorney Docket No.: SCH-	:	PURSUANT TO
041307SAI-1	:	37 C.F.R. § 1.181(A)
Title: CONCRETE FORMING SCREED	:	
AIDS	:	

This is a decision on the second renewed petition pursuant to 37 C.F.R. § 1.181(a), filed September 28, 2011, requesting that the holding of abandonment in the above-identified application be withdrawn.

This second renewed petition pursuant to 37 C.F.R. § 1.181(a) is **GRANTED**.

The above-identified application became abandoned for failure to file a proper response to the "notice requiring excess claim fees," (notice) mailed July 28, 2010, which set a shortened statutory period to reply of one month. No response was received, and no extensions of time under the provisions of 37 C.F.R. § 1.136(a) were obtained. Accordingly, the above-identified application became abandoned on August 29, 2010. A Notice of abandonment was mailed on April 4, 2011.

An original petition pursuant to 37 C.F.R. § 1.181(a) was filed on April 13, 2011, where Petitioner indicated that the notice of April 4, 2011 was not received at the correspondence address of record[1] and that a search of the file jacket and docket records indicates that the Office communication was not received,[2] and further provided a copy of the record used by the practitioner

1 Original petition, page 1.
2 Id.

where the allegedly non-received Office communication would have been entered, in the form of the single-page "Applicant's Docket Record" that is associated with this particular application. Petitioner further provided an amendment and remarks.

The original petition pursuant to 37 C.F.R. § 1.181(a) was dismissed via the mailing of a decision on May 20, 2011.

A renewed petition pursuant to 37 C.F.R. § 1.181(a) was filed on July 20, 2011, where Petitioner indicated that no master docket exists and that he utilizes an electronic docketing system. The renewed petition was dismissed via the mailing of a decision on July 28, 2011.

With this second renewed petition, Petitioner has explained that the software database is used to generate a report every 15 days, and these reports are "disseminated to Practitioner of Record, who directs the response…"[3]

Considering the facts and circumstances of the delay at issue, as set forth on petition, it is concluded that Petitioner has met his burden of establishing that the notice was not received.

Accordingly, the petition pursuant to 37 C.F.R. § 1.181(a) is **GRANTED**. The holding of abandonment is **WITHDRAWN**.

The Technology Center will be notified of this decision, and jurisdiction over this application is transferred to the Technology Center, so that the amendment and remarks received on April 13, 2011 may receive further processing.

Petitioner may find it beneficial to view Private PAIR within a fortnight of the present decision to ensure that the withdrawal of the holding of abandonment has been acknowledged by the Technology Center in response to this decision. It is noted that all inquiries with regard to any failure of that change in status should be directed to the Technology Center where that change of status must be effected - **the Office of Petitions cannot effectuate a change of status**.

Telephone inquiries regarding this decision should be directed to the undersigned at (571) 272-3225.[4] All other inquiries

3 Second renewed petition, page 2.
4 Petitioner will note that all practice before the Office should be in writing, and the action of the Office will be based exclusively on the written record in the Office. See 37 C.F.R. § 1.2. As such, Petitioner is reminded that no telephone discussion may be controlling or considered authority for any of Petitioner's further action(s).

concerning examination procedures or status of the application should be directed to the Technology Center.

Paul Shanoski
Senior Attorney
Office of Petitions

UNITED STATES PATENT AND TRADEMARK OFFICE

UNITED STATES DEPARTMENT OF COMMERCE
United States Patent and Trademark Office
Address: COMMISSIONER FOR PATENTS
P.O. Box 1450
Alexandria, Virginia 22313-1450
www.uspto.gov

APPLICATION NO.	FILING DATE	FIRST NAMED INVENTOR	ATTORNEY DOCKET NO.	CONFIRMATION NO.
11/787,835	04/17/2007	Kathrin Berkner	74451P138C	4418

8791 7590 02/14/2012
BLAKELY SOKOLOFF TAYLOR & ZAFMAN LLP
1279 OAKMEAD PARKWAY
SUNNYVALE, CA 94085-4040

EXAMINER
HUNG, YUBIN

ART UNIT	PAPER NUMBER
2624	

MAIL DATE	DELIVERY MODE
02/14/2012	PAPER

Please find below and/or attached an Office communication concerning this application or proceeding.

The time period for reply, if any, is set in the attached communication.

UNITED STATES PATENT AND TRADEMARK OFFICE

Commissioner for Patents
United States Patent and Trademark Office
P.O. Box 1450
Alexandria, VA 22313-1450
www.uspto.gov

February 14, 2012

BLAKELY SOKOLOFF TAYLOR & ZAFMAN LLP
1279 OAKMEAD PARKWAY
SUNNYVALE CA 94085-4040

In re Application of :
BERKNER, KATHRIN. , Et **Al.** : **DECISION ON PETITION**
Application No: **11/787835** :
Filed: **04/17/2007**
Attorney Docket No: **74451P138C**

This is a decision on the Petition to Accept Color Drawings under 37 C.F.R 1.84 (a) (2), received in the United States Patent and Trademark Office (USPTO) September 19, 2007.

The petition is **DISMISSED.**

A grantable petition under 37 C.F.R. 1.84(a) (2) must be accompanied by the following.

1. The fee set forth under 37 C.F.R. 1.17(h),
2. Three (3) sets of the **color drawings** in question, (One (1) set for EFW filings, and
3. The specification containing the following language as the first paragraph in that portion of the specification relating to the brief description of the drawings

"The patent or application file contains at least one drawing executed in color. Copies of this patent or patent application publication with color drawing(s) will be provided by the Office upon request and payment of the necessary fee."

The petition did not meet the following requirement(s). **1** ☐ **2** ☑ **3**☐

A renewed petition filed under 37 C.F.R. 1.84 (a) (2) must be filed within TWO (2) MONTHS of this decision. If a renewed petition is not filed within the TWO (2) Months of this decision the drawings will be printed in black and white.

Telephone inquires relating to this decision may be directed to the undersigned in the Office of Data Management at 571- 576-1565.

/Bernadette Queen/
Quality Control Specialist
Office of Data Management
Publications Branch

UNITED STATES PATENT AND TRADEMARK OFFICE

UNITED STATES DEPARTMENT OF COMMERCE
United States Patent and Trademark Office
Address: COMMISSIONER FOR PATENTS
P.O. Box 1450
Alexandria, Virginia 22313-1450
www.uspto.gov

APPLICATION NO.	FILING DATE	FIRST NAMED INVENTOR	ATTORNEY DOCKET NO.	CONFIRMATION NO.
11/787,835	04/17/2007	Kathrin Berkner	74451P138C	4418

8791 7590 03/20/2012
BLAKELY SOKOLOFF TAYLOR & ZAFMAN LLP
1279 OAKMEAD PARKWAY
SUNNYVALE, CA 94085-4040

EXAMINER
HUNG, YUBIN

ART UNIT	PAPER NUMBER
2624	

MAIL DATE	DELIVERY MODE
03/20/2012	PAPER

Please find below and/or attached an Office communication concerning this application or proceeding.

The time period for reply, if any, is set in the attached communication.

UNITED STATES PATENT AND TRADEMARK OFFICE

Commissioner for Patents
United States Patent and Trademark Office
P.O. Box 1450
Alexandria, VA 22313-1450
www.uspto.gov

March 20, 2012

BLAKELY SOKOLOFF TAYLOR & ZAFMAN LLP
1279 OAKMEAD PARKWAY
SUNNYVALE CA 94085-4040

Re Application of
BERKNER, KATHRIN,ET Al
Application: **11/787835** : **DECISION ON PETITION**
Filed: **04/17/2007** : **ACCEPTANCE OF COLOR**
Attorney Docket No: **5020-1-009** : **DRAWINGS**

This is a decision on the Petition to Accept Color Drawings under 37 C.F.R 1.84 (a) (2), received in the United States Patent and Trademark Office (USPTO) March 5,2012.
The petition is **GRANTED**.
A grantable petition under 37 C.F.R. 1.84(a) (2) must be accompanied by the following.

1. The fee set forth under 37 C.F.R. 1.17(h),
2. Three (3) sets of the color drawings in question, or (1) set if filed via EFS, and
3. The specification containing the following language as the first paragraph in that portion of the specification relating to the brief description of the drawings.

   "The file of this patent contains at least one drawing executed in color. Copies of this patent with color drawing(s) will be provided by the Patent and Trademark Office upon request and payment of the necessary fee."

The petition was accompanied by all of the required fees and drawings. The specification contains the appropriate language. Therefore, the petition is GRANTED.

Telephone inquires relating to this decision may be directed to the undersigned in the Office of Data Management at 571-272-4200.

/Bernadette Queen/
Quality Control Specialist
Office of Data Management
Publications Branch

UNITED STATES PATENT AND TRADEMARK OFFICE

Commissioner for Patents
United States Patent and Trademark Office
P.O. Box 1450
Alexandria, VA 22313-1450
www.uspto.gov

KING & PARTNERS, PLC
170 COLLEGE AVENUE
SUITE 230
HOLLAND, MI 49423

MAILED
JUN 27 2011
OFFICE OF PETITIONS

In re Application of
Jacquelyn Kay Rozema, et al.
Application No. 11/787,841
Filed: April 18, 2007
Attorney Docket No. ROZ-061058

DECISION ON PETITION

This is a decision on the petition under the unintentional provisions of 37 CFR 1.137(b), filed May 25, 2011, to revive the above-identified application.

The application became abandoned for failure to reply in a timely manner to the non-final Office action mailed, March 1, 2010, which set a shortened statutory period for reply of three (3) months. No extensions of time under the provisions of 37 CFR 1.136(a) were obtained. Accordingly, the application became abandoned on June 2, 2010.

The petition satisfies the requirements of 37 CFR 1.137(b) in that petitioner has supplied (1) the reply in the form of an amendment, (2) the petition fee of $810, and (3) a proper statement of unintentional delay.

In view of the above, the petition is **GRANTED**.

Telephone inquiries concerning this decision should be directed to undersigned at (571) 272-1642. All other inquiries concerning the examination or status of this application should be directed to the Technology Center.

This application is being referred to Technology Center AU 3673 for appropriate action by the Examiner in the normal course of business on the reply received May 25, 2011.

April M. Wise
Petitions Examiner
Office of Petitions

UNITED STATES PATENT AND TRADEMARK OFFICE

Commissioner for Patents
United States Patent and Trademark Office
P.O. Box 1450
Alexandria, VA 22313-1450
www.uspto.gov

Date: 11/16/10

Patent No. : 7799945 B2
Ser. No. : 11/787,868
Inventor(s) : **Springer**
Issued : **September 21, 2010**
Title : **CATALYTIC PROCESS FOR PREPARING ALIPHATIC STRAIGHT-CHAIN AND BETA-ALKYL-BRANCHED CARBOXYLIC ACIDS**
Docket No. : **RUH-356**

Re: Request for Certificate of Correction

Consideration has been given your request for the issuance of a certificate of correction for the above-identified patent under the provisions of Rule(s) 1.322 and/or 1.323.

Assignees' names and addresses (assignment data) printed in a patent, are based *solely* on information supplied in the appropriate space for identifying the assignment data, i.e., item 3 of the Issue Fee Transmittal Form PTOL-85B. Granting of a request under 37 CFR 3.81(b) is required to correct applicant's error providing ***incorrect or erroneous*** assignment data, *before* issuance of a Certificate of Correction, under 37 CFR 1.323 *(see Manual of Patent Examining Procedures (M.P.E.P) Chp.1400, sect. 1481).* This procedure is required *at any time after the issue fee is paid*, including after issuance of the patent.

In view of the foregoing, your request, in this mater, is hereby denied.

A request to correct the Assignee under 37 CFR 3.81(b) should include:

A. **the processing fee set forth in 37 CFR 1.17(i) (currently $130);**
B. a statement that the failure to include the correct assignee name on the PTOL-85B was inadvertent; and
C. a copy of the Notice of Recordation of Assignment Document, reflecting the reel and frame number where the assignment(s) is recorded and/or reflecting proof of *the date* the assignment was submitted for recordation.

In the Request, Applicant(s) may request that the file be forwarded to Certificates of Correction Branch, for issuance of a Certificate of Correction, if the Request is granted.

Any request under 37 CFR 3.81(b) should be directed to the following address or facsimile number:

By mail: Mail Stop PETITIONS

Commissioner for Patents
Post Office Box 1450
Alexandria, VA 22313-1450

By hand: Customer Service Window
Mail Stop Petitions
Randolph Building
401 Dulany Street
Alexandria, VA 22314

By fax: (571) 273-0025
ATTN: Office of Petitions

If a fee (currently $100) was previously submitted for consideration of a Request for Certificate of Correction, under CFR 1.323, to correct assignment data, no additional fee is required.

Lamonte M. Newsome
For Mary Diggs, Supervisor
Decisions & Certificates
Of Correction Branch
(571) 272-3421 or (703) 305-8309

Charles Muserlain
317 Bliss Lane
Valley Cottage NY 10989

LMN

UNITED STATES PATENT AND TRADEMARK OFFICE

Commissioner for Patents
United States Patent and Trademark Office
P.O. Box 1450
Alexandria, VA 22313-1450
www.uspto.gov

Thompson E. Fehr
Suite 300
Goldenwest Corporate Center
5025 Adams Avenue
Ogden UT 84403

MAILED

FEB 27 2012

OFFICE OF PETITIONS

In re Application of :
Ralph S. Norman :
Application No. 11/787,922 :
Filed: April 17, 2007 :
Attorney Docket No. PNORMB :

DECISION ON PETITION

This is a decision on the petition under the unintentional provisions of 37 CFR 1.137(b), filed February 8, 2012, to revive the above-identified application.

The petition is **GRANTED**.

The application became abandoned for failure to reply in a timely manner to the non-final Office action mailed April 12, 2011, which set a shortened statutory period for reply of three (3) months. No extensions of time under the provisions of 37 CFR 1.136(a) were obtained. Accordingly, the application became abandoned on July 13, 2011. A Notice of Abandonment was mailed on November 8, 2011.

The petition satisfies the requirements of 37 CFR 1.137(b) in that petitioner has supplied (1) the reply in the form of an amendment, (2) the petition fee of $930, (3) a proper statement of unintentional delay. Accordingly, the amendment is accepted as being unintentionally delayed.

Telephone inquiries concerning this decision should be directed to Kimberly Inabinet at (571) 272-4618.

This application is being referred to Technology Center AU 3611 for appropriate action by the Examiner in the normal course of business on the reply received February 8, 2012.

/Kimberly Inabinet/

Kimberly Inabinet
Petitions Examiner
Office of Petitions

UNITED STATES PATENT AND TRADEMARK OFFICE

Commissioner for Patents
United States Patent and Trademark Office
P.O. Box 1450
Alexandria, VA 22313-1450
www.uspto.gov

THE NATH LAW GROUP
112 SOUTH WEST STREET
ALEXANDRIA, VA 22314

MAILED

AUG 09 2010

OFFICE OF PETITIONS

In re Application of	:	
Schwartz et al.	:	DECISION ON PETITION
Application No. 11/787,932	:	TO WITHDRAW
Filed: April 18, 2007	:	FROM RECORD
Attorney Docket No. WSOL-1049576	:	

This is a decision on the Request to Withdraw as attorney or agent of record under 37 C.F.R. § 1.36(b), filed on July 19, 2010.

The request is **DISMISSED**.

The petition is unsigned; it appears that the petition submitted herein was intended to be signed by Laurie A. Axford, an attorney registered to practice before the U.S. Patent and Trademark Office. A review of the file record indicates that Customer Number 20529, The Nath Law Group was never appointed power of attorney in this patent application. Therefore, the request to withdraw under 37 C.F.R. § 1.36(b) is not applicable.

Petitioner should note that the Office no longer accepts address changes to a new practitioner or law firm filed with requests under 37 C.F.R. § 1.36(b). The Office will only accept correspondence address changes to the most current address information provided for the assignee of the entire interest *who properly became of record under 37 CFR 3.71,* or, if no assignee of the entire interest has properly been made of record, the most current address information provided for the first named inventor. 37 CFR 3.71(c) states:

> *An assignee becomes of record either in a national patent application or a reexamination proceeding by filing a statement in compliance with § 3.73(b) that is signed by a party who is authorized to act on behalf of the assignee.*

All future communications from the Office will be directed to current address of record until otherwise properly notified by the applicant or a proper change of correspondence address have been submitted.

Telephone inquires concerning this decision should be directed to the undersigned at (571) 272-6059. All other inquires concerning either the examination or status of the application should be directed to the Technology Center.

A. Kelley

Alicia Kelley
Petitions Examiner
Office of Petitions

cc: GORDON & REES LLP
101 WEST BROADWAY
SUITE 1600
SAN DIEGO CA 92101

UNITED STATES PATENT AND TRADEMARK OFFICE

UNITED STATES DEPARTMENT OF COMMERCE
United States Patent and Trademark Office
Address: COMMISSIONER FOR PATENTS
P.O. Box 1450
Alexandria, Virginia 22313-1450
www.uspto.gov

APPLICATION NO.	FILING DATE	FIRST NAMED INVENTOR	ATTORNEY DOCKET NO.	CONFIRMATION NO.
11/787,970	04/17/2007	Jonathan Yen	T034-P10618US	3613

7590 05/31/2011
SoCAL IP LAW GROUP LLP
310 N. WESTLAKE BLVD. STE 120
WESTLAKE VILLAGE, CA 91362

EXAMINER
ALAVI, AMIR

ART UNIT	PAPER NUMBER
2624	

NOTIFICATION DATE	DELIVERY MODE
05/31/2011	ELECTRONIC

ACKNOWLEDGEMENT OF REQUEST

Notice of Allowance/Allowability Mailed

The request to print a color drawing reference as the first paragraph in the portion of the specification containing a brief description of the drawings as required by 37 CFR 1.84 and MPEP § 608.02 has been received by the United States Patent and Trademark Office and will be entered into the specification.

571-272-4200 or 1-888-786-0101
Application Assistance Unit
Office of Data Management

FORM PTOM327-5 (Rev. 02/08)

UNITED STATES PATENT AND TRADEMARK OFFICE

Commissioner for Patents
United States Patent and Trademark Office
P.O. Box 1450
Alexandria, VA 22313-1450
www.uspto.gov

May 26, 2011

SoCAL IP LAW GROUP LLP
310 N. WESTLAKE BLVD. STE 120
WESTLAKE VILLAGE CA 91362

In re Application of	:	
Yen, Jonathan	:	**DECISION ON PETITION**
Application No. 11/787.970	:	
Filed: 04/17/2007	:	***ACCEPTANCE OF COLOR***
Attorney Docket No. TO34-P10618US	:	***DRAWINGS***

This is a decision on the Petition to Accept Color Drawings under 37 C.F.R 1.84 (a) (2), received in the United States Patent and Trademark Office (USPTO) April 17, 2007.

The petition is **GRANTED**.

A grantable petition under 37 C.F.R. 1.84(a) (2) must be accompanied by the following.

1. The fee set forth under 37 C.F.R. 1.17(h),
2. Three (3) sets of the color drawings in question, or (1) set if filed via EFS, and
3. The specification contains appropriate language referring to the color drawings as the first paragraph in that portion of the specification relating to the brief description of the drawings.

The petition was accompanied by all of the required fees and drawings. The specification contains the appropriate language. Therefore, the petition is GRANTED.

Telephone inquires relating to this decision may be directed to the undersigned in the Office of Data Management at 571-272-4200.

/Diane Terry/
Quality Control Specialist
Office of Data Management
Publications Branch

UNITED STATES PATENT AND TRADEMARK OFFICE

Commissioner for Patents
United States Patent and Trademark Office
P.O. Box 1450
Alexandria, VA 22313-1450
www.uspto.gov

WIGGIN AND DANA LLP
ATTENTION: PATENT DOCKETING
ONE CENTURY TOWER, P.O. BOX 1832
NEW HAVEN CT 06508-1832

MAILED
JUL 28 2011
OFFICE OF PETITIONS

In re Patent No. 7,623,241
Issued: November 24, 2009
Application No. 11/787,990
Filed: April 17, 2007
Attorney Docket Number: 102878-200

ON PETITION

This is a decision on the petition, filed January 20, 2010, under 37 CFR 3.81(b)[1] to correct the assignee information on the front of the Patent.

The petition is **GRANTED**.

Petitioner states that the correct assignee information is ARCH SAYERLACK COATINGS S.r.l and that the PTOL-85(b) inadvertently listed the assignee information incorrectly. Accordingly, petitioner requests that a certificate of correction be issued to reflect the correct assignee information on the front page of the Letters Patent.

37 CFR 3.81(b), effective June 25, 2004, reads:

> *After payment of the issue fee:* Any request for issuance of an application in the name of the assignee submitted after the date of payment of the issue fee, and any request for a patent to be corrected to state the name of the assignee, must state that the assignment was submitted for recordation as set forth in § 3.11 before issuance of the patent, and must include a request for a certificate of correction under § 1.323 of this chapter (accompanied by the fee set forth in § 1.20(a) and the processing fee set forth in § 1.17(i) of this chapter.

The request was accompanied by a certificate of correction (and fee) as required by 3.81(b). Further, Office assignment records reflect that ARCH SAYERLACK COATINGS S.r.l is the assignee of record and that it should have been listed as ARCH SAYERLACK COATINGS S.r.l. Accordingly, as the request complies with the

---

[1] *See* Official Gazette of June 22, 2004

provisions of 37 CFR 3.81(b), it would be appropriate for a certificate of correction to issue.

Inquiries concerning this decision should be directed to the undersigned at (571) 272-3212. Any questions concerning the issuance of a certificate of correction should be directed to the Certificates of Correction Branch at (703) 305-8309.

This matter is being referred to the Certificates of Correction Branch for issuance of a certificate of correction.

Patricia Faison-Ball

Patricia Faison-Ball
Senior Petitions Attorney
Office of Petitions

UNITED STATES PATENT AND TRADEMARK OFFICE

Commissioner for Patents
United States Patent and Trademark Office
P.O. Box 1450
Alexandria, VA 22313-1450
www.uspto.gov

R. Ruschena Patent Agent, LLC
8400 E. Crescent Parkway, Suite 600
Greenwood Village CO 80111

MAILED
SEP 24 2010
OFFICE OF PETITIONS

In re Application of
OFFER, DANILO
Application No. 11/788,012
Filed: 04/18/2007
Title: PARKING DEVICE FOR MOTOR VEHICLES

DECISION ON PETITION

This is a decision on the petition under 37 CFR 1.137(b), filed April 24, 2010, to revive the above-identified application.

The petition is GRANTED.

The application became abandoned for failure to reply in a timely manner to the Restriction Requirement mailed September 29, 2009, which set a shortened statutory period for reply of one (1) month or thirty (30) days (whichever is later). No extensions of time under the provisions of 37 CFR 1.136(a) were obtained. Accordingly, the application became abandoned on October 30, 2009. A Notice of Abandonment was mailed on April 6, 2010.

The petition satisfies the requirements of 37 CFR 1.137(b) in that petitioner has supplied (1) the reply in the form of an election; (2) the petition fee; and (3) a proper statement of unintentional delay.

This matter is being forwarded to Technology Center Art Unit 3611.

Telephone inquiries concerning this matter may be directed to the undersigned at (571) 272-3211.

C. T. Donnell

Christina Tartera Donnell
Senior Petitions Attorney
Office of Petitions

UNITED STATES PATENT AND TRADEMARK OFFICE

Commissioner for Patents
United States Patent and Trademark Office
P.O. Box 1450
Alexandria, VA 22313-1450
www.uspto.gov

EMD SERONO RESEARCH INSTITUTE
ONE TECHNOLOGY PLACE
ROCKLAND MA 02370

MAILED
NOV 08 2011
OFFICE OF PETITIONS

In re Application of	:	
GOUTOPOULOS, et al	:	
Application No. 11/788,032	:	DECISION ON PETITION
Filed: April 18, 2007	:	
Attorney Docket No. 1135/US NP	:	

This is a decision on the petition under the unintentional provisions of 37 CFR 1.137(b), filed October 11, 2011, to revive the above-identified application.

The petition is **GRANTED**.

The application became abandoned for failure to timely pay the issue and publication fees on or before October 6, 2011, as required by the Notice of Allowance and Fee(s) Due, mailed July 6, 2011, which set a statutory period for reply of three (3) months. Accordingly, the application became abandoned on October 7, 2011.

The petition satisfies the requirements of 37 CFR 1.137(b) in that petitioner has supplied (1) the reply in the form of payment of the issue fee of $1740 and the publication fee of $300; (2) the petition fee of $1860; and (3) the required statement of unintentional delay.

Telephone inquiries concerning this decision should be directed to the undersigned at (571) 272-6735.

The application is being referred to the Office of Data Management for processing into a patent.

/Diane C. Goodwyn/
Diane C. Goodwyn
Petitions Examiner
Office of Petitions

UNITED STATES PATENT AND TRADEMARK OFFICE

Commissioner for Patents
United States Patent and Trademark Office
P.O. Box 1450
Alexandria, VA 22313-1450
www.uspto.gov

LOS ALAMOS NATIONAL SECURITY, LLC
LOS ALAMOS NATIONAL LABORATORY
PPO. BOX 1663, LC/IP, MS A187
LOS ALAMOS NM 87545

MAILED
JAN 24 2011
OFFICE OF PETITIONS

In re Application of :
Swanson et al. :
Application No. 11/788,183 : DECISION ON PETITION
Filed: April 18, 2007 :
Attorney Docket No. S-109,003 :

This is a decision on the petition under the unintentional provisions of 37 CFR 1.137(b), filed November 22, 2010, to revive the above-identified application.

The petition is **GRANTED**.

This above-identified application became abandoned for failure to timely file a reply to a non-final Office action mailed September 16, 2009. The Office Action set a three (3) month shortened statutory period for reply. No extensions of time were obtained under the provisions of 37 CFR 1.136(a). Accordingly, this application became abandoned on December 17, 2009. A Notice of Abandonment was mailed March 31, 2010.

The petition satisfies the requirements of 37 CFR 1.137(b) in that petitioner has supplied (1) the reply in the form of an amendment (2) the petition fee of $1620.00, and (3) a statement of unintentional delay.

An extension of time under 37 CFR 1.136 must be filed prior to the expiration of the maximum extendable period for reply. *See* In re Application of S., 8 USPQ2d 1630, 1631 (Comm'r Pats. 1988). Since the $1110 extension of time fee submitted with the petition on November 22. 2010 was subsequent to the maximum extendable period for reply, this fee is unnecessary and will be credited to petitioner's deposit account 12-2150.

Telephone inquiries concerning this decision should be directed to the undersigned at (571) 272-3215.

This application is being referred to Technology Center AU 1641 for appropriate action by the Examiner in the normal course of business on the reply received

Charlema Grant
Petitions Attorney
Office of Petitions

UNITED STATES PATENT AND TRADEMARK OFFICE

Commissioner for Patents
United States Patent and Trademark Office
P.O. Box 1450
Alexandria, VA 22313-1450
www.uspto.gov

Scott A. Whitaker, Ph.D., J.D.
Senior Intellecual Property Counsel
BioNumerik Pharmaceuticals, Inc.
8122 Datapoint Drive, Suite 1250
San Antonio TX 78229

MAILED

JAN 24 2011

OFFICE OF PETITIONS

In re Patent No. 7,687,487	:	
Issue Date: March 30, 2010	:	
Application No. 11/788,223	:	NOTICE
Filed: April 19, 2007	:	
Attorney Docket No. X-0254	:	

This is a notice regarding your request for acceptance of a fee deficiency submission under 37 CFR 1.28 filed December 1, 2010. On September 1, 1998, the Court of Appeals for the Federal Circuit held that 37 CFR 1.28(c) is the sole provision governing the time for correction of the erroneous payment of the issue fee as a small entity. **See DH Technology v. Synergystex International, Inc. 154 F.3d 1333, 47 USPQ2d 1865 (Fed. Cir. Sept. 1, 1998).**

The Office no longer investigates or rejects original or reissue applications under 37 CFR 1.56. **1098 Off. Gaz. Pat. Office 502 (January 3, 1989)**. Therefore, nothing in this Notice is intended to imply that an investigation was done.

Your fee deficiency submission under 37 CFR 1.28 is hereby accepted. The petition is **GRANTED**.

This application is no longer entitled to small entity status. Accordingly, all future fees paid in this application must be paid at the large entity rate.

This file is being forwarded to Files Repository.

Telephone inquiries related to this decision should be directed to the Kimberly Inabinet at (571) 272-4618.

/Carl Friedman/
Carl Friedman
Petitions Examiner
Office of Petitions

SPE RESPONSE FOR CERTIFICATE OF CORRECTION

DATE : 08/23/11

TO SPE OF : ART UNIT 3765

SUBJECT : Request for Certificate of Correction for Appl. No.: 11788230 Patent No.: 7975318

CofC mailroom date: 08/15/11

Please respond to this request for a certificate of correction within 7 days.

FOR IFW FILES:

Please review the requested changes/corrections as shown in the **COCIN** document(s) in the IFW application image. No new matter should be introduced, nor should the scope or meaning of the claims be changed.

Please complete the response (see below) and forward the completed response to scanning using document code **COCX**.

FOR PAPER FILES:

Please review the requested changes/corrections as shown in the attached certificate of correction. Please complete this form (see below) and forward it with the file to:

Certificates of Correction Branch (CofC)
Randolph Square – 9D10-A
Palm Location 7580
You can fax the Directors/SPE response to 571-273-3421

Note: _

Lamonte Newsome

Certificates of Correction Branch

571-272-3421

Thank You For Your Assistance

The request for issuing the above-identified correction(s) is hereby:
Note your decision on the appropriate box.

☒ **Approved**	**All** changes apply.
☐ **Approved in Part**	Specify below which changes **do not** apply.
☐ **Denied**	State the reasons for denial below.

SPE RESPONSE FOR CERTIFICATE OF CORRECTION

Comments: _____

_____

_____

_____

_____

3765

GARY L. WELCH
SUPERVISORY PATENT EXAMINER
TECHNOLOGY CENTER 3700

SPE

Art Unit

UNITED STATES PATENT AND TRADEMARK OFFICE

Commissioner for Patents
United States Patent and Trademark Office
P.O. Box 1450
Alexandria, VA 22313-1450
www.uspto.gov

KLAUS J. BACH
4407 TWIN OAKS DRIVE
MURRYSVILLE PA 15668

MAILED

DEC 14 2011

OFFICE OF PETITIONS

In re Application of	:	
Berhard Walke et al	:	
Application No. 11/788,246	:	DECISION ON PETITION
Filed: April 19, 2007	:	
Attorney Docket No. ME 105	:	

This is a decision on the petition under the unintentional provisions of 37 CFR 1.137(b), filed September 23, 2011, to revive the above-identified application.

The petition is **GRANTED**.

The application became abandoned for failure to file a timely and proper reply to the final Office action mailed September 27, 2010. A Notice of Abandonment was mailed on September 16, 2011.

The petition satisfies the conditions for revival pursuant to the provisions of 37 CFR 1.137(b) in that (1) the reply in the form of an amendment; (2) the petition fee; and (3) the required statement of unintentional delay have been received. Accordingly, the reply to the final Office action mailed September 27, 2010, is accepted as having been unintentionally delayed.

Telephone inquiries concerning this decision should be directed to the undersigned at (571) 272-3208.

This application is being referred to Technology Center AU 2617 for appropriate action by the Examiner in the normal course of business on the reply received.

/KOC/
Karen Creasy
Petitions Examiner
Office of Petitions

UNITED STATES PATENT AND TRADEMARK OFFICE

Commissioner for Patents
United States Patent and Trademark Office
P.O. Box 1450
Alexandria, VA 22313-1450
www.uspto.gov

Paper No.

FOLEY & LARDNER LLP
150 EAST GILMAN STREET
P.O. BOX 1497
MADISON WI 53701-1497

MAILED
FEB 22 2011
OFFICE OF PETITIONS

In re Application of :
Olsen et al. :
Application No. 11/788,279 :
Filed: April 19, 2007 :
Atty Docket No. 088245-6123 :
Title: SIMULTANEOUS MULTIPLE :
FIELD OF VIEW DIGITAL CAMERAS :

DECISION
ON APPLICATION FOR
PATENT TERM ADJUSTMENT

This is in response to the "REQUEST FOR RECONSIDERATION OF PATENT TERM ADJUSTMENT FOR PATENT APPLICATION UNDER 37 C.F.R. §1.705(b)," filed January 19, 2011. Applicant submits that the correct patent term adjustment to be indicated on the patent is nine hundred and nine (909) days, not five hundred and twenty-three (523) days as calculated by the Office as of the mailing of the initial determination of patent term adjustment. Applicant requests this correction solely on the basis that the Office will take in excess of three years to issue this patent.

As the instant application for patent term adjustment requests reconsideration of the patent term adjustment as it relates to the Office's failure to issue the patent within 3 years of the filing date, the application for patent term adjustment under 37 CFR 1.705(b) is **DISMISSED as PREMATURE**.

Knowledge of the actual date the patent issues is required to calculate the amount, if any, of additional patent term patentee is entitled to for Office failure to issue the patent within 3 years. See § 1.702(b). (This is true even where a request for continued examination (RCE) was filed). The computer will not undertake the § 1.702(b) calculation until the actual date of issuance of the patent has been determined. Likewise, the computer will not calculate any further Office delay under § 1.702(a)(4) or applicant delay under § 1.704(c)(10) until the actual date of issuance of the patent has been determined. As

such, the Office cannot make a determination on the correctness of the patent term adjustment until the patent has issued.

Requesting reconsideration of the patent term adjustment to be indicated on the patent under 37 CFR 1.705(b) based on the initial determination of patent term adjustment and a projected issuance date of the patent (or even the filing date of the request for continued examination) is premature. Accordingly, it is appropriate to dismiss as premature such a request.

Rather than file an application for patent term adjustment under 37 CFR 1.705(b) contesting the 37 CFR 1.702(b) calculation at the time of the mailing of the notice of allowance, Applicant is advised that he may wait until the time of the issuance of the patent and file a request for reconsideration of the patent term adjustment pursuant to 37 CFR 1.705(d). As the USPTO does not calculate the amount of time earned pursuant to 37 CFR 1.702(b) until the time of the issuance of the patent, the Office will consider any request for reconsideration of the patent term adjustment due to an error in the calculation of 37 CFR 1.702(b) to be timely if the request for reconsideration is filed within two months of the issuance of the patent. However, as to all other bases for contesting the initial determination of patent term adjustment received with the notice of allowance, Applicant must timely file an application for patent term adjustment prior to the payment of the issue fee.[1]

The Office acknowledges submission of the $200.00 fee set forth in 37 CFR 1.18(e). No additional fees are required.

Any request for reconsideration of the patent term adjustment indicated on the patent must be timely filed within 2 months after issuance pursuant to 37 CFR 1.705(d) and must include payment of the required fee under 37 CFR 1.18(e).

---

[1] For example, if Applicant disputes both the calculation of patent term adjustment under 37 CFR 1.702(a)(1) for Office failure to mail a first Office action or notice of allowance not later than fourteen months after the date on which the application was filed and under 37 CFR 1.702(b) for Office failure to issue a patent within three years of the actual filing date of the application, then Applicant must still timely file an application for patent term adjustment prior to the payment of the issue fee to contest the calculation of Office delay in issuing a first Office action or notice of allowance. See 37 CFR 1.705(b) and 35 U.S.C. 154(b)(3)(B). A dispute as to the calculation of the § 1.702(a)(1) period raised on request for reconsideration of patent term adjustment under 37 CFR 1.705(d) will be dismissed as untimely filed.

The Office of Data Management has been advised of this decision. This application is being referred to the Office of Data Management for issuance of the patent.

Telephone inquiries regarding this decision should be directed to the undersigned at (571) 272-3225.

/Paul Shanoski/
Paul Shanoski
Senior Attorney
Office of Petitions

SPE RESPONSE FOR CERTIFICATE OF CORRECTION

DATE : 6/23/11

TO SPE OF : ART UNIT 2622

SUBJECT : Request for Certificate of Correction for Appl. No.: 11788279 Patent No.: 7916180

CofC mailroom date:
06/17/11

Please respond to this request for a certificate of correction within 7 days.

FOR IFW FILES:

Please review the requested changes/corrections as shown in the **COCIN** document(s) in the IFW application image. No new matter should be introduced, nor should the scope or meaning of the claims be changed.

Please complete the response (see below) and forward the completed response to scanning using document code **COCX**.

FOR PAPER FILES:

Please review the requested changes/corrections as shown in the attached certificate of correction. Please complete this form (see below) and forward it with the file to:

Certificates of Correction Branch (CofC)
Randolph Square – 9D10-A
Palm Location 7580

Note: should the changes be made on the title page?

RoChaun Hardwick
Certificates of Correction Branch
571 272-0470

Thank You For Your Assistance

The request for issuing the above-identified correction(s) is hereby:
Note your decision on the appropriate box.

- ■ **Approved** — **All** changes apply.
- ❑ **Approved in Part** — Specify below which changes **do not** apply.
- ❑ **Denied** — State the reasons for denial below.

Comments: Changes are Approved

/Jason Chan/, SPE, Art Unit 2622

UNITED STATES PATENT AND TRADEMARK OFFICE

Commissioner for Patents
United States Patent and Trademark Office
P.O. Box 1450
Alexandria, VA 22313-1450
www.uspto.gov

HERCULES INCORPORATED
HERCULES PLAZA
1313 N. MARKET STREET
WILMINGTON DE 19894-0001

MAILED

AUG 2 0 2010

OFFICE OF PETITIONS

In re Application of	:	
Bakeev et al.	:	
Application No. 11/788,344	:	DECISION ON PETITION
Filed: April 19, 2007	:	
Attorney Docket No. DKT 10506	:	

This is a decision on the petition under the unintentional provisions of 37 CFR 1.137(b), filed July 3, 2010, to revive the above-identified application.

The petition is **GRANTED**.

The application became abandoned for failure to reply in a timely manner to the non-final Office action mailed August 7, 2009, which set a shortened statutory period for reply of three (3) months. No extensions of time under the provisions of 37 CFR 1.136(a) were obtained. Accordingly, the application became abandoned on November 8, 2009. A Notice of Abandonment was mailed February 18, 2010.

The petition satisfies the requirements of 37 CFR 1.137(b) in that petitioner has supplied (1) the reply in the form of an Amendment, (2) the petition fee of $1,620.00, and (3) an adequate statement of unintentional delay.

Telephone inquiries concerning this decision should be directed to the undersigned at (571) 272-7751.

This application is being referred to Technology Center AU 1796 for appropriate action by the Examiner in the normal course of business on the reply received.

Joan Olszewski

Joan Olszewski
Petitions Examiner
Office of Petitions

UNITED STATES PATENT AND TRADEMARK OFFICE

Commissioner for Patents
United States Patent and Trademark Office
P.O. Box 1450
Alexandria, VA 22313-1450
www.uspto.gov

MAILED
MAY 03 2011
OFFICE OF PETITIONS

HEWLETT-PACKARD COMPANY
INTELLECTUAL PROPERTY ADMINSTRATION
3404 E. HARMONY ROAD
MAIL STOP 35
FORT COLLINS CO 80528

In re Application of	:	
SNIDER, et al	:	
Application No. 11/788,447	:	DECISION ON PETITION
Filed: April 19, 2007	:	
Attorney Docket No. 200601315-1	:	

This is a decision on the petition under the unintentional provisions of 37 CFR 1.137(b), filed March 4, 2011, to revive the above-identified application.

The petition is **GRANTED**.

The application became abandoned for failure to timely pay the issue and publication fees on or before November 16, 2010, as required by the Notice of Allowance and Fee(s) Due, mailed August 16, 2010, which set a statutory period for reply of three (3) months. Accordingly, the application became abandoned on November 17, 2010.

The petition satisfies the requirements of 37 CFR 1.137(b) in that petitioner has supplied (1) the reply in the form of payment of the issue fee of $1510 and the publication fee of $300; (2) the petition fee of $1620; and (3) the required statement of unintentional delay.

The petition fee of $1620 under the of provisions of 37 CFR 1.17(m) will be charged as authorized. The additional issue and publication fees charged with the petition dated March 4, 2011, will be refunded to Deposit Account No. 08-2025, within the normal course of business.

Telephone inquiries concerning this decision should be directed to the undersigned at (571) 272-6735.

The application is being referred to the Office of Data Management for processing into a patent.

/Diane C. Goodwyn/
Diane C. Goodwyn
Petitions Examiner
Office of Petitions

UNITED STATES PATENT AND TRADEMARK OFFICE

Commissioner for Patents
United States Patent and Trademark Office
P.O. Box 1450
Alexandria, VA 22313-1450
www.uspto.gov

MICROSOFT CORPORATION
ONE MICROSOFT WAY
REDMOND WA 98052

MAILED
JUL 14 2011
OFFICE OF PETITIONS

In re Application of	:	
Jiang et al.	:	
Application No. 11/788,448	:	DECISION ON PETITION
Filed: April 20, 2007	:	
Attorney Docket No. 319061.02	:	

This is a decision on the petition under the unintentional provisions of 37 CFR 1.137(b), filed June 21, 2011, to revive the above-identified application.

The petition is **GRANTED**.

This application became abandoned for failure to timely submit Corrected Drawings on or before May 31, 2011, as required by the Notice of Allowance and Fee(s) Due and the Notice of Allowability, mailed February 28, 2011. Accordingly, the date of abandonment of this application is June 1, 2011. A Notice of Abandonment was mailed June 15, 2011.

The petition satisfies the requirements of 37 CFR 1.137(b) in that petitioner has supplied (1) Corrected Drawings, (2) the petition fee of $1,620.00; and (3) a proper statement of unintentional delay.

Additionally, the address given on the petition differs from the address of record. A courtesy copy of this decision is being mailed to the address given on the petition; however, the Office will mail all future correspondence solely to the address of record.

Telephone inquiries concerning this decision should be directed to the undersigned at (571) 272-7751.

This application is being referred to Publishing Division for processing into a patent and review of the Corrected Drawings submitted with the instant petition.

/Joan Olszewski/
Joan Olszewski
Petitions Examiner
Office of Petitions

cc: Christopher I. Holt
900 Second Av. S. #1400
Minneapolis, MN 55402

UNITED STATES PATENT AND TRADEMARK OFFICE

Commissioner for Patents
United States Patent and Trademark Office
P.O. Box 1450
Alexandria, VA 22313-1450
www.uspto.gov

HOWREY LLP-HN
C/O IP DOCKETING DEPARTMENT
2941 FAIRVIEW PARK DRIVE, SUITE 200
FALLS CHURCH VA 22042-7195

MAILED

AUG 25 2010

OFFICE OF PETITIONS

In re Application of	:	DECISION ON PETITION
Scates et al.	:	TO WITHDRAW
Application No. 11/788,455	:	FROM RECORD
Filed: April 20, 2007	:	
Attorney Docket No. 10437.0073.CNUS04	:	

This is a decision on the Request to Withdraw as attorney or agent of record under 37 C.F.R. § 1.36(b) filed July 19, 2010, which is being treated as a request to withdraw from employment in a proceeding before the Office under 37 C.F.R. § 10.40.

The request is **DISMISSED**.

A review of the file record indicates that Howrey LLP-HN does not have power of attorney in this patent application. Accordingly, the request to withdraw under 37 C.F.R. § 1.36(b) is not applicable.

The request to change the correspondence address of record is not accepted in view of Howrey LLP-HN not having power of attorney. See MPEP §§ 601.03 and 405.

All future communications from the Office will continue to be directed to the above-listed address until otherwise notified by applicant.

Currently, there is an outstanding Office action mailed July 15, 2010 that requires a reply.

Telephone inquires concerning this decision should be directed to the undersigned at 571-272-7751.

Joan Olszewski

Joan Olszewski
Petitions Examiner
Office of Petitions

UNITED STATES PATENT AND TRADEMARK OFFICE

Commissioner for Patents
United States Patent and Trademark Office
P.O. Box 1450
Alexandria, VA 22313-1450
www.uspto.gov

MORRISON & FOERSTER LLP
755 PAGE MILL RD
PALO ALTO, CA 94304-1018

MAILED

DEC 07 2010

OFFICE OF PETITIONS

In re Application of
D. Bruce Modesitt
Application No. 11/788,509
Filed: April 19, 2007
Attorney Docket No. 602572000302

DECISION ON PETITION
TO WITHDRAW
FROM RECORD

This is a decision on the Request to Withdraw as attorney or agent of record under 37 C.F.R. § 1.36(b), filed October 14, 2010.

The request is **APPROVED**.

A grantable request to withdraw as attorney/agent of record must be signed by every attorney/agent seeking to withdraw or contain a clear indication that one attorney is signing on behalf of another/others.

The request was signed by Mika Mayer on behalf of all attorneys of record who are associated with customer No. 25226. All attorneys/agents associated with the Customer Number 25226 have been withdrawn. Applicant is reminded that there is no attorney of record at this time.

The correspondence address of record has been changed and the new correspondence address is the address indicated below.

There is an outstanding Office action mailed June 24, 2010 that requires a reply from the applicant.

Telephone inquiries concerning this decision should be directed to undersigned at 571-272-1642. All other inquiries concerning the examination or status of this application should be directed to the Technology Center.

/AMW/
April M. Wise
Petitions Examiner
Office of Petitions

cc: ARSTASIS, INC.
1021 HOWARD AVENUE
SUITE C
SAN CARLOS, CA 94070

UNITED STATES PATENT AND TRADEMARK OFFICE

UNITED STATES DEPARTMENT OF COMMERCE
United States Patent and Trademark Office
Address: COMMISSIONER FOR PATENTS
P.O. Box 1450
Alexandria, Virginia 22313-1450
www.uspto.gov

APPLICATION NUMBER	FILING OR 371(C) DATE	FIRST NAMED APPLICANT	ATTY. DOCKET NO./TITLE
11/788,509	04/19/2007	D. Bruce Modesitt	602572000302

CONFIRMATION NO. 5812

POWER OF ATTORNEY NOTICE

25226
MORRISON & FOERSTER LLP
755 PAGE MILL RD
PALO ALTO, CA 94304-1018

OC000000044830836

Date Mailed: 12/07/2010

NOTICE REGARDING CHANGE OF POWER OF ATTORNEY

This is in response to the Power of Attorney filed 10/14/2010.

- The withdrawal as attorney in this application has been accepted. Future correspondence will be mailed to the new address of record. 37 CFR 1.33.

/amwise/

Office of Data Management, Application Assistance Unit (571) 272-4000, or (571) 272-4200, or 1-888-786-0101

UNITED STATES PATENT AND TRADEMARK OFFICE

Commissioner for Patents
United States Patent and Trademark Office
P.O. Box 1450
Alexandria, VA 22313-1450
www.uspto.gov

NED M. AHDOOT
6916 Kings Harbor Dr.
RANCHO P.V. CA 90275

MAILED
MAY 26 2011
OFFICE OF PETITIONS

In re Application of :
Ned M. AHDOOT :
Application No. 11/788,528 :
Filed: April 19, 2007 :
Attorney Docket No. AHDOOT-N-05US :

ON PETITION

This is a decision on the petition under 37 CFR 1.137(b), filed March 30, 2011, to revive the above-identified application.

The petition is **GRANTED**.

This application became abandoned for failure to timely submit corrected formal drawings on or before January 19, 2011, as required by the Notice of Allowance and Fee(s) Due and the Notice of Allowability, mailed October 19, 2010. Accordingly, the date of abandonment of this application is January 20, 2011.

The petition satisfies the requirements of 37 CFR 1.137(b) in that petitioner has supplied (1) the reply in the form of corrected formal drawings , (2) the petition fee of $810; and (3) a proper statement of unintentional delay.

The petition requires a fee of $810. Petitioner submitted an issue fee of $755, and a publication fee of $300, totaling $1055. The $1055 will be applied towards the $810 petition fee, and the remaining $245 will be refunded via Treasury Check.

Telephone inquiries concerning this decision should be directed to Andre Boyce at (571) 272-6726, or in his absence, the undersigned at (571) 272-7099.

This application is being referred to the Office of Data Management for processing into a patent.

for David A. Bucci
Petitions Examiner
Office of Petitions

SPE RESPONSE FOR CERTIFICATE OF CORRECTION

Paper No.: _____

DATE : February 11, 2011

TO SPE OF : ART UNIT 1795 SPE

SUBJECT : Request for Certificate of Correction for Appl. No.: 11/788,609 Patent No.: 7,854,830 B2

Please respond to this request for a certificate of correction within 7 days.

FOR IFW FILES:

Please review the requested changes/corrections as shown in the **COCIN** document(s) in the IFW application image. No new matter should be introduced, nor should the scope or meaning of the claims be changed.

Please complete the response (see below) and forward the completed response to scanning using document code **COCX**.

FOR PAPER FILES:

Please review the requested changes/corrections as shown in the attached certificate of correction. Please complete this form (see below) and forward it with the file to:

Certificates of Correction Branch (CofC)
Randolph Square Building
2800 South Randolph Street
Arlington, VA 22206

Should the changes in the claims be approved as requested by applicant?
See COCIN dated 01-25-2011

Antonio Johnson

Certificates of Correction Branch
(571)272-0483

Thank You For Your Assistance

The request for issuing the above-identified correction(s) is hereby:
Note your decision on the appropriate box.

❑ **Approved**	**All** changes apply.
X Approved in Part	Specify below which changes **do not** apply.
❑ **Denied**	State the reasons for denial below.

Comments: Change to column 7, line 65 (after "one rotatable gear" insert --and a means for slidably placing an electric charge on the plurality of turbine blades--) is not approved because the limitation is already recited, though not verbatim. Change to column 7, line 56 (to replace "at least one" with -- a --) is not approved, because this change would cause antecedent basis issues for subsequent references to the at least one rotatable gear. Change to column 8, lines 16-18 (to delete "wherein each mount assembly comprises a mount shaft secured to at least one mount block") is not approved because it would broaden the scope of the claim. Change to column 9, line 1 (to insert -- assembly comprises a mount shaft secured to at least one mount block--) is not approved because the limitation is already recited in the previous claim. In summary, all corrections are not approved except changing the word "vanes" to -- blades --.

SPE RESPONSE FOR CERTIFICATE OF CORRECTION

/LUAN V VAN/

Primary Examiner, Art Unit 1724

2/11/11

SPE_____ **Art Unit** _____

UNITED STATES PATENT AND TRADEMARK OFFICE

Commissioner for Patents
United States Patent and Trademark Office
P.O. Box 1450
Alexandria, VA 22313-1450
www.uspto.gov

MAILED

OCT 12 2010

OFFICE OF PETITIONS

COLIN P. ABRAHAMS
SUITE 400
5850 CANOGA AVENUE
WOODLAND HILLS CA 91367

In re Application of	:	
Gary ALSTOT, et al	:	
Application No. 11/788,699	:	DECISION ON PETITION
Filed: April 20, 2007	:	
Attorney Docket No. 1147-119.US	:	

This is a decision on the petition under the unintentional provisions of 37 CFR 1.137(b), filed August 30, 2010, to revive the above-identified application.

The petition is **GRANTED**.

The application became abandoned for failure to reply in a timely manner to the Restriction Requirement, mailed February 25, 2009, which set a shortened statutory period for reply of one (1) month or thirty (30) days (whichever is later). No extensions of time under the provisions of 37 CFR 1.136(a) were obtained. Accordingly, the application became abandoned on April 26, 2009.

The petition satisfies the requirements of 37 CFR 1.137(b) in that petitioner has supplied (1) the reply in the form of an election, (2) the petition fee of $810; and (3) the required statement of unintentional delay.

Telephone inquiries concerning this decision should be directed to the undersigned at (571) 272-6735.

This application is being referred to Technology Center AU 2839 for appropriate action by the Examiner in the normal course of business.

/DCG/
Diane C. Goodwyn
Petitions Examiner
Office of Petitions

UNITED STATES PATENT AND TRADEMARK OFFICE

Commissioner for Patents
United States Patent and Trademark Office
P.O. Box 1450
Alexandria, VA 22313-1450
www.uspto.gov

LAW OFFICES OF BURTANEK & BHATTACHARYYA, LTD.
5575 STERRETT PLACE
SUITE 320
COLUMBIA MD 21044

MAILED

OCT 3 1 2011

OFFICE OF PETITIONS

In re Application of :
Duron et al. :
Application No. 11/788,751 : DECISION ON PETITION
Filed: April 21, 2007 :
Attorney Docket No. BIOSTAR.07.16 :

This is a decision on the petition, filed April 22, 2011, which is being treated as a petition under 37 CFR 1.181 requesting withdrawal of the holding of abandonment in the above-identified application.

The petition is **DISMISSED**.

Any request for reconsideration of this decision should be filed within two (2) months from the mail date of this decision. *Note* 37 CFR 1.181(f). The request for reconsideration should include a cover letter and be entitled as a "Renewed Petition under 37 CFR 1.181 to Withdraw the Holding of Abandonment."

This above-identified application became abandoned for failure to timely file a proper reply within the meaning of 37 CFR 1.113 to the final Office Action of May 18, 2010. An amendment, drawings, application data sheet (ADS) and specification were submitted on November 18, 2010. A Notice of Non- Compliant Amendment and advisory action were mailed December 7, 2010. The advisory action mailed on December 7, 2010 informed applicant the response submitted on November 18, 2010 failed to place the application in condition for allowance. A three month extension of time was obtained pursuant to 37 CFR 1.136. This application was held abandoned on November 19, 2010. A Notice of Abandonment was mailed on February 23, 2011.

Petitioner contends that the Office improperly issued an advisory action and Non-Compliant Amendment on December 7, 2010. Petitioner maintains that the November 18, 2010 response was timely and proper and the application is substantially allowable. Petitioner request the issuance of a Notice of Allowance.

Petitioner's argument has been considered but determined to be unpersuasive. A review of the record shows that the amendment submitted on November 18, 2010 failed to place the application in condition for allowance. Pursuant to 37 CFR 1.116 (b) the admission of, or refusal to admit, any amendment after a final rejection, a final action, an action closing prosecution, or any related proceedings will not operate to relieve the application or patent

under reexamination from its condition as subject to appeal or to save the application from abandonment under § 1.135, or the reexamination from termination. MPEP 711.03 (c) is clear that an amendment after final rejection will not operate to avoid abandonment of the application in the absence of a timely and proper appeal, when the applicant simply permits the maximum extendable statutory period for reply to expire while awaiting a notice of allowance or other action.

Petitioner also argues that the application may be allowed with further amendment made by the examiner pursuant to MPEP 1302.01. However applicants' argument is not convincing as applicant failed to properly reply to the specific objection raised in the final rejection.

Since a Notice of Appeal (and appeal fee required by 37 CFR 41.20(b)(2)), an amendment that *prima facie* places the application in condition for allowance, a Request for Continued Examination (RCE) and submission (37 CFR 1.114), or the filing of a continuing application under 37 CFR 1.53(b) was not submitted within the maximum extendable time period (November 18, 2010) the application was properly held abandoned.

Thus, the application was properly held abandoned.

If petitioner cannot supply the evidence necessary to withdraw the holding of abandonment, or simply does not wish to, petitioner should consider filing a petition under 37 CFR 1.137(b) stating that the delay was unintentional. Public Law 97-247, § 3, 96 Stat. 317 (1982), which revised patent and trademark fees, amended 35 U.S.C. § 41(a)(7) to provide for the revival of an "unintentionally" abandoned application without a showing that the delay in prosecution or in late payment of the issue fee was "unavoidable." This amendment to 35 U.S.C. § 41(a)(7) has been implemented in 37 CFR 1.137(b). An "unintentional" petition under 37 CFR 1.137(b) must be accompanied by the $1620/ $810 petition fee.

Further correspondence with respect to this matter should be addressed as follows:

By Mail: Mail Stop PETITION
Commissioner for Patents
P. O. Box 1450
Alexandria, VA 22313-1450

By hand: U. S. Patent and Trademark Office
Customer Service Window, Mail Stop Petitions
Randolph Building
401 Dulany Street
Alexandria, VA 22314

By facsimile: **(571) 273-8300**
Attn: Office of Petitions

Telephone inquiries concerning this decision should be directed to the undersigned at (571) 272-3215.

/Charlema Grant/
Charlema Grant
Attorney Advisor
Office of Petitions

UNITED STATES PATENT AND TRADEMARK OFFICE

Commissioner for Patents
United States Patent and Trademark Office
P.O. Box 1450
Alexandria, VA 22313-1450
www.uspto.gov

WADDEY & PATTERSON, P.C.
1600 DIVISION STREET, SUITE 500
NASHVILLE, TN 37203

MAILED

AUG 12 2010

OFFICE OF PETITIONS

In re Application of	:	
John G. WILMOT, et *al.*	:	
Application No. 11/788,823	:	DECISION GRANTING PETITION
Filed: April 20, 2007	:	UNDER 37 CFR 1.313(c)(2)
Attorney Docket No. **N3402_002**	:	

This is a decision on the petition under 37 CFR 1.313(c)(2), filed August 10, 2010, to withdraw the above-identified application from issue after payment of the issue fee. .

The petition is **GRANTED**.

The above-identified application is withdrawn from issue for consideration of a submission under 37 CFR 1.114 (request for continued examination). *See* 37 CFR 1.313(c)(2).

Petitioner is advised that the issue fee paid on July 14, 2010 cannot be refunded. If, however, this application is again allowed, petitioner may request that it be applied towards the issue fee required by the new Notice of Allowance.[1]

Telephone inquiries should be directed to the undersigned at (571) 272-7253.

This application is being referred to Technology Center AU 3763 for processing of the request for continued examination under 37 CFR 1.114 and for consideration of the concurrently filed information disclosure statement.

/Monica A. Graves/
Petitions Examiner, Office of Petitions

---

[1] *The request to apply the issue fee to the new Notice may be satisfied by completing and returning the new Part B – Fee(s) Transmittal Form (along with any balance due at the time of submission). Petitioner is advised that the Issue Fee Transmittal Form* ***must*** *be completed and timely submitted to avoid abandonment of the application.*

UNITED STATES PATENT AND TRADEMARK OFFICE

Commissioner for Patents
United States Patent and Trademark Office
P.O. Box 1450
Alexandria, VA 22313-1450
www.uspto.gov

LAW OFFICE OF ROBERT C. KLINGER
2591 DALLAS PARKWAY
SUITE 300
FRISCO TX 75034

MAILED
DEC 23 2010
OFFICE OF PETITIONS

In re Application of	:	
Brown, Michael	:	
Application No. 11/788,884	:	ON PETITION
Filed: April 23, 2007	:	
Attorney Docket No. P-128925(UTI)(CIP)	:	

This is a decision on the petition under 37 C.F.R. § 1.137(b), filed December 6, 2010, to revive the above-identified application.

The petition is **GRANTED**.

The petition satisfies the requirements of 37 CFR 1.137(b) in that petitioner has supplied (1) the reply in the form of the Issue Fee Transmittal with payment of the issue fee, along with an Oath/Declaration, (2) the petition fee of $810.00, and (3) a proper statement of unintentional delay.

Telephone inquiries concerning this decision should be directed to the undersigned at (571) 272-3206.

This matter is being referred to the Office of Data Management for processing into a patent.

Liana Walsh
Petitions Examiner
Office of Petitions

SPE RESPONSE FOR CERTIFICATE OF CORRECTION

Paper No.: _____

DATE : 11/17/11

TO SPE OF : ART UNIT: 1734

SUBJECT : Request for Certificate of Correction for Appl. No.: 11/788,903 Patent No. 7,887,627

CofC mailroom date 11/10/11

Please respond to this request for a certificate of correction within 7 days.

FOR IFW FILES:

Please review the requested changes/corrections as shown in the **COCIN** document(s) in the IFW application image. No new matter should be introduced, nor should the scope or meaning of the claims be changed.

Please complete the response (see below) and forward the completed response to scanning using document code **COCX**.

FOR PAPER FILES:

Please review the requested changes/corrections as shown in the attached certificate of correction. Please complete this form (see below) and forward it with the file to:

Certificates of Correction Branch (CofC)
Randolph Square – 9D10-A
Palm Location 7580

Ernest C. White, LIE

Certificates of Correction Branch

703-756-1814 _____

Thank You For Your Assistance

The request for issuing the above-identified correction(s) is hereby:
Note your decision on the appropriate box.

√	**Approved**	**All** changes apply.
☐	**Approved in Part**	Specify below which changes **do not** apply.
☐	**Denied**	State the reasons for denial below.

Comments: _____

/Emily Le/ 1734

SPE **Art Unit**

SPE RESPONSE FOR CERTIFICATE OF CORRECTION

DATE : 9-20-11

TO SPE OF : ART UNIT 1734

SUBJECT : Request for Certificate of Correction for Appl. No.: 11788904 Patent No.: 7828887

CofC mailroom date: 8-26-11

Please respond to this request for a certificate of correction within 7 days.

FOR IFW FILES:

Please review the requested changes/corrections as shown in the **COCIN** document(s) in the IFW application image. No new matter should be introduced, nor should the scope or meaning of the claims be changed.

Please complete the response (see below) and forward the completed response to scanning using document code **COCX**.

FOR PAPER FILES:

Please review the requested changes/corrections as shown in the attached certificate of correction. Please complete this form (see below) and forward it with the file to:

Certificates of Correction Branch (CofC)
Randolph Square – 9D40-E
Palm Location 7580

Note: _

Omega Lewis

703-756-1575

Thank You For Your Assistance

The request for issuing the above-identified correction(s) is hereby:
Note your decision on the appropriate box.

√ **Approved**	**All** changes apply.
☐ **Approved in Part**	Specify below which changes **do not** apply.
☐ **Denied**	State the reasons for denial below.

Comments:_____

_____

_____

_____

/Emily M. Le/ 1734

SPE **Art Unit**

UNITED STATES PATENT AND TRADEMARK OFFICE

Commissioner for Patents
United States Patent and Trademark Office
P.O. Box 1450
Alexandria, VA 22313-1450
www.uspto.gov

MAILED
FEB 28 2012
OFFICE OF PETITIONS

OSHA LIANG LLP
TWO HOUSTON CENTER
909 FANNIN
SUITE 3500
HOUSTON TX 77010

In re Application of	:	DECISION
Wiley, et al.	:	ON PETITION
Application No. 11/788,910	:	
Filed: April 23, 2007	:	
Attorney Docket Number: 17083/002003	:	

This is in response to the petition under 37 CFR 1.84(a)(2), filed July 16, 2007, for acceptance of color drawings.

The petition is **DISMISSED**.

Any request for reconsideration of this decision must be submitted within **TWO (2) MONTHS** from the mail date of this decision. Extensions of time under 37 CFR 1.136(a) are permitted. The reconsideration request should include a cover letter entitled, "Renewed Petition under 37 CFR 1.84(a)(2)". No further petition fee is required for a renewed petition.

A grantable petition under 37 C.F.R. 1.84(a)(2) must be accompanied by the following:

(1) The fee set forth in 37 C.F.R. 1.17(h);

(2) Three (3) sets of color drawings, or one (1) set if filed via EFS, and

(3) The specification contains appropriate language referring to the color drawings as the first paragraph in that portion of the specification relating to the brief description of the drawings.

In addition, MPEP 608.02 states that a petition to accept color drawings will only be granted when the Office "has determined that a color drawing or photograph is the only practical medium by which to disclose in a printed utility patent the subject matter to be patented."

Here, the Office has determined that color drawings are not necessary for an understanding of the invention. For example, the application consists entirely of method and systems claims. An application having at least one method claim does not require drawings for a filing date.

Further correspondence with respect to this matter should be addressed as follows:

By mail: Mail Stop Petitions
Commissioner for Patents
PO Box 1450
Alexandria VA 22313-1450

By FAX: 571-273-8300
Attn: Office of Petitions

The application is being forwarded to Group Art Unit 2857.

Telephone inquiries regarding this decision should be directed to the undersigned at (571)272-3207.

Cliff Congo
Petitions Attorney
Office of Petitions

UNITED STATES PATENT AND TRADEMARK OFFICE

Commissioner for Patents
United States Patent and Trademark Office
P.O. Box 1450
Alexandria, VA 22313-1450
www.uspto.gov

PAUL D. YASGER
ABBOTT LABORATORIES
100 ABBOTT PARK ROAD
DEPT. 377/AP6A
ABBOTT PARK, IL 60064-6008

MAILED
MAY 04 2011
OFFICE OF PETITIONS

In re Application of	:	
Robert W. Siegel, et al.	:	
Application No.: 11/788,949	:	ON PETITION
Filed: April 23, 2007	:	
Attorney Docket No.: 8166USO1	:	

This is a decision on the petition, filed May 2, 2011, under 37 CFR 1.313(c)(2) to withdraw the above-identified application from issue after payment of the issue fee.

The petition is **GRANTED**.

The above-identified application is withdrawn from issue for consideration of a submission under 37 CFR 1.114 (request for continued examination). See 37 CFR 1.313(c)(2).

Petitioner is advised that the issue fee paid on April 29, 2011, cannot be refunded. If, however, this application is again allowed, petitioner may request that it be applied towards the issue fee required by the new Notice of Allowance.[1]

Telephone inquiries relating to this decision should be directed to the undersigned at (571) 272-3204.

The application is being referred to Technology Center AU 1654 for further processing of the request for continued examination under 37 CFR 1.114 and for consideration of the concurrently filed Information Disclosure Statement (IDS).

/SDB/

Sherry D. Brinkley
Petitions Examiner
Office of Petitions

[1] *The request to apply the issue fee to the new Notice may be satisfied by completing and returning the new Part B – Fee(s) Transmittal Form (along with any balance due at the time of submission). Petitioner is advised that the Issue Fee Transmittal Form* ***must*** *be completed and timely submitted to avoid abandonment of the application.*

UNITED STATES PATENT AND TRADEMARK OFFICE

UNITED STATES DEPARTMENT OF COMMERCE
United States Patent and Trademark Office
Address: COMMISSIONER FOR PATENTS
P.O. Box 1450
Alexandria, Virginia 22313-1450
www.uspto.gov

APPLICATION NO.	FILING DATE	FIRST NAMED INVENTOR	ATTORNEY DOCKET NO.	CONFIRMATION NO.
11/788,983	04/23/2007	Shun Kurata	4041J-001292	7350

7590 03/21/2011
HARNESS, DICKEY & PIERCE, P.L.C.
P.O. BOX 828
BLOOMFIELD HILLS, MI 48303

EXAMINER
EDWARDS, PATRICK

ART UNIT	PAPER NUMBER
3744	

MAIL DATE	DELIVERY MODE
03/21/2011	PAPER

DECISION GRANTING PETITION UNDER 37 CFR 1.138(d)

The declaration of express abandonment is recognized

This is in response to the petition under 37 CFR 1.138(d), requesting for a refund of any previously paid search fee and excess claims fee in the above-identified application.

The petition is granted.

The express abandonment is recognized. Any previously paid search fee and excess claims fee are hereby refunded.

Telephone inquiries should be directed to the Office of Data Management at (571) 272-4200.

Betty Powell

Patent Publication Branch
Office of Data Management

FORM PET651G (Rev. 08/07)

SPE RESPONSE FOR CERTIFICATE OF CORRECTION

DATE : 08/27/10 Paper No.: _____

TO SPE OF : ART UNIT 1624

SUBJECT : Request for Certificate of Correction for Appl. No.: 11789018 Patent No.: 7576199

Please respond to this request for a certificate of correction within 7 days.

FOR IFW FILES:

Please review the requested changes/corrections as shown in the **COCIN** document(s) in the IFW application image. No new matter should be introduced, nor should the scope or meaning of the claims be changed.

Please complete the response (see below) and forward the completed response to scanning using document code **COCX**.

FOR PAPER FILES:

Please review the requested changes/corrections as shown in the attached certificate of correction. Please complete this form (see below) and forward it with the file to:

Certificates of Correction Branch (C of C)
Randolph Square 9D40-D
Palm Location 7580
You can fax the Director/SPE response to 571-273-9990

Lamonte Newsome
Certificates of Correction Branch
703-756-1574

Thank You For Your Assistance

The request for issuing the above-identified correction(s) is hereby:
Note your decision on the appropriate box.

X **Approved**	All changes apply.
☐ **Approved in Part**	Specify below which changes **do not** apply.
☐ **Denied**	State the reasons for denial below.

Formatted: Indent: Left: 1.22"

Comments: The changes recited on the page following the coversheet do not apply to 11/789018.

The changes which are within the box are the correct changes.

PTOL-306 (REV. 7/03) U.S. DEPARTMENT OF COMMERCE Patent and Trademark Office

SPE RESPONSE FOR CERTIFICATE OF CORRECTION

/Joseph K. McKane/ 1626

Deleted:

SPE Art Unit

PTOL-308 (REV. 7/03) U.S. DEPARTMENT OF COMMERCE Patent and Trademark Office

UNITED STATES PATENT AND TRADEMARK OFFICE

Commissioner for Patents
United States Patent and Trademark Office
P.O. Box 1450
Alexandria, VA 22313-1450
www.uspto.gov

Paper No.

Constantine N. Colyvas
59 Valorie Rd.
Southampton NY 11968

MAILED

FEB 22 2011

OFFICE OF PETITIONS

In re Application of	:	
Constantine N. Colyvas	:	
Application No. 11/789,071	:	DECISION ON FOURTH RENEWED
Filed: April 24, 2007	:	PETITION PURSUANT TO
Title: EASY IN SAND-BRELLA	:	37 C.F.R. § 1.181(A)

This is a decision on the fourth renewed petition pursuant to 37 C.F.R. § 1.181(a) to withdraw the holding of abandonment, filed on August 13, 2010.

The above-identified application became abandoned for failure to reply within the meaning of 37 C.F.R § 1.113 in a timely manner to the final Office action mailed January 26, 2009, which set a shortened statutory period for reply of three months. An after-final response was received on February 11, 2009, and an advisory action was mailed on March 24, 2009. No extensions of time under the provisions of 37 C.F.R § 1.136(a) were obtained, and no further response that constituted a proper response was received. Accordingly, the above-identified application became abandoned on April 27, 2009. A notice of abandonment was mailed on August 31, 2009.

An original petition pursuant to 37 C.F.R. § 1.181(a) was filed on August 20, 2009, and was dismissed via the mailing of a decision on September 30, 2009.

A renewed petition pursuant to 37 C.F.R. § 1.181(a) was filed on October 9, 2009, and was dismissed via the mailing of a decision on November 23, 2009.

A second renewed petition pursuant to 37 C.F.R. § 1.181(a) was filed on December 18, 2009, and was dismissed via the mailing of a decision on January 11, 2010.

A third renewed petition pursuant to 37 C.F.R. § 1.181(a) was filed on January 21, 2010, and was denied via the mailing of a decision on May 24, 2010.

It is suggested that Petitioner file a petition under 37 C.F.R. 1.137. Given the facts of the case, delay in filing such a petition will be interpreted as intentional delay that will preclude this application from being revived. This means that Petitioner's next letter requesting that the holding of abandonment be withdrawn will be treated as an act of intentional delay since a final agency action has been given on this issue.

In a final agency action, within the meaning of 35 U.S.C. § 704, mailed May 24, 2010, the petition under 37 C.F.R. § 1.181(a) and the included request to withdraw the holding of abandonment was **DENIED**. It was concluded for reasons set forth in the decision that Applicant had failed to establish that the holding of abandonment should be withdrawn.

There will be no further consideration of the withdrawal of the holding of abandonment by the Office.

Telephone inquiries regarding this decision should be directed to Senior Attorney Paul Shanoski at (571) 272-3225.

Anthony Knight
Director
Office of Petitions

UNITED STATES PATENT AND TRADEMARK OFFICE

Commissioner for Patents
United States Patent and Trademark Office
P.O. Box 1450
Alexandria, VA 22313-1450
www.uspto.gov

Decision Date : May 24,2011

In re Application of :

Donald Wood

Application No : 11789092

Filed : 23-Apr-2007

Attorney Docket No : DWW-108-A-1

DECISION ON PETITION

UNDER CFR 1.137(b)

This is an electronic decision on the petition under 37 CFR 1.137(b), filed May 24,2011 , to revive the above-identified application.

The petition is **GRANTED.**

The above-identified application became abandoned for failure to reply in a timely manner to the Notice of Allowance and Issue Fee(s) Due. The date of abandonment is the day after the expiration date of the period set for reply in the Notice.

The electronic petition satisfies the conditions for revival pursuant to the provisions of 37 CFR 1.137(b) in that (1) the reply in the form of payment of the Issue Fee and the Publication Fee (if necessary); (2) the petition fee as set forth in 37 CFR 1.17 (m); (3) the drawing correction and/or other deficiencies (if necessary); and (4) the required statement of unintentional delay have been received. Accordingly, the Issue Fee payment is accepted as having been unintentionally delayed.

Telephone inquiries concerning this decision should be directed to the Patent Electronic Business Center (EBC) at 866-217-9197.

This application file is being directed to the Office of Data Management.

Office of Petitions

Doc Code: PET.AUTO Document Description: Petition automatically granted by EFS-Web	PTO/SB/64 U.S. Patent and Trademark Office Department of Commerce

Electronic Petition Request	PETITION FOR REVIVAL OF AN APPLICATION FOR PATENT ABANDONED UNINTENTIONALLY UNDER 37 CFR 1.137(b)
Application Number	11789092
Filing Date	23-Apr-2007
First Named Inventor	Donald Wood
Art Unit	3633
Examiner Name	ADRIANA FIGUEROA
Attorney Docket Number	DWW-108-A-1
Title	PATIO ENCLOSURE

The above-identified application became abandoned for failure to file a timely and proper reply to a notice or action by the United States Patent and Trademark Office. The date of abandonment is the day after the expiration date of the period set for reply in the office notice or action plus any extensions of time actually obtained.

APPLICANT HEREBY PETITIONS FOR REVIVAL OF THIS APPLICATION

NOTE: A grantable petition requires the following items:
(1) Petition fee;
(2) Reply and/or issue fee;
(3) Terminal disclaimer with disclaimer fee – required for all utility and plant applications filed before June 8, 1995; and for all design applications;
(4) Statement that the entire delay was unintentional.

Petition fee
The petition fee under 37CFR 1.17(m) is attached.

☐ Applicant claims SMALL ENTITY status. See 37 CFR 1.27.

☐ Applicant is no longer claiming SMALL ENTITY status. See 37 CFR 1.27(g)(2).

☒ Applicant(s) status remains as SMALL ENTITY.

☐ Applicant(s) status remains as other than SMALL ENTITY.

Issue Fee and Publication Fee :

Issue Fee and Publication Fee must accompany ePetition.

☒ Issue Fee Transmittal is attached

Drawing corrections and/ or other deficiencies.

- (●) Drawing corrections and/ or other deficiencies are not required
- ( ) I certify, in accordance with 37 CFR 1.4.(D)(4), that drawing corrections and/ or other deficiencies have previously been filed on
- ( ) Drawing corrections and/ or other deficiencies are attached.

☒ STATEMENT: The entire delay in filing the required reply from the due date for the required reply until the filing of a grantable petition under 37 CFR 1.137(b) was unintentional.

THIS PORTION MUST BE COMPLETED BY THE SIGNATORY OR SIGNATORIES

I certify, in accordance with 37 CFR 1.4(d)(4) that I am:

- (●) An attorney or agent registered to practice before the Patent and Trademark Office who has been given power of attorney in this application.
- ( ) An attorney or agent registered to practice before the Patent and Trademark Office, acting in a representative capacity.
- ( ) A sole inventor
- ( ) A joint inventor; I certify that I am authorized to sign this submission on behalf of all of the inventors.
- ( ) A joint inventor; all of whom are signing this e-petition.
- ( ) The assignee of record of the entire interest that has properly made itself of record pursuant to 37 CFR 3.71.

Signature	/Arnold S. Weintraub/
Name	Arnold S. Weintraub
Registration Number	25523

UNITED STATES PATENT AND TRADEMARK OFFICE

Commissioner for Patents
United States Patent and Trademark Office
P.O. Box 1450
Alexandria, VA 22313-1450
www.uspto.gov

HEWLETT-PACKARD COMPANY
INTELLECTUAL PROPERTY ADMINISTRATION
3404 E. HARMONY ROAD
MAIL STOP 35
FORT COLLINS CO 80528

MAILED

DEC 14 2010

OFFICE OF PETITIONS

In re Application of
Christopher O. Oriakhi et al. :
Application No. 11/789,096 : ON PETITION
Filed: April 23, 2007 :
Attorney Docket Number: 200603666-1 :

This is a decision on the petition, filed November 30, 2010 under 37 CFR 1.137(b)[1], to revive the above identified application.

The petition is **GRANTED**.

While the issue fee was paid October 4, 2010, this application became abandoned October 18, 2010 for failure to file corrected drawings in response to the Notice of Allowability mailed on July 15, 2010. Accordingly, the Notice of Abandonment was mailed on November 1, 2010.

All other requirements of 37 CFR 1.137(b) having now been met, this matter is being referred to the Publishing Division to be processed into a patent.

Telephone inquiries concerning this matter may be directed to the undersigned Petitions Attorney at (571) 272-3212.

Patricia Faison-Ball
Senior Petitions Attorney
Office of Petitions

---

[1]Effective December 1, 1997, the provisions of 37 CFR 1.137(b) now provide that where the delay in reply was unintentional, a petition may be filed to revive an abandoned application or a lapsed patent pursuant to 37 CFR 1.137(b). A grantable petition filed under the provisions of 37 CFR 1.137(b) must be accompanied by:

(1) the required reply, unless previously filed. In a nonprovisional application abandoned for failure to prosecute, the required reply may be met by the filing of a continuing application. In an application or patent, abandoned or lapsed for failure to pay the issue fee or any portion thereof, the required reply must be the payment of the issue fee or any outstanding balance thereof.

(2) the petition fee as set forth in 37 CFR 1.17(m);

(3) a statement that the entire delay in filing the required reply from the due date for the reply until the filing of a grantable petition pursuant to 37 CFR 1.137(b) was unintentional. The Commissioner may required additional information where there is a question whether the delay was unintentional; and

(4) any terminal disclaimer (and fee as set forth in 37 CFR 1.20(d)) required pursuant to 37 CFR 1.137(c)).

UNITED STATES PATENT AND TRADEMARK OFFICE

Commissioner for Patents
United States Patent and Trademark Office
P.O. Box 1450
Alexandria, VA 22313-1450
www.uspto.gov

Date July 13, 2011

Patent No. :7954390
Inventor(s): :George A. Andrews, Jr. et al.
Issued :June 7, 2011
Title :BERNOULLI MUSHROOM INLET HOUSING FOR EFFICIENT AIR SAMPLING

Re: Request for Certificate of Correction

Consideration has been given your request for the issuance of a certificate of correction for the above-identified patent under the provisions of Rules 1.322 and 1.323.

With respect to the alleged error concerning the deletion of an inventors' name; the names of the inventors are printed in accordance with the Declaration and/or ADS submitted at the time of filing the application or the filing of a petition during pendency. Review of the application file does not reveal a petition/ amendment that meet the requirement of changing the inventorship. Accordingly, correction is not warranted under 1.322 or 1.323 as filed.

In view of the foregoing, your request is hereby denied.

However, your attention is directed to 37 C.F.R. 1.324, wherein a request is being made to add or delete inventor(s), after issuance of the patent.

Any inquiry concerning this communication should be directed to Ms. A. Green at (571) 272-9005

Mary Diggs, Supervisor
Decisions & Certificates
of Correction Branch
(703) 756-7580 or (571) 272- 9005

Gerhard W. Thielman
Department of the Navy
17632 Dahlgren Road, Suite 158
Dahlgren, VA 22448-5110

/arg

UNITED STATES PATENT AND TRADEMARK OFFICE

Commissioner for Patents
United States Patent and Trademark Office
P.O. Box 1450
Alexandria, VA 22313-1450
www.uspto.gov

Paper No.

MAILED
JAN 25 2011
OFFICE OF PETITIONS

DAVIS & BUJOLD, P.L.L.C.
112 PLEASANT STREET
CONCORD NH 03301

In re Application of	:	
Pleadwell et al.	:	
Application No. 11/789,224	:	DECISION ON PETITION
Patent No. 7,757,814	:	
Filed: April 24, 2007	:	
Issue Date: July 20, 2010	:	
Attorney Docket No. THOLAM	:	
P351US	:	
Title: LADDER STABILIZER	:	

BACKGROUND

This is a decision on the "SUBMISSION OF CERTIFIED COPY AND PETITION FOR LATE ENTRY OF SAME UNDER 37 CFR 1.55(a)(2)", filed June 21, 2010, requesting that the above-identified patent be accorded a priority date of April 24, 2006. This submission is being treated as a petition pursuant to 37 C.F.R. § 1.55(a). A supplement to this petition was received on January 10, 2011.

The application from which this patent matured was filed on April 24, 2007. The declaration which was included on filing claimed priority to Canadian Application No. 2,543,948, filed on April 24, 2006. However, no certified copy of the priority papers was filed, the issue fee was submitted on June 9, 2010, and the patent issued on July 20, 2010. The priority papers were submitted concurrently with this petition, prior to the issuance of this patent.

RELEVANT LAW, RULE, AND PORTION OF THE MPEP

35 U.S.C. § 119(a) sets forth, *in toto*:

> An application for patent for an invention filed in this country by any person who has, or whose legal representatives or assigns have, previously regularly filed an application for a patent for the same invention in a foreign country which affords similar privileges in the case of applications filed in the United States or to citizens of the United States, or in a WTO member country, shall have the same effect as the same application would have if filed in this country on the date on which the application for patent for the same invention was first filed in such foreign country, if the application in this country is filed within twelve months from the earliest date on which such foreign application was filed; but no patent shall be granted on any application for patent for an invention which had been patented or described in a printed publication in any country more than one year before the date of the actual filing of the application in this country, or which had been in public use or on sale in this country more than one year prior to such filing.

37 CFR § 1.55(a)(2) sets forth, *in toto*:

> The claim for priority and the certified copy of the foreign application specified in 35 U.S.C. 119(b) or PCT Rule 17 must, in any event, be filed before the patent is granted. If the claim for priority or the certified copy of the foreign application is filed after the date the issue fee is paid, it must be accompanied by the processing fee set forth in § 1.17(i), but the patent will not include the priority claim unless corrected by a certificate of correction under 35 U.S.C. 255 and § 1.323

MPEP § 201.13(II)(B) sets forth, *in toto*:

> 35 U.S.C. 119(b)(3) authorizes the Office to require the applicant to furnish a certified copy of priority papers. Applicants are required to submit the certified copy of the foreign application specified in 35 U.S.C. 119(b) or PCT Rule 17 before the patent is granted. <u>If the</u> claim for priority or the <u>certified copy of the foreign application is filed after the date the issue fee is paid, it must be accompanied by the processing fee set forth in 37 CFR 1.17(i), but the patent will not include the priority claim unless corrected by a certificate of correction under 35 U.S.C. 255 and 37 CFR 1.323. See 37 CFR 1.55(a)(2)</u> (emphasis added). Certification by the authority empowered under a bilateral or multilateral treaty to receive applications which give rise to a right of priority under Article 4A(2) of the Paris Convention will be deemed to satisfy the certification requirement.

ANALYSIS

A certificate of correction under 35 U.S.C. § 255 and 37 C.F.R. § 1.323 may be requested and issued in order to perfect a claim for foreign priority benefit in a patented continuing application if the requirements of 35 U.S.C. §§ 119(a)-(d) or (f) had been satisfied in the parent application prior to issuance of the patent and the requirements of 37 C.F.R. § 1.55(a) are met. Furthermore, if the continuing application (other than a design application), which issued as a patent, was filed on or after November 29, 2000, in addition to the filing of a certificate of correction request, patentee must also file a petition for an unintentionally delayed foreign priority claim under 37 C.F.R. § 1.55(c).

However, a claim to foreign priority benefits cannot be perfected via a certificate of correction if the requirements of 35 U.S.C. §§ 119(a)-(d) or (f) had not been satisfied in the patented application, or its parent, prior to issuance and the requirements of 37 C.F.R. § 1.55(a) are not met. In this latter circumstance, the claim to foreign priority benefits can be perfected only by way of a reissue application in accordance with the rationale set forth in Brenner v. State of Israel, 158 USPQ 584.

The requirements of 35 U.S.C. 119(a)-(d) or (f) have been satisfied, and Office records (PALM) show that application No. 11/789,224 claims foreign priority to Canadian Application No. 2,543,948, filed on April 24, 2006. Therefore, the requirements of 37 C.F.R. § 1.55(a) have been met.

CONCLUSION

The petition is **GRANTED**.

Receipt of both the certificate of correction that was submitted on January 10, 2011 and the $130 processing fee that is associated with the submission of the same (received on June 21, 2010) is acknowledged.

Both the $1,410 fee that is associated with the filing of a petition to accept an unintentionally delayed claim for priority and the $100 certificate of correction fee will be charged to Deposit Account number 04-0213 in due course, as authorized in this petition.

The Certificates of Correction Branch will be notified of this decision so that the requested Certificate of Correction can be issued.

Telephone inquiries regarding *this decision* should be directed to Senior Attorney Paul Shanoski at (571) 272-3225. Any questions concerning the issuance of a certificate of correction should be directed to the Certificates of Correction Branch at (703) 305-8309.

Chris Bottorff
Supervisor
Office of Petitions

UNITED STATES PATENT AND TRADEMARK OFFICE

Commissioner for Patents
United States Patent and Trademark Office
P.O. Box 1450
Alexandria, VA 22313-1450
www.uspto.gov

Paper No.

MAILED
MAY 13 2011
OFFICE OF PETITIONS

DAVIS & BUJOLD, P.L.L.C.
112 PLEASANT STREET
CONCORD NH 03301

In re Application of	:	
Pleadwell et al.	:	
Application No. 11/789,224	:	DECISION ON RENEWED PETITION
Patent No. 7,757,814	:	
Filed: April 24, 2007	:	
Issue Date: July 20, 2010	:	
Attorney Docket No. THOLAM	:	
P351US	:	
Title: LADDER STABILIZER	:	

This is a decision on the "REQUEST FOR RECONSIDERATION OF DECISION ON PETITION", filed February 9, 2011, requesting the refund of $1410. This submission is being treated as a renewed petition pursuant to 37 C.F.R. § 1.55(a).

An original petition pursuant to 37 C.F.R. § 1.55(a) was filed on June 21, 2010, and supplemented on January 10, 2011. The original petition was granted via the mailing of a decision on January 25, 2011, which set forth, *in pertinent part*:

> "The application from which this patent matured was filed on April 24, 2007. The declaration which was included on filing claimed priority to Canadian Application No. 2,543,948, filed on April 24, 2006. However, no certified copy of the priority papers was filed, the issue fee was submitted on June 9, 2010, and the patent issued on July 20, 2010. The priority papers were submitted concurrently with this petition, prior to the issuance of this patent.
>
> ...
>
> Furthermore, if the continuing application (other than a design application), which issued as a patent, was filed on or after November 29, 2000, in addition to the filing of a certificate of

> correction request, patentee must also file a petition for an unintentionally delayed foreign priority claim under 37 C.F.R. § 1.55(c)."

The renewed petition is **GRANTED.**

The $1,410 fee that was charged to Deposit Account number 04-0213 on January 24, 2011 will be refunded in due course.

Telephone inquiries regarding *this decision* should be directed to Senior Attorney Paul Shanoski at (571) 272-3225.

Anthony Knight
Director
Office of Petitions

UNITED STATES PATENT AND TRADEMARK OFFICE

Commissioner for Patents
United States Patent and Trademark Office
P.O. Box 1450
Alexandria, VA 22313-1450
www.uspto.gov

CLARK & ELBING LLP
101 FEDERAL STREET
BOSTON MA 02110

MAILED
JAN 03 2011
OFFICE OF PETITIONS

In re Application of :
Michael B. YAFFE, et al :
Application No. 11/789,239 : DECISION ON PETITION
Filed: April 24, 2007 :
Docket No. 01997/562004 :

This is a decision on the petition under the unintentional provisions of 37 CFR 1.137(b), filed November 30, 2010, to revive the above-identified application.

The petition is **GRANTED**.

The application became abandoned for failure to reply in a timely manner to the non-final Office action mailed, February 3, 2010, which set a shortened statutory period for reply of **three (3) months.** No extensions of time under the provisions of 37 CFR 1.136(a) were obtained. Accordingly, the application became abandoned on May 4, 2010.

The petition satisfies the requirements of 37 CFR 1.137(b) in that petitioner has supplied (1) the reply in the form of an amendment, (2) the petition fee of $810; and (3) a proper statement of unintentional delay.

An extension of time under 37 CFR 1.136 must be filed prior to the expiration of the maximum extendable period for reply. *See* In re Application of S., 8 USPQ2d 1630, 1631 (Comm'r Pats. 1988). Since the $555 extension of time fee submitted with the petition on November 30, 2010, was subsequent to the maximum extendable period for reply, this fee is unnecessary and will be credited to petitioner's deposit account.

Telephone inquiries concerning this decision should be directed to the undersigned at (571) 272-6735.

This application is being referred to Technology Center AU 1654 for appropriate action by the Examiner in the normal course of business.

/Diane C. Goodwyn/
Diane C. Goodwyn
Petitions Examiner
Office of Petitions

UNITED STATES PATENT AND TRADEMARK OFFICE

UNITED STATES DEPARTMENT OF COMMERCE
United States Patent and Trademark Office
Address: COMMISSIONER FOR PATENTS
P.O. Box 1450
Alexandria, Virginia 22313-1450
www.uspto.gov

APPLICATION NO.	FILING DATE	FIRST NAMED INVENTOR	ATTORNEY DOCKET NO.	CONFIRMATION NO.
11/789,239	04/24/2007	Michael B. Yaffe	01997/562004	9035

21559 7590 05/31/2011
CLARK & ELBING LLP
101 FEDERAL STREET
BOSTON, MA 02110

EXAMINER
TELLER, ROY R

ART UNIT	PAPER NUMBER
1654	

NOTIFICATION DATE	DELIVERY MODE
05/31/2011	ELECTRONIC

Please find below and/or attached an Office communication concerning this application or proceeding.

The time period for reply, if any, is set in the attached communication.

Notice of the Office communication was sent electronically on above-indicated "Notification Date" to the following e-mail address(es):

patentadministrator@clarkelbing.com

UNITED STATES PATENT AND TRADEMARK OFFICE

Commissioner for Patents
United States Patent and Trademark Office
P.O. Box 1450
Alexandria, VA 22313-1450
www.uspto.gov

MAY 3 1 2011

CLARK & ELBING LLP
101 FEDERAL STREET
BOSTON MA 02110

In re Application of:	:
Yaffe et al.	:
Serial No.: 11/789,239	: PETITION DECISION
Filed: April 24, 2007	:
Attorney Docket No.: **01997/562004**	:

This is in response to the petition under 37 CFR § 1.181, filed May 13, 2011, requesting that the finality of the Office action of March 17, 2011 be withdrawn.

BACKGROUND

The examiner mailed a non-final Office action on February 3, 2010 setting a three month statutory limit for reply. At the time of this non-final Office action, claims 1-34 were pending. The examiner rejected claims 1-7, 9-12, 17-25 and 27-34 and withdrew claims 8, 13-16 and 26 from consideration. Claims 1-7, 9-12, 20-25 and 27-34 were rejected under 35 USC 112, first paragraph, as failing to comply with the written description requirement. Claim 1-7, 9-12, 17, 20-25 and 27-34 were rejected under 35 U.S.C. 102(e) as being anticipated by Deveraux et al.

In reply to the non-final Office action of February 3, 2010, applicants filed a response on November 30, 2010. The response submitted by applicants included remarks, arguments traversing the rejections made in the non-final Office action and amendments to the claims.

On March 17, 2011, the examiner mailed a final Office action setting a three month statutory limit for reply. At the time of this final Office action, claims 1-7, 9-12, 19-25 and 27-34 were pending. The examiner rejected claims 1-7, 9-12, 19-25 and 27-34. Claims 1-7, 9-12, 20-25 and 27-34 were rejected under 35 USC 112, first paragraph, as failing to comply with the written description requirement. Claim 1-7, 9-12, 17, 20-25 and 27-34 were rejected under 35 U.S.C. 102(e) as being anticipated by Deveraux et al. The examiner indicated that applicant's amendment necessitated the new ground(s) of rejection.

In response thereto, applicants filed this petition on May 13, 2011, requesting that the finality of the Office action of March 17, 2011 be withdrawn.

DISCUSSION

The petition and the file history have been carefully considered.

In the petition filed by applicants on May 13, 2011, applicants submit that the finality of the Office action of March 17, 2011 is premature. Applicants argue that "The amendment to claim 1 did not necessitate the new ground for rejection set forth in the final action because this rejection could have been made prior to the November 30, 2010 amendment. As stated above, claim 1 was amended to incorporate the features of claim 18. Claim 18, which was pending and examined in the first Office Action, was not included in the written description rejection or anticipation rejection set forth in that Action. Clearly, claim 18 could have been rejected, but it was not. Now, the Examiner rejects claim 1, which is claim 18 rewritten in independent form, based on the same scope of written description rejection made in the first Office Action and as being anticipated by the same reference relied on in the first Office Action. These rejections could have been made in the first Office Action. Because these rejections were not made, Applicants were led to believe that claim 18 was free of these bases for rejection and the claims were amended accordingly. By not including claim 18 in the rejections made in the first Office Action, Applicants were not given the opportunity to respond to this rejection. For all of these reasons, withdrawal of finality is respectfully requested."

Applicants' argument is well taken and persuasive since applicants' amendments did not necessitate the new rejection. It is pointed out that MPEP § 706.07 recites:

> Under present practice, second or any subsequent actions on the merits shall be final, except where the examiner introduces a new ground of rejection that is neither necessitated by applicant's amendment of the claims nor based on information submitted in an information disclosure statement filed during the period set forth in 37 CFR 1.97(c) with the fee set forth in 37 CFR 1.17(p).
>
> Furthermore, a second or any subsequent action on the merits in any application or patent undergoing reexamination proceedings will not be made final if it includes a rejection, on newly cited art, other than information submitted in an information disclosure statement filed under 37 CFR 1.97(c) with the fee set forth in 37 CFR 1.17(p), of any claim not amended by applicant or patent owner in spite of the fact that other claims may have been amended to require newly cited art.

Thus, it is *not* proper for an office action to be made final when the examiner introduces a new ground of rejection that is neither necessitated by applicant's amendment of the claims nor based on information submitted in an information disclosure statement filed during the period set forth in 37 CFR 1.97(c). Accordingly, it is decided that Applicants' argument is well-taken and found persuasive.

DECISION

The petition is **GRANTED.**

The Office action mailed March 17, 2011 is hereby vacated to the extent that it was made "final" and the Office action is now considered to be a non-final Office action.

Should there be any questions about this decision please contact Marianne C. Seidel, by letter addressed to Director, TC 1600, at the address listed above, or by telephone at 571-272-0584 or by facsimile sent to the general Office facsimile number, 571-273-8300.

Jacqueline Stone
Director, Technology Center 1600

UNITED STATES PATENT AND TRADEMARK OFFICE

Commissioner for Patents
United States Patent and Trademark Office
P.O. Box 1450
Alexandria, VA 22313-1450
www.uspto.gov

AT&T CORP.
ROOM 2A207
ONE AT&T WAY
BEDMINSTER NJ 07921

MAILED

JUN 01 2011

OFFICE OF PETITIONS

In re Patent No. 7,894,329	:	
Issue Date: February 22, 2011	:	
Application No. 11/789,290	:	DECISION ON REQUEST
Filed: April 24, 2007	:	
Attorney Docket No. 2006-A1275	:	

This is a decision on the Request For Assignee Name And Residence Data To Be Printed On Patent, filed January 13, 2011, requesting to print assignee's name and residence -- AT&T Intellectual Property II, L.P., 645 E. Plumb Lane, Reno, Nevada 89502 -- to the Title Page of the Patent via a Certificate of Correction. The Request is being treated as a Request Under 37 CFR §1.322(a) for which no fee is required.

The request under 37 CFR §1.322(a) is **REFUSED**.

Requestor urges that the assignee's name and residence -- AT&T Intellectual Property II, L.P., 645 E. Plumb Lane, Reno, Nevada 89502 – be printed on the Title Page of the patent. Requestor is requesting that the Title Page of the above-identified patent be correct, via issuance of a Certificate of Correction, to add "645 E. Plumb Lane" and a zip code of "89502" to assignee's residence on the Title Page of the patent.

Section 1481.01, Correction of Assignee's Names, of the Manual of Patent Examining Procedures (MPEP) states, in part:

> "The Transmittal Form portion (PTOL-85B) of the Notice of Allowance provides a space (item 3) for assignment date which should be completed in order to comply with 37 CFR §3.81(b). Unless an assignee's name and address are identified in the appropriate space for specifying the assignee, (i.e., item 3 of the Transmittal Form PTOL-85B), the patent will issue to the applicant. Assignment date printed on the patent will be based solely on the information so supplied."

The PTOL-85B, item 3, requests that applicants provide the (1) "NAME OF THE ASSIGNEE" and (2) 'RESIDENCE: (CITY and STATE OR COUNTRY)" of the assignee to be printed on the patent. Since the PTOL-85B requests neither assignee's street address nor assignee's zip code, inclusion thereof, on the Title Page of the patent it is not appropriate.

Inquiries related this communication should be directed to the undersigned at (571)272-3213.

Cheryl Gibson Baylor

Cheryl Gibson-Baylor
Petitions Examiner
Office of Petitions

UNITED STATES PATENT AND TRADEMARK OFFICE

UNITED STATES DEPARTMENT OF COMMERCE
United States Patent and Trademark Office
Address: COMMISSIONER FOR PATENTS
P.O. Box 1450
Alexandria, Virginia 22313-1450
www.uspto.gov

APPLICATION NO.	FILING DATE	FIRST NAMED INVENTOR	ATTORNEY DOCKET NO.	CONFIRMATION NO.
11/789,421	04/10/2007	Frederick Gelfant	076110.00501	7513

34661 7590 12/01/2011
CHARLES N. QUINN
FOX ROTHSCHILD LLP
997 Lenox Drive, Bldg. #3
Lawrenceville, NJ 08648

EXAMINER
ADDIE, RAYMOND W

ART UNIT	PAPER NUMBER
3671	

NOTIFICATION DATE	DELIVERY MODE
12/01/2011	ELECTRONIC

Please find below and/or attached an Office communication concerning this application or proceeding.

The time period for reply, if any, is set in the attached communication.

Notice of the Office communication was sent electronically on above-indicated "Notification Date" to the following e-mail address(es):

ipdocket@foxrothschild.com

UNITED STATES PATENT AND TRADEMARK OFFICE

Commissioner for Patents
United States Patent and Trademark Office
P.O. Box 1450
Alexandria, VA 22313-1450
www.uspto.gov

NOV 30 2011

CHARLES N. QUINN
FOX ROTHSCHILD LLP
997 Lenox Drive, Bldg. #3
Lawrenceville, NJ 08648

In re Application of:	:	
GELFANT et al.	:	
Application No. 11/789,421	:	**DECISION ON PETITION**
Filed: April 10, 2007	:	**UNDER 37 CFR 1.181**
For: AGGLOMERATED RETROREFLECTIVE BEADS	:	
FOR HIGHWAY MARKING AND METHODS FOR	:	
FABRICATION AND USE THEREOF	:	

This is a decision in response to the petition filed August 26, 2011 "seeking exercise of the Commissioner's supervisory authority under 37 CFR 1.181(a)(3)."

The petition is **DISMISSED.**

Petitioner requests "issuance of an order entering applicant's 30 June 2011 Amendment After Final Rejection, and further requiring the 30 June 2011 Amendment After Final Rejection be considered on the merits."

A review of the application file shows that a Request for Continued Examination was filed October 25, 2011. Concurrently filed therewith is a letter from the applicant requesting "express withdrawal of [the] 26 August 2011 petition seeking exercise of the Commissioner's supervisory authority under 37 CFR 1.181(a)(3)." Accordingly, applicant's petition filed August 26, 2011 is dismissed.

A non-final Office action was mailed November 10, 2011. The application will be returned to the examiner's rejected docket to await a response.

Inquiries regarding this communication should be directed to Teri P. Luu, Quality Assurance Specialist, at (571) 272-7045

David Talbott, Director
Technology Center 3600
(571) 272-5150

/TL/ 11/18/11

UNITED STATES PATENT AND TRADEMARK OFFICE

Commissioner for Patents
United States Patent and Trademark Office
P.O. Box 1450
Alexandria, VA 22313-1450
www.uspto.gov

HOFFMANN & BARON, LLP
6900 JERICHO TURNPIKE
SYOSSET NY 11791

MAILED

SEP 10 2010

OFFICE OF PETITIONS

In re Application of	:	
Antti Kiviniemi, et al.	:	
Application No. 11/789,425	:	DECISION GRANTING PETITION
Filed: April 24, 2007	:	UNDER 37 CFR 1.313(c)(2)
Attorney Docket No. 187-115	:	

This is a decision on the petition under 37 CFR 1.313(c)(2), filed September 10, 2010, to withdraw the above-identified application from issue after payment of the issue fee.

The petition is **GRANTED**.

The above-identified application is withdrawn from issue for consideration of a submission under 37 CFR 1.114 (request for continued examination). *See* 37 CFR 1.313(c)(2).

Petitioner is advised that the issue fee paid on August 23, 2010 cannot be refunded. If, however, this application is again allowed, petitioner may request that it be applied towards the issue fee required by the new Notice of Allowance.[1]

Telephone inquiries concerning this decision should be directed to undersigned at (571) 272-1642. All other inquiries concerning the examination or status of this application should be directed to the Technology Center.

This application is being referred to Technology Center AU 3766 for processing of the request for continued examination under 37 CFR 1.114 and for consideration of the concurrently filed information disclosure statement

/AMW/
April M. Wise
Petitions Examiner
Office of Petitions

[1] *The request to apply the issue fee to the new Notice may be satisfied by completing and returning the new Part B – Fee(s) Transmittal Form (along with any balance due at the time of submission). Petitioner is advised that the Issue Fee Transmittal Form must be completed and timely submitted to avoid abandonment of the application.*

Doc Code: PET.PTA.RCAL
Document Description: Request for Recalculation in view of Wyeth

PTO/SB/131 (01-10)
Approved for use through 02/28/2011. OMB 0651-0020
U.S. Patent and Trademark Office; U. S. DEPARTMENT OF COMMERCE
Under the Paperwork Reduction Act of 1995, no persons are required to respond to a collection of information unless it displays a valid OMB control number.

REQUEST FOR RECALCULATION OF PATENT TERM ADJUSTMENT IN VIEW OF *WYETH**

Attorney Docket Number: TI-62466	Patent Number: 7,667,441
Filing Date (or 371(b) or (f) Date): 04-25-2007	Issue Date: 02/23/2010
First Named Inventor: Vladimir Alexander Muratov	
Title: INDUCTIVE ELEMENT FOR A MULTI-PHASE INTERLEAVED POWER SUPPLY AND APPARATUS AND METHOD USING THE SAME	

PATENTEE HEREBY REQUESTS RECALCULATION OF THE PATENT TERM ADJUSTMENT (PTA) UNDER 35 USC 154(b) INDICATED ON THE ABOVE-IDENTIFIED PATENT. THE PATENTEE'S SOLE BASIS FOR REQUESTING THE RECALCULATION IS THE USPTO'S PRE-*WYETH* INTERPRETATION OF 35 U.S.C. 154(b)(2)(A).

Note: This form is only for requesting a recalculation of PTA for patents issued before March 2, 2010, if the sole basis for requesting the recalculation is the USPTO's pre-*Wyeth* interpretation of 35 U.S.C. 154(b)(2)(A). See Instruction Sheet on page 2 for more information.

Patentees are reminded that to preserve the right to review in the United States District Court for the District of Columbia of the USPTO's patent term adjustment determination, a patentee must ensure that he or she also takes the steps required under 35 U.S.C. 154(b)(3) and (b)(4) and 37 CFR 1.705 in a timely manner.

**Wyeth v. Kappos*, No. 2009-1120 (Fed. Cir., Jan. 7, 2010).

Signature / Wade J. Brady III /	Date August 12, 2010
Name (Print/Typed) Wade J. Brady III	Registration Number 32,080

***Note**: Signatures of all the inventors or assignees of record of the entire interest or their representative(s) are required in accordance with 37 CFR 1.33 and 11.18. Please see 37 CFR 1.4(d) for the form of the signature. If necessary, submit multiple forms for more than one signature, see below**.*

☑ *Total of 1 forms are submitted.

The information is required to obtain or retain a benefit by the public which is to file (and by the USPTO to process) an application. Confidentiality is governed by 35 U.S.C. 122 and 37 CFR 1.11 and 1.14. This collection is estimated to take 12 hours to complete, including gathering, preparing, and submitting the completed application form to the USPTO. Time will vary depending upon the individual case. Any comments on the amount of time you require to complete this form and/or suggestions for reducing this burden, should be sent to the Chief Information Officer, U.S. Patent and Trademark Office, U.S. Department of Commerce, P.O. Box 1450, Alexandria, VA 22313-1450. DO NOT SEND FEES OR COMPLETED FORMS TO THIS ADDRESS. **SEND TO: Commissioner for Patents, P.O. Box 1450, Alexandria, VA 22313-1450.**

If you need assistance in completing the form, call 1-800-PTO-9199 and select option 2.

UNITED STATES PATENT AND TRADEMARK OFFICE

UNITED STATES DEPARTMENT OF COMMERCE
United States Patent and Trademark Office
Address: COMMISSIONER FOR PATENTS
P.O. Box 1450
Alexandria, Virginia 22313-1450
www.uspto.gov

TEXAS INSTRUMENTS INCORPORATED
P O BOX 655474, M/S 3999
DALLAS, TX 75265

Mail Date: 08/18/2010

Applicant	: Vladimir Alexander Muratov	: DECISION ON REQUEST FOR
Patent Number	: 7667441	: RECALCULATION of PATENT
Issue Date	: 02/23/2010	: TERM ADJUSTMENT IN VIEW
Application No	: 11/789,519	: OF WYETH AND NOTICE OF INTENT TO
Filed	: 04/25/2007	: ISSUE CERTIFICATE OF CORRECTION
		:

The Request for Recalculation is **GRANTED** to the extent indicated.

The patent term adjustment has been determined to be **470** days. The USPTO will *sua sponte* issue a certificate of correction reflecting the amount of PTA days determined by the recalculation.

Prior to the issuance of the certificate of correction, the USPTO will afford patentee an opportunity to be heard and request reconsideration. Accordingly, patentee has **one month or thirty (30) days**, whichever is longer, to file a request for reconsideration of this patent term adjustment calculation. See 35 U.S.C. 154(b)(3)(B)(ii) and 37 CFR 1.322(a)(4). No extensions of time will be granted under 37 CFR 1.136.

Patentee should use document code PET.OP if electronically filing a request for reconsideration of this patent term adjustment calculation. The patentee must also include the information required by 37 CFR 1.705(b)(2) and the fee required by 37 CFR 1.18(e). If patentee does not file a timely request for reconsideration of this patent term adjustment calculation including the information required by 37 CFR 1.705(b)(2) and the fee required by 37 CFR 1.18(e), the USPTO will issue a certificate of correction reflecting the PTA determination noted above.

Patentee should be aware that in order to preserve the right to review in the United States District Court for the District of Columbia of the USPTO patent term adjustment determination, patentee must ensure that he or she also take the steps required under 35 U.S.C. 154(b)(4)(A) in a timely manner. Nothing in the request for recalculation should be construed as providing an alternative time frame for commencing a civil action under 35 U.S.C. 154(b)(4)(A).

Any questions concerning this decision should be directed to the Office of Patent Legal Administration at 571-272-7702.

UNITED STATES PATENT AND TRADEMARK OFFICE

Commissioner for Patents
United States Patent and Trademark Office
P.O. Box 1450
Alexandria, VA 22313-1450
www.uspto.gov

MAILED
JAN 11 2012
OFFICE OF PETITIONS

BRENTWOOD REID
PO BOX 2461
HOMER AK 99603

In re Application of	:	
Reid et al	:	
Application No. 11/789,534	:	DECISION ON REQUEST FOR REFUND
Filed: April 25, 2007	:	
For: CARGO CAGE FOR AN	:	
AUTOMOBILE	:	

This is a decision on the Request For Refund filed December 23, 2011.

The request is **DISMISSED**.

Applicants request a refund of $1945.00 and states that " ... On 5-16-2007 a response to notice of missing parts was filed but it was filed late. On 11-19-2007 a request for a 5 month extension was filed including a fee of $820.00 but this was filed late. On 2-01-2008 a request for a 6 month extension was filed including a fee of $1125. This was also filed late and the extension was denied and the application was considered abandoned."

The request for refund was filed on December 23, 2011, which is not within two years of the date the above fees were paid as required by 37 CFR 1.26(b). Also, the Office finance records show that an extension fee of $295.00 was paid on February 1, 2008 and not the $1125 as applicants indicated above.

In view of the above, the request for refund is dismissed.

Any questions concerning this matter may be directed to the undersigned at (571) 272-3208.

/KOC/
Karen Creasy
Petitions Examiner
Office of Petitions

SPE RESPONSE FOR CERTIFICATE OF CORRECTION

Paper No.: _____

DATE : 10/14/00

TO SPE OF : ART UNIT 2878

SUBJECT : Request for Certificate of Correction for Appl. No.: 11/789,555

Patent No.: 7429744

Please respond to this request for a certificate of correction within 7 days.

FOR IFW FILES:

Please review the requested changes/corrections as shown in the **COCIN** document(s) in the IFW application image. No new matter should be introduced, nor should the scope or meaning of the claims be changed.

Please complete the response (see below) and forward the completed response to scanning using document code **COCX**.

FOR PAPER FILES:

Please review the requested changes/corrections as shown in the attached certificate of correction. Please complete this form (see below) and forward it with the file to:

Certificates of Correction Branch (CofC)
Randolph Square – 9D10-A
Palm Location 7580

Thank You For Your Assistance

The request for issuing the above-identified correction(s) is hereby:

Note your decision on the appropriate box.

- ☑ **Approved** — **All** changes apply.
- ☐ **Approved in Part** — Specify below which changes **do not** apply.
- ☐ **Denied** — State the reasons for denial below.

_____

_____

_____

SPE Georgia Y Epps **ART UNIT** 2878

PTO/SB/44 (09-07)
Approved for use through 08/31/2010. OMB 0651-0033
U.S. Patent and Trademark Office; U.S. DEPARTMENT OF COMMERCE
Under the Paperwork Reduction Act of 1995, no persons are required to respond to a collection of information unless it displays a valid OMB control number.
(Also Form PTO-1050)

UNITED STATES PATENT AND TRADEMARK OFFICE
CERTIFICATE OF CORRECTION

PATENT NO. : 7,429,744

APPLICATION NO.: 11/789,555

ISSUE DATE : Sep. 30, 2008

INVENTOR(S) : Jiin Cheang Cheong, et al.

It is certified that an error appears or errors appear in the above-identified patent and that said Letters Patent is hereby corrected as shown below:

Column 4, Line 37-38, Claim 17, delete
"17. A print system comprising:
a print mechanism configured to deposit ink on a media;
and
a media recognition system in communication with the print mechanism;
the media recognition system comprising:
a light source arranged to illuminate the media;
a specular light detector configured to generate an intensity signal representative of a detected specular reflectance received from the illuminated media;
and
a recognition map configured to cross-reference the intensity signal to a media type based on a comparison of the detected specular reflectance and a media type specular reflectance."

and insert - - 17. A print system comprising:
a print mechanism configured to deposit ink on a media;
and
a media recognition system in communication with the print mechanism;
the media recognition system comprising:
a light source arranged to illuminate the media;
a specular light detector configured to generate an intensity signal representative of a detected specular reflectance received from the illuminated media;
and
a recognition map configured to cross-reference the intensity signal to a media type based on a comparison of the detected specular reflectance and a media type specular reflectance. - -;

MAILING ADDRESS OF SENDER (Please do not use customer number below):

Avago Technologies Limited
4380 Ziegler Road, MS: 76
Fort Collins, CO 80525

This collection of information is required by 37 CFR 1.322, 1.323, and 1.324. The information is required to obtain or retain a benefit by the public which is to file (and by the USPTO to process) an application. Confidentiality is governed by 35 U.S.C. 122 and 37 CFR 1.14. This collection is estimated to take 1.0 hour to complete, including gathering, preparing, and submitting the completed application form to the USPTO. Time will vary depending upon the individual case. Any comments on the amount of time you require to complete this form and/or suggestions for reducing this burden, should be sent to the Chief Information Officer, U.S. Patent and Trademark Office, U.S. Department of Commerce, P.O. Box 1450, Alexandria, VA 22313-1450. DO NOT SEND FEES OR COMPLETED FORMS TO THIS ADDRESS. SEND TO: **Attention Certificate of Corrections Branch, Commissioner for Patents, P.O. Box 1450, Alexandria, VA 22313-1450.**

If you need assistance in completing the form, call 1-800-PTO-9199 and select option 2.

PTO/SB/44 (09-07)
Approved for use through 08/31/2010. OMB 0651-0033
U.S. Patent and Trademark Office; U.S. DEPARTMENT OF COMMERCE
Under the Paperwork Reduction Act of 1995, no persons are required to respond to a collection of information unless it displays a valid OMB control number.
(Also Form PTO-1050)

UNITED STATES PATENT AND TRADEMARK OFFICE
CERTIFICATE OF CORRECTION

PATENT NO. : 7,429,744

APPLICATION NO.: 11/789,555

ISSUE DATE : Sep. 30, 2008

INVENTOR(S) : Jiin Cheang Cheong, et al.

It is certified that an error appears or errors appear in the above-identified patent and that said Letters Patent is hereby corrected as shown below:

Column 4, Line 63, Claim 23, delete "of" and insert - - on - -;

Column 5, Line 10, Claim 26, delete "light emitting" and insert - - light-emitting - -.

MAILING ADDRESS OF SENDER (Please do not use customer number below):

Avago Technologies Limited
4380 Ziegler Road, MS: 76
Fort Collins, CO 80525

This collection of information is required by 37 CFR 1.322, 1.323, and 1.324. The information is required to obtain or retain a benefit by the public which is to file (and by the USPTO to process) an application. Confidentiality is governed by 35 U.S.C. 122 and 37 CFR 1.14. This collection is estimated to take 1.0 hour to complete, including gathering, preparing, and submitting the completed application form to the USPTO. Time will vary depending upon the individual case. Any comments on the amount of time you require to complete this form and/or suggestions for reducing this burden, should be sent to the Chief Information Officer, U.S. Patent and Trademark Office, U.S. Department of Commerce, P.O. Box 1450, Alexandria, VA 22313-1450. DO NOT SEND FEES OR COMPLETED FORMS TO THIS ADDRESS. SEND TO: **Attention Certificate of Corrections Branch, Commissioner for Patents, P.O. Box 1450, Alexandria, VA 22313-1450.**

If you need assistance in completing the form, call 1-800-PTO-9199 and select option 2.

UNITED STATES PATENT AND TRADEMARK OFFICE

Commissioner for Patents
United States Patent and Trademark Office
P.O. Box 1450
Alexandria, VA 22313-1450
www.uspto.gov

MAILED
JUL 27 2011
OFFICE OF PETITIONS

AKERMAN SENTERFITT
P.O. BOX 3188
WEST PALM BEACH FL 33402-3188

In re Application of	:	
June MEDFORD, et al	:	
Application No. 11/789,560	:	DECISION ON PETITION
Filed: April 25, 2007	:	TO WITHDRAW
Attorney Docket No.	:	FROM RECORD
	:	

This is a decision on the Request to Withdraw as attorney or agent of record under 37 C.F.R. § 1.36(b), filed March 23, 2011.

The request is **APPROVED**.

A grantable request to withdraw as attorney/agent of record must be signed by every attorney/agent seeking to withdraw or contain a clear indication that one attorney is signing on behalf of another/others. The Office requires the practitioner(s) requesting withdrawal to certify that he, she, or they have: (1) given reasonable notice to the client, prior to the expiration of the response period, that the practitioner(s) intends to withdraw from employment; (2) delivered to the client or a duly authorized representative of the client all papers and property (including funds) to which the client is entitled; and (3) notified the client of any responses that may be due and the time frame within which the client must respond, pursuant 37 CFR 10.40(c).

The request was signed by John E. Burke on.behalf of the attorneys of record associated with Customer No. 30448.

The attorneys of record associated with Customer No. 30448 have been withdrawn.

Applicant is reminded that there is no attorney of record at this time.

The correspondence address of record has been changed and the new correspondence address is the address indicated below until otherwise properly notified by the applicant.

Telephone inquiries concerning this decision should be directed to the undersigned at (571) 272-6735.

/Diane C. Goodwyn/
Diane C. Goodwyn
Petitions Examiner
Office of Petitions

cc: JUNE MEDFORD
1331 CAPE COD CIRCLE
FORT COLLINS, CO 80525

UNITED STATES PATENT AND TRADEMARK OFFICE

UNITED STATES DEPARTMENT OF COMMERCE
United States Patent and Trademark Office
Address: COMMISSIONER FOR PATENTS
P.O. Box 1450
Alexandria, Virginia 22313-1450
www.uspto.gov

APPLICATION NUMBER	FILING OR 371(C) DATE	FIRST NAMED APPLICANT	ATTY. DOCKET NO./TITLE
11/789,560	04/25/2007	June Medford	

CONFIRMATION NO. 9426

POWER OF ATTORNEY NOTICE

30448
AKERMAN SENTERFITT
P.O. BOX 3188
WEST PALM BEACH, FL 33402-3188

OC000000048983235

Date Mailed: 07/27/2011

NOTICE REGARDING CHANGE OF POWER OF ATTORNEY

This is in response to the Power of Attorney filed 03/23/2011.

- The withdrawal as attorney in this application has been accepted. Future correspondence will be mailed to the new address of record. 37 CFR 1.33.

/dcgoodwyn/

Office of Data Management, Application Assistance Unit (571) 272-4000, or (571) 272-4200, or 1-888-786-0101

UNITED STATES PATENT AND TRADEMARK OFFICE

Commissioner for Patents
United States Patent and Trademark Office
P.O. Box 1450
Alexandria, VA 22313-1450
www.uspto.gov

MAILED
DEC 07 2010
OFFICE OF PETITIONS

WILMERHALE/COLUMBIA UNIVERSITY
399 PARK AVENUE
NEW YORK NY 10022

In re Application of	:	
Xi Long et al	:	
Application No. 11/789,571	:	DECISION DISMISSING PETITION
Filed: April 25, 2007	:	UNDER 37 CFR 1.78(a)(3) AND (a)(6)
Attorney Docket No. 19240.526US2	:	

This is a decision on the petition under 37 CFR §§ 1.78(a)(3) and 1.78(a)(6), filed December 3, 2010, to accept an unintentionally delayed claim under 35 U.S.C. §§ 120 and 119(e) for the benefit of priority to the prior-filed nonprovisional and provisional applications set forth in the concurrently filed amendment and Application Data Sheet (ADS).

The petition is **DISMISSED**

A petition for acceptance of a claim for late priority under 37 CFR §§ 1.78(a)(3) and 1.78(a)(6) is only applicable to those applications filed on or after November 29, 2000 and after the expiration of the period specified in 37 CFR §§ 1.78(a)(2)(ii) and 1.78(a)(5)(ii). In addition, the petition under 37 CFR §§ 1.78(a)(3) and 1.78(a)(6) must be accompanied by:

(1) the reference required by 35 U.S.C. §§ 120 and 119(e) and 37 CFR §§ 1.78(a)(2)(i) and 1.78(a)(5)(i) of the prior-filed application, unless previously submitted;
(2) the surcharge set forth in § 1.17(t); and
(3) a statement that the entire delay between the date the claim was due under 37 CFR §§ 1.78(a)(2)(ii) and 1.78(a)(5)(ii) and the date the claim was filed was unintentional. The Director may require additional where there is a question whether the delay was unintentional.

The petition does not comply with item (1).

The amendment is not acceptable as drafted since it improperly incorporates by reference the prior-filed application. An incorporation by reference statement added after an application's filing date is not effective because no new matter can be added to an application after its filing date (*see* 35 U.S.C. § 132(a)). If an incorporation by reference statement is included in an amendment to the specification to add a benefit claim under 35 U.S.C. § 120 after the filing date of the application, the amendment would not be proper. When a benefit claim under 35 U.S.C. § 120 is submitted after the filing of an application, the reference to the prior application cannot include an incorporation by reference statement of the prior application. *See* Dart Industries v. Banner, 636 F.2d 684, 207 USPQ 273 (C.A.D.C. 1980). *Note* MPEP §§ 201.06(c) and 608.04(b).

Before the petition under 37 CFR §§ 1.78(a)(3) and 1.78(a)(6) can be granted, a renewed petition and a substitute amendment deleting the incorporation by reference statement to PCT application number PCT/US2005/040905 are required.

Further correspondence with respect to this matter should be delivered through one of the following mediums:

By mail: Mail Stop PETITIONS
Commissioner for Patents
Post Office Box 1450
Alexandria, VA 22313-1450

By hand: Customer Service Window
Mail Stop Petitions
Randolph Building
401 Dulany Street
Alexandria, VA 22314

By fax: (571) 273-8300
ATTN: Office of Petitions

By internet: EFS-Web
www.uspto.gov/ebc/efs_help.html
(for help using EFS-Web call the Patent Electronic Business Center at (866) 217-9197)

Any questions concerning this matter may be directed to the undersigned at (571) 272-3208.

/KOC/
Karen Creasy
Petitions Examiner
Office of Petitions

UNITED STATES PATENT AND TRADEMARK OFFICE

Commissioner for Patents
United States Patent and Trademark Office
P.O. Box 1450
Alexandria, VA 22313-1450
www.uspto.gov

WILMERHALE/COLUMBIA UNIVERSITY
399 PARK AVENUE
NEW YORK NY 10022

MAILED
DEC 06 2010
OFFICE OF PETITIONS

In re Application of	:	
Xi Long et al	:	
Application No. 11/789,571	:	DECISION GRANTING PETITION
Filed: April 25, 2007	:	UNDER 37 CFR 1.313(c)(2)
Attorney Docket No. 19240:526US2	:	

This is a decision on the petition under 37 CFR 1.313(c)(2), filed December 3, 2010, to withdraw the above-identified application from issue after payment of the issue fee.

The petition is **GRANTED**.

The above-identified application is withdrawn from issue for consideration of a submission under 37 CFR 1.114 (request for continued examination). *See* 37 CFR 1.313(c)(2).

Petitioner is advised that the issue fee paid on November 10, 2010 cannot be refunded. If, however, this application is again allowed, petitioner may request that it be applied towards the issue fee required by the new Notice of Allowance.[1]

Telephone inquiries should be directed to the undersigned at (571) 272-3208.

This application is being referred to Technology Center AU 2129 for processing of the request for continued examination under 37 CFR 1.114. The petition under 37 CFR 1.78(a)(3) and (a)(6) will be considered by the Office of petitions.

/Karen Creasy/
Karen Creasy
Petitions Examiner
Office of Petitions

[1] *The request to apply the issue fee to the new Notice may be satisfied by completing and returning the new Part B – Fee(s) Transmittal Form (along with any balance due at the time of submission). Petitioner is advised that the Issue Fee Transmittal Form must be completed and timely submitted to avoid abandonment of the application.*

UNITED STATES PATENT AND TRADEMARK OFFICE

Commissioner for Patents
United States Patent and Trademark Office
P.O. Box 1450
Alexandria, VA 22313-1450
www.uspto.gov

WILMERHALE/COLUMBIA UNIVERSITY
399 PARK AVENUE
NEW YORK NY 10022

MAILED
JAN 04 2011
OFFICE OF PETITIONS

In re Application of
Xi Long et al
Application No. 11/789,571
Filed: April 25, 2007
Attorney Docket No. 19240.526US2

DECISION ON PETITION
UNDER 37 CFR 1.78(a)(3) AND (a)(6)

This is a supplemental decision on the petition under 37 CFR §§ 1.78(a)(3) and 1.78(a)(6), filed December 3, 2010, to accept an unintentionally delayed claim under 35 U.S.C. §§120, 365(c) and §119(e) for the benefit of the prior-filed applications set forth in the concurrently filed amendment.

Upon further review of the above matter, the petition is **GRANTED.**

A petition for acceptance of a claim for late priority under 37 CFR §§ 1.78(a)(3) and 1.78(a)(6) is only applicable to those applications filed on or after November 29, 2000. Further, the petition is appropriate only after the expiration of the period specified in 37 CFR §§ 1.78(a)(2)(ii) and 1.78(a)(5)(ii). In addition, the petition under 37 CFR §§ 1.78(a)(3) and 1.78(a)(6) must be accompanied by:

(1) the reference required by 35 U.S.C. §§ 120 and 119(e) and 37 CFR §§ 1.78(a)(2)(i) and 1.78(a)(5)(i) of the prior-filed application, unless previously submitted;
(2) the surcharge set forth in § 1.17(t); and
(3) a statement that the entire delay between the date the claim was due under 37 CFR §§ 1.78(a)(2)(ii) and 1.78(a)(5)(ii) and the date the claim was filed was unintentional. The Director may require additional information where there is a question whether the delay was unintentional.

Additionally, the instant nonprovisional application must be pending at the time of filing of the reference to the prior-filed provisional application as required by 37 CFR 1.78(a)(5)(ii). Further, the nonprovisional application claiming the benefit of the prior-filed provisional application must have been filed within twelve months of the filing date of the prior-filed provisional application. All the above requirements having been satisfied, the late claim for benefit of priority under 35 U.S.C. §§ 120, 365(c) and §119(e) is accepted as being unintentionally delayed.

The granting of the petition to accept the delayed benefit claim to the prior-filed applications under 37 CFR §§ 1.78(a)(3) and 1.78(a)(6) should not be construed as meaning that this application is entitled to the benefit of the filing date of the prior-filed applications. In order for this application to be entitled to the benefit of the prior-filed applications, all other requirements under 35 U.S.C. §§120 and 1.78(a)(1) and (a)(2) and under 35 U.S.C. §119(e) and 37 CFR 1.78(a)(4) and (a)(5) must be met. Similarly, the fact that the corrected Filing Receipt accompanying this decision on petition includes the prior-filed applications should not be construed as meaning that applicant is entitled to the claim for benefit of priority to the prior-filed applications noted thereon. Accordingly, the examiner will, in due course, consider this benefit claim and determine whether the application is entitled to the benefit of the earlier filing date.

A corrected Filing Receipt, which includes the priority claim to the prior-filed applications, accompanies this decision on petition.

Any questions concerning this matter may be directed to the undersigned at (571) 272-3208. All other inquiries concerning either the examination procedures or status of the application should be directed to the Technology Center.

This application is being forwarded to Technology Center Art Unit 2129 for consideration by the examiner of the claim under 35 U.S.C. § §120, 365(c) and §119(e) of the prior-filed nonprovisional and provisional applications.

/KOC/
Karen Creasy
Petitions Examiner
Office of Petitions

ATTACHMENT : Corrected Filing Receipt

UNITED STATES PATENT AND TRADEMARK OFFICE

UNITED STATES DEPARTMENT OF COMMERCE
United States Patent and Trademark Office
Address: COMMISSIONER FOR PATENTS
P.O. Box 1450
Alexandria, Virginia 22313-1450
www.uspto.gov

APPLICATION NUMBER	FILING or 371(c) DATE	GRP ART UNIT	FIL FEE REC'D	ATTY.DOCKET.NO	TOT CLAIMS	IND CLAIMS
11/789,571	04/25/2007	2129	2515	19240.526US2	40	12

CONFIRMATION NO. 9260

CORRECTED FILING RECEIPT

56949
WilmerHale/Columbia University
399 PARK AVENUE
NEW YORK, NY 10022

OC000000045112157

Date Mailed: 12/23/2010

Receipt is acknowledged of this non-provisional patent application. The application will be taken up for examination in due course. Applicant will be notified as to the results of the examination. Any correspondence concerning the application must include the following identification information: the U.S. APPLICATION NUMBER, FILING DATE, NAME OF APPLICANT, and TITLE OF INVENTION. Fees transmitted by check or draft are subject to collection. Please verify the accuracy of the data presented on this receipt. **If an error is noted on this Filing Receipt, please submit a written request for a Filing Receipt Correction. Please provide a copy of this Filing Receipt with the changes noted thereon. If you received a "Notice to File Missing Parts" for this application, please submit any corrections to this Filing Receipt with your reply to the Notice. When the USPTO processes the reply to the Notice, the USPTO will generate another Filing Receipt incorporating the requested corrections**

Applicant(s)

Xi Long, Seattle, WA;
W. Louis Cleveland, New York, NY;
Y. Lawrence Yao, New York, NY;

Assignment For Published Patent Application

The Trustees of Columbia University in the City of New York, New York, NY

Power of Attorney: None

Domestic Priority data as claimed by applicant

This application is a CON of PCT/US2005/040905 11/10/2005
which claims benefit of 60/627,465 11/11/2004
This application 11/789,571
claims benefit of 60/795,210 04/25/2006

Foreign Applications

If Required, Foreign Filing License Granted: 05/21/2007

The country code and number of your priority application, to be used for filing abroad under the Paris Convention, is **US 11/789,571**

Projected Publication Date: Not Applicable

Non-Publication Request: No

Early Publication Request: No
**** SMALL ENTITY ****

Title

METHODS AND SYSTEMS FOR IDENTIFYING AND LOCALIZING OBJECTS BASED ON FEATURES OF THE OBJECTS THAT ARE MAPPED TO A VECTOR

Preliminary Class

706

PROTECTING YOUR INVENTION OUTSIDE THE UNITED STATES

Since the rights granted by a U.S. patent extend only throughout the territory of the United States and have no effect in a foreign country, an inventor who wishes patent protection in another country must apply for a patent in a specific country or in regional patent offices. Applicants may wish to consider the filing of an international application under the Patent Cooperation Treaty (PCT). An international (PCT) application generally has the same effect as a regular national patent application in each PCT-member country. The PCT process **simplifies** the filing of patent applications on the same invention in member countries, but **does not result** in a grant of "an international patent" and does not eliminate the need of applicants to file additional documents and fees in countries where patent protection is desired.

Almost every country has its own patent law, and a person desiring a patent in a particular country must make an application for patent in that country in accordance with its particular laws. Since the laws of many countries differ in various respects from the patent law of the United States, applicants are advised to seek guidance from specific foreign countries to ensure that patent rights are not lost prematurely.

Applicants also are advised that in the case of inventions made in the United States, the Director of the USPTO must issue a license before applicants can apply for a patent in a foreign country. The filing of a U.S. patent application serves as a request for a foreign filing license. The application's filing receipt contains further information and guidance as to the status of applicant's license for foreign filing.

Applicants may wish to consult the USPTO booklet, "General Information Concerning Patents" (specifically, the section entitled "Treaties and Foreign Patents") for more information on timeframes and deadlines for filing foreign patent applications. The guide is available either by contacting the USPTO Contact Center at 800-786-9199, or it can be viewed on the USPTO website at http://www.uspto.gov/web/offices/pac/doc/general/index.html.

For information on preventing theft of your intellectual property (patents, trademarks and copyrights), you may wish to consult the U.S. Government website, http://www.stopfakes.gov. Part of a Department of Commerce initiative, this website includes self-help "toolkits" giving innovators guidance on how to protect intellectual property in specific countries such as China, Korea and Mexico. For questions regarding patent enforcement issues, applicants may call the U.S. Government hotline at 1-866-999-HALT (1-866-999-4158).

LICENSE FOR FOREIGN FILING UNDER

Title 35, United States Code, Section 184

Title 37, Code of Federal Regulations, 5.11 & 5.15

GRANTED

The applicant has been granted a license under 35 U.S.C. 184, if the phrase "IF REQUIRED, FOREIGN FILING LICENSE GRANTED" followed by a date appears on this form. Such licenses are issued in all applications where

the conditions for issuance of a license have been met, regardless of whether or not a license may be required as set forth in 37 CFR 5.15. The scope and limitations of this license are set forth in 37 CFR 5.15(a) unless an earlier license has been issued under 37 CFR 5.15(b). The license is subject to revocation upon written notification. The date indicated is the effective date of the license, unless an earlier license of similar scope has been granted under 37 CFR 5.13 or 5.14.

This license is to be retained by the licensee and may be used at any time on or after the effective date thereof unless it is revoked. This license is automatically transferred to any related applications(s) filed under 37 CFR 1.53(d). This license is not retroactive.

The grant of a license does not in any way lessen the responsibility of a licensee for the security of the subject matter as imposed by any Government contract or the provisions of existing laws relating to espionage and the national security or the export of technical data. Licensees should apprise themselves of current regulations especially with respect to certain countries, of other agencies, particularly the Office of Defense Trade Controls, Department of State (with respect to Arms, Munitions and Implements of War (22 CFR 121-128)); the Bureau of Industry and Security, Department of Commerce (15 CFR parts 730-774); the Office of Foreign AssetsControl, Department of Treasury (31 CFR Parts 500+) and the Department of Energy.

NOT GRANTED

No license under 35 U.S.C. 184 has been granted at this time, if the phrase "IF REQUIRED, FOREIGN FILING LICENSE GRANTED" DOES NOT appear on this form. Applicant may still petition for a license under 37 CFR 5.12, if a license is desired before the expiration of 6 months from the filing date of the application. If 6 months has lapsed from the filing date of this application and the licensee has not received any indication of a secrecy order under 35 U.S.C. 181, the licensee may foreign file the application pursuant to 37 CFR 5.15(b).

UNITED STATES PATENT AND TRADEMARK OFFICE

Commissioner for Patents
United States Patent and Trademark Office
P.O. Box 1450
Alexandria, VA 22313-1450
www.uspto.gov

Paper No.

Diego Linares
4614 E. Calle Corta
Tucson AZ 85712

MAILED
DEC 13 2010
OFFICE OF PETITIONS

In re Application of	:	
Diego Linares	:	
Application No. 11/789,588	:	DECISION ON PETITION
Filed: April 25, 2007	:	PURSUANT TO
Title: PLANETARY IMPROVEMENT	:	37 C.F.R. § 1.137(B)
MOTOR	:	

This is a decision on the petition pursuant to 37 C.F.R. § 1.137(b), filed April 28, 2010, to revive the above-identified application.

This petition pursuant to 37 C.F.R. § 1.137(b) is **DISMISSED.**

The above-identified application became abandoned for failure to file a proper response to the Restriction Requirement, mailed September 22, 2009, which set a shortened statutory period to reply of one month. No response was received, and no extensions of time under the provisions of 37 C.F.R. § 1.136(a) were obtained. Accordingly, the above-identified application became abandoned on October 23, 2009. A Notice of abandonment was mailed on April 14, 2010.

A grantable petition pursuant to 37 C.F.R. § 1.137(b) must be accompanied by:

(1) The reply required to the outstanding Office action or notice, unless previously filed;
(2) The petition fee as set forth in 37 C.F.R. § 1.17(m);
(3) A statement that the entire delay in filing the required reply from the due date for the reply until the filing of a grantable petition pursuant to this paragraph was unintentional. The Commissioner may require additional information where there is a question whether the delay was

unintentional, and;

(4) Any terminal disclaimer (and fee as set forth in 37 C.F.R. § 1.20(d)) required pursuant to paragraph (d) of this section.

Petition fee requirement: the fee for filing a petition to revive an unintentionally abandoned application under 37 C.F.R. § 1.137(b) is set forth in 37 C.F.R. § 1.17(m) as currently being $1620 for a large entity and $810 for a small entity. Petitioner included $5 towards this petition fee. As such, **$805 is due.** Moreover, a general authorization to charge any fee deficiencies to a Deposit Account has not been located in the electronic file.

The payment of the required petition fee in full is a prerequisite to the filing of a petition to revive pursuant to 37 C.F.R. § 1.137. Therefore, consideration of the merits of the petition before receipt of the filing fee would be premature. See M.P.E.P. § 711.03(c)(III)(B), which sets forth, *in toto*:

> 35 U.S.C. 41(a)(7) provides that a petition for the revival of an unintentionally abandoned application or for the unintentionally delayed payment of the issue fee must be accompanied by the petition fee set forth in 37 CFR 1.17(m), unless the petition is filed under 35 U.S.C. 133 or 151 (on the basis of unavoidable delay), in which case the fee is set forth in 37 CFR 1.17(l). Thus, unless the circumstances warrant the withdrawal of the holding of abandonment (i.e., it is determined that the application is not properly held abandoned), **the payment of a petition fee to obtain the revival of an abandoned application is a statutory prerequisite to revival of the abandoned application, and cannot be waived** (emphasis added).
>
> In addition, the phrase "[o]n filing" in 35 U.S.C. 41(a)(7) means that the petition fee is required for the filing (and not merely the grant) of a petition under 37 CFR 1.137. See H.R. Rep. No. 542, 97th Cong., 2d Sess. 6 (1982), reprinted in 1982 U.S.C.C.A.N. 770 ("[t]he fees set forth in this section are due on filing the petition"). Therefore, the Office: (A) will not refund the petition fee required by 37 CFR 1.17(l) or 1.17(m), regardless of whether the petition under 37 CFR 1.137 is dismissed or denied; and (B) will not reach the merits of any petition under 37 CFR 1.137 lacking the requisite petition fee.
>
> The phrase "unless the petition is filed under [35 U.S.C.] 133 or 151" signifies that petitions to revive filed on the basis of "unavoidable" delay (under 35 U.S.C. 133 or 151) are a subset of petitions to revive filed on the basis of unintentional delay. That is, "unavoidable" delay and "unintentional" delay are not alternatives; "unavoidable" delay is the epitome of "unintentional" delay. Any petition to revive an abandoned application or lapsed patent must meet the minimal "unintentional" delay threshold, and an applicant need only pay

> the fee specified in 37 CFR 1.17(l) (rather than the fee specified in 37 CFR 1.17(m)) if the petition is also accompanied by an adequate showing that the entire delay in filing the required reply, from the due date for the reply until the filing of a grantable petition pursuant to 37 CFR 1.137(a), was unavoidable.

If reconsideration of this decision is desired, any response to this decision must be submitted within **TWO MONTHS** from the mail date of this decision. Extensions of time under 37 C.F.R. § 1.136(a) are permitted. The reply should include a cover letter entitled "Renewed Petition pursuant to 37 C.F.R. § 1.137(b)". This is not a final agency action within the meaning of 5 U.S.C § 704. **Petitioner should include $805**.

Any subsequent filing pertaining to the abandonment of this application should indicate that the attorney handling this matter is Paul Shanoski, and may be submitted by mail,[1] hand-delivery,[2] or facsimile.[3] Registered users of EFS-Web may alternatively submit a response to this decision via EFS-Web.[4]

If responding by mail, Petitioner is advised not to place the undersigned's name on the envelope. Only the information that appears in the footnote should be included - adding anything else to the address will delay the delivery of the response to the undersigned.

Telephone inquiries regarding this decision should be directed to the undersigned at (571) 272-3225.[5] All other inquiries concerning examination procedures or status of the application should be directed to the Technology Center.

/Paul Shanoski/
Paul Shanoski
Senior Attorney
Office of Petitions

---

1 Mail Stop Petition, Commissioner for Patents, United States Patent and Trademark Office, P.O. Box 1450, Alexandria, VA, 22313-1450.
2 Customer Window, Randolph Building, 401 Dulaney Street, Alexandria, VA, 22314.
3 (571) 273-8300- please note this is a central facsimile number.
4 https://sportal.uspto.gov/authenticate/authenticateuserlocalepf.html
5 Petitioner will note that all practice before the Office should be in writing, and the action of the Office will be based exclusively on the written record in the Office. See 37 C.F.R. § 1.2. As such, Petitioner is reminded that no telephone discussion may be controlling or considered authority for any of Petitioner's further action(s).

UNITED STATES PATENT AND TRADEMARK OFFICE

Commissioner for Patents
United States Patent and Trademark Office
P.O. Box 1450
Alexandria, VA 22313-1450
www.uspto.gov

Paper No.

MAILED
JUN 03 2011
OFFICE OF PETITIONS

Diego Linares
4614 E. Calle Corta
Tucson AZ 85712

In re Application of	:	
Diego Linares	:	
Application No. 11/789,588	:	DECISION ON RENEWED PETITION
Filed: April 25, 2007	:	PURSUANT TO
Title: PLANETARY IMPROVEMENT	:	37 C.F.R. § 1.137(B)
MOTOR	:	

This is a decision on the renewed petition pursuant to 37 C.F.R. § 1.137(b), filed February 10, 2011, to revive the above-identified application.

This renewed petition pursuant to 37 C.F.R. § 1.137(b) is **GRANTED.**

The above-identified application became abandoned for failure to file a proper response to the Restriction Requirement, mailed September 22, 2009, which set a shortened statutory period to reply of one month. No response was received, and no extensions of time under the provisions of 37 C.F.R. § 1.136(a) were obtained. Accordingly, the above-identified application became abandoned on October 23, 2009. A Notice of abandonment was mailed on April 14, 2010.

A grantable petition pursuant to 37 C.F.R. § 1.137(b) must be accompanied by:

(1) The reply required to the outstanding Office action or notice, unless previously filed;
(2) The petition fee as set forth in 37 C.F.R. § 1.17(m);
(3) A statement that the entire delay in filing the required reply from the due date for the reply until the filing of a grantable petition pursuant to this paragraph was unintentional. The Commissioner may require additional information

where there is a question whether the delay was unintentional, and;

(4) Any terminal disclaimer (and fee as set forth in 37 C.F.R. § 1.20(d)) required pursuant to paragraph (d) of this section.

An original petition pursuant to 37 C.F.R. § 1.137(b) was filed on April 28, 2010, and was dismissed via the mailing of a decision on December 13, 2010, which indicated that the petition fee had not been submitted in full: Petitioner submitted $5 when $810 was due.

With this renewed petition, Petitioner has submitted the petition fee. It is noted that an election of species was submitted on April 28, 2010.

37 C.F.R. § 1.137(b)(3) requires a statement that the entire delay in filing the required reply from the due date for the reply until the filing of a grantable petition pursuant to 37 C.F.R. § 1.137(b) was unintentional. Since the statement contained in both the original petition and this renewed petition varies from the language required by 37 C.F.R. § 1.137(b)(3), the statements contained in these petitions are being construed as the statement required by 37 C.F.R. § 1.137(b)(3) and Petitioner must notify the Office if this is not a correct interpretation of the statements contained in these two petitions.

As such, the first three requirements of Rule 1.137(b) have been met. The fourth requirement of Rule 1.137(b) is not applicable, as a terminal disclaimer is not required.[1]

The Technology Center will be notified of this decision. The Technology Center's support staff will notify the Examiner of this decision, so that the election of species that was received on April 28, 2010 can be processed in due course.

Petitioner may find it beneficial to view Private PAIR within a fortnight of the present decision to ensure that the revival has been acknowledged by the Technology Center in response to this decision. It is noted that all inquiries with regard to any failure of that change in status should be directed to the Technology Center where that change of status must be effected - **the Office of Petitions cannot effectuate a change of status.**

---

1 See Rule 1.137(d). The terminal disclaimer that was submitted on April 28, 2010 has not been entered, as the associated fee has not been submitted to the Office.

Telephone inquiries regarding *this decision* should be directed to the undersigned at (571) 272-3225.[2] All other inquiries concerning examination procedures or status of the application should be directed to the Technology Center.

/Paul Shanoski/
Paul Shanoski
Senior Attorney
Office of Petitions

---

2 Petitioner will note that all practice before the Office should be in writing, and the action of the Office will be based exclusively on the written record in the Office. See 37 C.F.R. § 1.2. As such, Petitioner is reminded that no telephone discussion may be controlling or considered authority for Petitioner's further action(s).

UNITED STATES PATENT AND TRADEMARK OFFICE

UNITED STATES DEPARTMENT OF COMMERCE
United States Patent and Trademark Office
Address: COMMISSIONER FOR PATENTS
P.O. Box 1450
Alexandria, Virginia 22313-1450
www.uspto.gov

APPLICATION NO.	FILING DATE	FIRST NAMED INVENTOR	ATTORNEY DOCKET NO.	CONFIRMATION NO.
11/789,657	04/25/2007	J. Richard Hanna	D-1116 R1 CIP DIV	9882

28995 7590 10/04/2011
RALPH E. JOCKE
Walker & Jocke
231 SOUTH BROADWAY
MEDINA, OH 44256

EXAMINER
KRAMER, JAMES A

ART UNIT	PAPER NUMBER
3693	

MAIL DATE	DELIVERY MODE
10/04/2011	PAPER

Please find below and/or attached an Office communication concerning this application or proceeding.

The time period for reply, if any, is set in the attached communication.

UNITED STATES PATENT AND TRADEMARK OFFICE

Commissioner for Patents
United States Patent and Trademark Office
P.O. Box 1450
Alexandria, VA 22313-1450
www.uspto.gov

OCT 0 4 2011

RALPH E. JOCKE
WALKER AND JOCKE
231 SOUTH BROADWAY
MEDINA, OH 44256

In re Application of Hanna, et al. Application No. 11/789,657 Filed: April, 25, 2007 For: REMOTE COMMUNICATION OF DEPOSIT DATA FROM DEPOSIT BAG RFID TAG TO DEPOSITORY	: : : : : : :	DECISION ON THE PETITION TO WITHDRAW FINALITY OF OFFICE ACTION UNDER 37 CFR 1.181

This is in response to applicant's petition under 37 CFR 1.181 filed October 1, 2010, to request withdrawal of the finality of the final Office action mailed August 4, 2010.

The petition is **DISMISSED as MOOT**.

A review of the file reveals that after the mailing of the final Office action on August 4, 2010, applicant timely filed the instant petition and an amendment after final on October 1, 2010. The examiner mailed a non-final Office action on November 12, 2010, in which he indicated that the finality of the August 4, 2010 Office action is withdrawn. Subsequently, a Request for Express Abandonment of Application was filed on December 15, 2010.

In view of the facts that the examiner did withdraw the finality of the August 4, 2010 Office action via a non-final Office action of November 12, 2010 and the filing of the Request for Express Abandonment of Application, the petition for withdrawal of the finality is dismissed as moot. A Notice of Abandonment was properly mailed on December 22, 2010.

Any questions or comments with respect to the decision should be forwarded to Supervisory Patent Examiner, James Kramer at (571) 272-6783.

Wynn Coggins, Director
Patent Technology Center 3600
(571) 272-5350

wc/jak: 9/29/11
LM

UNITED STATES PATENT AND TRADEMARK OFFICE

Commissioner for Patents
United States Patent and Trademark Office
P.O. Box 1450
Alexandria, VA 22313-1450
www.uspto.gov

ROUND
LERNER, DAVID, LITTENBERG, KRUMHOLZ & MENTLIK, LLP
600 SOUTH AVENUE WEST
WESTFIELD NJ 07090

MAILED

OCT 08 2010

OFFICE OF PETITIONS

In re Application of	:	
J. Thomas Pawlowski	:	
Application No. 11/789,712	:	DECISION ON PETITION
Filed: April 24, 2007	:	
Attorney Docket No. ROUND 3.0-067 CO CO	:	

This is a decision on the renewed petition under the unintentional provisions of 37 CFR 1.137(b), filed September 16, 2010, to revive the above-identified application.

The petition is **GRANTED**.

This application became abandoned for failure to timely pay the issue and publication fees on or before June 14, 2010, as required by the Notice of Allowance and Fee(s) Due, mailed March 12, 2010. Accordingly, the date of abandonment of this application is June 15, 2010. The Notice of Abandonment was mailed August 23, 2010.

The petition satisfies the requirements of 37 CFR 1.137(b) in that petitioner has supplied (1) the reply in the form of payment of the issue fee of $1,510 and the publication fee of $300, (2) the petition fee of $1,620; and (3) a proper statement of unintentional delay.

Note: In order to have the previously filed RCE and IDS considered by the Technology Center, a petition to withdraw an application from issuance under 37 CFR 1.313(c)(2) must be promptly filed with the Petitions Office. The petition to withdraw from issue may be faxed to directly to the Office of Petitions at (571) 273-0025

Telephone inquiries concerning this decision should be directed to Terri Johnson at (571) 272-2991.

This application is being referred to the Office of Data Management for processing into a patent.

/Terri Johnson/
Terri Johnson
Petitions Examiner
Office of Petitions

UNITED STATES PATENT AND TRADEMARK OFFICE

Commissioner for Patents
United States Patent and Trademark Office
P.O. Box 1450
Alexandria, VA 22313-1450
www.uspto.gov

ROUND
LERNER DAVID LITTENBERG KRUMHOLZ & MENTLIK, LLP
600 SOUTH AVENUE WEST
WESTFIELD, NJ 07090

MAILED

OCT 27 2010

OFFICE OF PETITIONS

In re Application of :
J. Thomas Pawlowski :
Application No. 11/789,712 :
Filed: April 24, 2007 :
Attorney Docket No. ROUND 3.0-067 CO CO

ON PETITION

This is a decision on the petition, filed October 26, 2010 under 37 CFR 1.313(c)(2) to withdraw the above-identified application from issue after payment of the issue fee.

The petition is **GRANTED**.

The above-identified application is withdrawn from issue for consideration of a submission under 37 CFR 1.114 (request for continued examination). See 37 CFR 1.313(c)(2).

Petitioner is advised that the issue fee paid on September 16, 2010 in the above-identified application cannot be refunded. If, however, the above-identified application is again allowed, petitioner may request that it be applied towards the issue fee required by the new Notice of Allowance.[1]

Telephone inquiries should be directed to Irvin Dingle at (571) 272-3210.

This matter is being referred to Technology Center AU 2185 for processing of the request for continued examination under 37 CFR 1.114 and for consideration of the concurrently filed Information Disclosure Statement.

/Irvin Dingle/
Irvin Dingle
Petitions Examiner
Office of Petitions

---

[1] The request to apply the issue fee to the new Notice may be satisfied by completing and returning the new Issue Fee Transmittal Form PTOL-85(b), which includes the following language thereon: Commissioner for Patents is requested to apply the Issue Fee and Publication Fee (if any) or re-apply any previously paid issue fee to the application identified above. Petitioner is advised that, whether a fee is indicated as being due or not, the Issue Fee Transmittal Form **must** be completed and timely submitted to avoid abandonment. Note the language in bold text on the first page of the Notice of Allowance and Fee(s) Due (PTOL-85).

UNITED STATES PATENT AND TRADEMARK OFFICE

Commissioner for Patents
United States Patent and Trademark Office
P.O. Box 1450
Alexandria, VA 22313-1450
www.uspto.gov

MINTZ LEVIN COHN FERRIS
GLOVSKY AND POPEO PC
ONE FINANCIAL CENTER
BOSTON MA 02111

MAILED

AUG 02 2010

OFFICE OF PETITIONS

In re Application of	:	
Grasso, et al.	:	
Application No. 11/789,762	:	ON REQUEST FOR
Filed: April 24, 2007	:	RECONSIDERATION OF
Attorney Docket Number: 29708-501 CIP DIV	:	PATENT TERM ADJUSTMENT

This is a decision on the petition under 37 CFR 1.705(b), filed January 12, 2010. Applicants request that the total PTA as of the mailing of the initial determination of patent term adjustment be corrected to 9 days, not 72 days. In addition, Applicants request that the PTA be adjusted due to the Office's failure to issue the patent within three years.

In so far as the instant application for patent term adjustment requests reconsideration of the patent term adjustment as it relates to the Office's failure to issue the patent within 3 years of the filing date, the application for patent term adjustment under 37 CFR 1.705(b) is **DISMISSED as PREMATURE**.

Knowledge of the actual date the patent issues is required to calculate the amount, if any, of additional patent term patentee is entitled to for Office failure to issue the patent within 3 years. See § 1.702(b). (This is true even where a request for continued examination (RCE) was filed). The computer will not undertake the § 1.702(b) calculation until the actual date of issuance of the patent has been determined. Likewise, the computer will not calculate any further Office delay under § 1.702(a)(4) or applicant delay under § 1.704(c)(10) until the actual date of issuance of the patent has been determined. As such, the Office can not make a determination on the correctness of the patent term adjustment until the patent has issued.

Requesting reconsideration of the patent term adjustment to be indicated on the patent under 37 CFR 1.705(b) based on the initial determination of patent term adjustment and a projected issuance date of the patent (or even the filing date of the request for continued examination) is premature. Accordingly, it is appropriate to dismiss as premature such a request.

Rather than file a request for reconsideration of patent term adjustment under 37 CFR 1.705(b) contesting the 37 CFR 1.702(b) calculation at the time of the mailing of the notice of allowance, applicants are advised that they may wait until the time of the issuance of the patent and file a

request for reconsideration of the patent term adjustment pursuant to 37 CFR 1.705(d). As the USPTO does not calculate the amount of time earned pursuant to 37 CFR 1.702(b) until the time of the issuance of the patent, the Office will consider any request for reconsideration of the patent term adjustment due to an error in the calculation of 37 CFR 1.702(b) to be timely if the request for reconsideration is filed within two months of the issuance of the patent. However, as to all other bases for contesting the initial determination of patent term adjustment received with the notice of allowance, applicant must timely file an application for patent term adjustment prior to the payment of the issue fee[1].

However, applicants also point out that they should have been assessed additional delay of sixty-three (63) days. A review of the file confirms that applicants are correct. On July 15, 2009, Applicants filed a response to a May 15, 2009 final Office action. Subsequently, Applicants filed an IDS on September 16, 2009. Accordingly, pursuant to 37 CFR 1.704(c)(8), sixty-three (63) days of Applicant delay should have been assessed.

In view thereof, the correct determination of PTA at the time of mailing of the Notice of Allowance is **nine (9) days** (105 days of PTO delay, reduced by 96 (33 +63) days of Applicant delay).

The Office acknowledges submission of the $200.00 fee set forth in 37 CFR 1.18(e) for consideration of the application for patent term adjustment under 37 CFR 1.705(b).

The application is being referred to the Office of Data Management for issuance of the patent.

Telephone inquiries specific to this decision should be directed to Petitions Attorney Cliff Congo at (571) 272-3207.

Anthony Knight
Director
Office of Petitions

Enc: copy of revised PAIR screen

---

[1] For example, if applicant disputes both the calculation of patent term adjustment under 37 CFR 1.702(a)(1) for Office failure to mail a first Office action or notice of allowance not later than fourteen months after the date on which the application was filed and under 37 CFR 1.702(b) for Office failure to issue a patent within three years of the actual filing date of the application, then applicant must still timely file an application for patent term adjustment prior to the payment of the issue fee to contest the calculation of Office delay in issuing a first Office action or notice of allowance. See 37 CFR 1.705(b) and 35 U.S.C. 154(b)(3)(B). A dispute as to the calculation of the §1.702(a)(1) period raised on request for reconsideration of patent term adjustment under 37 CFR 1.705(d) will be dismissed as untimely filed.

Day : Sunday
Date: 7/18/2010

PALM INTRANET

Time: 11:26:51

PTA Calculations for Application: 11/789762			
Application Filing Date:	04/24/2007	PTO Delay (PTO):	105
Issue Date of Patent:		Three Years:	0
Pre-Issue Petitions:	0	Applicant Delay (APPL):	33
Post-Issue Petitions:	0	Total PTA (days):	9
PTO Delay Adjustment:	-63		

File Contents History

Number	Date	Contents Description	PTO	APPL	START
60	07/18/2010	ADJUSTMENT OF PTA CALCULATION BY PTO		63	
40	10/22/2009	MAIL NOTICE OF ALLOWANCE			
39	10/21/2009	ISSUE REVISION COMPLETED			
38	10/21/2009	DOCUMENT VERIFICATION			
37	10/21/2009	NOTICE OF ALLOWANCE DATA VERIFICATION COMPLETED			
36	10/08/2009	INFORMATION DISCLOSURE STATEMENT (IDS) FILED			
35	10/13/2009	ISSUE REVISION COMPLETED			
34	10/13/2009	DOCUMENT VERIFICATION			
33	10/01/2009	NOTICE OF ALLOWABILITY			
30	09/16/2009	INFORMATION DISCLOSURE STATEMENT CONSIDERED			
29	09/16/2009	INFORMATION DISCLOSURE STATEMENT (IDS) FILED			
28	08/14/2009	PARALEGAL TD ACCEPTED			
27	07/15/2009	TERMINAL DISCLAIMER FILED		0	25
26	07/17/2009	DATE FORWARDED TO EXAMINER			
25	07/15/2009	AMENDMENT AFTER FINAL REJECTION			
24	05/15/2009	MAIL FINAL REJECTION (PTOL - 326)			
23	05/11/2009	FINAL REJECTION			
22	02/24/2009	DATE FORWARDED TO EXAMINER			
21	02/09/2009	RESPONSE AFTER NON-FINAL ACTION		33	19
20	02/09/2009	REQUEST FOR EXTENSION OF TIME - GRANTED			
19	10/07/2008	MAIL NON-FINAL REJECTION	105		-1
18	10/01/2008	NON-FINAL REJECTION			

17	04/24/2007	INFORMATION DISCLOSURE STATEMENT CONSIDERED			
16	05/07/2008	CASE DOCKETED TO EXAMINER IN GAU			
15	05/08/2008	PG-PUB ISSUE NOTIFICATION			
14	04/23/2008	IFW TSS PROCESSING BY TECH CENTER COMPLETE			
13	04/24/2007	INFORMATION DISCLOSURE STATEMENT (IDS) FILED			
12	04/24/2007	INFORMATION DISCLOSURE STATEMENT (IDS) FILED			
11	02/07/2008	APPLICATION DISPATCHED FROM OIPE			
10	01/24/2008	SENT TO CLASSIFICATION CONTRACTOR			
9	01/24/2008	FILING RECEIPT			
8	01/24/2008	APPLICATION IS NOW COMPLETE			
7	07/30/2007	CRF IS GOOD TECHNICALLY / ENTERED INTO DATABASE			
6	05/11/2007	CLEARED BY L&R (LARS)			
5	05/11/2007	REFERRED TO LEVEL 2 (LARS) BY OIPE CSR			
4	05/11/2007	CASE CLASSIFIED BY OIPE			
3	05/09/2007	IFW SCAN & PACR AUTO SECURITY REVIEW			
2	04/24/2007	CRF DISK HAS BEEN RECEIVED BY PREEXAM / GROUP / PCT			
1	04/26/2007	INITIAL EXAM TEAM NN			

Search Another: Application# [ ] Search

EXPLANATION OF PTA CALCULATION

EXPLANATION OF PTE CALCULATION

To go back, right click here and select Back. To go forward, right click here and select Forward. To refresh, right click here and select Refresh.

Back to OASIS | Home page

UNITED STATES PATENT AND TRADEMARK OFFICE

Commissioner for Patents
United States Patent and Trademark Office
P.O. Box 1450
Alexandria, VA 22313-1450
www.uspto.gov

THE MATTHEWS FIRM
2000 BERING DRIVE
SUITE 700
HOUSTON TX 77057

MAILED

SEP 30 2010

OFFICE OF PETITIONS

In re Application of	:	
Daniel D. LeBlanc et al.	:	
Application No. 11/789,803	:	DECISION ON PETITION
Filed: April 24, 2007	:	TO WITHDRAW
Attorney Docket No. ULTRAPURE-001:CIP2	:	FROM RECORD
	:	

This is a decision on the Request to Withdraw as attorney or agent of record under 37 C.F.R. § 1.36(b), filed August 20, 2010.

The request is **NOT APPROVED.**

The Office will no longer accept address changes to a new practitioner or law firm filed with a Request, absent the filing of a power of attorney to the new representative. The Office will either change the correspondence address of record to the most current address information provided for the assignee of the entire interest who properly became of record under 37 CFR 3.71 or, if no assignee of the entire interest has properly been made of record under 37 CFR 3.71, the most current address information provided for the first named inventor.

Accordingly, the request to withdraw from record cannot be approved because the request to change the correspondence address is not that of: (1) the first named inventor; or (2) an assignee of the entire interest under 37 C.F.R 3.71. If an assignee has ownership in this application, then a Statement under 37 CFR 3.73(b) or a copy of the actual assignment must be provided with a renewed request.

All future communications from the Office will continue to be directed to the above-identified address until otherwise properly notified.

Telephone inquiries concerning this decision should be directed to the undersigned at 571-272- 4618.

/Kimberly Inabinet/

Kimberly Inabinet
Petitions Examiner
Office of Petitions

UNITED STATES PATENT AND TRADEMARK OFFICE

Commissioner for Patents
United States Patent and Trademark Office
P.O. Box 1450
Alexandria, VA 22313-1450
www.uspto.gov

MAILED

OCT 28 2010

OFFICE OF PETITIONS

THE MATTHEWS FIRM
2000 BERING DRIVE
SUITE 700
HOUSTON TX 77057

In re Application of	:	
Daniel D. LeBlanc et al.	:	
Application No. 11/789,803	:	DECISION ON PETITION
Filed: April 24, 2007	:	TO WITHDRAW
Attorney Docket No. ULTRAPURE-001:CIP2	:	FROM RECORD
	:	

This is a decision on the renewed Request to Withdraw as attorney or agent of record under 37 C.F.R. § 1.36(b), filed October 4, 2010.

The request is **NOT APPROVED.**

The Office will no longer accept address changes to a new practitioner or law firm filed with a Request, absent the filing of a power of attorney to the new representative. The Office will either change the correspondence address of record to the most current address information provided for the assignee of the entire interest who properly became of record under 37 CFR 3.71 or, if no assignee of the entire interest has properly been made of record under 37 CFR 3.71, the most current address information provided for the first named inventor.

The request can not be approved at this time. Our record indicates that an assignee has ownership in this application, but the application file does not contain a Statement under 37 CFR 3.73(b) or a copy of the actual assignment. Either one or both of these documents must be provided with a renewed request.

All future communications from the Office will continue to be directed to the above-identified address until otherwise properly notified.

Telephone inquiries concerning this decision should be directed to the undersigned at 571-272- 4618.

/Kimberly Inabinet/

Kimberly Inabinet
Petitions Examiner
Office of Petitions

UNITED STATES PATENT AND TRADEMARK OFFICE

Commissioner for Patents
United States Patent and Trademark Office
P.O. Box 1450
Alexandria, VA 22313-1450
www.uspto.gov

KINNEY & LANGE, P.A.
THE KINNEY & LANGE BUILDING
312 SOUTH THIRD STREET
MINNEAPOLIS MN 55415-1002

MAILED

OCT 29 2010

OFFICE OF PETITIONS

In re Application of	:	
Rainer Herrmann, et al.	:	
Application No. 11/789,877	:	DECISION GRANTING PETITION
Filed: April 26, 2007	:	UNDER 37 CFR 1.313(c)(2)
Attorney Docket No. T406. 312-0001	:	

This is a decision on the petition under 37 CFR 1.313(c)(2), filed, October 27, 2010 to withdraw the above-identified application from issue after payment of the issue fee.

The petition is **GRANTED.**

The above-identified application is withdrawn from issue for consideration of a submission under 37 CFR 1.114 (request for continued examination). *See* 37 CFR 1.313(c)(2).

Petitioner is advised that the issue fee paid on October 13, 2010 cannot be refunded. If, however, this application is again allowed, petitioner may request that it be applied towards the issue fee required by the new Notice of Allowance.[1]

Telephone inquiries should be directed to Terri Johnson at (571) 272-2991.

This application is being referred to Technology Center AU 2891 for processing of the request for continued examination under 37 CFR 1.114 and for consideration of the concurrently filed information disclosure statement.

/Terri Johnson/
Terri Johnson
Petitions Examiner
Office of Petitions

---

[1] *The request to apply the issue fee to the new Notice may be satisfied by completing and returning the new Part B – Fee(s) Transmittal Form (along with any balance due at the time of submission). Petitioner is advised that the Issue Fee Transmittal Form must be completed and timely submitted to avoid abandonment of the application.*

UNITED STATES PATENT AND TRADEMARK OFFICE

Commissioner for Patents
United States Patent and Trademark Office
P.O. Box 1450
Alexandria, VA 22313-1450
www.uspto.gov

Andrews Kurth LLP
111 Congress Avenue
Suite 1700
Austin TX 78701

MAILED
APR 25 2011
OFFICE OF PETITIONS

In re Application of :
Taylor, et al. :
Application No. 11/789,917 : ON PETITION
Filed: April 26, 2007 :
Attorney Docket No. 21CT0002/ AK 170946 :
For: METHOD AND SYSTEM FOR SOLVING AN OPTIMIZATION PROBLEM WITH DYNAMIC CONSTRAINTS

This is a decision on the petition under 37 CFR 1.137(b), March 25, 2011. Petitioners allege non-receipt. Therefore, in addition, the petition will be treated under 37 CFR 1.181, as a petition to withdraw the holding of abandonment.

The constructive petition under 37 CFR 1.181 is **DISMISSED**.

The petition under 37 CFR 1.137(b) is **GRANTED**.

The Office contends that the above-identified application became abandoned for failure to submit a reply to the July 27, 2010 non-final Office action, which set an extendable three month period for reply. No extensions of time or reply being received, this application became abandoned on October 28, 2010. The filing of the present petition precedes the mailing of a Notice of Abandonment.

Petitioners allege that the July 27, 2010 non-final Office action was not received at the correspondence address of record.

A review of the record indicates no irregularity in the mailing of the July 28, 2010 non-final Office action, and in the absence of any irregularity there is a strong presumption that the communication was properly mailed to the applicants at the correspondence address of record. This presumption may be overcome by a showing that the aforementioned communication was not in fact received.

The showing required to establish non-receipt of an Office communication must include:

(1) a statement from the practitioner describing the system used for recording an Office action received at the correspondence address of record with the USPTO. The statement should

establish that the docketing system is sufficiently reliable. It is expected that the record would include, but not be limited to, the application number, attorney docket number, the mail date of the Office action and the due date for the response.

(2) Practitioner must state that the Office action was not received at the correspondence address of record, and that a search of the practitioner's record(s), including any file jacket or the equivalent, and the application contents, indicates that the Office action was not received.

(3) A copy of the record(s) used by the practitioner where the non-received Office action would have been entered had it been received is required. A copy of the practitioner's record(s) required to show non-receipt of the Office action should include the master docket for the firm. That is, if a three month period for reply was set in the non-received Office action, a copy of the master docket report showing all replies docketed for a date three months from the mail date of the non-received Office action must be submitted as documentary proof of non-receipt of the Office action. If no such master docket exists, the practitioner should so state and provide other evidence such as, but not limited to, the following: the application file jacket; incoming mail log; calendar; reminder system; or the individual docket record for the application in question. See MPEP §711.03(c)(I)(A).

The showing in the constructive petition lacks (1) – (3). The constructive petition under 37 CFR 1.181 is **dismissed**.

Applicants have submitted an amendment in reply to the July 27, 2010 non-final Office action, an acceptable statement of the unintentional nature of the delay in responding to the July 27, 2010 non-final Office action, and the $810.00 petition fee. All of the requirements under 37 CFR 1.137(b) being met, the petition is **granted**.

After the mailing of this decision, the application will be returned to Technology Center AU 2129 for consideration of the amendment filed on April 4, 2008.

Telephone inquiries may be directed to the undersigned at (571) 272-3230.

Shirene Willis Brantley

Shirene Willis Brantley
Senior Petitions Attorney
Office of Petitions

UNITED STATES PATENT AND TRADEMARK OFFICE

Commissioner for Patents
United States Patent and Trademark Office
P.O. Box 1450
Alexandria, VA 22313-1450
www.uspto.gov

KATTEN MUCHIN ROSENMAN LLP
(C/O PATENT ADMINISTRATOR)
2900 K STREET NW, SUITE 200
WASHINGTON DC 20007-5118

MAILED
FEB 08 2011
OFFICE OF PETITIONS

In re Patent No. 7,672,858	:	
Issue Date: March 2, 2010	:	
Application No. 11/789,960	:	NOTICE
Filed: April 26, 2007	:	
Attorney Docket No. 331921-0003	:	

This is a notice regarding your request for acceptance of a fee deficiency submission under 37 CFR 1.28 filed December 10, 2010. On September 1, 1998, the Court of Appeals for the Federal Circuit held that 37 CFR 1.28(c) is the sole provision governing the time for correction of the erroneous payment of the issue fee as a small entity. **See DH Technology v. Synergystex International, Inc. 154 F.3d 1333, 47 USPQ2d 1865 (Fed. Cir. Sept. 1, 1998).**

The Office no longer investigates or rejects original or reissue applications under 37 CFR 1.56. **1098 Off. Gaz. Pat. Office 502 (January 3, 1989).** Therefore, nothing in this Notice is intended to imply that an investigation was done.

Your fee deficiency submission under 37 CFR 1.28 is hereby accepted. The petition is **GRANTED**.

This application is no longer entitled to small entity status. Accordingly, all future fees paid in this application must be paid at the large entity rate.

This file is being forwarded to Files Repository.

Telephone inquiries related to this decision should be directed to the Kimberly Inabinet at (571) 272-4618.

/Carl Friedman/
Carl Friedman
Petitions Examiner
Office of Petitions

UNITED STATES PATENT AND TRADEMARK OFFICE

1-13-2011

Commissioner for Patents
United States Patent and Trademark Office
P.O. Box 1450
Alexandria, VA 22313-1450
www.uspto.gov

Patent No. : 7,849,672 B2
Ser. No. : 11/790,028
Inventor(s) : Daisuke Shibata, et. al.
Issued : December 14, 2010

Re: Request for Certificate of Correction

Consideration has been given your request for the issuance of a certificate of correction for the above-identified patent under the provisions of Rule(s) 1.322.

Assignees' names and addresses (assignment data) printed in a patent, are based *solely* on information supplied in the appropriate space for identifying the assignment data, i.e., item 3 of the Issue Fee Transmittal Form PTOL-85B. Granting of a request under 37 CFR 3.81(b) is required to correct applicant's error providing ***incorrect or erroneous*** assignment data, *before* issuance of a Certificate of Correction, under 37 CFR 1.323 *(see Manual of Patent Examining Procedures (M.P.E.P) Chp.1400, sect. 1481).* This procedure is required *at any time after the issue fee is paid*, including after issuance of the patent.

In view of the foregoing, your request is hereby denied.

Page 2, of the title page, item 56, under Other Publications the word, purported to be in 1st column line 13th cannot be found in the printed patent.

A request to correct the Assignee under 37 CFR 3.81(b) should include:

A. **the processing fee set forth in 37 CFR 1.17(i) (currently $130);**
B. a statement that the failure to include the correct assignee name on the PTOL-85B was inadvertent; and
C. a copy of the Notice of Recordation of Assignment Document, reflecting the reel and frame number where the assignment(s) is recorded and/or reflecting proof of *the date* the assignment was submitted for recordation.

In the Request, Applicant(s) may request that the file be forwarded to Certificates of Correction Branch, for issuance of a Certificate of Correction, if the Request is granted.

Any request under 37 CFR 3.81(b) should be directed to the following address or facsimile number:

By mail: Mail Stop PETITIONS
Commissioner for Patents
Post Office Box 1450
Alexandria, VA 22313-1450

By hand: Customer Service Window
Mail Stop Petitions
Randolph Building
401 Dulany Street
Alexandria, VA 22314

By fax: (703) 872-9306
ATTN: Office of Petitions

If a fee (currently $100) was previously submitted for consideration of a Request for Certificate of Correction, under CFR 1.323, to correct assignment data, , no additional fee is required.

Eva James
For Mary Diggs
Decisions & Certificates
of Correction Branch
(571) 272-3422 or 703- 756 -1580

James A. Oliff
Oliff & Beridge
P.O. Box 320850
Alexandria, VA 22320-4850

ej

UNITED STATES PATENT AND TRADEMARK OFFICE

Commissioner for Patents
United States Patent and Trademark Office
P.O. Box 1450
Alexandria, VA 22313-1450
www.uspto.gov

Patent No. : 7,849,672 B2
Ser. No. : 11/790,028
Inventor(s) :Daisuke Shibata, et. al.
Issued : December 14, 2010

Re: Request for Certificate of Correction

Consideration has been given your request for the issuance of a certificate of correction for the above-identified patent under the provisions of Rule(s) 1.322.

Assignees' names and addresses (assignment data) printed in a patent, are based *solely* on information supplied in the appropriate space for identifying the assignment data, i.e., item 3 of the Issue Fee Transmittal Form PTOL-85B. Granting of a request under 37 CFR 3.81(b) is required to correct applicant's error providing ***incorrect or erroneous*** assignment data, *before* issuance of a Certificate of Correction, under 37 CFR 1.323 *(see Manual of Patent Examining Procedures (M.P.E.P) Chp.1400, sect. 1481).* This procedure is required *at any time after the issue fee is paid,* including after issuance of the patent.

In view of the foregoing, your request is hereby denied.

A request to correct the Assignee under 37 CFR 3.81(b) should include:

A. **the processing fee set forth in 37 CFR 1.17(i) (currently $130);**
B. a statement that the failure to include the correct assignee name on the PTOL-85B was inadvertent; and
C. a copy of the Notice of Recordation of Assignment Document, reflecting the reel and frame number where the assignment(s) is recorded and/or reflecting proof of *the date* the assignment was submitted for recordation.

In the Request, Applicant(s) may request that the file be forwarded to Certificates of Correction Branch, for issuance of a Certificate of Correction, if the Request is granted.

Any request under 37 CFR 3.81(b) should be directed to the following address or facsimile number:

By mail: Mail Stop PETITIONS
Commissioner for Patents
Post Office Box 1450
Alexandria, VA 22313-1450

By hand: Customer Service Window
Mail Stop Petitions
Randolph Building
401 Dulany Street
Alexandria, VA 22314

By fax: (703) 872-9306
ATTN: Office of Petitions

If a fee (currently $100) was previously submitted for consideration of a Request for Certificate of Correction, under CFR 1.323, to correct assignment data, , no additional fee is required.

Eva James
For Mary Diggs
Decisions & Certificates
of Correction Branch
(571) 272-3422 or 703- 756 -1580

James A. Oliff
Oliff & Berridge
P.O. Box 320850
Alexander, VA 22320-4850

ej

UNITED STATES PATENT AND TRADEMARK OFFICE

1-26-2011

Commissioner for Patents
United States Patent and Trademark Office
P.O. Box 1450
Alexandria, VA 22313-1450
www.uspto.gov

Patent No : 7,868,693 B2
Ser. No. : 11/790,028
Inventor(s) :Daisuke Shibata, et. al.
Issued : December 14, 2010

Re: Request for Certificate of Correction

Consideration has been given your request for the issuance of a certificate of correction for the above-identified patent under the provisions of Rule(s) 1.322.

Assignees' names and addresses (assignment data) printed in a patent, are based *solely* on information supplied in the appropriate space for identifying the assignment data, i.e., item 3 of the Issue Fee Transmittal Form PTOL-85B. Granting of a request under 37 CFR 3.81(b) is required to correct applicant's error providing ***incorrect or erroneous*** assignment data, *before* issuance of a Certificate of Correction, under 37 CFR 1.323 *(see Manual of Patent Examining Procedures (M.P.E.P) Chp.1400, sect. 1481).* This procedure is required *at any time after the issue fee is paid*, including after issuance of the patent.

In view of the foregoing, your request is hereby denied.

A request to correct the Assignee under 37 CFR 3.81(b) should include:

A. **the processing fee set forth in 37 CFR 1.17(i) (currently $130);**
B. a statement that the failure to include the correct assignee name on the PTOL-85B was inadvertent; and
C. a copy of the Notice of Recordation of Assignment Document, reflecting the reel and frame number where the assignment(s) is recorded and/or reflecting proof of *the date* the assignment was submitted for recordation.

In the Request, Applicant(s) may request that the file be forwarded to Certificates of Correction Branch, for issuance of a Certificate of Correction, if the Request is granted.

Any request under 37 CFR 3.81(b) should be directed to the following address or facsimile number:

By mail: Mail Stop PETITIONS
Commissioner for Patents
Post Office Box 1450
Alexandria, VA 22313-1450

By hand: Customer Service Window
Mail Stop Petitions
Randolph Building
401 Dulany Street
Alexandria, VA 22314

By fax: (703) 872-9306
ATTN: Office of Petitions

If a fee (currently $100) was previously submitted for consideration of a Request for Certificate of Correction, under CFR 1.323, to correct assignment data, , no additional fee is required.

Eva James
For Mary Diggs
Decisions & Certificates
of Correction Branch
(571) 272-3422 or 703- 756 -1580

Murabito, Hao & Barnes
Two North market Street, 3rd Floor
San Jose CA, 95113

ej

UNITED STATES PATENT AND TRADEMARK OFFICE

COMMISSIONER FOR PATENTS
UNITED STATES PATENT AND TRADEMARK OFFICE
P.O. BOX 1450
ALEXANDRIA, VA 22313-1450
www.uspto.gov

OLIFF & BERRIDGE, PLC
P.O. BOX 320850
ALEXANDRIA VA 22320-4850

MAILED
JUN 28 2011
OFFICE OF PETITIONS

In re Patent No. 7,849,672 :
Issue Date: 12/14/2010 :
Application No. 11/790,028 : ON PETITION
Filed: 04/23/2007 :
Attorney Docket No. 132282 :

This is a decision on the petition under 37 CFR 3.81(b) filed January 26, 2011.

Patentees request correction of the front page of the Letters Patent to include the correct assignee data via Certificate of Correction. With the present request, patentees submitted a completed Certificate of Correction form and paid the requisite fees. Furthermore, it is noted that the assignment was recorded with the USPTO prior to the issuance of the patent.

In view of the above, the request under 37 CFR 3.81(b) to correct the assignee data is GRANTED.

Telephone inquiries concerning this decision may be directed to the undersigned at (571) 272-3211. Inquiries regarding the issuance of a certificate of correction should be directed to the Certificate of Correction Branch at (571) 272-4200.

The Certificates of Correction Branch will be notified of this decision granting the petition under 37 CFR 3.81(b) and directing issuance of the requested Certificate of Correction as to the assignment information.

C. T. Donnell

Christina Tartera Donnell
Senior Petitions Attorney
Office of Petitions

Doc Code: PET.RELIEF
Document Description: Certification and Request for Disaster Relief

PTO/SB/425 (03-11)

CERTIFICATION AND REQUEST FOR RELIEF DUE TO EVENTS OF MARCH 11, 2011, IN JAPAN (Page 1 of 2)

Nonprovisional Application Number or Control Number (if applicable): 11/790,224	Patent Number (if applicable):
First Named Inventor: Atsushi Takane	Title of Invention: Semiconductor Inspection System

APPLICANT/PATENTEE/REEXAMINATION PARTY HEREBY CERTIFIES AND REQUESTS THE FOLLOWING FOR THE ABOVE-IDENTIFIED APPLICATION/PATENT/REEXAMINATION PROCEEDING.

1. FOR PATENT APPLICATIONS AND REEXAMINATION PROCEEDINGS PENDING IN THE USPTO AS OF MARCH 11, 2011, IN WHICH A COMMUNICATION FROM THE USPTO IS SOUGHT TO BE REMAILED:

   a. One or more inventors, an assignee, or a correspondence address (for the application/proceeding) is in an area of Japan affected by the earthquake and/or tsunami of March 11, 2011.

   b. A reply or response to an Office action (final, non-final, or other), a notice of allowance, or other Office notice (hereinafter collectively referred to as "Office communication") is outstanding on March 11, 2011.

   c. The statutory or non-statutory time period set for response has not yet expired.

   d. Withdrawal and reissuance of the Office communication is requested.

   e. It is acknowledged that if this request is not made within sufficient time so that withdrawal and reissuance of the Office communication occur prior to expiration of the statutory or non-statutory time period (as permitted to be extended under 37 CFR 1.136(a), or as extended under 37 CFR 1.550(c) or 1.956), this request may not be granted.

   f. The need for the reissuance of the Office communication was due to the effects of the earthquake and/or tsunami of March 11, 2011.

   g. This request is being sent via EFS-Web or by mail directed to Mail Stop Petition, Commissioner for Patents, P.O. Box 1450, Alexandria, VA 22313-1450.

2. FOR PATENTEES WHO WERE UNABLE TO TIMELY PAY A PATENT MAINTENANCE FEE DURING THE SIX-MONTH GRACE PERIOD FOLLOWING THE WINDOW TO PAY THE MAINTENANCE FEE:

   a. The original window of time to pay the maintenance fee without the surcharge required by 37 CFR 1.20(h) expired on or after March 11, 2011.

   b. The delay in paying the fee was due to the effects of the earthquake and/or tsunami of March 11, 2011.

   c. The USPTO is requested to *sua sponte* waive the surcharge in 37 CFR 1.20(h) for paying a maintenance fee during the six-month grace period following the window to pay the maintenance fee.

   d. This request and payment of the maintenance fee during the six-month grace period following the window to pay the maintenance fee is being mailed to: Director of the United States Patent and Trademark Office, Attn: Maintenance Fee, 2051 Jamieson Avenue, Suite 300, Alexandria, VA 22314; or being transmitted via facsimile to: 571-273-6500.

CERTIFICATION AND REQUEST FOR RELIEF DUE TO EVENTS OF MARCH 11, 2011, IN JAPAN (Page 2 of 2)

3. FOR PATENTEES WHO NEED TO FILE A PETITION TO ACCEPT A DELAYED MAINTENANCE FEE PAYMENT UNDER 37 CFR 1.378(c):

   a. The maintenance fee payment was required to have been paid after March 10, 2011.

   b. A petition under 37 CFR 1.378(c) (using USPTO form PTO/SB/66 – Petition to Accept Unintentionally Delayed Payment of Maintenance Fee in an Expired Patent (37 CFR 1.378(c))) is being promptly filed accompanied by the applicable maintenance fee payment (but not the surcharge under 37 CFR 1.20(i)).

   c. The delay in payment of the maintenance fee was due to the effects of the earthquake and/or tsunami of March 11, 2011.

   d. The USPTO is requested to *sua sponte* waive the surcharge in 37 CFR 1.20(i) for accepting a delayed maintenance fee payment.

   e. It is acknowledged that the petition to accept a delayed maintenance fee payment under 37 CFR 1.378(c) must be filed by March 11, 2012, in order to be entitled to a waiver of the surcharge under 37 CFR 1.20(i).

   f. It is acknowledged that the petition to accept a delayed maintenance fee payment under 37 CFR 1.378(c) must be filed within twenty-four months from the expiration date of the patent. *See* 35 U.S.C 41(c).

   g. This request and the petition to accept a delayed maintenance fee payment under 37 CFR 1.378(c) is being submitted via EFS-Web or by mail directed to Mail Stop Petition, Commissioner for Patents, P.O. Box 1450, Alexandria, VA 22313-1450.

4. FOR NONPROVISIONAL PATENT APPLICATIONS FILED WITHOUT AN EXECUTED OATH OR DECLARATION OR PAYMENT OF THE BASIC FILING FEE, SEARCH FEE, AND/OR EXAMINATION FEE:

   a. The nonprovisional patent application was filed on or after March 11, 2011, and prior to April 12, 2011.

   b. The late filing of the oath or declaration or the basic filing fee, search fee, or examination fee was due to the effects of the earthquake and/or tsunami of March 11, 2011.

   c. The USPTO is requested to *sua sponte* waive the surcharge set forth in 37 CFR 1.16(f) for the late filing of the oath or declaration or basic filing fee, search fee, and/or examination fee.

   d. This request, together with the executed oath or declaration or the basic filing fee, search fee, or examination fee, as well as the reply to the Notice to File Missing Parts, is being submitted via EFS-Web or by mail directed to Mail Stop Missing Parts, Commissioner for Patents, P.O. Box 1450, Alexandria, VA 22313-1450.

Signature	Date July 26, 2011
Name (Print/Typed) Mark J. Thronson	Practitioner Registration Number 33,082

Note: *Signatures of all the inventors, § 1.41(b) applicants, or assignees of record of the entire interest or their representative(s), or reexamination requesters at the appeal stage are required in accordance with 37 CFR 1.33 and 11.18. Please see 37 CFR 1.4(d) for the form of the signature. If necessary, submit multiple forms for more than one signature, see below*.*

☐ *Total of 1 forms are submitted.

UNITED STATES PATENT AND TRADEMARK OFFICE

Commissioner for Patents
United States Patent and Trademark Office
P.O. Box 1450
Alexandria, VA 22313-1450
www.uspto.gov

DICKSTEIN SHAPIRO LLP
1825 EYE STREET NW
WASHINGTON DC 20006-5403

MAILED

JUL 29 2011

OFFICE OF PETITIONS

In re Application of	:	
Takane et al.	:	
Application No. 11/790,224	:	DECISION ON PETITION
Filed: April 24, 2007	:	
Attorney Docket No. H6808.0004/P004-B	:	

This is a decision on the request filed July 26, 2011, seeking relief under the provisions of "Relief Available to Patent and Trademark Applicants, Patentees and Trademark Owners Affected by the Catastrophic Events of March 11, 2011 in Japan," 1365 Off. Gaz. Pat. Office 170 (April 19, 2011).

The request for relief is **GRANTED**.

In the above-identified application, an Office action was mailed on February 18, 2011. The instant petition was filed prior to the expiration of the period for reply and the certifications for granting of relief are considered to be met by the submission of the request.

Telephone inquires concerning this decision should be directed to the undersigned at 571-272-7751. All other inquires concerning either the examination or status of the application should be directed to the Technology Center.

This application is being referred to the Technology Center, Art Unit 2624 for re-mailing the Office action of February 18, 2011. The period for reply will run from the mailing date of the Office action.

/Joan Olszewski/
Joan Olszewski
Petitions Examiner
Office of Petitions

UNITED STATES PATENT AND TRADEMARK OFFICE

UNITED STATES DEPARTMENT OF COMMERCE
United States Patent and Trademark Office
Address: COMMISSIONER FOR PATENTS
P.O. Box 1450
Alexandria, Virginia 22313-1450
www.uspto.gov

APPLICATION NO.	FILING DATE	FIRST NAMED INVENTOR	ATTORNEY DOCKET NO.	CONFIRMATION NO.
11/790,340	04/25/2007	Kurt Blank	R.315188	9484

7590 06/17/2011

RONALD E. GREIGG
GREIGG & GREIGG P.L.L.C.
1423 POWHATAN STREET, UNIT ONE
ALEXANDRIA, VA 22314

EXAMINER
MOULIS, THOMAS N

ART UNIT	PAPER NUMBER
3747	

MAIL DATE	DELIVERY MODE
06/17/2011	PAPER

DECISION DISMISSING PETITION UNDER 37 CFR 1.138(d)

The declaration of express abandonment will not be recognized

This is in response to the petition under 37 CFR 1.138(d), requesting for a refund of any previously paid search fee and excess claims fee in the above-identified application.

The petition is dismissed.

The express abandonment will **not** be recognized for the reason(s) indicated below:

1. ☐ The petition was not filed in sufficient time to permit the appropriate officials to recognize the abandonment before an examination has been made of the application. See 37 CFR 1.138(d).
2. ☐ The petition was not signed by a party authorized by 37 CFR 1.33(b)(1), (3) or (4).
3. ☑ The application is not an application filed under 35 U.S.C. 111(a) on or after December 8, 2004.
4. ☐ The petition for express abandonment under 1.138(d) is dismissed because the applicant did not pay any search fee and excess claims fees in the above-identified application.

Telephone inquiries should be directed to the Office of Data Management at (571) 272-4200.

Nioni Farmer

Patent Publication Branch
Office of Data Management

FORM PET651D (Rev. 08/07)

UNITED STATES PATENT AND TRADEMARK OFFICE

UNITED STATES DEPARTMENT OF COMMERCE
United States Patent and Trademark Office
Address: COMMISSIONER FOR PATENTS
P.O. Box 1450
Alexandria, Virginia 22313-1450
www.uspto.gov

APPLICATION NO.	FILING DATE	FIRST NAMED INVENTOR	ATTORNEY DOCKET NO.	CONFIRMATION NO.
11/790,349	04/25/2007	Shigeyuki Asuke	DSG-723-2149	9567

27562 7590 12/22/2010
NIXON & VANDERHYE, P.C.
901 NORTH GLEBE ROAD, 11TH FLOOR
ARLINGTON, VA 22203

EXAMINER
GALKA, LAWRENCE STEFAN

ART UNIT	PAPER NUMBER
3717	

MAIL DATE	DELIVERY MODE
12/22/2010	PAPER

Please find below and/or attached an Office communication concerning this application or proceeding.

The time period for reply, if any, is set in the attached communication.

UNITED STATES PATENT AND TRADEMARK OFFICE

Commissioner for Patents
United States Patent and Trademark Office
P.O. Box 1450
Alexandria, VA 22313-1450
www.uspto.gov

NIXON & VANDERHYE, P.C.
901 NORTH GLEBE ROAD, 11TH FLOOR
ARLINGTON VA 22203

In re Application of:
ASUKE, SHIGEYUKI et al
Serial No. 11/790,349
Filed: April 25, 2007
Docket: DSG-723-2149
Title: VIDEO GAME WITH SCREEN FLIP AND DUAL SETS OF COLLISION DATA

DECISION ON PETITION UNDER 37 CFR 1.59

This is a decision on the petition filed August 12, 2010 requesting expunge of documents relating to the mistakenly filing of an RCE, IDS and a copy of non-patent literature on August 10, 2010. In the petition, petitioner requests expunge of documents as filed on August 10, 2010 under RCE and Information Disclosure Statement because the listed documents were filed by mistake and was intended for another application, SN 10/593,828. The RCE and IDS filed on August 10, 2010 includes 1 Request for Continued Examination, 2 pages of IDS and 1 non-patent literature (4 pages).

The petition is **granted**.

The USPTO does not remove any papers filed in an application. However, since the applicant has mistakenly filed the wrong documents on August 10, 2010, the documents have been blocked from public view in the Public Pair system. Since the filing fee of an RCE was by mistake, the request for refund of the filing fee is also granted.

Any inquiry regarding this decision should be directed to Henry C. Yuen, Special Programs Examiner, at (571) 272-4856.

PETITION GRANTED

Donald T. Hajec, Director
Technology Center 3700

UNITED STATES PATENT AND TRADEMARK OFFICE

Commissioner for Patents
United States Patent and Trademark Office
P.O. Box 1450
Alexandria, VA 22313-1450
www.uspto.gov

JOHN S. HALE
GIPPLE & HALE
6665-A OLD DOMINION DRIVE
MCLEAN, VA 22101

MAILED

OCT 25 2010

OFFICE OF PETITIONS

In re Application of :
Kevin J. KAIL, et *al.* :
Application No. 11/790,385 : DECISION ON PETITION
Filed: April 25, 2007 :
Attorney Docket No. **X-9611** :

This is a decision on the petition, filed June 25, 2010, which is being treated as a petition under 37 CFR 1.181, requesting withdrawal of the holding of abandonment in the above-identified application.

The petition is **GRANTED**.

This application was held abandoned for failure to timely respond to the Office action of November 10, 2009, which set a three (3) month shortened statutory period for reply. Accordingly, a reply was due on or before February 10, 2010.

Petitioner states that a timely reply was mailed on February 12, 2010, which included an authorization to charge deposit account number 07-1340 any additional fees required.

> A review of the file record discloses that authorization to charge any required fees was in fact included on the last page of remarks submitted with the reply on February 12, 2010.

In view of the above, the holding of abandonment for failure to timely file a reply to the Office action of November 10, 2009 is hereby withdrawn and the application restored to pending status.

The copy of the reply received with the petition will be accepted in place of the reply shown to have been mailed on February 12, 2010.

The petition fee of $810 submitted with the petition has been refunded to petitioner's deposit account number 07-1340.

This application is being referred to Technology Center AU 2876 for appropriate action in the normal course of business on the reply received with petition.

Thurman K. Page
Petitions Examiner
Office of Petitions

UNITED STATES PATENT AND TRADEMARK OFFICE

Commissioner for Patents
United States Patent and Trademark Office
P.O. Box 1450
Alexandria, VA 22313-1450
www.uspto.gov

KILPATRICK TOWNSEND & STOCKTON LLP
TWO EMBARCADERO CENTER, EIGHTH FLOOR
SAN FRANCISCO, CA 94111-3834

MAILED

MAR 31 2011

OFFICE OF PETITIONS

In re Application of :
Swee Lin HOFFMAN, et *al.* :
Application No. 11/790,394 : DECISION GRANTING PETITION
Filed: April 25, 2007 : UNDER 37 CFR 1.313(c)(2)
Attorney Docket No. **91345-736150** :

This is a decision on the petition under 37 CFR 1.313(c)(2), filed March 30, 2011, to withdraw the above-identified application from issue after payment of the issue fee.

The petition is **GRANTED.**

The above-identified application is withdrawn from issue for consideration of a submission under 37 CFR 1.114 (request for continued examination). *See* 37 CFR 1.313(c)(2).

Petitioner is advised that the issue fee paid on March 8, 2011 cannot be refunded. If, however, this application is again allowed, petitioner may request that it be applied towards the issue fee required by the new Notice of Allowance.[1]

Telephone inquiries should be directed to the undersigned at (571) 272-7253.

This application is being referred to Technology Center AU 3721 for processing of the request for continued examination under 37 CFR 1.114 and for consideration of the concurrently filed information disclosure statement.

/Monica A. Graves/
Petitions Examiner, Office of Petitions

---

[1] *The request to apply the issue fee to the new Notice may be satisfied by completing and returning the new Part B – Fee(s) Transmittal Form (along with any balance due at the time of submission). Petitioner is advised that the Issue Fee Transmittal Form* ***must*** *be completed and timely submitted to avoid abandonment of the application.*

UNITED STATES PATENT AND TRADEMARK OFFICE

Commissioner for Patents
United States Patent and Trademark Office
P.O. Box 1450
Alexandria, VA 22313-1450
www.uspto.gov

BROWDY AND NEIMARK, PLLC
1625 K STREET NW, SUITE 1100
WASHINGTON, DC 20006

MAILED
AUG 01 2011
OFFICE OF PETITIONS

In re Application of :
Yehuda BINDER :
Application No. 11/790,555 : DECISION GRANTING PETITION
Filed: April 26, 2007 : UNDER 37 CFR 1.313(c)(2)
Attorney Docket No. **BINDER15O** :

This is a decision on the petition under 37 CFR 1.313(c)(2), filed August 1, 2011, to withdraw the above-identified application from issue after payment of the issue fee.

The petition is **GRANTED**.

The above-identified application is withdrawn from issue for consideration of a submission under 37 CFR 1.114 (request for continued examination). *See* 37 CFR 1.313(c)(2).

Petitioner is advised that the issue fee paid on May 3, 2011 cannot be refunded. If, however, this application is again allowed, petitioner may request that it be applied towards the issue fee required by the new Notice of Allowance.[1]

Telephone inquiries should be directed to the undersigned at (571) 272-7253.

This application is being referred to Technology Center AU 2471 for processing of the request for continued examination under 37 CFR 1.114 and for consideration of the concurrently filed information disclosure statement.

/Monica A. Graves/
Petitions Examiner, Office of Petitions

[1] *The request to apply the issue fee to the new Notice may be satisfied by completing and returning the new Part B – Fee(s) Transmittal Form (along with any balance due at the time of submission). Petitioner is advised that the Issue Fee Transmittal Form* ***must*** *be completed and timely submitted to avoid abandonment of the application.*

SPE RESPONSE FOR CERTIFICATE OF CORRECTION

Paper No.:20110126

DATE : January 26, 2011

TO SPE OF : ART UNIT 3662

SUBJECT : Request for Certificate of Correction on Patent No.: 7515098

A response is requested with respect to the accompanying request for a certificate of correction.

Please complete this form and return with file, within **7** days to:
Certificates of Correction Branch - PK 3-910
Palm location **7590** - Tel. No. 305-8201

With respect to the change(s) requested, correcting Office and/or Applicant's errors, should the patent read as shown in the certificate of correction? No new matter should be introduced, nor should the scope or meaning of the claims be changed.

Thank You For Your Assistance **Certificates of Correction Branch**

The request for issuing the above-identified correction(s) is hereby:
Note your decision on the appropriate box.

☒ **Approved** **All** changes apply.

☐ **Approved in Part** Specify below which changes **do not** apply.

☐ **Denied** State the reasons for denial below.

Comments:

SPE: /Thomas H. Tarcza/ **Art Unit** 3662

UNITED STATES PATENT AND TRADEMARK OFFICE

Commissioner for Patents
United States Patent and Trademark Office
P.O. Box 1450
Alexandria, VA 22313-1450
www.uspto.gov

MILES & STOCKBRIDGE PC
1751 PINNACLE DRIVE
SUITE 500
MCLEAN VA 22102-3833

MAILED
JAN 31 2011
OFFICE OF PETITIONS

In re Application of	:	
Tomoyhuki Ishii et al	:	
Application No. 11/790,590	:	DECISION GRANTING PETITION
Filed: April 26, 2007	:	UNDER 37 CFR 1.313(c)(2)
Attorney Docket No. XA-10796	:	

This is a decision on the petition under 37 CFR 1.313(c)(2), filed January 28, 2011, to withdraw the above-identified application from issue after payment of the issue fee.

The petition is **GRANTED**.

The above-identified application is withdrawn from issue for consideration of a submission under 37 CFR 1.114 (request for continued examination). *See* 37 CFR 1.313(c)(2).

Petitioner is advised that the issue fee paid on January 5, 2011 cannot be refunded. If, however, this application is again allowed, petitioner may request that it be applied towards the issue fee required by the new Notice of Allowance.[1]

Telephone inquiries should be directed to the undersigned at (571) 272-3208.

This application is being referred to Technology Center AU 2827 for processing of the request for continued examination under 37 CFR 1.114 and for consideration of the concurrently filed IDS.

/Karen Creasy/
Karen Creasy
Petitions Examiner
Office of Petitions

[1] *The request to apply the issue fee to the new Notice may be satisfied by completing and returning the new Part B – Fee(s) Transmittal Form (along with any balance due at the time of submission). Petitioner is advised that the Issue Fee Transmittal Form* ***must*** *be completed and timely submitted to avoid abandonment of the application.*

UNITED STATES PATENT AND TRADEMARK OFFICE

Commissioner for Patents
United States Patent and Trademark Office
P.O. Box 1450
Alexandria, VA 22313-1450
www.uspto.gov

FINNEGAN HENDERSON FARABOW GARRETT & DUNNER
LLP
901 NEW YORK AVENUE NW
WASHINGTON DC 20001-4413

MAILED
JUN 20 2011
OFFICE OF PETITIONS

In re	: DECISION ON APPLICATION
Bando, et al.	: FOR PATENT TERM ADJUSTMENT
Application No. 11/790,606	: AND NOTICE OF INTENT
Filed: April 26, 2007	: TO ISSUE
Patent No. 7,910,589	: CERTIFICATE OF CORRECTION
Issued: March 22, 2011	:

This is a decision on the "APPLICATION FOR PATENT TERM ADJUSTMENT - POST GRANT", filed May 20, 2011. Patentees request that the patent term adjustment under 35 U.S.C. 154(b) be corrected from five hundred seventy-seven (577) days to six hundred ninety-seven (697) days.

The application for patent term adjustment is **GRANTED**.

The Patent Term Adjustment indicated in the patent is to be corrected by issuance of a certificate of correction showing a revised Patent Term Adjustment of **six hundred ninety-seven (697) days**.

On August 27, 2010, the Office mailed the Determination of Patent Term Adjustment under 35 U.S.C. 154(b) in the instant application. The Notice stated that the patent term adjustment (PTA) to date was three hundred eighty-seven (387) days. On November 15, 2010, Applicants filed a "NOTICE OF POSSIBLE ERROR IN THE DETERMINATION OF PATENT TERM ADJUSTMENT", which was a candor letter indicating that the 387 days of patent term accorded was thought to be longer than appropriate. On March 22, 2011, the application issued into Patent No. 7,910,589, with a patent term adjustment of five hundred seventy-seven (577) days.

A review of the file reveals that Applicants were assessed delay of one hundred twenty (120) days for filing the "NOTICE OF POSSIBLE ERROR IN THE DETERMINATION OF PATENT TERM ADJUSTMENT" on November 15, 2010. Pursuant to 37 C.F.R. § 1.704(e), the submission of an application for patent term adjustment will not be considered a failure to engage in reasonable efforts to conclude prosecution of the application. Likewise, the submission of a candor letter will not be considered a failure to engage in reasonable efforts to conclude prosecution of the application. Accordingly, zero (0) days should have been assessed for this filing.

In view thereof, the correct determination of patent term adjustment is six hundred ninety-seven (697) days (870 (533+7+330) days of PTO delay, reduced by 166 (91+55+20) days of applicant delay and 7 days of overlap).

The $200 fee has been charged to Deposit Account No. 06-0916, as authorized. Petitioner's request for waiver of this fee is dismissed, as the fee is required for the Office's consideration of the application for patent term adjustment.

The application is being forwarded to the Certificate of Corrections Branch for issuance of a certificate of correction, indicating a Patent Term Adjustment of **six hundred ninety-seven (697) days**.

Telephone inquiries specific to this matter should be directed to Cliff Congo, Petitions Attorney, at (571)272-3207.

Anthony Knight
Director
Office of Petitions

Enclosure: draft Certificate of Correction

UNITED STATES PATENT AND TRADEMARK OFFICE

DRAFT CERTIFICATE OF CORRECTION

PATENT : 7,910,589 B2

DATED : **April 26, 2007**

INVENTOR(S) : Bando et al.

It is certified that error appears in the above-identified patent and that said Letters Patent is hereby corrected as shown below:

On the cover page,

[*] Notice: Subject to any disclaimer, the term of this patent is extended or adjusted under 35 USC 154(b) by 577 days.

Delete the phrase "by 577 days" and insert – by 697 days--

UNITED STATES PATENT AND TRADEMARK OFFICE

Commissioner for Patents
United States Patent and Trademark Office
P.O. Box 1450
Alexandria, VA 22313-1450
www.uspto.gov

KLEIN, O'NEILL & SINGH, LLP
18200 VON KARMAN AVENUE
SUITE 725
IRVINE CA 92612

MAILED
DEC 19 2011
OFFICE OF PETITIONS

In re Application of	:	
Jiang	:	
Application No. 11/790,650	:	NOTICE
Filed: April 26, 2007	:	
Attorney Docket No. 1291-056.101	:	

This is a notice regarding your request for acceptance of a fee deficiency submission under 37 CFR 1.28(c), filed November 10, 2011.

The Office no longer investigates or rejects original or reissue applications under 37 CFR 1.56. **1098 Off. Gaz. Pat. Office 502 (January 3, 1989)**. Therefore, nothing in this Notice is intended to imply that an investigation was done.

Your fee deficiency submission under 37 CFR 1.28 is hereby **ACCEPTED**.

This application is no longer entitled to small entity status. Accordingly, all future fees paid in this application must be paid at the large entity rate.

Inquiries related to this communication should be directed to the undersigned at (571) 272-3230.

Shirene Willis Brantley
Senior Petitions Attorney
Office of Petitions

SPE RESPONSE FOR CERTIFICATE OF CORRECTION

Paper No.: _____

DATE : 02/19/11

TO SPE OF : ART UNIT 3729

SUBJECT : Request for Certificate of Correction for Appl. No.: 11790732 Patent No.: 7832069

CofC mailroom date: 02/10/11

Please respond to this request for a certificate of correction within 7 days.

FOR IFW FILES:

Please review the requested changes/corrections as shown in the **COCIN** document(s) in the IFW application image. No new matter should be introduced, nor should the scope or meaning of the claims be changed.

Please complete the response (see below) and forward the completed response to scanning using document code **COCX**.

FOR PAPER FILES:

Please review the requested changes/corrections as shown in the attached certificate of correction. Please complete this form (see below) and forward it with the file to:

Certificates of Correction Branch (CofC)
Randolph Square – 9D10-A
Palm Location 7580
[redacted]

Certificates of Correction Branch

Lamonte Newsome

Certificates of Correction Branch
571-272-3421

Thank You For Your Assistance

The request for issuing the above-identified correction(s) is hereby:
Note your decision on the appropriate box.

X	**Approved**	**All** changes apply.
☐	**Approved in Part**	Specify below which changes **do not** apply.
☐	**Denied**	State the reasons for denial below.

Comments: Approved

SPE RESPONSE FOR CERTIFICATE OF CORRECTION

/Derris H. Banks/

SPE

Art Unit

3729

UNITED STATES PATENT AND TRADEMARK OFFICE

Commissioner for Patents
United States Patent and Trademark Office
P.O. Box 1450
Alexandria, VA 22313-1450
www.uspto.gov

NIXON & VANDERHYE, PC
901 NORTH GLEBE ROAD, 11TH FLOOR
ARLINGTON VA 22203

MAILED
NOV 17 2010
OFFICE OF PETITIONS

In re Application of	:	
Gainer et al.	:	
Application No. 11/790,779	:	ON PETITION
Filed: April 27, 2007	:	
Attorney Docket No. DMB-4112-49	:	

This is a decision on the petition under 37 CFR 1.102(c)(1), filed October 27, 2010, to make the above-identified application special based on applicant's age as set forth in M.P.E.P. § 708.02, Section IV.

The petition is **GRANTED**.

A grantable petition to make an application special under 37 CFR 1.102(c)(1) and MPEP § 708.02, Section IV: Applicant's Age must be accompanied by evidence showing that at least one of the applicants is 65 years of age, or more, such as a birth certificate or a statement by applicant. No fee is required.

The instant petition includes a statement from the applicant's attorney. Accordingly, the above-identified application has been accorded "special" status.

Telephone inquiries concerning this decision should be directed to the undersigned at 571-272-3206. All other inquiries concerning either the examination or status of the application should be directed to the Technology Center.

This matter is being referred to the Technology Center Art Unit 1621 for action on the merits commensurate with this decision.

Liana Walsh
Petitions Examiner
Office of Petitions

SPE RESPONSE FOR CERTIFICATE OF CORRECTION

Paper No.:20100811

DATE : August 10, 2010

TO SPE OF : ART UNIT 2884

SUBJECT : Request for Certificate of Correction on Patent No.: 7,653,332

A response is requested with respect to the accompanying request for a certificate of correction.

Please complete this form and return with file, within **7** days to:
Certificates of Correction Branch - ST (South Tower) 9A22
Palm location **7590** - Tel. No. (703) 305-8309

With respect to the change(s) requested, correcting Office and/or Applicant's errors, should the patent read as shown in the certificate of correction? No new matter should be introduced, nor should the scope or meaning of the claims be changed.

Thank You For Your Assistance **Certificates of Correction Branch**

The request for issuing the above-identified correction(s) is hereby:

Note your decision on the appropriated box.

☐ **Approved** All changes apply.

☐ **Approved in Part** Specify below which changes **do not** apply.

☒ **Denied** State the reasons for denial below.

Comments:

Due to the renumbering of claims, there is a slight confusion between the original claims and the printed claims. Attached contains an interview summary form detailing the conversation with the attorney.

/David P. Porta/
Supervisory Patent Examiner, Art Unit 2884

SPE RESPONSE FOR CERTIFICATE OF CORRECTION

Paper No.: _____

DATE : 10/08/10

TO SPE OF : ART UNIT 2471

SUBJECT : Request for Certificate of Correction for Appl. No.: 11790842 Patent No.: 7764700

Please respond to this request for a certificate of correction within 7 days.

FOR IFW FILES:

Please review the requested changes/corrections as shown in the **COCIN** document(s) in the IFW application image. No new matter should be introduced, nor should the scope or meaning of the claims be changed.

Please complete the response (see below) and forward the completed response to scanning using document code **COCX**.

FOR PAPER FILES:

Please review the requested changes/corrections as shown in the attached certificate of correction. Please complete this form (see below) and forward it with the file to:

Certificates of Correction Branch (C of C)
Randolph Square 9D40-D
Palm Location 7580
You can fax the Directors/SPE response to 571-270-9990

Lamonte Newsome
Certificates of Correction Branch
571-272-3421

Thank You For Your Assistance

The request for issuing the above-identified correction(s) is hereby:
Note your decision on the appropriate box.

- ☒ **Approved** — **All** changes apply.
- ☐ **Approved in Part** — Specify below which changes **do not** apply.
- ☐ **Denied** — State the reasons for denial below.

Comments: _____

_____

_____

_____

_____

[signature] 10/14/10
SPE **Art Unit**

UNITED STATES PATENT AND TRADEMARK OFFICE

Commissioner for Patents
United States Patent and Trademark Office
P.O. Box 1450
Alexandria, VA 22313-1450
www.uspto.gov

BIRCH STEWART KOLASCH & BIRCH
PO BOX 747
FALLS CHURCH VA 22040-0747

MAILED
JAN 24 2011
OFFICE OF PETITIONS

In re Patent No. 7,486,033 :
Issue Date: 3 February, 2009 :
Application No. 11/790,872 : DECISION
Filed/Deposited: 27 April, 2007 :
Attorney Docket No.: 0698-0284PUS1

This is a decision on the petition filed on 18 August, 2010, requesting issuance of duplicate Letters Patent for the above-identified patent/application and considered pursuant to 37 C.F.R. §1.182.[1]

The petition is **GRANTED.**

BACKGROUND

Petitioner has made demand upon the Office to issue duplicate Letters Patent in the instant matter.

Petitioner has indicated that the patent was not received[1] and/or cannot be located, and has authorized the charge of fees to a deposit account, previously charged.

The Publishing Division is directed to issue duplicate Letters Patent.

A copy of this decision is being forwarded to Publishing Division for issuance of duplicate Letters Patent.

---

[1] The regulations at 37 C.F.R. §1.182 provide:
§ 1.182 Questions not specifically provided for.
All situations not specifically provided for in the regulations of this part will be decided in accordance with the merits of each situation by or under the authority of the Commissioner, subject to such other requirements as may be imposed, and such decision will be communicated to the interested parties in writing. Any petition seeking a decision under this section must be accompanied by the petition fee set forth in § 1.17(h). [47 Fed. Reg. 41278, Sept. 17, 1982; effective date Oct. 1, 1982; revised, 62 Fed. Reg. 53131, Oct. 10, 1997, effective Dec. 1, 1997]

[1] For guidance on the proper showing for an allegation/averment of "non-receipt" Petitioners' attentions always are directed to the Commentary at MPEP §711.03(c)(I).

The file is being released to the IFW Repository.

Any questions regarding the issuance of the duplicate Letters Patent should be directed to Ms. Naomi Farmer, RSQ, Fax: 571-270-9753.

While telephone inquiries regarding this decision may be directed to the undersigned at (571) 272-3214, it is noted that all practice before the Office is in writing (see: 37 C.F.R. §1.2[4]) and the proper authority for action on any matter in this regard are the statutes (35 U.S.C.), regulations (37 C.F.R.) and the commentary on policy (MPEP). Therefore, no telephone discussion may be controlling or considered authority for Petitioner's action(s)/inaction.

/John J. Gillon, Jr./
John J. Gillon, Jr.
Senior Attorney
Office of Petitions

CC:
MS. NIOMI FARMER
RSQ—9TH FLOOR—ROOM D 30-B
FAX NO. (571) 270-9753

---

[4] The regulations at 37 C.F.R. §1.2 provide:

§1.2 Business to be transacted in writing.

All business with the Patent and Trademark Office should be transacted in writing. The personal attendance of applicants or their attorneys or agents at the Patent and Trademark Office is unnecessary. The action of the Patent and Trademark Office will be based exclusively on the written record in the Office. No attention will be paid to any alleged oral promise, stipulation, or understanding in relation to which there is disagreement or doubt.

UNITED STATES PATENT AND TRADEMARK OFFICE

COMMISSIONER FOR PATENTS
UNITED STATES PATENT AND TRADEMARK OFFICE
P.O. BOX 1450
ALEXANDRIA, VA 22313-1450
WWW.USPTO.GOV

Paper No.

MAILED

DEC 06 2010

OFFICE OF PETITIONS

Gideon Samid
13 Tapiola Ct.
Rockville MD 20850

In re Application of	:	
Gideon Samid	:	
Application No. 11/790,876	:	DECISION ON PETITION
Filed: April 27, 2007	:	PURSUANT TO 37 C.F.R.
Title: BIPSA: AN INFERENTIAL	:	§ 1.137(B)
METHODOLOGY AND A COMPUTATIONAL	:	
TOOL	:	

This is a decision on the petition pursuant to 37 C.F.R. § 1.137(b) to revive the above-identified application, filed on July 29, 2010.

This petition pursuant to 37 C.F.R. § 1.137(a) is **DISMISSED.**

The above-identified application became abandoned for failure to reply in a timely manner to the Notice of Missing Parts (notice), mailed May 21, 2007, which set a shortened statutory period for reply of two months. No response was received, and no extensions of time under the provisions of 37 C.F.R. § 1.136(a) were requested. Accordingly, the above-identified application became abandoned on July 22, 2007. A notice of abandonment was mailed on January 16, 2009.

An original petition pursuant to 37 C.F.R. § 1.181(a) was filed on January 23, 2009, and was dismissed via the mailing of a decision on March 6, 2009.

A renewed petition pursuant to 37 C.F.R. § 1.181(a) was filed on May 4, 2009, and was dismissed via the mailing of a decision on June 1, 2009.

A second renewed petition pursuant to 37 C.F.R. § 1.181(a) was filed on July 31, 2009 (a duplicate of this submission was received on August 3, 2009), and was dismissed via the mailing of a decision on August 19, 2009.

A third renewed petition pursuant to 37 C.F.R. § 1.181(a) was filed on October 19, 2009,[1] and was dismissed via the mailing of a decision on November 23, 2009.

An original petition pursuant to 37 C.F.R. § 1.137(a) was filed on December 31, 2009, and was dismissed via the mailing of a decision on January 29, 2010.

A renewed petition pursuant to 37 C.F.R. § 1.137(a) was filed on June 8, 2010, and was dismissed via the mailing of a decision on June 28, 2010.

A grantable petition pursuant to 37 C.F.R. § 1.137(b) must be accompanied by:

(1) The reply required to the outstanding Office action or notice, unless previously filed;
(2) The petition fee as set forth in 37 C.F.R. § 1.17(m);
(3) A statement that the entire delay in filing the required reply from the due date for the reply until the filing of a grantable petition pursuant to this paragraph was unintentional. The Commissioner may require additional information where there is a question whether the delay was unintentional, and;
(4) Any terminal disclaimer (and fee as set forth in 37 C.F.R. § 1.20(d)) required pursuant to paragraph (d) of this section.

With this petition, Petitioner has submitted the petition fee and the proper statement of unintentional delay.

Requirements (2) and (3) of Rule 1.137(b) have been met. The fourth requirement of Rule 1.137(b) is not applicable, as a terminal disclaimer is not required.[2]

Regarding the first requirement, the requirement has not been satisfied because Petitioner did not submit the required reply to the Office action. The required reply is a reply which would have been sufficient to have avoided abandonment, had such reply been timely filed.[3] In order for the application to be revived, petitioner must submit a reply which satisfies 37 C.F.R.

---

1 A duplicate of this submission was received on October 21, 2009.
2 See Rule 1.137(d).
3 See M.P.E.P. 711.03(c).

§ 1.137(b)(1): **the fee associated with the submission of three independent claims over three.**

Any reply must be submitted within **TWO MONTHS** from the mail date of this decision. Extensions of time under 37 C.F.R. § 1.136(a) are permitted. The reply should include a cover letter entitled "Renewed Petition Under 37 C.F.R. § 1.137(b)." This is not a final agency action within the meaning of 5 U.S.C § 704.

The renewed petition should indicate in a prominent manner that the attorney handling this matter is Paul Shanoski, and may be submitted by mail,[4] hand-delivery,[5] or facsimile.[6] Registered users of EFS-Web may alternatively submit a response to this decision via EFS-Web.[7]

If responding by mail, Petitioner is advised not to place the undersigned's name on the envelope. Only the information that appears in the footnote should be included - adding anything else to the address will delay the delivery of the response to the undersigned.

Telephone inquiries regarding *this decision* should be directed to the undersigned at (571) 272-3225.[8]

It is noted in passing that Petitioner deposited six claims on filing, each of which is independent. Consequently, the notice of May 21, 2007 indicated that $300 was owed, for three independent claims over three. In section 2(A) of this petition, Petitioner has indicated that no additional fee is required, pursuant to the amendment of "December 30, 2009." A review of the electronic file indicates that on December 31, 2009, two additional independent claims were deposited. This amendment cannot be entered, as it does not comply with 37 C.F.R. § 1.121(a).

It appears that with the amendment of December 31, 2009, Petitioner attempted to cancel the claims that were present on

---

4 Mail Stop Petition, Commissioner for Patents, United States Patent and Trademark Office, P.O. Box 1450, Alexandria, VA, 22313-1450.
5 Customer Window, Randolph Building, 401 Dulaney Street, Alexandria, VA, 22314.
6 (571) 273-8300- please note this is a central facsimile number.
7 https://sportal.uspto.gov/authenticate/authenticateuserlocalepf.html
8 Petitioner will note that all practice before the Office should be in writing, and the action of the Office will be based exclusively on the written record in the Office. See 37 C.F.R. § 1.2. As such, Petitioner is reminded that no telephone discussion may be controlling or considered authority for any further action(s) of Petitioner.

filing and replace them with a re-written version so as to reduce the number of total independent claims present in the application. However, Petitioner did not make this amendment properly, and as such, effectively added two new independent claims to the application (had the petition been able to have been entered).

Prior to filing any response to this decision, Petitioner may wish to review 37 C.F.R. § 1.121(c), which may be viewed here: http://www.uspto.gov/web/offices/pac/mpep/documents/appxr_1_121.htm#cfr37s1.121

/Paul Shanoski/
Paul Shanoski
Senior Attorney
Office of Petitions

UNITED STATES PATENT AND TRADEMARK OFFICE

Commissioner for Patents
United States Patent and Trademark Office
P.O. Box 1450
Alexandria, VA 22313-1450
www.uspto.gov

Paper No.

MAILED

JUN 03 2011

OFFICE OF PETITIONS

Gideon Samid
13 Tapiola Ct.
Rockville MD 20850

In re Application of	:	
Gideon Samid	:	
Application No. 11/790,876	:	DECISION ON RENEWED PETITION
Filed: April 27, 2007	:	PURSUANT TO 37 C.F.R.
Title: BIPSA: AN INFERENTIAL	:	§ 1.137(B)
METHODOLOGY AND A COMPUTATIONAL	:	
TOOL	:	

This is a decision on the renewed petition pursuant to 37 C.F.R. § 1.137(b) to revive the above-identified application, filed on February 7, 2011.

This renewed petition pursuant to 37 C.F.R. § 1.137(b) is **DISMISSED.**

The above-identified application became abandoned for failure to reply in a timely manner to the Notice of Missing Parts (notice), mailed May 21, 2007, which set a shortened statutory period for reply of two months. No response was received, and no extensions of time under the provisions of 37 C.F.R. § 1.136(a) were requested. Accordingly, the above-identified application became abandoned on July 22, 2007. A notice of abandonment was mailed on January 16, 2009.

An original petition pursuant to 37 C.F.R. § 1.181(a) was filed on January 23, 2009, and was dismissed via the mailing of a decision on March 6, 2009.

A renewed petition pursuant to 37 C.F.R. § 1.181(a) was filed on May 4, 2009, and was dismissed via the mailing of a decision on June 1, 2009.

A second renewed petition pursuant to 37 C.F.R. § 1.181(a) was filed on July 31, 2009 (a duplicate of this submission was

received on August 3, 2009), and was dismissed via the mailing of a decision on August 19, 2009.

A third renewed petition pursuant to 37 C.F.R. § 1.181(a) was filed on October 19, 2009,[1] and was dismissed via the mailing of a decision on November 23, 2009.

An original petition pursuant to 37 C.F.R. § 1.137(a) was filed on December 31, 2009, and was dismissed via the mailing of a decision on January 29, 2010.

A renewed petition pursuant to 37 C.F.R. § 1.137(a) was filed on June 8, 2010, and was dismissed via the mailing of a decision on June 28, 2010.

A grantable petition pursuant to 37 C.F.R. § 1.137(b) must be accompanied by:

(1) The reply required to the outstanding Office action or notice, unless previously filed;
(2) The petition fee as set forth in 37 C.F.R. § 1.17(m);
(3) A statement that the entire delay in filing the required reply from the due date for the reply until the filing of a grantable petition pursuant to this paragraph was unintentional. The Commissioner may require additional information where there is a question whether the delay was unintentional, and;
(4) Any terminal disclaimer (and fee as set forth in 37 C.F.R. § 1.20(d)) required pursuant to paragraph (d) of this section.

An original petition pursuant to 37 C.F.R. § 1.137(b) was filed on July 29, 2010, along with the petition fee and the proper statement of unintentional delay, and was dismissed via the mailing of a decision on December 6, 2010, which indicated that requirements (2) and (3) of Rule 1.137(b) have been met and that the fourth requirement of Rule 1.137(b) is not applicable, as a terminal disclaimer is not required.[2] The decision set forth, *in pertinent part*:

> "Regarding the first requirement, the requirement has not been satisfied because Petitioner did not submit the required reply to the Office action. The required reply is a reply which would

1 A duplicate of this submission was received on October 21, 2009.
2 See Rule 1.137(d).

> have been sufficient to have avoided abandonment, had such reply been timely filed.[3] In order for the application to be revived, petitioner must submit a reply which satisfies 37 C.F.R. § 1.137(b)(1): **the fee associated with the submission of three independent claims over three** (emphasis included).
>
> ...
>
> It is noted in passing that Petitioner deposited six claims on filing, each of which is independent. Consequently, the notice of May 21, 2007 indicated that $300 was owed, for three independent claims over three. In section 2(A) of this petition, Petitioner has indicated that no additional fee is required, pursuant to the amendment of "December 30, 2009." A review of the electronic file indicates that on December 31, 2009, two additional independent claims were deposited. This amendment cannot be entered, as it does not comply with 37 C.F.R. § 1.121(a).
>
> It appears that with the amendment of December 31, 2009, Petitioner attempted to cancel the claims that were present on filing and replace them with a re-written version so as to reduce the number of total independent claims present in the application. However, Petitioner did not make this amendment properly, and as such, effectively added two new independent claims to the application (had the petition been able to have been entered)."
>
> Decision on the original petition pursuant to 37 C.F.R. § 1.137(b), pages 2-4.

With this renewed petition, it appears that Petitioner has attempted to cancel the claims that were present on filing and replace them with three independent method claims, so as to obviate the need for the fee associated with the filing of independent claims in excess of three. **This amendment cannot be entered, as it fails to comply with 37 C.F.R. §§ 1.121(a) and 1.121(c).**

The first requirement of Rule 1.137(b) has not been satisfied because Petitioner did not submit the required reply to the Office action. The required reply is a reply which would have been sufficient to have avoided abandonment, had such reply been timely filed.[4] In order for the application to be revived, Petitioner must submit a reply which satisfies 37 C.F.R. § 1.137(b)(1): **the fee associated with the submission of three independent claims over three.**

---

3 See M.P.E.P. § 711.03(c).

4 See M.P.E.P. § 711.03(c).

Any reply must be submitted within **TWO MONTHS** from the mail date of this decision. Extensions of time under 37 C.F.R. § 1.136(a) are permitted. The reply should include a cover letter entitled "Second Renewed Petition Under 37 C.F.R. § 1.137(b)." This is not a final agency action within the meaning of 5 U.S.C § 704.

The renewed petition should indicate in a prominent manner that the attorney handling this matter is Paul Shanoski, and may be submitted by mail,[5] hand-delivery,[6] or facsimile.[7] Registered users of EFS-Web may alternatively submit a response to this decision via EFS-Web.[8]

If responding by mail, Petitioner is advised not to place the undersigned's name on the envelope. Only the information that appears in the footnote should be included - adding anything else to the address will delay the delivery of the response to the undersigned.

Telephone inquiries regarding *this decision* should be directed to the undersigned at (571) 272-3225.[9]

Prior to filing any response to this decision, Petitioner may wish to review 37 C.F.R. §§ 1.121(a) and 1.121(c), which may be viewed here:
http://www.uspto.gov/web/offices/pac/mpep/documents/appxr_1_121.htm#cfr37s1.121

/Paul Shanoski/
Paul Shanoski
Senior Attorney
Office of Petitions

---

5 Mail Stop Petition, Commissioner for Patents, United States Patent and Trademark Office, P.O. Box 1450, Alexandria, VA, 22313-1450.
6 Customer Window, Randolph Building, 401 Dulaney Street, Alexandria, VA, 22314.
7 (571) 273-8300- please note this is a central facsimile number.
8 https://sportal.uspto.gov/authenticate/authenticateuserlocalepf.html
9 Petitioner will note that all practice before the Office should be in writing, and the action of the Office will be based exclusively on the written record in the Office. See 37 C.F.R. § 1.2. As such, Petitioner is reminded that no telephone discussion may be controlling or considered authority for any further action(s) of Petitioner.

UNITED STATES PATENT AND TRADEMARK OFFICE

Commissioner for Patents
United States Patent and Trademark Office
P.O. Box 1450
Alexandria, VA 22313-1450
www.uspto.gov

Paper No.

LOWE HAUPTMAN
HAM & BERNER, LLP
1700 DIAGONAL ROAD
SUITE 300
ALEXANDRIA VA 22314

MAILED
MAR 28 2011
OFFICE OF PETITIONS

In re Application of	:	
Chien-Pin Huang	:	DECISION ON PETITION
Application No. 11/790,881	:	
Filed: April 27, 2007	:	
Atty Docket No. 4647-080	:	

This is in response to the paper styled REQUEST FOR WITHDRAWAL OF HOLDING OF ABANDONMENT - NO ABANDONMENT IN FACT filed January 31, 2011.

The above-identified application became abandoned for failure to timely or properly reply to the restriction requirement mailed July 23, 2009. The Office action set a three (3) month shortened statutory period for reply, with extensions of time obtainable under the provisions of § 1.136(a). No reply considered filed and no extension of time considered obtained, the application became abandoned effective October 24, 2009. A courtesy Notice of Abandonment was mailed on February 1, 2010.

In response, applicants filed the instant petition. Applicants maintain that there was no abandonment in fact as the response was timely filed on August 24, 2009. In support thereof, applicants submit a copy of the response as originally filed. Further, applicants point out that receipt of the response by the USPTO is confirmed by its presence in the electronic record of the application.

Petitioner's evidence has been reviewed, and is persuasive. However, consideration of their evidence is unnecessary. Their response is present in the application with a date of receipt of August 24, 2009.

Accordingly, the holding of abandonment is hereby **WITHDRAWN**.

The petition under § 1.181 is **GRANTED**.

No fee is required on petition under § 1.181.

Technology Center AU 2841 has been advised of this decision. The application is, thereby, forwarded to the Technology Center's technical staff to withdraw the holding of abandonment, and for forwarding to the examiner for consideration of the election timely filed August 24, 2009.

Telephone inquiries specific to this decision should be directed to the undersigned at (571) 272-3219.

Nancy Johnson
Senior Petitions Attorney
Office of Petitions

UNITED STATES PATENT AND TRADEMARK OFFICE

Commissioner for Patents
United States Patent and Trademark Office
P.O. Box 1450
Alexandria, VA 22313-1450
www.uspto.gov

STAAS & HALSEY LLP
SUITE 700
1201 NEW YORK AVENUE, N.W.
WASHINGTON DC 20005

MAILED

JAN 30 2012

OFFICE OF PETITIONS

In re Patent No. 7,872,202 :
Issued: 01/18/2011 :
Application No. 11/790,900 : DECISION ON PETITION
Filed: 04/27/2007 :
Attorney Docket No. 1937.1092 :

This is a decision on the petition under 37 CFR 1.55(c), filed December 30, 2011, which is being treated as a petition under 37 CFR 1.55(a)(2). Petitioners request entry of the certified copy of Korean application 10-2006-0038138, submitted after the date of payment of the issue fee but prior to the date of grant of the above-identified patent, as well as issuance of a certificate of correction.

As stated in MPEP 201.14(a), the Office will permit the filing of a claim for foreign priority or a certified copy of a foreign application, accompanied by the processing fee set forth in 37 CFR 1.17(i), between the date the issue fee is paid and the date the patent is issued. The priority claim or certified copy will be placed in the file record; however, there will be no review of the papers and the patent when published will not include the priority claim. A certificate of correction under 35 U.S.C. 255 and 37 CFR 1.323 can be filed to have the priority claim or certified copy considered after publication of the patent.

In this instance, the record reveals that petitioners made a timely claim for foreign priority. Furthermore, petitioners submitted the certified copy of the Korean application 10-2006-0038138 with the present petition on December 30, 2011, after the date of payment of the issue fee but prior to the date of grant of the above-identified patent. The present petition is also accompanied by a $1,410.00 petition fee, a request for a certificate of correction, a completed certificate of correction form, a $100.00 certificate of correction fee, and an authorization to charge any necessary fees to the Deposit Account.

Accordingly, the petition is **GRANTED**.

The Office acknowledges receipt of the certified copy of Korean application 10-2006-0038138. The certified copy of the foreign application is accepted and will be placed in the filed record but will not be reviewed as indicated in MPEP 201.14(a).

As petitioners made a timely claim for foreign priority, the $1,410.00 petition fee is unnecessary and will be refunded in due course. The Office will charge the Deposit Account for the $130.00 processing fee set forth in 37 CFR 1.17(i).

This matter is being referred to the Certificate of Correction branch for issuance of the certificate of correction.

Any questions concerning the issuance of a Certificate of Correction should be directed to the Certificate of Corrections Branch. Any questions concerning this decision should be directed to the undersigned at (571) 272-3211.

Christina T. Donnell

Christina Tartera Donnell
Senior Petitions Attorney
Office of Petitions

UNITED STATES PATENT AND TRADEMARK OFFICE

Commissioner for Patents
United States Patent and Trademark Office
P.O. Box 1450
Alexandria, VA 22313-1450
www.uspto.gov

April 20, 2011

MARTIN D. MOYNIHAN d/b/a PRTSI, INC.
P.O. BOX 16446
ARLINGTON VA 22215

In re Application of	:	
Yoseph Shaaltiel, et al	:	**DECISION ON PETITION**
Application No. 11790991	:	
Filed: 04/30/2007	:	***ACCEPTANCE OF COLOR***
Attorney Docket No. **39244**	:	***DRAWINGS***

This is a decision on the Petition to Accept Color Drawings under 37 C.F.R 1.84 (a) (2), received in the United States Patent and Trademark Office (USPTO) August 16, 2007.

The petition is **GRANTED**.

A grantable petition under 37 C.F.R. 1.84(a) (2) must be accompanied by the following.

1. The fee set forth under 37 C.F.R. 1.17(h),
2. Three (3) sets of the color drawings in question, or (1) set if filed via EFS, and
3. The specification contains appropriate language referring to the color drawings as the first paragraph in that portion of the specification relating to the brief description of the drawings.

The petition was accompanied by all of the required fees and drawings. The specification contains the appropriate language. Therefore, the petition is GRANTED.

Telephone inquires relating to this decision may be directed to the undersigned in the Office of Data Management at 571-272-4200.

/Laura Feldman/
Quality Control Specialist
Office of Data Management
Publications Branch

UNITED STATES PATENT AND TRADEMARK OFFICE

UNITED STATES DEPARTMENT OF COMMERCE
United States Patent and Trademark Office
Address: COMMISSIONER FOR PATENTS
P.O. Box 1450
Alexandria, Virginia 22313-1450
www.uspto.gov

APPLICATION NO.	FILING DATE	FIRST NAMED INVENTOR	ATTORNEY DOCKET NO.	CONFIRMATION NO.
11/790,991	04/30/2007	Yoseph Shaaltiel	39244	4162

7590 04/21/2011
MARTIN D. MOYNIHAN d/b/a PRTSI, INC.
P.O. BOX 16446
ARLINGTON, VA 22215

EXAMINER
FRONDA, CHRISTIAN L

ART UNIT	PAPER NUMBER
1652	

MAIL DATE	DELIVERY MODE
04/21/2011	PAPER

ACKNOWLEDGEMENT OF REQUEST

Notice of Allowance/Allowability Mailed

The request to print a color drawing reference as the first paragraph in the portion of the specification containing a brief description of the drawings as required by 37 CFR 1.84 and MPEP § 608.02 has been received by the United States Patent and Trademark Office and will be entered into the specification.

571-272-4200 or 1-888-786-0101
Application Assistance Unit
Office of Data Management

FORM PTOM327-5 (Rev. 02/08)

UNITED STATES PATENT AND TRADEMARK OFFICE

Commissioner for Patents
United States Patent and Trademark Office
P.O. Box 1450
Alexandria, VA 22313-1450
www.uspto.gov

MAILED

OCT 22 2010

PCT LEGAL ADMINISTRATION

NOVO NORDISK, INC.
INTELLECTUAL PROPERTY DEPARTMENT
100 COLLEGE ROAD WEST
PRINCETON NJ 08540

In re Application of: OLSEN, Helle, Birk, et al. U.S. Application No.: 11/791,064 PCT No.: PCT/EP2005/056105 International Filing Date: 21 November 2005 Priority Date: 22 November 2004 Atty's Docket No.: 6982.204-US For: SOLUABLE, STABLE INSULIN-CONTAINING FORMULATIONS WITH A PROTAMINE SALT	DECISION ON SECOND RENEWED PETITION UNDER 37 CFR 1.47(a)

This decision is issued in response to applicants' "Second Renewed Petition Under 37 CFR § 1.47(a)" filed 23 August 2010. No additional petition fee is required.

BACKGROUND

The procedural background for the present application was set forth in the decisions mailed on 04 August 2009 and 23April 2010. The decisions dismissed without prejudice applicants' petition under 37 CFR 1.47(a) for failure to satisfy all the requirements of a grantable petition. Specifically, applicants had failed to provide an acceptable showing that the non-signing inventor refuses to execute the application or cannot be reached after diligent effort.

On 23 August 2010, applicants filed the "Second Renewed Petition Under 37 CFR § 1.47(a)" considered herein (with required two-month extension fee).

DISCUSSION

The present petition includes a revised statement from Pia E. Nyholm, with additional supporting documents. These materials include a copy, with English translation, of a document issued by the Danish National Registration Office confirming that the address to which applicants have forwarded their signature requests is the current registered address for the non-signing inventor. The present submission, in combination with the materials previously submitted, provides an acceptable showing that the non-signing inventor has refused to execute the application. Applicants have therefore satisfied the final outstanding element of a grantable petition under 37 CFR 1.47(a).

CONCLUSION

Applicants' renewed petition under 37 CFR 1.47(a) is **GRANTED**.

The application is accepted without the signature of non-signing co-inventor Niels Christian KAARSHOLM.

A notice of the acceptance of the application will be published in the Official Gazette, and a letter informing the non-signing inventor of the application will be forwarded to the address of the non-signing inventor, as set forth in the petition.

The application is being referred to the National Stage Processing Branch of the Office of PCT Operations for further processing. The date under 35 U.S.C. 371(c)(1), (c)(2), and (c)(4) is 08 October 2008.

Richard M. Ross
Attorney Advisor
Office of PCT Legal Administration
Telephone: (571) 272-3296
Facsimile: (571) 273-0459

UNITED STATES PATENT AND TRADEMARK OFFICE

Commissioner for Patents
United States Patent and Trademark Office
P.O. Box 1450
Alexandria, VA 22313-1450
www.uspto.gov

Niels Christian KAARSHOLM
Clausholmvej 38
2720 Vanlose
DENMARK

MAILED
OCT 22 2010
PCT LEGAL ADMINISTRATION

In re Application of: OLSEN, Helle, Birk, et al.
U.S. Application No.: 11/791,064
PCT No.: PCT/EP2005/056105
International Filing Date: 21 November 2005
Priority Date: 22 November 2004
Attorney's Docket No.: 6982.204-US
For: SOLUABLE, STABLE INSULIN-CONTAINING FORMULATIONS WITH A PROTAMINE SALT

Dear Mr. KAARSHOLM:

You are identified as an inventor in the above identified United States patent application, filed under the provisions of 37 CFR 1.47(a) and 35 U.S.C. 116. Should a patent be granted, you will be designated as an inventor.

As a named inventor, you are entitled to inspect any paper in the file wrapper of the application, order copies of all or any part thereof (at a prepaid cost per 37 CFR 1.19) or to make your position of record in the application. Alternatively, you may arrange to do any of the preceding through a registered patent agent or attorney presenting written authorization from you. If you care to join the application, counsel of record (see below) would presumably assist you. Joining in the application would entail the filing of an appropriate oath or declaration by you pursuant to 37 CFR 1.63.

Richard M. Ross
Attorney Advisor
Office of PCT Legal Administration
Telephone: (571) 272-3296
Facsimile: (571) 273-0459

Counsel Of Record:
Rosemarie R. Wilk-Orescan
NOVO NORDISK, INC.
INTELLECTUAL PROPERTY DEPARTMENT
100 COLLEGE ROAD WEST
PRINCETON NJ 08540

UNITED STATES PATENT AND TRADEMARK OFFICE

Commissioner for Patents
United States Patent and Trademark Office
P.O. Box 1450
Alexandria, VA 22313-1450
www.uspto.gov

KLARQUIST SPARKMAN, LLP
121 SW SALMON STREET
SUITE 1600
PORTLAND, OR 97204

MAILED

MAR 25 2011

OFFICE OF PETITIONS

Applicant: Ying, et al.
Appl. No.: 11/791,074
Filing Date: May 16, 2007
Title: SCAFFOLD AND METHOD OF FORMING SCAFFOLD BY ENTANGLING FIBRES
Attorney Docket: 6565-78669-01
Pub. No.: US 2009/0069825 A1
Pub. Date: March 12, 2009

This is a decision on the request for a corrected patent application publication entitled "Second Request for Correction of Publication under 37 CFR 1.221(b)," received on May 24, 2010, for the above-identified application, which is being treated as a petition for reconsideration under 37 CFR 1.181.

The petition is dismissed.

The request is dismissed.

Petitioner requests that the application be republished because the patent application publication contains a material mistake claim 13 wherein it improperly depends from claim 1 rather than claim 11. Petitioner asserts that the claim dependency is a material error because the scope of the dependent claim could be considered unclear. Petitioner asserts that the text is not "faint", as a copy of the claims was downloaded from PAIR and the claim could not be read in any other way than to depend from claim 11.

37 CFR 1.52(a)(1)(v) provides that papers submitted to become a part of the USPTO records in the file of a patent application must be presented in a form having sufficient clarity and contrast between the paper and the writing thereon to permit the direct reproduction of readily legible copies in any number by use of photographic, electrostatic, photo-offset, and microfilming processes and electronic capture by use of digital imaging and optical character recognition.

37 CFR 1.181 (f) provides: the mere filing of a petition will not stay any period for reply that may be running against the application, nor act as a stay of other proceedings. Any petition under this part not filed within two months of the mailing date of the action or notice from which relief

is requested may be dismissed as untimely, except as otherwise provided. This two-month period is not extendable.

37 CFR 1.221 (b) is applicable: "only when the Office makes a **material mistake** which is apparent from Office records.... Any request for a corrected publication or revised patent application publication other than provided as provided in paragraph (a) of this section must be filed within two months from the date of the patent application publication. This period is not extendable" A material mistake must affect the public's ability to appreciate the technical disclosure of the patent application publication, to determine the scope of the patent application publication, or to determine the scope of the provisional rights that an applicant may seek to enforce upon issuance of a patent. [1]

Petitioner's second request for corrected publication received on May 24, 2010, in which Petitioner is requesting reconsideration of the prior decision mailed on January 22, 2010 was not timely filed in accordance with 37 CFR 1.181(f).

Furthermore, Petitioner's assertions that the text "11" in claim 13 is not faint as he printed the page of the claims from PAIR and it could be read and that the claim dependency is a material error as it affects the scope of the dependent claim are not persuasive. The rule requires that it is a material mistake which is apparent from the Office records. While petitioner asserts that he could print the page and read it, thus it is not faint. The text of the numeral "11" is uneven and faint, as one "1" is darker than the other and in that one the ink is not dark. The rule requires that the text "must be presented in a form having sufficient clarity and contrast between the paper and the writing thereon to permit the direct reproduction of readily legible copies in any number by use of photographic, electrostatic, photo-offset, and microfilming processes and electronic capture by use of digital imaging and optical character recognition." The text of the numeral is faint such that it did not have sufficient clarity and contrast between the paper and writing to permit electronic capture by use of digital imaging and optical character recognition.

Applicant is advised that he may want to file application papers that are clearer, as the error is due to the quality of the text. The text is faint, which makes it difficult to read and to electronically reproduce by digital imaging and optical character recognition. Applicants have been advised to file applications having cleaner and larger text with sufficient clarity and contrast to permit reproduction, such as electronic reproduction by digital imaging and optical character recognition, which will avoid errors in the patent application publication process. See 37 CFR 1.52(a)(1)(v) and PCT Rule 11.9(d)(1).

With respect to the errors in claims 3, 17 and 28, Petitioner has not presented arguments with respect to those claims.

The applicant is advised that a "request for republication of an application previously published" may be filed under 37 CFR 1.221(a). Such a request for republication "must include a copy of the application compliance with the Office's electronic filing system requirements and be accompanied by the publication fee set forth in § 1.18(d) and the processing fee set forth in

[1] Changes to Implement Eighteen-Month Publication of Patent Applications, 65 FR 57023, 57038 (Sept. 20, 2000), 1239, Off. Gaz. Pat. Office Notices 63, 75 (Oct. 10, 2000) (final rule).

§ 1.17(i)." If the request for republication does not comply with the electronic filing system requirements, the republication will not take place and the publication fee set forth in § 1.18(d) will be refunded. The processing fee will be retained.

A guide for filing a request for a Pre-Grant Publication, such as a request for republication, may be found on the link below:

http://www.uspto.gov/patents/process/file/efs/guidance/index.jsp

http://www.uspto.gov/ebc/portal/efs/pgpub_quickstart.pdf

Any request for republication under 37 CFR 1.221(a), must be submitted via the EFS system, as a "Pre-Grant Publication."

Inquiries relating to this matter may be directed to Mark Polutta at (571) 272-7709.

Mark Polutta
Senior Legal Advisor
Office of Patent Legal Administration
Office of the Deputy Commissioner
for Patent Examination Policy

30 AUG 2010

UNITED STATES PATENT AND TRADEMARK OFFICE

Commissioner for Patents
United States Patent and Trademark Office
P.O. Box 1450
Alexandria, VA 22313-1450
www.uspto.gov

Bacon & Thomas, PLLC
625 Slaters Lane
Fourth Floor
Alexandria VA 22314-1176

In re Application of AKABA et al. U.S. Application No.: 11/791,102 PCT No.: PCT/JP2005/021231 International Filing Date: 18 November 2005 Priority Date: 22 November 2004 Attorney's Docket No.: AKAB3001/GAL For: MICROCHIP	DECISION ON PETITION

This decision is issued in response to applicant's "Petition for Withdrawal of Holding of Abandonment" filed on 07 June 2010, which is being treated as a Petition under 37 CFR 1.181. No petition fee is due.

BACKGROUND

On 18 November 2005, applicant filed international application PCT/JP2005/021231 which claimed a priority date of 22 November 2004. Pursuant to 37 CFR 1.495, the thirty-month period for paying the basic national fee in the United States expired at midnight on 22 May 2007.

On 18 May 2007, the United States Patent and Trademark Office (USPTO) received a submission from applicant seeking to enter the national stage in the United States accompanied by, among other materials, payment of the basic national fee; a copy of the international application; an executed declaration; and a preliminary amendment. Additionally, the submission included: a diskette containing a purported computer readable form (CRF); a statement under 37 CFR 1.821(f); and a paper copy of the sequence listing.

On 04 December 2007, the United States Designated/Elected Office (DO/EO/US) mailed a Notification to Comply with Requirements for Patent Applications Containing Nucleotide and/or Amino Acid Sequence Disclosures (Form PCT/DO/EO/922) indicating that the content of the computer readable form did not comply with the requirements of 37 CFR 1.822 and 1.823. A substitute diskette containing a purported computer readable form (CRF) and statement were required.

On 20 December 2007, applicant filed "Response to Notification to Comply with Requirements for Patent Applications Containing Nucleotide and/or Amino Acid Sequence

Disclosures" which included a diskette containing a purported computer readable form (CRF); a statement under 37 CFR 1.821(f); and a paper copy of the sequence listing.

On 15 May 2008, the USPTO mailed a Notification Of A Defective Response (Form PCT/DO/EO/916) "that the content of the computer readable form did not comply with the requirements of 37 CFR 1.822 and 1.823."

On 29 May 2008, applicant filed "Response to Notification of Defective Response" which included a diskette containing a purported computer readable form (CRF); a statement under 37 CFR 1.821(f); and a paper copy of the sequence listing.

On 19 February 2009, the United States Designated/ Elected Office (DO/EO/US) mailed a (second) Notification of Defective Response (Form PCT/DO/EO/916) indicating that additional sequence listing materials were required, including a computer readable form (CRF) of the sequence listing.[1]

On 19 March 2009, applicant filed "Response to Notification of Defective Response" which included a diskette containing a purported computer readable form (CRF); a statement under 37 CFR 1.821(f); and a paper copy of the sequence listing.

On 28 May 2010, the USPTO mailed a Notification of Abandonment under 37 CFR 1.495 (Form PCT/DO/EO/909) indicating that the application was abandoned for failure to file a complete response to the Notification to Comply with Requirements for Patent Applications Containing Nucleotide and/or Amino Acid Sequence Disclosures (Form PCT/DO/EO/922) mailed 04 December 2007 within the time period set therein.

On 07 June 2010, applicant filed a "Petition for Withdrawal of Holding of Abandonment."

DISCUSSION

The above-identified application was abandoned for failure to file a complete response to the Notification to Comply with Requirements for Patent Applications Containing Nucleotide and/or Amino Acid Sequence Disclosures mailed 04 December 2007, in that, the sequence listing in computer readable form complying with 37 CFR 1.821-1.825 had not been submitted within the period set therein. Since the Notification to Comply with Requirements for Patent Applications Containing Nucleotide and/or Amino Acid Sequence Disclosures was mailed on 04 December 2007, applicant was required to submit a response by 04 February 2008. If applicant elected to use to the provisions under 37 CFR 1.136, applicant was required to file a complete response by 07 July 2008.

---

[1]The United States Designated/Elected Office should have mailed a Notification of Abandonment (Form/DO/EO/909) indicating that the application was abandoned for failure to file a complete response to the Notification to Comply with Requirements for Patent Applications Containing Nucleotide and/or Amino Acid Sequence Disclosures mailed 04 December 2007 since the time period to respond had expired.

Applicant submitted a response to the Notification Defective Response on 29 May 2008. A review of the application file reveals that the Computer Readable Form filed 29 May 2008 contained detectable errors and was not considered a proper response to the Notification of Defective Response. Since the time-limit to respond to the Notification to Comply with Requirements for Patent Applications Containing Nucleotide and/or Amino Acid Sequence Disclosures (Form PCT/DO/EO/922) had elapsed, a Notification of Abandonment should have been mailed, instead of the second Notification Of A Defective Response (Form PCT/DO/EO/916) dated 19 February 2009. (See Manual of Patent Examining Procedure §714.03, states that "once an inadvertent omission is brought to the attention of the applicant, the question of inadvertence no longer exists." Therefore, a second Office action giving another new (1 month) time period to supply the omission would not be appropriate under 37 CFR 1.135(c).)

Therefore, the USPTO was correct in mailing the Notification of Abandonment and the petition may not be properly granted.

CONCLUSION

The petition under 37 CFR 1.181 is **DISMISSED** without prejudice and the application remains **ABANDONED**.

Applicants may wish to consider filing a petition to the Commissioner under 37 CFR 1.137(b) requesting that the application be revived. Any petition filed under 37 CFR 1.137(b) requesting that the application be revived must meet the criteria indicated in the recent revision of 37 CFR 1.137. This recommendation to file a petition under 37 CFR 1.137(b) should not be construed as an indication as to whether or not any such petition(s) will be favorably considered. It is noted that a sequence listing in compliance with 37 CFR 1.821-1.825 is still required.

If reconsideration on the merits of this petition is desired, an appropriate response to this decision must be filed within **TWO (2) MONTHS** from the mail date of this decision. Any reconsideration request should include a cover letter entitled "Renewed Petition Under 37 CFR 1.181."

Any further correspondence with respect to this matter may be filed electronically via EFS-Web selecting the document description "Petition for review and processing by the PCT Legal Office" or by mail addressed to Mail Stop PCT, Commissioner for Patents, Office of PCT Legal Administration, P.O. Box 1450, Alexandria, Virginia 22313-1450, with the contents of the letter marked to the attention of the Office of PCT Legal Administration.

Anthony Smith
Attorney-Advisor
Office of PCT Legal Administration
Tel: (571) 272-3298

UNITED STATES PATENT AND TRADEMARK OFFICE

Commissioner for Patents
United States Patent and Trademark Office
P.O. Box 1450
Alexandria, VA 22313-1450
www.uspto.gov

Bacon & Thomas, PLLC
625 Slaters Lane
Fourth Floor
Alexandria VA 22314-1176

MAILED

OCT 28 2010

PCT LEGAL ADMINISTRATION

In re Application of
AKABA et al.
U.S. Application No.: 11/791,102
PCT No.: PCT/JP2005/021231
International Filing Date: 18 November 2005
Priority Date: 22 November 2004
Attorney's Docket No.: AKAB3001/GAL
For: MICROCHIP

DECISION ON PETITION

The petition to revive under 37 CFR 1.137(b) filed 01 September 2010 in the above-captioned application is hereby **GRANTED** as follows:

Applicant's statement that "the entire delay in filing the required reply from the due date for the reply until the filing of a grantable petition under 37 CFR 1.137(b) was unintentional" meets the requirements of 37 CFR 1.137(b)(3).

A review of the application file reveals that applicant has submitted the required reply (sequence listing) and the requirements of 37 CFR 1.137(b) have been satisfied. Therefore, the request to revive the application abandoned under 35 U.S.C. 371(d) is granted as to the National stage in the United States of America.

This application is being returned to the United States Designated/Elected Office for processing in accordance with this decision.

Anthony Smith
Attorney-Advisor
Office of PCT Legal Administration
Tel: (571) 272-3298

UNITED STATES PATENT AND TRADEMARK OFFICE

Commissioner for Patents
United States Patent and Trademark Office
P.O. Box 1450
Alexandria, VA 22313-1450
www.uspto.gov

JACOBSON HOLMAN PLLC
400 SEVENTH STREET N.W.
SUITE 600
WASHINGTON DC 20004

MAILED

DEC 20 2010

OFFICE OF PETITIONS

In re Application of	:	
Chantal SAVOYE et al.	:	
Application No. 11/791,163	:	DECISION ON PETITION
Filed: May 21, 2007	:	
Attorney Docket No. P71877US0	:	

This is a decision on the petition under the unintentional provisions of 37 CFR 1.137(b), filed October 15, 2010, to revive the above-identified application.

The petition is **GRANTED**.

The application became abandoned for failure to timely file a reply within the meaning of 37 CFR 1.113 to the final Office action of April 14, 2010. The proposed reply required for consideration of a petition to revive must be a Notice of Appeal (and appeal fee required by 37 CFR 41.20(b)(2), an amendment that *prima facie* places the application in condition for allowance, a Request for Continued Examination and submission (37 CFR 1.114), or the filing of a continuing application under 37 CFR 1.53(b). See MPEP 711.03(c)(III)(A)(2). No extensions of time pursuant to the provisions of 37 CFR 1.136(a) were obtained. Accordingly, the date of abandonment of this application is July 15, 2010.

The petition satisfies the requirements of 37 CFR 1.137(b) in that petitioner has supplied (1) the reply in the form of a Request for Continued Examination (RCE) and fee of $810.00, and the submission required by 37 CFR 1.114; (2) the petition fee of $1,620.00; and (3) a proper statement of unintentional delay. Accordingly, the reply to the final Office action of April 14, 2010 is accepted as having been unintentionally delayed.

37 CFR 1.137(b)(3) requires a statement that "the entire delay in filing the required reply from the due date for the reply until the filing of a grantable petition pursuant to 37 CFR 1.137(b) was

unintentional." Since the statement appearing in the petition varies from the language required by 37 CFR 1.137(b)(3), the statement is being construed as the required statement. Petitioner must notify the Office if this is **not** a correct reading of the statement appearing in the petition.

An extension of time under 37 CFR 1.136 must be filed prior to the expiration of the maximum extendable period for reply. *See* In re Application of S., 8 USPQ2d 1630, 1631 (Comm'r Pats. 1988). Since the $1,110.00 extension of time fee submitted with the petition on October 15, 2010 was subsequent to the maximum extendable period for reply, this fee is unnecessary and will be credited to petitioner's deposit account.

Telephone inquiries concerning this decision should be directed to the undersigned at (571) 272-4231.

This application is being referred to Technology Center AU 1637 for processing of the RCE and for appropriate action by the Examiner in the normal course of business on the amendment submitted in accordance with 37 CFR 1.114.

Michelle R. Eason
Paralegal Specialist
Office of Petitions

UNITED STATES PATENT AND TRADEMARK OFFICE

Commissioner for Patents
United States Patent and Trademark Office
P.O. Box 1450
Alexandria, VA 22313-1450
www.uspto.gov

JACOBSON HOLMAN PLLC
400 SEVENTH STREET N.W.
SUITE 600
WASHINGTON DC 20004

MAILED
MAY 25 2011
OFFICE OF PETITIONS

In re Application of	:	
SAVOYE, Chantal et al	:	
Application No. 11/791,163	:	DECISION ON PETITION
Filed: May 21, 2007	:	
Attorney Docket No. **P71877US0**	:	

Dear Sir/Madam,

This supplements the previously mailed decision on December 20, 2010, granting the petition to revive. As the Request for Continued Examination (RCE) was accepted as the reply by the petition to revive, the Notice of Appeal filed concurrently therewith was unnecessary.

Accordingly, the $540.00 fee for filing a Notice of Appeal has been credited to petitioner's credit card

This application is being referred to Technology Center AU 1637 for examination in due course.

Telephone inquiries regarding this decision should be directed to the undersigned at (571) 272-4231.

Michelle R. Eason
Paralegal Specialist
Office of Petitions

UNITED STATES PATENT AND TRADEMARK OFFICE

Commissioner for Patents
United States Patent and Trademark Office
P.O. Box 1450
Alexandria, VA 22313-1450
www.uspto.gov

August 9, 2011

MARTIN D. MOYNIHAN d/b/a PRTSI, INC.
P.O. BOX 16446
ARLINGTON VA 22215

In re Application of	:	
Shimon Efrat	:	**DECISION ON PETITION**
Application No. 11791170	:	
Filed: 5/21/2007	:	***ACCEPTANCE OF COLOR***
Attorney Docket No. 38391	:	***DRAWINGS***

This is a decision on the Petition to Accept Color Drawings under 37 C.F.R 1.84 (a) (2), received in the United States Patent and Trademark Office (USPTO) May 21, 2007.

The petition is **GRANTED**.

A grantable petition under 37 C.F.R. 1.84(a) (2) must be accompanied by the following.

1. The fee set forth under 37 C.F.R. 1.17(h),
2. Three (3) sets of the color drawings in question, or (1) set if filed via EFS, and
3. The specification contains appropriate language referring to the color drawings as the first paragraph in that portion of the specification relating to the brief description of the drawings.

The petition was accompanied by all of the required fees and drawings. The specification contains the appropriate language. Therefore, the petition is GRANTED.

Telephone inquires relating to this decision may be directed to the undersigned in the Office of Data Management at 571-272-4200.

/Don Fairchild/
Office of Data Management
Publications Branch

UNITED STATES PATENT AND TRADEMARK OFFICE

Commissioner for Patents
United States Patent and Trademark Office
P.O. Box 1450
Alexandria, VA 22313-1450
www.uspto.gov

NOVO NORDISK, INC.
INTELLECTUAL PROPERTY DEPARTMENT
100 COLLEGE ROAD WEST
PRINCETON NJ 08540

MAILED

MAR 11 2011

OFFICE OF PETITIONS

In re Application of	:	
Lone Jeppesen et al	:	
Application No. 11/791,200	:	DECISION GRANTING PETITION
Filed: May 21, 2007	:	UNDER 37 CFR 1.313(c)(2)
Attorney Docket No. 6937.204-US	:	

This is a decision on the petition under 37 CFR 1.313(c)(2), filed March 10, 2011, to withdraw the above-identified application from issue after payment of the issue fee.

The petition is **GRANTED**.

The above-identified application is withdrawn from issue for consideration of a submission under 37 CFR 1.114 (request for continued examination). *See* 37 CFR 1.313(c)(2).

Petitioner is advised that the issue fee paid on March 2, 2011 cannot be refunded. If, however, this application is again allowed, petitioner may request that it be applied towards the issue fee required by the new Notice of Allowance.[1]

Telephone inquiries should be directed to the undersigned at (571) 272-3208.

This application is being referred to Technology Center AU 1626 for processing of the request for continued examination under 37 CFR 1.114 and for consideration of the concurrently filed IDS.

/Karen Creasy/
Karen Creasy
Petitions Examiner
Office of Petitions

---

[1] *The request to apply the issue fee to the new Notice may be satisfied by completing and returning the new Part B – Fee(s) Transmittal Form (along with any balance due at the time of submission). Petitioner is advised that the Issue Fee Transmittal Form* ***must*** *be completed and timely submitted to avoid abandonment of the application.*

EAST Search History

EAST Search History (Prior Art)

Ref #	Hits	Search Query	DBs	Default Operator	Plurals	Time Stamp
S1	0	("4069348.pn.").PN.	USPAT; USOCR	OR	OFF	2009/08/14 11:00
S2	0	("4069348.pn.").PN.	US-PGPUB; USPAT; USOCR; DERWENT	OR	OFF	2009/08/14 11:00
S3	0	("4069348.pn.").PN.	US-PGPUB; USPAT; USOCR; FPRS; JPO; DERWENT	OR	OFF	2009/08/14 11:00
S4	3	("4069348").PN.	US-PGPUB; USPAT; USOCR; FPRS; JPO; DERWENT	OR	OFF	2009/08/14 11:00
S5	425	(206/539).CCLS.	US-PGPUB; USPAT; USOCR; FPRS; JPO; DERWENT	OR	OFF	2009/08/14 11:01
S6	6	("2432925").PN.	US-PGPUB; USPAT; USOCR; FPRS; JPO; DERWENT	OR	OFF	2009/08/14 11:26
S7	4	("2432925").PN.	DERWENT	OR	OFF	2009/08/14 11:27
S8	0	(53/450).CCLS.	DERWENT	OR	OFF	2009/08/14 12:05
S9	1116	(53/450).CCLS.	US-PGPUB; USPAT; USOCR; FPRS; DERWENT	OR	OFF	2009/08/14 12:05
S10	487	(206/528).CCLS.	US-PGPUB; USPAT; USOCR; FPRS; DERWENT	OR	OFF	2009/08/14 12:05
S11	0	("filmsamecapsule").PN.	US-PGPUB; USPAT; USOCR; FPRS; EPO; JPO; DERWENT	OR	OFF	2010/11/15 12:49
S12	22966	film same capsule	US-PGPUB; USPAT; USOCR; FPRS; EPO; JPO; DERWENT	OR	ON	2010/11/15 12:50
S13	0	206/528,535	US-PGPUB; USPAT; USOCR; FPRS; EPO; JPO; DERWENT	OR	ON	2010/11/15 12:50

S14	0	206/528-535	US-PGPUB; USPAT; USOCR; FPRS; EPO; JPO; DERWENT	OR	ON	2010/11/15 12:50
S15	2345	(206/528-535).CCLS.	US-PGPUB; USPAT; USOCR; FPRS; EPO; JPO; DERWENT	OR	OFF	2010/11/15 12:50
S16	0	("002and5").PN.	US-PGPUB; USPAT; USOCR; FPRS; EPO; JPO; DERWENT	OR	OFF	2010/11/15 12:51
S17	124	S12 and S15	US-PGPUB; USPAT; USOCR; FPRS; EPO; JPO; DERWENT	OR	ON	2010/11/15 12:51
S18	108	(film adj strip) same capsule	US-PGPUB; USPAT; USOCR; FPRS; EPO; JPO; DERWENT	OR	ON	2010/11/15 12:51
S19	4	S15 and S18	US-PGPUB; USPAT; USOCR; FPRS; EPO; JPO; DERWENT	OR	ON	2010/11/15 12:52
S20	0	"34097219"	US-PGPUB; USPAT; USOCR; FPRS; EPO; JPO; DERWENT	OR	ON	2010/11/15 13:00
S21	49	"3409721"	US-PGPUB; USPAT; USOCR; FPRS; EPO; JPO; DERWENT	OR	ON	2010/11/15 13:00
S22	2	(film adj strip with medication) same capsule	US-PGPUB; USPAT; USOCR; FPRS; EPO; JPO; DERWENT	OR	ON	2010/11/15 13:21
S23	4	(medication or active ingredient) with(film adj strip with capsule)	US-PGPUB; USPAT; USOCR; FPRS; EPO; JPO; DERWENT	OR	ON	2010/11/15 14:20
S24	1	6655112B1	US-PGPUB; USPAT; USOCR; FPRS; EPO; JPO; DERWENT	OR	ON	2010/11/15 14:44
S25	1	"11791256"	US-PGPUB; USPAT; USOCR; FPRS; EPO; JPO; DERWENT	OR	ON	2010/11/15 14:44
S26	68	(cosmetic or medicinal, band-aids nail band or oral mouth film) with(film adj strip with capsule)	US-PGPUB; USPAT; USOCR; FPRS; EPO; JPO; DERWENT	OR	ON	2010/11/15 14:48

S27	618	206/583	US-PGPUB; USPAT; USOCR; FPRS; EPO; JPO; DERWENT	OR	ON	2010/11/15 14:48
S28	0	S26 and S27	US-PGPUB; USPAT; USOCR; FPRS; EPO; JPO; DERWENT	OR	ON	2010/11/15 14:48
S29	137019	"206"/$.ccls.	US-PGPUB; USPAT; USOCR; FPRS; EPO; JPO; DERWENT	OR	ON	2010/11/15 14:48
S30	6	S26 and S29	US-PGPUB; USPAT; USOCR; FPRS; EPO; JPO; DERWENT	OR	ON	2010/11/15 14:48
S31	68	(cosmetic or medicinal or band-aids nail band or oral mouth film) with (film adj strip with capsule)	US-PGPUB; USPAT; USOCR; FPRS; EPO; JPO; DERWENT	OR	ON	2010/11/15 14:49
S32	6	S31 and S29	US-PGPUB; USPAT; USOCR; FPRS; EPO; JPO; DERWENT	OR	ON	2010/11/15 14:49
S33	68	(cosmetic or medicinal or band-aids nail or band or oral mouth film) with (film adj strip with capsule)	US-PGPUB; USPAT; USOCR; FPRS; EPO; JPO; DERWENT	OR	ON	2010/11/15 14:52
S34	2590912	(flat form adj(cosmetic or medicinal or band-aids nail or band or oral mouth film) with capsule)	US-PGPUB; USPAT; USOCR; FPRS; EPO; JPO; DERWENT	OR	ON	2010/11/15 14:55
S35	137019	"206"/$.ccls.	US-PGPUB; USPAT; USOCR; FPRS; EPO; JPO; DERWENT	OR	ON	2010/11/15 14:56
S36	34982	S34 and S35	US-PGPUB; USPAT; USOCR; FPRS; EPO; JPO; DERWENT	OR	ON	2010/11/15 14:56
S37	0	(flat adj form adj(cosmetic or medicinal or band-aids nail or band or oral mouth film) with capsule)	US-PGPUB; USPAT; USOCR; FPRS; EPO; JPO; DERWENT	OR	ON	2010/11/15 14:56
S38	2590912	(flat form$1 adj(cosmetic or medicinal or band-aids nail or band or oral mouth film) with capsule)	US-PGPUB; USPAT; USOCR; FPRS; EPO; JPO; DERWENT	OR	ON	2010/11/15 14:56
S39	34982	S35 and S38	US-PGPUB; USPAT; USOCR; FPRS; EPO; JPO; DERWENT	OR	ON	2010/11/15 14:56

S40	0	(flat adj form with(cosmetic or medicinal or band-aids nail or band or oral mouth film) with capsule)	US-PGPUB; USPAT; USOCR; FPRS; EPO; JPO; DERWENT	OR	ON	2010/11/15 14:57
S41	0	(flat adj form with (cosmetic or medicinal or band-aids nail or band or oral mouth film) with capsule)	US-PGPUB; USPAT; USOCR; FPRS; EPO; JPO; DERWENT	OR	ON	2010/11/15 14:57
S42	9	(flat adj(cosmetic or medicinal or band-aids nail or band or oral mouth film) with capsule)	US-PGPUB; USPAT; USOCR; FPRS; EPO; JPO; DERWENT	OR	ON	2010/11/15 14:58
S43	9134986	DE 29823463U1	US-PGPUB; USPAT; USOCR; FPRS; EPO; JPO; DERWENT	OR	ON	2010/11/15 15:00
S44	0	29823463U1	US-PGPUB; USPAT; USOCR; FPRS; EPO; JPO; DERWENT	OR	ON	2010/11/15 15:00
S45	2	"29823463"	US-PGPUB; USPAT; USOCR; FPRS; EPO; JPO; DERWENT	OR	ON	2010/11/15 15:01
S46	9	(flat adj (cosmetic or medicinal or band-aids nail or band or oral mouth film) with capsule)	US-PGPUB; USPAT; USOCR; FPRS; EPO; JPO; DERWENT	OR	ON	2010/11/15 15:06
S47	386919	(flat adj (cosmetic or medicinal or band-aids nail or band or oral mouth film) or capsule)	US-PGPUB; USPAT; USOCR; FPRS; EPO; JPO; DERWENT	OR	ON	2010/11/15 15:08
S48	137019	"206"/$.ccls.	US-PGPUB; USPAT; USOCR; FPRS; EPO; JPO; DERWENT	OR	ON	2010/11/15 15:08
S49	2789	S47 and S48	US-PGPUB; USPAT; USOCR; FPRS; EPO; JPO; DERWENT	OR	ON	2010/11/15 15:08
S50	1444	"206"/528	US-PGPUB; USPAT; USOCR; FPRS; EPO; JPO; DERWENT	OR	ON	2010/11/15 15:09
S51	426	S47 and S50	US-PGPUB; USPAT; USOCR; FPRS; EPO; JPO; DERWENT	OR	ON	2010/11/15 15:09
S52	9	(flat adj (cosmetic or medicinal or band-aids nail or band or oral mouth film) with capsule)	US-PGPUB; USPAT; USOCR; FPRS; EPO; JPO; DERWENT	OR	ON	2010/11/15 15:10

S53	1	S50 and S52	US-PGPUB; USPAT; USOCR; FPRS; EPO; JPO; DERWENT	OR	ON	2010/11/15 15:10
S54	2	(flat adj strip with (cosmetic or medicinal or band-aids nail or band or oral mouth film) with capsule)	US-PGPUB; USPAT; USOCR; FPRS; EPO; JPO; DERWENT	OR	ON	2010/11/15 15:14
S55	12	(flat adj strip with (cosmetic or medicinal or band-aids or oral mouth film) and capsule)	US-PGPUB; USPAT; USOCR; FPRS; EPO; JPO; DERWENT	OR	ON	2010/11/15 15:16
S56	369898	(flat adj strip with (cosmetic or medicinal or band-aids or oral mouth film) or capsule)	US-PGPUB; USPAT; USOCR; FPRS; EPO; JPO; DERWENT	OR	ON	2010/11/15 15:17
S57	426	S50 and S56	US-PGPUB; USPAT; USOCR; FPRS; EPO; JPO; DERWENT	OR	ON	2010/11/15 15:17
S58	2	(flat adj strip with (cosmetic or medicinal or band-aids or oral mouth film) with capsule)	US-PGPUB; USPAT; USOCR; FPRS; EPO; JPO; DERWENT	OR	ON	2010/11/15 15:18
S59	107	((package or blister) with (medication or medicaded) with (strip or patches or pad)) and (capsule or tablet)	US-PGPUB; USPAT; USOCR; FPRS; EPO; JPO; DERWENT	OR	ON	2010/11/15 16:02
S60	10	S59 and S50	US-PGPUB; USPAT; USOCR; FPRS; EPO; JPO; DERWENT	OR	ON	2010/11/15 16:02
S61	30	"6319510"	US-PGPUB; USPAT; USOCR; FPRS; EPO; JPO; DERWENT	OR	ON	2010/11/15 16:07
S62	61	("3510053" | "4153611" | "4373519" | "4389393" | "4485954" | "4517173" | "4540566" | "4572832" | "4615697" | "4619935" | "4642903" | "4713243" | "4761288" | "4829056" | "4900552" | "4900554" | "4906378" | "4937078" | "5021053" | "5059421" | "5114719" | "5137729" | "5197882" | "5200194" | "5200195" | "5225212" | "5248310" | "5267862" | "5320840" | "5326685" | "5713852" | "5741500" | "5762952" | "5780045" | "5849322" | "5855908" | "5874095" | "5891465").PN. OR ("6319510").URPN.	US-PGPUB; USPAT; USOCR	OR	ON	2010/11/15 16:21

S63	6	medication with (adhesive adj patch) and (pill)	US-PGPUB; USPAT; USOCR; FPRS; EPO; JPO; DERWENT	OR	ON	2010/11/15 16:21
S64	5417	medication with (adhesive adj patchcosmetic or medicinal or band-aids nail or band or oral mouth film) and (pill or capsule)	US-PGPUB; USPAT; USOCR; FPRS; EPO; JPO; DERWENT	OR	ON	2010/11/15 16:25
S65	64	S50 and S64	US-PGPUB; USPAT; USOCR; FPRS; EPO; JPO; DERWENT	OR	ON	2010/11/15 16:26
S66	5417	medication with (medicinal or band-aids nail or band or oral mouth film) and (pill or capsule)	US-PGPUB; USPAT; USOCR; FPRS; EPO; JPO; DERWENT	OR	ON	2010/11/15 16:26
S67	64	S50 and S66	US-PGPUB; USPAT; USOCR; FPRS; EPO; JPO; DERWENT	OR	ON	2010/11/15 16:27
S68	127176	medication patch$2 with (medicinal or band-aids nail or band or oral mouth film) and (pill or capsule)	US-PGPUB; USPAT; USOCR; FPRS; EPO; JPO; DERWENT	OR	ON	2010/11/15 16:30
S69	391	S68 and S50	US-PGPUB; USPAT; USOCR; FPRS; EPO; JPO; DERWENT	OR	ON	2010/11/15 16:30
S70	31	medication with (flat with (medicinal or band-aids nail or band or oral mouth film)) and (pill or capsule)	US-PGPUB; USPAT; USOCR; FPRS; EPO; JPO; DERWENT	OR	ON	2010/11/15 16:31
S71	2	S70 and S50	US-PGPUB; USPAT; USOCR; FPRS; EPO; JPO; DERWENT	OR	ON	2010/11/15 16:32
S72	32	medication with (flat with (medicinal or band-aids nail or band-aid or oral mouth film or cosmetic)) and (pill or capsule)	US-PGPUB; USPAT; USOCR; FPRS; EPO; JPO; DERWENT	OR	ON	2010/11/15 16:33
S73	0	medication with (flat adj band-aids) and (pill or capsule)	US-PGPUB; USPAT; USOCR; FPRS; EPO; JPO; DERWENT	OR	ON	2010/11/15 16:35
S74	0	medication with (flat with band-aids) and (pill or capsule)	US-PGPUB; USPAT; USOCR; FPRS; EPO; JPO; DERWENT	OR	ON	2010/11/15 16:35
S75	225	medication with (flat- band-aids) and (pill or capsule)	US-PGPUB; USPAT; USOCR; FPRS; EPO; JPO; DERWENT	OR	ON	2010/11/15 16:36

S76	20	S75 and S50	US-PGPUB; USPAT; USOCR; FPRS; EPO; JPO; DERWENT	OR	ON	2010/11/15 16:36
S77	445	medication with (flat cosmetic $1) and (pill or capsule)	US-PGPUB; USPAT; USOCR; FPRS; EPO; JPO; DERWENT	OR	ON	2010/11/15 16:40
S78	221	medication with (flat form adj cosmetic$1) and (pill or capsule)	US-PGPUB; USPAT; USOCR; FPRS; EPO; JPO; DERWENT	OR	ON	2010/11/15 16:41
S79	20	S78 and S50	US-PGPUB; USPAT; USOCR; FPRS; EPO; JPO; DERWENT	OR	ON	2010/11/15 16:41
S80	49333	(flat form adj medication) and (pill or capsule)	US-PGPUB; USPAT; USOCR; FPRS; EPO; JPO; DERWENT	OR	ON	2010/11/15 16:42
S81	0	(flat adj form adj medication) and (pill or capsule)	US-PGPUB; USPAT; USOCR; FPRS; EPO; JPO; DERWENT	OR	ON	2010/11/15 16:42
S82	5	(flat adj medication) and (pill or capsule)	US-PGPUB; USPAT; USOCR; FPRS; EPO; JPO; DERWENT	OR	ON	2010/11/15 16:42
S83	4	"11278838"	US-PGPUB; USPAT; USOCR; FPRS; EPO; JPO; DERWENT	OR	ON	2010/11/15 16:44
S84	1200	206/37	US-PGPUB; USPAT; USOCR; FPRS; EPO; JPO; DERWENT	OR	ON	2010/11/15 16:45
S85	0	S82 and S84	US-PGPUB; USPAT; USOCR; FPRS; EPO; JPO; DERWENT	OR	ON	2010/11/15 16:45
S86	32	"6923981"	US-PGPUB; USPAT; USOCR; FPRS; EPO; JPO; DERWENT	OR	ON	2010/11/15 16:48

S87	39	("20030054034" | "20030206942" | "20050208108" | "20050251152" | "20050089548" | "20050208108" | "20060222704" | "3125490" | "3534440" | "4349531" | "5236713" | "6212791" | "6913766" | "6923981" | "6116414" | "6139861" | "6740332" | "6923981" | "7166154" | "7370797").PN.	US-PGPUB; USPAT; USOCR; FPRS; EPO; JPO; DERWENT	OR	ON	2010/11/15 16:48
S88	2	"11006810"	US-PGPUB; USPAT; USOCR; FPRS; EPO; JPO; DERWENT	OR	ON	2010/11/15 17:42
S89	1	"11006810"	US-PGPUB; USPAT; USOCR; FPRS; EPO; DERWENT	OR	ON	2010/11/15 17:42
S90	0	"11006810"	US-PGPUB; USPAT; USOCR; FPRS	OR	ON	2010/11/15 17:43
S91	0	(11/006810).APP.	USPAT; USOCR	OR	OFF	2010/11/15 17:43
S92	1	(11/006810).APP.	US-PGPUB; USPAT; USOCR	OR	OFF	2010/11/15 17:43
S93	5576	(medication with (adhesive adj patch or cosmetic or medicinal or band-aids nail or band or oral mouth film)) and (pill or capsule)	US-PGPUB; USPAT; USOCR; FPRS; EPO; JPO; DERWENT	OR	ON	2010/11/15 18:20
S94	1444	206/528	US-PGPUB; USPAT; USOCR; FPRS; EPO; JPO; DERWENT	OR	ON	2010/11/15 18:21
S95	65	S93 and S94	US-PGPUB; USPAT; USOCR; FPRS; EPO; JPO; DERWENT	OR	ON	2010/11/15 18:21
S96	1	6708826B1	US-PGPUB; USPAT; USOCR; FPRS; EPO; JPO; DERWENT	OR	ON	2010/11/15 18:34
S97	2	"10427047"	US-PGPUB; USPAT; USOCR; FPRS; EPO; JPO; DERWENT	OR	ON	2010/11/15 18:35

S98	43	("20030054034" | "20030136698" | "20030224044" | "20040055903" | "2920759" | "3315802" | "3625351" | "3677866" | "3768725" | "3826222" | "4498591" | "4645077" | "4720011" | "4811845" | "4884718" | "4889238" | "4932547" | "5259499" | "5415276" | "5419437" | "5613779" | "5630546" | "5655653" | "5791540" | "5836444" | "5931304" | "6173838" | "6177391" | "6199698" | "6247595" | "6293403" | "6326069" | "6516950" | "6568533" | "6575627" | "6596298" | "6619479" | "6708826" | "6776284" | "RE33880").PN. OR ("7357255").URPN.	US-PGPUB; USPAT; USOCR	OR	ON	2010/11/15 18:35
S99	393	206/463	US-PGPUB; USPAT; USOCR; FPRS; EPO; JPO; DERWENT	OR	ON	2010/11/17 11:26
S100	1431	206/538	US-PGPUB; USPAT; USOCR; FPRS; EPO; JPO; DERWENT	OR	ON	2010/11/17 11:31
S101	37	"2499313"	US-PGPUB; USPAT; USOCR; FPRS; EPO; JPO; DERWENT	OR	ON	2010/11/17 11:35
S102	926	206/56	US-PGPUB; USPAT; USOCR; FPRS; EPO; JPO; DERWENT	OR	ON	2010/11/17 11:35

EAST Search History (Interference)

<This search history is empty>

11/18/2010 11:10:28 AM
H:\ primary packing unit for flat forms of administration.pts.wsp

UNITED STATES PATENT AND TRADEMARK OFFICE

Commissioner for Patents
United States Patent and Trademark Office
P.O. Box 1450
Alexandria, VA 22313-1450
www.uspto.gov

THOMAS R. VIGIL
LAW OFFICES
319 BLUFF COURT
BARRINGTON IL 60010

MAILED

JUL 22 2011

OFFICE OF PETITIONS

In re Application of :
Hansen, et al. :
Application No. 11/791,261 : DECISION
Filed/Deposited: 21 May, 2007 :
Attorney Docket No. VWWH-40070 :

This is a decision on the papers filed on 11 July, 2011, considered as a petition pursuant to 37 C.F.R. §1.181 (no fee) requesting withdrawal of the holding of abandonment in the above-identified application.

The petition pursuant to 37 C.F.R. §1.181 is **GRANTED**.

As to the Request to Withdraw
the Holding of Abandonment

Petitioners always are directed to the Commentary at MPEP §711.03(c)(I) for guidance as to the proper showing requirements for relief pursuant to 37 C.F.R. §1.181.

BACKGROUND

The record reflects as follows:

Petitioner failed to reply timely and properly to the non-final Office action 20 December, 2010, with reply due absent extension of time on or before 20 March, 2011.

The application went abandoned by operation of law after midnight 20 March, 2011.

The Office mailed the Notice of Abandonment on 28 June, 2011.

On 7 July, 2011, Petitioner filed, *inter alia*, copies of an amendment and a request and fee for extension of time.

On Monday, 11 July, 2011, Petitioner filed, *inter alia*, a petition pursuant to 37 C.F.R. §1.181 averring timely reply, with copies of the papers averred to have been submitted timely on 20 June, 2011, with request and fee for extension of time (then charged) and a reply in the form of an amendment with a copy of the Office FAX Acknowledgement Receipt. Thus, Petitioner sought to comply with the guidance in the Commentary at MPEP §711.03(c)(I).

With regard to Petitioner's request to withdraw the holding of abandonment pursuant to 37 C.F.R. §1.181, the guidance in the Commentary at MPEP §711.03(c)(I) provides in pertinent part as to timely fling:

***

> 37 C.F.R. §1.10(c) through §1.10(e) and §1.10(g) set forth procedures for petitioning the Director of the USPTO to accord a filing date to correspondence as of the date of deposit of the correspondence as "Express Mail." A petition to withdraw the holding of abandonment relying upon a timely reply placed in "Express Mail" must include an appropriate petition under 37 C.F.R. §1.10(c), (d), (e), or (g) (see MPEP §513). When a paper is shown to have been mailed to the Office using the "Express Mail" procedures, the paper must be entered in PALM with the "Express Mail" date.
>
> Similarly, applicants may establish that a reply was filed with a postcard receipt that properly identifies the reply and provides *prima facie* evidence that the reply was timely filed. See MPEP §503. For example, if the application has been held abandoned for failure to file a reply to a first Office action, and applicant has a postcard receipt showing that an amendment was timely filed in response to the Office action, then the holding of abandonment should be withdrawn upon the filing of a petition to withdraw the holding of abandonment. When the reply is shown to have been timely filed based on a postcard receipt, the reply must be entered into PALM using the date of receipt of the reply as shown on the post card receipt.
>
> Where a certificate of mailing under 37 C.F.R. §1.8, but not a postcard receipt, is relied upon in a petition to withdraw the holding of abandonment, see 37 C.F.R. 1.8(b) and MPEP §512. As stated in 37 C.F.R. §1.8(b)(3) the statement that attests to the previous timely mailing or transmission of the correspondence must be on a personal knowledge basis, or to the satisfaction of the Director of the USPTO. If the statement attesting to the previous timely mailing is not made by the person who signed the Certificate of Mailing (i.e., there is no personal knowledge basis), then the statement attesting to the previous timely mailing should include evidence that supports the conclusion that the correspondence was actually mailed (e.g., copies of a mailing log establishing that correspondence was mailed for that application). When the correspondence is shown to have been timely filed based on a certificate of mailing, the correspondence is entered into PALM with the actual date of receipt (i.e., the date that the duplicate copy of the papers was filed with the statement under 37 C.F.R. §1.8).
>
> 37 C.F.R. §1.8(b) also permits applicant to notify the Office of a previous mailing or transmission of correspondence and submit a statement under 37 C.F.R. §1.8(b)(3) accompanied by a duplicate copy of the correspondence when a reasonable amount of time (e.g., more than one month) has elapsed from the time of mailing or transmitting of the correspondence. Appli-

> cant does not have to wait until the application becomes abandoned before notifying the Office of the previous mailing or transmission of the correspondence. Applicant should check the private Patent Application Information Retrieval (PAIR) system for the status of the correspondence before notifying the Office. See MPEP §512. [1]
>
> ***

Out of an abundance of caution, Petitioners always are reminded that the filing of a petition under 37 C.F.R. §1.181 does not toll any periods that may be running any action by the Office and a petition seeking relief under the regulation must be filed within two (2) months of the act complained of (*see*: 37 C.F.R. §1.181(f)), and those registered to practice and all others who make representations before the Office **must** inquire into the underlying facts of representations made to the Office and support averments with the appropriate documentation–since all owe to the Office the continuing duty to disclose.[2]

The availability of applications and application papers online to applicants/practitioners who diligently associate their Customer Number with the respective application(s) now provides an applicant/practitioner on-demand information as to events/transactions in an application.

STATUTES, REGULATIONS

Congress has authorized the Commissioner to "revive an application if the delay is shown to the satisfaction of the Commissioner to have been "unavoidable." 35 U.S.C. §133 (1994). And the regulations at 37 C.F.R. §1.137(a) and (b) set forth the requirements for a Petitioner to revive a previously unavoidably or unintentionally, respectively, abandoned application.[3],[4]

Moreover, the Office has set forth in the Commentary at MPEP §711.03(c)(I) the showing and timeliness requirements for a proper showing for relief under 37 C.F.R. §1.181 in these matters.

---

[1] *See*: MPEP §711.03(c) (I)(B).

[2] See supplement of 17 June, 1999. The Patent and Trademark Office is relying on Petitioner's duty of candor and good faith and accepting a statement made by Petitioner. See Changes to Patent Practice and Procedure, 62 Fed. Reg. at 53160 and 53178, 1203 Off. Gaz. Pat. Office at 88 and 103 (responses to comments 64 and 109)(applicant obligated under 37 C.F.R. §10.18 to inquire into the underlying facts and circumstances when providing statements to the Patent and Trademark Office).

[3] See: Changes to Patent Practice and Procedure; Final Rule Notice, 62 Fed. Reg. at 53158-59 (October 10, 1997), 1203 Off. Gaz. Pat. Office at 86-87 (October 21, 1997).

[4] The language of 35 U.S.C. §133 and 37 C.F.R. §1.137(a) is clear, unambiguous, and without qualification: the delay in tendering the reply to the outstanding Office action, as well as filing the first petition seeking revival, must have been unavoidable for the reply now to be accepted on petition. (Therefore, by example, an unavoidable delay in the payment of the Filing Fee might occur if a reply is shipped by the US Postal Service, but due to catastrophic accident, the delivery is not made.) Delays in responding properly raise the question whether delays are unavoidable. Where there is a question whether the delay was unavoidable, Petitioners must meet the burden of establishing that the delay was unavoidable within the meaning of 35 U.S.C. §133 and 37 C.F.R. §1.137(a) And the Petitioner must be diligent in attending to the matter. Failure to do so does not constitute the care required under Pratt, and so cannot satisfy the test for diligence and due care. (By contrast, unintentional delays are those that do not satisfy the very strict statutory and regulatory requirements of unavoidable delay, and also, by definition, are not intentional.))

Decisions on reviving abandoned applications on the basis of "unavoidable" delay have adopted the reasonably prudent person standard in determining if the delay was unavoidable:

> The word 'unavoidable' . . . is applicable to ordinary human affairs, and requires no more or greater care or diligence than is generally used and observed by prudent and careful men in relation to their most important business. It permits them in the exercise of this care to rely upon the ordinary and trustworthy agencies of mail and telegraph, worthy and reliable employees, and such other means and instrumentalities as are usually employed in such important business. If unexpectedly, or through the unforeseen fault or imperfection of these agencies and instrumentalities, there occurs a failure, it may properly be said to be unavoidable, all other conditions of promptness in its rectification being present.[5]

Allegations as to the Request to
Withdraw the Holding of Abandonment

The guidance in the Commentary at MPEP §711.03(c)(I) specifies the showing required and how it is to be made and supported.

The Office record reflects and so Petitioner appears to have made the showing required.

CONCLUSION

Accordingly, the petition as considered pursuant to 37 C.F.R. §1.181 is **granted**, and the 28 June, 2011, Notice of Abandonment hereby is **vacated**.

The instant application is released to the Technology Center/AU 3635 for further processing in due course.

Petitioner may find it beneficial to view Private PAIR within a fortnight of the instant decision to ensure that the revival has been acknowledged by the TC/AU in response to this decision. It is noted that all inquiries with regard to that change in status need be directed to the TC/AU where that change of status must be effected—that does not occur in the Office of Petitions.

---

[5] In re Mattullath, 38 App. D.C. 497, 514-15 (1912)(quoting Ex parte Pratt, 1887 Dec. Comm'r Pat. 31, 32-33 (1887)); see also Winkler v. Ladd, 221 F. Supp. 550, 552, 138 USPQ 666, 167-68 (D.D.C. 1963), aff'd, 143 USPQ 172 (D.C. Cir. 1963); Ex parte Henrich, 1913 Dec. Comm'r Pat. 139, 141 (1913). In addition, decisions on revival are made on a "case-by-case basis, taking all the facts and circumstances into account." Smith v. Mossinghoff, 671 F.2d 533, 538, 213 USPQ 977, 982 (D.C. Cir. 1982). Finally, a petition cannot be granted where a petitioner has failed to meet his or her burden of establishing that the delay was "unavoidable." Haines v. Quigg, 673 F. Supp. 314, 316-17, 5 USPQ2d 1130, 1131-32 (N.D. Ind. 1987).

Telephone inquiries regarding this decision may be directed to the undersigned at (571) 272-3214—it is noted, however, that all practice before the Office is in writing (see: 37 C.F.R. §1.2[6]) and the proper authority for action on any matter in this regard are the statutes (35 U.S.C.), regulations (37 C.F.R.) and the commentary on policy (MPEP). Therefore, no telephone discussion may be controlling or considered authority for Petitioner's action(s).

/John J. Gillon, Jr./
John J. Gillon, Jr.
Senior Attorney
Office of Petitions

[6] The regulations at 37 C.F.R. §1.2 provide:
§1.2 Business to be transacted in writing.
All business with the Patent and Trademark Office should be transacted in writing. The personal attendance of applicants or their attorneys or agents at the Patent and Trademark Office is unnecessary. The action of the Patent and Trademark Office will be based exclusively on the written record in the Office. No attention will be paid to any alleged oral promise, stipulation, or understanding in relation to which there is disagreement or doubt.

UNITED STATES PATENT AND TRADEMARK OFFICE

Commissioner for Patents
United States Patent and Trademark Office
P.O. Box 1450
Alexandria, VA 22313-1450
www.uspto.gov

PATTON BOGGS LLP
8484 WESTPARK DRIVE
SUITE 900
MCLEAN VA 22102

MAILED

FEB 27 2012

OFFICE OF PETITIONS

In re Application of	:	
Noam Mizrahi et al.	:	
Application No. 11/791,277	:	DECISION ON PETITION
Filed: March 12, 2008	:	TO WITHDRAW
Attorney Docket No. **023372.0108PTUS**	:	FROM RECORD
	:	

This is a decision on the Request to Withdraw as attorney or agent of record under 37 CFR § 1.36(b), filed February 9, 2012.

The request is **NOT APPROVED**.

The request cannot be approved because the requested change in the correspondence address is improper.

The Office will only accept correspondence address changes to the most current address information provided for the assignee of the entire interest *who properly became of record under 37 CFR 3.71,* or, if no assignee of the entire interest has properly been made of record, the most current address information provided for the first named inventor. 37 CFR 3.71(c) states:

> *An assignee becomes of record either in a national patent application or a reexamination proceeding by filing a statement in compliance with § 3.73(b) that is signed by a party who is authorized to act on behalf of the assignee.*

The assignee must establish its ownership of the patent to the satisfaction of the Director. In this regard, the statement under 37 CFR 3.73(b) must have either: (i) documentary evidence of a chain of title from the original owner to the assignee (*e.g.*, copy of an executed assignment), and a statement affirming that the documentary evidence of the chain of title from the original owner to the assignee was or concurrently is being submitted for recordation pursuant to § 3.11; or (ii) a statement specifying where documentary evidence of a chain

of title from the original owner to the assignee is recorded in the assignment records of the Office (*e.g.*, reel and frame number).

Therefore, as there is currently no Statement under 37 CFR 3.73(b) with the current assignee information of record in the instant application, the Office cannot change the correspondence address to the address on the Request to Withdraw at this present time.

All future communications from the Office will continue to be directed to the above-listed address until otherwise notified by applicant.

Telephone inquires concerning this decision should be directed to JoAnne Burke at 571-272-4584.

JoAnne Burke
Petitions Examiner
Office of Petitions

UNITED STATES PATENT AND TRADEMARK OFFICE

Commissioner for Patents
United States Patent and Trademark Office
P.O. Box 1450
Alexandria, VA 22313-1450
www.uspto.gov

ARENT FOX LLP
1050 CONNECTICUT AVENUE, N.W.
SUITE 400
WASHINGTON DC 20036

MAILED

AUG 09 2010

OFFICE OF PETITIONS

In re Application of	:	
Kentaro Komori, et al.	:	
Application No. 11/791,279	:	DECISION GRANTING PETITION
Filed: May 22, 2007	:	UNDER 37 CFR 1.313(c)(2)
Attorney Docket No. 106145-00123	:	

This is a decision on the petition under 37 CFR 1.313(c)(2), filed, August 9, 2010 to withdraw the above-identified application from issue after payment of the issue fee.

The petition is **GRANTED**.

The above-identified application is withdrawn from issue for consideration of a submission under 37 CFR 1.114 (request for continued examination). *See* 37 CFR 1.313(c)(2).

Petitioner is advised that the issue fee paid on July 2, 2010 cannot be refunded. If, however, this application is again allowed, petitioner may request that it be applied towards the issue fee required by the new Notice of Allowance.[1]

Telephone inquiries should be directed to Terri Johnson at (571) 272-2991.

This application is being referred to Technology Center AU 1783 for processing of the request for continued examination under 37 CFR 1.114 and for consideration of the concurrently filed information disclosure statement.

Terri Johnson

Terri Johnson
Petitions Examiner
Office of Petitions

---

[1] *The request to apply the issue fee to the new Notice may be satisfied by completing and returning the new Part B – Fee(s) Transmittal Form (along with any balance due at the time of submission). Petitioner is advised that the Issue Fee Transmittal Form* ***must*** *be completed and timely submitted to avoid abandonment of the application.*

UNITED STATES PATENT AND TRADEMARK OFFICE

Commissioner for Patents
United States Patent and Trademark Office
P.O. Box 1450
Alexandria, VA 22313-1450
www.uspto.gov

PATTON BOGGS LLP
8484 WESTPARK DRIVE
SUITE 900
MCLEAN, VA 22102

MAILED
APR 03 2012
OFFICE OF PETITIONS

In re Application of	:	
Shimon Eckhouse, et al.	:	
Application No. 11/791,448	:	DECISION ON PETITION
Filed: July 23, 2009	:	TO WITHDRAW
Attorney Docket No. 023372.0101P2US	:	FROM RECORD
	:	

This is a decision on the Request to Withdraw as attorney or agent of record under 37 C.F.R. § 1.36(b), filed February 9, 2012.

The request is **NOT APPROVED** because it is moot.

A review of the file record indicates that the power of attorney to Patton Boggs LLP has been revoked by the assignee of the patent application on February 29, 2012. Accordingly, the request to withdraw under 37 C.F.R. § 1.36(b) is moot.

All future communications from the Office will continue to be directed to the below-listed address until otherwise notified by applicant.

Telephone inquires concerning this decision should be directed to Terri Johnson at 571-272-2991.

/Terri Johnson/
Terri Johnson
Petitions Examiner
Office of Petitions

cc: **VENABLE LLP**
P.O. BOX 34385
WASHINGTON, DC 20043-9998

UNITED STATES PATENT AND TRADEMARK OFFICE

UNITED STATES DEPARTMENT OF COMMERCE
United States Patent and Trademark Office
Address: COMMISSIONER FOR PATENTS
P.O. Box 1450
Alexandria, Virginia 22313-1450
www.uspto.gov

APPLICATION NO.	FILING DATE	FIRST NAMED INVENTOR	ATTORNEY DOCKET NO.	CONFIRMATION NO.
11/791,492	05/24/2007	Naohisa Shibuya	08411.0066-00000	4248

7590 01/26/2011
FINNEGAN, HENDERSON, FARABOW, GARRETT & DUNNER LLP
901 NEW YORK AVENUE, NW
WASHINGTON, DC 20001-4413

EXAMINER
KUNTZ, CURTIS A

ART UNIT	PAPER NUMBER
2614	

MAIL DATE	DELIVERY MODE
01/26/2011	PAPER

DECISION DISMISSING PETITION UNDER 37 CFR 1.138(d)

The declaration of express abandonment will not be recognized

This is in response to the petition under 37 CFR 1.138(d), requesting for a refund of any previously paid search fee and excess claims fee in the above-identified application.

The petition is dismissed.

The express abandonment will **not** be recognized for the reason(s) indicated below:

1. ☐ The petition was not filed in sufficient time to permit the appropriate officials to recognize the abandonment before an examination has been made of the application. See 37 CFR 1.138(d).
2. ☐ The petition was not signed by a party authorized by 37 CFR 1.33(b)(1), (3) or (4).
3. ☑ The application is not an application filed under 35 U.S.C. 111(a) on or after December 8, 2004.
4. ☐ The petition for express abandonment under 1.138(d) is dismissed because the applicant did not pay any search fee and excess claims fees in the above-identified application.

Telephone inquiries should be directed to the Office of Data Management at (571) 272-4200.

Mimi Farmer

Patent Publication Branch
Office of Data Management

FORM PET651D (Rev. 08/07)

UNITED STATES PATENT AND TRADEMARK OFFICE

Commissioner for Patents
United States Patent and Trademark Office
P.O. Box 1450
Alexandria, VA 22313-1450
www.uspto.gov

February 14, 2012

FOLEY AND LARDNER LLP
SUITE 500
3000 K STREET NW
WASHINGTON DC 20007

Re Application of
UMEMOTO, NAOYUKI. ,Et Al.
Application: **11/791513**
Filed: **05/24/2007**
Attorney Docket No: **081356-0280**

: DECISION ON PETITION
: ACCEPTANCE OF COLOR
: DRAWINGS

This is a decision on the Petition to Accept Color Drawings under 37 C.F.R 1.84 (a) (2), received in the United States Patent and Trademark Office (USPTO) May 24, 2007.
The petition is **GRANTED**.
A grantable petition under 37 C.F.R. 1.84(a) (2) must be accompanied by the following.

1. The fee set forth under 37 C.F.R. 1.17(h),
2. Three (3) sets of the color drawings in question, or (1) set if filed via EFS, and
3. The specification containing the following language as the first paragraph in that portion of the specification relating to the brief description of the drawings.

   "The file of this patent contains at least one drawing executed in color. Copies of this patent with color drawing(s) will be provided by the Patent and Trademark Office upon request and payment of the necessary fee."

The petition was accompanied by all of the required fees and drawings. The specification contains the appropriate language. Therefore, the petition is GRANTED.

Telephone inquires relating to this decision may be directed to the undersigned in the Office of Data Management at 571-272-4200.

/Bernadette Queen/
Quality Control Specialist
Office of Data Management

UNITED STATES PATENT AND TRADEMARK OFFICE

Commissioner for Patents
United States Patent and Trademark Office
P.O. Box 1450
Alexandria, VA 22313-1450
www.uspto.gov

BIRCH STEWART KOLASCH & BIRCH
PO BOX 747
FALLS CHURCH, VA 22040-0747

MAILED
DEC 07 2010
OFFICE OF PETITIONS

In re Application of
Nobuyuki SEO, et *al.*
Application No. 11/791,533
Filed: May 24, 2007
Attorney Docket No. **4731-0165PUS1**

DECISION GRANTING PETITION
UNDER 37 CFR 1.313(c)(2)

This is a decision on the petition under 37 CFR 1.313(c)(2), filed December 6, 2010, to withdraw the above-identified application from issue after payment of the issue fee.

The petition is **GRANTED**.

The above-identified application is withdrawn from issue for consideration of a submission under 37 CFR 1.114 (request for continued examination). *See* 37 CFR 1.313(c)(2).

Petitioner is advised that the issue fee paid on November 10, 2010 cannot be refunded. If, however, this application is again allowed, petitioner may request that it be applied towards the issue fee required by the new Notice of Allowance.[1]

Telephone inquiries should be directed to the undersigned at (571) 272-7253.

This application is being referred to Technology Center AU 3656 for processing of the request for continued examination under 37 CFR 1.114 and for consideration of the concurrently filed information disclosure statement.

/Monica A. Graves/
Petitions Examiner, Office of Petitions

[1] *The request to apply the issue fee to the new Notice may be satisfied by completing and returning the new Part B – Fee(s) Transmittal Form (along with any balance due at the time of submission). Petitioner is advised that the Issue Fee Transmittal Form* ***must*** *be completed and timely submitted to avoid abandonment of the application.*

UNITED STATES PATENT AND TRADEMARK OFFICE

Commissioner for Patents
United States Patent and Trademark Office
P.O. Box 1450
Alexandria, VA 22313-1450
www.uspto.gov

HARNESS, DICKEY & PIERCE, P.L.C.
P.O. BOX 828
BLOOMFIELD HILLS, MI 48303

MAILED
NOV 04 2010
OFFICE OF PETITIONS

In re Application of	:	
Shigeki CHUJO, et *al.*	:	
Application No. 11/791,593	:	DECISION GRANTING PETITION
Filed: May 24, 2007	:	UNDER 37 CFR 1.313(c)(2)
Attorney Docket No. **1300-000039/US/NP**	:	

This is a decision on the petition under 37 CFR 1.313(c)(2), filed November 1, 2010, to withdraw the above-identified application from issue after payment of the issue fee.

The petition is **GRANTED**.

The above-identified application is withdrawn from issue for consideration of a submission under 37 CFR 1.114 (request for continued examination). *See* 37 CFR 1.313(c)(2).

Petitioner is advised that the issue fee paid on October 13, 2010 cannot be refunded. If, however, this application is again allowed, petitioner may request that it be applied towards the issue fee required by the new Notice of Allowance.[1]

Telephone inquiries should be directed to the undersigned at (571) 272-7253.

This application is being referred to Technology Center AU 3729 for processing of the request for continued examination under 37 CFR 1.114 and for consideration of the concurrently filed information disclosure statement.

/Monica A. Graves/
Petitions Examiner, Office of Petitions

---

[1] *The request to apply the issue fee to the new Notice may be satisfied by completing and returning the new Part B – Fee(s) Transmittal Form (along with any balance due at the time of submission). Petitioner is advised that the Issue Fee Transmittal Form* ***must*** *be completed and timely submitted to avoid abandonment of the application.*

UNITED STATES PATENT AND TRADEMARK OFFICE

Commissioner for Patents
United States Patent and Trademark Office
P.O. Box 1450

MAILED

NOV 01 2011

OFFICE OF PETITIONS

MARTIN D. MOYNIHAN d/b/a PRTSI, INC.
P.O. BOX 16446
ARLINGTON VA 22215

In re Application of	:	
Haim PERSKI et al.	:	ON PETITION
Application No. 11/791,861	:	
Filed: May 30, 2007	:	
Atty. Docket No.: 39359		

This is a decision on the petition, filed October 11, 2011, which is a petition under 37 CFR 1.181 (no fee) requesting withdrawal of the holding of abandonment in the above-identified application.

The petition is **GRANTED.**

The application was held abandoned for failure to reply in a timely manner to the final Office action mailed February 3, 2011, which set a shortened statutory period for reply of three (3) months. A Notice of Abandonment was mailed August 10, 2011.

Petition asserts that the final Office rejection was not received.

A review of the written record indicates no irregularity in the mailing of the Office action, and, in the absence of any irregularity, there is a strong presumption that the Office action was properly mailed to the practitioner at the address of record. This presumption may be overcome by a showing that the Office action was not in fact received. In this regard, the showing required to establish the failure to receive the Office action must consist of the following:

> (1) a statement from the practitioner describing the system used for recording for an Office action received at the correspondence address of record with the USPTO. The statement should establish that the docketing system is sufficiently reliable. It is expected that the record would include, but not limited to, the application number, attorney docket number, the mail date of the Office action and the due date for the response.
>
> (2) Practitioner must state that the Office action was not received at the correspondence address of record, and that a search of the practitioner's record(s),

including any file jacket or the equivalent, the application contents, indicates that the Office action was not received.

(3) A copy of the record(s) used by the practitioner where the non-received Office action would have been entered had it been received is required. A copy of the practitioner's record(s) required. A copy of the practitioner's record(s) required to show non-receipt of the Office action should include the master docket for the firm. That is, if a three month period for reply was set in the nonreceived Office action, a copy of the **master docket report** showing all replies docketed for a date three months from the mail date of the non received Office action must be submitted as documentary proof of nonreciept of the Office action. If no such master docket exists, the practitioner should so state and provide other evidence such as, but not limited to, the following: the application file jacket; incoming mail log; calendar; reminder system; or the individual docket record for the application in question. See MPEP § 711.03(c)(I)(A).

See MPEP §711.03(c) under subheading "Petition to Withdraw Holding of Abandonment Based on Failure to Receive Office Action," and "Withdrawing the Holding of Abandonment When Office Actions Are Not Received," 1156 Official Gazette 53 (November 16, 1993).

As the instant petition satisfies the indicated requirements, the holding of abandonment is withdrawn and the application is restored to pending status.

Telephone inquiries relating to this decision should be directed to Robert DeWitty, Petitions Attorney, Office of Petitions (571-272-8427).

The application file will be referred to the Technology Center Art Unit 2629 for further processing.

Ramesh Krishnamurthy

for Anthony Knight
Director
Office of Petitions

SPE RESPONSE FOR CERTIFICATE OF CORRECTION

Paper No.:

DATE 2/16/12

TO SPE OF : ART UNIT 2611

SUBJECT : Request for Certificate of Correction on Patent No.: 11791872

A response is requested with respect to the accompanying request for a certificate of correction.

Please complete this form and return with file, within **7** days to:
Certificates of Correction Branch - ST (South Tower) 9A22
Palm location **7590** - Tel. No. (703) 305-8309

With respect to the change(s) requested, correcting Office and/or Applicant's errors, should the patent read as shown in the certificate of correction? No new matter should be introduced, nor should the scope or meaning of the claims be changed.

Thank You For Your Assistance **Certificates of Correction Branch**

The request for issuing the above-identified correction(s) is hereby:

Note your decision on the appropriated box.

- [x] **Approved** All changes apply.
- [ ] **Approved in Part** Specify below which changes **do not** apply.
- [ ] **Denied** State the reasons for denial below.

Comments:

Shirley Zin

PTO/SB/44 (09-07)
Approved for use through 08/31/2013. OMB 0651-0033
U.S. Patent and Trademark Office; U.S. DEPARTMENT OF COMMERCE
Under the Paperwork Reduction Act of 1995, no persons are required to respond to a collection of information unless it displays a valid OMB control number.
(Also Form PTO-1050)

UNITED STATES PATENT AND TRADEMARK OFFICE
CERTIFICATE OF CORRECTION

PATENT NO. : 8,031,785

APPLICATION NO.: 11/791,872

ISSUE DATE : October 4, 2011

INVENTOR(S) : Shaomin Samuel Mo; Alexander D. Gelman

It is certified that an error appears or errors appear in the above-identified patent and that said Letters Patent is hereby corrected as shown below:

On the cover page, Item (60) is missing. It should read:

Related U.S. Application Data

(60) Provisional application No. 60/631,814, filed on November 30, 2004

MAILING ADDRESS OF SENDER (Please do not use customer number below):

This collection of information is required by 37 CFR 1.322, 1.323, and 1.324. The information is required to obtain or retain a benefit by the public which is to file (and by the USPTO to process) an application. Confidentiality is governed by 35 U.S.C. 122 and 37 CFR 1.14. This collection is estimated to take 1.0 hour to complete, including gathering, preparing, and submitting the completed application form to the USPTO. Time will vary depending upon the individual case. Any comments on the amount of time you require to complete this form and/or suggestions for reducing this burden, should be sent to the Chief Information Officer, U.S. Patent and Trademark Office, U.S. Department of Commerce, P.O. Box 1450, Alexandria, VA 22313-1450. DO NOT SEND FEES OR COMPLETED FORMS TO THIS ADDRESS. SEND TO: **Attention Certificate of Corrections Branch, Commissioner for Patents, P.O. Box 1450, Alexandria, VA 22313-1450.**

If you need assistance in completing the form, call 1-800-PTO-9199 and select option 2.

UNITED STATES PATENT AND TRADEMARK OFFICE

Commissioner for Patents
United States Patent and Trademark Office
P.O. Box 1450
Alexandria, VA 22313-1450
www.uspto.gov

Date Mailed : November 3, 2011
Serial No. : 11/792038
Patent No. :7,838,010
Patent Issued : November 23, 2010
Inventor(s) :Giuliano Bensi, et al.
Title :IMMUNOGENIC AND THERAPEUTIC COMPOSITIONS STREPTOCOCCUS PYOGENES

Re: Request for Certificate of Correction

Respecting the alleged error(s) in the Attorney, Agent, or Firm, since the Attorney, Agent, or Firm is printed *solely* in accordance with the PTOL-85b (Issue Fee Transmittal), submitted at time of payment of the base issue fee, no correction is in order here under the provisions of Rules 1.322.

In view of the foregoing, your request is hereby denied.

If, the petition under 37 CFR 1.182 (required fee currently $130), is filed and granted, the patentee would be entitled to a certificate of correction under 37 CFR 1.323 (required fee currently $100).

Magdalene Talley
For Mary Diggs, Supervisor
Decisions and Certificate
Of Correction Branch
(703)756-1540
FAX 571-270-9942

Novartis Vaccines and Diagnostics Inc.
Intellectual Property-X100b
P.O. Box 8097
Emeryville, CA 94662-8097

MD/mt

UNITED STATES PATENT AND TRADEMARK OFFICE

UNITED STATES DEPARTMENT OF COMMERCE
United States Patent and Trademark Office
Address: COMMISSIONER FOR PATENTS
P.O. Box 1450
Alexandria, Virginia 22313-1450
www.uspto.gov

APPLICATION NO.	FILING DATE	FIRST NAMED INVENTOR	ATTORNEY DOCKET NO.	CONFIRMATION NO.
11/792,039	06/01/2007	Hiroyuki Higashino	12480-000231/US	7087

30593 7590 06/06/2011
HARNESS, DICKEY & PIERCE, P.L.C.
P.O. BOX 8910
RESTON, VA 20195

EXAMINER
BOLOTIN, DMITRIY

ART UNIT	PAPER NUMBER
2629	

MAIL DATE	DELIVERY MODE
06/06/2011	PAPER

Please find below and/or attached an Office communication concerning this application or proceeding.

The time period for reply, if any, is set in the attached communication.

UNITED STATES PATENT AND TRADEMARK OFFICE

Commissioner for Patents
United States Patent and Trademark Office
P.O. Box 1450
Alexandria, VA 22313-1450
www.uspto.gov

MAIL

JUN 06 2011

DIRECTOR'S OFFICE
TECHNOLOGY CENTER 2600

HARNESS, DICKEY & PIERCE, P.L.C.
P.O. BOX 8910
RESTON VA 20195

In re Application of
HIGASHINO, HIROYUKI et al.
Application No. 11/792,039
Filed: June 01, 2007
For: **LIQUID CRYSTAL DISPLAY DEVICE AND LIQUID CRYSTAL DISPLAY DRIVING CIRCUIT**

DECISION ON PETITION
TO RESTART PERIOD

This is a decision on the Petition to Reset the Period for Reply treated under 37 CFR § 1.181(a) filed May 06, 2011. No fee is required.

Petitioner alleges non-receipt of the Miscellaneous Office action mailed December 08, 2010. In support of the petition, petitioner has provided a statement that the office communication was not received by the petitioner. On April 22, 2011 petitioner states, a routine review of the applications status by accessing the PAIR database, was performed. It was at that time when applicants noticed an office action was mailed on December 08, 2010. A copy of the docket record where the non-receipt office communication would have been entered had it been received and docketed was also provided.

Although there was no finding of irregularity in the mailing the Office action on the part of U.S. Patent and Trademark Office, there is a showing of non-receipt of the Office action in view of the supporting documents filed with this instant petition.

In view of the above, the petition is **GRANTED.**

The application file will be forwarded to the Technology Center's technical support staff for re-mailing of the Miscellaneous Office action originally mailed on December 08, 2010. The shortened statutory period of **ONE (1) MONTH** or **THIRTY (30) DAYS** will be set to begin as of the mailing thereof.

/Michael Horabik/

Michael Horabik
Quality Assurance Specialist
Technology Center 2600
Communications

SPE RESPONSE FOR CERTIFICATE OF CORRECTION

DATE : August 23, 2011

TO SPE OF : ART UNIT 2624

SUBJECT : Request for Certificate of Correction for Appl. No.: 11/792,084 Patent No.: 7957557

CofC mailroom date: 07/26/11

Please respond to this request for a certificate of correction within 7 days.

FOR IFW FILES:

Please review the requested changes/corrections as shown in the **COCIN** document(s) in the IFW application image. No new matter should be introduced, nor should the scope or meaning of the claims be changed.

Please complete the response (see below) and forward the completed response to scanning using document code **COCX**.

FOR PAPER FILES:

Please review the requested changes/corrections as shown in the attached certificate of correction. Please complete this form (see below) and forward it with the file to:

Certificates of Correction Branch (CofC)
Randolph Square – 9D10-A
Palm Location 7580

Note: Should the changes be made?

RoChaun Hardwick
Certificates of Correction Branch
571 272-0470

Thank You For Your Assistance

The request for issuing the above-identified correction(s) is hereby:
Note your decision on the appropriate box.

- [x] **Approved** — All changes apply.
- [ ] **Approved in Part** — Specify below which changes **do not** apply.
- [ ] **Denied** — State the reasons for denial below.

Comments:

SPE 2624

SPE Art Unit

HARNESS DICKEY

Harness Dickey & Pierce PLC
Attorneys and Counselors
5445 Corporate Drive, Suite 200
Troy, Michigan 48098-2683
Phone: 248-641-1600 Fax: 248-641-0270
Metropolitan: Detroit Portland, OR St. Louis Washington, DC

DATE:	March 5, 2012	NO. OF PAGES (INCLUDING THIS PAGE):	13

FOR:	Examiner Evans		ORIGINAL WILL FOLLOW BY: ☐ REGULAR MAIL ☐ OVERNIGHT MAIL ☐ COURIER ☒ WILL NOT FOLLOW
COMPANY:	USPTO		
FAX NO.:	571-270-4929	PHONE:	

FROM:	Brent G. Seitz

Please let us know by phone or fax if you do not receive any of these pages.

COMMENTS:

FOR DISCUSSION PURPOSES ONLY – DO NOT ENTER IN FILE

Examiner Evans:

In preparation for our interview Wednesday, March 7, 2012 at 1:00PM, please consider the attached, which is provided for discussion purposes only and should not be entered in the file.

As you requested, we will call Examiner Plucinski for the interview at 571-272-6811.

Thank you,

Brent Seitz

NOTICE

The information contained in this fax transmission is intended only for the individual to whom or entity to which it is addressed. It may also contain privileged, confidential, attorney work product or trade secret information which is protected by law. If the reader of this message is not the intended recipient, or an employee or agent responsible for delivering the message to the addressee, the reader is hereby notified that any dissemination, distribution, or copying of this communication is strictly prohibited. If you have received this communication in error, please immediately notify us by telephone and return the original message to us at the address above via the U.S. Postal Service. We will reimburse you for any reasonable expense (including postage) for the return of the original message.

FOR DISCUSSION PURPOSES ONLY – DO NOT ENTER IN FILE

HARNESS DICKEY

Memo

To: Examiners Evans and Plucinski

From: Brent G. Seitz

Date: March 5, 2011

Re: Interview for US Application No. 11/792,126; Atty. Ref. No. 6281-000048/US/NP

Examiner Evans:

In preparation for our interview scheduled for March 7, 2012 at 1PM, please consider the below remarks and attached proposed claim amendments.

Independent Claim 11

Independent Claim 11 remains rejected under 35 U.S.C. § 102 in view of the Skinner reference (U.S. Pub. No. 2003/0171960). Independent Claims 12 and 19 now stand rejected under 35 U.S.C. § 103(a) as unpatentable over Skinner in view of Sehr (U.S. Pub. No. 2001/0018660). Claims 12 and 19 were previously rejected under Section 102 in view of Skinner alone.

Skinner discloses an electronic ticket issuing system. The system generally includes, with reference to Figure 1 for example, a user terminal 110, a vendor terminal 120, and a venue terminal 130. To purchase a ticket, a user sends a purchase request

PAGE 2/13 * RCVD AT 3/5/2012 12:41:20 PM [Eastern Standard Time] * SVR:W-PTOFAX-001/42 * DNIS:2704929 * CSID:12486410270 * DURATION (mm-ss):02-56

and his/her user identifier to the vendor terminal, where the information is stored. An electronic ticket is transmitted from the vendor terminal 120 to the user terminal 110. To gain entry to a venue, the user presents his/her user identifier to the venue terminal 130. The venue terminal 130 sends an inquiry to the vendor terminal 120 to determine whether the user is on record as having purchased a ticket. If the user is authenticated, then an attendant will allow the user to enter. If the venue has assigned seating, then seat information can be displayed on the user's display unit. The Office Action specifically cited the following portion of paragraph 53 in the rejection of Claim 11: "when the event venue has assigned seating, such reserved seating information may be included in the electronic ticket issuing information, and said reserved seating information may be displayed on display unit of user terminal 110 (not shown) to allow verification of entrant's seat."

According to the Office Action, the above-cited portion of paragraph 53 discloses the following features of independent Claim 11: "generating said verification data telegram including a validity signal that is capable of being verified by a controller without a separate control apparatus, the validity signal is generic to a plurality of electronic tickets." But seating information is *unique* to a particular ticket holder, not "*generic* to a plurality of said electronic tickets" as claimed. It appears that the Skinner reference is not being properly applied.

Independent Claims 12 and 19

With respect to the rejection of Claims 12 and 19, the Office Action acknowledges that Skinner fails to disclose or alone suggest "transmitting a verification data telegram

PAGE 3/13 * RCVD AT 3/5/2012 12:41:20 PM [Eastern Standard Time] * SVR:W-PTOFAX-001/42 * DNIS:2704929 * CSID:12486410270 * DURATION (mm-ss):02-56

from a device to the user terminal, the verification data telegram including a validity signal that is capable of being verified by a controller without a separate control apparatus, the validity signal is generic to a plurality of the electronic tickets," which appears contrary to the Office Action's rejection of Claim 11. The Office Action asserts that the newly cited Sehr reference discloses these features.

The Sehr reference discloses an electronic ticketing system including an admission center 2, which could be stationed at a stadium for example. As illustrated in Figure 2, the admission center includes card slots 102, 103, a user interface 100, a banking module 106, and a seating map 101. The Office Action specifically cited paragraphs 5, 35, and 48 of Sehr. These paragraphs generally disclose use of the admission center to purchase admission to an event. For example, the user can insert visitor card 11 into card slot 102/103 and select a particular seat in the stadium using the seating map 101. The seat selection can either be shown on a display of the card, or the admission center can print the seat assignment on a sticker, which can be applied to the card. The Office Action's rejection is unclear, but it appears that it is asserting that the seat selection discloses the claimed verification data telegram including a generic validity signal. The Office Action appears to not be properly considering the difference between unique seat selection information and the claimed generic validity signal.

Proposed Claim Amendments

It is a general basic concept of the invention that the inventive method can be executed independent from registration at an entrance or exit. Moreover, no user data is

PAGE 4/13 * RCVD AT 3/5/2012 12:41:20 PM [Eastern Standard Time] * SVR:W-PTOFAX-001/42 * DNIS:2704929 * CSID:12486410270 * DURATION (mm-ss):02-56

entered. The invention is suited to be used in open systems, which do not need registration. Such systems are very popular in Europe, for example. Tickets are only controlled by controllers entering public transport means from time to time.

The Sehr reference is related to a ticketing system and methods intended to be used throughout the leisure and entertainment industry. Sehr discloses providing users with user terminals in the form of smart cards, which are provided so that the user can buy goods and services with the smart card and can use the smart card to pass through entrance or exit gates. An operating system has all data related to the users, especially private user-related data and the like. Moreover, all subsidiary providing products or services, and all entrance and exit gates are in communication with said system. So, the system knows all details of every user.

The proposed amendments to Claim 11 clarify that the invention is directed to checking validity of electronic tickets for public transport means. *The method is adapted for use in open systems, which lack entrance and/or exit gates or the like*. Consequently, checking ticket validity is executed during use of the public transport means by the user, *i.e.*, when the user is on board of the public transport means, without passing through an entrance gate or the like. Skinner fails to disclose checking of tickets during use of public transport means by a user, which is why pending Claim 11 and also amended Claim 11 are new over Skinner. Moreover, Skinner fails to disclose a validity signal which is generic to a plurality of electronic tickets. Skinner discloses an individual seat indication signal, *which is*

PAGE 5/13 * RCVD AT 3/5/2012 12:41:20 PM [Eastern Standard Time] * SVR:W-PTOFAX-001/42 * DNIS:2704929 * CSID:12486410270 * DURATION (mm-ss):02-56

not generic to a plurality of electronic tickets. Therefore, the invention according to the amended set of claims is new over the cited art.

With respect to the Section 103 rejection of Claims 12 and 19, as discussed above, Skinner fails to disclose the feature of checking validity of an electronic ticket allocated to a user terminal used within a system for automatic detection of a use of a public transport means and/or for calculating a fare for use of a transport means. Skinner further fails to disclose that the device is placed inside the transport means. Moreover, Skinner does not disclose a validity signal generic to a plurality of electronic tickets, which is contained in a generated verification data telegram. Consequently, Skinner fails to disclose the method steps related to the verification data telegram and emitting the validity signal. According to the description page 3, first and second paragraph, these features are connected with the advantage that checking of validity of electronic tickets can be achieved during use of said public transport means by any user at any time. This allows the method to be applied to open systems, which do not use entrance or exit gates or the like. It is therefore the object of the invention to provide a simple easy applicable method for checking validity of tickets during use of a transport means by users. This object is solved by the subject matter of the amended set of claims.

With respect to Skinner, it fails to suggest application of its teachings to public transport means because Skinner teaches the ticket to be verified at entrance gates by gate attendants (*see* Skinner, page 1, paragraph 9, last sentence). So, the teachings of Skinner are generally different from the claimed invention. For example, Skinner fails to teach or

PAGE 6/13 * RCVD AT 3/5/2012 12:41:20 PM [Eastern Standard Time] * SVR:W-PTOFAX-001/42 * DNIS:2704929 * CSID:12486410270 * DURATION (mm-ss):02-56

suggest checking the validity of a ticket during use of a service. One skilled in the art would not have found it obvious to apply the teachings of Skinner to use of a public transport means.

Skinner in combination with Sehr also fails to render the invention obvious. Sehr and Skinner relate to similar systems, which require a card holder to present his/her card for verification at entrance gates (*see* Sehr, page 13, paragraphs 92 to 94). Therefore, further consideration of Sehr does not motivate those skilled in the art to amend the teaching of Skinner in the way of the invention. For example, Sehr fails to disclose a device capable of transmitting a verification data telegram, which device is placed inside to a transport means, as well as the method steps related with the validity signal and its processing.

PAGE 7/13 * RCVD AT 3/5/2012 12:41:20 PM [Eastern Standard Time] * SVR:W-PTOFAX-001/42 * DNIS:2704929 * CSID:12486410270 * DURATION (mm-ss):02-56

FOR DISCUSSION PURPOSES ONLY – DO NOT ENTER IN FILE

AMENDMENTS TO THE CLAIMS

The following listing of claims will replace all prior versions and listings of claims in the application.

LISTING OF CLAIMS

1. (Cancelled)

2. (Previously Presented) The method according to claim 11, wherein the validity signal that is emitted by the user terminal is transmitted to the user terminal together with the verification data telegram.

3. (Previously Presented) The method according to claim 11, wherein the verification data telegram is emitted when pre-determined events happen and/or in pre-determined time intervals.

4. (Previously Presented) The method according to claim 11, wherein the verification data telegram is only transmitted to such user terminals that have already received and/or transmitted account relevant signals before the receipt of the verification data telegram.

5. (Previously Presented) The method according to claim 11, wherein the validity signal is emitted from the user terminal only if the user terminal previously

PAGE 8/13 * RCVD AT 3/5/2012 12:41:20 PM [Eastern Standard Time] * SVR:W-PTOFAX-001/42 * DNIS:2704929 * CSID:12486410270 * DURATION (mm-ss):02-56

received and/or transmitted account relevant signals before receipt of the verification data telegram.

6. (Previously Presented) The method according to claim 11, wherein the validity signal comprises a validity code.

7. (Previously Presented) The method according to claim 6, wherein the validity code is varied.

8. (Previously Presented) The method according to claim 11, wherein the validity signal is output via the display on the user terminal.

9. (Previously Presented) The method according to claim 11, wherein the validity signal can be verified by means of a control device.

10. (Previously Presented) The method according to claim 2, wherein the verification data telegram is emitted when pre-determined events happen and/or in pre-determined time intervals.

PAGE 9/13 * RCVD AT 3/5/2012 12:41:20 PM [Eastern Standard Time] * SVR:W-PTOFAX-001/42 * DNIS:2704929 * CSID:12486410270 * DURATION (mm-ss):02-56

FOR DISCUSSION PURPOSES ONLY – DO NOT ENTER IN FILE

11. (Currently Amended) A method for checking validity of an electronic ticket allocated to a user terminal used within a system for automatic detection of a use of a transport means and/or for calculating a fare for a use of a transport means, the method comprising:

providing said user terminal used within said system, the user terminal including a display, wherein said user terminal is carried along by the user using said transport means;

allocating said electronic ticket to a user terminal used within said system, the user terminal including a display, the electronic ticket unique to a user of the user terminal;

providing a device capable of transmitting a verification data telegram, which device is placed inside said transport means;

generating said verification data telegram including a validity signal that is capable of being verified by a controller without a separate control apparatus, the validity signal is generic to a plurality of said electronic tickets;

transmitting said verification data telegram by the device;

receiving the verification data telegram by the user terminal; ~~and~~

emitting the validity signal from the user terminal optically on the display and/or acoustically, the validity signal represents the validity of the electronic ticket; and

verifying the validity signal by the user himself or the controller inside of said transport means.

PAGE 10/13 * RCVD AT 3/5/2012 12:41:20 PM [Eastern Standard Time] * SVR:W-PTOFAX-001/42 * DNIS:2704929 * CSID:12486410270 * DURATION (mm-ss):02-56

FOR DISCUSSION PURPOSES ONLY – DO NOT ENTER IN FILE

12. (Currently Amended) A method for checking validity of an electronic ticket allocated to a user terminal used within a system for automatic detection of a use of a transport means and/or calculating a fare for a use of a transport means, the method comprising:

transmitting an electronic ticket to a user terminal including a display, the electronic ticket unique to a user of the user terminal, wherein said user terminal is carried along by the user using said transport means;

transmitting a verification data telegram from a device placed inside said transport means to the user terminal, the verification data telegram including a validity signal that is capable of being verified by a controller without a separate control apparatus, the validity signal is generic to a plurality of the electronic tickets;

receiving the verification data telegram at the user terminal; ~~and~~

emitting the validity signal from the user terminal at least one of optically on the display or acoustically, the validity signal represents validity of the electronic ticket; and

verifying the validity signal by the user himself or the controller.

13. (Previously Presented) The method of Claim 12, wherein the validity signal is configured to be verified manually by the controller at least one of visually or audibly, and the controller includes an attendant.

PAGE 11/13 * RCVD AT 3/5/2012 12:41:20 PM [Eastern Standard Time] * SVR:W-PTOFAX-001/42 * DNIS:2704929 * CSID:12486410270 * DURATION (mm-ss):02-56

FOR DISCUSSION PURPOSES ONLY – DO NOT ENTER IN FILE

14. (Previously Presented) The method of Claim 12, further comprising manually determining validity of the electronic ticket based whether the validity signal is present or absent.

15. (Previously Presented) The method of Claim 12, wherein the validity signal comprises a numeric code.

16. (Previously Presented) The method of Claim 12, wherein the validity signal comprises a color code displayed on the display.

17. (Previously Presented) The method of Claim 12, wherein the validity signal comprises a non-numeric symbol.

18. (Previously Presented) The method of Claim 12, further comprising only transmitting the verification data telegram to the user terminal if the user terminal previously received or transmitted account data.

PAGE 12/13 * RCVD AT 3/5/2012 12:41:20 PM [Eastern Standard Time] * SVR:W-PTOFAX-001/42 * DNIS:2704929 * CSID:12486410270 * DURATION (mm-ss):02-56

FOR DISCUSSION PURPOSES ONLY – DO NOT ENTER IN FILE

19. (Currently Amended) A method for checking validity of an electronic ticket for use of a transport means and/or calculating a fare for use of a transport means, the method comprising:

transmitting an electronic ticket to a mobile telephone of a user, the electronic ticket unique to a user of the mobile telephone, wherein said mobile telephone is carried along by the user using said transport means;

transmitting a verification data telegram from a device placed inside said transport means to the mobile telephone, the verification data telegram including a validity signal that is configured to be verified manually without a separate electronic apparatus, the validity signal is generic to a plurality of the electronic tickets;

receiving the verification data telegram at the mobile telephone; and

displaying the validity signal on a display of the mobile telephone to visually identify that the electronic ticket is valid.

20. (Previously Presented) The method of Claim 19, wherein the validity signal is at least one of a numeric code, a color code, or a non-numeric symbol.

21. (Previously Presented) The method of Claim 19, wherein the verification data telegram is transmitted to the mobile telephone after the mobile telephone has one of received or transmitted account data.

PAGE 13/13 * RCVD AT 3/5/2012 12:41:20 PM [Eastern Standard Time] * SVR:W-PTOFAX-001/42 * DNIS:2704929 * CSID:12486410270 * DURATION (mm-ss):02-56

UNITED STATES PATENT AND TRADEMARK OFFICE

Commissioner for Patents
United States Patent and Trademark Office
P.O. Box 1450
Alexandria, VA 22313-1450
www.uspto.gov

MAIL

NOV 17 2010

DIRECTOR'S OFFICE
TECHNOLOGY CENTER 2600

BIRCH STEWART KOLASCH & BIRCH
PO BOX 747
FALLS CHURCH VA 22040-0747

In re Application of	:	
YABASHI, HIROYUKI et al.	:	DECISION ON REQUEST TO
Application No. 11/792,148	:	PARTICIPATE IN PATENT
Filed: June 01, 2007	:	PROSECUTION HIGHWAY
Attorney Docket No. 1163-0615PUS1	:	PROGRAM AND PETITION
	:	TO MAKE SPECIAL UNDER
	:	37 CFR 1.102(d)

This is a decision on the request to participate in the Patent Prosecution Highway (PPH) program and the petition under 37 CFR 1.102(d), filed October 13, 2010 to make the above-identified application special.

The request and petition are **GRANTED**.

A grantable request to participate in the PPH program and petition to make special require:

(1) The U.S. application must validly claim priority under 35 U.S.C. 119(a) to one or more applications filed in the JPO;
(2) Applicant must submit a copy of the allowable/patentable claim(s) from the JPO application(s) along with an English translation thereof and a statement that the English translation is accurate;
(3) All the claims in the U.S. application must sufficiently correspond or be amended to sufficiently correspond to the allowable/patentable claim(s) in the JPO application(s);
(4) Examination of the U.S. application has not begun;
(5) Applicant must submit a copy of all the office actions from each of the JPO application(s) containing the allowable/patentable claim(s) along with an English translation thereof and a statement that the English translation is accurate; and
(6) Applicant must submit an IDS listing the documents cited by the JPO examiner in the JPO office action along with copies of documents except U.S. patents or U.S. patent application publications.

The request to participate in the PPH program and petition comply with the above requirements. Accordingly, the above-identified application has been accorded "special" status.

Telephone inquiries concerning this decision should be directed to Michael Horabik at 571-272-3068.

All other inquiries concerning the examination or status of the application should be directed to Patent Application Information Retrieval (PAIR) system.

The application is being forwarded to the examiner for action on the merits commensurate with this decision.

/Michael Horabik/

Michael Horabik
Quality Assurance Specialist
Technology Center 2600
Communications

UNITED STATES PATENT AND TRADEMARK OFFICE

Commissioner for Patents
United States Patent and Trademark Office
P.O. Box 1450
Alexandria, VA 22313-1450
www.uspto.gov

Nixon Peabody LLP
P.O. Box 60610
Palo Alto CA 94306

MAILED

DEC 01 2010

OFFICE OF PETITIONS

In re Application of	:	
Eric Soccard	:	
Application No. 11/792,151	:	ON PETITION
Filed: May 31, 2007	:	
Attorney Docket No. 434299-761	:	

This is a decision on the petition under the unintentional provisions of 37 CFR 1.137(b), filed November 2, 2010, to revive the above-identified application.

The petition is **GRANTED**.

The application became abandoned for failure to timely file a reply within the meaning of 37 CFR 1.113 to the final Office action of April 6, 2010. The proposed reply required for consideration of a petition to revive must be a Notice of Appeal (and appeal fee required by 37 CFR 41.20(b)(2), an amendment that *prima facie* places the application in condition for allowance, a Request for Continued Examination and submission (37 CFR 1.114), or the filing of a continuing application under 37 CFR 1.53(b). See MPEP 711.03(c)(III)(A)(2). A three (3) month extension of time pursuant to the provisions of 37 CFR 1.136(a) were obtained. Accordingly, the date of abandonment of this application is October 7, 2010. The Notice of Abandonment was mailed October 19, 2010.

The petition satisfies the requirements of 37 CFR 1.137(b) in that petitioner has supplied (1) the reply in the form of a Request for Continued Examination (RCE) and fee of $810, and the submission required by 37 CFR 1.114; (2) the petition fee of $1,620; and (3) a proper statement of unintentional delay.

The application file does not indicate a change of address has been filed in this case, although the address given on the petition differs from the address of record. A change of address should be filed in this case in accordance with MPEP 601.03. A courtesy copy of this decision is being mailed to the address noted on the petition. However, until otherwise instructed, all future correspondence regarding this application will be mailed solely to the address of record.

Telephone inquiries concerning this decision should be directed to the undersigned at (571) 272-2991.

This application is being referred to Technology Center AU 1744 for processing of the RCE and for appropriate action by the Examiner in the normal course of business on the amendment submitted in accordance with 37 CFR 1.114.

/Terri Johnson/
Terri Johnson
Petitions Examiner
Office of Petitions

cc: **Suvashis Bhattacharya**
2 Palo Alto Square
3000 El Camino Real, Suite 500
Palo Alto, CA 94306

UNITED STATES PATENT AND TRADEMARK OFFICE

UNITED STATES DEPARTMENT OF COMMERCE
United States Patent and Trademark Office
Address: COMMISSIONER FOR PATENTS
P.O. Box 1450
Alexandria, Virginia 22313-1450
www.uspto.gov

APPLICATION NO.	FILING DATE	FIRST NAMED INVENTOR	ATTORNEY DOCKET NO.	CONFIRMATION NO.
11/792,165	03/19/2008	Jurgen Lander	10191/4651	2145

26646 7590 02/07/2011
KENYON & KENYON LLP
ONE BROADWAY
NEW YORK, NY 10004

EXAMINER
KIM, CHRISTOPHER S

ART UNIT	PAPER NUMBER
3752	

MAIL DATE	DELIVERY MODE
02/07/2011	PAPER

Please find below and/or attached an Office communication concerning this application or proceeding.

The time period for reply, if any, is set in the attached communication.

UNITED STATES PATENT AND TRADEMARK OFFICE

Commissioner for Patents
United States Patent and Trademark Office
P.O. Box 1450
Alexandria, VA 22313-1450
www.uspto.gov

KENYON & KENYON LLP
ONE BROADWAY
NEW YORK NY 10004

In re Application of:
LANDER, JURGEN et al
Serial No.: 11/792,165
Filed: June 1, 2007
Docket: 10191/4651
Title: INJECTION VALVE

Decision on Petition

This is a decision on the request filed Jan. 25, 2011 to withdraw holding of abandonment and accept a duplicate copy of the response mailed on June 4, 2010. This request is being considered pursuant to 37 CFR 1.181. No fee is required.

The petition is **GRANTED**.

The application was held technically abandoned for failure to timely respond to the Office Action mailed on March 4, 2010. Notice of abandonment was not mailed.

Petitioner asserts that a response to the March 4, 2010 Office action was timely filed on June 4, 2010. In response, the petitioner has enclosed a copy of the response bearing a certificate of mailing showing the date of June 4, 2010 and signed by a patent attorney, Mr. Aaron C. Deditch.

37 CFR §1.8(b) states:

> In the event that correspondence is considered timely filed by being mailed or transmitted in accordance with paragraph (a) of this section, but not received in the U.S. Patent and Trademark Office after a reasonable amount of time has elapsed from the time of mailing or transmitting of the correspondence, or after the application is held to be abandoned, or after the proceeding is dismissed, terminated, or decided with prejudice, the correspondence will be considered timely if the party who forwarded such correspondence:
> (1) Informs the Office of the previous mailing or transmission of the correspondence promptly after becoming aware that the Office has no evidence of receipt of the correspondence;
> (2) Supplies an additional copy of the previously mailed or transmitted correspondence and certificate; and
> (3) Includes a statement which attests on a personal knowledge basis or to the satisfaction of the Director to the previous timely mailing or transmission. If the correspondence was sent by facsimile transmission, a copy of the sending unit's report confirming transmission may be used to support this statement.

In light of the evidence submitted and satisfied the provisions of 37 CFR § 1.8(b), there is no abandonment in fact. As such, the holding of abandonment is in error and is hereby vacated. Any inconvenience to the applicant is regrettable.

A two-month of extension fee is charged to the Deposit Account 110600 as authorized in the response.

This application is being forwarded to the examiner via the Supervisory Patent Examiner for appropriate action. Any inquiry regarding this decision should be directed to Henry C. Yuen, Special Programs Examiner at (571) 272-4856.

PETITION GRANTED

Donald T. Hajec, Director
Technology Center 3700

UNITED STATES PATENT AND TRADEMARK OFFICE

Commissioner for Patents
United States Patent and Trademark Office
P.O. Box 1450
Alexandria, VA 22313-1450
www.uspto.gov

Robert D. Shedd, Patent Operations
THOMSON Licensing LLC
P.O. Box 5312
Princeton NJ 08543-5312

MAILED

FEB 18 2011

OFFICE OF PETITIONS

In re Application of :
Curtis, et al. :
Application No. 11/792,205 : ON PETITION
Filed: May 31, 2007 :
Attorney Docket No. PU040338 :

This is a decision on the petition, filed November 22, 2010, which is being treated as a petition under 37 CFR 1.137(b) to revive the instant nonprovisional application for failure to timely notify the U.S. Patent and Trademark (USPTO) of the filing of an application in a foreign country, or under a multinational treaty that requires publication of applications eighteen months after filing. *See* 37 CFR 1.137(f).

The petition is **DISMISSED**.

Any request for reconsideration of this decision must be submitted within TWO (2) MONTHS from the mail date of this decision. Extensions of time under 37 CFR 1.136(a) are permitted. The reconsideration request should include a cover letter entitled "Renewed Petition under 37 CFR 1.137(b)." This is **not** a final agency action within the meaning of 5 U.S.C. § 704. No additional petition fee is required.

Petitioner states that the instant non-provisional application is the subject of an application filed in a foreign country and the U. S. Patent and Trademark Office was unintentionally not notified of this filing within 45 days subsequent to the filing of the subject application in a foreign country. However, petitioner has not provided the exact filing date of the foreign application. Before a proper determination on the merits of the petition can be decided, petitioner must supply the filing date of the foreign application.

The address cited on the petition differs from the address of record. While a courtesy copy of this decision is being mailed to the person signing the instant petition, all future correspondence will be directed to the address of currently of record until such time as appropriate instructions are received to the contrary.

Further correspondence with respect to this matter should be addressed as follows:

By mail: Mail Stop PETITION
Commissioner for Patents

Post Office Box 1450
Alexandria, VA 22313-1450

By Fax: (571) 273-8300
ATTN: Office of Petitions

Telephone inquiries concerning this decision should be directed to the undersigned at (571) 272-

/Kenya A. McLaughlin/

Kenya A. McLaughlin
Petitions Attorney
Office of Petitions

Cc:
Brian Cromarty
2 Independence Way
Princeton, NJ 08543

UNITED STATES PATENT AND TRADEMARK OFFICE

Commissioner for Patents
United States Patent and Trademark Office
P.O. Box 1450
Alexandria, VA 22313-1450
www.uspto.gov

Robert D. Shedd, Patent Operations
THOMSON Licensing LLC
P.O. Box 5312
Princeton NJ 08543-5312

MAILED
APR 19 2011
OFFICE OF PETITIONS

In re Application of :
Curtis, et al. :
Application No. 11/792,205 : ON PETITION
Filed: May 31, 2007 :
Attorney Docket No. PU040338 :

This is a decision on the petition under 37 CFR 1.137(b), filed March 2, 2011, to revive the above-identified application.

The petition is **GRANTED**.

This application became abandoned for failure to file a timely and proper response to the final Office action mailed May 11, 2010, which set a shortened statutory period for reply of three months from its mailing date. The application became abandoned on August 12, 2010.

The Request for Continued Examination filed November 22, 2010, is noted.

The request for an extension of time within the third month is noted, but cannot be granted because the request was made outside the maximum statutory period for reply to the final Office action. The amount of $1,110.00 will be refunded, in due course.

The address cited on the petition differs from the address of record. While a courtesy copy of this decision is being mailed to the person signing the instant petition, all future correspondence will be directed to the address of currently of record until such time as appropriate instructions are received to the contrary.

The application file is being forwarded to Technology Center, GAU 2424 for further processing.

Telephone inquiries concerning this decision should be directed to the undersigned at (571) 272-3222.

/Kenya A. McLaughlin/

Kenya A. McLaughlin
Petitions Attorney
Office of Petitions

Cc:

Joseph Opalach
2 Independence Way, suite 200
Princeton, NJ 08543

UNITED STATES PATENT AND TRADEMARK OFFICE

Commissioner for Patents
United States Patent and Trademark Office
P.O. Box 1450
Alexandria, VA 22313-1450
www.uspto.gov

MAILED

MAR 15 2011

OFFICE OF PETITIONS

MIDDLETON & REUTLINGER
2500 BROWN & WILLIAMSON TOWER
(401 S. 4TH STREET, SUITE 2500)
LOUISVILLE KY 40202

In re Application of	:	
Robertson-Young, Adam.	:	
Application No. 11/792,441	:	ON PETITION
Filed: August 15, 2007	:	
Attorney Docket No. ZQ437/07001	:	

This is a decision on the petition under 37 C.F.R. § 1.137(b), filed August 24, 2010, to revive the above-identified application.

The petition is **GRANTED**.

The petition satisfies the requirements of 37 CFR 1.137(b) in that petitioner has supplied (1) the reply in the form of an Amendment, (2) the petition fee of $810.00, and (3) a proper statement of unintentional delay.

Telephone inquiries concerning this decision should be directed to the undersigned at (571) 272-3206.

This matter is being referred to Technology Center AU 1715 for further examination on the merits.

Liana Walsh
Petitions Examiner
Office of Petitions

SPE RESPONSE FOR CERTIFICATE OF CORRECTION

Paper No.: _____

DATE : September 30, 2010

TO SPE OF : ART UNIT 2872 - SPE Stephone B. Allen

SUBJECT : Request for Certificate of Correction for Appl. No.: 11/792,485 Patent No.: 7,589,923 B2

Please respond to this request for a certificate of correction within 7 days.

FOR IFW FILES:

Please review the requested changes/corrections as shown in the **COCIN** document(s) in the IFW application image. No new matter should be introduced, nor should the scope or meaning of the claims be changed.

Please complete the response (see below) and forward the completed response to scanning using document code **COCX**.

FOR PAPER FILES:

Please review the requested changes/corrections as shown in the attached certificate of correction. Please complete this form (see below) and forward it with the file to:

Certificates of Correction Branch (CofC)
Randolph Square Building
2800 South Randolph Street
Arlington, VA 22206

Should the reference JP 33-583 B1 02/1958 be added to Item (56), References Cited under Foreign Patent Documents? See COCIN dated 09-16-2010

Antonio Johnson

Certificates of Correction Branch
(571)272-0483

Thank You For Your Assistance

The request for issuing the above-identified correction(s) is hereby:
Note your decision on the appropriate box.

xApproved	**All** changes apply.
☐ **Approved in Part**	Specify below which changes **do not** apply.
☐ **Denied**	State the reasons for denial below.

Comments: Stephone B. Allen

Stephone B. Allen
Supervisory Patent Examiner
AU 2872

U.S. DEPARTMENT OF COMMERCE Patent and Trademark Office

UNITED STATES PATENT AND TRADEMARK OFFICE

Commissioner for Patents
United States Patent and Trademark Office
P.O. Box 1450
Alexandria, VA 22313-1450
www.uspto.gov

WESTMAN CHAMPLIN & KELLY, P.A.
SUITE 1400
900 SECOND AVENUE SOUTH
MINNEAPOLIS MN 55402

MAILED

JAN 30 2012

OFFICE OF PETITIONS

In re Patent No. 8,047,617 :
Issued: November 1, 2011 :
Application No. 11/792,545 : DECISION ON PETITION
Filed: March 7, 2008 :
Atty. Dkt. No. A101.12-0001 :

This is a decision on the petition, filed, December 22, 2011, which is being treated as a request under 37 CFR 3.81(b)[1] to correct the assignee's name and residence on the Letters Patent by way of a certificate of correction in the above-identified patent.

The request is GRANTED.

Telephone inquiries concerning this decision may be directed to the undersigned at (571) 272-3205. Inquiries regarding the issuance of a certificate of correction should be directed to the Certificate of Correction Branch at (571) 272-4200.

The Certificates of Correction Branch will be notified of this decision granting the petition under 37 CFR 3.81(b) and directing issuance of the requested Certificate of Correction.

/ALESIA M. BROWN/

Alesia M. Brown
Attorney Advisor
Office of Petitions

[1] See, MPEP 1309, subsection II; and Official Gazette of June 22, 2004.

UNITED STATES PATENT AND TRADEMARK OFFICE

Commissioner for Patents
United States Patent and Trademark Office
P.O. Box 1450
Alexandria, VA 22313-1450
www.uspto.gov

SHELL OIL COMPANY
P O BOX 2463
HOUSTON TX 77252-2463

MAILED
NOV 17 2010
OFFICE OF PETITIONS

In re Application of	:	
Baaijens et al.	:	
Application No. 11/792,574	:	DECISION ON PETITION
Filed: October 16, 2007	:	
Attorney Docket No. TS6425US	:	

This is a decision on the petition under the unintentional provisions of 37 CFR 1.137(b), filed October 21, 2010, to revive the above-identified application.

The petition is **GRANTED**.

This application became abandoned for failure to timely pay the issue and publication fees on or before September 28, 2010, as required by the Notice of Allowance and Fee(s) Due mailed June 28, 2010. Accordingly, the date of abandonment of this application is September 29, 2010. A Notice of Abandonment was mailed October 11, 2010.

The petition satisfies the requirements of 37 CFR 1.137(b) in that petitioner has supplied (1) the reply in the form of payment of the issue fee of $1,510.00 and the publication fee of $300.00, (2) the petition fee of $1,620.00; and (3) a proper statement of unintentional delay.

Telephone inquiries concerning this decision should be directed to the undersigned at (571) 272-7751.

This application is being referred to the Office of Data Management for processing into a patent.

Joan Olszewski
Petitions Examiner
Office of Petitions

UNITED STATES PATENT AND TRADEMARK OFFICE

Commissioner for Patents
United States Patent and Trademark Office
P.O. Box 1450
Alexandria, VA 22313-1450
www.uspto.gov

SCHWEGMAN, LUNDBERG & WOESSNER, P.A.
P.O. BOX 2938
MINNEAPOLIS, MN 55402

MAILED

FEB 28 2011

OFFICE OF PETITIONS

In re Application of	:	
Zhang et al.	:	DECISION ON PETITION
Application No. 11/792,608	:	TO WITHDRAW
Filed: February 16, 2010	:	FROM RECORD
Attorney Docket No. 23833-77377	:	

This is a decision on the Request to Withdraw as attorney or agent of record under 37 C.F.R. § 1.36(b), filed January 5, 2011.

The request is **DISMISSED** as involving a moot issue.

A review of the file record indicates that the power of attorney to the attorneys/agents associated with Customer Number 21186 was revoked by the assignee of the patent application on December 17, 2010. Accordingly, the request to withdraw under 37 C.F.R. § 1.36(b) is moot.

All future communications from the Office will be directed to the below-listed address until otherwise properly notified.

Telephone inquires concerning this decision should be directed to the undersigned at 571-272-3206. All other inquires concerning either the examination or status of the application should be directed to the Technology Center.

Liana Walsh
Petitions Examiner
Office of Petitions

cc: MORRIS MANNING MARTIN LLP
3343 PEACHTREE ROAD, NE
1600 ATLANTA FINANCIAL CENTER
ATLANTA GA 30326

UNITED STATES PATENT AND TRADEMARK OFFICE

Commissioner for Patents
United States Patent and Trademark Office
P.O. Box 1450
Alexandria, VA 22313-1450
www.uspto.gov

MAILED
JUN 28 2011
OFFICE OF PETITIONS

FISH & RICHARDSON PC
PO BOX 1022
MINNEAPOLIS MN 55440-1022

In re Patent No. 7,902,500	: DECISION ON
Juan Astorga-Wells	: REQUEST FOR RECONSIDERATION
Application No. 11/792,689	: of PATENT TERM ADJUSTMENT
Issue Date: March 8, 2011	:
Filed: June 6, 2007	:
Attorney Docket No. 25947-0042US1	:

This is a decision on the "APPLICATION FOR PATENT TERM ADJUSTMENT UNDER 37 C.F.R. §1.705(d)", filed May 9, 2011, requesting that the patent term adjustment indicated on the above-identified patent be corrected from five hundred ninety-six (596) days to seven hundred twenty-one (721) days.

The petition to correct the patent term adjustment indicated on the above-identified patent is **DISMISSED.**

On March 8, 2011, the instant application matured into U.S. Patent No. 7,902,500 with a patent term adjustment of five hundred ninety-six (596) days. The Office determined a patent term adjustment of 596 days based upon 545 days of Office delay pursuant to 37 CFR 1.703(a)(1) and 143 days of Office delay pursuant to 37 CFR 1.703(b), reduced by 92 days of Applicant delay under 37 CFR 1.704(b).

Patentees argue that even though they filed an RCE on October 28, 2010, they should be awarded 37 CFR 1.703(b) "over three year" delay from the time the Office mailed a Notice of Allowance on November 4, 2010 until the issue date of the patent. In other words, Patentees argue that no continued examination took place during this time period, and the Office should be accorded 125 additional days of delay pursuant to 37 CFR 1.703(b). Patentee's argument has been considered, but is not persuasive.

RELEVANT STATUTE AND REGULATIONS

The statutory basis for calculation of "B delay" is 35 U.S.C. 154(b)(1)(B) GUARANTEE OF NO MORE THAN 3-YEAR APPLICATION PENDENCY, which provides that:

Subject to the limitations under paragraph (2), if the issue of an original patent is delayed due to the failure of the United States Patent and Trademark Office to issue a patent within 3 years after the actual filing date of the application in the United States, not including —

> (i) any time consumed by continued examination of the application requested by the applicant under section 132(b);
>
> (ii) any time consumed by a proceeding under section 135(a), any time consumed by the imposition of an order under section 181, or any time consumed by appellate review by the Board of Patent Appeals and Interferences or by a Federal court; or
>
> (iii) any delay in the processing of the application by the United States Patent and Trademark Office requested by the applicant except as permitted by paragraph (3)(C), the term of the patent shall be extended 1 day for each day after the end of that 3-year period until the patent is issued.

The implementing regulation, 37 CFR 1.702(b) provides that:

Subject to the provisions of 35 U.S.C. 154(b) and this subpart, the term of an original patent shall be adjusted if the issuance of the patent was delayed due to the failure of the Office to issue a patent within three years after the date on which the application was filed under 35 U.S.C. 111(a) or the national stage commenced under 35 U.S.C. 371(b) or (f) in an international application, but not including:

> (1) Any time consumed by continued examination of the application under 35 U.S.C. 132(b);
> (2) Any time consumed by an interference proceeding under 35 U.S.C. 135(a);
> (3) Any time consumed by the imposition of a secrecy order under 35 U.S.C. 181;
> (4) Any time consumed by review by the Board of Patent Appeals and Interferences or a Federal court; or
> (5) Any delay in the processing of the application by the Office that was requested by the applicant.

OPINION

Patentee's arguments have been considered, but not found persuasive. The Office calculated the period of "B delay" pursuant to 35 U.S.C. 154(b)(1)(B)(i) and 37 CFR 1.702(b)(1) as 143 days based on the application having been filed under 35 U.S.C. 111(a) on June 6, 2007 and a request for continued examination under 132(b) having been filed on October 28, 2010. In other words, the 125 day period beginning on the date of mailing of the notice of allowance on November 4,

2010 to the date of issuance of the patent was considered time consumed by continued examination of an application under 35 U.S.C. 132(b) and was not included in the "B delay."

The Office's calculation of "B delay" is correct. The "B delay" is an adjustment entered if the issuance of the patent was delayed due to the failure of the Office to issue a patent within three years after the date on which the application was filed. However, the adjustment does not include, among other things, any time consumed by continued examination of the application at the request of the applicant under 35 U.S.C. 132(b)[1]. So, with respect to calculating the "B delay" where applicant has filed a request for continued examination, the period of adjustment is the number of days, if any, in the period beginning on the day after the date that is three years after the date on which the application was filed under 35 U.S.C. 111(a) or the national stage commenced under 35 U.S.C. 371(b) or (f) in an international application and ending on the date a patent was issued, but not including the number of days in the period beginning on the date on which a request for continued examination of the application under 35 U.S.C. 132(b) was filed and ending on the date the patent was issued.

Further, counting the period of time excluded from the "B delay" for the filing of a request for continued examination under 35 U.S.C. 132(b), from the date on which the request for continued examination is filed to the date the patent is issued is proper. Patentee does not dispute that time consumed by continued examination of an application under 35 U.S.C. 132(b) is properly excluded and that the calculation of the excluded period begins on the date of filing of the request for continued examination. At issue is what further processing or examination beyond the date of filing of the request for continued examination is not any time consumed by continued examination of the application under 35 U.S.C. 132(b). The USPTO indicated in September of 2000 in the final rule to implement the patent term adjustment provisions of the AIPA that once a request for continued examination under 35 U.S.C. 132(b) and 37 CFR 1.114 is filed in an application, any further processing or examination of the application, including granting of a patent, is by virtue of the continued examination given to the application under 35 U.S.C. 132(b) and CFR 1.114. See Changes to Implement Patent Term Adjustment under Twenty-Year Patent Term, 65 Fed. Reg. 56366, 56376 (Sept. 18, 2000) (response to comment 8). Thus, the excluded period begins with the filing of the request for continued examination and ends with the issuance of the patent.

Patentee's argument that the period of time after the issuance of a notice of allowance on a request for continued examination is not "any time consumed by continued examination

---

[1] Pursuant to 35 U.S.C. 132(b) , 37 CFR 1.114 provides for continued examination of an application, as follows:

(a) If prosecution in an application is closed, an applicant may request continued examination of the application by filing a submission and the fee set forth in § 1.17(e) prior to the earliest of:

(1) Payment of the issue fee, unless a petition under § 1.313 is granted;

(2) Abandonment of the application; or

(3) The filing of a notice of appeal to the U.S. Court of Appeals for the Federal Circuit under 35 U.S.C. 141, or the commencement of a civil action under 35 U.S.C. 145 or 146, unless the appeal or civil action is terminated.

(b) Prosecution in an application is closed as used in this section means that the application is under appeal, or that the last Office action is a final action (§ 1.113), a notice of allowance (§ 1.311), or an action that otherwise closes prosecution in the application.

requested by the applicant under section 132(b)" within the meaning of 35 U.S.C. 154(b)(1)(B)(i) is not availing. This limitation is not supported by the statutory language. Garcia v. United States, 469 U.S. 70, 75 (1984) ("only the most extraordinary showing of contrary intentions from [legislative history] would justify a limitation on the 'plain meaning' of the statutory language"). BP Am. Prod. Co. v. Burton, 549 U.S. 84, 91 (2006) ("Unless otherwise defined, statutory terms are generally interpreted in accordance with their ordinary meaning"). The statute provides for a guarantee of no more than 3-year application pendency, by providing for an adjustment in the patent term:

First, "Subject to the limitations of paragraph (2)," means that the limitations of paragraph 2 apply to this paragraph's adjustment of patent term. That is, the day-to-day extension of patent term for pendency beyond the 3 year period is restricted as follows: 1) "B delay" cannot accrue for days of "A delay" that overlap, 2) the patent term cannot be extended beyond disclaimed term, and 3) the period of adjustment, including accrued "B delay," will be reduced for applicant delay.

Second, "if the issue of an original patent is delayed due to the failure of the United States Patent and Trademark Office to issue a patent within 3 years after the actual filing date of the application in the United States," meaning that the condition must first occur that the issuance of an original patent (35 U.S.C. 153), not merely the issuance of a notice of allowance, is delayed due to the Office's failure to issue a patent (sign and record a patent grant in the name of the United States), not merely mail a notice of allowance, within 3 years after the actual filing date of the application in the United States. This provision gives the Office a three-year period to issue a patent (sign and record a patent grant in the name of the United States) after the application filing date before an adjustment will accrue for "B delay."

Third, "not including- (i) any time consumed by continued examination of the application requested by the applicant under section 132(b); (ii) any time consumed by a proceeding under section 135(a), any time consumed by the imposition of an order under section 181, or any time consumed by appellate review by the Board of Patent Appeals and Interferences or by a Federal court; or (iii) any delay in the processing of the application by the United States Patent and Trademark Office requested by the applicant except as permitted by paragraph (3)(C), meaning that the three-year period does not include "any time consumed by" or "any delay in processing," as specified in clauses (i)-(iii). This language correlates to 35 U.S.C. 154(b)(1)(A) which likewise provides the basis for determining the period given the Office to take the specified actions before an adjustment will accrue for "A delay" (e.g., extended for 1 day after the day after the period specified in clauses (i)-(iv)).

Furthermore, these clauses are interpreted using their ordinary meanings. Nonetheless, the context of the legislation should be considered. As stated in Wyeth v. Dudas, (580 F. Supp. 2d 138), because the clock for calculating the 20-year patent term begins to run on the filing date, and not on the day the patent is actually granted, some of the effective term of a patent is consumed by the time it takes to prosecute the application. To mitigate this effect, the statute, *inter alia*, grants adjustments of patent term whenever the patent prosecution takes more than three years, regardless of the reason. The time consumed by prosecution of the application includes every day the application is pending before the Office from the actual filing date of the

application in the United States until the date of issuance of the patent. The time it takes to prosecute the application ends not with the mailing of the notice of allowance, but with the issuance of the patent.

Thus, not including "any time consumed by" means not including any days used to prosecute the application as specified in clauses (i)-(ii)2. Clause (i) specifies "any time consumed by continued examination of the application requested by the applicant under section 132(b)." Clause (ii) specifies "any time consumed by a proceeding under section 135(a), any time consumed by the imposition of an order under section 181, or any time consumed by appellate review by the Board of Patent Appeals and Interferences or by a Federal court." "Time" in the context of this legislation throughout refers to days. "Consumed by" means used by or used in the course of. *Websters Collegiate Dictionary*, (11th ed.). The "any" signifies that the days consumed by are "any" of the days in the pendency of the application, and not just days that occur after the application has been pending for 3 years. As such, "any time consumed by" refers to any days used in the course of 1) continued examination of the application under section 132(b)(the filing of a request for continued examination), 2) interference proceedings, 3) secrecy orders, and 4) appellate review. Thus, that 3-year period given to the Office to issue a patent before an adjustment will accrue for "B delay" does not include any days used in the course of or any time consumed by clauses (i)-(ii), including any time consumed by the filing of a request for continued examination.

Fourth, "the term of the patent shall be extended 1 day for each day after the end of that 3-year period until the patent is issued" meaning that the consequence of this failure is that after "the end of that 3-year period" an additional 1 day of patent term will accrue for each day that the application is pending until the day the patent is issued.

The "time consumed by" or used in the course of the continued examination of the application requested by the applicant under section 132(b) does not end until issuance of the patent. 35 U.S.C. 132(b) was enacted under the same title, the "American Inventors Protection Act of 1999," as 35 U.S.C. 154(b). Section 4403 of the AIPA amended 35 U.S.C. § 132 to provide, at the request of the applicant, for continued examination of an application for a fee (request for continued examination or RCE practice), without requiring the applicant to file a continuing application under 37 CFR 1.53(b) or a continued prosecution application (CPA) under 37 CFR 1.53(d). Thus, clause (i) is different from clause (ii) in that clause (i) refers to an examination process whereas clause (ii) refers to time consumed by proceedings (interferences, secrecy orders and appeals) in an application.

By nature, the time used in the course of the examination process continues to issuance of the patent. The examination process involves examining the application to ascertain whether it appears that the applicant is entitled to a patent under the law. See 35 U.S.C. 131 ("[t]he

---

[2] Clause (iii) provides for not including (iii) any delay in the processing of the application by the United States Patent and Trademark Office requested by the applicant except as permitted by paragraph (3)(C), the term of the patent shall be extended 1 day for each day after the end of that 3-year period until the patent is issued. It is noted that paragraph (3)(C) allows with an adequate showing by applicant for reinstatement of no more than 3 months of the patent term reduced for applicant delay in taking in excess of three months to respond.

Director shall cause an examination to be made of the application and the alleged new invention; and if on such examination it appears that the applicant is entitled to a patent under the law, the Director shall issue a patent therefor"). If on examination it appears that the applicant is entitled to a patent, the USPTO issues a notice of allowance. See 35 U.S.C. 151 ("[i]f it appears that applicant is entitled to a patent under the law, a written notice of allowance of the application shall be given or mailed to the applicant"). If on examination it appears that the applicant is not entitled to a patent, the USPTO issues a notice (an Office action) stating the applicable rejection, objection, or other requirement, with the reasons therefor. See 35 U.S.C. 132 ("[w]henever, on examination, any claim for a patent is rejected, or any objection or requirement made, the Director shall notify the applicant thereof, stating the reasons for such rejection, or objection or requirement, together with such information and references as may be useful in judging of the propriety of continuing the prosecution of his application"). Neither the issuance of a notice of allowance nor the insurance of an Office action terminates the examination process. If after the issuance of an Office action under 35 U.S.C. 132 it subsequently appears that the applicant is entitled to a patent (e.g., in response to an argument or amendment by the applicant), the USPTO will issue a notice of allowance. Conversely, if after the issuance of a notice of allowance under 35 U.S.C. 151 it subsequently appears that the applicant is not entitled to a patent (e.g., in response to information provided by the applicant or uncovered by the USPTO), the USPTO will withdraw the application from issuance and issue an Office action under 35 U.S.C. 132 stating the applicable rejection, objection, or other requirement, with the reasons therefor.

As held in Blacklight Power, the USPTO's responsibility to issue a patent containing only patentable claims does not end with the issuance of a notice of allowance under 35 U.S.C. 151. See BlackLight Power, Inc. v. Rogan, 295 F.3d 1269, 1273 (Fed. Cir. 2002). Rather, if there is any substantial, reasonable ground within the knowledge or cognizance of the Director as to why an application should not issue, it is the USPTO's duty to refuse to issue the patent even if a notice of allowance has previously been issued for the application. See In re Drawbaugh, 9 App. D.C. 219, 240 (D.C. Cir 1896).

Moreover, the applicant continues to be engaged in the examination process after the mailing of the notice of allowance. 37 CFR 1.56 makes clear that the applicant has a duty to disclose information material to patentability as long as the application is pending before the USPTO (i.e., until a patent is granted or the application is abandoned). See 37 CFR 1.56(a) ("[t]he duty to disclose information exists with respect to each pending claim until the claim is cancelled or withdrawn from consideration, or the application becomes abandoned"). 37 CFR 1.97 and 1.98 provide for the consideration of information submitted by the applicant after a notice of allowance has been mailed. See 37 CFR 1.97(d). In addition, 37 CFR 1.312 provides for the amendment of an application after a notice of allowance has been mailed. In fact, the request for examination procedures3 permit the filing of a request for continued examination under 37 CFR 1.114 even after the issuance of a notice of allowance under 35 U.S.C. 151. See 37 CFR 1.114(a)(1).

As the examination process does not terminate with the mailing of the notice of allowance, the time consumed by continued examination requested by the applicant under section 132(b) does

---

[3] Thus, on occasion, even where a request for continued examination has already been filed and a notice of allowance issued pursuant to that request, applicant may file a further request for continued examination.

not terminate with the mailing of the notice of allowance. All the time the application is pending from the date of filing of the request for continued examination to the mailing of the notice of allowance through issuance of the patent is a consequence of the filing of the request for continued examination. Further action by the Office is pursuant to that request. Applicant has gotten further prosecution of the application without having to file a continuing application under 37 CFR 1.53(b).

All of the continued examination pursuant to the filing of the request by the applicant is properly excluded from the delay attributed to the Office. 35 U.S.C. 154(b)(1)(B)'s guarantee of a total application pendency of no more than three years provides for adjustment of the patent term for delay due to the Office's failure to issue the patent within three years, but does not include "any time consumed by continued examination requested by the applicant under 35 U.S.C. 132(b)." It is not necessary to mitigate the effect on the 20-year term to the extent that applicant has requested that the Office continue to examine the application via a request for continued examination, in lieu of, the filing of a continuing application under 37 CFR 1.53(b).

In this instance, a request for continued examination was filed on October 28, 2010, and the patent issued by virtue of that request on March 8, 2011. Pursuant to 35 U.S.C. 154(b)(1)(B)(i), the period beginning on October 28, 2010 and ending on March 8, 2011 is not included in calculating Office delay.

CONCLUSION

In view thereof, it is concluded that the patent term adjustment of 596 days indicated on the patent is correct.

Telephone inquiries specific to this matter should be directed to the undersigned at (571) 272-3207.

Cliff Congo
Petitions Attorney
Office of Petitions

UNITED STATES PATENT AND TRADEMARK OFFICE

UNITED STATES DEPARTMENT OF COMMERCE
United States Patent and Trademark Office
Address: COMMISSIONER FOR PATENTS
P.O. Box 1450
Alexandria, Virginia 22313-1450
www.uspto.gov

APPLICATION NO.	FILING DATE	FIRST NAMED INVENTOR	ATTORNEY DOCKET NO.	CONFIRMATION NO.
11/792,702	06/08/2007	Rakesh Ratnam	28410U	4651

7590 08/10/2010
THE NATH LAW GROUP
112 South West Street
Alexandria, VA 22314

EXAMINER
GOON, SCARLETT Y

ART UNIT	PAPER NUMBER
1623	

MAIL DATE	DELIVERY MODE
08/10/2010	PAPER

DECISION DISMISSING PETITION UNDER 37 CFR 1.138(d)

The declaration of express abandonment will not be recognized

This is in response to the petition under 37 CFR 1.138(d), requesting for a refund of any previously paid search fee and excess claims fee in the above-identified application.

The petition is dismissed.

The express abandonment will **not** be recognized for the reason(s) indicated below:

1. ☑ The petition was not filed in sufficient time to permit the appropriate officials to recognize the abandonment before an examination has been made of the application. See 37 CFR 1.138(d).
2. ☐ The petition was not signed by a party authorized by 37 CFR 1.33(b)(1), (3) or (4).
3. ☑ The application is not an application filed under 35 U.S.C. 111(a) on or after December 8, 2004.
4. ☐ The petition for express abandonment under 1.138(d) is dismissed because the applicant did not pay any search fee and excess claims fees in the above-identified application.

Telephone inquiries should be directed to the Office of Data Management at (571) 272-4200.

Mimi Farmer

Patent Publication Branch
Office of Data Management

FORM PET651D (Rev. 08/07)

UNITED STATES PATENT AND TRADEMARK OFFICE

Commissioner for Patents
United States Patent and Trademark Office
P.O. Box 1450
Alexandria, VA 22313-1450
www.uspto.gov

FLASTER/GREENBERG P.C.
FOUR PENN CENTER
1600 JOHN F. KENNEDY BOULEVARD
2ND FLOOR
PHILADELPHIA, PA 19103

MAILED

OCT 21 2010

OFFICE OF PETITIONS

In re Application of	:	
Andreussi et al.	:	
Application No. 11/792,726	:	DECISION ON PETITION
Filed: June 6, 2007	:	
Attorney Docket No. G0830-2US (T3-1409)	:	

This is a decision on the petition, filed August 16, 2010, which is being treated as a petition under 37 CFR 1.181 (no fee) requesting withdrawal of the holding of abandonment in the above-identified application.

The petition is **GRANTED**.

This application was held abandoned for failure to timely respond to the Final Office action mailed December 1, 2009, which set a three (3) month shortened statutory period for reply. Accordingly, a reply was due on or before June 1, 2010, with a three (3) month extension of time.

Petitioner asserts that a timely reply was filed on June 1, 2010, which included the following papers: a three (3) month extension of time, a Request for Continued Examination including the fee and the submission required by 37 CFR 1.114.

A review of the file record does in fact indicate that a three (3) month extension of time, a RCE including the fee and the submission required by 37 CFR 1.114, was received by the Office on June 1, 2010.

In view of the above, the holding of abandonment for failure to timely file a reply to the Office action of December 1, 2009, is hereby withdrawn and the application restored to pending status.

This application is being referred to Technology Center AU 3762 for appropriate action in the normal course of business on the reply filed April 27, 2010.

Telephone inquiries concerning this decision should be directed to Alicia Kelley at (571) 272-6059.

/Carl Friedman/
Carl Friedman
Petitions Examiner
Office of Petitions

UNITED STATES PATENT AND TRADEMARK OFFICE

Commissioner for Patents
United States Patent and Trademark Office
P.O. Box 1450
Alexandria, VA 22313-1450
www.uspto.gov

MCCARTER & ENGLISH, LLP
BOSTON
265 Franklin Street
Boston MA 02110

MAILED
MAR 21 2012
OFFICE OF PETITIONS

In re Application of	:	
Boermann et al.	:	
Application No. 11/792,735	:	ON APPLICATION FOR
Filed: July 30, 2007	:	PATENT TERM ADJUSTMENT
Atty Docket No. 098111-0102	:	

This is in response to the APPLICATION FOR PATENT TERM ADJUSTMENT INCLUDING REQUEST FOR RECONSIDERATION UNDER 37 C.F.R. §1.705(B) filed February 24, 2012. Applicants submit that the initial determination of patent term adjustment of 16 days is incorrect as the requirements of 371 were fulfilled on July 30, 2007. As such, the 14 month delay is 197 days (and the initial determination of PTA is 103 days). Applicant submits that the correct patent term adjustment to be indicated on the patent is at least three hundred twenty-four (324) days. Applicant requests correction of the PTA indicated on the patent on the basis that the Office will take in excess of three years to issue this patent.

To the extent that the instant application for patent term adjustment requests correction of the initial determination of patent term adjustment at the time of the notice of allowance, the application for patent term adjustment is **granted**. The Office has updated the PALM screen to reflect that the correct Patent Term Adjustment (PTA) determination at the time of the mailing of the Notice of Allowance is **one hundred three (103)** days. A copy of the updated PALM screen, showing the correct determination, is enclosed.

On November 25, 2011, the Office mailed the Determination of Patent Term Adjustment under 35 U.S.C. 154(b) in the above-identified application. The Notice stated that the patent term adjustment to date is 16 days. The instant application for

patent term adjustment was timely filed[1] on or before payment of the issue fee. Applicant disputes the initial determination of patent term adjustment on the basis that the requirements of 371 were fulfilled on July 30, 2007 and not October 26, 2007, the date used in calculating the 14 month delay to mailing of the first Office action on April 15, 2009. Applicant argues that the period for this delay is calculated as 197 days, not 110 days.

Applicants are correct that this application fulfilled the requirements of 371 on July 30, 2007. Pursuant to action on the instant application for patent term adjustment, applicants request for correction of the notice of acceptance filed June 9, 2008 and resubmitted February 5, 2009 was referred for action. Upon action, a corrected filing receipt and a corrected notice of acceptance were issued on March 19, 2012 correcting the date of fulfillment of the requirements of 371 to July 30, 2007.

As such, the 14 month delay to mailing of the first Office action is corrected from 110 days to 197 days. This period beginning on the day after the date fourteen months after the fulfillment of the requirements of 371, October 1, 2008 and ending on the date of mailing of the first Office action, April 15, 2009.

In view thereof, the patent term adjustment at the time of the mailing of the notice of allowance is 103 days.

Submission of the $200.00 fee set forth in 37 CFR 1.18(e) is acknowledged. No additional fee is required.

To the extent that the instant application for patent term adjustment requests reconsideration of the patent term adjustment as it relates to the Office's failure to issue the patent within 3 years of the filing date, the application for patent term adjustment under 37 CFR 1.705(b) is **DISMISSED as PREMATURE**.

Knowledge of the actual date the patent issues is required to calculate the amount, if any, of additional patent term patentee is entitled to for Office failure to issue the patent within 3 years. See § 1.702(b). (This is true even where a request for continued examination (RCE) was filed). The computer will not

[1] The issue fee was also received on February 24, 2012.

undertake the § 1.702(b) calculation until the actual date of issuance of the patent has been determined. Likewise, the computer will not calculate any further Office delay under § 1.702(a)(4) or applicant delay under § 1.704(c)(10) until the actual date of issuance of the patent has been determined. As such, the Office cannot make a determination on the correctness of the patent term adjustment until the patent has issued.

Requesting reconsideration of the patent term adjustment to be indicated on the patent under 37 CFR 1.705(b) based on the initial determination of patent term adjustment and a projected issuance date of the patent (or even the filing date of the request for continued examination) is premature. Accordingly, it is appropriate to dismiss as premature such a request.

Rather than file an application for patent term adjustment under 37 CFR 1.705(b) contesting the 37 CFR 1.702(b) calculation at the time of the mailing of the notice of allowance, applicant is advised that they may wait until the time of the issuance of the patent and file a request for reconsideration of the patent term adjustment pursuant to 37 CFR 1.705(d). As the USPTO does not calculate the amount of time earned pursuant to 37 CFR 1.702(b) until the time of the issuance of the patent, the Office will consider any request for reconsideration of the patent term adjustment due to an error in the calculation of 37 CFR 1.702(b) to be timely if the request for reconsideration is filed within two months of the issuance of the patent. However, as to all other bases for contesting the initial determination of patent term adjustment received with the notice of allowance, applicant must timely file an application for patent term adjustment prior to the payment of the issue fee[2].

Any request for reconsideration of the patent term adjustment indicated on the patent must be timely filed within 2 months

---

[2] For example, if applicant disputes both the calculation of patent term adjustment under 37 CFR 1.702(a)(1) for Office failure to mail a first Office action or notice of allowance not later than fourteen months after the date on which the application was filed and under 37 CFR 1.702(b) for Office failure to issue a patent within three years of the actual filing date of the application, then applicant must still timely file an application for patent term adjustment prior to the payment of the issue fee to contest the calculation of Office delay in issuing a first Office action or notice of allowance. See 37 CFR 1.705(b) and 35 U.S.C. 154(b)(3)(B). A dispute as to the calculation of the §1.702(a)(1) period raised on request for reconsideration of patent term adjustment under 37 CFR 1.705(d) will be dismissed as untimely filed.

after issuance pursuant to 37 CFR 1.705(d) and must include payment of the required fee under 37 CFR 1.18(e).

The application is being forwarded to the Office of Data Management for issuance of a patent. The patent term adjustment indicated on the patent (as shown on the Issue Notification mailed about three weeks prior to patent issuance) will include any additional adjustment accrued both for Office delay in issuing the patent more than four months after payment of the issue fee and satisfaction of all outstanding requirements, and for the Office taking in excess of three years to issue the patent.

Telephone inquiries specific to this decision should be directed to the undersigned at (571) 272-3219.

Nancy Johnson
Senior Petitions Attorney
Office of Petitions

Patent Term Adjustments

PTA/PTE Information | Patent Term Adjustment | Patent Term Extension

Application Number*: 11792735 Search | Explanation of PTA Calculation | Explanation of PTE Calculation

PTA Calculations for Application: 11792735

Application Filing Date 07/30/2007	OverLapping Days Between (A and B) or (A and C) 0
Issue Date of Patent	Non-Overlapping USPTO Delays: 250
A Delays 250	PTO Manual Adjustment 87
B Delays 0	Applicant Delay (APPL) 234
C Delays 0	Total PTA (days) 103

* - Sorted Column

File Contents History

Action Number	Action Recorded Date	Action Due Date	Action Code	Action Description	Duration PTO	Duration APPL	Parent Action Number
101	03/19/2012		P028	Adjustment of PTA Calculation by PTO	197		0
100	03/19/2012		P028	Adjustment of PTA Calculation by PTO		196	0
99	03/19/2012		P028	Adjustment of PTA Calculation by PTO		196	0
98	03/19/2012		P028	Adjustment of PTA Calculation by PTO	196		0
97	03/19/2012		P028	Adjustment of PTA Calculation by PTO	196		0
96	03/19/2012		P028	Adjustment of PTA Calculation by PTO		110	0
81	11/25/2011	07/08/2011	MN/=.	Mail Notice of Allowance	140		54
80	11/22/2011		OAR	Office Action Review			0
79	11/22/2011		OAR	Office Action Review			0
78	11/22/2011		OAR	Office Action Review			0
77	11/22/2011		OAR	Office Action Review			0
76	11/22/2011		IREV	Issue Revision Completed			0
75	11/22/2011		DVER	Document Verification			0
74	11/22/2011		N/=.	Notice of Allowance Data Verification Completed			0
73	11/22/2011		DOCK	Case Docketed to Examiner in GAU			0
70	11/19/2011		EX.R	Reasons for Allowance			0
69	11/19/2011		EX.A	Examiner's Amendment Communication			0
68	11/19/2011		CNTA	Allowability Notice			0
71	11/08/2011		EXIE	Interview Summary - Examiner Initiated			0
66	05/18/2011		LET.	Miscellaneous Incoming Letter			0
65	05/04/2011		MEXIN	Mail Examiner Interview Summary (PTOL - 413)			0
63	04/29/2011		PA..	Change in Power of Attorney (May Include Associate POA)			0
64	04/28/2011		EXIN	Examiner Interview Summary Record (PTOL - 413)			0
62	04/27/2011		C.AD	Correspondence Address Change			0
61	03/28/2011		FLRCPT.C	Filing Receipt - Corrected			0

UNITED STATES PATENT AND TRADEMARK OFFICE

Commissioner for Patents
United States Patent and Trademark Office
P.O. Box 1450
Alexandria, VA 22313-1450
www.uspto.gov

VIDAS, ARRETT & STEINKRAUS, P.A.
SUITE 400, 6640 SHADY OAK ROAD
EDEN PRAIRIE MN 55344

MAILED

JUN 14 2011

OFFICE OF PETITIONS

In re Application of	:	
Lutz Schilling, et al.	:	
Application No. 11/792,786	:	DECISION ON PETITION
Filed: October 9, 2007	:	
Attorney Docket No. H01.2-13643-US01	:	

This is a decision on: **(a)** the petition, filed May 2, 2011, which is being treated as a petition under 37 CFR 1.181 (no fee) requesting withdrawal of the holding of abandonment, and in the alternative, **(b)** a petition to revive the above-identified under the unintentional provision of 37 CFR 1.137(b).

The petition under 37 CFR 1.181 is **DISMISSED**.

Any request for reconsideration of this decision should be filed within two (2) months from the mail date of this decision. *Note* 37 CFR 1.181(f). The request for reconsideration should include a cover letter and be entitled as a "Renewed Petition under 37 CFR 1.181 to Withdraw the Holding of Abandonment."

This application was held abandoned for failure to reply to the Final Office action mailed February 5, 2010, which set a three (3) month shortened statutory period for reply. A reply was due on or before May 5, 2010 or on or before June 5, 2010 with a filing of a one (1) month extension of time. A Notice of Abandonment was mailed on December 21, 2010.

Petitioner asserts that "due to improper docketing indicating that a response had been completed and filed, Applicant's unintentionally failed to respond to the Final Office action and the application went abandoned."

A response to the Final office action of February 5, 2010 was timely received on June 1, 2010 along with a one (1) month extension of time. However, the response did not place the application in condition for allowance according to the advisory action that was mailed June 22, 2010. As no proper response to the final Office action of February 5, 2010 was timely filed, the application became abandoned on June 6, 2010.

As the application was properly held to have gone abandoned, the petition to withdraw the holding of abandonment cannot be granted.

The petition under 37 CFR 1.137(b) is **GRANTED.**

The petition satisfies the requirements of 37 CFR 1.137(b) in that petitioner has supplied (1) the reply in the form of a Request for Continued Examination (RCE) and fee of $405, and the submission required by 37 CFR 1.114; (2) the petition fee of $810; and (3) a proper statement of unintentional delay.

37 CFR 1.137(b)(3) requires a statement that "the entire delay in filing the required reply from the due date for the reply until the filing of a grantable petition pursuant to 37 CFR 1.137(b) was unintentional." Since the statement appearing in the petition varies from the language required by 37 CFR 1.137(b)(3), the statement is being construed as the required statement. Petitioner must notify the Office if this is not a correct reading of the statement appearing in the petition.

Telephone inquiries concerning this decision should be directed to the Terri Johnson at (571) 272-2991.

This application is being referred to Technology Center AU 1729 for processing of the RCE and for appropriate action by the Examiner in the normal course of business on the amendment submitted in accordance with 37 CFR 1.114.

/Ramesh Krishnamurthy/
Ramesh Krishnamurthy
Petitions Examiner
Office of Petitions

UNITED STATES PATENT AND TRADEMARK OFFICE

Commissioner for Patents
United States Patent and Trademark Office
P.O. Box 1450
Alexandria, VA 22313-1450
www.uspto.gov

MAILED
OCT 18 2011
OFFICE OF PETITIONS

VIDAS, ARRETT & STEINKRAUS, P.A.
SUITE 400, 6640 SHADY OAK ROAD
EDEN PRAIRIE MN 55344

In re Application:	:	
Schilling et al.	:	
Application No. 11/792,786	:	ON PETITION
Filed: October 9, 2007	:	
Attorney Docket No. H01.2-13643-US01	:	

This is a notice regarding your request for acceptance of a fee deficiency submission under 37 CFR 1.28 filed September 23, 2011.

On September 1, 1998, the Court of Appeals for the Federal Circuit held that 37 CFR 1.28(c) is the sole provision governing the time for correction of the erroneous payment of the issue fee as a small entity. **See DH Technology v. Synergystex International, Inc. 154 F.3d 1333, 47 USPQ2d 1865 (Fed. Cir. Sept. 1, 1998).**

The Office no longer investigates or rejects original or reissue applications under 37 CFR 1.56. **1098 Off. Gaz. Pat. Office 502 (January 3, 1989)**. Therefore, nothing in this Notice is intended to imply that an investigation was done.

Your fee deficiency submission under 37 CFR 1.28 is hereby **ACCEPTED**.

This application is no longer entitled to small entity status. Accordingly, all future fees paid in this application must be paid at the large entity rate.

However, an itemization of the total deficiency payment is required by 37 CFR 1.28(c)(2)(ii). The itemization must include the following information:

(A) Each particular type of fee that was erroneously paid as a small entity, (e.g., basic statutory filing fee, two-month extension of time fee) along with the current fee amount for a non-small entity;
(B) The small entity fee actually paid, and when. This will permit the Office to differentiate, for example, between two one-month extension of time fees erroneously paid as a small entity but on different dates;
(C) The deficiency owed amount (for each fee erroneously paid); and
(D) The total deficiency payment owed, which is the sum or total of the individual deficiency owed amounts set forth in paragraph (c)(2)(ii)(C) of this section.

If the requirements of 37 CFR 1.28(c)(2) are not complied with (i.e. not itemizing the total deficiency ,etc.), such failure will either: be treated as an authorization for the Office to process the deficiency payment and charge the processing fee set forth in § 1.17(i), or result in a requirement for compliance within a one-month non-extendable time period under § 1.136(a) to avoid the return of the fee deficiency paper, at the option of the Office.

Petitioner has not provided a proper itemization of the total deficiency payment of $2,145.00 and therefore petitioner's deposit account has been charged the $130.00 processing fee as set forth in 37 CFR 1.17(i). More specifically, petitioner has failed to provide a proper itemization of the application as filed fees. Petitioner has instead submitted a total amount of $590.00.

Telephone inquiries concerning this decision should be directed to the undersigned at (571) 272-7751.

/Joan Olszewski/
Joan Olszewski
Petitions Examiner
Office of Petitions

UNITED STATES PATENT AND TRADEMARK OFFICE

Commissioner for Patents
United States Patent and Trademark Office
P.O. Box 1450
Alexandria, VA 22313-1450
www.uspto.gov

NIXON & VANDERHYE, PC
901 NORTH GLEBE ROAD, 11TH FLOOR
ARLINGTON VA 22203

MAILED
MAR 22 2011
OFFICE OF PETITIONS

In re Application of Routledge et al. Application No. 11/792,850 Filed: August 22, 2008 Attorney Docket No. BJS-4687-7	: : : : :	DECISION ON PETITION TO WITHDRAW FROM RECORD

This is a decision on the Request to Withdraw as attorney or agent of record under 37 C.F.R. § 1.36(b), filed February 13, 2011.

The request is **NOT APPROVED**.

A grantable request to withdraw as attorney/agent of record must be signed by every attorney/agent seeking to withdraw or contain a clear indication that one attorney is signing on behalf of another/others.

The request was signed by B.J. Sadoff on behalf of all attorneys of record, but does not include a Customer Number. Accordingly, since the practitioners were appointed by a Customer Number, the Request must reflect withdrawal of practitioners associated with the same Customer Number.

All future communications from the Office will continue to be directed to the above-listed address until otherwise notified by applicant.

Currently, there is an outstanding Office action mailed November 30, 2010 that requires a reply.

Telephone inquires concerning this decision should be directed to the undersigned at (571) 272-7751. All other inquires concerning either the examination or status of the application should be directed to the Technology Center.

Joan Olszewski
Petitions Examiner
Office of Petitions

UNITED STATES PATENT AND TRADEMARK OFFICE

UNITED STATES DEPARTMENT OF COMMERCE
United States Patent and Trademark Office
Address: COMMISSIONER FOR PATENTS
P.O. Box 1450
Alexandria, Virginia 22313-1450
www.uspto.gov

APPLICATION NO.	FILING DATE	FIRST NAMED INVENTOR	ATTORNEY DOCKET NO.	CONFIRMATION NO.
11/792,864	04/25/2008	Tomoyasu Miyashita	1982-0441PUS1	5893

2292 7590 03/27/2012
BIRCH STEWART KOLASCH & BIRCH
PO BOX 747
FALLS CHURCH, VA 22040-0747

EXAMINER
ZERVIGON, RUDY

ART UNIT	PAPER NUMBER
1716	

NOTIFICATION DATE	DELIVERY MODE
03/27/2012	ELECTRONIC

Please find below and/or attached an Office communication concerning this application or proceeding.

The time period for reply, if any, is set in the attached communication.

Notice of the Office communication was sent electronically on above-indicated "Notification Date" to the following e-mail address(es):

mailroom@bskb.com

UNITED STATES PATENT AND TRADEMARK OFFICE

Mailed:

MAR 27 2012

In re application of
Miyashita et al.
Serial No. 11/792,864
Filed: 04/07/2008
For: **SUBSTRATE PROCESSING APPARATUS**

DECISION ON PETITION

This is a decision on a PETITION filed May 25, 2010, which has been accepted as a timely petition under 1.59(b) and MPEP 724.02 and is before the Group Director of Technology Center 1700 for consideration.

DECISION

Petitioner requests that the documents filed on April 20, 2010 be expunged. The petition is **GRANTED.**

Section 1.59 has been amended to eliminate references to returning documents that have been expunged to recognize that, with electronic Official files, there will be nothing to return when a paper is expunged.

The Office is capturing electronic images of all documents that form the Official file. Where the image is generated from a physical source document, the originating document may be disposed of once the electronic image accuracy is verified. The paper source document will eventually be destroyed under a United States National Archives and Records Administration (NARA) approved schedule. Therefore, if a document is to be expunged from the record, the only operation that will be required will be removal of the image from the Official file.

Paragraph (a)(1) of §1.59 has been amended by deleting the phrase "and returned " from the first sentence, and deleting the second sentence. Paragraph (b) of §1.59 has been amended by deleting the phrase "and return " from each of the first and second sentences. The Office will

continue to provide notice in the Official file that a paper has been expunged and the Office will send a decision to the applicant notifying the applicant that the paper has been expunged.

The images will be removed from the Official file.

Karen M. Young

Karen M. Young, Director
Technology Center 1700
Chemical and Materials Engineering

wk

Michael K. Mutter
BIRCH STEWART KOLASCH & BIRCH
PO BOX 747
FALLS CHURCH VA 22040-0747

UNITED STATES PATENT AND TRADEMARK OFFICE

Commissioner for Patents
United States Patent and Trademark Office
P.O. Box 1450
Alexandria, VA 22313-1450
www.uspto.gov

CHOATE HALL & STEWART LLP
TWO INTERNATIONAL PLACE
BOSTON MA 02110

MAILED

AUG 09 2011

OFFICE OF PETITIONS

In re Application of	:	
Sooknanan, et al.	:	
Application No. 11/792,932	:	
Filed: February 25, 2008	:	
Patent No. 7,947,436	:	ON REQUEST FOR
Issued: May 24, 2011	:	RECONSIDERATION OF
Attorney Docket Number: 2009074-0011	:	PATENT TERM ADJUSTMENT

This is a decision on the petition under 37 CFR 1.705(d), filed July 25, 2011. Patentees request that the determination of patent term adjustment be corrected from one hundred eighty-seven (187) days to three hundred seventy (370) days.

As the instant application for patent term adjustment requests reconsideration of the patent term adjustment is **DISMISSED**.

On May 24, 2011, the instant application matured into U.S. Patent No. 7,947,436 with a patent term adjustment of 187 days. The Office determined a patent term adjustment of 187 days based upon 68 days of Office delay pursuant to 37 CFR 1.703(a)(1) and 162 days pursuant to 37 CFR 1.703(b), reduced by 43 days of Applicant delay.

Patentees argues that the Office should have been assessed 345 days of delay pursuant to 37 CFR 1.703(b), not the 162 days presently accorded. Patentees' argument has been considered, but is not persuasive.

37 CFR 1.703(b)(1) sets forth, *in toto*:

(b) The period of adjustment under § 1.702(b) is the number of days, if any, in the period beginning on the day after the date that is three years after the date on which the application was filed under 35 U.S.C. 111(a) or the national stage commenced under 35 U.S.C. 371(b) or (f) in an international application and ending on the date a patent was issued, but not including the sum of the following periods:

(1) The number of days, if any, in the period beginning on the date on which a request for continued examination of the application under 35 U.S.C. 132(b) was filed and ending on the date the patent was issued;

It follows that the proper manner of calculating the RCE-cutoff is to terminate the over three year period on the day before the RCE was filed, since 37 CFR 1.703(b)(1) expressly states that the day on which the RCE was filed is not included in the over three year period. Commencement began on June 13, 2007 (i.e. 30 months from the priority date of December 13, 2004). Accordingly, the over three year period began on June 14, 2010 and ended on November 22, 2010 (the day before the RCE was filed), and is 162 days. See 35 U.S.C. 154(b)(1)(B)(i).

Accordingly, at issuance, the Office properly entered 162 additional days of patent term adjustment for the Office taking in excess of three years to issue the patent.

In view thereof, the correct number of days of patent term adjustment is **one hundred eighty-seven (187) days.**

Receipt of the $200 fee for filing the instant application for patent term adjustment is acknowledged.

Telephone inquiries specific to this decision should be directed to the undersigned at (571)272-3207.

Cliff Congo
Petitions Attorney
Office of Petitions

UNITED STATES PATENT AND TRADEMARK OFFICE

UNITED STATES DEPARTMENT OF COMMERCE
United States Patent and Trademark Office
Address: COMMISSIONER FOR PATENTS
P.O. Box 1450
Alexandria, Virginia 22313-1450
www.uspto.gov

APPLICATION NO.	FILING DATE	FIRST NAMED INVENTOR	ATTORNEY DOCKET NO.	CONFIRMATION NO.
11/792,989	10/05/2007	David Wayne Arnett	ELO-00009 (ELOPAK-619)	6438

30853 7590 08/20/2010
WARN, HOFFMANN, MILLER & LALONE, .P.C
PO BOX 70098
ROCHESTER HILLS, MI 48307

EXAMINER
SINGH, KAVEL

ART UNIT	PAPER NUMBER
3651	

MAIL DATE	DELIVERY MODE
08/20/2010	PAPER

Please find below and/or attached an Office communication concerning this application or proceeding.

The time period for reply, if any, is set in the attached communication.

UNITED STATES PATENT AND TRADEMARK OFFICE

Commissioner for Patents
United States Patent and Trademark Office
P.O. Box 1450
Alexandria, VA 22313-1450
www.uspto.gov

AUG 20 2010

Warn, Hoffman, Miller & Lalone, P.C.
P.O. Box 70098
Rochester Hills, MI 48307

In re application of David Wayne Arnett et al. Application No. 11/792,989 Filed: October 5, 2007 For: APPARATUS AND METHOD FOR LOADING CARTONS ON CARTON FORMING MACHINES	:	DECISION ON PETITION TO RESET A PERIOD FOR REPLY (DEFECTIVE OFFICE ACTION)

This is in reply to the Petition to Reset a Period for Reply Due to a defect in an Office action, received in the Patent and Trademark Office on July 19, 2010. There is no fee required for this petition.

The petition is **GRANTED**.

In accordance with MPEP 710.06, the Office will grant a petition to reset the period for reply to run from the date the error is corrected, when an Office action contains some defect and the error is called to the attention of the Office within one month of the mail date of the action. If the error is brought to the attention of the Office greater than one month after the date of the Office action but before the expiration of the reply period, the Office will set a new period for reply, if requested to do so by the applicant, to substantially equal the time remaining in the reply period. Any such reset period being at least one month. If any such error is not brought to the attention of the Office prior to the expiration of the response period, the period will not be restarted and any response would require the appropriate extension fee to be considered timely.

A review of the file record reveals that a non-final Office action was mailed to the address of record on April 19, 2010. Applicant's petition indicates that on page 9 of the action, fifth paragraph, a rejection under 35 USC 103 refers to a Byrne reference, and also that reference numerals are listed that don't seem to be present in the Mizuma reference. Because there is no such Byrne reference of record in this case, and because certain reference numerals listed in the rejection did not appear to be present in the Mizuma reference, it is agreed that there is an error which affects applicant's ability to reply to the Office action. Applicant's petition was filed on the 3 month date of the mailing date of the Office action and therefore the petition is **GRANTED**.

The application is being forwarded to the Supervisory Legal Instruments Examiner to reset the period for reply to the non-final Office action to run **ONE MONTH** from the date of this decision. A copy of the corrected portions of the April 19, 2010 Office action addressing the above-noted errors is attached to this decision.

Telephone inquiries relative to this decision should be directed to Special Programs Examiner Steven Meyers at (703) 308-3868.

Kathy Matecki

Kathy Matecki, Director
Patent Technology Center 3600
(571) 272-5250

SM/SM; 8/3/10

SM

Attachment: Corrected copy of the Office action originally mailed April 19, 2010

DETAILED ACTION

Election/Restrictions

Claims 59 and 60 are withdrawn from further consideration pursuant to 37 CFR 1.142(b) as being drawn to a nonelected invention, there being no allowable generic or linking claim. Election was made **without** traverse in the reply filed on 1/19/10.

Claim Rejections - 35 USC § 112

The following is a quotation of the first paragraph of 35 U.S.C. 112:

> The specification shall contain a written description of the invention, and of the manner and process of making and using it, in such full, clear, concise, and exact terms as to enable any person skilled in the art to which it pertains, or with which it is most nearly connected, to make and use the same and shall set forth the best mode contemplated by the inventor of carrying out his invention.

Claims 32,42,45, and 43 are rejected under 35 U.S.C. 112, first paragraph, as failing to comply with the written description requirement. The claim(s) contains subject matter which was not described in the specification in such a way as to reasonably convey to one skilled in the relevant art that the inventor(s), at the time the application was filed, had possession of the claimed invention.

Regarding claim 32, the specification does not teach a delivering device.

Claims 42 and 53, the specification does not teach a container forming machine.

Claim 44, the specification does not teach a controller to emit a pulse chain to command the operation of said loading servo motor.

The following is a quotation of the second paragraph of 35 U.S.C. 112:

> The specification shall conclude with one or more claims particularly pointing out and distinctly claiming the subject matter which the applicant regards as his invention.

Claim 32 recites the limitation "said delivery device" in line 1and "said conveyor" (referring to the delivery device) in line 2. There is insufficient antecedent basis for this limitation in the claim.

Claim 35 recites the limitation "said conveyor" in lines 2 and 4 (referring to the loading device?). There is insufficient antecedent basis for this limitation in the claim.

Claim Rejections - 35 USC § 102

The following is a quotation of the appropriate paragraphs of 35 U.S.C. 102 that form the basis for the rejections under this section made in this Office action:

> A person shall be entitled to a patent unless –
>
> (b) the invention was patented or described in a printed publication in this or a foreign country or in public use or on sale in this country, more than one year prior to the date of application for patent in the United States.

Claims 31-35, 47, and 48 are rejected under 35 U.S.C. 102(b) as being anticipated by Babunovic U.S. Patent No. 3,517,794.

Claim 31, Babunovic teaches a loading device 10 including a loader 16 for forwarding an article (C), a receiving device 60 including a receiver 61 for receiving said article (C) delivered thereto by said loader 16, an advancing device 15 arranged to advance said loader 16 on an endless path C2 L68 C4 L28-31, a driving device (M) drivingly connected to said receiving device 60 for advancing said receiver 61 along a second path extending into the region of a portion of said endless path (C3 L43-45) at which said loader 16 delivers said article (C) to said receiver 61, said advancing device 15 being arranged to reverse said loader 16 momentarily out of said region immediately following delivery of said article (C) to said receiver 61 C2 L52-56.

Claim 32, Babunovic teaches said delivering device 11 is an endless conveyor C2 69-72, said loader 16 is a pusher (onto) of said conveyor 11, and said receiving device 61 comprises a series of mandrels 61 one of which is said receiver 61, said article (C) being a partially formed packaging carton receivable over said receiver 61.

A recitation with respect to the manner in which an apparatus is intended to be employed does not impose any structural limitation upon the claimed apparatus which differentiates it from a prior art reference disclosing the structural limitations of the claim. In re Pearson, 494 F.2d 1399, 181 USPQ 641 (CCPA 1974); In re Yanush, 477 F.2d 958, 177 USPQ 705 (CCPA 1973); In re Finsterwalder, 436 F.2d 1028, 168 USPQ 530 (CCPA 1971); In re Casey, 370 F.2d 576, 152 USPQ 235 (CCPA 1967); In re Otto, 312 F.2d 937, 136 USPQ 458 (CCPA 1963); Ex parte Masham, 2 USPQ2d 1647 (BdPatApp & Inter 1987).

Claim 33, Babunovic teaches said receiving device 60 is a rotatable turret which has said mandrels 61 distribute therearound and which indexes said article (C) through circumferentially spaced work stations Fig. 1 C3 L50-55, said pusher 16 serving to propel said article (C) along a load path and to load said article (C) onto said receiver 61 once the latter has been indexed into a position axially aligned with said load path C4 L45-50, and said loading device 10 including a loader guide 23 arranged to maintain said article (C) in axial alignment with said receiver 61 during loading of said article (C) onto said receiver 61 C2 L44-48 C3 L70-75.

Claim 34, Babunovic teaches loader guide 23 includes only two corner guides 21,22 Fig. 1 disposed in respective positions to guide diagonally opposite corners of said

article (C) C2 L40-45 (teaches bottom of container, but also includes the corners at the bottom).

Claim 35, Babunovic teaches a controller 55 arranged to command said advancing device 15 to advance said conveyor 10 and thereby transport said article (C) along said load path (of 10) and into a delivered position (point of 61 and 33 of 11 meet) on said receiver 61 and then to reverse C2 L52-56 said conveyor 10 momentarily before said turret indexes 60, said article (C) being an open-ended container of rectangularly tubular form Fig. 1.

Claim 47, Babunovic teaches advancing a loader 16 along an endless path of 10 into a region of which a second path extends (of 60 and 11) and causing said loader 16 to deliver an article (C) to a receiver 61 located on said second path at said region (of 60 and 11), momentarily reversing C2 L52-56 said loader 16 out of said region immediately following the delivery of said article (C) to said receiver 61, and advancing said receiver 61 along said second path toward 11.

Claim 48, Babunovic teaches said article (C) is a partially formed container which, when delivered by said loader 16, has thereby been received over said receiver 61 which is in the form of a mandrel Fig. 1.

Claim Rejections - 35 USC § 103

The following is a quotation of 35 U.S.C. 103(a) which forms the basis for all obviousness rejections set forth in this Office action:

> (a) A patent may not be obtained though the invention is not identically disclosed or described as set forth in section 102 of this title, if the differences between the subject matter sought to be patented and the prior art are such that the subject matter as a whole would have been obvious at the time the

invention was made to a person having ordinary skill in the art to which said subject matter pertains. Patentability shall not be negatived by the manner in which the invention was made.

Claims 36-38, and 43 are rejected under 35 U.S.C. 103(a) as being unpatentable over Babunovic U.S. Patent No. 3,517,794 in view of Peltier U.S. Patent No. 5,950,799. Claim 36, Babunovic teaches a feeding device C2 L47-50 arranged to feed said article (C) to said loading device 10, but Peltier teaches a feeding servo motor (of 32 C5 L31-35) arranged to drive said feeding device C2 L47-50 of Babunovic), and wherein said advancing device 15 of Babunovic is a loading servo motor (of 34 C5 L31-35) and said driving device (M of Babunovic to be replaced by 32 C5 L31-35 of Peltier) is a receiving servo motor (36 C5 L31-35 Peltier), said controller (72 of Peltier) being programmed to synchronize operation of said loading servo motor (32,34,36 C5 L31-35) with at least one of said receiving servo motor (32 C5 L31-35 of Peltier) and said feeding servo motor (32,34,36 C5 L31-35). It would be obvious to one of ordinary skill to use servo motors and controllers as taught by Peltier into the invention of Babunovic in order to have individual control of the transfer pieces for greater design flexibility.

Claim 37, Babunovic does not teach as Peltier teaches said controller 72 has a virtual time axis to which the synchronized servo motors (32,34,36 C5 L31-35) are slaved via respective electronic cams programmed into the controller 72 C8 L43-47. It would be obvious to one of ordinary skill to use a controller that has a virtual time axis as taught by Peltier into the invention of Babunovic in order to monitor the control parameters and increase the efficiency of the system.

Claim 38, Babunovic does not teach as Peltier teaches said controller 72 is programmed to provide electronic cam profiles that define accelerations, decelerations,

and dwells of the servo motors (32, controller that has a virtual time axis 34,36 C5 L31-35) Fig. 4A-C C8 L43-47. It would be obvious to one of ordinary skill to use a controller that defines accelerations decelerations, and dwells of the servo motor as taught by Peltier into the invention of Babunovic in order to monitor the control parameters and increase the efficiency of the system.

Claim 43, Babunovic does not teach as Peltier teaches a feedback device (operator console) which serves to inform said controller 72 as to the position of said loading servo motor 32,34,36 C3 L50-55. It would be obvious to one of ordinary skill to use a feedback device as taught by Peltier into the invention of Babunovic in order to monitor the control parameters and increase the efficiency of the system.

Claims 39-41 are rejected under 35 U.S.C. 103(a) as being unpatentable over Babunovic U.S. Patent No. 3,517,794 in view of Peltier U.S. Patent No. 5,950,799 in view of Lee Korean Publication No KR 2003008343.

Claim 39, Babunovic does not teach as Lee teaches said controller 19 is programmed to provide electronic clutches 12 arranged to terminate the operation of the servo motors 11 in response to predetermined unacceptable sensor input values (of LS1, LS2,LS3,LS4,14,17) of any one or more parameters selected from the group consisting of air pressure, vacuum pressure, electrical power, fault status of various apparatus components, amount of product remaining in tanks, and heater temperatures (see Page 3 of Translation 2nd and 3rd paragraphs under Structure and Operation of the Invention). It would be obvious to one of ordinary skill to use a sensor to control the motor

operations with an electronic clutch as taught by Lee into the invention of Babunovic in order to position the article during transport.

Claim 40, Babunovic does not teach as Lee teaches a pre-load detection sensor (LS1) arranged to detect presence of said article 2 in a pre-load position on said loading device 1, wherein said controller 19 is programmed to include an electronic clutch 12 arranged to preclude operating of said loading servo motor 11 in response to an indication by said pre-load detection sensor LS1 that no article 2 is present in said pre-load position (see Page 3 of Translation 1st and 2nd paragraphs under Structure and Operation of the Invention). It would be obvious to one of ordinary skill to use a sensor to control the positions as taught by Lee into the invention of Babunovic for ease of transport.

Claim 41, Babunovic does not teach as Peltier teaches said controller 72 has a virtual time axis to which the synchronized servo motors (32,34,36 C5 L31-35) are slaved via respective electronic cams programmed into the controller 72 C8 L43-47, Lee teaches wherein said controller 19 is programmed to provide electronic clutches 12 arranged to terminate the operation of the servo motors 11 in response to predetermined unacceptable sensor input values (of LS1, LS2,LS3,LS4,14,17) of any one or more parameters selected from the group consisting of air pressure, vacuum pressure, electrical power, fault status of various apparatus components, amount of product remaining in tanks, and heater temperatures (see Page 3 of Translation 2nd and 3rd paragraphs under Structure and Operation of the Invention), and wherein said controller 19 is programmed to disable the electronic clutch(es) 12, remove power from the servo

motors 11, and stop the virtual time axis (T) in response to a sensed dangerous condition or stop command (see Page 4 of Translation 6th and7th paragraphs under Structure and Operation of the Invention). It would be obvious to one of ordinary skill to use synchronize the motors as taught by Peltier and use sensors to position the article as taught by Lee into the invention of Babunovic in order to limit the mechanical actuating to limit failures.

Claim 46 is rejected under 35 U.S.C. 103(a) as being unpatentable over Babunovic U.S. Patent No. 3,517,794.

Claim 46, Babunovic teaches said loader 16but does not specify that the loader comprises ultra-high molecular weight polyethylene.

The selection of a known material based upon its suitability for the intended use is a design consideration within the skill of the art. In re Leshin, 227 F.2d 197, 125 USPQ 416 (CCPA 1960).

Claims 49 and 50 are rejected under 35 U.S.C. 103(a) as being unpatentable over Babunovic U.S. Patent No. 3,517,794 in view of Mizuma U.S. Patent No. 4,933,727.

Claim 49, Babunovic does not teach as Mizuma teaches comprising causing an appropriately programmed controller 162,163 to command a loading servo motor 161 to advance an endless conveyor (10 of Babunovic) until said loader 16 of Babunovic which is carried by said conveyor 10 of Babunovic has propelled said article (C) along a load path (of 10 of Babuinovic) and onto said receiver (61 of Babunovic) and to command said loading servo motor 161 of Mizuma to reverse C25 L40-45 said conveyor 10 of

Babunovic once said loader 16 of Babunovic has propelled said article (C) onto said receiver 61 of Babunovic. It would be obvious to one of ordinary skill to use the controller in order to reverse the conveyor as taught by Mizuma into the invention of Babunovic in order to have individual control of the transfer pieces for greater design flexibility.

Claim 50, Babunovic does not teach as Mizuma teaches causing the appropriately programmed controller 162,163 to command said conveyor (10of Babunovic) to start reversing and thereafter to command said receiver 61 of Babunovic to advance along said second path C25 L40-45. It would be obvious to one of ordinary skill to use a controller to command the conveyor to start reversing as taught by Mizuma into the invention of Babunovic in order to keep the system in order.

Claims 51,52,54, and 58 are rejected under 35 U.S.C. 103(a) as being unpatentable over Babunovic U.S. Patent No. 3,517,794 in view of Mizuma U.S. Patent No. 4,933,727 in view of Peltier U.S. Patent No. 5,950,799.

Claim 51, Babunovic does not teach as Peltier teaches feeding said article (C) of Babunovic to said endless conveyor 10 of Babunovic before propelling said article (C) of Babunovic along said load path 10 of Babunovic, and causing the appropriately programmed controller 72 to synchronize the operation of said loading servo motor (32,34,36 C5 L31-35) with at least one of a receiving servo motor (32,34,36 C5 L31-35) and a feeding servo motor (32,34,36 C5 L31-35). It would be obvious to one of ordinary skill to use servo motors and controllers as taught by Peltier into the invention of

Babunovic in order to have individual control of the transfer pieces for greater design flexibility.

Claim 52, Babunovic does not teach as Peltier teaches causing said controller 72 to provide a virtual time axis and to enslave the servo motors 32,34,36 to said virtual time axis via respective electronic cams programmed into the controller 72 Fig. 4A-C C8 L43-47. It would be obvious to one of ordinary skill to use a controller that defines accelerations decelerations, and dwells of the servo motor as taught by Peltier into the invention of Babunovic in order to monitor the control parameters and increase the efficiency of the system.

Claim 54, Babunovic does not teach as Peltier teaches causing the appropriately programmed controller 72 to provide an electronic loader cam profile which defines accelerations, decelerations, and dwell times of said loading servo motor 32,34,36 (32, controller that has a virtual time axis 34,36 C5 L31-35) Fig. 4A-C C8 L43-47. It would be obvious to one of ordinary skill to use a controller that defines accelerations decelerations, and dwells of the servo motor as taught by Peltier into the invention of Babunovic in order to monitor the control parameters and increase the efficiency of the system.

Claim 58, Babunovic does not teach as Peltier teaches feeding via operator console back to said controller 72 the position of said loading servo motor 32,34,36 C3 L50-55. It would be obvious to one of ordinary skill to use a feedback device as taught by Peltier into the invention of Babunovic in order to monitor the control parameters and increase the efficiency of the system.

Claims 55-57 are rejected under 35 U.S.C. 103(a) as being unpatentable over Babunovic U.S. Patent No. 3,517,794 in view of Mizuma U.S. Patent No. 4,933,727 in view of Lee Korean Publication No KR 2003008343.

Claim 55, Babunovic does not teach as Lee teaches causing the appropriately said programmed controller 19 to provide electronic clutches 12 and utilizing said clutches 12 to terminate the operation of the servo motors 11 in response to predetermined unacceptable sensor input values (of LS1, LS2,LS3,LS4,14,17) of any one or more parameters selected from the group consisting of air pressure, vacuum pressure, electrical power, fault status of various machine components, amount of product remaining in tanks, and heater temperatures (see Page 3 of Translation 2nd and 3rd paragraphs under Structure and Operation of the Invention). It would be obvious to one of ordinary skill to use a sensor to control the motor operations with an electronic clutch as taught by Lee into the invention of Babunovic in order to position the article during transport.

Claim 56, Babunovic does not teach as Lee teaches causing the appropriately programmed controller 19 to provide an electronic clutch 12 and utilizing said clutch 12 to preclude operation of said loading servo motor 11 in response to an indication that no carton 2 is present in a pre-load position (see Page 3 of Translation 1st and 2nd paragraphs under Structure and Operation of the Invention). It would be obvious to one of ordinary skill to use a sensor to control the positions as taught by Lee into the invention of Babunovic for ease of transport.

Claim 57, Babunovic does not teach as Lee teaches causing the appropriately programmed controller 19 to disable the electronic clutch(es) 12, remove power from the servo motor(s) 11, and stop the virtual time axis (T) in response to a sensed dangerous condition or stop command (via LS1, LS2,LS3,LS4,14,17). It would be obvious to one of ordinary skill to use a time period with the sensor to control the positions as taught by Lee into the invention of Babunovic for ease of transport.

Allowable Subject Matter

Claims 42,45, and 53 would be allowable if rewritten to overcome the rejection(s) under 35 U.S.C. 112, 1st paragraph, set forth in this Office action and to include all of the limitations of the base claim and any intervening claims.

Claim 44 is objected to as being dependent upon a rejected base claim, but would be allowable if rewritten in independent form including all of the limitations of the base claim and any intervening claims.

Conclusion

Any inquiry concerning this communication or earlier communications from the examiner should be directed to KAVEL P. SINGH whose telephone number is (571)272-2362. The examiner can normally be reached on M-F 8:30-5.

If attempts to reach the examiner by telephone are unsuccessful, the examiner's supervisor, Gene Crawford can be reached on (571) 272-6911. The fax phone number for the organization where this application or proceeding is assigned is 571-273-8300.

Information regarding the status of an application may be obtained from the Patent Application Information Retrieval (PAIR) system. Status information for published applications may be obtained from either Private PAIR or Public PAIR. Status information for unpublished applications is available through Private PAIR only. For more information about the PAIR system, see http://pair-direct.uspto.gov. Should you have questions on access to the Private PAIR system, contact the Electronic Business Center (EBC) at 866-217-9197 (toll-free). If you would like assistance from a USPTO Customer Service Representative or access to the automated information system, call 800-786-9199 (IN USA OR CANADA) or 571-272-1000.

/Kavel P Singh/
Examiner, Art Unit 3651

KPS

UNITED STATES PATENT and TRADEMARK OFFICE

COMMISSIONER FOR PATENTS
UNITED STATES PATENT AND TRADEMARK OFFICE
P.O BOX 1450
ALEXANDRIA, VA 22313-1450
www.uspto.gov

MAILED
10 NOV 2010
PCT LEGAL ADMINISTRATION

NIXON & VANDERHYE, PC
901 NORTH GLEBE ROAD, 11TH FLOOR
ARLINGTON VA 22203

In re Application of	:	DECISION ON RENEWED
VELISS et al	:	
Application No.: 11/793,001	:	
PCT No.: PCT/AU2006/000036	:	
Int. Filing Date: 12 January 2006	:	PETITION UNDER
Priority Date: 12 January 2005	:	
Attorney Docket No.: PTB-4398-705	:	
For: RESPIRATORY MASK HAVING GAS...	:	
MAKING THE MASK	:	37 CFR 1.181

This decision is in response to the "SECOND RENEWED PETITION UNDER 37 CFR 1.181" filed 13 September 2010, requesting to rescind the notification of abandonment mailed on 17 February 2009.

BACKGROUND

In a decision from this Office on 17 May 2010, the decision dismissed the petition filed on 19 June 2009 to rescind the notification of abandonment mailed on 17 February 2009.

Petitioner filed this second renewed petition on 13 September 2010 requesting the USPTO to rescind the notification of abandonment mailed on 17 February 2009.

DISCUSSION

Petitioner argues that, "applicants received a Notification of Missing Requirements dated January 10, 2010 stating that a declaration was not furnished and that they responded on February 29, 2008." Applicants indicated that in the response they stated that the declaration was provided by the International Bureau and that applicants merely provided a courtesy copy of the Declaration when entering the national phase. Petition then argues that the Notice of Abandonment was improper because the USPTO did not respond to Applicants' February 29, 2008 response because it was a bona fide attempt to address the Notice of Missing Requirements and within the time period of response.

Contrary to petitioner's arguments, the USPTO Notice of Missing Requirements mailed on 10 January 2008 did not indicate that a Declaration was not furnished but rather that the declaration submitted, "did not identify the application to which is directed." That is the declaration filed under PCT Rule 4.17(iv) was improper as it did not identify the application to which it was directed to PCT/ AU2006/000036.

As a result, the response filed on 29 February 2008 is not considered a "bona fide" attempt. A *bona fide* attempt advances the application to final action, and is substantially a complete reply to the non-final Office action, but consideration of some matter or compliance with some requirement has been inadvertently omitted, applicant may be given a new time period for reply under § 1.134 to supply the omission. In this instance, the reply was not a substantially complete reply to the Notice of Missing Requirements mailed on 10 January 2008 and no part was inadvertently omitted by applicants. Applicants' reply did not addressed the issued of the Notice of Missing Requirements. It only indicated that applicants merely provided to the USPTO a courtesy copy of the Declaration when entering the National Phase, and "therefore, no declaration identifying the application by the international application number and filing date is required." As a result, no Notification of Defective Response was merited as applicants response was not a response that raised to the level that necessitated such a Notice from the USPTO.

Accordingly, aforementioned application was properly abandoned on 17 February 2009 for failing to respond to the Notification of Missing Requirements within the time period set therein. The aforementioned application remains abandoned.

RECOMMENDATION

Petitioner may request revival of the application via petition under 37 CFR 1.137(b) as petitioner has provided the required reply a properly executed declaration.

This recommendation to file a petition under 37 CFR 1.137(b) should not be construed as an indication as to whether or not any such petition(s) will be favorably considered.

CONCLUSION

For the reasons above, the petition under 37 CFR 1.181 to rescind the Notice of Abandonment is **DISMISSED** without prejudice.

The application remains **ABANDONED**.

If reconsideration of the merits of the petition under 37 CFR 1.181 is desired, applicant must file a request for reconsideration within **TWO (2) MONTHS** from the mail date of this Decision. Any reconsideration request should include a cover letter entitled "Third Renewed Petition Under 37 CFR 1.181." Extensions of time are available under 37 CFR 1.136(a).

Any further correspondence with respect to this matter may be filed electronically via EFS-Web selecting the document description "Petition for review and processing by the PCT Legal Office" or by mail addressed to Mail Stop PCT, Commissioner for Patents, Office of PCT Legal Administration, P.O. Box 1450, Alexandria, Virginia 22313-1450, with the contents of the letter marked to the attention of the Office of PCT Legal Administration.

Rafael Bacares
PCT Legal Examiner
PCT Legal Office
Telephone: (571) 272-3276
Facsimile: (571) 273-0459

UNITED STATES PATENT and TRADEMARK OFFICE

COMMISSIONER FOR PATENTS
UNITED STATES PATENT AND TRADEMARK OFFICE
P.O BOX 1450
ALEXANDRIA, VA 22313-1450
www.uspto.gov

NIXON & VANDERHYE, PC
901 NORTH GLEBE ROAD, 11TH FLOOR
ARLINGTON VA 22203

MAILED
APR 12 2011
PCT LEGAL ADMINISTRATION

In re Application of	:	DECISION ON
VELISS et al	:	
Application No.: 11/793,001	:	
PCT No.: PCT/AU2006/000036	:	
Int. Filing Date: 12 January 2006	:	PETITION UNDER
Priority Date: 12 January 2005	:	
Attorney Docket No.: PTB-4398-705	:	
For: RESPIRATORY MASK HAVING GAS...	:	
MAKING THE MASK	:	37 CFR 1.137(b)

This decision is in response to applicants' "PETITION TO REVIVE UNINTENTIONALLY ABANDONED APPLICATION UNDER 37 C.F.R. 1.137(b)," filed on 10 February 2011.

BACKGROUND

In a decision from this Office on 10 November 2010, the petition filed on 13 September 2010 under 37 CFR 1.181 was dismissed.

On 10 February 2011 applicants submitted a petition under 37 CFR 1.137(b).

DISCUSSION

A grantable petition to revive an abandoned application under 37 CFR 1.137(b) must be accompanied by (1) the required reply, unless previously filed. In a nonprovisional application abandoned for failure to prosecute, the required reply may be met by the filing of a continuing application; (2) the petition fee as set forth in § 1.17(m); and (3) a statement that the entire delay in filing the required reply from the due date for the reply until the filing of a grantable petition pursuant to this paragraph was unintentional. The Commissioner may require additional information where there is a question whether the delay was unintentional; and (4) any terminal disclaimer (and fee as set forth in § 1.20 (d)) required pursuant to paragraph (c) of this section.

Petitioner has provided: (1) the proper reply by submitting a properly executed declaration, (2) the petition fee set forth in §1.17(m) and (3) the proper statement under 137(b)(3). In this application, no terminal disclaimer is required.

Accordingly, the petition is deemed to satisfy requirements (1) - (4) under 37 CFR 1.137(b).

DECISION

The petition under 37 CFR 1.137(b) is **GRANTED**.

This application is being returned to the United States Designated/Elected Office (DO/EO/US) for continued processing. The 35 USC 371(c)(1), (c)(2), and (c)(4) date of this application is **17 March 2010**.

Rafael Bacares
PCT Legal Examiner
PCT Legal Examiner
Telephone: (571) 272-3276
Facsimile: (571) 272-0459

UNITED STATES PATENT AND TRADEMARK OFFICE

Commissioner for Patents
United States Patent and Trademark Office
P.O. Box 1450
Alexandria, VA 22313-1450
www.uspto.gov

YOUNG & THOMPSON
209 Madison Street
Suite 500
Alexandria VA 22314

MAILED
MAR 08 2012
OFFICE OF PETITIONS

In re Application of	:	
Sharp	:	
Application No. 11/793,144	:	
Filed: April 4, 2008	:	DECISION ON PETITION
Attorney Docket No. 4521-1022	:	UNDER 37 C.F.R. § 1.137(B)
Title: TILTING ACCESSORY HITCH	:	
WITH SPECIFIC BEARING DESIGN	:	

This is a decision on the petition pursuant to 37 C.F.R. § 1.137(b), filed February 8, 2012, to revive the above-identified application.

This petition pursuant to 37 C.F.R. § 1.137(b) is **GRANTED.**

The above-identified application became abandoned for failure to reply within the meaning of 37 C.F.R § 1.113 in a timely manner to the final Office action mailed December 3, 2010, which set a shortened statutory period for reply of three months. A notice of appeal was filed on May 3, 2011 along with a two-month extension of time so as to make timely the submission, an after-final amendment was filed on July 5, 2011[1] and an advisory action was mailed on January 12, 2012. No extensions of time under the provisions of 37 C.F.R § 1.136(a) were requested, and no further submissions were received. Accordingly, the above-identified application became abandoned on July 4, 2011. A notice of abandonment was mailed on January 20, 2012.

1 It is noted that July 3, 2011 fell on a Sunday and July 4, 2011 fell on a federal holiday.

On February 8, 2012, Petitioner filed a RCE along with the associated fee, the petition fee, and the proper statement of unintentional delay.

The RCE has been accepted as the required reply under 37 C.F.R. § 1.137(b)(1). As such, the first three requirements of Rule 1.137(b) have been met. The fourth requirement of Rule 1.137(b) is not applicable, as a terminal disclaimer is not required.[2]

The Technology Center will be notified of this decision. The Technology Center's support staff will notify the Examiner of this decision, so that the submission under 37 C.F.R. § 1.114 - the amendment submitted on July 5, 2011 - can be processed in due course.

Petitioner may find it beneficial to view Private PAIR within a fortnight of the present decision to ensure that the revival has been acknowledged by the Technology Center in response to this decision. It is noted that all inquiries with regard to any failure of that change in status should be directed to the Technology Center where that change of status must be effected - **the Office of Petitions cannot effectuate a change of status.**

Telephone inquiries regarding *this decision* should be directed to the undersigned at (571) 272-3225.[3] All other inquiries concerning examination procedures or status of the application should be directed to the Technology Center.

Paul Shanoski
Senior Attorney
Office of Petitions

2 See Rule 1.137(d).
3 Petitioner will note that all practice before the Office should be in writing, and the action of the Office will be based exclusively on the written record in the Office. See 37 C.F.R. § 1.2. As such, Petitioner is reminded that no telephone discussion may be controlling or considered authority for Petitioner's further action(s).

UNITED STATES PATENT AND TRADEMARK OFFICE

Commissioner for Patents
United States Patent and Trademark Office
P.O. Box 1450
Alexandria, VA 22313-1450
www.uspto.gov

MINTZ, LEVIN, COHN, FERRIS, GLOVSKY AND POPEO, P.C
ONE FINANCIAL CENTER
BOSTON, MA 02111

MAILED

JUN 27 2011

OFFICE OF PETITIONS

In re Application of
Pascal Grenier, et al.
Application No. 11/793,180
Filed: September 2, 2008
Attorney Docket No. 28069-604 NAT'L

DECISION ON PETITION

This is a decision on the petition, filed May 10, 2011, which is being treated as a petition under 37 CFR 1.181 (no fee) requesting withdrawal of the holding of abandonment in the above-identified application.

The petition is **GRANTED**.

This application was held abandoned for failure to reply to the Notice of Non-Compliant Amendment (Notice), mailed August 31, 2010, which set a one (1) month or thirty day shortened statutory period for reply. A Notice of Abandonment was mailed on April 12, 2011.

Petitioner asserts that the Office action dated August 31 2010 was not received.

A review of the written record indicates no irregularity in the mailing of the Office action, and, in the absence of any irregularity, there is a strong presumption that the Office action was properly mailed to the practitioner at the address of record. This presumption may be overcome by a showing that the Office action was not in fact received. In this regard, the showing required to establish the failure to receive the Office action must consist of the following:

1. a statement from practitioner stating that the Office action was not received by the practitioner;

2. a statement from the practitioner attesting to the fact that a search of the file jacket and docket records indicates that the Office action was not received; and

3. a copy of the docket record where the non-received Office action would have been entered had it been received and docketed must be attached to and referenced in the practitioner's statement.

See MPEP § 711.03(c) under subheading "Petition to Withdraw Holding of Abandonment Based on Failure to Receive Office Action," and "Withdrawing the Holding of Abandonment When Office Actions Are Not Received," 1156 Official Gazette 53 (November 16, 1993).

The petition satisfies the above-stated requirements. Accordingly, the application was not abandoned in fact.

In view of the above, the Notice of Abandonment is hereby **vacated** and the holding of abandonment **withdrawn**.

Telephone inquiries concerning this decision should be directed to April M. Wise at 571-272-1642. All other inquiries concerning the examination or status of this application should be directed to the Technology Center.

This application is being referred to the Technology Center technical support staff of Art Unit 1615 for re-mailing the Office action of August 31, 2010. The period for reply will run from the mailing date of the Office action.

/Carl Friedman/
Carl Friedman
Petitions Examiner
Office of Petitions

UNITED STATES PATENT AND TRADEMARK OFFICE

UNITED STATES DEPARTMENT OF COMMERCE
United States Patent and Trademark Office
Address: COMMISSIONER FOR PATENTS
P.O. Box 1450
Alexandria, Virginia 22313-1450
www.uspto.gov

APPLICATION NO.	FILING DATE	FIRST NAMED INVENTOR	ATTORNEY DOCKET NO.	CONFIRMATION NO.
11/793,341	06/18/2007	Michel Cadio	PUT050002	3659

7590 06/17/2011
FLETCHER YODER P.C.
7915 FM 1960 RD. WEST
SUITE 330
HOUSTON, TX 77070

EXAMINER
FERENCE, JAMES M

ART UNIT	PAPER NUMBER
3635	

MAIL DATE	DELIVERY MODE
06/17/2011	PAPER

DECISION DISMISSING PETITION UNDER 37 CFR 1.138(d)

The declaration of express abandonment will not be recognized

This is in response to the petition under 37 CFR 1.138(d), requesting for a refund of any previously paid search fee and excess claims fee in the above-identified application.

The petition is dismissed.

The express abandonment will **not** be recognized for the reason(s) indicated below:

1. ☐ The petition was not filed in sufficient time to permit the appropriate officials to recognize the abandonment before an examination has been made of the application. See 37 CFR 1.138(d).
2. ☐ The petition was not signed by a party authorized by 37 CFR 1.33(b)(1), (3) or (4).
3. ☑ The application is not an application filed under 35 U.S.C. 111(a) on or after December 8, 2004.
4. ☐ The petition for express abandonment under 1.138(d) is dismissed because the applicant did not pay any search fee and excess claims fees in the above-identified application.

Telephone inquiries should be directed to the Office of Data Management at (571) 272-4200.

Mimi Farmer

Patent Publication Branch
Office of Data Management

FORM PET651D (Rev. 08/07)

UNITED STATES PATENT AND TRADEMARK OFFICE

COMMISSIONER FOR PATENTS
UNITED STATES PATENT AND TRADEMARK OFFICE
P.O. BOX 1450
ALEXANDRIA, VA 22313-1450
www.uspto.gov

FINNEGAN, HENDERSON, FARABOW,
GARRETT & DUNNER LLP
901 NEW YORK AVENUE, NW
WASHINGTON DC 20001-4413

MAILED

SEP 30 2010

OFFICE OF PETITIONS

In re Application of	:	
FOLESTAD et al.	:	
Application No. 11/793,391	:	ON APPLICATION FOR
Filed: 06/19/2007	:	PATENT TERM ADJUSTMENT
Docket No. MRL- 11285.0003	:	

This is in response to the APPLICATION FOR PATENT TERM ADJUSTMENT - PRE-GRANT filed September 13, 2010. Applicants requests that the initial determination of patent term adjustment under 35 U.S.C. 154(b) be corrected from four hundred fifteen (415) days to four hundred eighteen (418) days.

The application for patent term adjustment is **DISMISSED**.

Applicants dispute the calculation of the period of adjustment under 37 CFR 1.702(a)(1).

Pursuant to 37 CFR 1.702(a):

> Subject to the provisions of 35 U.S.C. 154(b) and this subpart, the term of an original patent shall be adjusted if the issuance of the patent was delayed due to the failure of the Office to:
>
> (1) Mail at least one of a notification under 35 U.S.C. 132 or a notice of allowance under 35 U.S.C. 151 not later than fourteen months after the date on which the application was filed under 35 U.S.C. 111(a) or fulfilled

the requirements of 35 U.S.C. 371 in an international application;

Pursuant to MPEP 1893.03(b),

The NOTIFICATION OF ACCEPTANCE OF APPLICATION UNDER 35 U.S.C. 371 AND 37 CFR 1.495 (Form PCT/DO/EO/903), a copy of which is reproduced in MPEP § 1893.03(a), indicates the date of receipt of the 35 U.S.C. 371(c)(1), (c)(2), and (c)(4) requirements, and it also indicates the date of completion of all 35 U.S.C. 371 requirements.

* * *

The "Date of Completion of all 35 U.S.C. 371 Requirements" included on the NOTIFICATION OF ACCEPTANCE OF APPLICATION UNDER 35 U.S.C. 371 AND 37 CFR 1.495 (Form PCT/DO/EO/903) is relevant for purposes of patent term adjustment under 35 U.S.C. 154(b)(1)(A)(i)(II) and 37 CFR 1.702(a)(1) when the USPTO has failed to mail at least one of a notification under 35 U.S.C. 132 or a notice of allowance under 35 U.S.C. 151 not later than fourteen months after the date on which the requirements under 35 U.S.C. 371 were fulfilled. This date is the latest of:

(A) the date of submission of the basic national fee;

(B) the date of submission or communication of the copy of the international application;

(C) the date of submission of the translation of the international application if the international application is not in the English language;

(D) the date of submission of an oath or declaration of the inventor in compliance with 35 U.S.C. 371 (c)(4) (see 37 CFR 1.497(c) for an explanation of when an oath or declaration will be accepted as complying with 35 U.S.C. 371(c)(4));

(E) the earlier of 30 months from the priority date or the date of request for early processing under

35 U.S.C. 371(f) if requested prior to 30 months from the priority date (Form PCT/DO/EO/903 will indicate the date early processing was requested);
(F) if a request for early processing has not been requested prior to 30 months from the priority date, the date of submission of any translation of the annexes to the international preliminary examination report if the translation of the annexes are filed within the time period set in a Notification of Missing Requirements (Form PCT/DO/EO/905) requiring either an English translation of the international application or an oath or declaration; and

(G) the date of submission of any surcharge for submitting the oath or declaration later than 30 months from the priority date.

Applicants incorrectly calculated the period of adjustment under 37 CFR 1.702(a)(1) based on the date of receipt of the 35 U.S.C. 371(c)(1), (c)(2), and (c)(4) requirements, June 19, 2007, instead of the date of completion of all 35 U.S.C. 371 requirements, June 22, 2007.

On October 29, 2009, the Office mailed a first notification under 35 U.S.C. 132, fourteen months and 433 days after the date of completion of all 35 U.S.C. 371 requirements, June 22, 2007. Accordingly, the period of adjustment of 433 days for Office delay pursuant to 37 CFR 1.702(a)(1) will remain.

The Office acknowledges the $200.00 fee set forth in 37 CFR 1.18(e).

The Office of Data Management has been advised of this decision. This application is being referred to the Office of Data Management for issuance of the patent.

Telephone inquiries specific to this decision should be directed to the undersigned at (571) 272-3211.

C. T. Donnell

Christina Tartera Donnell
Senior Petitions Attorney
Office of Petitions

UNITED STATES PATENT AND TRADEMARK OFFICE

Commissioner for Patents
United States Patent and Trademark Office
P.O. Box 1450
Alexandria, VA 22313-1450
www.uspto.gov

Patent No. : 8,023,146 B2
Ser. No. : 11/793,471
Inventor(s) : Price et al.
Issued : Sep. 20, 2011
Title : PRINT CONTROL DEVICE, INFORMATION PROCESSING DEVICE, METHOD OF PRINT CONTROL DEVICE, METHOD OF INFORMATION PROCESSING DEVICE AND COMPUTER PROGRAM
Docket No. : CEL0008US01
Re: Request for Certificate of Correction

Consideration has been given your request for the issuance of a certificate of correction for the above-identified patent under the provisions of Rule(s) 1.322 and/or 1.323.

Assignees' names and addresses (assignment data) printed in a patent, are based *solely* on information supplied in the appropriate space for identifying the assignment data, i.e., item 3 of the Issue Fee Transmittal Form PTOL-85B. Granting of a request under 37 CFR 3.81(b) is required to correct applicant's error providing ***incorrect or erroneous*** assignment data, *before* issuance of a Certificate of Correction, under 37 CFR 1.323 *(see Manual of Patent Examining Procedures (M.P.E.P) Chp.1400, sect. 1481).* This procedure is required *at any time after the issue fee is paid*, including after issuance of the patent.

In view of the foregoing, your request, in this matter, is hereby denied.

A request to correct the Assignee under 37 CFR 3.81(b) should include:

A. **the processing fee set forth in 37 CFR 1. 17(i) (currently $130);**
B. a statement that the failure to include the correct assignee name on the PTOL-85B was inadvertent; and
C. a copy of the Notice of Recordation of Assignment Document, reflecting the reel and frame number where the assignment(s) is recorded and/or reflecting proof of *the date* the assignment was submitted for recordation.

In the Request, Applicant(s) may request that the file be forwarded to Certificates of Correction Branch, for issuance of a Certificate of Correction, if the Request is granted.

Any request under 37 CFR 3.81(b) should be directed to the following address or facsimile number:

By mail: Mail Stop PETITIONS
Commissioner for Patents
Post Office Box 1450
Alexandria, VA 22313-1450

By hand: Customer Service Window
Mail Stop Petitions
Randolph Building
401 Dulany Street
Alexandria, VA 22314

By fax: (703) 872-9306
ATTN: Office of Petitions

If a fee (currently $100) was previously submitted for consideration of a Request for Certificate of Correction, under CFR 1.323, to correct assignment data, no additional fee is required.

Ennis Young
For Mary Diggs
Decisions & Certificates
of Correction Branch
(571) **272-3435** or (703) 756-1814

Doc Code: PET.AUTO **Document Description: Petition automatically granted by EFS-Web**	PTO/SB/141 U.S. Patent and Trademark Office Department of Commerce

Electronic Petition Request	**Petition to Correct Assignee After Payment of Issue Fee (37 CFR 3.81(b))**
Application Number	11793471
Filing Date	20-Jun-2007
First Named Inventor	Michael Price
Attorney Docket Number	CEL0008US01
Title of Invention	PRINT CONTROL DEVICE, INFORMATION PROCESSING DEVICE, METHOD OF PRINT CONTROL DEVICE, METHOD OF INFORMATION PROCESSING DEVICE AND COMPUTER PROGRAM

Pursuant to 37 CFR 3.81(b), applicant hereby request that the listed assignee with respect to U.S. Patent Number 8023146 be corrected to accurately reflect the name of the assignee on the front page of the above-identified patent by way of a Certificate of Correction.

☒ I certify, in accordance with 37 CFR 1.4(d)(4), that the assignment was submitted for recordation as set forth in 37 CFR 3.11 before issuance of the patent.

Correction of Assignee

Current Assignment Listed (240 char limit)
The assignment information is currently listed as:

Canon Kabushiki Kaisha

Update Assignment Listing to (240 char limit)

Change assignment information to the following:

CANON EUROPA NV, Amstelveen

☒ As required by 37 CFR 3.81, a Request for a Certificate of Correction is being filed herewith, along with the fee set forth in 37 CFR 1.20(a).

- ◯ Applicant(s) status remains as OTHER THAN small entity.
- ◯ Applicant claims SMALL ENTITY status. See 37 CFR 1.27.
- ◯ Applicant(s) status remains as SMALL ENTITY.
- ◉ Applicant is no longer claiming small entity status. See 37 CFR 1.27(g)(2).

I hereby declare that all statements made herein of my own knowledge are true and that all statements made on information and belief are believed to be true; and further that these statements were made with the knowledge that willful false statements and the like so made are punishable by fine or imprisonment, or both, under Section 1001 of Title 18 of the United States Code and that such willful false statements may jeopardize the validity of the application or any patent issued thereon.

THIS PORTION MUST BE COMPLETED BY THE SIGNATORY OR SIGNATORIES

I certify, in accordance with 37 CFR 1.4(d)(4) that I am:

- ◉ An attorney or agent registered to practice before the Patent and Trademark Office who has been given power of attorney in this application.
- ◯ An attorney or agent registered to practice before the Patent and Trademark Office, acting in a representative capacity.
- ◯ A sole inventor
- ◯ A joint inventor; I certify that I am authorized to sign this submission on behalf of all of the inventors
- ◯ A joint inventor; all of whom are signing this request
- ◯ The assignee of record of the entire interest that has properly made itself of record pursuant to 37 CFR 3.71

Signature	/Amichai Kotev/
Name	Amichai Kotev
Registration Number, if applicable	57668

UNITED STATES PATENT AND TRADEMARK OFFICE

Commissioner for Patents
United States Patent and Trademark Office
P.O. Box 1450
Alexandria, VA 22313-1450
www.uspto.gov

Decision Date:	January 20, 2012
In re Patent No.	8023146
Issue Date:	20-Sep-2011
Application No	11793471
Filed date	20-Jun-2007
Attorney Docket No	CEL0008US01

DECISION ON REQUEST
UNDER 37 CFR 3.81(b)

This is an electronic decision on the request filed January 20, 2012 under 37 CFR 3.81(b) to correct the name of the assignee of the above-identified patent by way of a Certificate of Correction.

Petitioner request that the listed assignment information be replace with updated assignment information.
Assignment Information Currently Listed As:

Canon Kabushiki Kaisha

Change Assignment Information to the Following:

CANON EUROPA NV, Amstelveen

The request is GRANTED.

Telephone inquiries concerning this decision may be directed to the the Patent Electronic Business Center (EBC) at 866-217-9197.

Inquiries regarding the issuance of a Certificate of Correction should be directed to the Certificate of Correction Branch at (571) 272-4200.

The Certificate of Correction Branch will be notified of this decision granting the request under 37 CFR 3.81(b) and directing issuance of the requested Certificate of Correction.

Office of Petitions

UNITED STATES PATENT AND TRADEMARK OFFICE

Commissioner for Patents
United States Patent and Trademark Office
P.O. Box 1450
Alexandria, VA 22313-1450
www.uspto.gov

Decision Date : October 17,2011

In re Application of :

Hilmar Bischoff

DECISION ON PETITION

UNDER CFR 1.313(c)(2)

Application No : 11793482

Filed : 16-Jan-2008

Attorney Docket No : BHC 041341

This is an electronic decision on the petition under 37 CFR 1.313(c)(2), filed October 17,2011 , to withdraw the above-identified application from issue after payment of the issue fee.

The petition is **GRANTED.**

The above-identified application is withdrawn from issue for consideration of a submission under 37 CFR 1.114 (request for continued examination). See 37 CFR 1.313(c)(2).

Petitioner is advised that the issue fee paid in this application cannot be refunded. If, however, this application is again allowed, petitioner may request that it be applied towards the issue fee required by the new Notice of Allowance.

Telephone inquiries concerning this decision should be directed to the Patent Electronic Business Center (EBC) at 866-217-9197.

This application file is being referred to Technology Center AU 1625 for processing of the request for continuing examination under 37 CFR 1.114 .

Office of Petitions

Doc Code: PET.AUTO Document Description: Petition automatically granted by EFS-Web	PTO/SB/140 U.S. Patent and Trademark Office Department of Commerce

Electronic Petition Request	**PETITION TO WITHDRAW AN APPLICATION FROM ISSUE AFTER PAYMENT OF THE ISSUE FEE UNDER 37 CFR 1.313(c)**
Application Number	11793482
Filing Date	16-Jan-2008
First Named Inventor	Hilmar Bischoff
Art Unit	1625
Examiner Name	D MARGARET SEAMAN
Attorney Docket Number	BHC 041341
Title	CHEMICAL COMPOUND AND ITS USE

An application may be withdrawn from issue for further action upon petition by the applicant. To request that the Office withdraw an application from issue, applicant must file a petition under this section including the fee set forth in § 1.17(h) and a showing of good and sufficient reasons why withdrawal of the application from issue is necessary.

APPLICANT HEREBY PETITIONS TO WITHDRAW THIS APPLICATION FROM ISSUE UNDER 37 CFR 1.313(c).

A grantable petition requires the following items:
(1) Petition fee; and
(2) One of the following reasons:
(a) Unpatentability of one or more claims, which must be accompanied by an unequivocal statement that one or more claims are unpatentable, an amendment to such claim or claims, and an explanation as to how the amendment causes such claim or claims to be patentable;
(b) Consideration of a request for continued examination in compliance with § 1.114 (for a utility or plant application only); or
(c) Express abandonment of the application. Such express abandonment may be in favor of a continuing application, but not a CPA under 37 CFR 1.53(d).

Petition Fee

☐ Applicant claims SMALL ENTITY status. See 37 CFR 1.27.

☐ Applicant is no longer claiming SMALL ENTITY status. See 37 CFR 1.27(g)(2).

☐ Applicant(s) status remains as SMALL ENTITY.

☒ Applicant(s) status remains as other than SMALL ENTITY

Reason for withdrawal from issue

○ One or more claims are unpatentable

◉ Consideration of a request for continued examination (RCE) (List of Required Documents and Fees)

○ Applicant hereby expressly abandons the instant application (any attorney/agent signing for this reason must have power of attorney pursuant to 37 CFR 1.32(b)).

RCE request,submission, and fee.

☐ I certify, in accordance with 37 CFR 1.4(d)(4) that : The RCE request ,submission, and fee have already been filed in the above-identified application on

☒ Are attached.

THIS PORTION MUST BE COMPLETED BY THE SIGNATORY OR SIGNATORIES

I certify, in accordance with 37 CFR 1.4(d)(4) that I am:

◉ An attorney or agent registered to practice before the Patent and Trademark Office who has been given power of attorney in this application.

○ An attorney or agent registered to practice before the Patent and Trademark Office, acting in a representative capacity.

○ A sole inventor

○ A joint inventor; I certify that I am authorized to sign this submission on behalf of all of the inventors

○ A joint inventor; all of whom are signing this e-petition

○ The assignee of record of the entire interest that has properly made itself of record pursuant to 37 CFR 3.71

Signature	/KAREN B. KING/
Name	Karen B. King
Registration Number	41898

PTO/SB/32/PCT-EP (05-10)
Approved for use through 07/31/2012. OMB 0651-0058
U.S. Patent and Trademark Office; U.S. DEPARTMENT OF COMMERCE

Under the Paperwork Reduction Act of 1995, no persons are required to respond to a collection of information unless it displays a valid OMB control number.

REQUEST FOR PARTICIPATION IN THE PATENT COOPERATION TREATY - PATENT PROSECUTION HIGHWAY (PCT-PPH) PILOT PROGRAM BETWEEN THE EUROPEAN PATENT OFFICE (EPO) AND THE USPTO

Application No:	11/793,502	Filing date:	June 20,2007
First Named Inventor:	Andreas Stefan BIRKENFELD		
Title of the Invention:	Communications System with a Network for Transmitting Image Data to at Least One Illustrating Device		

THIS REQUEST FOR PARTICIPATION IN THE PCT-PPH PILOT PROGRAM ALONG WITH THE REQUIRED DOCUMENTS MUST BE SUBMITTED VIA EFS-WEB. INFORMATION REGARDING EFS-WEB IS AVAILABLE AT HTTP://WWW.USPTO.GOV/EBC/EFS_HELP.HTML

APPLICANT HEREBY REQUESTS PARTICIPATION IN THE PCT-PPH PROGRAM AND PETITIONS TO MAKE THE ABOVE-IDENTIFIED APPLICATION SPECIAL UNDER THE PCT-PPH PROGRAM.

The above-identified application is (1) a national stage entry of the corresponding PCT application, or (2) a national stage entry of another PCT application which claims priority to the corresponding PCT application, or (3) a national application that claims domestic/ foreign priority to the corresponding PCT application, or (4) a national application which forms the basis for the priority claim in the corresponding PCT application, or (5) a continuing application of a U.S. application that satisfies one of (1) to (4) above, or (6) a U.S. application that claims domestic benefit to a U.S. provisional application which forms the basis for the priority claim in the corresponding PCT application.

The corresponding PCT application number(s) is/are: PCT/EP2005/056920

The international date of the corresponding PCT application(s) is/are: December 19, 2005

I. List of Required Documents:

a. **A copy of the latest international work product (WO/ISA, WO/IPEA, or IPER) in the above-identified corresponding PCT application(s)**

☐ Is attached

☑ Is not attached because the document is already in the U.S. application.

b. **A copy of all claims which were indicated as having novelty, inventive step and industrial applicability in the above-identified corresponding PCT application(s).**

☐ Is attached

☑ Is not attached because the document is already in the U.S. application.

c. **English translations of the documents in a. and b. above are attached (if the documents are not in the English language). A statement that the English translation is accurate is attached for the document in b. above.**

This collection of information is required by 35 U.S.C. 119, 37 CFR 1.55, and 37 CFR 1.102(d). The information is required to obtain or retain a benefit by the public, which is to file (and by the USPTO to process) an application. Confidentiality is governed by 35 U.S.C. 122 and 37 CFR 1.11 and 1.14. This collection is estimated to take 2 hours to complete, including gathering, preparing, and submitting the completed application form to the USPTO. Time will vary depending upon the individual case. Any comments on the amount of time you require to complete this form and/or suggestions for reducing this burden, should be sent to the Chief Information Officer, U.S. Patent and Trademark Office, U.S. Department of Commerce, P.O. Box 1450, Alexandria, VA 22313-1450. DO NOT SEND FEES OR COMPLETED FORMS TO THIS ADDRESS.

Under the Paperwork Reduction Act of 1995, no persons are required to respond to a collection of information unless it displays a valid OMB control number.

REQUEST FOR PARTICIPATION IN THE PCT-PPH PILOT PROGRAM BETWEEN THE EPO AND THE USPTO

(continued)

Application No.:	11/793,502
First Named Inventor:	Andreas Stefan BIRKENFELD

d. **(1) An information disclosure statement listing the documents cited in the international work products (ISR, WO/ISA, WO/IPEA, IPER) of the corresponding PCT application.**

☐ is attached

☑ Has already been filed in the above-identified U.S. application on June 20, 2007

(2) Copies of all documents (except) for U.S. patents or U.S. patent application publications)

☐ Are attached.

☑ Have already been filed in the above-identified U.S. application on June 20, 2007

II. Claims Correspondence Table:

Claims in US Application	Patentable Claims in the corresponding PCT Application	Explanation regarding the correspondence
87 - 91	1 - 5	direct correspondence
92	6	U.S. claim amended to remove multiple dependency
		present in PCT claim
93	7	direct correspondence
94 - 100	8 - 14	U.S. claims amended to remove multiple dependencies
		present in PCT claims
101	15	direct correspondence
102 - 106	16 - 20	U.S. claims amended to remove multiple dependencies
		present in PCT claims
107	21	direct correspondence
108, 109	22, 23	U.S. claims amended to remove multiple dependencies
		present in PCT claims
110	24	direct correspondence
111	25	U.S. claim amended to remove multiple dependency
		present in PCT claim
112	26	direct correspondence
113 - 115	27 - 29	U.S. claims amended to remove multiple dependencies
		present in PCT claims
116 - 118	30 - 32	direct correspondence
119	33 - 34	U.S. claims amended to remove multiple dependencies
		present in PCT claims

III. All the claims in the US application sufficiently correspond to the patentable claims in the corresponding PCT application.

Signature	Date September 28, 2010
Name (Print/Type) Douglas R. Hanscom	Registration Number 26600

JAN McLIN CLAYBERG
PATENT AND TECHNICAL TRANSLATION

JAN McLIN CLAYBERG*
OLAF BEXHOEFT**

CERTIFIED BY AMERICAN TRANSLATORS ASSOCIATION
*GERMAN AND FRENCH TO ENGLISH
**ENGLISH TO GERMAN

5318 LITTLE FALLS ROAD
ARLINGTON, VIRGINIA 22207

TELEPHONE (703) 533-0333
FACSIMILE (703) 533-0334
JANCLAYBERG@YAHOO.COM

June 17, 2007

DECLARATION

The undersigned, Olaf Bexhoeft, hereby states that he is well acquainted with both the English and German languages and that the attached is a true translation to the best of his knowledge and ability of the German text of PCT/EP2005/056920, filed 12/19/2005, and published as WO 2006/067118 A1 on 06/29/2006.

The undersigned further declares that the above statement is true; and further, that this statement was made with the knowledge that willful false statements and the like so made are punishable by fine or imprisonment, or both, under Section 1001 of Title 18 of the United States Code and that such willful false statements may jeopardize the validity of the application or document or any patent resulting therefrom.

Olaf Bexhoeft

Olaf Bexhoeft

Translation of the pertinent portions of a Notification Advising the Forwarding of the International Search Report and the Written Notification from the International Searching Authority or the Declaration, mailed 05/02/2006

This International Search Report comprises a total of 3 pages. Copies of the documents cited in this report are also enclosed.

1. Basis of the Report

a. Regarding the language, the international search is based on

x the international application in the language in which it was filed.

4. Regarding the title of the invention:

X the wording filed by Applicant is approved.

5. Regarding the abstract:

X the wording filed by Applicant is approved.

6. Fig. 1, as proposed by Applicant, is to be published with the abstract.

WRITTEN NOTIFICATION FROM THE INTERNATIONAL SEARCH AUTHORITY

1. This Notification contains information regarding the following points:

x Field No. I Basis of the Notification

x Field No. V Reasoned Determination in accordance with Rule 43bis. 1 a) i)

Field No. I Basis of the Notification

1. Regarding the language, the Notification is based on

x the international application in the language in which it was filed.

Field No. V Reasoned Determination in accordance with Rule 43bis. 1 a) i)

1. Determination

Novelty	Yes:	Claims 1 to 43
	No:	Claims
Inventive Activities	Yes:	Claims 1 to 43
	No:	Claims
Commercial Applicability	Yes:	Claims 1 to 43
	No:	Claims

2. Documents and Explanations:

see the attached sheet

ATTACHED SHEET

Re.: Item V

1. Reference is made to the following documents:

D1: DE 102 51 573 A1, mentioned in the application
D2: DE 100 01 211 A1, mentioned in the application

2. Document D1 is considered to be the closest prior art. It discloses (the references in parentheses relate to this document):

- a device for rapid image data transmission in connection with printing presses, wherein memory units are connected by means of a bus system with a computer designed as a data manager for intermediate buffering of image data received from an RIP (raster image processor), as well as with the illustrating device for illustration,

- wherein each illustrating unit communicates with respectively one of the memory units and reads out the image data directly from the respective memory unit,

from which the subject of independent claim 1 differs in that

- a network (09) for controlling and/or monitoring the printing press is provided, that a network (07) for communicating data to be processed in the pre-printing stage is provided in a pre-printing stage which makes image data (2) available, wherein the network (19) for transmitting at least image data (02) to at

least one illustrating device (13) and the network (09) for controlling and/or monitoring the printing press and the network (07) for communicating data to be processed in the pre-printing stage are connected to the same signal line and/or transmission path.

2.1 Therefore the subject of claim 1 is novel (Article 33(2) PCT). The object to be attained by means of the present invention can be seen to lie in producing a printing press containing a network for transmitting image data to at least one illustrating device, and a communications system with a network for controlling and/or monitoring several sections.

2.2 For the following reasons, the attainment of the object suggested in claim 1 of the instant application is based on inventive activities for the following reasons (Article 33(3) PCT):

One skilled in the art does not receive any suggestion from D1 as the closest prior art for improving the device for rapid image data transmission recited there in such a way that printed images are produced at respectively one printing image location. Correspondingly, D1 does also not contain any suggestion as to how such an improvement could look and how the raster-forming process could be respectively performed faster and meeting the requirements better.

D2 describes a method for the generation of raster data for illustrating units of a printing press, wherein the raw image data are split into a plurality of partial images each corresponding to an ink color, the partial images are issued to a plurality of raster image processors corresponding to the number of the colors to be printed, and the partial images are simultaneously processed into raster data by the raster processors in order to be issued to one of the illustrating units. However, D2 does not contain any suggestion as to which printed image can be formed at which printing image location and how this forming can be postponed until shortly prior to the printing command.

Therefore claim 1 is inventive.

2.3 Independent claims 32 [sic] corresponds to claim 1 and is novel and inventive.

2.4 The other claims are dependent claims and therefore also novel and inventive.

Claims

1. A communications system with a network (19) for transmitting at least image data (02) to at least one illustrating device (13), wherein the illustrating device (13) illustrates a printing image location in a printing press, characterized in that a network (09) for controlling and/or monitoring the printing press is provided, that a network (07) for communicating data to be processed in the pre-printing stage is provided in a pre-printing stage which makes image data (2) available, wherein the network (19) for transmitting at least image data (02) to at least one illustrating device (13) and the network (09) for controlling and/or monitoring the printing press and the network (07) for communicating data to be processed in the pre-printing stage are connected to the same signal line and/or transmission path.

2. A communications system with a network (19) for transmitting at least image data (02) to at least one illustrating device (13), wherein the illustrating device (13) illustrates a printing image location in a printing press, characterized in that a network (09) for controlling and/or monitoring the printing press is provided, that a network (07) for communicating data to be processed in the pre-printing stage is provided in a pre-printing stage which makes image data (2) available, wherein at least one signal line and/or transmission path assigned to the network (19) for transmitting at least image data (02) to at least one illustrating device (13), and/or the network (09) for controlling and/or monitoring the printing press, and/or the

network (07) for communicating data to be processed in the pre-printing stage, is mutually utilized by at least two of these networks (07, 09, 19).

3. A communications system with a network (19) for transmitting at least image data (02) to at least one illustrating device (13), wherein the illustrating device (13) illustrates a printing image location in a printing press, characterized in that a network (09) for controlling and/or monitoring the printing press is provided, that a network (07) for communicating data to be processed in the pre-printing stage is provided in a pre-printing stage which makes image data (2) available, wherein the network (19) for transmitting at least image data (02) to at least one illustrating device (13), the network (07) for communicating data to be processed in the pre-printing stage and the network (09) for controlling and/or monitoring the printing press are respectively identically embodied in respect to their data transmitting properties.

4. The communications system in accordance with claim 3, characterized in that the network (19) for transmitting at least image data (02) to at least one illustrating device (13), the network (07) for communicating data to be processed in the pre-printing stage and the network (09) for controlling and/or monitoring the printing press are respectively embodied as an ethernet network.

5. The communications system in accordance with claim 3, characterized in that the network (19) for transmitting at least image data (02) to at least one illustrating device (13) and the

network (09) for controlling and/or monitoring the printing press and the network (07) for communicating data to be processed in the pre-printing stage are connected to the same signal line and/or transmission path.

6. The communications system in accordance with claim 1, 2 or 3, characterized in that the network (19) for transmitting at least image data (02) to at least one illustrating device (13) and/or the network (09) for controlling and/or monitoring the printing press and/or the network (07) for communicating data to be processed in the pre-printing stage are connected with each other respectively via a relay location which provides relays between these networks (07, 09, 19).

7. The communications system in accordance with claim 6, characterized in that the relay location which provides relays between the networks (07, 09, 19) is designed as a proxy or as a controller.

8. The communications system in accordance with claim 1 or 2, characterized in that at least the network (19) for transmitting at least image data (02) to at least one illustrating device (13) is designed as an ethernet network.

9. The communications system in accordance with claim 1or 2, characterized in that the network (07) for communicating data to be processed in the pre-printing stage is designed as an ethernet network.

10. The communications system in accordance with claim 1 or 2, characterized in that the network (19) for transmitting at least image data (02) to at least one illustrating device (13), the network (07) for communicating data to be processed in the pre-printing stage and the network (09) for controlling and/or monitoring the printing press are respectively designed as an ethernet network.

11. The communications system in accordance with claim 1 or 2, characterized in that the network (09) for controlling and/or monitoring the printing press is designed as a SERCOS field bus or as a PROFIBUS field bus.

12. The communications system in accordance with claim 1 or 2, characterized in that the network (09) for controlling and/or monitoring the printing press is designed as a SERCOS III field bus or as a PROFIBUS field bus respectively based on an ethernet.

13. The communications system in accordance with claim 1, 2 or 3, characterized in that the network (09) for controlling and/or monitoring the printing press is designed as a real-time-capable field bus.

14. The communications system in accordance with claim 1, 2 or 3, characterized in that the printing image location is respectively embodied on a forme cylinder (12).

15. The communications system in accordance with claim 14, characterized in that at least the drive unit (58) of each forme

cylinder (12) and/or transfer cylinder and/or printing cylinder and/or cutting cylinder provided in the printing press is respectively connected to the network (09) for controlling and/or monitoring the printing press.

16. The communications system in accordance with claim 1, 2 or 3, characterized in that at least one position-regulated drive unit (58) is connected to the network (09) for controlling and/or monitoring the printing press.

17. The communications system in accordance with claim 1 or 2, characterized in that at least the network (09) for controlling and/or monitoring the printing press is connected with a control console (08), which is a part of the printing press.

18. The communications system in accordance with claim 1 or 2, characterized in that the network (07) for communicating data to be processed in the pre-printing stage is connected with a control console (08), which is a part of the printing press.

19. The communications system in accordance with claim 1 or 2, characterized in that the network (19) for transmitting at least image data (02) to at least one illustrating device (13), the network (07) for communicating data to be processed in the pre-printing stage and the network (09) for controlling and/or monitoring the printing press are respectively connected with a control console (08), which is a part of the printing press.

20. The communications system in accordance with claim 1 or 2, characterized in that the network (07) for communicating

data to be processed in the pre-printing stage is connected with a computer (01), wherein at least this computer (01) contains arrangement information regarding at least one printing image location, or placement information regarding at least one printing forme, for respectively positioning the printing image location or the printing forme in the printing press.

21. The communications system in accordance with claim 17, characterized in that the control console (08) contains arrangement information regarding at least one printing image location, or placement information regarding at least one printing forme, for respectively positioning the printing image location or the printing forme in the printing press.

22. The communications system in accordance with claim 19 or 20, characterized in that the computer (01) in the pre-printing stage and/or the control console (08) transmits the arrangement information regarding at least one printing image location, or placement information regarding at least one printing forme, to a control device (14) of an illustrating device (13) arranged in the printing press.

23. The communications system in accordance with claim 19 or 20, characterized in that the computer (01) in the pre-printing stage makes the same image data (02) available to each illustrating device (13) arranged in the printing press.

24. The communications system in accordance with claim 22, characterized in that each illustrating device (13) arranged in the printing press selectively takes the image data (02) intended

for it respectively via an interface (26) assigned to the respective illustrating device (13) from the network (19) for transmitting at least image data (02) on the basis of the arrangement information regarding at least one printing image location, or placement information regarding at least one printing forme.

25. The communications system in accordance with claim 19 or 20, characterized in that each illustrating device (13) arranged in the printing press selectively requests the image data (02) intended for it respectively via an interface (26) assigned to the respective illustrating device (13) from the network (19) for transmitting at least image data (02) on the basis of the arrangement information regarding at least one printing image location, or placement information regarding at least one printing forme.

26. The communications system in accordance with claim 24, characterized in that each one of the illustrating devices (13) provided in the printing press respectively calls up the image data (02) intended for it from a file server (24) connected with the computer (01) in the pre-printing stage and/or with the control console (08).

27. The communications system in accordance with claim 1, 2 or 3, characterized in that image data (02) transmitted via the network (19) for transmitting at least image data (02) receive all information regarding color separations for a page to be produced by means of the printing press.

28. The communications system in accordance with claim 1, 2 or 3, characterized in that the image data (02) transmitted via the network (19) for transmitting at least image data (02) have not been provided with a raster.

29. The communications system in accordance with claim 1, 2 or 3, characterized in that the network (09) for controlling and/or monitoring the printing press is provided in a printing press having several sections (71, 72).

30. The communications system in accordance with claim 29, characterized in that at least two sections (71, 72) respectively have a section control device (23, 63), wherein the section control devices (23, 63) are respectively connected to the network (09) for controlling and/or monitoring the printing press, wherein the section control devices (23, 63) connected to this network (09) control and/or monitor their respective section (71, 72).

31. The communications system in accordance with claim 30, characterized in that the network (09) for controlling and/or monitoring the printing press has the same data transmission properties for each section (71, 72).

32. A communications system having a network (09) for the control and/or monitoring a printing press with several sections (71, 72), wherein at least two sections (71, 72) have a respective section control device (23, 63), wherein the section control devices (23, 63) are each connected to this network (09), wherein the section control devices (23, 63) connected to the network (09) control and/or monitor their respective section (71, 72),

characterized in that the network (09) in each of the sections (71, 72) has the same data transmission properties.

33. The communications system in accordance with claim 30 or 32, characterized in that the section control devices (23, 63) connected to the network (09) control and/or monitor their respective sections (71, 72) at least in a higher order manner.

34. The communications system in accordance with claim 30 or 32, characterized in that the section control devices (23, 63) connected to the network (09) are connected via at least one signal line (53) with at least one control console (08, 60), which is part of the printing press.

35. The communications system in accordance with claim 30 or 32, characterized in that signal line (53) connecting the section control devices (23, 63) with at least one control console (08, 50) are designed exactly the same in regard to data technology as the network (09) within one of the sections (71, 72).

36. The communications system in accordance with claim 30 or 32, characterized in that the network (09) for control and/or monitoring the printing press having several sections (71, 72) is designed as an ethernet network.

37. The communications system in accordance with claim 30 or 32, characterized in that the network (09) for control and/or monitoring the printing press having several sections (71, 72) is designed as a real-time-capable field bus.

38. The communications system in accordance with claim 30 or 32, characterized in that the network (09) for control and/or monitoring the printing press having several sections (71, 72) is designed as a respectively ethernet-based SERCOS III field bus or PROFINET field bus.

39. The communications system in accordance with claim 30 or 32, characterized in that a network (19) for transmitting at least image data (02) to at least one illustrating device (13) is provided, wherein the illustrating device (13) illustrates a printing image location in one of the sections (71, 72).

40. The communications system in accordance with claim 30 or 32, characterized in that, in a pre-printing stage which makes the image data (02) available, a network (07) for communicating data to be processed in the pre-printing stage is provided.

41. The communications system in accordance with claim 39 and 40, characterized in that the network (19) for transmitting at least image data (02), the network (07) for communicating data to be processed in the pre-printing stage and the network (09) for controlling and/or monitoring the printing press are respectively connected to the same signal line and/or transmission path.

42. The communications system in accordance with claim 39 and 40, characterized in that at least one signal line and/or transmission path assigned to the network (19) for transmitting at least image data (02), and/or the network (07) for communicating data to be processed in the pre-printing stage, and/or to the network (09) for controlling and/or monitoring the printing press,

is mutually utilized by at least two of these networks (07, 09, 19).

43. The communications system in accordance with claim 39 and 40, characterized in that the network (19) for transmitting at least image data (02), the network (07) for communicating data to be processed in the pre-printing stage and the network (09) for controlling and/or monitoring the printing press are respectively identically embodied in respect to their data transmitting properties.

UNITED STATES PATENT AND TRADEMARK OFFICE

Commissioner for Patents
United States Patent and Trademark Office
P.O. Box 1450
Alexandria, VA 22313-1450
www.uspto.gov

MAIL

NOV 26 2010

DIRECTOR'S OFFICE
TECHNOLOGY CENTER 2600

JONES, TULLAR & COOPER, P.C.
P.O. BOX 2266 EADS STATION
ARLINGTON VA 22202

In re Application of BIRKENFELD, ANDREAS STEFAN, et al. Application No. 11/793,502 Filed: June 20, 2007 Attorney Docket No. **W1.2654 PCT-US**	DECISION ON REQUEST TO PARTICIPATE IN PATENT PROSECUTION HIGHWAY PROGRAM AND PETITION TO MAKE SPECIAL UNDER 37 CFR 1.102(d)

This is a decision on the request to participate in the PCT Patent Prosecution Highway (PPH) pilot program and the petition under 37 CFR 1.102(d), filed September 28, 2010 to make the above-identified application special.

The request and petition are **GRANTED**.

A grantable request to participate in the PCT-PPH pilot program and petition to make special require:

(1) The U.S. application be (a) a national stage entry of the corresponding PCT application, or (b) a national stage entry of another PCT application which claims priority to the corresponding PCT application, or (c) a national stage application that claims domestic/foreign priority to the corresponding PCT application, (d) a national application which forms the basis for the priority claim in the corresponding PCT application, or (e) a continuation application of the U.S. application which satisfies one of the above (a) to (d) scenarios.
(2) A copy of the latest international work product (WO/ISA, WO/IPEA, or IPER) in the corresponding PCT application(s) which indicates at least one claim in the PCT application has novelty, inventive step, and industrial applicability.
(3) A copy of all claims which were indicated as having novelty, inventive step and industrial applicability in the corresponding PCT application(s).
(4) English translations of the documents in (2) and (3) (if the documents are not in the English language).
(5) All the claims in the U.S. application must sufficiently correspond or be amended to sufficiently correspond to the claims which were indicated as having novelty, inventive step, and industrial applicability in the corresponding PCT application(s).
(6) Examination of the U.S. application has not begun;
(7) An information disclosure statement listing the documents cited in the international work products (ISR, WO/ISA. WO/IPEA, IPER) of the corresponding PCT application(s) and

(8) The petition fee under 37 CFR 1.17(h).

The request to participate in the PCT-PPH pilot program and petition comply with the above requirements. Accordingly, the above-identified application has been accorded "special" status.

Telephone inquiries concerning this decision should be directed to Ken Wieder at 571-272-2986.

All other inquiries concerning the examination or status of the application should be directed to Patent Application Information Retrieval (PAIR) system.

The application is being forwarded to the examiner for action on the merits commensurate with this decision.

/Kenneth A. Wieder/

Kenneth A. Wieder
Quality Assurance Specialist
Technology Center 2600
Communications

SPE RESPONSE FOR CERTIFICATE OF CORRECTION

Paper No.: _____

DATE : May 2, 2011

TO SPE OF : ART UNIT 3745

SUBJECT : Request for Certificate of Correction for Appl. No. 11/793543 patent No.:7788915 B2
C of C mailroom date:--04-28-11

Please respond to this request for a certificate of correction within 7 days.

Please review the requested changes/corrections as shown in the **COCIN** document(s) in the IFW application image. No new matter should be introduced, nor should the scope or meaning of the claims be changed.

Please complete the response (see below) and forward the completed response to scanning using document code **COCX**.

Magdalene Talley

Certificates of Correction Branch

571-272- 0423

Thank You For Your Assistance

The request for issuing the above-identified correction(s) is hereby:

Note your decision on the appropriate box.

- ☒ **Approved** — **All** changes apply.
- ☐ **Approved in Part** — Specify below which changes **do not** apply.
- ☐ **Denied** — State the reasons for denial below.

Comments: _____

/Edward Look/ — **SPE**

3745 — **Art Unit**

PTO/SB/32PCT-EP (08-10)
Approved for use through 03/31/2012. OMB 0651-0058
U.S. Patent and Trademark Office, U.S. DEPARTMENT OF COMMERCE
Under the Paperwork Reduction Act of 1995, no persons are required to respond to a collection of information unless it displays a valid OMB control number.

REQUEST FOR PARTICIPATION IN THE PATENT COOPERATION TREATY - PATENT PROSECUTION HIGHWAY (PCT-PPH) PILOT PROGRAM BETWEEN THE EUROPEAN PATENT OFFICE (EPO) AND THE USPTO

Application No:	11/793,627	Filing date:	June 20, 2007
First Named Inventor:	Andreas Stefan BIRKENFELD		
Title of the Invention:	DEVICE FOR PRODUCING A PRINTED IMAGE AT AT LEAST ONE PRINTED IMAGE LOCATION		

THIS REQUEST FOR PARTICIPATION IN THE PCT-PPH PILOT PROGRAM ALONG WITH THE REQUIRED DOCUMENTS MUST BE SUBMITTED VIA EFS-WEB. INFORMATION REGARDING EFS-WEB IS AVAILABLE AT HTTP://WWW.USPTO.GOV/EBC/EFS_HELP.HTML

APPLICANT HEREBY REQUESTS PARTICIPATION IN THE PCT-PPH PROGRAM AND PETITIONS TO MAKE THE ABOVE-IDENTIFIED APPLICATION SPECIAL UNDER THE PCT-PPH PROGRAM.

The above-identified application is (1) a national stage entry of the corresponding PCT application, or (2) a national stage entry of another PCT application which claims priority to the corresponding PCT application, or (3) a national application that claims domestic/ foreign priority to the corresponding PCT application, or (4) a national application which forms the basis for the priority claim in the corresponding PCT application, or (5) a continuing application of a U.S. application that satisfies one of (1) to (4) above, or (6) a U.S. application that claims domestic benefit to a U.S. provisional application which forms the basis for the priority claim in the corresponding PCT application.

The corresponding PCT application number(s) is/are: PCT/EP2005/056918

The international date of the corresponding PCT application(s) is/are: December 19, 2005

I. List of Required Documents:

a. **A copy of the latest international work product (WO/ISA, WO/IPEA, or IPER) in the above-identified corresponding PCT application(s)**

☐ Is attached

☑ Is not attached because the document is already in the U.S. application.

b. **A copy of all claims which were indicated as having novelty, inventive step and industrial applicability in the above-identified corresponding PCT application(s).**

☐ Is attached.

☑ Is not attached because the document is already in the U.S. application.

c. **English translations of the documents in a. and b. above are attached (if the documents are not in the English language). A statement that the English translation is accurate is attached for the document in b. above.**

This collection of information is required by 35 U.S.C. 119, 37 CFR 1.55, and 37 CFR 1.102(d). The information is required to obtain or retain a benefit by the public, which is to be filed by the USPTO to process an application. Confidentiality is governed by 35 U.S.C. 122 and 37 CFR 1.11 and 1.14. This collection is estimated to take 2 hours to complete, including gathering, preparing, and submitting the completed application form to the USPTO. Time will vary depending upon the individual case. Any comments on the amount of time you require to complete this form and/or suggestions for reducing this burden should be sent to the Chief Information Officer, U.S. Patent and Trademark Office, U.S. Department of Commerce, P.O. Box 1450, Alexandria, VA 22313-1450. DO NOT SEND FEES OR COMPLETED FORMS TO THIS ADDRESS.

Under the Paperwork Reduction Act of 1995, no persons are required to respond to a collection of information unless it displays a valid OMB control number.

REQUEST FOR PARTICIPATION IN THE PCT-PPH PILOT PROGRAM BETWEEN THE EPO AND THE USPTO

(continued)

Application No.:	11/793,627
First Named Inventor:	Andreas Stefan BIRKENFELD

II. **(1) An information disclosure statement listing the documents cited in the international work products (ISR, WO/ISA, WO/IPEA, IPER) of the corresponding PCT application.**

☐ Is attached

☑ Has already been filed in the above-identified U.S. application on June 20, 2007

(2) Copies of all documents (except) for U.S. patents or U.S. patent application publications)

☐ Are attached.

☑ Have already been filed in the above-identified U.S. application on June 20, 2007

II. Claims Correspondence Table:

Claims in US Application	Patentable Claims in the corresponding PCT Application	Explanation regarding the correspondence
114 - 138	1 - 25	direct correspondence
139	26	U.S. claim amended to remove multiple dependency
		present in PCT claim
140 - 159	27 - 46	direct correspondence
160	47	U.S. claim amended to remove multiple dependency
		present in PCT claim
161 - 169	48 - 56	direct correspondence

III. All the claims in the US application sufficiently correspond to the patentable claims in the corresponding PCT application.

Signature	Date September 28, 2010
Name (Print/Type) Douglas R. Hanscom	Registration Number 26600

JAN McLIN CLAYBERG
PATENT AND TECHNICAL TRANSLATION

JAN McLIN CLAYBERG*
OLAF BEXHOEFT**

CERTIFIED BY AMERICAN TRANSLATORS ASSOCIATION
*GERMAN AND FRENCH TO ENGLISH
**ENGLISH TO GERMAN

5318 LITTLE FALLS ROAD
ARLINGTON, VIRGINIA 22207

TELEPHONE (703) 533-0333
FACSIMILE (703) 533-0334
JANCLAYBERG@YAHOO.COM

June 16, 2007

DECLARATION

The undersigned, Olaf Bexhoeft, hereby states that he is well acquainted with both the English and German languages and that the attached is a true translation to the best of his knowledge and ability of the German text of PCT/EP2005/056918, filed 12/19/2005, and published as WO 2006/067117 A1 on 06/29/2006.

The undersigned further declares that the above statement is true; and further, that this statement was made with the knowledge that willful false statements and the like so made are punishable by fine or imprisonment, or both, under Section 1001 of Title 18 of the United States Code and that such willful false statements may jeopardize the validity of the application or document or any patent resulting therefrom.

Olaf Bexhoeft

Translation of the pertinent portions of a **Notification of the Transmittal of the International Search Report and the Written Opinion of the International Search Authority or the Declaration (PCT Rule 44.1)**, mailed on 8 May 2006

This International Search Report has been prepared by this International Searching Authority and is transmitted to the applicant according to Article 18. The report comprises a total of 3 pages. Copies of each prior art document cited in this report are also enclosed.

1. **Basis of the Report**
   With regard to **language**, the international search was carried out on the basis of the international application in the language in which it was filed

4. With regard to the **Title of the Invention**:

   The wording has been determined as submitted by the applicant.

5. With regard to the **Abstract**:

   The wording has been determined as submitted by the applicant.

6. With regard to the **Drawings**:

   Fig. 1 is to be published with the abstract as selected by this Authority, as the applicant failed to suggest a figure.

WRITTEN OPINION OF THE INTERNATIONAL SEARCHING AUTHORITY

1. This opinion contains indications relating to the following items:

Box I Basis of the opinion

Box V Reasoned statement under Rule 43bis.1(a)(i) with regard to novelty, inventive step or industrial applicability; citations and explanations supporting such statement

Box No. I Basis of the Opinion

1. With regard to the **language**, this opinion has been established on the basis of the international application in the language in which it was filed

Box No. V Reasoned statement under Rule 43bis.1(a)(i) with regard to novelty, inventive step and industrial applicability; citations and explanations supporting such statement

1. Statement

Novelty	Yes: Claims 1-56 No: Claims
Inventive Step	Yes: Claims 1-56 No: Claims
Industrial Applicability	Yes: Claims 1-56 No: Claims:

2. Citations and Explanations
See attached sheet

WRITTEN OPINION OF THE INTERNATIONAL SEARCHING AUTHORITY (SUPPLEMENTARY TEXT)

Re Point V

1. Reference is made to the following documents:
   D1: DE 100 01 211 A1 (HEIDELBERGER DRUCKMASCHINEN AG) 26 July 2001 (07/26/2001), cited in the application
   D2: DE 102 51 573 A1 (HEIDELBERGER DRUCKMASCHINEN AG) 12 June 2003 (06/12/2003)

2. Document D1 is considered to be the closest prior art. It discloses (the references within parentheses relate to said document):

   a device for producing a printing image at at least one printing image location, having

   * a printing press with at least one illustrating device (13), which forms at least one printed image at several printing image locations,

   * wherein the respective printed images are part of the same page of a printed product to be produced by the printing press,

   * wherein, prior to the formation of its printed images, the page of the printed product exists in the form of a data file containing image data (02),

   * wherein the data file contains image data (02) of all printed images of the page of the printed product,

   * wherein a raster image processor (03) is assigned to each printing image location,

   * wherein each raster image processor (03) converts only image data (02) of the printed image of the page of the printed product assigned to the respective printing image location into raster data (04), characterized in that

   from which the subject matter of independent claim 1 differs in that:

   * a network (19) for the electronic communication of at least image data (02) is provided,

   * wherein each raster image processor (03) is connected to this network (19) by means of an interface (26) which receives image data (02),

* wherein this network (19) makes the data file containing image data (02) regarding all printed images of the page of the printed product available at the interface (26) of each raster image processor (03).

Therefore, the subject matter of claim 1 is novel (PCT Article 33(2)).

2.2 The solution to this problem proposed in claim 1 of the present application is based upon an inventive step for the following reasons (PCT Article 33(3)):

The distinguishing feature of the invention provides the following effects:

* a rigid assignment of defined image data to a defined printing image location is avoided,

* as a result, the decision regarding which printed image will be formed at which printing image location can be deferred until shortly before the execution of the printing command,

* and each raster image processor therefore provides a raster for only a selected portion of the image data.

2.3 The problem addressed by the present invention can therefore be considered that of providing a device for forming a printed image at at least one printing image location, wherein the raster-forming process can be performed more rapidly and more in line with requirements.

2.4 However, Document D1 considered alone would not lead one skilled in the art to the solution to the problem, since said document does not provide any indication for connecting each raster image processor to the network (19) by means of an interface which receives image data, in such a way that the network (19) would make the data file with image data (02) regarding all printed images of the page of the printed product available at the interface (26) of each raster image processor (03).

Moreover, a combination of D1 with D2 would not lead one skilled in the art to the invention, because the distinguishing feature is not described in D2.

Therefore, claim 1 is inventive.

2.5 Claims 2-43 are dependent upon claim 1 and therefore also meet the requirements of the PCT in respect of novelty and inventive step.

Claims

1. A device for producing a printing image at at least one printing image location, having a printing press with at least one illustrating device (03), which respectively forms at least one printed image at several printing image locations, wherein the respective printed images are part of the same page of a printed product to be produced by the printing press wherein, prior to the formation of its printed images, the page of the printed product exists in the form of a data set containing image data (02), wherein the data set contains image data (02) of all printed images of the page of the printed product, wherein a raster image processor (03) is assigned to each printing image location, wherein each raster image processor (03) only converts image data (02) of the printed image of the page of printed products assigned to the respective printing image location into raster data (04), characterized in that a network (19) for electronic communication of at least image data (02) is provided, wherein each raster image processor (03) is connected to this network (19) by means of an interface (26) which receives image data (02), wherein this network (09) makes the data set containing image data (02) regarding all printed images of the page of the printed product available at the interface (26) of each raster image processor (03).

2. The device in accordance with claim 1, characterized in that the printing image location is arranged on a forme cylinder (02).

3. The device in accordance with claim 1, characterized in that the printing press has a plurality of forme cylinders (12), which are arranged following each other in the transport direction of a material being imprinted in the printing press.

4. The device in accordance with claim 3, characterized in that respectively one illustrating device (13) is assigned to several of the forme cylinders (12).

5. The device in accordance with claim 4, characterized in that each one of the illustrating devices (13) forms at least one printed image at the respective printing image location of the respective forme cylinder (12).

6. The device in accordance with claim 1, characterized in that the respective printed images imprint at least a portion of the same page of the printed product to be produced by means of the printing press.

7. The device in accordance with claim 1, characterized in that the interface (26) of each raster image processor (03) selectively takes the portion of the image data (02) to be provided with a raster from the network (19) for electronic communication of at least image data (02) on the basis of provided arrangement information or placement information relating to the printing image location.

8. The device in accordance with claim 1, characterized in that each illustrating device (13) and the associated interface (26), together with a control device (14) controlling the

illustrating device (13), are respectively arranged in the printing press.

9. The device in accordance with claim 3, characterized in that an illustrating device (13) with a control device (14) having a raster image processor (03) is provided for each forme cylinder (12) of the printing press.

10. The device in accordance with claim 3, characterized in that each forme cylinder (12) respectively has a plurality of printing image locations in its axial direction and/or in its circumferential direction.

11. The device in accordance with claim 1, characterized in that the image data (02) are provided in the form of a TIFF data set, in the form of a postscript data set, or in the form of a data set in a pdf format.

12. The device in accordance with claim 1, characterized in that the network (19) for electronic communication of at least image data (02) is designed as a local network (19).

13. The device in accordance with claim 1, characterized in that the network (19) for electronic communication of at least image data (02) is designed as a public network (19).

14. The device in accordance with claim 1, characterized in that the interface (26) receives image data (02) which have been transmitted over lines and/or in a wireless manner.

15. The device in accordance with claim 1, characterized in that the interface (26) receives the image data (02) from a computer of a pre-printing stage.

16. The device in accordance with claim 1, characterized in that a memory device (06) is provided, wherein the memory device (06) stores image data (02) received from the interface (26) prior to or after their conversion in the raster image processor (03).

17. The device in accordance with claim 8, characterized in that the control device (14) calibrates raster points determined by the raster image processor (03) as a function of a location intended for the printing image location in the printing press.

18. The device in accordance with claim 8, characterized in that the control device (14) calibrates raster points determined by the raster image processor (03) as a function of a colored printing ink to be applied to the printing image location and/or of a material to be imprinted with a printed image formed at the printing image location.

19. The device in accordance with claim 8, characterized in that the control device (14) calibrates raster points determined by the raster image processor (03) as a function of a signal from an inspection system, which is arranged in the printing press and monitors the printing process.

20. The device in accordance with claim 8, characterized in that the control device (14) is connected with a computer (08) for control and/or monitoring of the printing press.

21. The device in accordance with claim 20, characterized in that the computer 08) for control and/or monitoring of the printing press is connected to a network (09) for controlling and/or monitoring the printing press.

22. The device in accordance with claim 20, characterized in that the computer (08) for control and/or monitoring of the printing press is embodied as a control console (08), which is a part of the printing press, or is at least integrated into a control console (08), which is a part of the printing press.

23. The device in accordance with claim 2, characterized in that an illustrating position of the illustrating device (13) selected at the circumference of the forme cylinder (12) is selected as a function of an angular position of this forme cylinder (12).

24. The device in accordance with claim 2, characterized in that an illustrating speed of the illustrating device (13) oriented in the circumferential direction of the forme cylinder (12) is selected as a function of a speed of rotation of this forme cylinder (12).

25. The device in accordance with claim 1, characterized in that the raster image processor (03) is realized in an FPGA (field-programmable gate array).

26. The device in accordance with claim 1 or 8, characterized in that the control device (14), the raster image processor (03) and/or the interface (26) are designed on the basis of software technology.

27. The device in accordance with claim 1, characterized in that the illustrating device (13) forms the printed image at the printing image location on a printing forme.

28. The device in accordance with claim 27, characterized in that the printing forme is suitable for a wet offset printing process or for a dry offset printing process operated without a wetting agent.

29. The device in accordance with claim 27, characterized in that the printing forme can be repeatedly illustrated.

30. The device in accordance with claim 27, characterized in that a printing forme has exactly one printing image location to be illustrated by an illustrating device (13).

31. The device in accordance with claim 1, characterized in that the printing press has at least two printing image locations, which are to be illustrated by one of the illustrating devices (13) wherein, in one operating stage of the printing press, one of the illustrating devices (13) illustrates at least one printing image location, while the other printing image location participates in an ongoing printing process of this printing press.

32. The device in accordance with claim 1, characterized in that the printing press directly or indirectly imprints the material to be imprinted, which is transported by the printing press.

33. The device in accordance with claim 2, characterized in that a drive mechanism control (22) is provided for controlling a drive mechanism of the at least one forme cylinder (12).

34. The device in accordance with claim 33, characterized in that the drive mechanism control (22) conducts a signal corresponding to the angular position of the forme cylinder (12) to the control device (14) of the illustrating device (13) which illustrates this cylinder (12).

35. The device in accordance with claim 2, characterized in that in its axial direction the at least one forme cylinder (12) has several sections which follow each other, wherein each section has at least one printing image location.

36. The device in accordance with claim 35, characterized in that several printing image locations are provided in the circumferential direction on each section of the forme cylinder (12).

37. The device in accordance with claim 35, characterized in that two printing image locations are provided in the circumferential direction on each section of the forme cylinder (12).

38. The device in accordance with claim 35, characterized in that respectively one illustrating device (13) is assigned to different sections of the same forme cylinder (12).

39. The device in accordance with claim 35, characterized in that an illustrating device (13) is assigned to each section.

40. The device in accordance with claim 35, characterized in that the same illustrating device (13) illustrates all printing image locations to be illustrated on the same forme cylinder (12) in a sequential or parallel operating process.

41. The device in accordance with claim 1, characterized in that the printing press is designed as a web-fed rotary printing press or as a sheet-fed rotary printing press.

42. The device in accordance with claim 3, characterized in that the forme cylinders (12) do not have a positive or mechanical drive connection and are driven independently of each other.

43. The device in accordance with claim 3, characterized in that the forme cylinders (12) can be coupled separately and independently from each other into an ongoing printing process, or can be uncoupled separately and independently from each other from an ongoing printing process.

44. The device in accordance with claim 1, characterized in that a network (07) for communicating data to be processed in the pre-printing stage is provided in the pre-printing stage.

45. The device in accordance with claim 44, characterized in that the computer (01) in the pre-printing stage is connected to the network (07) for communicating data to be processed in the pre-printing stage.

46. The device in accordance with claim 44, characterized in that the computer (08) for control and/or monitoring of the printing press is connected with the network (07) for communicating data to be processed in the pre-printing stage provided in the pre-printing stage.

47. The device in accordance with claim 1, 21 or 44, characterized in that a signal line and/or transmission path, which is assigned to the network (19) for electronic communication of at least image data (02), and/or the network (09) for controlling and/or monitoring the printing press, and/or the network (07) for communicating data to be processed in the pre-printing stage, can be commonly used by at least two of these networks (07, 09, 19).

48. The device in accordance with claim 21, characterized in that a section control device (23) is connected with the network (09) for controlling and/or monitoring the printing press.

49. The device in accordance with claim 48, characterized in that the section control device (23) controls at least one assignment of image printing locations to be illustrated to the respective forme cylinder (12) within a section having a plurality of forme cylinders (12).

50. The device in accordance with claim 3, characterized in that each forme cylinder (12) having a printing image location to be illustrated has a reference shaft position (Phi, Phi a, Phi b), which is defined in respect to a reference shaft defined in the printing press, wherein the illustrating device (13) assigned to the printing image location of the forme cylinder (12) to be illustrated illustrates the printing image location as a function of the reference shaft position (Phi, Phi a, Phi b) of this forme cylinder (12).

51. The device in accordance with claim 21, characterized in that a folding apparatus (08) is included in the network (09) for controlling and/or monitoring the printing press, wherein at least one of the illustrating device (13) provided in the printing press illustrates at least one printing image location to be illustrated as a function of a cutting register of the folding apparatus (81).

52. The device in accordance with claim 1, characterized in that the illustrating device (13) is designed as a single laser system or as a laser array consisting of several lasers.

53. The device in accordance with claim 1, characterized in that the illustrating device (13) is embodied as an inkjet system.

54. The device in accordance with claim 1, characterized in that the illustrating device (13) forms a latent printed image on an image substrate at the printing image location.

55. The device in accordance with claim 1, characterized in that the illustrating device (13) transfers colored printing ink from a color ink carrier pixel-by-pixel to the material to be imprinted by utilizing a light-hydraulic effect.

56. The device in accordance with claim 1, characterized in that the network (19) for electronic communication of at least image data (02) makes available the data set with image data (02) of all printed images on the page of the printed product simultaneously at the interface (26) of each raster image processor (03).

UNITED STATES PATENT AND TRADEMARK OFFICE

Commissioner for Patents
United States Patent and Trademark Office
P.O. Box 1450
Alexandria, VA 22313-1450
www.uspto.gov

MAIL

NOV 26 2010

DIRECTOR'S OFFICE
TECHNOLOGY CENTER 2600

JONES, TULLAR & COOPER, P.C.
P.O. BOX 2266 EADS STATION
ARLINGTON VA 22202

In re Application of BIRKENFELD, ANDREAS STEFAN, et al. Application No. 11/793,627 Filed: June 20, 2007 Attorney Docket No. **W1.2503 PCT-US**	DECISION ON REQUEST TO PARTICIPATE IN PATENT PROSECUTION HIGHWAY PROGRAM AND PETITION TO MAKE SPECIAL UNDER 37 CFR 1.102(d)

This is a decision on the request to participate in the PCT Patent Prosecution Highway (PPH) pilot program and the petition under 37 CFR 1.102(d), filed September 28, 2010 to make the above-identified application special.

The request and petition are **GRANTED**.

A grantable request to participate in the PCT-PPH pilot program and petition to make special require:

(1) The U.S. application be (a) a national stage entry of the corresponding PCT application, or (b) a national stage entry of another PCT application which claims priority to the corresponding PCT application, or (c) a national stage application that claims domestic/foreign priority to the corresponding PCT application, (d) a national application which forms the basis for the priority claim in the corresponding PCT application, or (e) a continuation application of the U.S. application which satisfies one of the above (a) to (d) scenarios.
(2) A copy of the latest international work product (WO/ISA, WO/IPEA, or IPER) in the corresponding PCT application(s) which indicates at least one claim in the PCT application has novelty, inventive step, and industrial applicability.
(3) A copy of all claims which were indicated as having novelty, inventive step and industrial applicability in the corresponding PCT application(s).
(4) English translations of the documents in (2) and (3) (if the documents are not in the English language).
(5) All the claims in the U.S. application must sufficiently correspond or be amended to sufficiently correspond to the claims which were indicated as having novelty, inventive step, and industrial applicability in the corresponding PCT application(s).
(6) Examination of the U.S. application has not begun;
(7) An information disclosure statement listing the documents cited in the international work products (ISR, WO/ISA. WO/IPEA, IPER) of the corresponding PCT application(s) and

(8) The petition fee under 37 CFR 1.17(h).

The request to participate in the PCT-PPH pilot program and petition comply with the above requirements. Accordingly, the above-identified application has been accorded "special" status.

Telephone inquiries concerning this decision should be directed to Ken Wieder at 571-272-2986.

All other inquiries concerning the examination or status of the application should be directed to Patent Application Information Retrieval (PAIR) system.

The application is being forwarded to the examiner for action on the merits commensurate with this decision.

/Kenneth A. Wieder/

Kenneth A. Wieder
Quality Assurance Specialist
Technology Center 2600
Communications

UNITED STATES PATENT AND TRADEMARK OFFICE

Commissioner for Patents
United States Patent and Trademark Office
P.O. Box 1450
Alexandria, VA 22313-1450
www.uspto.gov

YOUNG & THOMPSON
209 MADISON STREET
SUITE 500
ALEXANDRIA, VA 22314

MAILED

MAR 28 2011

OFFICE OF PETITIONS

In re Application of
Arnaud Boscher, et al.
Application No. 11/793,673
Filed: August 9, 2007
Attorney Docket No. 0579-1150

DECISION ON PETITION
TO WITHDRAW
FROM RECORD

This is a decision on the Request to Withdraw as attorney or agent of record under 37 C.F.R. § 1.36(b), filed February 11, 2011.

The request is **NOT APPROVED**.

A grantable request to withdraw as attorney/agent of record must be signed by every attorney/agent seeking to withdraw or contain a clear indication that one attorney is signing on behalf of another/others.

The request cannot be approved because the practitioner(s) requesting the withdrawal have not certified that they (1) have given reasonable notice to the client, prior to the expiration of the response period, that the practitioner(s) intend to withdraw from employment, (2) have delivered to the client or a duly authorized representative of the client all papers and property (including funds) to which the client is entitled, (3) have notified the client of any responses that may be due and the time frame within which the client must respond. The failure to do so may subject the practitioner to discipline. It is also noted that false certification may violate a practitioners' duty under 37 CFR 10.23(b)(4) and (b)(5).

In order to request or take action in a patent matter, the assignee must establish its ownership of the patent to the satisfaction of the Director. In this regard, a Statement under 37 CFR 3.73(b) must have either: (i) documentary evidence of a chain of title from the original owner to the assignee (e.g., copy of an executed assignment), and a statement affirming that the documentary evidence of the chain of title from the original owner to the assignee was or concurrently is being submitted for recordation pursuant to § 3.11; or (ii) a statement specifying where documentary evidence of a chain of title from the original owner to the assignee is recorded in the assignment records of the Office (e.g., reel and frame number).

Petitioner should also note that the Office will no longer accept address changes to a new practitioner of law firm filed with a Request, absent the filing of a power of attorney to the new representative. The Office will either change the correspondence address of record to the most current address information provided for the assignee of the entire interest who properly became of record under 37 CFR 3.71 or, the most current address information provided for the first named inventor.

Accordingly, the request to withdraw from record does not include an acceptable current correspondence address for future communications from the Office.

Additionally, as set forth in MPEP 403(I), the addition or deletion of a practitioner from the list of persons associated with a Customer Number should be done by way of a *Request for Customer Number Data Change* (PTO/SB/124) and not a *Request for Withdrawal As Attorney or Agent and Change of Correspondence Address* (Form PTO/SB/83).

All future communications from the Office will continue to be directed to the above-listed address until otherwise notified by applicant.

Telephone inquiries concerning this decision should be directed to undersigned at 571-272-1642. All other inquiries concerning the examination or status of this application should be directed to the Technology Center.

/AMW/
April M. Wise
Petitions Examiner
Office of Petitions

- 7 SEP 2010

United States Patent and Trademark Office

Commissioner for Patents
United States Patent and Trademark Office
P.O. Box 1450
Alexandria, VA 22313-1450
www.uspto.gov

BIRCH STEWART KOLASCH & BIRCH
PO BOX 747
FALLS CHURCH VA 22040-0747

In re Application of	:	
Tanaka et al.	:	
Application No.: 11/793,716	:	
PCT No.: PCT/JP2005/023634	:	
Int. Filing Date: 22 December 2005	:	
Priority Date: 24 December 2004	:	DECISION
Attorney Docket No.: 1261-0171PUS1	:	
For: Method Of Examining Inflammatory Disease And	:	
Method Of Screening Remedy For Inflammatory...	:	

The petition to revive under 37 CFR 1.137(b) filed on 15 December 2009 in the above-captioned application is hereby **GRANTED** as follows:

Petitioner states that "the entire delay in filing the required reply from the due date for the required reply until the filing of a grantable petition under 37 C.F.R. § 1.137(b) was unintentional." Said statement is being accepted in satisfaction of 37 CFR 1.137(b)(3).

A review of the application file reveals that applicant has paid the petition fee. The required reply has been filed. No terminal disclaimer is required. Therefore, the request to revive the application abandoned under 35 U.S.C. 371(d) is granted as to the national stage in the United States of America.

This application is being returned to the Office of Patent Application Processing for further processing. Its date under 35 U.S.C. 371(c)(1), (2) and (4) is **08 April 2008**.

/George Dombroske/
George Dombroske
PCT Legal Examiner
Office of PCT Legal Administration
Tel: (571) 272-3283

UNITED STATES PATENT AND TRADEMARK OFFICE

UNITED STATES DEPARTMENT OF COMMERCE
United States Patent and Trademark Office
Address: COMMISSIONER FOR PATENTS
P.O. Box 1450
Alexandria, Virginia 22313-1450
www.uspto.gov

APPLICATION NO.	FILING DATE	FIRST NAMED INVENTOR	ATTORNEY DOCKET NO.	CONFIRMATION NO.
11/793,717	09/27/2007	Masayuki Ryuto	1259-0370PUS1	7228

7590 09/22/2010
BIRCH STEWART KOLASCH & BIRCH
PO BOX 747
FALLS CHURCH, VA 22040-0747

EXAMINER
MEHTA, BHAVESH M

ART UNIT	PAPER NUMBER
2624	

NOTIFICATION DATE	DELIVERY MODE
09/22/2010	ELECTRONIC

DECISION DISMISSING PETITION UNDER 37 CFR 1.138(d)

The declaration of express abandonment will not be recognized

This is in response to the petition under 37 CFR 1.138(d), requesting for a refund of any previously paid search fee and excess claims fee in the above-identified application.

The petition is dismissed.

The express abandonment will **not** be recognized for the reason(s) indicated below:

1. ☐ The petition was not filed in sufficient time to permit the appropriate officials to recognize the abandonment before an examination has been made of the application. See 37 CFR 1.138(d).
2. ☐ The petition was not signed by a party authorized by 37 CFR 1.33(b)(1), (3) or (4).
3. ☑ The application is not an application filed under 35 U.S.C. 111(a) on or after December 8, 2004.
4. ☐ The petition for express abandonment under 1.138(d) is dismissed because the applicant did not pay any search fee and excess claims fees in the above-identified application.

Telephone inquiries should be directed to the Office of Data Management at (571) 272-4200.

Mimi Farmer

Patent Publication Branch
Office of Data Management

FORM PET651D (Rev. 08/07)

UNITED STATES PATENT AND TRADEMARK OFFICE

Commissioner for Patents
United States Patent and Trademark Office
P.O. Box 1450
Alexandria, VA 22313-1450
www.uspto.gov

ROCHE DIAGNOSTICS OPERATIONS INC.
9115 HAGUE ROAD
INDIANAPOLIS IN 46250-0457

MAILED

NOV 22 2010

OFFICE OF PETITIONS

In re Application of	:	
Albert Wohland	:	
Application No. 11/793,794	:	DECISION GRANTING PETITION
Filed: June 21, 2007	:	UNDER 37 CFR 1.313(c)(2)
Attorney Docket No. 22983 US-DC	:	

This is a decision on the petition under 37 CFR 1.313(c)(2), filed November 19, 2010, to withdraw the above-identified application from issue after payment of the issue fee.

The petition is **GRANTED**.

The above-identified application is withdrawn from issue for consideration of a submission under 37 CFR 1.114 (request for continued examination). *See* 37 CFR 1.313(c)(2).

Petitioner is advised that the issue fee paid on October 15, 2010 cannot be refunded. If, however, this application is again allowed, petitioner may request that it be applied towards the issue fee required by the new Notice of Allowance.[1]

The petition is not signed by an attorney of record. Nevertheless, in accordance with 37 CFR 1.34, the signature of Mr. Douglas G. Gallagher appearing on the correspondence shall constitute a representation to the United States Patent and Trademark Office that he is authorized to represent the particular party on whose behalf he acts. If Mr. Gallagher desires to receive future correspondence regarding this file, the appropriate power of attorney documents must be submitted. A courtesy copy of this decision is being mailed to petitioner herein. However, until otherwise instructed, all future correspondence regarding this application file will be directed solely to the above-noted correspondence address of record.

Telephone inquiries should be directed to the undersigned at (571) 272-3208.

---

[1] *The request to apply the issue fee to the new Notice may be satisfied by completing and returning the new Part B – Fee(s) Transmittal Form (along with any balance due at the time of submission). Petitioner is advised that the Issue Fee Transmittal Form* ***must*** *be completed and timely submitted to avoid abandonment of the application.*

This application is being referred to Technology Center AU 1772 for processing of the request for continued examination under 37 CFR 1.114 and for consideration of the concurrently filed IDS.

/Karen Creasy/
Karen Creasy
Petitions Examiner
Office of Petitions

Cc:

WOODARD, EMHARDT, MORIARTY,
MCNETT & HENRY LLP
11 MONUMENT CIRCLE, SUITE 3700
INDIANAPOLIS, INDIANA 46204-5137

UNITED STATES PATENT AND TRADEMARK OFFICE

Commissioner for Patents
United States Patent and Trademark Office
P.O. Box 1450
Alexandria, VA 22313-1450
www.uspto.gov

FINNEGAN, HENDERSON, FARABOW,
GARRETT & DUNNER LLP
901 NEW YORK AVENUE, NW
WASHINGTON DC 20001-4413

MAILED
JAN 17 2012
OFFICE OF PETITIONS

In re Application of :
Nieswandt, et al. :
Application No. 11/793,820 :
Filed: November 26, 2007 :
Atty Docket No. 06478.1513-00000

DECISION ON APPLICATION
FOR
PATENT TERM ADJUSTMENT

This is a decision on the "APPLICATION FOR PATENT TERM ADJUSTMENT—PRE GRANT", filed January 4, 2012, which will be treated as a petition under 37 CFR § 1.705(b). Applicants request that the initial determination of patent term adjustment under 35 U.S.C. 154(b) be corrected from sixty-nine (69) days to one hundred and three (103) days.

The application for patent term adjustment is **GRANTED.**

The Office has updated the PAIR screen to reflect that the correct Patent Term Adjustment (PTA) determination at the time of the mailing of the Notice of Allowance is one hundred and three (103) days. A copy of the updated PAIR screen, showing the correct determination, is enclosed.

On October 20, 2011, the Office mailed the Determination of Patent Term Adjustment under 35 U.S.C. 154(b) in the above-identified application. The Notice stated that the patent term adjustment (PTA) to date is sixty-nine (69) days. On January 4, 2012, applicants timely submitted the instant application for patent term adjustment.

Applicants dispute the reduction of thirty-four (34) days for filing of the "INFORMATION DISCLOUSRE STATEMENT UNDER 37 CFR 1.97(c)" on July 13, 2011, after a reply had been filed. See 37 C.F.R. § 1.704(c)(8)[2]. Applicants contend that they submitted

[2] 37 CFR § 1.704(c)(8) states:

the "INFORMATION DISCLOUSRE STATEMENT UNDER 37 CFR 1.97(c)"at the request of the examiner.

Applicants' contention is well taken. The record supports a conclusion that the supplemental reply filed July 13, 2011, was expressly requested by the examiner within the meaning of 37 CFR 1.704(c)(8). Accordingly, the reduction of 34 days is not warranted and is being removed.

In view thereof, the correct patent term adjustment at the time of the mailing of the notice of allowance is **one hundred and three (103) days** (226 days of Office delay - 123 days of applicant delay = 103 days).

Submission of the $200.00 fee set forth in 37 C.F.R. § 1.18(e) is acknowledged. No additional fee is required.

Applicants are reminded that any delays by the Office pursuant to 37 CFR 1.702(a)(4) and 1.702(b) and any applicant delays under 37 CFR 1.704(c)(10) will be calculated at the time of the issuance of the patent and applicants will be notified of the revised patent term adjustment to be indicated on the patent in the Issue Notification letter that is mailed to applicants approximately three weeks prior to issuance.

Telephone inquiries regarding this matter should be directed to the undersigned at (571) 272-3222.

/Kenya A. Mclaughlin/

Kenya A. McLaughlin
Petitions Attorney
Office of Petitions

Enclosure: Copy of REVISED PALM screen

Submission of a supplemental reply or other paper, other than a supplemental reply or other paper expressly requested by the examiner, after a reply has been filed, in which case the period of adjustment set forth in § 1.703 shall be reduced by the number of days, if any, beginning on the day after the date the initial reply was filed and ending on the date that the supplemental reply or other such paper was filed[.]

Patent Term Adjustments

PTA/PTE Information | Patent Term Adjustment | Patent Term Extension

Application Number*: 11793820 Search | Explanation of PTA Calculation | Explanation of PTE Calculation

PTA Calculations for Application: 11793820

Application Filing Date	11/26/2007	OverLapping Days Between (A and B) or (A and C)	0
Issue Date of Patent		Non-Overlapping USPTO Delays:	226
A Delays	226	PTO Manual Adjustment	34
B Delays	0	Applicant Delay (APPL)	157
C Delays	0	Total PTA (days)	103

* - Sorted Column

File Contents History

Action Number	Action Recorded Date	Action Due Date	Action Code	Action Description	Duration PTO	Duration APPL	Parent Action Number
99	01/12/2012		P028	Adjustment of PTA Calculation by PTO	34		0
90	10/20/2011		MN/=.	Mail Notice of Allowance			0
89	10/19/2011		OAR	Office Action Review			0
88	10/19/2011		OAR	Office Action Review			0
87	10/19/2011		IREV	Issue Revision Completed			0
86	10/19/2011		DVER	Document Verification			0
85	10/19/2011		N/=.	Notice of Allowance Data Verification Completed			0
84	10/19/2011		DOCK	Case Docketed to Examiner in GAU			0
83	10/18/2011		EX.R	Reasons for Allowance			0
82	10/18/2011		CNTA	Allowability Notice			0
79	10/13/2011		FWDX	Date Forwarded to Examiner			0
76	10/13/2011		ABN9	Disposal for a RCE / CPA / R129			0
81	10/03/2011		IDSC	Information Disclosure Statement considered			0
80	10/03/2011		M844	Information Disclosure Statement (IDS) Filed			0
78	10/03/2011		AMSB	Amendment Submitted/Entered with Filing of CPA/RCE			0
77	10/03/2011		RCEX	Request for Continued Examination (RCE)			0
75	10/03/2011		WIDS	Information Disclosure Statement (IDS) Filed			0
74	10/03/2011		BRCE	Workflow - Request for RCE - Begin			0
73	08/15/2011		MCTFR	Mail Final Rejection (PTOL - 326)			0
72	08/12/2011		OAR	Office Action Review			0
71	08/03/2011		OAR	Office Action Review			0
70	08/02/2011		CTFR	Final Rejection			0
69	07/13/2011	06/09/2011	M844	Information Disclosure Statement (IDS) Filed		34	61
68	07/13/2011		IDSC	Information Disclosure Statement considered			0
65	07/13/2011		WIDS	Information Disclosure Statement (IDS) Filed			0
62	06/21/2011		FWDX	Date Forwarded to Examiner			0
67	06/09/2011		IDSC	Information Disclosure Statement considered			0
64	06/09/2011		RCAP	Reference capture on IDS			0
63	06/09/2011		M844	Information Disclosure Statement (IDS) Filed			0
61	06/09/2011		A...	Response after Non-Final Action			0
60	06/09/2011		WIDS	Information Disclosure Statement (IDS) Filed			0
66	04/21/2011		IDSC	Information Disclosure Statement considered			0
59	04/21/2011		RCAP	Reference capture on IDS			0
58	04/21/2011		EIDS.	Electronic Information Disclosure Statement			0
57	04/21/2011		WIDS	Information Disclosure Statement (IDS) Filed			0
56	03/09/2011		MCTNF	Mail Non-Final Rejection			0
55	03/08/2011		CTNF	Non-Final Rejection			0
54	02/10/2011		FWDX	Date Forwarded to Examiner			0
51	02/10/2011		ABN9	Disposal for a RCE / CPA / R129			0
53	02/04/2011		AMSB	Amendment Submitted/Entered with Filing of CPA/RCE			0
52	02/04/2011	11/05/2010	RCEX	Request for Continued Examination (RCE)		91	48
50	02/04/2011		XT/G	Request for Extension of Time - Granted			0
49	02/04/2011		BRCE	Workflow - Request for RCE - Begin			0
48	08/05/2010		MCTFR	Mail Final Rejection (PTOL - 326)			0
47	08/04/2010		CTFR	Final Rejection			0
43	06/21/2010		IDSC	Information Disclosure Statement considered			0
41	06/21/2010	05/25/2010	M844	Information Disclosure Statement (IDS) Filed		27	36
40	06/21/2010		WIDS	Information Disclosure Statement (IDS) Filed			0
37	06/15/2010		FWDX	Date Forwarded to Examiner			0
42	05/25/2010		IDSC	Information Disclosure Statement considered			0
39	05/25/2010		RCAP	Reference capture on IDS			0
38	05/25/2010		M844	Information Disclosure Statement (IDS) Filed			0
36	05/25/2010		A...	Response after Non-Final Action			0
35	05/25/2010		WIDS	Information Disclosure Statement (IDS) Filed			0
34	02/25/2010		MCTNF	Mail Non-Final Rejection			0

33	02/25/2010		CTNF	Non-Final Rejection			0
29	12/14/2009		IDSC	Information Disclosure Statement considered			0
27	12/14/2009	12/09/2009	M844	Information Disclosure Statement (IDS) Filed		5	24
26	12/14/2009		WIDS	Information Disclosure Statement (IDS) Filed			0
25	12/14/2009		FWDX	Date Forwarded to Examiner			0
24	12/09/2009		ELC.	Response to Election / Restriction Filed			0
23	12/09/2009		XT/G	Request for Extension of Time - Granted			0
22	09/09/2009	01/26/2009	MCTRS	Mail Restriction Requirement	226		11
21	09/09/2009		CTRS	Restriction/Election Requirement			0
19	11/26/2008		DOCK	Case Docketed to Examiner in GAU			0
14	11/25/2008		TSSCOMP	IFW TSS Processing by Tech Center Complete			0
13	10/16/2008		PG-ISSUE	PG-Pub Issue Notification			0
12	08/01/2008		OIPE	Application Dispatched from OIPE			0
10	07/10/2008		PGPC	Sent to Classification Contractor			0
9	07/10/2008		FLRCPT.O	Filing Receipt			0
8	07/10/2008		M903	Notice of DO/EO Acceptance Mailed			0
28	11/26/2007		IDSC	Information Disclosure Statement considered			0
18	11/26/2007		RCAP	Reference capture on IDS			0
17	11/26/2007		M844	Information Disclosure Statement (IDS) Filed			0
11	11/26/2007		371COMP	371 Completion Date			0
7	11/26/2007		ADDFLFEE	Additional Application Filing Fees			0
6	11/26/2007		OATHDECL	A statement by one or more inventors satisfying the requirement under 35 USC 115, Oath of the Applic			0
5	11/26/2007		WIDS	Information Disclosure Statement (IDS) Filed			0
0.5	12/20/2005		NEFILE	International Filing date			0

Export to: Excel

UNITED STATES PATENT AND TRADEMARK OFFICE

Commissioner for Patents
United States Patent and Trademark Office
P.O. Box 1450
Alexandria, VA 22313-1450
www.uspto.gov

SCULLY, SCOTT, MURPHY & PRESSER, P.C.
400 GARDEN CITY PLAZA
SUITE 300
GARDEN CITY NY 11530

MAILED

FEB 01 2011

OFFICE OF PETITIONS

In re Application of
Geissler et al.
Application No. 11/793,856
Filed: June 21, 2007
Attorney Docket No. 21093

DECISION ON PETITION

This is a decision on the petition under the unintentional provisions of 37 CFR 1.137(b), filed May 27, 2010, to revive the above-identified application.

The petition is **GRANTED**.

This application became abandoned for failure to timely pay the issue and publication fees on or before May 3, 2010, as required by the Notice of Allowance and Fee(s) Due mailed February 1, 2009. Accordingly, the date of abandonment of this application is May 4, 2010. A Notice of Abandonment was mailed May 18, 2010.

The petition satisfies the requirements of 37 CFR 1.137(b) in that petitioner has supplied (1) the reply in the form of payment of the issue fee of $1,510.00 and the publication fee of $300.00, (2) the petition fee of $1,620.00; and (3) a proper statement of unintentional delay.

Telephone inquiries concerning this decision should be directed to the undersigned at (571) 272-7751.

This application is being referred to the Office of Data Management for processing into a patent.

Joan Olszewski
Petitions Examiner
Office of Petitions

UNITED STATES PATENT AND TRADEMARK OFFICE

Commissioner for Patents
United States Patent and Trademark Office
P.O. Box 1450
Alexandria, VA 22313-1450
www.uspto.gov

K&L Gates, LLP
P.O. BOX 1135
Chicago, IL 60690

MAILED

AUG 24 2010

OFFICE OF PETITIONS

In re Application of	:	
Pedro Ricardo De Frias Rebelo Nunes	:	
Application No. 11/793,864	:	DECISION ON PETITION
Filed: May 8, 2008	:	TO WITHDRAW
Attorney Docket No. 2004P15985WOUS	:	FROM RECORD

This is a decision on the Request to Withdraw as attorney or agent under 37 CFR § 1.36(b) or 37 CFR § 10.40 filed May 31, 2010.

The request is **NOT APPROVED**.

A review of the file record indicates that Kevin R. Spivak and the attorneys/agents associated with Customer Number 87133 do not have power of attorney in this patent application nor is there any statement or evidence of record of employment in or otherwise being engaged in the proceedings in this patent application. Accordingly, the request to withdraw under 37 CFR § 1.36(b) is not applicable.

Applicant should note that the above application is abandoned for failure to timely respond to the Office action mailed on October 26, 2009.

All future communications from the Office will continue to be directed to the above-listed address until otherwise properly notified by the applicant.

Telephone inquires concerning this decision should be directed to the undersigned at (571) 272-3226.

Andrea Smith
Petitions Examiner
Office of Petitions

cc: Kevin R. Spivak
Dickinson Wright, PLLC
1875 Eye Street, NW – Suite 1200
Washington, DC 20006

Nokia Siemens Networks GmbH & Co. KG
CTO RTP IPR/Patent Administration
Munich 80240 **GERMANY**

UNITED STATES PATENT AND TRADEMARK OFFICE

UNITED STATES DEPARTMENT OF COMMERCE
United States Patent and Trademark Office
Address: COMMISSIONER FOR PATENTS
P.O. Box 1450
Alexandria, Virginia 22313-1450
www.uspto.gov

APPLICATION NO.	FILING DATE	FIRST NAMED INVENTOR	ATTORNEY DOCKET NO.	CONFIRMATION NO.
11/793,914	03/17/2008	Dietrich S. Wienke	BHD-4662-565	8109

23117 7590 10/03/2011
NIXON & VANDERHYE, PC
901 NORTH GLEBE ROAD, 11TH FLOOR
ARLINGTON, VA 22203

EXAMINER
WESTBROOK, SUNSURRAYE

ART UNIT	PAPER NUMBER
3612	

MAIL DATE	DELIVERY MODE
10/03/2011	PAPER

Please find below and/or attached an Office communication concerning this application or proceeding.

The time period for reply, if any, is set in the attached communication.

UNITED STATES PATENT AND TRADEMARK OFFICE

Commissioner for Patents
United States Patent and Trademark Office
P.O. Box 1450
Alexandria, VA 22313-1450
www.uspto.gov

OCT - 3 2011

NIXON & VANDERHYE, PC
901 NORTH GLEBE ROAD, 11TH FLOOR
ARLINGTON, VA 22203

In re Application of	:	
WIENKE et al.	:	DECISION ON PETITION
Application No. 11/793,914	:	UNDER 37 CFR 1.181
Filed: March 17, 2008	:	
For: AIR CARGO NET	:	

This is in response to applicants' petition received September 7, 2011 requesting withdrawal of "certain objections raised by the Examiner in the final Official Action dated March 8, 2011."

The petition is **GRANTED-IN-PART**.

A review of the prosecution file shows that the instant application was not filed with any drawings. In the non-final Office action mailed July 22, 2010, the examiner required applicants to furnish a drawing under 37 CFR 1.81 because the "subject matter of this application admits of illustration by a drawing to facilitate understanding of the invention." Applicants furnished a single drawing figure on November 19, 2010. In the final Office action mailed March 8, 2011, the examiner objected to the drawing because the figure was not labeled as "figure 1" and features of claim 8 were not shown in the drawing figure. Additionally, the specification was also objected to as introducing new matter into the disclosure, the added material being "center part 103" in a triangular formation.

With respect to the figure label, petitioner argues that "the labeling of the sole figure without a figure number as presented with the November 19, 2010 amendment is in compliance with the Rules."

> **§ 1.84 Standards for drawings.**
>
> (u) *Numbering of views.*
>
> (1) The different views must be numbered in consecutive Arabic numerals, starting with 1, independent of the numbering of the sheets and, if possible, in the order in which they appear on the drawing sheet(s). Partial views intended to form one complete view, on one or several sheets, must be identified by the same number followed by a capital letter. View numbers must be preceded by the

abbreviation "FIG." ***Where only a single view is used in an application to illustrate the claimed invention, it must not be numbered and the abbreviation "FIG." must not appear***.

37 CF 1.84, reproduced in part above (emphasis added), clearly sets forth that where only a single view is used in an application to illustrate the claimed invention, it must not be numbered. Accordingly, the objection to the figure as not being labeled "figure 1" is hereby withdrawn.

With respect to the features of claim 8 not being illustrated, petitioner asserts that the drawings in an application may include illustrations which facilitate an understanding of an invention. Petitioner further asserts that the recitation of a "core, a plurality of windings of fibres [sic] and a covering sheath" would not facilitate any greater understanding than what the words per se provide."

§ 1.81 Drawings required in patent application.

(a) The applicant for a patent is required to furnish a drawing of his or her invention where necessary for the understanding of the subject matter sought to be patented; this drawing, or a high quality copy thereof, must be filed with the application. Since corrections are the responsibility of the applicant, the original drawing(s) should be retained by the applicant for any necessary future correction.

(b) Drawings may include illustrations which ***facilitate an understanding of the invention*** (for example, flowsheets in cases of processes, and diagrammatic views).

37 CFR 1.81 indicates, in part above (emphasis added), that applicant is "required to furnish a drawing...where necessary for the understanding of the subject matter sought to be patented" and that "drawings may include illustrations which facilitate an understanding of the invention." Petitioner's argument is persuasive since an illustration of "a core, a plurality of windings of fibres and a covering sheath" would not facilitate any greater understanding of the invention than what the words per se provide. Accordingly, the objection to the drawing as not showing certain features of claim 8 is hereby withdrawn.

With regards to the objection under 37 CFR 1.132(a) of the specification, the disclosure, as originally filed, has been thoroughly review; and it is determined that the disclosure fails to provide support for a central part having a triangular configuration. The only configuration for the cargo net specifically identified in the disclosure is "cruciform in shape." Thus, the net has a square central part and four lobes, as exemplified by WO 2004/082995. Applicant makes no other reference to the central part having any other configuration. Therefore, the objection to the specification (and the drawing) as introducing new matter will not be withdrawn.

An appeal brief was filed September 7, 2011. The application will be returned to the examiner for consideration of the appeal brief.

Any questions concerning this decision should be referred to Quality Assurance Specialist Teri Luu at (571) 272-7045.

David Talbott, Director
Technology Center 3600
(571) 272-5150

DT/tl: 09/30/11

UNITED STATES PATENT AND TRADEMARK OFFICE

Commissioner for Patents
United States Patent and Trademark Office
P.O. Box 1450
Alexandria, VA 22313-1450
www.uspto.gov

CONTINENTAL TEVES, INC.
ONE CONTINENTAL DRIVE
AUBURN HILLLS MI 48326-1581

MAILED
MAY 3 1 2011
OFFICE OF PETITIONS

In re Application of	:	
Ridder, et el.	:	
Application No. 11/793,963	:	DECISION
Filed/Deposited: 25 June, 2007	:	
Attorney Docket No. TM051	:	

This is a decision on the petition filed on 16 February, 2011, pursuant to 37 C.F.R. §1.137(b) for revival of an application abandoned due to unintentional delay.

NOTE:

The record (including the petition filed on 16 February, 2011) does not necessitate a finding that the delay between midnight 24 December, 2009 (the date of abandonment), and 16 February, 2011 (the date of the filing of grantable petition), was not unintentional.

Rather, the Patent and Trademark Office is relying in this matter on the duty of candor and good faith of Petitioner Craig Hallacher (Reg. No. 54,896) when accepting Petitioner's representation that the delay in filing the response was unintentional.[1]

The petition pursuant to 37 C.F.R. §1.137(b) is **GRANTED**.

As to the Allegations
of Unintentional Delay

The requirements of a grantable petition pursuant to 37 C.F.R. §1.137(b) are the petition and fee therefor, a reply, a proper statement and/or showing of unintentional delay under the regulation, and, where applicable, a terminal disclaimer and fee

[1] See Changes to Patent Practice and Procedure, 62 Fed. Reg. at 53160 and 53178, 1203 Off. Gaz. Pat. Office at 88 and 103 (responses to comments 64 and 109)(applicant obligated under 37 C.F.R. §10.18 to inquire into the underlying facts and circumstances when providing the statement required by 37 C.F.R. §1.137(b) to the Patent and Trademark Office).

Petitioners' attentions always are directed to the guidance in the Commentary at MPEP §711.03(c)(II).

BACKGROUND

The record reflects as follows:

Petitioner failed to reply timely and properly to the non-final Office action mailed on 24 September, 2009, with reply due absent extension of time on or before 24 December, 2009.

The application went abandoned by operation of law after midnight 24 December, 2009.

The Office mailed the Notice of Abandonment on 2 April, 2010.

On 16 February, 2011, Petitioner filed, *inter alia*, a petition with fee pursuant to 37 C.F.R. §1.137(b), a reply in the form of an amendment\, and made the statement of unintentional delay.

As previously noted, the record (including the petition filed on 16 February, 2011) does not necessitate a finding that the delay between midnight 24 December, 2009 (the date of abandonment), and 16 February, 2011 (the date of the filing of grantable petition), was not unintentional.

Rather, the Patent and Trademark Office is relying in this matter on the duty of candor and good faith of Petitioner Craig Hallacher (Reg. No. 54,896) when accepting Petitioner's representation that the delay in filing the response was unintentional.[2]

The availability of applications and application papers online to applicants/practitioners who diligently associate their Customer Number with the respective application(s) now provides an applicant/practitioner on-demand information as to events/transactions in an application.

Out of an abundance of caution, Petitioners always are reminded that those registered to practice and all others who make representations before the Office **must** inquire into the underlying facts of representations made to the Office and support averments with the appropriate documentation–since all owe to the Office the continuing duty to disclose.[3]

---

[2] See Changes to Patent Practice and Procedure, 62 Fed. Reg. at 53160 and 53178, 1203 Off. Gaz. Pat. Office at 88 and 103 (responses to comments 64 and 109)(applicant obligated under 37 C.F.R. §10.18 to inquire into the underlying facts and circumstances when providing the statement required by 37 C.F.R. §1.137(b) to the Patent and Trademark Office).

[3] See supplement of 17 June, 1999. The Patent and Trademark Office is relying on petitioner's duty of candor and good faith and accepting a statement made by Petitioner. See Changes to Patent Practice and Procedure, 62 Fed. Reg. at 53160 and 53178, 1203 Off. Gaz. Pat. Office at 88 and 103 (responses to comments 64 and 109)(applicant obligated under 37 C.F.R. §10.18 to inquire into the underlying facts and circumstances when providing statements to the Patent and Trademark Office).

STATUTES, REGULATIONS AND ANALYSIS

Congress has authorized the Commissioner to "revive an application if the delay is shown to the satisfaction of the Commissioner to have been "unavoidable." 35 U.S.C. §133 (1994).[4]
The regulations at 37 C.F.R. §1.137(a) and (b) set forth the requirements for a Petitioner to revive a previously unavoidably or unintentionally, respectively, abandoned application under this congressional grant of authority.

Unintentional delays are those that do not satisfy the very strict statutory and regulatory requirements of unavoidable delay, and, by definition, are not intentional.[5]))

As to Allegations of Unintentional Delay

The requirements of a grantable petition pursuant to 37 C.F.R. §1.137(b) are the petition and fee therefor, a reply, a proper statement of unintentional delay under the regulation, and, where applicable, a terminal disclaimer and fee.

It appears that the requirements under the rule have been satisfied.

CONCLUSION

Accordingly, the petition pursuant to 37 C.F.R. §1.137(b) is **granted**.

The instant application is released to the Technology Center 2858 for further processing in due course.

Petitioner may find it beneficial to view Private PAIR within a fortnight of the instant decision to ensure that the revival has been acknowledged by the TC/AU in response to this decision. It is noted that all inquiries with regard to status need be directed to the TC/AU where that change of status must be effected—that does not occur in the Office of Petitions.

---

[4] 35 U.S.C. §133 provides:
35 U.S.C. §133 Time for prosecuting application.
Upon failure of the applicant to prosecute the application within six months after any action therein, of which notice has been given or mailed to the applicant, or within such shorter time, not less than thirty days, as fixed by the Commissioner in such action, the application shall be regarded as abandoned by the parties thereto, unless it be shown to the satisfaction of the Commissioner that such delay was unavoidable.

[5] Therefore, by example, an unintentional delay in the reply might occur if the reply and transmittal form are to be prepared for shipment by the US Postal Service, but other pressing matters distract one's attention and the mail is not timely deposited for shipment.

Telephone inquiries regarding this decision may be directed to the undersigned at (571) 272-3214—it is noted, however, that all practice before the Office is in writing (see: 37 C.F.R. §1.2[6]) and the proper authority for action on any matter in this regard are the statutes (35 U.S.C.), regulations (37 C.F.R.) and the commentary on policy (MPEP). Therefore, no telephone discussion may be controlling or considered authority for Petitioner's action(s).

/John J. Gillon, Jr./
John J. Gillon, Jr.
Senior Attorney
Office of Petitions

---

[6] The regulations at 37 C.F.R. §1.2 provide:

§1.2 Business to be transacted in writing.

All business with the Patent and Trademark Office should be transacted in writing. The personal attdance of applicants or their attorneys or agents at the Patent and Trademark Office is unnecessary. The action of the Patent and Trademark Office will be based exclusively on the written record in the Office. No attention will be paid to any alleged oral promise, stipulation, or understanding in relation to which there is disagreement or doubt.

Requesting reconsideration of the patent term adjustment to be indicated on the patent under 37 CFR 1.705(b) based on the initial determination of patent term adjustment and a projected issuance date of the patent is premature. Accordingly, it is appropriate to dismiss as premature such a request.

Rather than file an application for patent term adjustment under 37 CFR 1.705(b) contesting the 37 CFR 1.702(b) calculation at the time of the mailing of the notice of allowance, applicant is advised that he may wait until the time of the issuance of the patent and file a request for reconsideration of the patent term adjustment pursuant to 37 CFR 1.705(d). As the USPTO does not calculate the amount of time earned pursuant to 37 CFR 1.702(b) until the time of the issuance of the patent, the Office will consider any request for reconsideration of the patent term adjustment due to an error in the calculation of 37 CFR 1.702(b) to be timely if the request for reconsideration is filed within two months of the issuance of the patent. However, as to all other bases for contesting the initial determination of patent term adjustment received with the notice of allowance, applicant must timely file an application for patent term adjustment prior to the payment of the issue fee[1].

The Office acknowledges submission of the $200.00 fee set forth in 37 CFR 1.18(e) for consideration of the application for patent term adjustment under 37 CFR 1.705(b).

Any request for reconsideration of the patent term adjustment indicated on the patent must be timely filed within 2 months after issuance pursuant to 37 CFR 1.705(d) and must include payment of the required fee under 37 CFR 1.18(e).

The Office of Data Management has been advised of this decision. This application is being referred to the Office of Data Management for issuance of the patent.

---

[1] For example, if an applicant disputes both the calculation of patent term adjustment under 37 CFR 1.702(a)(1) for Office failure to mail a first Office action or notice of allowance not later than fourteen months after the date on which the application was filed and under 37 CFR 1.702(b) for Office failure to issue a patent within three years of the actual filing date of the application, then applicant must still timely file an application for patent term adjustment prior to the payment of the issue fee to contest the calculation of Office delay in issuing a first Office action or notice of allowance. See 37 CFR 1.705(b) and 35 U.S.C. 154(b)(3)(B). A dispute as to the calculation of the §1.702(a)(1) period raised on request for reconsideration of patent term adjustment under 37 CFR 1.705(d) will be dismissed as untimely filed.

Telephone inquiries specific to this decision should be directed to the undersigned at (571) 272-3230.

Shirene Willis Brantley
Senior Petitions Attorney
Office of Petitions

UNITED STATES PATENT AND TRADEMARK OFFICE

Commissioner for Patents
United States Patent and Trademark Office
P.O. Box 1450
Alexandria, VA 22313-1450
www.uspto.gov

CONNOLLY BOVE LODGE & HUTZ, LLP
P O BOX 2207
WILMINGTON DE 19899

MAILED
DEC 14 2010
OFFICE OF PETITIONS

In re Application of	:	
Molinero	:	
Application No. 11/794,004	:	ON APPLICATION FOR
Filed: July 18, 2007	:	PATENT TERM ADJUSTMENT
Atty Docket No. 14546-00019-US	:	

This is in response to the REQUEST FOR RECONSIDERATION OF PATENT TERM ADJUSTMENT UNDER 37 C.F.R. § 1.705(B), filed October 11, 2010. Applicant believes the Office's calculation of one hundred seventy-seven (177) days of patent term adjustment as of the mailing of the initial determination of patent term adjustment is incorrect. Applicant submits that the initial determination of patent term adjustment should take into account the Office's failure to issue the patent within three years of the filing of the application. Applicant requests correction of the initial determination of patent term adjustment solely on the basis that the Office will take in excess of three years to issue this patent.

As the instant application for patent term adjustment requests reconsideration of the patent term adjustment as it relates to the Office's failure to issue the patent within 3 years of the filing date, the application for patent term adjustment under 37 CFR 1.705(b) is **DISMISSED as PREMATURE**.

Knowledge of the actual date the patent issues is required to calculate the amount, if any, of additional patent term patentee is entitled to for Office failure to issue the patent within 3 years. See § 1.702(b). The computer will not undertake the § 1.702(b) calculation until the actual date of issuance of the patent has been determined. Likewise, the computer will not calculate any further Office delay under § 1.702(a)(4) or applicant delay under § 1.704(c)(10) until the actual date of issuance of the patent has been determined. As such, the Office can not make a determination on the correctness of the patent term adjustment until the patent has issued.

UNITED STATES PATENT AND TRADEMARK OFFICE

UNITED STATES DEPARTMENT OF COMMERCE
United States Patent and Trademark Office
Address: COMMISSIONER FOR PATENTS
P.O. Box 1450
Alexandria, Virginia 22313-1450
www.uspto.gov

APPLICATION NO.	FILING DATE	FIRST NAMED INVENTOR	ATTORNEY DOCKET NO.	CONFIRMATION NO.
11/794,026	06/21/2007	Michael Muth	2006P01949WOUS	7385

7590 07/27/2011

Craig J. Loest
BSH Home Appliances Corp
100 Bosch Blvd
New Bern, NC 28562

EXAMINER
KASTURE, DNYANESH G

ART UNIT	PAPER NUMBER
3746	

MAIL DATE	DELIVERY MODE
07/27/2011	PAPER

Please find below and/or attached an Office communication concerning this application or proceeding.

The time period for reply, if any, is set in the attached communication.

UNITED STATES PATENT AND TRADEMARK OFFICE

Commissioner for Patents
United States Patent and Trademark Office
P.O. Box 1450
Alexandria, VA 22313-1450
www.uspto.gov

Craig J. Loest
BSH Home Appliances Corp
100 Bosch Blvd
New Bern NC 28562

In re Application of: MUTH, MICHAEL et al Serial No.: 11/794,026 Filed: June 21, 2007 Title: AXIALLY DRIVEN PISTON/CYLINDER UNIT	DECISION ON PETITION TO UNDER 37 C.F.R. 1.181

This is a decision on petition to accept the response of June 30, 2011 to the outstanding Office action of January 5, 2011 as timely and request a refund of the three-months extension of time fee paid due to failure to correct the mistakenly entered Power of Attorney filed on November 23, 2007. The request as being treated as a petition pursuant to 37 CFR 1.181(a). No fee is required.

The petition is **GRANTED.**

In the petition, petitioner indicates that there was a Power of Attorney directed to a different application, SN 11/104,065 filed on November 23, 2007 was entered in this application by mistake. Subsequently, on December 11, 2007, the applicant's attorney, Russell W. Warmock, filed a request to correct such Office mistake. Unfortunately, the Office failed to acknowledge the mistake and make such correction. Consequently, the Office action of January 30, 2011 was mailed to a wrong address. In the petition, petitioner further states that he became aware of the existence of the January 5, 2011 Office action on May 27, 2011. On June 6, 2011, the current petition was filed requesting re-mailing of the Office action with a new statutory period to respond. On June 30, 2011, a complete response to the Office action of January 5, 2011 was filed. As a precautionary matter, the petitioner also paid a three-month extension of time with the response filed on June 30, 2011.

A review of the application file does show the Power of Attorney for a serial number 11/104,065 was entered into this application by mistake. The Power of attorney now has been removed from the file and blocked from the public PAIR. The original Power of Attorney in this application has been reinstated. Since the applicant has responded the Office action of January 5, 2011, the

Office will accept the current response as timely. Given the fact that the Office action was mailed to the wrong address, in the interest of compact prosecution, rather than remailing the Office action and awaiting a second reply, the response filed on June 30, 2011 is hereby accepted as timely. In view of the fact that the Office action of January 5, 2011 was sent to the wrong address and the applicant has never received the original Office action of January 5, 2010, the requested refund of three-month extension fee is granted. Petitioner should file a separate request for refund with a copy of this decision with the Office of Finance.

The application is being forwarded to the examiner via the Supervisory Patent Examiner, Art Unit 3746 for consideration of the Rule 111 Amendment field on June 30, 2011 and preparation of a response accordingly. The delay if correcting the noted mistake is regretted. Should petitioner have any further questions, he is invited to contact Henry Yuen, Supervisory Patent Examiner at 571-272-4856.

Summary: PETITION GRANTED.

Sharon Gibson, Director
Technology Center 3700

UNITED STATES PATENT AND TRADEMARK OFFICE

Commissioner for Patents
United States Patent and Trademark Office
P.O. Box 1450
Alexandria, VA 22313-1450
www.uspto.gov

9/27/2011

Patent No. :7992694
Ser. No. :11794031
Inventor(s) :Krause et al.
Issued :8/9/11
Title :SEAL FOR TORQUE CONVERTER LOCKUP
Docket No. :

Re: Request for Certificate of Correction

Consideration has been given your request for the issuance of a certificate of correction for the above-identified patent under the provisions of Rule(s) 1.322 and/or 1.323.

Assignees' names and addresses (assignment data) printed in a patent, are based *solely* on information supplied in the appropriate space for identifying the assignment data, i.e., item 3 of the Issue Fee Transmittal Form PTOL-85B. Granting of a request under 37 CFR 3.81(b) is required to correct applicant's error providing ***incorrect or erroneous*** assignment data, *before* issuance of a Certificate of Correction, under 37 CFR 1.323 *(see Manual of Patent Examining Procedures (M.P.E.P) Chp.1400, sect. 1481).* This procedure is required *at any time after the issue fee is paid,* including after issuance of the patent.

In view of the foregoing, your request, in this mater, is hereby denied.

A request to correct the Assignee under 37 CFR 3.81(b) should include:

A. **the processing fee set forth in 37 CFR 1.17(h) (currently $130);**
B. a statement that the failure to include the correct assignee name on the PTOL-85B was inadvertent; and
C. a copy of the Notice of Recordation of Assignment Document, reflecting the reel and frame number where the assignment(s) is recorded and/or reflecting proof of *the date* the assignment was submitted for recordation.

In the Request, Applicant(s) may request that the file be forwarded to Certificates of Correction Branch, for issuance of a Certificate of Correction, if the Request is granted.

Any request under 37 CFR 3.81(b) should be directed to the following address or facsimile number:

By mail: Mail Stop PETITIONS
Commissioner for Patents
Post Office Box 1450
Alexandria, VA 22313-1450

By hand: Customer Service Window
Mail Stop Petitions
Randolph Building
401 Dulany Street
Alexandria, VA 22314

By fax: (703) 872-9306
ATTN: Office of Petitions

If a fee (currently $100) was previously submitted for consideration of a Request for Certificate of Correction, under CFR 1.323, to correct assignment data, , no additional fee is required.

A certificate of correction will be issued to correct the remaining errors noted in your request.

Henry Randall
Decisions & Certificates
of Correction Branch
(703) 756-1571

DAVIDSON, DAVIDSON & KAPPEL, LLC
485 Seventh Avenue
New York, NY 10018

HR

UNITED STATES PATENT AND TRADEMARK OFFICE

Commissioner for Patents
United States Patent and Trademark Office
P.O. Box 1450
Alexandria, VA 22313-1450
www.uspto.gov

JACOBSON HOLMAN PLLC
400 SEVENTH STREET N.W.
SUITE 600
WASHINGTON DC 20004

MAILED

JAN 18 2011

OFFICE OF PETITIONS

In re Application of	:	
Ng Ghee Tjia	:	
Application No. 11/794,038	:	DECISION ON PETITION
Filed: June 22, 2007	:	
Attorney Docket No. P71996US0	:	

This is a decision on the petition under the unintentional provisions of 37 CFR 1.137(b), filed November 29, 2010, to revive the above-identified application.

The petition is **GRANTED**.

The application became abandoned for failure to reply in a timely manner to the non-final Office action mailed, May 21, 2010, which set a shortened statutory period for reply of three (3) months. No extensions of time under the provisions of 37 CFR 1.136(a) were obtained. Accordingly, the application became abandoned on August 22, 2010.

The petition satisfies the requirements of 37 CFR 1.137(b) in that petitioner has supplied (1) the reply in the form of an Amendment, (2) the petition fee of $810.00, and (3) a proper statement of unintentional delay.

Telephone inquiries concerning this decision should be directed to the undersigned at (571) 272-7751.

This application is being referred to Technology Center AU 3771 for appropriate action by the Examiner in the normal course of business on the reply received.

Joan Olszewski
Petitions Examiner
Office of Petitions

UNITED STATES PATENT AND TRADEMARK OFFICE

Commissioner for Patents
United States Patent and Trademark Office
P.O. Box 1450
Alexandria, VA 22313-1450
www.uspto.gov

MAILED
AUG 29 2011
OFFICE OF PETITIONS

BUCHANAN INGERSOLL & ROONEY PC
POST OFFICE BOX 1404
ALEXANDRIA VA 22313-1404

In re Application of	:	
Bernard, et al.	:	
Application No. 11/794,083	:	ON PETITION
Filed: June 2, 2008	:	
Attorney Docket No. 0076144-000010	:	

This is a decision on the petition to revive under 37 CFR 1.137(b), filed August 16, 2011.

The petition under 37 CFR 1.137(b) is **GRANTED**.

The above-identified application became abandoned for failure to timely file a reply to the final Office action mailed January 14, 2011. The Office action set a shortened statutory period for reply of three months. No reply having been received, the application became abandoned on April 15, 2011. Applicants filed a continuation-in-part application, No. 13/108,720, on May 16, 2011. However, the continuation-in-part application was not filed with a one month extension of time. The Office mailed a Notice of Abandonment on August 18, 2011.

With the instant petition, applicant paid the petition fee, made the proper statement of unintentional delay, and submitted a month extension of time.

The above-identified application is being revived solely for purposes of continuity. As continuity has been established by this decision reviving the above-identified application, the above identified application is again abandoned in favor of the continuation application, No. 13/108,720, filed August 16, 2011.

Telephone inquiries concerning this decision should be directed to the undersigned at (571)272-3207.

Cliff Congo
Petitions Attorney
Office of Petitions

UNITED STATES PATENT AND TRADEMARK OFFICE

Commissioner for Patents
United States Patent and Trademark Office
P.O. Box 1450
Alexandria, VA 22313-1450
www.uspto.gov

BACON & THOMAS, PLLC
625 SLATERS LANE
FOURTH FLOOR
ALEXANDRIA VA 22314-1176

MAILED

JUN 16 2011

OFFICE OF PETITIONS

In re Patent No. 7,871,592 :
Issued January 18, 2011 :
Application No. 11/794,102 : ON PETITION
Filed: June 25, 2007 :
Attorney Docket Number: LINJ3067/REF :

This is a decision on the petition, filed under 37 CFR 1.323 on March 10, 2011, to correct the assignee's information on the front of the Patent.

The petition is **DISMISSED**.

Petitioner states that the name of a second assignee, was inadvertently not included on the Fee(s) Transmittal form PTOL-85(b) at the time of payment of the issue fee. Accordingly, petitioner requests that a certificate of correction be issued to reflect the name of the second assignee on the front page of the Letters Patent.

Petitioner is advised that while a certificate of correction, and fee, has been provided, the correction to assignee information cannot be corrected without a petition under 1.183 waiving the requirements under 37 CFR 3.81,(b)[1].

37 CFR 3.81(b), effective June 25, 2004, reads:

> *After payment of the issue fee:* Any request for issuance of an application in the name of the assignee submitted after the date of payment of the issue fee, and any request for a patent to be corrected to state the name of the assignee, must state that the assignment was submitted for recordation as set forth in § 3.11 before issuance of the patent, and must include a request for a certificate of correction under § 1.323 of this chapter (accompanied by the fee set forth in § 1.20(a) and the processing fee set forth in § 1.17(i) of this chapter.

The petition therefore is not grantable.

---

[1] *See* Official Gazette of June 22, 2004

Any request for reconsideration should be filed within **TWO MONTHS** of the date of this decision in order to be considered timely. This time period may not be extended pursuant to 37 CFR 1.136. The application will be retained in the Office of Petitions for **TWO (2) MONTHS** to await petitioner's reply to this decision.

Further correspondence with respect to this matter should be addressed as follows:

By mail: Mail Stop Petitions
Commissioner for Patents
P.O. Box 1450
Alexandria, VA 22313-1450

By FAX: (571) 273-8300
Office of Petitions

Telephone inquiries regarding this decision should be directed to the undersigned Petitions Attorney at (571) 272-3212.

Patricia Faison-Ball

Patricia Faison-Ball
Senior Petitions Attorney
Office of Petitions

UNITED STATES PATENT AND TRADEMARK OFFICE

Commissioner for Patents
United States Patent and Trademark Office
P.O. Box 1450
Alexandria, VA 22313-1450
www.uspto.gov

BACON & THOMAS, PLLC
625 SLATERS LANE
FOURTH FLOOR
ALEXANDRIA VA 22314-1176

MAILED

AUG 22 2011

OFFICE OF PETITIONS

In re Patent No. 7,871,592 :
Issued January 18, 2011 :
Application No. 11/794,102 : ON PETITION
Filed: June 25, 2007 :
Attorney Docket Number: LINJ3067/REF :

This is a decision on the "CONTINGENT PETITION UNDER 37 CFR 1.183", which is treated under 37 CFR 3.81(b)[1], to correct the assignee's name on the front of the Patent.

The petition is **GRANTED**.

Petitioner states that the name of a second assignee, CHIEN-PING JU, was not included on the Fee(s) Transmittal form PTOL-85(b) at the time of payment of the issue fee. Accordingly, petitioner requests that a certificate of correction be issued to reflect the name of the second assignee on the front page of the Letters Patent. Petitioner does not indicate that the failure to include the correct assignee name on the Fee(s) Transmittal form PTOL-85(b) was inadvertent, however, it will be so construed. Petitioner must notify the Office if this is **not** a correct interpretation of the statement contained in the petition.

37 CFR 3.81(b), effective June 25, 2004, reads:

> *After payment of the issue fee:* Any request for issuance of an application in the name of the assignee submitted after the date of payment of the issue fee, and any request for a patent to be corrected to state the name of the assignee, must state that the assignment was submitted for recordation as set forth in § 3.11 before issuance of the patent, and must include a request for a certificate of correction under § 1.323 of this chapter (accompanied by the fee set forth in § 1.20(a) and the processing fee set forth in § 1.17(i) of this chapter.

---

[1] *See* Official Gazette of June 22, 2004

In view thereof, and since Office assignment records reflect that **CHIEN-PING JU (US)** is also an assignee of record, the request complies with the provisions of 37 CFR 3.81(b) and it is therefore appropriate for a certificate of correction to issue.

The petition fee in the amount of $130.00 and the fee for the certificate of correction in the amount of $100 have been applied.

Inquiries concerning this decision should be directed to the undersigned at (571) 272-3212. Any questions concerning the issuance of a certificate of correction should be directed to the Certificates of Correction Branch at (703) 305-8309.

This file is being referred to the Certificates of Correction Branch for issuance of a certificate of correction.

Patricia Faison-Ball

Patricia Faison-Ball
Senior Petitions Attorney
Office of Petitions

UNITED STATES PATENT AND TRADEMARK OFFICE

UNITED STATES DEPARTMENT OF COMMERCE
United States Patent and Trademark Office
Address: COMMISSIONER FOR PATENTS
P.O. Box 1450
Alexandria, Virginia 22313-1450
www.uspto.gov

APPLICATION NO.	FILING DATE	FIRST NAMED INVENTOR	ATTORNEY DOCKET NO.	CONFIRMATION NO.
11/794,119	06/25/2007	Harold Monro Moody	MJW-4662-558	8169

23117 7590 01/11/2011
NIXON & VANDERHYE, PC
901 NORTH GLEBE ROAD, 11TH FLOOR
ARLINGTON, VA 22203

EXAMINER
HANLEY, SUSAN MARIE

ART UNIT	PAPER NUMBER
1651	

MAIL DATE	DELIVERY MODE
01/11/2011	PAPER

Please find below and/or attached an Office communication concerning this application or proceeding.

The time period for reply, if any, is set in the attached communication.

UNITED STATES PATENT AND TRADEMARK OFFICE

Commissioner for Patents
United States Patent and Trademark Office
P.O. Box 1450
Alexandria, VA 22313-1450
www.uspto.gov

JAN 1 1 2011

NIXON & VANDERHYE, PC
901 NORTH GLEBE ROAD, 11TH FLOOR
ARLINGTON VA 22203

In re Application of:	:
Moody et al.	:
Serial No.: 11/794,119	: PETITION DECISION
Filed: June 25, 2007	:
Attorney Docket No.: **MJW-4662-558**	:

This is in response to the petition under 37 CFR § 1.181, filed November 23, 2010, requesting that the finality of the Office action of October 12, 2010 be withdrawn because it was improper.

BACKGROUND

On March 30, 2010, the examiner mailed a non-final (final) Office action setting a three month statutory limit for reply. At the time of this Office action, claims 1-15 were pending. The examiner rejected claims 1-5, 7 and 8 under 35 USC 112, first paragraph, for lack of enablement. Claims 1, 3, 7 and 8 were rejected under 35 USC 102 (b) as being clearly anticipated by Van Dooren et al. Claims 1-4, 7 and 8 are rejected under 35 USC 103 (a) as being unpatentable over Van Dooren et al. Claims 1, 3 and 5-8 are rejected under 35 USC 103 (a) as being unpatentable over Van Dooren et al. as applied to instant claims 1, 3, 7 and 8 in further view of You et al. Claims 9-15 were withdrawn from consideration.

On June 30, 2010, applicants filed amendments to the claims and arguments traversing the examiner's rejections instituted in the non-final Office action of March 30, 2010.

On October 12, 2010, the examiner mailed a final Office action setting a three month statutory limit for reply. In this action, Claims 1-4, 7 and 8 were again rejected under 35 USC 103 (a) as being unpatentable over Van Dooren et al. Claims 1 and 3-8 are rejected under 35 USC 103 (a) as being unpatentable over Van Dooren et al. as applied to instant claims 1, 3, 4, 7 and 8, in further view of You et al. The examiner indicated that applicants' amendment necessitated the new grounds of rejection.

On November 23, 2010, applicants submitted the petition under consideration herein.

DISCUSSION

The petition and the file history have been carefully considered.

In the petition, applicants argue the "revision of claim 1 to include the limitation of claim 2, which was not previously subject to the rejection of the claims as obvious over Van Dooren et al in view of You et al, could not have necessitated the rejection of amended claim 1. Similarly, that revision of claim 1 did not necessitate the rejection in the October 12, 2010 Action of dependent claim 4, which was not rejected over the combination of Van Dooren et al in view of You et al in the March 3, 2010 Action."

Applicants' argument has been accorded careful consideration and is persuasive. Specifically, applicants' amendments did not necessitate the new rejection. MPEP § 706.07 recites:

> Under present practice, second or any subsequent actions on the merits shall be final, except where the examiner introduces a new ground of rejection that is neither necessitated by applicant's amendment of the claims nor based on information submitted in an information disclosure statement filed during the period set forth in 37 CFR 1.97(c) with the fee set forth in 37 CFR 1.17(p).
>
> Furthermore, a second or any subsequent action on the merits in any application or patent undergoing reexamination proceedings will not be made final if it includes a rejection, on newly cited art, other than information submitted in an information disclosure statement filed under 37 CFR 1.97(c) with the fee set forth in 37 CFR 1.17(p), of any claim not amended by applicant or patent owner in spite of the fact that other claims may have been amended to require newly cited art.

Thus, it is *not* proper for an office action to be made final when the examiner introduces a new ground of rejection that is neither necessitated by applicant's amendment of the claims nor based on information submitted in an information disclosure statement filed during the period set forth in 37 CFR 1.97(c).

DECISION

The petition is subsequently **GRANTED**.

The Office action mailed October 12, 2010 is hereby vacated to the extent that it was made "final" and the Office action is now considered to be a non-final Office action.

Should there be any questions about this decision please contact Quality Assurance Specialist Marianne C. Seidel, by letter addressed to Director, TC 1600, at the address listed above, or by telephone at 571-272-0584 or by facsimile sent to the general Office facsimile number, 571-273-8300.

JMStone

Jacqueline Stone
Director, Technology Center 1600

UNITED STATES PATENT AND TRADEMARK OFFICE

Commissioner for Patents
United States Patent and Trademark Office
P.O. Box 1450
Alexandria, VA 22313-1450
www.uspto.gov

THE NATH LAW GROUP
112 South West Street
Alexandria VA 22314

MAILED
NOV 12 2010
OFFICE OF PETITIONS

In re Application of	:	
David Ramati et al.	:	
Application No. 11/794,162	:	DECISION ON PETITION
Filed: July 12, 2007	:	TO WITHDRAW
Attorney Docket No. 28440U	:	FROM RECORD
	:	

This is a decision on the Request to Withdraw as attorney or agent of record under 37 C.F.R. § 1.36(b), filed October 20, 2010.

The request is **NOT APPROVED.**

The request can not be approved because the request is incomplete. It appears that page 2 containing the signature block and request for change of correspondence address is missing from the request. Applicant should file a renewed request which includes all of the pages.

Telephone inquiries concerning this decision should be directed to the undersigned at 571-272-4618.

/Kimberly Inabinet/

Kimberly Inabinet
Petitions Examiner
Office of Petitions

UNITED STATES PATENT AND TRADEMARK OFFICE

Commissioner for Patents
United States Patent and Trademark Office
P.O. Box 1450
Alexandria, VA 22313-1450
www.uspto.gov

THE NATH LAW GROUP
112 South West Street
Alexandria VA 22314

MAILED

JAN 10 2011

OFFICE OF PETITIONS

In re Application of	:	
David Ramati et al.	:	
Application No. 11/794,162	:	DECISION ON PETITION
Filed: July 12, 2007	:	TO WITHDRAW
Attorney Docket No. 28440U	:	FROM RECORD
	:	

This is a decision on the Request to Withdraw as attorney or agent of record under 37 C.F.R. § 1.36(b), filed December 28, 2010.

The request is **NOT APPROVED.**

The Office will no longer accept address changes to a new practitioner or law firm filed with a Request, absent the filing of a power of attorney to the new representative. The Office will either change the correspondence address of record to the most current address information provided for the assignee of the entire interest who properly became of record under 37 CFR 3.71 or, if no assignee of the entire interest has properly been made of record under 37 CFR 3.71, the most current address information provided for the first named inventor.

Accordingly, the request to withdraw from record cannot be approved because the request to change the correspondence address is not that of: (1) the first named inventor; or (2) an assignee of the entire interest under 37 C.F.R 3.71. If an assignee has ownership in this application, then a current Statement under 37 CFR 3.73(b) or a copy of the actual assignment must be provided with a renewed request.

All future communications from the Office will continue to be directed to the above-identified address until otherwise properly notified.

Telephone inquiries concerning this decision should be directed to the undersigned at 571-272-4618.

/Kimberly Inabinet/

Kimberly Inabinet
Petitions Examiner
Office of Petitions

UNITED STATES PATENT AND TRADEMARK OFFICE

Commissioner for Patents
United States Patent and Trademark Office
P.O. Box 1450
Alexandria, VA 22313-1450
www.uspto.gov

FITZPATRICK CELLA
HARPER & SCINTO
1290 AVENUE OF THE AMERICAS
NEW YORK NY 10104-3800

MAILED

SEP 02 2011

OFFICE OF PETITIONS

In re Application of	:	
Zinniger, et al.	:	
Application No. 11/794,241	:	DECISION
Filed/Deposited: 27 June, 2007	:	
Attorney Docket No. 02544.002095	:	

This is a decision on the petition filed on 23 August, 2011, for revival of an application abandoned due to unintentional delay pursuant to 37 C.F.R. §1.137(b).

NOTE:

Petitioner complained in the instant petition that—after the 17 December, 2010, mailing of the final Office action, and Petitioner's filing of an incomplete reply on 7 June, 2011 (*i.e.*, a request and fee for extension of time and a request for continued examination (RCE), but failure to file the required submission (e.g., an amendment in furtherance of prosecution) pursuant to 37 C.F.R. §1.114 and thus an improper RCE)—Petitioner did not receive a Notice of Improper RCE in the instant application as Petitioner had in an apparent companion case, Application No. 12/257,988 (the '988 application).

Petitioner, as one registered to practice before the Office, knew or should have known:

- The requirements for a proper RCE and the proper submission requirements under the Rules of Practice;[1]
- Each application is a separate application,[2] and a mailing in one application does not dictate or mandate a mailing in another; and
- The result of Petitioner's failure to timely and properly reply[3] to an Office action must be the abandonment of the application by operation of law.[4]

[1] Pursuant to the regulations at 37 C.F.R. §1.114.

[2] Pursuant to the regulations at 37 C.F.R. §1.4(b).

Petitioner's protestations notwithstanding, the record reveals that Petitioner failed to reply timely and properly to the 17 December, 2010, final Office action and the application went abandoned by operation of law after midnight 17 June, 2011.

The petition pursuant to 37 C.F.R. §1.137(b) is **GRANTED**.

As to the Allegations
of Unintentional Delay

The requirements of a grantable petition pursuant to 37 C.F.R. §1.137(b) are the petition and fee therefor, a reply, a proper statement and/or showing of unintentional delay under the regulation, and, where applicable, a terminal disclaimer and fee

Petitioners' attentions always are directed to the guidance in the Commentary at MPEP §711.03(c)(II).

BACKGROUND

The record reflects as follows:

Petitioner failed to reply timely and properly to the final Office action mailed on 17 December, 2010, with reply due absent extension of time on or before 17 March, 2010.

On 7 June, 2011, Petitioner filed a request and fee for extension of time and a request for continued examination (RCE), but failed to file the required submission (e.g., an amendment in furtherance of prosecution) pursuant to 37 C.F.R. §1.114—thus, Petitioner filed an improper RCE.

The application went abandoned by operation of law after midnight 17 June, 2011.

It does not appear that the Office mailed a Notice of Abandonment before a petition was filed.

On 23 August, 2011, Petitioner filed, *inter alia*, a petition (with fee) pursuant to 37 C.F.R. §1.137(b) with a reply in the form of, *inter alia*, (the previously filed) request (with fee) for continued examination (RCE), this time with a submission in the form of an amendment pursuant to 37 C.F.R. §1.114, and made the statement of unintentional delay.

---

[3] A proper reply is an amendment *prima facie* placing the application in condition for allowance, a Notice of Appeal, or an RCE (with fee and submission under 37 C.F.R. §1.114). (See: MPEP §711.03(c).)

[4] Pursuant to the regulations at 37 C.F.R. §1.135.

Petitioners' attentions always are directed to the guidance in the Commentary at MPEP §711.03(c) as to the showing regarding unintentional delay and a petition pursuant to 37 C.F.R. §1.137(b).

The availability of applications and application papers online to applicants/practitioners who diligently associate their Customer Number with the respective application(s) now provides an applicant/practitioner on-demand information as to events/transactions in an application.

Out of an abundance of caution, Petitioners always are reminded that those registered to practice and all others who make representations before the Office **must** inquire into the underlying facts of representations made to the Office and support averments with the appropriate documentation–since all owe to the Office the continuing duty to disclose.[5]

STATUTES, REGULATIONS AND ANALYSIS

Congress has authorized the Commissioner to revive an application if the delay is shown to the satisfaction of the Commissioner to have been "unavoidable." 35 U.S.C. §133 (1994).[6]
The regulations at 37 C.F.R. §1.137(a) and (b) set forth the requirements for a Petitioner to revive a previously unavoidably or unintentionally, respectively, abandoned application under this congressional grant of authority.

Unintentional delays are those that do not satisfy the very strict statutory and regulatory requirements of unavoidable delay, and, by definition, are not intentional.[7]))

As to Allegations of Unintentional Delay

The requirements of a grantable petition pursuant to 37 C.F.R. §1.137(b) are the petition and fee therefor, a reply, a proper statement of unintentional delay under the regulation, and, where applicable, a terminal disclaimer and fee.

It appears that the requirements under the rule have been satisfied.

---

[5] See supplement of 17 June, 1999. The Patent and Trademark Office is relying on petitioner's duty of candor and good faith and accepting a statement made by Petitioner. See Changes to Patent Practice and Procedure, 62 Fed. Reg. at 53160 and 53178, 1203 Off. Gaz. Pat. Office at 88 and 103 (responses to comments 64 and 109)(applicant obligated under 37 C.F.R. §10.18 to inquire into the underlying facts and circumstances when providing statements to the Patent and Trademark Office).

[6] 35 U.S.C. §133 provides:

35 U.S.C. §133 Time for prosecuting application.
Upon failure of the applicant to prosecute the application within six months after any action therein, of which notice has been given or mailed to the applicant, or within such shorter time, not less than thirty days, as fixed by the Commissioner in such action, the application shall be regarded as abandoned by the parties thereto, unless it be shown to the satisfaction of the Commissioner that such delay was unavoidable.

[7] Therefore, by example, an unintentional delay in the reply might occur if the reply and transmittal form are to be prepared for shipment by the US Postal Service, but other pressing matters distract one's attention and the mail is not timely deposited for shipment.

CONCLUSION

Accordingly, the petition pursuant to 37 C.F.R. §1.137(b) is **granted**.

The instant application is released to the Technology Center/AU 3725 for further processing in due course.

Petitioner may find it beneficial to view Private PAIR within a fortnight of the instant decision to ensure that the revival has been acknowledged by the TC/AU in response to this decision. It is noted that all inquiries with regard to status need be directed to the TC/AU where that change of status must be effected—that does not occur in the Office of Petitions.

Telephone inquiries regarding this decision may be directed to the undersigned at (571) 272-3214—it is noted, however , that all practice before the Office is in writing (see: 37 C.F.R. §1.2[8]) and the proper authority for action on any matter in this regard are the statutes (35 U.S.C.), regulations (37 C.F.R.) and the commentary on policy (MPEP). Therefore, no telephone discussion may be controlling or considered authority for Petitioner's action(s).

/John J. Gillon, Jr./
John J. Gillon, Jr.
Senior Attorney
Office of Petitions

---

[8] The regulations at 37 C.F.R. §1.2 provide:
§1.2 Business to be transacted in writing.
All business with the Patent and Trademark Office should be transacted in writing. The personal attdance of applicants or their attorneys or agents at the Patent and Trademark Office is unnecessary. The action of the Patent and Trademark Office will be based exclusively on the written record in the Office. No attention will be paid to any alleged oral promise, stipulation, or understanding in relation to which there is disagreement or doubt.

Doc Code: PET.AUTO Document Description: Petition automatically granted by EFS-Web	PTO/SB/64 U.S. Patent and Trademark Office Department of Commerce

Electronic Petition Request	PETITION FOR REVIVAL OF AN APPLICATION FOR PATENT ABANDONED UNINTENTIONALLY UNDER 37 CFR 1.137(b)
Application Number	11794268
Filing Date	26-Jun-2007
First Named Inventor	Won Seo
Art Unit	2874
Examiner Name	TINA WONG
Attorney Docket Number	1834-5
Title	SHADING DEVICE FOR WELDING HELMET

The above-identified application became abandoned for failure to file a timely and proper reply to a notice or action by the United States Patent and Trademark Office. The date of abandonment is the day after the expiration date of the period set for reply in the office notice or action plus any extensions of time actually obtained.

APPLICANT HEREBY PETITIONS FOR REVIVAL OF THIS APPLICATION

NOTE: A grantable petition requires the following items:
(1) Petition fee;
(2) Reply and/or issue fee;
(3) Terminal disclaimer with disclaimer fee – required for all utility and plant applications filed before June 8, 1995; and for all design applications;
(4) Statement that the entire delay was unintentional.

Petition fee
The petition fee under 37CFR 1.17(m) is attached.

☐ Applicant claims SMALL ENTITY status. See 37 CFR 1.27.

☐ Applicant is no longer claiming SMALL ENTITY status. See 37 CFR 1.27(g)(2).

☒ Applicant(s) status remains as SMALL ENTITY.

☐ Applicant(s) status remains as other than SMALL ENTITY.

Issue Fee and Publication Fee :

Issue Fee and Publication Fee must accompany ePetition.

☒ Issue Fee Transmittal is attached

Drawing corrections and/ or other deficiencies.

- (●) Drawing corrections and/ or other deficiencies are not required
- ( ) I certify, in accordance with 37 CFR 1.4.(D)(4), that drawing corrections and/ or other deficiencies have previously been filed on
- ( ) Drawing corrections and/ or other deficiencies are attached.
- [x] STATEMENT: The entire delay in filing the required reply from the due date for the required reply until the filing of a grantable petition under 37 CFR 1.137(b) was unintentional.

THIS PORTION MUST BE COMPLETED BY THE SIGNATORY OR SIGNATORIES

I certify, in accordance with 37 CFR 1.4(d)(4) that I am:

- (●) An attorney or agent registered to practice before the Patent and Trademark Office who has been given power of attorney in this application.
- ( ) An attorney or agent registered to practice before the Patent and Trademark Office, acting in a representative capacity.
- ( ) A sole inventor
- ( ) A joint inventor; I certify that I am authorized to sign this submission on behalf of all of the inventors.
- ( ) A joint inventor; all of whom are signing this e-petition.
- ( ) The assignee of record of the entire interest that has properly made itself of record pursuant to 37 CFR 3.71.

Signature	/Thomas M. Galgano/
Name	Thomas M. Galgano
Registration Number	27638

UNITED STATES PATENT AND TRADEMARK OFFICE

Commissioner for Patents
United States Patent and Trademark Office
P.O. Box 1450
Alexandria, VA 22313-1450
www.uspto.gov

Decision Date : August 29,2011

In re Application of :

Won Seo

Application No : 11794268

Filed : 26-Jun-2007

Attorney Docket No : 1834-5

DECISION ON PETITION

UNDER CFR 1.137(b)

This is an electronic decision on the petition under 37 CFR 1.137(b), filed August 29,2011 , to revive the above-identified application.

The petition is **GRANTED.**

The above-identified application became abandoned for failure to reply in a timely manner to the Notice of Allowance and Issue Fee(s) Due. The date of abandonment is the day after the expiration date of the period set for reply in the Notice.

The electronic petition satisfies the conditions for revival pursuant to the provisions of 37 CFR 1.137(b) in that (1) the reply in the form of payment of the Issue Fee and the Publication Fee (if necessary); (2) the petition fee as set forth in 37 CFR 1.17 (m); (3) the drawing correction and/or other deficiencies (if necessary); and (4) the required statement of unintentional delay have been received. Accordingly, the Issue Fee payment is accepted as having been unintentionally delayed.

Telephone inquiries concerning this decision should be directed to the Patent Electronic Business Center (EBC) at 866-217-9197.

This application file is being directed to the Office of Data Management.

Office of Petitions

UNITED STATES PATENT AND TRADEMARK OFFICE

UNITED STATES DEPARTMENT OF COMMERCE
United States Patent and Trademark Office
Address: COMMISSIONER FOR PATENTS
P.O. Box 1450
Alexandria, Virginia 22313-1450
www.uspto.gov

APPLICATION NO.	FILING DATE	FIRST NAMED INVENTOR	ATTORNEY DOCKET NO.	CONFIRMATION NO.
11/794,287	06/26/2007	Yang Kook Sun	304-6	9422

24336 7590 01/11/2011
TUTUNJIAN & BITETTO, P.C.
425 Broadhollow Road, Suite 302
Melville, NY 11747

EXAMINER
YANCHUK, STEPHEN J

ART UNIT	PAPER NUMBER
1729	

MAIL DATE	DELIVERY MODE
01/11/2011	PAPER

Please find below and/or attached an Office communication concerning this application or proceeding.

The time period for reply, if any, is set in the attached communication.

UNITED STATES PATENT AND TRADEMARK OFFICE

Commissioner for Patents
United States Patent and Trademark Office
P.O. Box 1450
Alexandria, VA 22313-1450
www.uspto.gov

BC

January 11, 2011

In re application of Yang Kook Sun et al. Serial No. 11/794,287 Filed: June 26, 2007 For: DOUBLE-LAYER CATHODE ACTIVE MATERIALS FOR LITHIUM SECONDARY BATTERIES, METHOD FOR PREPARING THE ACTIVE MATERIALS, AND LITHIUM SECONDARY BATTERIES USING THE ACTIVE MATERIALS	:	DECISION ON REQUEST TO PARTICIPATE IN PATENT PROSECUTION HIGHWAY PROGRAM AND PETITION TO MAKE SPECIAL UNDER 37 CFR 1.102(a)

This is a decision on the request for reconsideration to participate in the Patent Prosecution Highway (PPH) program and the petition under 37 CFR 1.102(a) to make the above-identified application special filed October 29, 2010.

The request and petition are **GRANTED**.

A grantable request to participate in the PPH program and petition to make special require:

(1) The U.S. application must validly claim priority under 35 U.S.C. 119(a) to one or more applications filed in the KIPO, note where the KIPO application with similar claims is not the same application from which the U.S. application claims priority that the applicant must identify the relationship between the KIPO application with similar claims and the KIPO priority application;

(2) Applicant must submit a copy of:
   a. The allowable/patentable claim(s) from the KIPO application(s);
   b. An English translation of the allowable/ patentable claim(s); and
   c. A statement that the English translation is accurate;

(3) Applicant must:
   a. Ensure all the claims in the U.S. application must sufficiently correspond or be amended to sufficiently correspond to the allowable/patentable claim(s) in the KIPO application(s); and
   b. Submit a claims correspondence table in English;

(4) Examination of the U.S. application has not begun;

(5) Applicant must submit a copy of:
   a. All of the Office actions from each of the KIPO application(s) containing the allowable/patentable claim(s) that are the basis for the request;
   b. An English language translation of the KIPO Office actions from (5)(a) above; and
   c. A statement that the English translation is accurate; and

(6) Applicant must submit:
   a. An IDS listing the documents cited by the KIPO examiner in the KIPO office action (unless already submitted in this application)
   b. Copies of documents except U.S. patents or U.S. patent application publications (unless already submitted in this application).

The request to participate in the PPH program and petition comply with the above requirements. Accordingly, the above-identified application has been accorded "special" status.

The application is being forwarded to the examiner for action on the merits commensurate with this decision.

Any inquiry regarding this decision should be directed to Blaine Copenheaver, Quality Assurance Specialist, at (571) 272-1156.

All other inquiries concerning the examination or status of the application is accessible in the PAIR system at http://www.uspto.gov/ebc/index.html.

/Blaine Copenheaver/

Blaine Copenheaver
Quality Assurance Specialist
Technology Center 1700

UNITED STATES PATENT AND TRADEMARK OFFICE

Commissioner for Patents
United States Patent and Trademark Office
P.O. Box 1450
Alexandria, VA 22313-1450
www.uspto.gov

BUCHANAN, INGERSOLL & ROONEY PC
POST OFFICE BOX 1404
ALEXANDRIA, VA 22313-1404

MAILED
FEB 10 2012
OFFICE OF PETITIONS

In re Application of Paul Gioia :
Application No. 11/794,297 : Decision on Petition
371(c) Filing Date: July 29, 2008 :
Attorney Docket No. 1022702-000182 :

This is a decision on the petition under 37 CFR 1.137(b) filed January 5, 2012, to revive the above-identified application.

The petition is **granted**.

The above-identified application became abandoned for failure to reply in a timely manner to the non-final Office action including a requirement for restriction/election issued June 9, 2011, which set a shortened statutory period for reply of one (1) month or thirty (30) days (whichever is later). An extension of time under the provisions of 37 CFR 1.136(a) was not obtained. Accordingly, the above-identified application became abandoned on Tuesday, July 12, 2011.

A grantable petition under 37 CFR 1.137(b) must be accompanied by:

(1) The reply required to the outstanding Office action or notice, unless previously filed,
(2) The petition fee, and
(3) A statement that the entire delay in filing the required reply from the due date for the reply until the filing of a grantable petition pursuant to 37 CFR 1.137(b) was unintentional.[1]

The petition satisfies the requirements of 37 CFR 1.137(b) in so far as petitioner has supplied (1) a reply to the June 9, 2011 Office action, (2) the required petition fee of $1,860, and (3) the required statement of unintentional delay. Therefore, the petition is granted and the application is revived.

[1] A terminal disclaimer is also necessary if the application is a design application or if the application was filed on or before June 8, 1995.

Martin A. Bruehs, the individual who signed the petition, does not appear to have been an attorney or agent of record at the time the application became abandoned. Therefore, it appears Mr. Bruehs may not have been in a position to have firsthand or direct knowledge of the facts and circumstances of the delay. Nevertheless, the statement by Mr. Bruehs that the entire delay was unintentional is being treated as having been made as the result of a reasonable inquiry into the facts and circumstances of such delay.[2] In the event that such an inquiry has not been made, petitioner must make such an inquiry. If such inquiry results in the discovery that a portion of the delay from the due date for the reply until the filing of a grantable petition pursuant to 37 CFR 1.137(b) was intentional, petitioner must notify the Office.

There is no indication it the record that Mr. Bruehs has been given a power of attorney or authorization of agent to prosecute the above-identified application. If Mr. Bruehs wishes to receive future correspondence regarding this application, the appropriate power of attorney or authorization of agent must be submitted. While a courtesy copy of this decision is being mailed to Mr. Bruehs at the address identified in the petition, all future correspondence will be directed solely to the address currently of record until such time as appropriate instructions are received to the contrary.

The petition includes a payment of $2,690 for a five-month extension of time. Payment for an extension of time is unnecessary for relief to be granted under 37 CFR 1.137(b). *See* MPEP 711.03(c)(II)(A). Therefore, the $2,690 extension of time fee has been credited back to the credit card used to pay the fee.

Technology Center Art Unit 1617 will be informed of the instant decision and the application will be further examined in due course.

Telephone inquiries regarding this communication should be directed to Petitions Attorney Steven Brantley at (571) 272-3203.

Charles Steven Brantley
Senior Petitions Attorney
Office of Petitions

cc: Martin A. Bruehs
1737 King Street
Alexandria, VA 22314

[2] *See* Changes to Patent Practice and Procedure, 62 *Fed. Reg.* at 53160 and 53178; 1203 *Off. Gaz. Pat. Office* at 88 and 103 (responses to comments 64 and 109) (applicant obligated under 37 CFR 10.18 to inquire into the underlying facts and circumstances when providing the statement required by 37 CFR 1.137(b) to the Patent and Trademark Office).

UNITED STATES PATENT AND TRADEMARK OFFICE

Commissioner for Patents
United States Patent and Trademark Office
P.O. Box 1450
Alexandria, VA 22313-1450
www.uspto.gov

Decision Date : October 25,2011

In re Application of :

Markku Pulkkinen

DECISION ON PETITION

UNDER CFR 1.313(c)(2)

Application No : 11794421

Filed : 27-Jun-2007

Attorney Docket No : KOL.238.WUS

This is an electronic decision on the petition under 37 CFR 1.313(c)(2), filed October 25,2011 , to withdraw the above-identified application from issue after payment of the issue fee.

The petition is **GRANTED.**

The above-identified application is withdrawn from issue for consideration of a submission under 37 CFR 1.114 (request for continued examination). See 37 CFR 1.313(c)(2).

Petitioner is advised that the issue fee paid in this application cannot be refunded. If, however, this application is again allowed, petitioner may request that it be applied towards the issue fee required by the new Notice of Allowance.

Telephone inquiries concerning this decision should be directed to the Patent Electronic Business Center (EBC) at 866-217-9197.

This application file is being referred to Technology Center AU 2453 for processing of the request for continuing examination under 37 CFR 1.114 .

Office of Petitions

Doc Code: PET.AUTO Document Description: Petition automatically granted by EFS-Web	PTO/SB/140 U.S. Patent and Trademark Office Department of Commerce

Electronic Petition Request	**PETITION TO WITHDRAW AN APPLICATION FROM ISSUE AFTER PAYMENT OF THE ISSUE FEE UNDER 37 CFR 1.313(c)**
Application Number	11794421
Filing Date	27-Jun-2007
First Named Inventor	Markku Pulkkinen
Art Unit	2453
Examiner Name	KRISNA LIM
Attorney Docket Number	KOL.238.WUS
Title	USE OF CONFIGURATIONS IN DEVICE WITH MULTIPLE CONFIGURATIONS

An application may be withdrawn from issue for further action upon petition by the applicant. To request that the Office withdraw an application from issue, applicant must file a petition under this section including the fee set forth in § 1.17(h) and a showing of good and sufficient reasons why withdrawal of the application from issue is necessary.

APPLICANT HEREBY PETITIONS TO WITHDRAW THIS APPLICATION FROM ISSUE UNDER 37 CFR 1.313(c).

A grantable petition requires the following items:
(1) Petition fee; and
(2) One of the following reasons:
(a) Unpatentability of one or more claims, which must be accompanied by an unequivocal statement that one or more claims are unpatentable, an amendment to such claim or claims, and an explanation as to how the amendment causes such claim or claims to be patentable;
(b) Consideration of a request for continued examination in compliance with § 1.114 (for a utility or plant application only); or
(c) Express abandonment of the application. Such express abandonment may be in favor of a continuing application, but not a CPA under 37 CFR 1.53(d).

Petition Fee

☐ Applicant claims SMALL ENTITY status. See 37 CFR 1.27.

☐ Applicant is no longer claiming SMALL ENTITY status. See 37 CFR 1.27(g)(2).

☐ Applicant(s) status remains as SMALL ENTITY.

☒ Applicant(s) status remains as other than SMALL ENTITY

Reason for withdrawal from issue

○ One or more claims are unpatentable

◉ Consideration of a request for continued examination (RCE) (List of Required Documents and Fees)

○ Applicant hereby expressly abandons the instant application (any attorney/agent signing for this reason must have power of attorney pursuant to 37 CFR 1.32(b)).

RCE request,submission, and fee.

☒ I certify, in accordance with 37 CFR 1.4(d)(4) that : The RCE request ,submission, and fee have already been filed in the above-identified application on 2011.10.26

☐ Are attached.

THIS PORTION MUST BE COMPLETED BY THE SIGNATORY OR SIGNATORIES

I certify, in accordance with 37 CFR 1.4(d)(4) that I am:

◉ An attorney or agent registered to practice before the Patent and Trademark Office who has been given power of attorney in this application.

○ An attorney or agent registered to practice before the Patent and Trademark Office, acting in a representative capacity.

○ A sole inventor

○ A joint inventor; I certify that I am authorized to sign this submission on behalf of all of the inventors

○ A joint inventor; all of whom are signing this e-petition

○ The assignee of record of the entire interest that has properly made itself of record pursuant to 37 CFR 3.71

Signature	/Erin Nichols Matkaiti/
Name	Erin Nichols Matkaiti
Registration Number	57125

UNITED STATES PATENT AND TRADEMARK OFFICE

Commissioner for Patents
United States Patent and Trademark Office
P.O. Box 1450
Alexandria, VA 22313-1450
www.uspto.gov

Pearl Cohen Zedek Latzer, LLP
1500 Broadway
12th Floor
New York NY 10036

MAILED
SEP 13 2010
OFFICE OF PETITIONS

In re Application of	:	
Gavriel J. Iddan	:	
Application No. 11/794,423	:	ON PETITION
Filed: June 28, 2007	:	
Attorney Docket No. P-7310-US	:	

This is a decision on the petition under the unintentional provisions of 37 CFR 1.137(b), filed August 25, 2010, to revive the above-identified application.

The petition is **GRANTED**.

The application became abandoned for failure to timely file a reply within the meaning of 37 CFR 1.113 to the final Office action of February 22, 2010. The proposed reply required for consideration of a petition to revive must be a Notice of Appeal (and appeal fee required by 37 CFR 41.20(b)(2), an amendment that *prima facie* places the application in condition for allowance, a Request for Continued Examination and submission (37 CFR 1.114), or the filing of a continuing application under 37 CFR 1.53(b). See MPEP 711.03(c)(III)(A)(2). No extensions of time pursuant to the provisions of 37 CFR 1.136(a) were obtained. Accordingly, the date of abandonment of this application is May 23, 2010.

The petition satisfies the requirements of 37 CFR 1.137(b) in that petitioner has supplied (1) the reply in the form of a Request for Continued Examination (RCE) and fee of $810, and the submission required by 37 CFR 1.114; (2) the petition fee of $1,620; and (3) a proper statement of unintentional delay.

Telephone inquiries concerning this decision should be directed to the undersigned at (571) 272-2991.

This application is being referred to Technology Center AU 3768 for processing of the RCE and for appropriate action by the Examiner in the normal course of business on the amendment submitted in accordance with 37 CFR 1.114.

/Terri Johnson/
Terri Johnson
Petitions Examiner
Office of Petitions

UNITED STATES PATENT AND TRADEMARK OFFICE

Commissioner for Patents
United States Patent and Trademark Office
P.O. Box 1450
Alexandria, VA 22313-1450
www.uspto.gov

DRINKER BIDDLE & REATH (DC)
1500 K STREET, N.W.
SUITE 1100
WASHINGTON DC 20005-1209

MAILED
MAR 08 2012
PCT LEGAL ADMINISTRATION

In re Application of	:	
MARTIN, Hans Göran Evald	:	
Application No.: 11/794,460	:	DECISION ON
PCT No.: PCT/SE2005/001871	:	
Int. Filing Date: 08 December 2005	:	PETITION
Priority Date: 29 December 2004	:	
Attorney Docket No.: 204814-0004 (450717)	:	UNDER 37 CFR 1.182
For: GAS DETECTING ARRANGEMENT	:	

This decision is in response to applicant's petition under 37 CFR 1.182, filed in the United States Patent and Trademark Office on 11 January 2012.

BACKGROUND

On 28 June 2007, applicants filed a transmittal letter to enter the national phase under 35 USC 371, accompanied by, *inter alia*, a PCT Rule 4.17 declaration that had been furnished for this application during the international phase.

On 27 September 2007, applicants filed a Communication requesting the filing receipt and enclosed a copy of new declaration of the inventor.

On 19 October 2007, the Office issued a filing receipt reflecting the inventor's name as listed on the 27 September 2007 declaration, "Hans Evald Göran Martin," but listing the 371(c) date as 28 June 2007.

On 11 January 2012, applicants filed this petition under 37 CFR 1.182 indicating that inventor Martin's name was as indicated on the PCT Rule 4.17 declaration and included an application data sheet and a third declaration.

On 22 February 2012, the Office mailed a second filing receipt listing the inventor as "Hans Goran Evald Martin".

DISCUSSION

Applicants have explained that the inventor was corrected identified on the international application as "Hans Göran Evald Martin" and that the second declaration rearranging his given names was in error. The $400 petition fee has been paid.

CONCLUSION

Applicant's petition under 37 CFR 1.182 to correct applicant's name is **GRANTED**.

This application is being referred to the national phase processing branch of the Office of Patent Application Processing for further action consistent with this decision.

/Erin P. Thomson/

Erin P. Thomson
Attorney Advisor
PCT Legal Administration

Telephone: 571-272-3292

UNITED STATES PATENT AND TRADEMARK OFFICE

Commissioner for Patents
United States Patent and Trademark Office
P.O. Box 1450
Alexandria, VA 22313-1450
www.uspto.gov

BLANK ROME LLP
WATERGATE
600 NEW HAMPSHIRE AVENUE, N.W.
WASHINGTON, DC 20037

MAILED

AUG 23 2010

OFFICE OF PETITIONS

In re Application of
Katherine Meyer-Siegler, et al.
Application No. 11/794,464
Filed: October 27, 2008
Attorney Docket No. 111828-00147

DECISION ON PETITION
TO WITHDRAW
FROM RECORD

This is a decision on the Request to Withdraw as attorney or agent of record under 37 C.F.R. § 1.36(b), filed July 27, 2010.

The request is **APPROVED**.

A grantable request to withdraw as attorney/agent of record must be signed by every attorney/agent seeking to withdraw or contain a clear indication that one attorney is signing on behalf of another/others.

The request was signed by Minh-Quan K. Pham on behalf of all attorneys of record who are associated with customer No. 27557. All attorneys/agents associated with the Customer Number 27557 have been withdrawn. Applicant is reminded that there is no attorney of record at this time.

The request to change the correspondence of record is not acceptable as the requested correspondence address is not that of: (1) the first named signing inventor; or (2) an intervening assignee of the entire interest under 37 C.F.R 3.71. All future communications from the Office will be directed to the first named signing inventor at the first copied address below until otherwise properly notified by the applicant.

In order to request or take action in a patent matter, the assignee must establish its ownership of the patent to the satisfaction of the Director. In this regard, a Statement under 37 CFR 3.73(b) must have either: (i) documentary evidence of a chain of title from the original owner to the assignee (*e.g.*, copy of an executed assignment), and a statement affirming that the documentary evidence of the chain of title from the original owner to the assignee was or concurrently is being submitted for recordation pursuant to § 3.11; or (ii) a statement specifying where documentary evidence of a chain of title from the original owner to the assignee is recorded in the assignment records of the Office (*e.g.*, reel and frame number).

There is an outstanding Office action mailed July 2, 2010 that requires a reply from applicant.

Telephone inquiries concerning this decision should be directed to undersigned at 571-272-1642. All other inquiries concerning the examination or status of this application should be directed to the Technology Center.

/AMW/
April M. Wise
Petitions Examiner
Office of Petitions

cc: KATHERINE MEYER-SIEGLER
9169 79TH AVENUE
SEMINOLE, FL 33777

cc: UNITED STATEM OF AMERICA AS REPRESENTED
BY THE DEPT OF VETERANS AFFAIRS
TECHNOLOGY TRANSFER PROGRAM, OFFICE
OF RESEARCH AND DEVELOPMENT
810 VERMONT AVENUE, NW
WASHINGTON, DC 20420

UNITED STATES PATENT AND TRADEMARK OFFICE

UNITED STATES DEPARTMENT OF COMMERCE
United States Patent and Trademark Office
Address: COMMISSIONER FOR PATENTS
P.O. Box 1450
Alexandria, Virginia 22313-1450
www.uspto.gov

APPLICATION NUMBER	FILING OR 371(C) DATE	FIRST NAMED APPLICANT	ATTY. DOCKET NO./TITLE
11/794,464	10/27/2008	Katherine Meyer-Siegler	111828-00147

CONFIRMATION NO. 2751

POWER OF ATTORNEY NOTICE

27557
BLANK ROME LLP
WATERGATE
600 NEW HAMPSHIRE AVENUE, N.W.
WASHINGTON, DC 20037

OC000000043100595

Date Mailed: 08/18/2010

NOTICE REGARDING CHANGE OF POWER OF ATTORNEY

This is in response to the Power of Attorney filed 07/27/2010.

- The withdrawal as attorney in this application has been accepted. Future correspondence will be mailed to the new address of record. 37 CFR 1.33.

/amwise/

Office of Data Management, Application Assistance Unit (571) 272-4000, or (571) 272-4200, or 1-888-786-0101

SPE RESPONSE FOR CERTIFICATE OF CORRECTION

Paper No.:20120118

DATE : January 18, 2012

TO SPE OF : ART UNIT 2617

SUBJECT : Request for Certificate of Correction on Patent No.: 7,920,501

A response is requested with respect to the accompanying request for a certificate of correction.

Please complete this form and return with file, within **7** days to:
Certificates of Correction Branch - ST (South Tower) 9A22
Palm location **7590** - Tel. No. (703) 305-8309

With respect to the change(s) requested, correcting Office and/or Applicant's errors, should the patent read as shown in the certificate of correction? No new matter should be introduced, nor should the scope or meaning of the claims be changed.

Thank You For Your Assistance **Certificates of Correction Branch**

The request for issuing the above-identified correction(s) is hereby:

Note your decision on the appropriated box.

☒ **Approved** All changes apply.

☐ **Approved in Part** Specify below which changes **do not** apply.

☐ **Denied** State the reasons for denial below.

Comments:

/DWAYNE BOST/
Supervisory Patent Examiner.Art Unit 2617

UNITED STATES PATENT AND TRADEMARK OFFICE

Commissioner for Patents
United States Patent and Trademark Office
P.O. Box 1450
Alexandria, VA 22313-1450
www.uspto.gov

FOLEY AND LARDNER LLP
SUITE 500
3000 K STREET NW
WASHINGTON DC 20007

MAILED

SEP 20 2010

OFFICE OF PETITIONS

In re Application	:
Joel Fournier	: DECISION ON APPLICATION FOR
Application No. 11/794,619	: PATENT TERM ADJUSTMENT
Filed: July 3, 2007	:
Attorney Docket No. 026032-5293	:
	:

This letter is in response to the "REQUEST FOR RECONSIDERATION OF PATENT TERM ADJUSTMENT FOR PATENT APPLICATION UNDER 37 C.F.R. §1.705(b)", filed May 12, 2010. Applicant requests that the initial determination of patent term adjustment under 35 U.S.C. 154(b) be corrected from zero (0) days to three hundred twenty-nine (329) days.

The application for patent term adjustment is **DISMISSED**.

On February 16, 2010, the Office mailed the Determination of Patent Term Adjustment under 35 U.S.C. 154(b) in the above identified application. The Notice stated that the patent term adjustment (PTA) to date is zero (0) days. On May 12, 2010, Applicant timely[1] submitted an application for patent term adjustment, asserting that the correct number of days of PTA at the time of the mailing of the Notice of Allowance is three hundred twenty-nine (329) days.

Applicant does not state whether the patent issuing from the application is subject to a terminal disclaimer.

The Office initially determined a patent term adjustment of zero (0) days based on an adjustment for PTO delay of one (1) day pursuant to 35 U.S.C. 154(b)(1)(A)(i) and 37 C.F.R. § 1.703(a)(1), reduced by Applicant's delay of thirty (30) days,

---

[1] Applicant filed the application for patent term adjustment on the same date as the issue fee.

pursuant to 35 U.S.C. 154(b)(2)(C)(iii) and 37 C.F.R. § 1.704(b). The one day of PTO delay is at issue.

Applicant argues that the Office should have used the national stage entry date (July 3, 2007) as the start date used to calculate the PTO delay under 37 CFR 1.703(a)(1).

Applicant's argument has been considered, but is not persuasive. MPEP 1893.03(b) states:

> The "Date of Completion of all 35 U.S.C. 371 Requirements" included on the NOTIFICATION OF ACCEPTANCE OF APPLICATION UNDER 35 U.S.C. 371 AND 37 CFR 1.495 (Form PCT/DO/EO/903) is relevant for purposes of patent term adjustment under 35 U.S.C. 154(b)(1)(A)(i)(II) and 37 CFR 1.702(a)(1) when the USPTO has failed to mail at least one of a notification under 35 U.S.C. 132 or a notice of allowance under 35 U.S.C. 151 not later than fourteen months after the date on which the requirements under 35 U.S.C. 371 were fulfilled.

Accordingly, the Office properly used the "Date of Completion" of June 27, 2008 in calculating PTO delay under 37 CFR 1.703(a)(1).

In view thereof, the correct determination of patent term adjustment at the time of the mailing of the Notice of Allowance is **zero (0)** days (1 days of PTO delay reduced by 30 days of applicant delay).

Receipt of the $200.00 fee set forth in 37 CFR 1.18(e) is acknowledged. Applicant's request for a refund is denied.[2]

The application file is being forwarded to the Office of Data Management for processing into a patent.

Telephone inquiries specific to this matter should be directed to Cliff Congo, Petitions Attorney, at (571)272-3207.

Anthony Knight
Director
Office of Petitions

---

[2] See Comment 1 in Changes to Implement Patent Term Adjustment under Twenty-Year Patent Term; Final Rule, 1239 OG 14, 65 Fed. Reg. 54366 (Oct. 3 2000) (stating that the fee set forth in 37 C.F.R. 1.18(e) is charged to allow the Office to recover the estimated average cost of treating applications for patent term adjustment, and is not refundable even in the event of Office error).

UNITED STATES PATENT AND TRADEMARK OFFICE

Commissioner for Patents
United States Patent and Trademark Office
P.O. Box 1450
Alexandria, VA 22313-1450
www.uspto.gov

FOLEY AND LARDNER LLP
SUITE 500
3000 K STREET NW
WASHINGTON DC 20007

MAILED

MAR 28 2011

OFFICE OF PETITIONS

In re Application of	:
Joel Fournier	: DECISION ON APPLICATION
Application No. 11/794,619	: FOR PATENT TERM ADJUSTMENT
Filed: July 3, 2007	: AND NOTICE OF INTENT
Patent No. 7,814,859	: TO ISSUE CERTIFICATE
Issued: October 19, 2010	: OF CORRECTION
Attorney Docket No. 026032-5293	:

This decision is in response to the "REQUEST FOR RECONSIDERATION OF PATENT TERM ADJUSTMENT FOR PATENT UNDER 37 CFR §1.705(d)", filed December 17, 2010, requesting that the patent term adjustment indicated on the patent be corrected from seventy-seven (77) days to four hundred twenty-one (421) days.

The request for correction of the patent term adjustment (PTA) is **GRANTED** to the extent indicated herein.

On October 19, 2010, the above-identified application issued into Patent No. 7,814,859 with a patent term adjustment of seventy-seven (77) days. On December 17, 2010, Patentee filed the instant application for patent term adjustment.

The Office determined a patent term adjustment of 77 days based on an adjustment for PTO delay of 1 day, pursuant to 37 CFR 1.703(a)(1), 37 days pursuant to 37 CFR 1.703(a)(4), and 106 days pursuant to 37 CFR 1.703(b), reduced by Applicant's delay of 30 days under 37 CFR § 1.704(b). The adjustment of 1 and 106 days is at issue.

The Office originally determined delay under 37 CFR 1.703(a)(1) using a commencement date of June 27, 2008. This is the date that was 30 months from the filing of the PCT application, filed December 27, 2005. However, in his Request for Corrected Filing Receipt, filed May 12, 2010, applicant pointed out that the Office failed to include a priority claim to a French application filed on January 5, 2005. This claim was included on the corrected filing receipt mailed on June 2, 2010. Had applicant not requested early commencement, commencement would have began on July 5, 2007 (30 months from the priority date). However, as applicant did request early commencement in box 3 of the transmittal letter, commencement began on the date of receipt - July 3, 2007. The PTO did not mail the first Office action until August 28, 2009. Accordingly, PTO delay under 37 CFR 1.703(a)(1) should have been assessed as 359 days, not 1 day as originally calculated.

Moreover, as the commencement date was July 3, 2007, not July 5, 2007, 2 additional days of PTO delay should have been assessed under 37 CFR 1.703(b). As such, PTO delay for failure to issue the patent within three years should be 108 days, not 106 days as originally accorded.

Lastly, Patentee points out that he should have been assessed Applicant delay of 16 days pursuant to 37 CFR 1.704(c)(10) for filing the Request for Corrected Filing Receipt on May 12, 2010. The Office mailed a Supplemental Notice of Allowability on May 28, 2010. 37 CFR 1.704(c)(10) states that the adjustment shall be "the number of days, if any, beginning on the date the amendment under § 1.312 or other paper was filed and ending on the mailing date of the Office action or notice in response to the amendment under § 1.312 or such other paper". The number of days from and including May 12, 2010 to and including May 28, 2010 is 17 days, not 16 days.

In view thereof, issuance of a certificate of correction pursuant to 35 U.S.C. 254 and 37 CFR § 1.322 is appropriate. The correct number of days of patent term adjustment is 420 days (467 (359+108) days of PTO delay, reduced by 47 (30+17) days of Applicant delay).

The application is being forwarded to the Certificates of Correction Branch for issuance of a certificate of correction in order to rectify the error regarding the patent term information. See 35 U.S.C. § 254 and 37 C.F.R. § 1.322. The certificate of correction will indicate that the term of the above-identified patent is extended or adjusted by **four hundred twenty (420)** days subject to any disclaimers.

Telephone inquiries specific to this letter should be directed to Cliff Congo, Petitions Attorney, at (571)272-3207.

Anthony Knight
Director
Office of Petitions

Enc: Draft Certificate of Correction

UNITED STATES PATENT AND TRADEMARK OFFICE

DRAFT CERTIFICATE OF CORRECTION

PATENT : 7,814,859 B2

DATED : **October 19, 2010**

INVENTOR(S) : Joel Fournier

It is certified that error appears in the above-identified patent and that said Letters Patent is hereby corrected as shown below:

On the cover page,

[*] Notice: Subject to any disclaimer, the term of this patent is extended or adjusted under 35 USC 154(b) by 77 days.

Delete the phrase "by 77 days" and insert – by 420 days--

UNITED STATES PATENT AND TRADEMARK OFFICE

Commissioner for Patents
United States Patent and Trademark Office
P.O. Box 1450
Alexandria, VA 22313-1450
www.uspto.gov

GREER, BURNS & CRAIN
300 S WACKER DR
25TH FLOOR
CHICAGO, IL 60606

MAILED
MAY 06 2011
OFFICE OF PETITIONS

In re Application of Leng :
Application No. 11/794,632 : Decision on Petition
Filing Date: June 29, 2007 :
Attorney Docket No. 1991.78033 :

This is a decision on the petition under 37 CFR 1.137(b) filed March 21, 2011, which requests revival of the above-identified application.

The petition is **granted**.

The above-identified application became abandoned for failure to reply in a timely manner to the non-final Office action mailed September 8, 2010, which set a shortened statutory period for reply of three (3) months. An extension of time under the provisions of 37 CFR 1.136(a) was not obtained. Accordingly, the above-identified application became abandoned on December 9, 2010.

The instant petition requests revival of the application.

A grantable petition under 37 CFR 1.137(b) must be accompanied by:

(1) The reply required to the outstanding Office action or notice, unless previously filed,
(2) The petition fee,
(3) A statement that the entire delay in filing the required reply from the due date for the reply until the filing of a grantable petition pursuant to 37 CFR 1.137(b) was unintentional, and
(4) A terminal disclaimer and fee if the application was filed on or before June 8, 1995, or if the application is a design application.

The petition satisfies the requirements of 37 CFR 1.137(b) in so far as petitioner has supplied a reply in the form of an amendment, the required petition fee of $810, and the required statement of unintentional delay. Therefore, the petition is granted and the application is revived.

Technology Center Art Unit 1798 will be informed of the instant decision and the application will be further examined in due course.

Telephone inquiries regarding this communication should be directed to Petitions Attorney Steven Brantley at (571) 272-3203.

Charles Steven Brantley
Senior Petitions Attorney
Office of Petitions

UNITED STATES PATENT AND TRADEMARK OFFICE

Commissioner for Patents
United States Patent and Trademark Office
P.O. Box 1450
Alexandria, VA 22313-1450
www.uspto.gov

GREER, BURNS & CRAIN
300 S WACKER DR.
25TH FLOOR
CHICAGO IL 60606

MAILED
AUG 03 2011
OFFICE OF PETITIONS

In re Application of	:	
Luhao Leng	:	
Application No. 11/794,632	:	DECISION ON REQUEST FOR REFUND
Filed: June 29, 2007	:	
Attorney Docket No. 1991.78033	:	

This is a decision on the Request For Refund filed July 27, 2011.

The request is **GRANTED**.

Applicant files the above request for refund and states that "...Since the applicant has successfully revived the above mentioned abandoned application and paid the appropriate small entity fee of $810.00 as required under 37 CFR § 1.17(m) where the application claims small entity status. Thus, the earlier fee of $1,100 [sic] for the discussed extension charged to deposit account number 07-2069 is inapplicable because the applicant has paid for the revival of its abandoned application."

Further, an extension of time under 37 CFR 1.136 must be filed prior to the expiration of the maximum extendable period for reply. *See* In re Application of S., 8 USPQ2d 1630, 1631 (Comm'r Pats. 1988). Since the $1,110.00 extension of time fee submitted with the petition on March 21, 2011 was subsequent to the maximum extendable period for reply, this fee is unnecessary and will be credited to petitioner's deposit account.

As authorized, the $1,110.00 fee for the petition filed March 21, 2011 has been credited to petitioner's deposit account.

Any questions concerning this matter may be directed to the undersigned at (571) 272-3208.

/KOC/
Karen Creasy
Petitions Examiner
Office of Petitions

UNITED STATES PATENT AND TRADEMARK OFFICE

Commissioner for Patents
United States Patent and Trademark Office
P.O. Box 1450
Alexandria, VA 22313-1450
www.uspto.gov

NIXON & VANDERHYE, PC
901 NORTH GLEBE ROAD, 11TH FLOOR
ARLINGTON VA 22203

MAILED

OCT 06 2011

OFFICE OF PETITIONS

In re Patent No. 7,811,533	:	
Issue Date: October 12, 2010	:	
Application No. 11/794,656	:	ON PETITION
Filed: July 3, 2007	:	
Attorney Docket No. ARC-4462-47	:	

This is a decision on the request filed September 30, 2011, will be treated as a petition under 37 CFR 3.81(b) to correct the name of the assignee on the front page of the above-identified patent by way of a Certificate of Correction.

The petition is **GRANTED**.

The patent file is being forwarded to the Certificates of Correction Branch for issuance of the requested Certificate of Correction.

Telephone inquiries concerning this decision may be directed to the Kimberly Inabinet at (571) 272-4618. Inquiries regarding the issuance of a certificate of correction should be directed to the Certificate of Correction Branch at (703) 756-1814.

/Carl Friedman/
Carl Friedman
Petitions Examiner
Office of Petitions

UNITED STATES PATENT AND TRADEMARK OFFICE

Commissioner for Patents
United States Patent and Trademark Office
P.O. Box 1450
Alexandria, VA 22313-1450
www.uspto.gov

BERLINER & ASSOCIATES
555 WEST FIFTH STREET
31ST FLOOR
LOS ANGELES, CA 90013

MAILED

DEC 16 2010

OFFICE OF PETITIONS

In re Patent No. 7,718,883	:	
Issue Date: May 18, 2010	:	
Application No. 11/794,701	:	DECISION ON PETITION
Filed: July 3, 2007	:	
Attorney Docket No. 7644-101	:	

This is a decision on the petition under 37 CFR 1.181 (no fee), filed September 8, 2010, requesting issuance of a duplicate Letters Patent for the above-identified patent.

The instant petition is not signed by an attorney of record. However, in accordance with 37 CFR 1.34(a), the signature of Miles Yamanaka appearing on the petition shall constitute a representation to the United States Patent and Trademark Office that he is authorized to represent the particular party on whose behalf he acts.

The petition is **dismissed**.

Petitioner states that the original Letters Patent was never received.

The Office follows the guidelines set forth in MPEP § 711.03(c) (*see also* "Withdrawing the Holding of Abandonment When Office Actions Are Not Received," 1156 Official Gazette 53 (November 16, 1993), which sets forth that, in the absence of any irregularity in the mailing of an Office action (in this case, the Letters Patent), there is a strong presumption that the Office action (Letters Patent) was properly mailed to practitioner at the address of record. This presumption may be overcome by a showing that the Letters Patent was not in fact received. In this regard, the showing required to establish the failure to receive the Letters Patent must consist of the following:

1. a statement from practitioner stating that the Letters Patent was not received by the practitioner;
2. a statement from the practitioner attesting to the fact that a search of the file jacket and docket records indicates that the Letters Patent was not received; and

3. a copy of the docket record where the nonreceived Letters Patent would have been entered had it been received must be attached to and referenced in the practitioner's statement.

The present petition lacks item 2 above. In this regard, petitioner must provide a statement that a search of the file jacket and docket records indicates that the Letters Patent was not received.

In view of the above, the petition for issuance of a duplicate Letters Patent under 37 CFR 1.181 cannot be granted at this time.

If petitioner does not wish to provide the above statement, then a petition under 37 CFR 1.182 for a duplicate Letters Patent and the petition fee of $400 can be submitted.

Further correspondence with respect to this matter should be addressed as follows:

By Mail: Mail Stop PETITION
Commissioner for Patents
P. O. Box 1450
Alexandria, VA 22313-1450

By facsimile: (571) 273-8300
Attn: Office of Petitions

By hand: U. S. Patent and Trademark Office
Customer Service Window, Mail Stop Petitions
Randolph Building
401 Dulany Street
Alexandria, VA 22314

Telephone inquiries concerning this decision should be directed to the undersigned at (571) 272-3226.

Andrea Smith
Petitions Examiner
Office of Petitions

UNITED STATES PATENT AND TRADEMARK OFFICE

Commissioner for Patents
United States Patent and Trademark Office
P.O. Box 1450
Alexandria, VA 22313-1450
www.uspto.gov

BERLINER & ASSOCIATES
555 WEST FIFTH STREET
31ST FLOOR
LOS ANGELES, CA 90013

MAILED

FEB 04 2011

OFFICE OF PETITIONS

In re Patent No. 7,718,883	:	
Issue Date: May 18, 2010	:	
Application No. 11/794,701	:	DECISION ON PETITION
Filed: July 3, 2007	:	
Attorney Docket No. 7644-101	:	

This is a decision on the renewed petition under 37 CFR 1.181 (no fee), filed January 4, 2011, requesting issuance of a duplicate Letters Patent for the above-identified patent.

The instant petition is not signed by an attorney of record. However, in accordance with 37 CFR 1.34(a), the signature of Miles Yamanaka appearing on the petition shall constitute a representation to the United States Patent and Trademark Office that he is authorized to represent the particular party on whose behalf he acts.

The petition is **granted**.

The Office of Data Management is directed to issue duplicate Letters Patent.

A copy of this decision is being forwarded to the Office of Data Management for issuance of the duplicate Letters Patent.

This patent file is being referred to the Files Repository.

Any questions concerning this matter may be directed to the undersigned at (571) 272-3226. Any questions concerning issuance of the duplicate Letters Patent should be directed to the Office of Data Management at (571) 272-4200.

Andrea Smith
Petitions Examiner
Office of Petitions

cc: Ollie Person – FAX No. (571) 270-9764
Kimberly Terrell – FAX No. (571) 270-9958

PTO/SB/20PCT-EP (05-10)
Approved for use through 01/31/2010. OMB 0651-0058
U.S. Patent and Trademark Office, U.S. DEPARTMENT OF COMMERCE
Under the Paperwork Reduction Act of 1995, no persons are required to respond to a collection of information unless it displays a valid OMB control number.

REQUEST FOR PARTICIPATION IN THE PATENT COOPERATION TREATY - PATENT PROSECUTION HIGHWAY (PCT-PPH) PILOT PROGRAM BETWEEN THE EUROPEAN PATENT OFFICE (EPO) AND THE USPTO

Application No:	11/794,756	Filing date:	July 5, 2007
First Named Inventor:	Klaus Georg Mathias MÖLLER		
Title of the invention:	SYSTEMS FOR TEMPERING COMPONENTS OF A PRINTING MACHINE		

THIS REQUEST FOR PARTICIPATION IN THE PCT-PPH PILOT PROGRAM ALONG WITH THE REQUIRED DOCUMENTS MUST BE SUBMITTED VIA EFS-WEB. INFORMATION REGARDING EFS-WEB IS AVAILABLE AT HTTP://WWW.USPTO.GOV/EBC/EFS_HELP.HTML

APPLICANT HEREBY REQUESTS PARTICIPATION IN THE PCT-PPH PROGRAM AND PETITIONS TO MAKE THE ABOVE-IDENTIFIED APPLICATION SPECIAL UNDER THE PCT-PPH PROGRAM.

The above-identified application is (1) a national stage entry of the corresponding PCT application, or (2) a national stage entry of another PCT application which claims priority to the corresponding PCT application, or (3) a national application that claims domestic/ foreign priority to the corresponding PCT application, or (4) a national application which forms the basis for the priority claim in the corresponding PCT application, or (5) a continuing application of a U.S. application that satisfies one of (1) to (4) above, or (6) a U.S. application that claims domestic benefit to a U.S. provisional application which forms the basis for the priority claim in the corresponding PCT application.

The corresponding PCT application number(s) is/are: PCT/EP2005/057227

The international date of the corresponding PCT application(s) is/are: December 30, 2005

I. List of Required Documents:

a. **A copy of the latest international work product (WO/ISA, WO/IPEA, or IPER) in the above-identified corresponding PCT application(s)**

☐ Is attached

☑ Is not attached because the document is already in the U.S. application.

b. **A copy of all claims which were indicated as having novelty, inventive step and industrial applicability in the above-identified corresponding PCT application(s).**

☐ Is attached.

☑ Is not attached because the document is already in the U.S. application.

c. **English translations of the documents in a. and b. above are attached (if the documents are not in the English language). A statement that the English translation is accurate is attached for the document in b. above.**

This collection of information is required by 35 U.S.C. 119, 37 CFR 1.55, and 37 CFR 1.102(b). The information is required to obtain or retain a benefit by the public, which is to be filed by the USPTO to process an application. Confidentiality is governed by 35 U.S.C. 122 and 37 CFR 1.11 and 1.14. This collection is estimated to take 2 hours to complete, including gathering, preparing, and submitting the completed application form to the USPTO. Time will vary depending upon the individual case. Any comments on the amount of time you require to complete this form and/or suggestions for reducing this burden should be sent to the Chief Information Officer, U.S. Patent and Trademark Office, U.S. Department of Commerce, P.O. Box 1450, Alexandria, VA 22313-1450. DO NOT SEND FEES OR COMPLETED FORMS TO THIS ADDRESS.

REQUEST FOR PARTICIPATION IN THE PCT-PPH PILOT PROGRAM BETWEEN THE EPO AND THE USPTO

(continued)

Application No.	11/794,756
First Named Inventor	Klaus Georg Mathias MÜLLER

6. (1) An information disclosure statement listing the documents cited in the international work products (ISR, WO/ISA, WO/IPEA, IPER) of the corresponding PCT application.

☐ is attached

☑ Has already been filed in the above-identified U.S. application on July 5, 2007

(2) Copies of all documents (except) for U.S. patents or U.S. patent application publications)

☐ Are attached

☑ Have already been filed in the above-identified U.S. application on July 5, 2007

II. Claims Correspondence Table:

Claims in US Application	Patentable Claims in the corresponding PCT Application	Explanation regarding the correspondence
66 - 68	1 - 3	direct correspondence
69 - 71	4 - 6	U.S. claims amended to remove multiple dependencies
		set forth in PCT claims
72	7	direct correspondence
73 - 79	8 - 14	U.S. claims amended to remove multiple dependencies
		set forth in PCT claims
80 - 82	15 - 17	direct correspondence
83 - 94	18 - 29	U.S. claims amended to remove multiple dependencies
		set forth in PCT claims
95 - 97	30 - 32	direct correspondence

III. All the claims in the US application sufficiently correspond to the patentable claims in the corresponding PCT application.

Signature /drh/	Date 2007-09027
Name (Print/Typed) Douglas R. Hanscom	Registration Number 26600

KARIN T. DUNN

GERMAN TRANSLATION AND LANGUAGE SERVICES
Certified by the American Translators Association

4706 OLDE FORGE CT., FAIRFAX, VA 22032
TELEPHONE, FAX: 703-426-1422 · DUNN6FAM@MSN.COM

Date: September 22nd, 2010

DECLARATION

The undersigned, Karin T. Dunn, hereby states that she is well acquainted with both the English and German languages and that the attached is a true translation to the best of her knowledge and ability of the German text of the amended claims for PCT/EP2005/057227, which was filed on 30 December 2005 and was published on 13 July 2006 as WO 2006/072558 A1.

The undersigned declares that the above statement is true and that this statement was made with the knowledge that willful false statements and the like so made are punishable by fine or imprisonment, or both, under Section 1001 of Title 18 of the United States Code and that such willful false statements may jeopardize the validity of the application or document or any patent resulting therefrom.

Karin T. Dunn

Translation of the pertinent portions of a Notification Regarding the Forwarding of the International Preliminary Report on Patentability, mailed 02/05/2007

2. This report comprises a total of 10 pages, including this cover page.

3. Moreover, ATTACHMENTS are included in this report, these comprise:

a. x (forwarded to Applicant and the International Office) a total of 7 pages, these relate to

x pages containing the specification, claims and/or drawings which were changed and are the basis of this report, and/or pages with corrections approved by the Office (see Rule 70.16 and Section 607 of the Administrative Regulations).

4. This report contains information regarding the following items:

x Field No. I Basis of the Report
x Field No. IV Lack of Unity of the Invention
x Field No. V Reasoned Determination in accordance with Article 35(2) regarding novelty, inventive activities and commercial applicability; documents and explanations in support of this determination
x Field No. VI Certain Cited Documents

Field No. I Basis of the Report

1. Regarding the **language**, this notification is based on

x the international application in the language in which it was filed.

2. Regarding the **components** of the international application, the report is based on the

Specification, pages

1 to 45 in the originally filed version

Claims, Nos.

2(part), 3-32 received 08/05/06 with letter of 08/03/06
1, 2(part) received 01/24/07 by telefax

Drawings, sheets

1/11 to 11/11 in the originally filed version

Field No. IV Lack of Unity of the Invention

1. Upon the request for restricting the claims or to pay additional fees, Applicant has

x paid additional fees

within the indicated term

3. The Office is of the opinion that the requirements for unity of the invention in accordance with Rules 13.1, 13.2 and 13.3

x has not been met for the following reasons:

see the attached sheet

4. Therefore the report has been prepared for the following portions of the international application:

x all portions

Field No. V Reasoned Determination in accordance with Article 35(2)

1. Determination:

Novelty (N)	Yes:	Claims: 1 to 32
	No:	Claims:
Inventive Activities (IS)	Yes:	Claims: 1 to 32
	No:	Claims:
Commercial Applicability (IA)	Yes:	Claims: 1 to 32
	No:	

2. Documents and Explanations (Rule 70.7):

see the attached sheet

Field No. VI Certain Cited Documents

2. Disclosures not made in writing (Rule 70.9)

see the attached sheet

ATTACHED SHEET

Re.: Item IV

The different inventions are:

Claims 1, 4 to 6, 8 to 33

A circuit [sic] to two cooling processes via a heat exchanger.

2. Claims: 2, 3 to 14, 16 to 33

Independent temperature-regulating medium reservoir.

For the following reasons, these invention/groups are not interrelated in such a way that they realize a single common inventive idea (Rule 13.1 PCT).

Document D2 discloses a system for the temperature regulation of components (see page 1, lines 1 to 3) of a printing press by means of a cooling device (see Fig. 1) which, at a first outlet, makes available a temperature-regulating medium, which is at least at a first desired temperature level, for a first supply circuit (F, W1) of temperature-regulating media to the component to be temperature-regulated,

- wherein the cooling arrangement has a first cooling process (11, 14, 15) with a first fluid circuit (K), which is designed for cooling a temperature-regulating medium to a temperature level T_K below the ambient or outside temperature,
- a second cooling process with an arrangement for cooling a fluid circuit (W) which is different from the first fluid circuit (K).

The supply circuit (F, W1) is thermally coupled to one of the cooling processes via a heat exchanger (16, 6).

1. The subject of the first invention differs from document D1 [sic] by the following special technical characteristics

- the second cooling process is a device for cooling by means of outside air,
- [that] the supply circuit for the supply of temperature-regulating medium of the desired temperature level in the direction of the component to be temperature-regulated to the two cooling processes can be thermally coupled by means of at least one heat exchanger,
- means are provided with which, depending on the desired

temperature level, a mixture of a temperature-regulating flow cooled by means of the first cooling process and a temperature-regulating flow cooled only by the second cooling process can be produced and fed into the supply circuit as the temperature-regulating medium with the desired temperature.

These characteristics of the first group of claims solve the problem of creating a more efficient system for temperature regulation.

2. The subject of the second invention differs from document D2 by the following special technical characteristics:

- [that] a temperature-regulating medium reservoir, which can be operated independently of the cooling arrangement is provided, which makes available temperature-regulating media of a desired temperature level above the ambient temperature for a supply circuit, which differs from the first supply circuit, for the component to be heated.
- an arrangement for the recovery of heat from energy from the heat flows is provided, and the energy from the arrangement for recovery of heat can be returned for heating purposes to the temperature-regulating medium reservoir.

These characteristics of the second invention solve the problem of creating a system for temperature regulation, wherein the components of a printing press are more rapidly heated when it is placed into operation.

Accordingly, the two mentioned inventions solve different problems in regard to the previously mentioned prior art by means of different special technical characteristics.

The said inventions are not connected in such a way that they realize a common inventive idea in accordance with Rule 13.1 PCT.

Moreover, there is no technical connection within the meaning of Rule 13.2 PCT which would be expressed by one or several identical or corresponding special technical characteristics.

The said two groups of inventions therefore do not meet the requirement of unity of the invention in accordance with Rules 13.1 and 13.2 PCT.

Re.: Item V

First Invention

1. Reference is made to the following documents:

D1 to D3

Document D1 is considered to be the closest prior art. It discloses (the references in parentheses relate to this document) a system for the temperature regulation of components of a printing press by means of a cooling device (see Fig. 1) which, at an outlet (6,7), makes available temperature-regulating medium, which is at least at a first desired temperature level, for a first supply circuit of temperature-regulating media to the component to be temperature-regulated,

- wherein the cooling arrangement has a first cooling process (8) with a fluid circuit (4), which is designed for cooling a temperature-regulating medium to a temperature level T_K below the ambient or outside temperature,

- a second cooling process (10) with an arrangement for cooling a fluid circuit (9) which is different from the first fluid circuit (4) by means of outside air.

The object of claim 1 therefore differs from the known system for temperature regulation in that

- the supply circuit for the supply of temperature-regulating medium of the desired temperature level in the direction of the component to be temperature-regulated can be thermally coupled with the two cooling processes via at least one heat exchanger,

- and that means are provided with which, depending on the desired temperature level, a mixture of a temperature-regulating flow cooled by means of the first cooling process and a temperature-regulating flow cooled only by the second cooling process can be produced and fed into the supply circuit as the temperature-regulating medium with the desired temperature.

The problem which has been objectively solved by these different characteristics consists in creating a system for the temperature regulation of components, wherein a greater flexibility is achieved for making a temperature-regulating medium available.

One skilled in the art does not receive any suggestion in the cited documents regarding the object to be attained or the respective attainment thereof. For this reason the subject of

claim 1 of the present application is based on inventive activities (Article 33(3) PCT).

The reasons for this are the following:

Both documents D1 and D3 show systems for temperature-regulating components, wherein a second cooling device is provided. In D1 the supply circuit is thermally coupled either to the first or to the second cooling process (cooling by means of outside air). In D3 the supply circuit is coupled to both cooling processes.

Therefore claim 1 has been considered to be inventive.

Claims 4 to 6, 9 to 32 depend from claim 1 and also meet the requirements of PCT.

Second Invention

Reference is made to the following documents:

D5, D6, D7

1. Document D5 is considered to be the closest prior art in regard to the subject of claim 2. It discloses (the references in parentheses relate to this document) a system for regulating the temperature of components of a printing press by means of a cooling arrangement which, at a first outlet, makes available a temperature-regulating medium, which is at least at a first desired temperature level, for a first supply circuit (R86, V86) of temperature-regulating media to the component to be temperature-regulated,

- and wherein the cooling arrangement has a first cooling process (92, 102) with a first fluid circuit, which is designed for cooling a temperature-regulating medium to a temperature level T_K below the ambient or outside temperature,
- wherein a temperature-regulating medium circuit (R118, V118 or R106, V106)), which can be operated independently of the cooling arrangement, is provided,
- which makes available temperature-regulating media of a desired temperature level above the ambient temperature for a supply circuit, which differs from the first supply circuit, for the component to be heated (see paragraph 40 and 41),
- wherein a device for recovering heat from energy in heat flows (86, 82) is provided,
- wherein energy from the device for recovering heat can be returned for heating purposes into the temperature-regulating medium circuit (R118, V118).

Therefore the subject of claim 2 differs from the known system for temperature regulation in that:

- the temperature-regulating medium circuit, which can be operated independently of the cooling arrangement has a temperature-regulating medium reservoir and that the arrangement for the recovery of heat can be returned [sic] into the temperature-regulating medium reservoir.

The problem which has been objectively solved by these different characteristics consists in improving a system for temperature regulation, having a device for heat recovery, for the better utilization of the energy from heat flows.

D7 shows a system for temperature regulation, wherein a compression refrigeration machine releases it waste heat to the heat-carrying medium of a temperature-regulating medium circuit. In the course of starting up the printing press, an ink spreader is brought to the operating temperature by means of this (see paragraphs 9 and 35). No temperature-regulating medium reservoir is disclosed.

D6 shows a system for temperature regulation, having a cooling arrangement with two cooling processes (column 1, lines 27 to 34), wherein the waste heat from the refrigeration machine is stored in a temperature-regulating medium reservoir (30) and can be used for regulating the temperature of a building (column 1, lines 10 to 15). The reservoir can be operated as a function of the cooling arrangement.

One skilled in the art is not provided with any suggestions regarding the above described solution in the cited documents. For this reason the subject of claim 2 of the present application is based on inventive activities (Article 33(3) PCT).

2. Dependent claims 3 to 14, 16 to 33 depend from claim 2 and therefore also meet the requirements of PCT regarding novelty and inventive activities.

Claims

1. A system for regulating the temperature of components (43; 54; M) of a printing press by means of a cooling arrangement (77) which, at a first outlet, provides a temperature-regulating medium, at least at a first desired temperature level (T2; T3) for a first supply circuit (K2; K3) for temperature-regulating medium, to the component (43; 54; M) that is to be temperature-regulated, and wherein the cooling arrangement (77) has a first cooling process (87) with a first fluid circuit (101), which is embodied for cooling a temperature-regulating medium to a temperature level T_k that is below the ambient or outside temperature, wherein a second cooling process (86) is provided, said process having an arrangement (88) for cooling a fluid circuit (93), which is different from the first fluid circuit (101), by means of outside air, characterized in that the supply circuit (K2; K3) for supplying temperature-regulating medium at the desired temperature level (T2; T3) to the component (43; 54; M) that is to be temperature-regulated can be thermally coupled to the two cooling processes (86; 87) via at least one heat exchanger (94; 96; 102) per process, and in that means are provided by which, depending upon the desired temperature level (T2; T3), a mixture of a flow of temperature-regulating medium which is cooled by means of the first cooling process (87) and a flow of temperature-regulating medium which is cooled only by the second cooling process (86) can be produced and fed as the temperature-regulating medium into the supply circuit (K2; K3).

2. The system for regulating the temperature of components (43; 54; M) of a printing press by means of a cooling arrangement (77) which, at a first outlet, provides a temperature-regulating medium, at least at a first desired temperature level (T2; T3) for a first supply circuit (K2; K3) for temperature-regulating medium, to the component (43; 54; M) that is to be temperature-regulated, and wherein the cooling arrangement (77) has a first cooling process (87) with a first fluid circuit (101), which is embodied for cooling a temperature-regulating medium to a temperature level T_k that is below the ambient or outside temperature, characterized in that a temperature-regulating medium reservoir

(76) that can be operated independently of the cooling arrangement (77) is provided, which provides temperature-regulating medium at a desired temperature level (T1), which is above the ambient temperature, for a supply circuit (K1), which is different from the first supply circuit (K2; K3), to the component (43; 54) that is to be heated, and in that a device (66) for recovering heat from the energy from heat flows (63; 68; 69) is provided, and in that energy from the heat recovery device (66) can be returned to the temperature-regulating medium reservoir (76) for heating purposes.

3. The system in accordance with claim 2, characterized in that the cooling arrangement (77) comprises a second cooling process (86) with an arrangement (88) for cooling a fluid circuit (93), which is different from the first fluid circuit (101), by means of outside air.

4. The system in accordance with claim 1 or 2, characterized in that the cooling arrangement (77) is configured to provide, at a second outlet, a temperature-regulating medium at a second temperature level (T3; T2), which is different from the first temperature level (T2; T3), for a second supply circuit (K3; K2) for temperature-regulating medium to the component (M; 43; 54) that is to be temperature-regulated.

5. The system in accordance with claim 1 or 2, characterized in that the first cooling process (87) comprises a refrigeration machine (89; 90; 91) for generating cold by compression.

6. The system in accordance with claim 1 or 3, characterized in that the arrangement (88) is embodied as a convection cooling device with or without an evaporator.

7. The system in accordance with claim 3, characterized in that the two cooling processes (86; 87) are thermally coupled via at least one heat exchanger (94; 96; 102) per process

to a supply circuit (K2; K3) for supplying temperature-regulating medium at the desired temperature level (T2; T3) to the component (43; 54; M) that is to be temperature-regulated.

8. The system in accordance with claim 1, 4 or 7, characterized in that temperature-regulating medium that is cooled by means of the first cooling process (87) or temperature-regulating medium that is cooled only by the second cooling process (86) can be selectively fed into the supply circuit (K2; K3) as the temperature-regulating medium at the desired temperature level (T2; T3).

9. The system in accordance with claim 1, 4 or 7, characterized in that, depending upon the desired temperature level (T2; T3), a mixture of a flow of temperature-regulating medium that is cooled by means of the first cooling process (87) and a flow of temperature-regulating medium that is cooled only by the second cooling process (86) can be produced and fed into the supply circuit (K2; K3) as the temperature-regulating medium.

10. The system in accordance with claim 4 or 7, characterized in that temperature-regulating medium that is cooled by means of the first cooling process (87) or temperature-regulating medium that is cooled only by the second cooling process (86) or a mixture of the two can be selectively fed into the supply circuit (K2; K3) as the temperature-regulating medium at the desired temperature level (T2; T3).

11. The system in accordance with claim 8, 9 or 10, characterized in that a valve (103; 104) is provided, by means of which a selective feeding and/or mixing of the temperature-regulating media or flows of temperature-regulating media takes place.

12. The system in accordance with claim 8, 9 or 10, characterized in that the flow of temperature-regulating medium that is cooled by the first cooling process (87) is conducted in such a way that, prior to contact with the first cooling process (87), it is

brought into thermal contact with the second cooling process (86).

13. The system in accordance with claim 1, 2, 3 or 4, characterized in that the supply circuit (K2) which conducts the temperature-regulating medium at the first temperature level (T2) is provided for regulating the temperature of components (43; 47; 54) which are embodied as printing couple cylinders (43; 47) and/or as rollers (54).

14. The system in accordance with claim 1, 3 or 4, characterized in that the supply circuit (K3) which conducts the temperature-regulating medium at the second temperature level (T3) is provided for regulating the temperature of components (M) which are embodied as drive mechanisms (M) and/or as drive mechanism regulators.

15. The system in accordance with claim 1, characterized in that a temperature-regulating medium reservoir (76) is provided, which can be operated independently of the cooling arrangement (77) and which provides temperature-regulating medium at a desired temperature level (T1), which is above the ambient temperature, for a supply circuit (K1), which is different from the first supply circuit (K2; K3), to the component (43; 54) that is to be temperature-regulated.

16. The system in accordance with claim 13, characterized in that several temperature-regulating circuits (KFZ; KRW) for regulating the temperature of printing couple cylinders (43; 47) and/or rollers (54) by means of temperature-regulating media are connected, or can be selectively connected, to the supply circuit (K2) that contains temperature-regulating medium at the first temperature level (T2).

17. The system in accordance with claim 13, characterized in that a supply unit (71) is provided between the cooling arrangement (77) and the component (43; 47; 54), wherein said unit is fed temperature-regulating medium at the first temperature level (T2) by means of the supply circuit (K2), and itself supplies temperature-regulating medium to

several temperature-regulating circuits (KFZ; KRW) for regulating the temperature of printing couple cylinders (43; 47) and/or rollers (54).

18. The system in accordance with claim 2 or 15, characterized in that several temperature-regulating circuits (KFZ; KRW) for regulating the temperature of printing couple cylinders (43; 47) and/or rollers (54) by means of temperature-regulating medium are connected, or can be selectively connected, to the supply circuit (K1) containing temperature-regulating medium at a temperature level (T1) that is above the ambient temperature.

19. The system in accordance with claim 1, 4 or 16, characterized in that a temperature-regulating circuit (KFZ; KRW) for regulating the temperature of printing couple cylinders (43; 47) and/or rollers (54) can be selectively connected to a first or second supply circuit (K3; K2), via at least one remotely controllable valve (78) each, with respect to the temperature-regulating medium that is to be conducted in said temperature-regulating circuit (KFZ; KRW).

20. The system in accordance with claim 2 or 15, characterized in that a supply unit (71) is provided between the temperature-regulating medium reservoir (76) and the component (43; 47; 54) that is to be temperature-regulated, wherein said supply unit is fed temperature-regulating medium, which is at a temperature level (T1) above the ambient temperature, via the supply circuit (K1), and itself supplies temperature-regulating medium to several temperature-regulating circuits (KFZ; KRW) for regulating the temperature of printing couple cylinders (43; 47) and/or rollers (54).

21. The system in accordance with claim 17 or 20, characterized in that the temperature-regulating circuits (KFZ) of all printing couple cylinders (43; 47; 54) to be temperature-regulated in a printing unit comprising a plurality of printing locations are supplied from the supply unit (71).

22. The system in accordance with claim 17 or 20, characterized in that the temperature-regulating circuits (KFZ) of all printing couple cylinders (43; 47; 54) to be temperature-regulated in a printing tower (73) comprising at least four double printing locations are supplied from the supply unit (71).

23. The system in accordance with claim 17 or 20, characterized in that the temperature-regulating circuits (KFZ) of all printing couple cylinders (43; 47; 54) to be temperature-regulated in a printing unit (73) comprising a plurality of printing couples (41) or double printing couples (62) are supplied from the supply unit (71).

24. The system in accordance with claim 17 or 20, characterized in that the temperature-regulating circuits (KFZ) of all printing couple cylinders (43; 47; 54) to be temperature-regulated in a printing unit (73) comprising at least four double printing couples (62) are supplied from the supply unit (71).

25. The system in accordance with claim 17 or 20, characterized in that the temperature-regulating circuits (KRW) of all rollers (54) to be temperature-regulated in a printing unit (73) comprising a plurality of printing couples (41; 62) are supplied from the supply unit (71).

26. The system in accordance with claim 17 or 20, characterized in that the temperature-regulating circuits (KRW) of all rollers (54) to be temperature-regulated in a printing unit (73) comprising at least four double printing couples (62) are supplied from the supply unit (71).

27. The system in accordance with claims 17 and 20, characterized in that lines and valves (84) are provided between the supply circuits (K1; K2) and the temperature-regulating circuit (KFZ; KRW) of printing couple cylinders (43; 47) and/or rollers (54) in such a way that the temperature-regulating circuit (KFZ; KRW) can be selectively supplied with temperature-regulating medium that is above the ambient temperature from the supply

circuit (K1), or with temperature-regulating medium coming from the cooling arrangement (77), from the supply circuit (K2).

28. The system in accordance with claim 23 and 25 or 24 and 26, characterized in that each roller (54) of the printing unit (73) has a separately controllable temperature-regulating circuit (KRW), and each pair of printing couple cylinders (43), embodied as forme cylinders (43), has a separately controllable temperature-regulating circuit (KFZ).

29. The system in accordance with claim 1 or 3, characterized in that the cooling arrangement (77) has a logic unit (92) which is embodied to make a selection regarding the distribution of participation by the two cooling processes (86; 87) in preparing the temperature level (T2; T3) that is desired at the outlet, taking into consideration information regarding the outside temperature.

30. The system in accordance with claim 29, characterized in that, for shifting the distribution, the logic unit (92) is in a signal connection with actuating elements (103; 104), in particular, controllable valves (103; 104).

31. The system in accordance with claim 29, characterized in that the logic unit (92) of the cooling arrangement (77) is in a signal connection with a computing and/or control device (100) of the printing press, which is capable of transmitting a target temperature $T2_{target}$, $T3_{target}$ for the desired temperature level (T2; T3), determined in the computing and/or control device (100), to said logic unit.

32. The system in accordance with claim 15, characterized in that a device (66) for recovering heat from the energy from heat flows (63; 68; 69) is provided.

UNITED STATES PATENT AND TRADEMARK OFFICE

UNITED STATES DEPARTMENT OF COMMERCE
United States Patent and Trademark Office
Address: COMMISSIONER FOR PATENTS
P.O. Box 1450
Alexandria, Virginia 22313-1450
www.uspto.gov

APPLICATION NO.	FILING DATE	FIRST NAMED INVENTOR	ATTORNEY DOCKET NO.	CONFIRMATION NO.
11/794,756	07/05/2007	Klaus Georg Matthias Muller	W1.2472 PCT-US	5942

23294 7590 11/09/2010
JONES, TULLAR & COOPER, P.C.
P.O. BOX 2266 EADS STATION
ARLINGTON, VA 22202

EXAMINER
CULLER, JILL E

ART UNIT	PAPER NUMBER
2854	

MAIL DATE	DELIVERY MODE
11/09/2010	PAPER

Please find below and/or attached an Office communication concerning this application or proceeding.

The time period for reply, if any, is set in the attached communication.

UNITED STATES PATENT AND TRADEMARK OFFICE

Commissioner for Patents
United States Patent and Trademark Office
P.O. Box 1450
Alexandria, VA 22313-1450
www.uspto.gov

JONES, TULLAR & COOPER, P.C.
P.O. BOX 2266 EADS STATION
ARLINGTON VA 22202

In re Application of
Müller et al.
Application No.: 11/794,756
Filed: 05 July 2007
Attorney Docket No.: W1.2472 PCT-US
For: SYSTEMS FOR TEMPERING COMPONENTS OF A PRINTING MACHINE

: DECISION ON REQUEST TO
: PARTICIPATE IN THE PCT PATENT
: PROSECUTION HIGHWAY PILOT
: PROGRAM AND PETITION
: TO MAKE SPECIAL UNDER
: 37 CFR 1.102(d)

This is a decision on the request to participate in the PCT Patent Prosecution Highway (PCT-PPH) pilot program and the petition under 37 CFR 1.102(a), filed 27 September 2010, to make the above-identified application special.

The request and petition are **GRANTED**.

Discussion

A grantable request to participate in the PCT-PPH pilot program and petition to make special require:

(1) The U.S. application must disclose an eligible relationship to one or more PCT applications where the ISA or IPEA are the JPO, EPO, KIPO, or USPTO;

(2) At least one claim in the PCT application has novelty, inventive step, and industrial applicability and must be free of any observations in Box VIII in the latest work product in the international stage or applicant must identify and explain why the claim(s) is/are not subject to the observation in Box VIII;

(3) Applicant must submit a copy of the claim(s) from the PCT application(s) that have novelty, inventive step, and industrial applicability along with an English translation thereof and a statement that the English translation is accurate, if the claims are not in the English language;

(4) All the claims in the U.S. application must sufficiently correspond or be amended to sufficiently correspond to the claim(s) that have novelty, inventive step, and industrial applicability in the PCT application(s);

(5) Examination of the U.S. application has not begun;

(6) Applicant must submit a copy of the latest international work product from the PCT application indicating that the claim(s) have novelty, inventive step, and industrial applicability along with an English translation thereof and a statement that the English translation is accurate

if the latest international work product is not in the English language;

(7) Applicant must submit an IDS listing the documents cited by the PCT examiner in the international work product along with copies of documents except U.S. patents or U.S. patent application publications.

The request to participate in the PCT-PPH pilot program and petition comply with the above requirements. Accordingly, the above-identified application has been accorded "special" status.

Telephone inquiries concerning this decision should be directed to Lee W. Young at 571-272-4549.

All other inquiries concerning the examination or status of the application is accessible in the PAIR system at http://www.uspto.gov/ebc.index.html.

This application will be forwarded to the examiner for action on the merits commensurate with this decision once this application's formality reviews have been completed.

Lee W. Young
TQAS Technology Center 2800 - Semiconductors,
Electrical & Optical Systems & Components

UNITED STATES PATENT AND TRADEMARK OFFICE

Commissioner for Patents
United States Patent and Trademark Office
P.O. Box 1450
Alexandria, VA 22313-1450
www.uspto.gov

MAILED
FEB 14 2012
OFFICE OF PETITIONS

Kilpatrick Townsend & Stockton LLP
Two Embarcadero Center, 8th Floor
San Francisco, CA 94111

In re Patent of Christoph Gauer	:	DECISION ON REQUEST
Patent No. 8,062,904	:	FOR RECONSIDERATION OF
Issue Date: November 22, 2011	:	PATENT TERM ADJUSTMENT
Application No. 11/794,768	:	AND NOTICE OF INTENT TO
371(c) Date: March 5, 2009	:	ISSUE CERTIFICATE OF
Atty. Docket No. 87904-781745(013100US)	:	CORRECTION

This is a decision on the petition filed January 23, 2012, which is being treated as a petition under 37 C.F.R. § 1.705(d) requesting the patent term adjustment indicated on the patent be corrected to indicate the term of the patent is extended or adjusted by 566 days.

The petition to correct the patent term adjustment indicated on the patent to indicate the term of the patent is extended or adjusted by 566 days is **GRANTED**.

The Office previously entered a 3-day reduction in patent term adjustment under 37 C.F.R. § 1.704(b) as a result of delay in the submission of the issue fee.

Patentee states a reduction in patent term adjustment is unwarranted based on the following facts:

1. The Notice of Allowance was mailed July 8, 2011;
2. The date of October 8, 2011, was a Saturday;
3. The date of October 9, 2011, was a Sunday;
4. The date of October 10, 2011, was a federal holiday; and
5. The issue fee was submitted October 11, 2011.

In view of the prior facts, the Office agrees entry of the 3-day reduction in patent term adjustment was unwarranted and agrees the correct patent term adjustment is 566 days, not 563 days.

The Office acknowledges submission of the $200.00 fee set forth in 37 C.F.R. § 1.18(e). No additional fees are required.

The application is being forwarded to the Certificates of Correction Branch for issuance of a certificate of correction. The Office will issue a certificate of correction indicating that the term of the patent is extended or adjusted by **five hundred sixty-six (566)** days.

Telephone inquiries specific to this decision should be directed to Senior Petitions Attorney Steven Brantley at (571) 272-3203.

Charles Steven Brantley
Senior Petitions Attorney
Office of Petitions

Enclosure: Copy of DRAFT Certificate of Correction

UNITED STATES PATENT AND TRADEMARK OFFICE

CERTIFICATE OF CORRECTION

PATENT NO.	:	8,062,904 B2
APPLICATION NO.	:	11/794,768
DATED	:	November 22, 2011
INVENTOR(S)	:	Christoph Gauer

DRAFT

It is certified that error appears in the above-identified patent and that said Letters Patent is hereby corrected as shown below:

On the Title page,

[*] Notice: Subject to any disclaimer, the term of this patent is extended or adjusted under 35 U.S.C. 154(b) by 563 days.

Delete the phrase "by 563 days" and insert -- by 566 days--

UNITED STATES PATENT AND TRADEMARK OFFICE

UNITED STATES DEPARTMENT OF COMMERCE
United States Patent and Trademark Office
Address: COMMISSIONER FOR PATENTS
P.O. Box 1450
Alexandria, Virginia 22313-1450
www.uspto.gov

APPLICATION NO.	FILING DATE	FIRST NAMED INVENTOR	ATTORNEY DOCKET NO.	CONFIRMATION NO.
11/794,775	07/05/2007	Ayano Matsuo	TOS-180-USA-PCT	5279

27955 7590 11/18/2010
TOWNSEND & BANTA
c/o PORTFOLIO IP
PO BOX 52050
MINNEAPOLIS, MN 55402

EXAMINER
MATTISON, LORI K

ART UNIT	PAPER NUMBER
1619	

MAIL DATE	DELIVERY MODE
11/18/2010	PAPER

Please find below and/or attached an Office communication concerning this application or proceeding.

The time period for reply, if any, is set in the attached communication.

UNITED STATES PATENT AND TRADEMARK OFFICE

Commissioner for Patents
United States Patent and Trademark Office
P.O. Box 1450
Alexandria, VA 22313-1450
www.uspto.gov

NOV 1 8 2010

TOWNSEND & BANTA
c/o PORTFOLIO IP
PO BOX 52050
MINNEAPOLIS MN 55402

In re Application of	:	
MATSUO, AYANO et. al.	:	DECISION ON REQUEST TO
Application No. 11/794,775	:	PARTICIPATE IN PATENT
Filed: July 05, 2010	:	PROSECUTION HIGHWAY
Attorney Docket No. TOS-180-USA-PCT	:	PROGRAM AND PETITION
	:	TO MAKE SPECIAL UNDER
	:	37 CFR 1.102(d)

This is a decision on the request to participate in the Patent Prosecution Highway (PPH) program and the petition under 37 CFR 1.102(d), filed August 26, 2010, to make the above-identified application special.

The request and petition are **GRANTED**.

A grantable request to participate in the PPH program and petition to make special require:

(1) The U.S. application must validly claim priority under 35 U.S.C. 119(a) to one or more applications filed in the JPO;
(2) Applicant must submit a copy of the allowable/patentable claim(s) from the JPO application(s) along with an English translation thereof and a statement that the English translation is accurate;
(3) All the claims in the U.S. application must sufficiently correspond or be amended to sufficiently correspond to the allowable/patentable claim(s) in the JPO application(s);
(4) Examination of the U.S. application has not begun;
(5) Applicant must submit a copy of all the office actions from each of the JPO application(s) containing the allowable/patentable claim(s) along with an English translation thereof and a statement that the English translation is accurate; and
(6) Applicant must submit an IDS listing the documents cited by the JPO examiner in the JPO office action along with copies of documents except U.S. patents or U.S. patent application publications.

The request to participate in the PPH program and petition comply with the above requirements. Accordingly, the above-identified application has been accorded "special" status.

Telephone inquiries concerning this decision should be directed to Ram R. Shukla at 571-272-0735.

All other inquiries concerning the examination or status of the application should be directed to Patent Application Information Retrieval (PAIR) system at the http://www.uspto.gov/ebc/index.html.

The application is being forwarded to the examiner for action on the merits commensurate with this decision.

Ram R. Shukla, Ph.D.
Supervisory Patent Examiner
TC 1600

RAM R. SHUKLA, PH.D.
SUPERVISORY PATENT EXAMINER

UNITED STATES PATENT AND TRADEMARK OFFICE

Commissioner for Patents
United States Patent and Trademark Office
P.O. Box 1450
Alexandria, VA 22313-1450
www.uspto.gov

MAILED

NOV 24 2010

OFFICE OF PETITIONS

KING & SPALDING LLP
P.O. BOX 889
BELMONT CA 94002-0889

In re Application :
Ray F. Stewart :
Application No. 11/794,835 : DECISION ON APPLICATION
Filed: November 4, 2008 : FOR PATENT TERM ADJUSTMENT
Attorney Docket No. 43831-8004.US01 :

This is in response to the request for reconsideration filed October 22, 2010, under C.F.R. § 1.705(b). Applicants request that the patent term adjustment be measured from July 6, 2007, the date the application was filed, and recalculated from 143 to 838 days. Applicant requests this correction in part on the basis that the Office will take in excess of three years to issue this patent and is considered in light of the recent court decision in light of the Court of Appeals for the Federal Circuit's decision in *Wyeth v. Kappos*, 2009-1120 (Fed. Cir. 1-7-2010).

As the instant application for patent term adjustment requests reconsideration of the patent term adjustment as it relates to the Office's failure to issue the patent within three years of the filing date, the application for patent term adjustment under 37 CFR 1.705(b) is **DISMISSED as PREMATURE**.

Knowledge of the actual date the patent issues is required to calculate the amount, if any, of additional patent term patentees are entitled to for Office failure to issue the patent within three years. See 37 CFR 1.702(b). (This is true even where a request for continued examination (RCE) was filed). The computer will not undertake the § 1.702(b) calculation until the actual date of issuance of the patent has been determined. Likewise, the computer will not calculate any further Office delay under 37 CFR 1.702(a)(4) or applicant delay under 37 CFR 1.704(c)(10) until the actual date of issuance of the patent has been determined. As such, the Office cannot make a determination on the patent term adjustment relating to those provisions until the patent has issued.

Requesting reconsideration of the patent term adjustment to be indicated on the patent under 37 CFR 1.705(b) based on the initial determination of patent term adjustment and a projected issuance date of the patent (or even the filing date of the request for continued examination) is premature. Accordingly, it is appropriate to dismiss such a request as premature.

Rather than file an application for patent term adjustment under 37 CFR 1.705(b) contesting the 37 CFR 1.702(b) calculation at the time of the mailing of the notice of allowance, applicants are advised that they may wait until the time of the issuance of

the patent and file a request for reconsideration of the patent term adjustment pursuant to 37 CFR 1.705(d). As the USPTO does not calculate the amount of time earned pursuant to 37 CFR 1.702(b) until the time of the issuance of the patent, the Office will consider any request for reconsideration of the patent term adjustment due to an error in the calculation of 37 CFR 1.702(b) to be timely if the request for reconsideration is filed within two months of the issuance of the patent. However, as to all other bases for contesting the initial determination of patent term adjustment received with the notice of allowance, applicants must timely file an application for patent term adjustment prior to the payment of the issue fee.[1]

To the extent that applicant otherwise requests reconsideration of the patent term adjustment at the time of the mailing of the notice of allowance, the application for patent term adjustment is **DISMISSED**.

Applicant is advised that the Office has not failed to recognize the commencement date of this application. The date of commencement of the application is not used in calculating patent term adjustment until issuance when the period of Office delay is calculated for the Office taking in excess of three years to issue the patent. On the other hand, the date of completion (or fulfillment of the requirements of 371) of this application is November 4, 2008. (See Notice of Acceptance mailed January 21, 2009). This date was properly used in calculating the period of Office delay pursuant to 37 CFR §§1.702(a)(1) and 1.703(a)(1).

The Office acknowledges submission of the $200.00 fee set forth in 37 CFR 1.18(e) for consideration of the application for patent term adjustment under 37 CFR 1.705(b).

Any request for reconsideration of the patent term adjustment indicated on the patent must be timely filed within two months after issuance pursuant to 37 CFR 1.705(d) and must include payment of the required fee under 37 CFR 1.18(e).

The Office of Data Management has been advised of this decision. This application is being referred to the Office of Data Management for issuance of the patent.

Telephone inquiries specific to this decision should be directed to the undersigned at (571) 272-3212.

Patricia Faison-Ball

Patricia Faison-Ball
Senior Petitions Attorney
Office of Petitions

---

[1] For example, if applicants dispute both the calculation of patent term adjustment under 37 CFR 1.702(a)(1) for Office failure to mail a first Office action or notice of allowance not later than fourteen months after the date on which the application was filed, and under 37 CFR 1.702(b) for Office failure to issue a patent within three years of the actual filing date of the application, then applicants must still timely file an application for patent term adjustment prior to the payment of the issue fee to contest the calculation of Office delay in issuing a first Office action or notice of allowance. See 37 CFR 1.705(b) and 35 U.S.C. 154(b)(3)(B). A dispute as to the calculation of the § 1.702(a)(1) period raised on request for reconsideration of patent term adjustment under 37 CFR 1.705(d) will be dismissed as untimely filed.

UNITED STATES PATENT AND TRADEMARK OFFICE

Commissioner for Patents
United States Patent and Trademark Office
P.O. Box 1450
Alexandria, VA 22313-1450
www.uspto.gov

MAILED

NOV 08 2011

PCT LEGAL ADMINISTRATION

NUTTER MCCLENNEN & FISH LLP
SEAPORT WEST
155 SEAPORT BOULEVARD
BOSTON MA 02210-2604

In re Application of: ANGELINI, Marco, et al.
U.S. Application No.: 11/794,844
PCT No.: PCT/IB2006/000160
International Filing Date: 05 January 2006
Priority Date: 07 January 2005
Attorney's Docket No.: 107633-44
For: TRANSMITTED LIGHT FLUORESCENCE MICROSCOPE AND KIT FOR ADAPTING A MICROSCOPE TO THE TRANSMITTED LIGHT FLUORESCENCE WORKING MODE

DECISION ON PETITION UNDER 37 CFR 1.137(b)

The petition for revival under 37 CFR 1.137(b) filed on 04 May 2011 in the above-captioned application is hereby **GRANTED** as follows:

The present application became abandoned at midnight on 16 January 2008 due to the failure to submit a complete response to the "Notification Of Missing Requirements" (Form PCT/DO/EO/905) issued on 16 November 2007 and the "Notification Of Defective Response" (Form PCT/DO/EO/916) issued on 31 January 2008. The abandonment was confirmed in the "Notification Of Abandonment" (Form PCT/DO/EO/909) issued on 14 April 2011.

The present petition for revival was accompanied by the petition fee and the "required reply" in the form of a proper response to the Notification Of Missing Requirements, that is, an executed declaration in compliance with 37 CFR 1.497(d) and the surcharge for filing the declaration later than thirty months after the priority date. In addition, the petition includes a statement that "the entire delay in filing the required reply from the due date for the required reply until the filing of a grantable petition under 37 CFR 1.137(b) was unintentional."

It is noted that the present application has been abandoned for an extended period of time. The United States Patent and Trademark Office (USPTO) is relying on petitioner's duty of candor and good faith and accepting the statement that the entire delay in filing the required reply from the due date for the required reply until the filing of a grantable petition under 37 CFR 1.137(b) was unintentional. See Changes to Patent Practice and Procedure, 62 Fed Reg. at 53160 and 53178, 1203 Off. Gaz. Pat. Office at 88 and 103 (responses to comments 64 and 109)(applicant obligated under 37 CFR 10.18 to inquire into underlying facts and circumstances when providing the statement required by 37 CFR 1.137(b) to the Patent and Trademark Office).

It is also noted that the attorney signing the present statement of unintentional delay was not of record at the time of the abandonment and that it is therefore not apparent whether this attorney was in a position to have firsthand knowledge of the facts and circumstances of the delay at issue. Nevertheless, such statement is being treated as having been made as the result of a reasonable inquiry into the facts and circumstances of such delay. See 37 CFR 10.18(b) and Changes to Patent Practice and Procedure, Final Rule Notice, 62 Fed Reg. at 53131, 53178 (October 10, 1997), 1203 Off. Gaz. Pat. Office 63,103 (October 21, 1997). In the event that such an inquiry has not been made, petitioner must make such an inquiry. If such inquiry results in the discovery that it is not correct that the entire delay in filing the required reply from the due date for the reply until the filing of a grantable petition pursuant to 37 CFR 1.137(b) was unintentional, petitioner must notify this Office.

Based on the above, the requirements of 37 CFR 1.137(b) have been satisfied. Therefore, the request to revive the present national stage application is appropriately granted.

This application is being referred to the National Stage Processing Division of the Office of PCT Operations for further processing in accordance with this decision.

/RichardMRoss/

Richard M. Ross
Attorney Advisor
Office of PCT Legal Administration
Telephone: (571) 272-3296

SPE RESPONSE FOR CERTIFICATE OF CORRECTION

DATE : 1/3/2011 **Paper No.:** ——

TO SPE OF : ART UNIT 3672 Cgc mailroom date 12/9/10

SUBJECT : Request for Certificate of Correction for Appl. No.: 11/794847 Patent No.: 7798208 B2

Please respond to this request for a certificate of correction within 7 days.

FOR IFW FILES:

Please review the requested changes/corrections as shown in the **COCIN** document(s) in the IFW application image. No new matter should be introduced, nor should the scope or meaning of the claims be changed.

Please complete the response (see below) and forward the completed response to scanning using document code **COCX**.

FOR PAPER FILES:

Please review the requested changes/corrections as shown in the attached certificate of correction. Please complete this form (see below) and forward it with the file to:

Certificates of Correction Branch (CofC)
Randolph Square – 9D10-A
Palm Location 7580

Virginia Tolbert
Certificates of Correction Branch
571-272-0460

Thank You For Your Assistance

The request for issuing the above-identified correction(s) is hereby:
Note your decision on the appropriate box.

- ☒ **Approved** — All changes apply.
- ☐ **Approved in Part** — Specify below which changes **do not** apply.
- ☐ **Denied** — State the reasons for denial below.

Comments: _____

DAVID BAGNELL
SUPERVISORY PATENT EXAMINER 3672
TECHNOLOGY CENTER 3600

SPE RESPONSE FOR CERTIFICATE OF CORRECTION

Paper No.: ——

DATE : 4/5/2011

TO SPE OF : ART UNIT 3744

SUBJECT : Request for Certificate of Correction for Appl. No.: 11/194864 Patent No.: 7870757B2

CofC mailroom date: 4/1/2011

Please respond to this request for a certificate of correction within 7 days.

FOR IFW FILES:

Please review the requested changes/corrections as shown in the **COCIN** document(s) in the IFW application image. No new matter should be introduced, nor should the scope or meaning of the claims be changed.

Please complete the response (see below) and forward the completed response to scanning using document code **COCX**.

FOR PAPER FILES:

Please review the requested changes/corrections as shown in the attached certificate of correction. Please complete this form (see below) and forward it with the file to:

Certificates of Correction Branch (CofC)
Randolph Square – 9D10-A
Palm Location 7580

Virginia Tolbert
Certificates of Correction Branch
571-272-0460

Thank You For Your Assistance

The request for issuing the above-identified correction(s) is hereby:
Note your decision on the appropriate box.

- ☒ **Approved** — **All** changes apply.
- ☐ **Approved in Part** — Specify below which changes **do not** apply.
- ☐ **Denied** — State the reasons for denial below.

Comments: _____

/Cheryl J. Tyler/ — **SPE**

3744 — **Art Unit**

UNITED STATES PATENT AND TRADEMARK OFFICE

Commissioner for Patents
United States Patent and Trademark Office
P.O. Box 1450
Alexandria, VA 22313-1450
www.uspto.gov

HOWARD & HOWARD ATTORNEYS PLLC
450 WEST FOURTH STREET
ROYAL OAK, MI 48067

In re Application of	:	
Debbie Bailey, et al.	:	
Application No.: 11/794,924	:	ON PETITION
Filed: July 9, 2007	:	
Attorney Docket No.: DC10133 PCT1	:	

This is a decision on the petition, filed August 31, 2011, under 37 CFR 1.313(c)(2) to withdraw the above-identified application from issue after payment of the issue fee.

The petition is not signed by a registered patent attorney or patent agent of record. However, in accordance with 37 CFR 1.34, the signature of Mr. David M. LaPrairie appearing on the correspondence shall constitute a representation to the United States Patent and Trademark Office that he is authorized to represent the particular party on whose behalf he acts.

The petition is **GRANTED**.

The above-identified application is withdrawn from issue for consideration of a submission under 37 CFR 1.114 (request for continued examination). See 37 CFR 1.313(c)(2).

Petitioner is advised that the issue fee paid on July 28, 2011, cannot be refunded. If, however, this application is again allowed, petitioner may request that it be applied towards the issue fee required by the new Notice of Allowance.[1]

Telephone inquiries relating to this decision should be directed to the undersigned at (571) 272-3204.

The application is being referred to Technology Center AU 1765 for further processing of the request for continued examination under 37 CFR 1.114 and for consideration of the concurrently filed Information Disclosure Statement (IDS).

/SDB/

Sherry D. Brinkley
Petitions Examiner
Office of Petitions

---

[1] *The request to apply the issue fee to the new Notice may be satisfied by completing and returning the new Part B – Fee(s) Transmittal Form (along with any balance due at the time of submission). Petitioner is advised that the Issue Fee Transmittal Form must be completed and timely submitted to avoid abandonment of the application.*

UNITED STATES PATENT AND TRADEMARK OFFICE

Commissioner for Patents
United States Patent and Trademark Office
P.O. Box 1450
Alexandria, VA 22313-1450
www.uspto.gov

HOWARD & HOWARD ATTORNEYS, PLLC
450 WEST FOURTH STREET
ROYAL OAK, MI 48067

MAILED

AUG 29 2011

OFFICE OF PETITIONS

In re Application of	:	
Debbie Bailey, et al.	:	
Application No. 11/794,925	:	DECISION GRANTING PETITION
Filed: July 9, 2007	:	UNDER 37 CFR 1.313(c)(2)
Attorney Docket No. DC10187PCT1	:	

This is a decision on the renewed petition under 37 CFR 1.313(c)(2), filed August 26, 2011 to withdraw the above-identified application from issue after payment of the issue fee.

The petition is **GRANTED**.

The above-identified application is withdrawn from issue for consideration of a submission under 37 CFR 1.114 (request for continued examination). *See* 37 CFR 1.313(c)(2).

Petitioner is advised that the issue fee paid on July 14, 2011 cannot be refunded. If, however, this application is again allowed, petitioner may request that it be applied towards the issue fee required by the new Notice of Allowance.[1]

Telephone inquiries regarding this decision should be directed to undersigned at (571) 272-1642. All other inquiries regarding the examination or status of this application should be directed to the Technology Center.

This application is being referred to Technology Center AU 1717 for processing of the request for continued examination under 37 CFR 1.114 and for consideration of the concurrently filed information disclosure statement.

/AMW/
April M. Wise
Petitions Examiner
Office of Petitions

---

[1] *The request to apply the issue fee to the new Notice may be satisfied by completing and returning the new Part B – Fee(s) Transmittal Form (along with any balance due at the time of submission). Petitioner is advised that the Issue Fee Transmittal Form* ***must*** *be completed and timely submitted to avoid abandonment of the application.*

UNITED STATES PATENT AND TRADEMARK OFFICE

Commissioner for Patents
United States Patent and Trademark Office
P.O. Box 1450
Alexandria, VA 22313-1450
www.uspto.gov

HOWARD & HOWARD ATTORNEYS PLLC
450 WEST FOURTH STREET
ROYAL OAK MI 48067

MAILED

NOV 29 2011

OFFICE OF PETITIONS

In re Application of	:	
Debbie Bailey et al	:	
Application No. 11/794,925	:	DECISION ON PETITION
Filed: July 9, 2007	:	UNDER 37 CFR 1.313(c)(1)
Attorney Docket No. DC10187 PCT1	:	

This is a decision on the petition filed November 15, 2011 under 37 CFR 1.313(c), to withdraw the above-identified application from issue after payment of the issue fee.

The petition is **DISMISSED**.

37 CFR 1.313(c) provides that:

Once the issue fee has been paid, the application will not be withdrawn from issue upon petition by the applicant for any reason except:

(1) Unpatentability of one of more claims, which petition must be accompanied by an unequivocal statement that one or more claims are unpatentable, an amendment to such claim or claims, and an explanation as to how the amendment causes such claim or claims to be patentable;

(2) Consideration of a request for continued examination in compliance with 37 CFR 1.114; or

(3) Express abandonment of the application. Such express abandonment may be in favor of a continuing application.

Upon payment of the issue fee, an application will not be withdrawn from issue upon petition except for the reasons enumerated in 37 CFR 1.313(c). The circumstances of the above-identified application do not fall within any of those exceptions.

For the reason stated above, the petition under 37 CFR 1.313(c) cannot be granted.

The petitioner states "The Petition for Withdrawal from Issue and the Request for Continued Examination are being filed so that additional references can be considered by the Office. These references are disclosed in an Information Disclosure Statement submitted herewith." According, the Request for Continued Examination and the Information Disclosure Statement has not been received.

Petitioner is reminded that the filing of any renewed petition to withdraw from issue may not be recognized or effective if not received by the appropriate deciding official in time to act prior to issuance. *Note* 37 CFR 1.313(d).

Further correspondence with respect to this matter should be addressed as follows:

By hand: Customer Service Window
Mail Stop Petitions
Randolph Building
401 Dulany Street
Alexandria, VA 22314

By fax: (571) 273-0025
Office of Petitions

Any questions concerning this matter may be directed to Irvin Dingle at (571) 272-3210.

/Irvin Dingle/
Irvin Dingle
Petitions Examiner
Office of Petitions

UNITED STATES PATENT AND TRADEMARK OFFICE

UNITED STATES DEPARTMENT OF COMMERCE
United States Patent and Trademark Office
Address: COMMISSIONER FOR PATENTS
P.O. Box 1450
Alexandria, Virginia 22313-1450
www.uspto.gov

APPLICATION NO.	FILING DATE	FIRST NAMED INVENTOR	ATTORNEY DOCKET NO.	CONFIRMATION NO.
11/794,926	07/09/2007	Ihab Sussan	39990	6979

67801 7590 02/23/2012
MARTIN D. MOYNIHAN d/b/a PRTSI, INC.
P.O. BOX 16446
ARLINGTON, VA 22215

EXAMINER
MELLER, MICHAEL V

ART UNIT	PAPER NUMBER
1655	

MAIL DATE	DELIVERY MODE
02/23/2012	PAPER

Please find below and/or attached an Office communication concerning this application or proceeding.

The time period for reply, if any, is set in the attached communication.

UNITED STATES PATENT AND TRADEMARK OFFICE

Commissioner for Patents
United States Patent and Trademark Office
P.O. Box 1450
Alexandria, VA 22313-1450
www.uspto.gov

February 23, 2012

MARTIN D. MOYNIHAN d/b/a PRTSI, INC.
P.O. BOX 16446
ARLINGTON VA 22215

Re Application of
SUSSAN, IHAB, Et Al.
Application: **11/794926** : **DECISION ON PETITION**
Filed: **07/09/2007** : **ACCEPTANCE OF COLOR**
Attorney Docket No: **39990** : **DRAWINGS**

This is a decision on the Petition to Accept Color Drawings under 37 C.F.R 1.84 (a) (2), received in the United States Patent and Trademark Office (USPTO) July 9, 2007.
The petition is **GRANTED**.
A grantable petition under 37 C.F.R. 1.84(a) (2) must be accompanied by the following.

1. The fee set forth under 37 C.F.R. 1.17(h),
2. Three (3) sets of the color drawings in question, or (1) set if filed via EFS, and
3. The specification containing the following language as the first paragraph in that portion of the specification relating to the brief description of the drawings.

   "The file of this patent contains at least one drawing executed in color. Copies of this patent with color drawing(s) will be provided by the Patent and Trademark Office upon request and payment of the necessary fee."

The petition was accompanied by all of the required fees and drawings. The specification contains the appropriate language. Therefore, the petition is GRANTED.

Telephone inquires relating to this decision may be directed to the undersigned in the Office of Data Management at 571-272-4200.

/Bernadette Queen/
Quality Control Specialist
Office of Data Management
Publications Branch

UNITED STATES PATENT AND TRADEMARK OFFICE

Commissioner for Patents
United States Patent and Trademark Office
P.O. Box 1450
Alexandria, VA 22313-1450
www.uspto.gov

Patent No. : 7,740,712 B2
Ser. No. : 11/794,958
Inventor(s) : Bechini
Issued : Jun. 22, 2010
Title : UNIT FOR WASHING CONTAINERS
Docket No. : AMK-4017-122
Re: Request for Certificate of Correction

Consideration has been given your request for the issuance of a certificate of correction for the above-identified patent under the provisions of Rule(s) 1.322 and/or 1.323.

Assignees' names and addresses (assignment data) printed in a patent, are based *solely* on information supplied in the appropriate space for identifying the assignment data, i.e., item 3 of the Issue Fee Transmittal Form PTOL-85B. Granting of a request under 37 CFR 3.81(b) is required to correct applicant's error providing ***incorrect or erroneous*** assignment data, *before* issuance of a Certificate of Correction, under 37 CFR 1.323 *(see Manual of Patent Examining Procedures (M.P.E.P) Chp.1400, sect. 1481).* This procedure is required *at any time after the issue fee is paid,* including after issuance of the patent.

In view of the foregoing, your request, in this matter, is hereby denied.

A request to correct the Assignee under 37 CFR 3.81(b) should include:

A. **the processing fee set forth in 37 CFR 1. 17(i) (currently $130);**
B. a statement that the failure to include the correct assignee name on the PTOL-85B was inadvertent; and
C. a copy of the Notice of Recordation of Assignment Document, reflecting the reel and frame number where the assignment(s) is recorded and/or reflecting proof of *the date* the assignment was submitted for recordation.

In the Request, Applicant(s) may request that the file be forwarded to Certificates of Correction Branch, for issuance of a Certificate of Correction, if the Request is granted.

Any request under 37 CFR 3.81(b) should be directed to the following address or facsimile number:

By mail: Mail Stop PETITIONS
Commissioner for Patents
Post Office Box 1450
Alexandria, VA 22313-1450

By hand: Customer Service Window
Mail Stop Petitions
Randolph Building
401 Dulany Street
Alexandria, VA 22314

By fax: (703) 872-9306
ATTN: Office of Petitions

If a fee (currently $100) was previously submitted for consideration of a Request for Certificate of Correction, under CFR 1.323, to correct assignment data, no additional fee is required.

Ennis Young
For Mary Diggs
Decisions & Certificates
of Correction Branch
(571) **272-3435** or (703) 756-1814

UNITED STATES PATENT AND TRADEMARK OFFICE

Commissioner for Patents
United States Patent and Trademark Office
P.O. Box 1450
Alexandria, VA 22313-1450
www.uspto.gov

MAILED

DEC 07 2010

OFFICE OF PETITIONS

NIXON & VANDERHYE, PC
901 NORTH GLEBE ROAD, 11TH FLOOR
ARLINGTON VA 22203

In re Patent No. 7,740,712 :
Issued: June 22, 2010 :
Application No. 11/794,958 : DECISION ON PETITION
Filed: July 10, 2007 :
Attorney Docket No. AMK-4017-122 :

This is a decision on the petition, filed, November 16, 2010, which is being treated as a request under 37 CFR 3.81(b)[1] to correct the assignee's name and residence on the Letters Patent by way of a certificate of correction in the above-identified patent.

The request is GRANTED.

Petitioner states that the correct assignee's name is "IMA LIFE S.R.L." and that the incorrect assignee's name was included on the Fee(s) Transmittal form PTOL-85(b) at the time of payment of the issue fee.

37 CFR 3.81(b), effective June 25, 2004, reads:

> *After payment of the issue fee:* Any request for issuance of an application in the name of the assignee submitted after the date of payment of the issue fee, and any request for a patent to be corrected to state the name of the assignee, must state that the assignment was submitted for recordation as set forth in § 3.11 before issuance of the patent, and must include a request for a certificate of correction under § 1.323 of this chapter (accompanied by the fee set forth in § 1.20(a) and the processing fee set forth in § 1.17(i) of this chapter).

The request was accompanied by a certificate of correction (and fee) as required by 3.81(b). Further, Office assignment records reflect that "IMA LIFE S.R.L." is the assignee of record. Accordingly, as the request complies with the provisions of 37 CFR 3.81(b), it would be appropriate to issue a certificate of correction.

[1] *See* MPEP 1309, subsection II; and Official Gazette of June 22, 2004.

Inquiries concerning this decision should be directed to the undersigned at (571) 272-3205. Any questions concerning the issuance of a certificate of correction should be directed to the Certificates of Correction Branch at (571) 272-4200.

This matter is being referred to the Certificates of Correction Branch for processing of a certificate of correction after issuance of this application into a patent.

/ALESIA M. BROWN/

Alesia M. Brown
Petitions Attorney
Office of Petitions

UNITED STATES PATENT AND TRADEMARK OFFICE

Commissioner for Patents
United States Patent and Trademark Office
P.O. Box 1450
Alexandria, VA 22313-1450
www.uspto.gov

DAVID BOGART DORT
STEALTHDRIVE LLC
BOX 26219
CRYSTAL CITY STATION
ARLINGTON, VA 22215

MAILED
NOV 19 2010
OFFICE OF PETITIONS

In re Application of	:	
Paul Douglas Cochrane	:	
Application No. 11/795,050	:	DECISION ON PETITION
Filed: July 10, 2007	:	
Attorney Docket No. TORP.P010.US	:	

This is a decision on the petition, filed October 20, 2010, which is being treated as a petition under 37 CFR 1.8(b), requesting withdrawal of the holding of abandonment in the above-identified application.

The petition is **GRANTED**.

This application was held abandoned for failure to timely respond to non-final Office action mailed March 29, 2010, which set a three (3) month shortened statutory period for reply. Accordingly, a reply was due on or before September 29, 2010 with a three month extension of time. A Notice of Abandonment was mailed October 15, 2010.

Petitioner asserts that a timely reply was mailed via certificate of mailing on September 29, 2010, which included the following papers: a fee transmittal for a three (3) month extension of time and an amendment.

Petitioner has submitted a copy of the previously filed correspondence, which bears a certificate of mailing dated September 29, 2010, which does in fact render the reply timely.

The petition satisfies the requirements of 37 CFR 1.8(b). Accordingly, the holding of abandonment for failure to timely file a reply to the Office action of March 29, 2010, is hereby withdrawn and the application restored to pending status.

The file does not indicate a change of address has been submitted, although the address given on the petition differs from the address of record. If appropriate, a change of address should be filed in accordance with MPEP 601.03. A courtesy copy of this decision is being mailed to the address given on the petition; however, the Office will mail all future correspondence solely to the address of record.

This application is being referred to Technology Center AU 2835 for appropriate action in the normal course of business on the reply received September 29, 2010 via certificate of mailing date.

Telephone inquiries concerning this decision should be directed to Alicia Kelley at (571) 272 6059.

/Carl Friedman/
Carl Friedman
Petitions Examiner
Office of Petitions

cc: DAVID BOGART DORT
VRBIA, INC.
BOX 320069
ALEXANDRIA, VA 22320

UNITED STATES PATENT AND TRADEMARK OFFICE

Commissioner for Patents
United States Patent and Trademark Office
P.O. Box 1450
Alexandria, VA 22313-1450
www.uspto.gov

MAILED
NOV 21 2011
OFFICE OF PETITIONS

MERCHANT & GOULD PC
P.O. BOX 2903
MINNEAPOLIS MN 55402-0903

In re Application of	:	DECISION ON PETITION
Jorgen Karlsen	:	UNDER 37 CFR 1.55
Application No. 11/795,090	:	
Filed: April 11, 2008	:	
Atty Docket No. **07885.0106USWO**	:	

This is a decision on the Petition For Unintentionally Delayed Benefit Claim, filed October 6, 2011, requesting that the Office accept an unintentionally delayed benefit claim for the benefit of priority to Norway Application No. 2005/0221.

The petition is **DISMISSED as inappropriate.**

A petition for acceptance of a claim for late priority under 37 CFR § 1.55 is not applicable to the instant situation.

This application is a national stage of PCT/NO2006/000013 filed on January 12, 2006. Petitioner acknowledges that at the PCT stage and at the national stage, the Norway application to which the late claim of priority is sought was incorrectly identified as NO 20050221 (instead of correctly as NO 20050220). Further, the time limit under the Patent Cooperation Treaty Regulations for correcting the priority claim in the international application has expired.

In an application that entered the national stage from an international application after compliance with 35 U.S.C. 371, the claim for priority must be made during the pendency of the application and within the time limit set forth in the PCT and the Regulations under the PCT. See 37 CFR 1.55(a)(1)(ii).

As the claim for priority was not made within the time limit set forth in the PCT and the Regulations under the PCT, the provisions for accepting a late claim under 37 CFR 1.55 are not applicable to this national stage application.

In view of the above, the surcharge fee submitted with the petition is unnecessary and will be refunded to petitioner in due course.

Petitioner is not precluded from correcting this error in the claim for foreign priority by making the correct claim in a later filed application (i.e., continuation, continuation-in-part, or division).

Telephone inquiries regarding this decision may be directed to the undersigned at 571-272-3219.

Nancy Johnson
Senior Petitions Attorney
Office of Petitions

SPE RESPONSE FOR CERTIFICATE OF CORRECTION

Paper No.: _____

DATE : 12/20/11

TO SPE OF : ART UNIT: 1733

SUBJECT : Request for Certificate of Correction for Appl. No.: 11/795,115 Patent No. 7,389,917

CofC mailroom date 12/12/11

Please respond to this request for a certificate of correction within 7 days.

FOR IFW FILES:

Please review the requested changes/corrections as shown in the **COCIN** document(s) in the IFW application image. No new matter should be introduced, nor should the scope or meaning of the claims be changed.

Please complete the response (see below) and forward the completed response to scanning using document code **COCX**.

FOR PAPER FILES:

Please review the requested changes/corrections as shown in the attached certificate of correction. Please complete this form (see below) and forward it with the file to:

Certificates of Correction Branch (CofC)
Randolph Square – 9D10-A
Palm Location 7580

Ernest C. White, LIE

Certificates of Correction Branch

703-756-1814

Thank You For Your Assistance

The request for issuing the above-identified correction(s) is hereby:
Note your decision on the appropriate box.

X	**Approved**	**All** changes apply.
☐	**Approved in Part**	Specify below which changes **do not** apply.
☐	**Denied**	State the reasons for denial below.

Comments: **The error to be corrected appears in patent as a result from a typo-graphical or clerical error and occurred in good faith. The correction does not involve changes in the patent so as to represent new matter of require reexamination of the claims.**

SPE: /JESSICA WARD/ **Art Unit: 1735**

Jessica Ward 12/21/11

UNITED STATES PATENT AND TRADEMARK OFFICE

Commissioner for Patents
United States Patent and Trademark Office
P.O. Box 1450
Alexandria, VA 22313-1450
www.uspto.gov

NIXON & VANDERHYE, PC
901 NORTH GLEBE ROAD, 11TH FLOOR
ARLINGTON VA 22203

MAILED
JAN 13 2012
OFFICE OF PETITIONS

In re Patent No. 7581367	:	
Issue Date: 09/01/2009	:	
Application No. 11/795,133	:	ON PETITION
Filed: 07/12/2007	:	
Attorney Docket No. AMK-4017-108	:	

This is a decision on the petition under 37 CFR 3.81(b) filed April 11, 2011.

Patentees request correction of the front page of the Letters Patent to include the correct assignee data via Certificate of Correction. With the present request, patentees submitted a completed Certificate of Correction form and paid the requisite fees. Furthermore, it is noted that the assignment was recorded with the USPTO prior to the issuance of the patent.

In view of the above, the request under 37 CFR 3.81(b) to correct the assignee data is GRANTED.

The Certificates of Correction Branch will be notified of this decision granting the petition under 37 CFR 3.81(b) and directing issuance of the requested Certificate of Correction as to the assignment information.

Telephone inquiries concerning this decision may be directed to the undersigned at (571) 272-3211. Inquiries regarding the issuance of a certificate of correction should be directed to the Certificate of Correction Branch.

C. T. Donnell
Christina Tartera Donnell
Senior Petitions Attorney
Office of Petitions

UNITED STATES PATENT AND TRADEMARK OFFICE

Commissioner for Patents
United States Patent and Trademark Office
P.O. Box 1450
Alexandria, VA 22313-1450
www.uspto.gov

Patent No. : 7,581,367 B2
Ser. No. : 11/795,133
Inventor(s) : Bechini
Issued : Sep. 1, 2009
Title : COMPACT SYSTEM FOR PACKAGING INJECTABLE LIQUID PRODUCTS INTO CONTAINERS IN A STERILE ENVIRONMENT
Docket No. : AMK-4017-108
Re: Request for Certificate of Correction

Consideration has been given your request for the issuance of a certificate of correction for the above-identified patent under the provisions of Rule(s) 1.322 and/or 1.323.

Assignees' names and addresses (assignment data) printed in a patent, are based *solely* on information supplied in the appropriate space for identifying the assignment data, i.e., item 3 of the Issue Fee Transmittal Form PTOL-85B. Granting of a request under 37 CFR 3.81(b) is required to correct applicant's error providing ***incorrect or erroneous*** assignment data, *before* issuance of a Certificate of Correction, under 37 CFR 1.323 *(see Manual of Patent Examining Procedures (M.P.E.P) Chp.1400, sect. 1481).* This procedure is required *at any time after the issue fee is paid*, including after issuance of the patent.

In view of the foregoing, your request, in this matter, is hereby denied.

A request to correct the Assignee under 37 CFR 3.81(b) should include:

A. **the processing fee set forth in 37 CFR 1. 17(i) (currently $130);**
B. a statement that the failure to include the correct assignee name on the PTOL-85B was inadvertent; and
C. a copy of the Notice of Recordation of Assignment Document, reflecting the reel and frame number where the assignment(s) is recorded and/or reflecting proof of *the date* the assignment was submitted for recordation.

In the Request, Applicant(s) may request that the file be forwarded to Certificates of Correction Branch, for issuance of a Certificate of Correction, if the Request is granted.

Any request under 37 CFR 3.81(b) should be directed to the following address or facsimile number:

By mail: Mail Stop PETITIONS
Commissioner for Patents
Post Office Box 1450
Alexandria, VA 22313-1450

By hand: Customer Service Window
Mail Stop Petitions
Randolph Building
401 Dulany Street
Alexandria, VA 22314

By fax: (703) 872-9306
ATTN: Office of Petitions

If a fee (currently $100) was previously submitted for consideration of a Request for Certificate of Correction, under CFR 1.323, to correct assignment data, no additional fee is required.

Ennis Young
For Mary Diggs
Decisions & Certificates
of Correction Branch
(571) **272-3435** or (703) 756-1814

UNITED STATES PATENT AND TRADEMARK OFFICE

Commissioner for Patents
United States Patent and Trademark Office
P.O. Box 1450
Alexandria, VA 22313-1450
www.uspto.gov

March 23, 2011

Patent No. : 7,879,979 B2
Appl. No. : 11/795,173
Inventor(s) : Kenneth F. Buechler, et al.
Issued : February 1, 2011
Title : **ARGININE ANALOGS, AND METHODS FOR THEIR SYNTHESIS AND USE**
Docket No. : **36671-748.831**

Re: Request for Certificate of Correction

Consideration has been given your request for the issuance of a certificate of correction for the above-identified patent under the provisions of Rule 1.323.

Assignees' names and addresses (assignment data) printed in a patent, are based *solely* on information supplied in the appropriate space for identifying the assignment data, i.e., item 3 of the Issue Fee Transmittal Form PTOL-85B. Granting of a request under 37 CFR 3.81(b) is required to correct applicant's error providing ***incorrect or erroneous*** assignment data, *before* issuance of a Certificate of Correction under 37 CFR 1.323 *(see Manual of Patent Examining Procedures (M.P.E.P) Chp.1400, sect. 1481).* This procedure is required *at any time after the issue fee is paid*, including after issuance of the patent.

In view of the foregoing, your request, in this mater, is hereby denied.

All petitions for correction of Assignees' names under rule 3.81(b) should:

(A) state that the assignment was submitted for recordation as set forth in 37 CFR 3.11 before issuance of the patent;

(B) include a request for a certificate of correction under 37 CFR 1.323 along with the fee set forth in 37 CFR 1.20(a); (unless fee (currently $100) was previously paid for consideration of request for certificate of correction)

(C) include the processing fee set forth in 37 CFR 1.17(i).

The petition under 37 CFR 3.81(b) should be directed to the following address or facsimile number:

By mail: Mail Stop PETITIONS
Commissioner for Patents
Post Office Box 1450
Alexandria, VA 22313-1450

By hand: Customer Service Window
Mail Stop Petitions
Randolph Building
401 Dulany Street
Alexandria, VA 22314
(Hours of operation are 8:30 a.m. to midnight, Eastern Standard Time, Monday through Friday)

By fax: (571) 273-8300
ATTN: Office of Petitions

Antonio Johnson
For Mary F. Diggs
Decisions & Certificates
of Correction Branch
(571)272-0483

WILSON, SONSINI, GOODRICH & ROSATI
650 PAGE MILL ROAD
PALO ALTO CA 94304-1050

RECEIVED
CENTRAL FAX CENTER
MAY 26 2011

PATENT
Attorney Docket No. 36671-748.831

IN THE UNITED STATES PATENT AND TRADEMARK OFFICE

Inventor(s): BUECHLER, et al.

Serial Number: 11/795,173

Filing Date: August 8, 2008

Issued Patent No.: 7,879,979

Issued: February 1, 2011

Title: **Arginine Analogs, and Methods for their Synthesis and Use**

CONFIRMATION NO: 9842

Group Art No. 1628

REQUEST FOR CERTIFICATE OF CORRECTION OF THE ISSUED PATENT
APPLICANTS MISTAKE (37 C.F.R. §3.81(b))

Commissioner for Patents
P.O. Box 1450
Alexandria, VA 22313-1450
ATTN: Certificate of Correction Branch

Sir/Madam:

Applicants respectfully re-submits Request for Certificate of Correction to comply with the Office Communication dated March 23, 2011 under Rule 3.81(b).

It is noted that an error of minor nature or character appears in this U.S. Patent No. 7,879,979, issued February 1, 2011, due to a mistake on the part of the Applicants as more fully described below. The Patentee believes that correction thereof does not involve such changes in the patent as would constitute new matter or would require re-examination of the patent. A Certificate of Correction is therefore respectfully requested.

MISTAKE ON THE PART OF APPLICANT:

Please change the name of the Assignee under (73) from Alere International, Waltham, MA (US) to Alere San Diego, Inc., San Diego, CA (US).

PAGE 2/10 * RCVD AT 5/26/2011 6:05:19 PM [Eastern Daylight Time] * SVR:W-PTOFAX-002/36 * DNIS:2738300 * CSID: * DURATION (mm-ss):02-50

U.S. Patent No. 7,879,979
Request for Certificate of
Correction of the Issued Patent

FEE AUTHORIZATION

The Applicant believe that there is no fee associated with this re-submission, however, the Commissioner is authorized to charge any additional fees which may be required, including petition fees, or credit any overpayment to Deposit Account No. 23-2415 (Docket No. 36671-748.831).

Respectfully submitted,

Dated: May 26, 2011

By: _____
Anavelys Ortiz-Suarez
Reg. No. 63,535

WILSON SONSINI GOODRICH & ROSATI
650 Page Mill Road
Palo Alto, California 94304
Telephone: 650-493-9300
Customer No. 21971

PAGE 3/10 * RCVD AT 5/26/2011 6:05:19 PM [Eastern Daylight Time] * SVR:W-PTOFAX-002/36 * DNIS:2738300 * CSID: * DURATION (mm-ss):02-50

PTO/SB/44 (09-07)
Approved for use through 08/31/2010. OMB 0651-0033
U.S. Patent and Trademark Office; U.S. DEPARTMENT OF COMMERCE
Under the Paperwork Reduction Act of 1995, no persons are required to respond to a collection of information unless it displays a valid OMB control number.
(Also Form PTO-1050)

UNITED STATES PATENT AND TRADEMARK OFFICE

CERTIFICATE OF CORRECTION

PATENT NO. : 7,879,979

APPLICATION NO. : 11/795,173

ISSUE DATE : February 1, 2011

INVENTOR(S) : BUECHLER, et al.

It is certified that an error appears or errors appear in the above-identified patent and that said Letters Patent is hereby corrected as shown below:

In Item (73) Assignee: Please change the name of Assignee as "Alere San Diego, Inc., San Diego, CA (US)".

MAILING ADDRESS OF SENDER: (Please do not use customer number below)
Wilson Sonsini Goodrich & Rosati
650 Page Mill Road
Palo Alto, CA 94304

This collection of information is required by 37 CFR 1.322, 1.323, and 1.324. The information is required to obtain or retain a benefit by the public which is to file (and by the USPTO to process) an application. Confidentiality is governed by 35 U.S.C. 122 and 37 CFR 1.14. This collection is estimated to take 1.0 hour to complete, including gathering, preparing, and submitting the completed application form to the USPTO. Time will vary depending upon the individual case. Any comments on the amount of time you require to complete this form and/or suggestions for reducing this burden, should be sent to the Chief Information Officer, U.S. Patent and Trademark Office, U.S. Department of Commerce, P.O. 1450, Alexandria, VA 22313-1450. DO NOT SEND FEES OR COMPLETED FORMS TO THIS ADDRESS. SEND TO: **Attention Certificate of Corrections Branch, Commissioner for Patents, P.O. Box 1450, Alexandria, VA 22313-1450.**

If you need assistance in completing the form, call 1-800-PTO-9199 and select option 2.

4285014_1.DOC

RECEIVED
CENTRAL FAX CENTER
MAY 2 6 2011

Attorney Docket No.: 36671-748.831

IN THE UNITED STATES PATENT AND TRADEMARK OFFICE

Inventor(s): BUECHLER, et al.	**CONFIRMATION NO: 9842**
Serial Number: 11/795,173	**Group Art No. 1628**
Filing Date: August 8, 2008	
Issued Patent No.: 7,879,979	
Issued: February 1, 2011	
Title: **Arginine Analogs, and Methods for their Synthesis and Use**	

STATEMENT

Commissioner for Patents
P.O. Box 1450
Alexandria, Virginia 22313-1450

Sir or Madam:

In connection with the Request for Certificate of Correction of the issued patent submitted concurrently herewith, the undersigned hereby states that an incorrect assignee name was inadvertently set forth in error. It is unfortunate that the assignment was submitted for recordation after the issuance of the patent. The Applicant therefore respectfully request to correct the Assignee as Alere San Diego, San Diego, CA. A Certificate of Correction is therefore requested.

The Applicant believe that there is no fee associated with this re-submission; however, the Commissioner is hereby authorized to charge any required fees due in connection with this submission, including petition and extension of time fees, and to credit any overpayment, to Deposit Account No. 23-2415 (Docket No.: 36671-748.831).

Respectfully submitted,

WILSON SONSINI GOODRICH & ROSATI

Date: May 26, 2011 By: _____
Anavelys Ortiz-Suarez
Registration No. 63,535

Wilson Sonsini Goodrich & Rosati
650 Page Mill Road
Palo Alto, California 94304
Telephone No.: (650) 493-9300
Facsimile No.: (650) 493-6811

RECEIVED
MAR 23 2011
WILSON SONSINI GOODRICH & ROSATI

Alere/36671-748.831
VN1/MCN/ASU/QN21

RECEIVED
CENTRAL FAX CENTER
MAY 26 2011

UNITED STATES PATENT AND TRADEMARK OFFICE

UNDER SECRETARY OF COMMERCE FOR INTELLECTUAL PROPERTY AND DIRECTOR OF THE UNITED STATES PATENT AND TRADEMARK OFFICE

MARCH 14, 2011

PTAS

WILSON SONSINI GOODRICH & ROSATI
650 PAGE MILL ROAD
PALO ALTO, CA 94304

501463391

UNITED STATES PATENT AND TRADEMARK OFFICE
NOTICE OF RECORDATION OF ASSIGNMENT DOCUMENT

THE ENCLOSED DOCUMENT HAS BEEN RECORDED BY THE ASSIGNMENT DIVISION OF THE U.S. PATENT AND TRADEMARK OFFICE. A COMPLETE MICROFILM COPY IS AVAILABLE AT THE ASSIGNMENT SEARCH ROOM ON THE REEL AND FRAME NUMBER REFERENCED BELOW.

PLEASE REVIEW ALL INFORMATION CONTAINED ON THIS NOTICE. THE INFORMATION CONTAINED ON THIS RECORDATION NOTICE REFLECTS THE DATA PRESENT IN THE PATENT AND TRADEMARK ASSIGNMENT SYSTEM. IF YOU SHOULD FIND ANY ERRORS OR HAVE QUESTIONS CONCERNING THIS NOTICE, YOU MAY CONTACT THE EMPLOYEE WHOSE NAME APPEARS ON THIS NOTICE AT 571-272-3350. PLEASE SEND REQUEST FOR CORRECTION TO: U.S. PATENT AND TRADEMARK OFFICE, MAIL STOP: ASSIGNMENT SERVICES BRANCH, P.O. BOX 1450, ALEXANDRIA, VA 22313.

RECORDATION DATE: 03/10/2011 REEL/FRAME: 025939/0766
NUMBER OF PAGES: 2

BRIEF: ASSIGNMENT OF ASSIGNOR'S INTEREST (SEE DOCUMENT FOR DETAILS).
DOCKET NUMBER: 36671-748.831

ASSIGNOR:
BIOSITE INCORPORATED DOC DATE: 07/01/2010

ASSIGNEE:
ALERE SAN DIEGO, INC.
9975 SUMMERS RIDGE ROAD
PALO ALTO, CALIFORNIA 92121

ENTERED
MAR 23 2011
WILSON SONSINI GOODRICH & ROSATI

P.O. Box 1450, Alexandria, Virginia 22313-1450 - www.uspto.gov

C25939/0766 PAGE 2

APPLICATION NUMBER: 11795173 FILING DATE: 08/08/2008
PATENT NUMBER: 7879979 ISSUE DATE: 02/01/2011
TITLE: ARGININE ANALOGS, AND METHODS FOR THEIR SYNTHESIS AND USE

STEVEN POST, EXAMINER
ASSIGNMENT SERVICES BRANCH
PUBLIC RECORDS DIVISION

PATENT ASSIGNMENT

RECEIVED
CENTRAL FAX CENTER
MAY 2 6 2011

Electronic Version v1.1
Stylesheet Version v1.1

03/10/2011
501463391

SUBMISSION TYPE:	NEW ASSIGNMENT
NATURE OF CONVEYANCE:	ASSIGNMENT

CONVEYING PARTY DATA

Name	Execution Date
Bioslte Incorporated	07/01/2010

RECEIVING PARTY DATA

Name:	Alere San Diego, Inc.
Street Address:	9975 Summers Ridge Road
City:	Palo Alto
State/Country:	CALIFORNIA
Postal Code:	92121

PROPERTY NUMBERS Total: 1

Property Type	Number
Application Number:	11795173

CORRESPONDENCE DATA

Fax Number: (650)493-6811
Correspondence will be sent via US Mail when the fax attempt is unsuccessful.
Phone: (650) 493-9300
Email: tsalvacion@wsgr.com
Correspondent Name: Wilson Sonsini Goodrich & Rosati
Address Line 1: 650 Page Mill Road
Address Line 4: Palo Alto, CALIFORNIA 94304

ATTORNEY DOCKET NUMBER:	36671-748.831
NAME OF SUBMITTER:	Terry Salvacion

Total Attachments: 1
source=BiositeToAlere#page1.tif

CH $40.00 11795173

alere\366+1-748.831
VN1\MCN\ASU\QN2\JALT

UNITED STATES PATENT AND TRADEMARK OFFICE

Commissioner for Patents
United States Patent and Trademark Office
P.O. Box 1450
Alexandria, VA 22313-1450
www.uspto.gov

RECEIVED
CENTRAL FAX CENTER
MAY 26 2011

RECEIVED
APR 04 2011
WILSON, SONSINI, GOODRICH & ROSATI

DOCKETED

March 23, 2011

Patent No. : 7,879,979 B2
Appl. No. : 11/795,173
Inventor(s) : Kenneth F. Buechler, et al.
Issued : February 1, 2011
Title : **ARGININE ANALOGS, AND METHODS FOR THEIR SYNTHESIS AND USE**
Docket No. : **36671-748.831**

Re: Request for Certificate of Correction

Consideration has been given your request for the issuance of a certificate of correction for the above-identified patent under the provisions of Rule 1.323.

Assignees' names and addresses (assignment data) printed in a patent, are based *solely* on information supplied in the appropriate space for identifying the assignment data, i.e., item 3 of the Issue Fee Transmittal Form PTOL-85B. Granting of a request under 37 CFR 3.81(b) is required to correct applicant's error providing ***incorrect or erroneous*** assignment data, *before* issuance of a Certificate of Correction under 37 CFR 1.323 *(see Manual of Patent Examining Procedures (M.P.E.P) Chp.1400, sect. 1481).* This procedure is required *at any time after the issue fee is paid,* including after issuance of the patent.

In view of the foregoing, your request, in this mater, is hereby denied.

All petitions for correction of Assignees' names under rule 3.81(b) should:

(A) state that the assignment was submitted for recordation as set forth in 37 CFR 3.11 before issuance of the patent;

(B) include a request for a certificate of correction under 37 CFR 1.323 along with the fee set forth in 37 CFR 1.20(a); (unless fee (currently $100) was previously paid for consideration of request for certificate of correction)

(C) include the processing fee set forth in 37 CFR 1.17(i).

The petition under 37 CFR 3.81(b) should be directed to the following address or facsimile number:

By mail: Mail Stop PETITIONS
Commissioner for Patents
Post Office Box 1450
Alexandria, VA 22313-1450

By hand: Customer Service Window
Mail Stop Petitions
Randolph Building
401 Dulany Street
Alexandria, VA 22314
(Hours of operation are 8:30 a.m. to midnight, Eastern Standard Time, Monday through Friday)

By fax: (571) 273-8300
ATTN: Office of Petitions

Antonio Johnson
For Mary F. Diggs
Decisions & Certificates
of Correction Branch
(571)272-0483

WILSON, SONSINI, GOODRICH & ROSATI
650 PAGE MILL ROAD
PALO ALTO CA 94304-1050

WSGR Wilson Sonsini Goodrich & Rosati
PROFESSIONAL CORPORATION

RECEIVED
CENTRAL FAX CENTER
MAY 26 2011

Date: May 26, 2011

To: Office of Petitions **Fax:** (571) 273-8300 ☐ Use this fax number only

Company: USPTO **Phone:** ☐ Notify recipient before sending

From: Anavelys Ortiz-Suarez **Phone:** 650-493-9300 **Return Fax:** 650-493-6811

Original: ☐ To follow via mail ☐ To follow via courier ☐ To follow via email ☒ Original will not follow

Fax Contains: 10 pages *(including this sheet)*. If incomplete, call [Insert your direct number].

Message:

Please see the attached Re-submission of Request for Certificate of Correction for the following Patented Application:

US Patent No. 7,879,979, Issued: February 1, 2011, Arginine Analogs, and Methods for their Synthesis and Use

Sincerely,

Anavelys Ortiz-Suarez
Reg. No. 63,535

Ref: 36671-748.831 Return Original to: Terry Salvacion Location: FH/1-2

650 Page Mill Road, Palo Alto, CA 94304-1050 • 650.493.9300 Tel • 650.493.6811 Fax • www.wsgr.com

This fax may contain confidential and privileged material for the sole use of the intended recipient. Any review or distribution by others is strictly prohibited. If you are not the intended recipient please contact the sender and destroy all copies.

Entire Transmission Copyright © 2003 Wilson Sonsini Goodrich & Rosati. All Rights Reserved.

4363337_1.DOCX (660)

UNITED STATES PATENT AND TRADEMARK OFFICE

Commissioner for Patents
United States Patent and Trademark Office
P.O. Box 1450
Alexandria, VA 22313-1450
www.uspto.gov

Paper No.

Husch Blackwell LLP
Husch Blackwell Sanders LLP Welsh & Katz
120 S RIVERSIDE PLAZA
22ND FLOOR
CHICAGO IL 60606

MAILED

JUL 18 2011

OFFICE OF PETITIONS

In re Patent No. 7,926,075	:	DECISION ON REQUEST
Beaunoir et al.	:	FOR
Issue Date: April 12, 2011	:	RECONSIDERATION OF
Application No. 11/795,214	:	PATENT TERM ADJUSTMENT
Filed: July 13, 2007	:	
Attorney Docket No.7251/101877	:	
	:	

This is a decision on the petition filed on May 16, 2011, which is being treated as a petition under 37 CFR 1.705(d) requesting that the patent term adjustment indicated on the above-identified patent be corrected[1].

The petition to correct the patent term adjustment indicated on the above-identified patent is **DISMISSED**.

Receipt of the $200.00 fee set forth in 37 CFR 1.18(e) is acknowledged. No additional fees are required.

Patentees dispute the period of time excluded from B delay for appellate review. Patentees' argument has been considered, but not found persuasive. The period consumed by appellate review, whether successful or not, is excluded from the calculation of B delay. See 35 U.S.C. 154(b)(1)(B)(ii). An appeal to the Board of Patent Appeals and Interferences commences with the filing of a notice of appeal. See 35 U.S.C. 134(a). Generally, an appeal to the Board of Patent Appeals and Interferences ends with either 1) a Board decision, 2) the examiner reopening prosecution and issuing another Office action, or 3) the

[1] It is not clear from the language of the petition the exact number of days of patent term adjustment patentee believes the patent to be entitled to.

applicant filing a request to withdraw the appeal and reopen prosecution (e.g. the filing of a request for continued examination). In this instance the period consumed by appellate review is (125) days, beginning on September 8, 2010, the date of filing of the notice of appeal and ending on January 10, 2011, the subsequent date of the mailing of a notice of allowance.

Patentees argue that the time excluded should actually be treated as a period of successful appellate review. Patentees further argue that "appellate review" should be interpreted the same way under 154(b)(1)(B)(ii) and under 154(b)(1)(C)(iii). As to this argument, it is stated that the Office does not treat the filing of a notice of appeal followed by the issuance of a notice of allowance as a successful appellate review.

However, it is noted that the Office issued a Notice of proposed rulemaking entitled *Revision of Patent Term Extension and Adjustment Provisions Relating to Appellate Review and Information Disclosure Statements*, 76 FR 18990 (April 6, 2011). To the extent that the final rule on *Revision of Patent Term Extension and Adjustment Provisions Relating to Appellate Review* revises the interpretation of appellate review applied in this decision, Patentees are given **one (1) month or thirty (30) days**, whichever is longer, from the date of the final rule to file a request for reconsideration. No extensions of time will be

Nothing in this decision shall be construed as a waiver of the requirement of 35 U.S.C. 154(b)(4) that any civil action by an applicant dissatisfied with a determination made by the Director under 35 U.S.C. 154(b)(3) be filed in the United States District Court for the District of Columbia within 180 days after the grant of the patent.

Telephone inquiries specific to this matter should be directed to the undersigned at (571) 272-3219.

Nancy Johnson
Senior Petitions Attorney
Office of Petitions

UNITED STATES PATENT AND TRADEMARK OFFICE

Commissioner for Patents
United States Patent and Trademark Office
P.O. Box 1450
Alexandria, VA 22313-1450
www.uspto.gov

O'BRIEN JONES, PLLC
1951 KIDWELL DRIVE
SUITE 550 B
TYSONS CORNER VA 22182

MAILED

NOV 12 2010

OFFICE OF PETITIONS

In re Application of	:	
JOHNSON, Markus et al.	:	
Application No. 11/795,243	:	DECISION ON PETITION
Filed: May 12, 2008	:	TO WITHDRAW
Attorney Docket No. **1054.0001-00000**	:	FROM RECORD
	:	

This is a decision on the Request to Withdraw as attorney or agent of record under 37 C.F.R. § 1.36(b), filed September 17, 2010.

The request is **NOT APPROVED**.

The Office will no longer accept address changes to a new practitioner or law firm filed with a Request, absent the filing of a power of attorney to the new representative. The Office will either change the correspondence address of record to the most current address information provided for the assignee of the entire interest who properly became of record under 37 CFR 3.71 or, if no assignee of the entire interest has properly been made of record under 37 CFR 3.71, the most current address information provided for the first named inventor.

Accordingly, the request to withdraw from record cannot be approved because the request does not include an acceptable current correspondence address for future communications from the Office.

All future communications from the Office will continue to be directed to the above-listed address until otherwise notified by applicant.

Telephone inquiries concerning this decision should be directed to the undersigned at 571-272-4231.

Michelle R. Eason
Paralegal Specialist
Office of Petitions

cc: **J.A. LINDEMAN & CO. PLLC**
3190 FAIRVIEW PARK DRIVE
SUITE 480
FALLS CHURCH, VA 22042

UNITED STATES PATENT AND TRADEMARK OFFICE

Commissioner for Patents
United States Patent and Trademark Office
P.O. Box 1450
Alexandria, VA 22313-1450
www.uspto.gov

O'BRIEN JONES, PLLC
1951 Kidwell Drive
Suite 550 B
Tysons Corner VA 22182

MAILED
OCT 07 2010
OFFICE OF PETITIONS

In re Application of
Fredrik Joabsson, et al.
Application No. 11/795,249
Filed: February 28, 2008
Attorney Docket No. **1054.0002-00000**

DECISION ON PETITION
TO WITHDRAW
FROM RECORD

This is a decision on the request to withdraw as attorney of record under 37 CFR § 1.36, filed September 17, 2010.

The request is **NOT APPROVED**.

The request cannot be approved because it lacks a forwarding correspondence address of the first named inventor or a properly intervening assignee.

If the forwarding correspondence address is to the assignee, the Office will only accept correspondence address changes to the most current address information provided for the assignee of the entire interest *that properly became of record under 37 CFR 3.71.* 37 CFR 3.71(c) states:

> *An assignee becomes of record either in a national patent application or a reexamination proceeding by filing a statement in compliance with § 3.73(b) that is signed by a party who is authorized to act on behalf of the assignee.*

The assignee must establish its ownership of the patent to the satisfaction of the Director. In this regard, the statement under 37 CFR 3.73(b) must have either: (i) documentary evidence of a chain of title from the original owner to the assignee (*e.g.*, copy of an executed assignment), and a statement affirming that the documentary evidence of the chain of title from the original owner to the assignee was or concurrently is being submitted for recordation pursuant to § 3.11; or (ii) a statement specifying where documentary evidence of a chain of title from the original owner to the assignee is recorded in the assignment records of the Office (*e.g.*, reel and frame number).

All future communications from the Office will continue to be directed to the above-listed address until otherwise notified by applicant.

Telephone inquires concerning this decision should be directed to the undersigned at (571) 272-2991.

/Terri Johnson/
Terri Johnson
Petitions Examiner
Office of Petitions