UNITED STATES PATENT AND TRADEMARK OFFICE

Commissioner for Patents
United States Patent and Trademark Office
P.O. Box 1450
Alexandria, VA 22313-1450
www.uspto.gov

Constellation Law Group, PLLC
P.O. Box 220
Tracyton WA 98393

MAILED

FEB 13 2012

OFFICE OF PETITIONS

In re Application of
Jung et al.
Application No. 11/906,114
Filed: September 27, 2007
Attorney Docket No.: SE1-0208-US
Title: CONTEXT-APPROPRIATE ANSWERING RESPONSES FOR A MOBILE COMMUNICATIONS DEVICE

DECISION ON PETITION PURSUANT TO 37 C.F.R. § 1.181(A)

This is a decision on the petition filed January 30, 2012, pursuant to 37 C.F.R. § 1.181(a), requesting that the holding of abandonment in the above-identified application be withdrawn.

This petition pursuant to 37 C.F.R. § 1.181(a) is **GRANTED**.

Receipt of the concurrently submitted fees in the amount of $360 for claims in excess of 20 and $500 for independent claims in excess of three is acknowledged.

BACKGROUND

The above-identified application became abandoned for failure to reply in a timely manner to the Notice Requiring Excess Claims Fees, mailed December 16, 2010, which set a shortened statutory period for reply of one month. No response was received, and no extensions of time under the provisions of 37 C.F.R. § 1.136(a) were requested. Accordingly, the above-identified application became abandoned on January 17, 2011. A notice of abandonment was mailed September 1, 2011.

RELEVANT PORTIONS OF THE C.F.R. AND MPEP

37 C.F.R. § 1.134 sets forth, *in toto*:

> An Office action will notify the applicant of any non-statutory or shortened statutory time period set for reply to an Office action. Unless the applicant is notified in writing that a reply is required in less than six months, a maximum period of six months is allowed.

37 C.F.R. § 1.135 sets forth, *in toto*:

> (a) If an applicant of a patent application fails to reply within the time period provided under § 1.134 and § 1.136, the application will become abandoned unless an Office action indicates otherwise.
> (b) Prosecution of an application to save it from abandonment pursuant to paragraph (a) of this section must include such complete and proper reply as the condition of the application may require. The admission of, or refusal to admit, any amendment after final rejection or any amendment not responsive to the last action, or any related proceedings, will not operate to save the application from abandonment.
> (c) When reply by the applicant is a bona fide attempt to advance the application to final action, and is substantially a complete reply to the non-final Office action, but consideration of some matter or compliance with some requirement has been inadvertently omitted, applicant may be given a new time period for reply under § 1.134 to supply the omission.

Section 711.03(c)(I)(A) of the MPEP sets forth, *in toto*:

> In *Delgar v. Schulyer*, 172 USPQ 513 (D.D.C. 1971), the court decided that the Office should mail a new Notice of Allowance in view of the evidence presented in support of the contention that the applicant's representative did not receive the original Notice of Allowance. Under the reasoning of *Delgar*, an allegation that an Office action was never received may be considered in a petition to withdraw the holding of abandonment. If adequately supported, the Office may grant the petition to withdraw the holding of abandonment and remail the Office action. That is, the reasoning of Delgar is applicable regardless of whether an application is held abandoned for failure to timely pay the issue fee (35 U.S.C. 151) or for failure to prosecute (35 U.S.C. 133).
>
> To minimize costs and burdens to practitioners and the Office, the Office has modified the showing required to establish nonreceipt of an Office action. The showing required to establish nonreceipt of an Office communication must include a statement from the practitioner describing the system used for recording an Office action received at the correspondence address of record with the USPTO. The statement should establish that the docketing system is sufficiently reliable. It is expected that the record would include, but not be limited to, the application number, attorney docket number, the mail date of the Office action and the due date for the response.

Practitioner must state that the Office action was not received at the correspondence address of record, and that a search of the practitioner's record(s), including any file jacket or the equivalent, and the application contents, indicates that the Office action was not received. A copy of the record(s) used by the practitioner where the non-received Office action would have been entered had it been received is required.

A copy of the practitioner's record(s) required to show non-receipt of the Office action should include the master docket for the firm. That is, if a three month period for reply was set in the nonreceived Office action, a copy of the master docket report showing all replies docketed for a date three months from the mail date of the nonreceived Office action must be submitted as documentary proof of nonreceipt of the Office action. If no such master docket exists, the practitioner should so state and provide other evidence such as, but not limited to, the following: the application file jacket; incoming mail log; calendar; reminder system; or the individual docket record for the application in question.

The showing outlined above may not be sufficient if there are circumstances that point to a conclusion that the Office action may have been lost after receipt rather than a conclusion that the Office action was lost in the mail (e.g., if the practitioner has a history of not receiving Office actions).

Evidence of nonreceipt of an Office communication or action (e.g., Notice of Abandonment or an advisory action) other than that action to which reply was required to avoid abandonment would not warrant withdrawal of the holding of abandonment. Abandonment takes place by operation of law for failure to reply to an Office action or timely pay the issue fee, not by operation of the mailing of a Notice of Abandonment. See *Lorenz v. Finkl*, 333 F.2d 885, 889-90, 142 USPQ 26, 29-30 (CCPA 1964); *Krahn v. Commissioner*, 15 USPQ2d 1823, 1824 (E.D. Va 1990); *In re Application of Fischer*, 6 USPQ2d 1573, 1574 (Comm'r Pat. 1988).

ANALYSIS

With this petition, Petitioner has stated that the Notice Requiring Excess Claims Fees was not received at the correspondence address of record,[1] and that a search of the "records and files" indicates that the communication was not received.[2] Petitioner has further included a copy of the master docket for the relevant time period, and it is noted that the Notice Requiring Excess Claims Fees is not recorded therein. Moreover, Petitioner has established that Office communications are entered into an electronic database, due dates are

1 Petition, paragraph 3.
2 Id. at 6.

"regularly generated," and a master docket "for all attorneys" is regularly provided to Petitioner.[3]

Considering the facts and circumstances of the delay at issue, as set forth on petition, it is concluded that Petitioner has met his burden of establishing that the Notice Requiring Excess Claims Fees was not received.

Accordingly, the petition pursuant to 37 C.F.R. § 1.181(a) is **GRANTED**. The holding of abandonment is **WITHDRAWN**.

CONCLUSION

The Technology Center will be notified of this decision, and jurisdiction over this application is transferred to the Technology Center, so that the application may receive further processing. The Technology Center's support staff will notify the Examiner of this decision, so that the present application can receive further processing in due course.

Petitioner may find it beneficial to view Private PAIR within a fortnight of the present decision to ensure that the revival has been acknowledged by the Technology Center in response to this decision. It is noted that all inquiries with regard to any failure of that change in status should be directed to the Technology Center where that change of status must be effected - **the Office of Petitions cannot effectuate a change of status.**

Telephone inquiries regarding *this decision* should be directed to the undersigned at (571) 272-3225.[4] All other inquiries concerning examination procedures or status of the application should be directed to the Technology Center.

Paul Shanoski
Senior Attorney
Office of Petitions

---

3 Id. at 7.

4 Petitioner will note that all practice before the Office should be in writing, and the action of the Office will be based exclusively on the written record in the Office. See 37 C.F.R. § 1.2. As such, Petitioner is reminded that no telephone discussion may be controlling or considered authority for Petitioner's further action(s).

UNITED STATES PATENT AND TRADEMARK OFFICE

Commissioner for Patents
United States Patent and Trademark Office
P.O. Box 1450
Alexandria, VA 22313-1450
www.uspto.gov

IV - SUITER SWANTZ PC LLO
14301 FNB PARKWAY , SUITE 220
OMAHA NE 68154

MAILED
MAR 26 2012
OFFICE OF PETITIONS

In re Application of :
Roderick A. Hyde et al. :
Application No. 11/906,122 :
Filed: September 28, 2007 :
Attorney Docket No. 0107-002-001 B-O00000 :

ON PETITION

This is a decision on the petition, filed February 24, 2012, to withdraw the holding of abandonment. The petition is being treated under 37 CFR 1.181.

The petition under 37 CFR 1.181 is **GRANTED**.

This application became abandoned on November 8, 2011, for failure to file a timely response to a non-Final Office Action mailed July 5, 2011, which set a three month shortened statutory period for reply. No extensions of the time for reply under 37 CFR 1.136(a) were obtained prior to the expiration of the extendable period. Accordingly, a Notice of Abandonment was mailed February 8, 2012.

Petitioner argues however that a response was filed on November 7, 2011 with a one month extension of time.

A search of the application file and the USPTO records reveals that in fact, a response was filed on November 7, 2011 and the extension of time fee was properly posted.

Accordingly, the response was timely and the Notice of Abandonment mailed February 8, 2012 was mailed in error and is hereby withdrawn. No petition fee is due and none has been charged.

This matter is being referred to Technology Center 3769 for treatment of the response filed November 7, 2011 as appropriate.

Telephone inquiries concerning this matter may be directed to the undersigned Petitions Attorney at (571) 272-3212.

Patricia Faison-Ball

Patricia Faison-Ball
Senior Petitions Attorney
Office of Petitions

UNITED STATES PATENT AND TRADEMARK OFFICE

Commissioner for Patents
United States Patent and Trademark Office
P.O. Box 1450
Alexandria, VA 22313-1450
www.uspto.gov

MAILED
MAR 14 2012
OFFICE OF PETITIONS

Caven & Aghevli LLC
c/o CPA Global
P.O. BOX 52050
MINNEAPOLIS, MN 55402

In re Application of
Mahesh Wagh, et al.
Application No. 11/906,176
Filed: September 28, 2007
Attorney Docket No.: P26043

DECISION GRANTING PETITION
UNDER 37 CFR 1.137(b)

This is a decision on the petition, filed February 2, 2012, which is being treated as a petition under 37 CFR 1.137(b) to revive the instant nonprovisional application for failure to timely notify the U.S. Patent and Trademark (USPTO) of the filing of an application in a foreign country, or under a multinational treaty that requires publication of applications eighteen months after filing. *See* 37 CFR 1.137(f).

The petition is **GRANTED**.

Petitioner states that the instant nonprovisional application is the subject of an application filed in an eighteen-month publication country on September 23, 2008. However, the USPTO was unintentionally not notified of this filing within 45 days subsequent to the filing of the subject application in an eighteen-month publication country.

In view of the above, this application became abandoned pursuant to 35 U.S.C. § 122(b)(2)(B)(iii) and 37 CFR 1.213(c) for failure to timely notify the Office of the filing of an application in a foreign country or under a multilateral international agreement that requires publication of applications 18 months after filing.

A petition to revive an application abandoned pursuant to 35 U.S.C. 122(b)(2)(B)(iii) for failure to notify the USPTO of a foreign filing must be accompanied by:

(1) the required reply which is met by the notification of such filing in a foreign country or under a multinational treaty;
(2) the petition fee as set forth in 37 CFR 1.17(m); and
(3) a statement that the entire delay in filing the required reply from the due date of the reply until the filing of a grantable petition was unintentional.

The petition is found to be in compliance with 37 CFR 1.137(b). Accordingly, the failure to timely notify the USPTO of a foreign or international filing within 45 days after the date of filing of such

foreign or international application as provided by 35 U.S.C. § 122(b)(2)(B)(iii) and 37 CFR 1.213(c) is accepted as having been unintentionally delayed.

The previous Request and Certification under 35 U.S.C. § 122(b)(2)(B)(i) has been rescinded. A Notice Regarding Rescission of Nonpublication Request which sets forth the projected publication date of June 7, 2012 accompanies this decision on petition.

Telephone inquiries concerning this decision should be directed to the undersigned at (571) 272-3204.

This application is being referred to the Office of Data Management for further processing as a patent.

/SDB/

Sherry D. Brinkley
Petitions Examiner
Office of Petitions

ATTACHMENT: Notice Regarding Rescission of Nonpublication Request

UNITED STATES PATENT AND TRADEMARK OFFICE

UNITED STATES DEPARTMENT OF COMMERCE
United States Patent and Trademark Office
Address: COMMISSIONER FOR PATENTS
P.O. Box 1450
Alexandria, Virginia 22313-1450
www.uspto.gov

APPLICATION NUMBER	FILING OR 371(C) DATE	FIRST NAMED APPLICANT	ATTY. DOCKET NO./TITLE
11/906,176	09/28/2007	Mahesh Wagh	P26043

CONFIRMATION NO. 5367

50890
Caven & Aghevli LLC
c/o CPA Global
P.O. BOX 52050
MINNEAPOLIS, MN 55402

NONPUBLICATION RESCISSION LETTER

OC000000052779979

Date Mailed: 02/24/2012

Communication Regarding Rescission Of Nonpublication Request and/or Notice of Foreign Filing

Applicant's rescission of the previously-filed nonpublication request and/or notice of foreign filing is acknowledged. The paper has been reflected in the Patent and Trademark Office's (USPTO's) computer records so that the earliest possible projected publication date can be assigned.

The projected publication date is 06/07/2012.

If applicant rescinded the nonpublication request before or on the date of "foreign filing,"[1] then no notice of foreign filing is required.

If applicant foreign filed the application after filing the above application and before filing the rescission, and the rescission did not also include a notice of foreign filing, then a notice of foreign filing (not merely a rescission) is required to be filed within 45 days of the date of foreign filing. See 35 U.S.C. § 122(b)(2)(B)(iii), and Clarification of the United States Patent and Trademark Office's Interpretation of the Provisions of 35 U.S.C. § 122(b)(2)(B)(ii)-(iv), 1272 Off. Gaz. Pat. Office 22 (July 1, 2003).

If a notice of foreign filing is required and is not filed within 45 days of the date of foreign filing, then the application becomes abandoned pursuant to 35 U.S.C. § 122(b)(2)(B)(iii). In this situation, applicant should either file a petition to revive or notify the Office that the application is abandoned. See 37 CFR 1.137(f). Any such petition to revive will be forwarded to the Office of Petitions for a decision. Note that the filing of the petition will not operate to stay any period of reply that may be running against the application.

Questions regarding petitions to revive should be directed to the Office of Petitions at (571) 272-3282.

[1] Note, for purpose of this notice, that "foreign filing" means "filing an application directed to the same invention in another country, or under a multilateral international agreement, that requires publication of applications 18 months after filing".

/sdbrinkley/

Office of Data Management, Application Assistance Unit (571) 272-4000, or (571) 272-4200, or 1-888-786-0101

UNITED STATES PATENT AND TRADEMARK OFFICE

Commissioner for Patents
United States Patent and Trademark Office
P.O. Box 1450
Alexandria, VA 22313-1450
www.uspto.gov

MARGARET ANDERSON
106 E. 6TH STREET, SUITE 900
AUSTIN TX 78701

MAILED

MAR 16 2011

OFFICE OF PETITIONS

In re Application of	:	
Jung et al.	:	DECISION ON PETITION
Application No. 11/906,186	:	TO WITHDRAW
Filed: September 27, 2007	:	FROM RECORD
Attorney Docket No. QQ1 - 0197US	:	

This is a decision on the Request to Withdraw as attorney or agent of record under 37 C.F.R. § 1.36(b), filed January 26, 2011.

The request is **NOT APPROVED**.

The Office will only accept correspondence address changes to the most current address information provided for the assignee of the entire interest *who properly became of record under 37 CFR 3.71,* or, if no assignee of the entire interest has properly been made of record, the most current address information provided for the first named inventor. 37 CFR 3.71(c) states:

> ***An assignee becomes of record either in a national patent application or a reexamination proceeding by filing a statement in compliance with § 3.73(b) that is signed by a party who is authorized to act on behalf of the assignee.***

According to a review of current USPTO records petitioner has not requested the address be changed to a properly recorded assignee or the first listed inventor. The Customer Number 55922 is neither the first named inventor nor the assignee who properly became of record under 37 CFR 3.71 As such, all future communications from the Office will continue to be directed to the above-listed address until otherwise notified by applicant.

Further, the address given on the petition differs from the address of record. A courtesy copy of this decision is being mailed to the address given on the petition; however, the Office will mail all future correspondence solely to the address of record.

Currently, there is an outstanding Office action mailed February 25, 2011 that requires a reply.

Telephone inquires concerning this decision should be directed to the undersigned at (571) 272-7751.

Joan Olszewski
Petitions Examiner
Office of Petitions

cc: LEE & HAYES, PLLC
601 W RIVERSIDE
SUITE 1400
SPOKANE, WA 99201

UNITED STATES PATENT AND TRADEMARK OFFICE

Commissioner for Patents
United States Patent and Trademark Office
P.O. Box 1450
Alexandria, VA 22313-1450
www.uspto.gov

DENTSPLY INTERNATIONAL INC
570 WEST COLLEGE AVENUE
YORK, PA 17404

MAILED
DEC 16 2010
OFFICE OF PETITIONS

In re Application of :
Benjamin Jiemin Sun, et al. :
Application No. 11/906,244 : ON PETITION
Filed: October 1, 2007 :
Attorney Docket No.: PRO-CR2237A :

This is a decision on the petition, filed October 20, 2010, to revive the above-identified application under the provisions of 37 CFR 1.137(b).

The petition is not signed by a registered patent attorney or patent agent of record. However, in accordance with 37 CFR 1.34, the signature of Mr. Douglas J. Hura appearing on the correspondence shall constitute a representation to the United States Patent and Trademark Office that he is authorized to represent the particular party on whose behalf he acts.

The petition is **GRANTED**.

The application became abandoned for failure to timely respond to a Notice to File Missing Parts (Notice) mailed February 26, 2009. The Notice set a period for reply of two (2) months and required the an oath or declaration under 37 CFR 1.63, the requisite surcharge under 37 CFR 1.16(f) and a replacement abstract commencing on a separate sheet in compliance with 37 CFR 1.72(b) and 37 CFR 1.121. No extension of time under the provisions of 37 CFR 1.136(a) was obtained. Accordingly, the application became abandoned on April 27, 2009. A Notice of Abandonment was mailed on October 20, 2009.

The petition satisfies the requirements of 37 CFR 1.137(b) in that petitioner has supplied (1) the reply in the form of an abstract, surcharge and a declaration under 37 CFR 1.63; (2) the petition fee of $1,620; and (3) an adequate statement of unintentional delay.

The application is being referred to the Office of Patent Application Processing (OPAP) for further processing using the response filed October 20, 2010.

Telephone inquires related to this decision should be directed to the undersigned at (571) 272-3204. Telephone inquiries related to processing at OPAP should be directed to their hotline at (571) 272-4000.

Sherry D. Brinkley
Petitions Examiner
Office of Petitions

UNITED STATES PATENT AND TRADEMARK OFFICE

UNITED STATES DEPARTMENT OF COMMERCE
United States Patent and Trademark Office
Address: COMMISSIONER FOR PATENTS
P.O. Box 1450
Alexandria, Virginia 22313-1450
www.uspto.gov

APPLICATION NO.	FILING DATE	FIRST NAMED INVENTOR	ATTORNEY DOCKET NO.	CONFIRMATION NO.
11/906,248	10/01/2007	Hyerim Lee	10338 CNT	6411

7590 03/11/2011
LOUIS J. WILLE
BRISTOL-MYERS SQUIBB COMPANY
PATENT DEPARTMENT
P O BOX 4000
PRINCETON, NJ 08543-4000

EXAMINER
GODDARD, LAURA B

ART UNIT	PAPER NUMBER
1642	

NOTIFICATION DATE	DELIVERY MODE
03/11/2011	ELECTRONIC

ACKNOWLEDGEMENT OF REQUEST

Notice of Allowance/Allowability Mailed

The request to print a color drawing reference as the first paragraph in the portion of the specification containing a brief description of the drawings as required by 37 CFR 1.84 and MPEP § 608.02 has been received by the United States Patent and Trademark Office and will be entered into the specification.

571-272-4200 or 1-888-786-0101
Application Assistance Unit
Office of Data Management

FORM PTOM327-5 (Rev. 02/08)

UNITED STATES PATENT AND TRADEMARK OFFICE

Commissioner for Patents
United States Patent and Trademark Office
P.O. Box 1450
Alexandria, VA 22313-1450
www.uspto.gov

March 9, 2011

LOUIS J. WILLE
BRISTOL-MYERS SQUIBB COMPANY
PATENT DEPARTMENT
P O BOX 4000
PRINCETON NJ 08543-4000

In re Application of	:	
Lee, Hyerim, et al	:	**DECISION ON PETITION**
Application No. 11/906,248	:	
Filed: 10/01/2007	:	***ACCEPTANCE OF COLOR***
Attorney Docket No. 10338 CNT	:	***DRAWINGS***

This is a decision on the Petition to Accept Color Drawings under 37 C.F.R 1.84 (a) (2), received in the United States Patent and Trademark Office (USPTO) October 1, 2007.

The petition is **GRANTED**.

A grantable petition under 37 C.F.R. 1.84(a) (2) must be accompanied by the following.

1. The fee set forth under 37 C.F.R. 1.17(h),
2. Three (3) sets of the color drawings in question, or (1) set if filed via EFS, and
3. The specification contains appropriate language referring to the color drawings as the first paragraph in that portion of the specification relating to the brief description of the drawings.

The petition was accompanied by all of the required fees and drawings. The specification contains the appropriate language. Therefore, the petition is GRANTED.

Telephone inquires relating to this decision may be directed to the undersigned in the Office of Data Management at 571-272-4200.

/Diane Terry/
Quality Control Specialist
Office of Data Management
Publications Branch

UNITED STATES PATENT AND TRADEMARK OFFICE

COMMISSIONER FOR PATENTS
UNITED STATES PATENT AND TRADEMARK OFFICE
P.O. BOX 1450
ALEXANDRIA, VA 22313-1450
www.uspto.gov

PATENTS AND LICENSING LLC
DANIEL W. JUFFERNBRUCH
28 BARRINGTON BOURNE
BARRINGTON IL 60010-9605

MAILED
JUN 17 2011
OFFICE OF PETITIONS

In re Application of :
Ghadaksaz : DECISION ON PETITION
Application No. 11/906,288 :
Filed: September 29, 2007 :
Atty. Dkt. No.: PL069-0001 :

This is a decision on the "PETITION ADDENDUM", filed June 9, 2011. This matter is being properly treated under 37 CFR 1.137(b) as a petition to revive. It is noted that form PTO/SB/64 submitted herewith has not been considered insofar as the petition under 37 CFR 1.137(b) is concerned as the form is not signed within the meaning of 37 CFR 1.33(b).

The petition is **GRANTED**.

This application became abandoned May 8, 2011 for failure to timely reply to the Notice of Allowance (Notice) mailed February 7, 2011. The Notice set a three (3) month statutory period of time for reply. Notice of Abandonment was mailed May 23, 2011.

A grantable petition under 37 CFR 1.137(b) must be accompanied by: (1) the required reply; (2) the petition fee as set forth in 37 CFR 1.17(m); (3) a statement that the entire delay in filing the required reply from the due date for the reply until the filing of a grantable petition pursuant to 37 CFR 1.137(b) was unintentional; and (4) any terminal disclaimer (and fee as set forth in 37 CFR 1.20(d)) required by 37 CFR 1.137(d). Where there is a question as to whether either the abandonment or the delay in filing a petition under 37 CFR 1.137 was unintentional, the Director may require additional information. See MPEP 711.03(c)(II)(C) and (D).

As to item (3), 37 CFR 1.137(b)(3) requires a statement that "the entire delay in filing the required reply from the due date for the reply until the filing of a grantable petition pursuant to 37 CFR 1.137(b) was unintentional." Since the statement appearing in the petition varies from the language required by 37 CFR 1.137(b)(3), the statement is being construed as the required statement. Petitioner must notify the Office if this is **not** a correct reading of the statement appearing in the petition.

The instant petition has been carefully reviewed and found in compliance with the requirements set forth above.

In view thereof, this application is being forwarded to the Office of Data Management for further processing.

Telephone inquiries concerning this matter may be directed to the undersigned at (571) 272-3205.

/ALESIA M. BROWN/

Alesia M. Brown
Attorney Advisor
Office of Petitions

UNITED STATES PATENT AND TRADEMARK OFFICE

Commissioner for Patents
United States Patent and Trademark Office
P.O. Box 1450
Alexandria, VA 22313-1450
www.uspto.gov

Jurgen Vollrath
588 Sutter Street # 531
San Francisco CA 94102

MAILED

MAR 28 2011

OFFICE OF PETITIONS

In re Application of :
Vladislav Vashchenko, et al. :
Application No. 11/906,358 : DECISION ON PETITION
Filed: October 2, 2007 :
Attorney Docket No. **P06391** :

This is a decision on the petition under the unintentional provisions of 37 CFR 1.137(b), filed February 15, 2011, to revive the above-identified application.

The petition is **GRANTED**.

This application became abandoned for failure to timely pay the issue fee on or before January 5, 2011, as required by the Notice of Allowance and Fee(s) Due, mailed October 5, 2010. Accordingly, the date of abandonment of this application is January 6, 2011.

The petition satisfies the requirements of 37 CFR 1.137(b) in that petitioner has supplied (1) the reply in the form of payment of the issue fee of $1,510, (2) the petition fee of $1,620; and (3) a proper statement of unintentional delay.

37 CFR 1.137(b)(3) requires a statement that "the entire delay in filing the required reply from the due date for the reply until the filing of a grantable petition pursuant to 37 CFR 1.137(b) was unintentional." Since the statement appearing in the petition varies from the language required by 37 CFR 1.137(b)(3), the statement is being construed as the required statement. Petitioner must notify the Office if this is **not** a correct reading of the statement appearing in the petition.

Telephone inquiries concerning this decision should be directed to JoAnne Burke at (571) 272-4584.

This application is being referred to the Office of Data Management for processing into a patent.

JoAnne Burke
Petitions Examiner
Office of Petitions

UNITED STATES PATENT AND TRADEMARK OFFICE

Commissioner for Patents
United States Patent and Trademark Office
P.O. Box 1450
Alexandria, VA 22313-1450
www.uspto.gov

JAMES A HUDAK ESQ
SUITE #304
29425 CHAGRIN BLVD
CLEVELAND OH 44122

MAILED
JAN 30 2012
OFFICE OF PETITIONS

In re Application of Michael P. Smith Application No. 11/906,362 Filed: October 3, 2007 Title: Method of Molding an Endotracheal Tube for Tracheal Intubation	: : : : :	ON PETITION

This is in response to petition to revive under 37 CFR 1.137(b), filed January 4, 2012.

The petition under 37 CFR 1.137(b) is **GRANTED**.

The above-identified application became abandoned for failure to timely file a proper reply to the final Office action mailed March 14, 2011. Applicant filed an Amendment on September 19, 2011, made timely by obtaining a three month extension of time and including a Certificate of Mailing dated September 14, 2011. However, in an Advisory Action mailed on October 4, 2011, the Examiner informed Applicant that the Amendment would not be entered because it failed to place the application in condition for allowance. As such, the application became abandoned on September 15, 2011. The Office mailed a Notice of Abandonment on October 31, 2011.

With the instant petition, petitioner paid the petition fee, made the proper statement of unintentional delay, and submitted the required reply in the form of an RCE.

The application is being forwarded to Group Art Unit 1743 for consideration of the RCE, filed January 4, 2012.

Telephone inquiries concerning this decision may be directed to the undersigned at 571-272-3207.

Cliff Congo
Petitions Attorney
Office of Petitions

UNITED STATES PATENT AND TRADEMARK OFFICE

Commissioner for Patents
United States Patent and Trademark Office
P.O. Box 1450
Alexandria, VA 22313-1450
www.uspto.gov

THE WATSON INTELLECTUAL PROPERTY GROUP, PLC
3133 HIGHLAND DRIVE
SUITE 200
HUDSONVILLE MI 49426

MAILED

AUG 23 2010

OFFICE OF PETITIONS

In re Application of	:	
Waymon P. Goch	:	
Application No. 11/906,387	:	DECISION ON PETITION
Filed: October 2, 2007	:	
Attorney Docket No. **ETI-061618**	:	

This is a decision on the petition, filed May 10, 2010, which is being treated as a petition under 37 CFR 1.8(a), requesting withdrawal of the holding of abandonment in the above-identified application.

The petition is **GRANTED**.

This application was held abandoned for failure to timely respond to the Office action of April 6, 2009, which set a three (3) month shortened statutory period for reply. A reply was due on or before July 6, 2009, or on or before October 6, 2009 with a three month extension of time. The Office mailed a Notice of Abandonment on November 13, 2009.

Petitioner states that a timely reply was mailed via certificate of mailing on October 2, 2009, which included the following papers: an amendment and authorization to charge extension of time fee. The papers were received at the USPTO on November 9, 2009 along with a certificate of mailing dated October 2, 2009. The reply to the Office action was therefore timely filed.

Failure to timely receive correspondence which includes a certificate of mailing or certificate of facsimile transmission is addressed in 37 CFR 1.8(a), reproduced below:

Except in the situations enumerated in paragraph (a)(2) of this section or as otherwise expressly excluded in this chapter, correspondence required to be filed in the U.S. Patent and Trademark Office within a set period of time will be considered as being timely filed if the procedure described in this section is followed. The actual date of receipt will be used for all other purposes.

(1) Correspondence will be considered as being timely filed if:

(i) The correspondence is mailed or transmitted prior to expiration of the set period of time by being:

(A) Addressed as set out in § 1.1(a) and deposited with the U.S. Postal Service with sufficient postage as first class mail;

(B) Transmitted by facsimile to the Patent and Trademark Office in accordance with § 1.6 (d); or

(C) Transmitted via the Office electronic filing system in accordance with § 1.6(a)(4); and

(ii) The correspondence includes a certificate for each piece of correspondence stating the date of deposit or transmission. The person signing the certificate should have reasonable basis to expect that the correspondence would be mailed or transmitted on or before the date indicated.

The petition satisfies the above requirements of 37 CFR 1.8(a). Accordingly, the holding of abandonment for failure to timely file a reply to the Office action of April 6, 2009 is hereby withdrawn and the application restored to pending status.

Telephone inquiries regarding this decision should be directed to Terri Johnson at (571) 272-2991.

This application is being referred to Technology Center AU 2831 for appropriate action in the normal course of business on the reply received November 9, 2009.

Ramesh Krishnamurthy

Ramesh Krishnamurthy
Petitions Examiner
Office of Petitions

UNITED STATES PATENT AND TRADEMARK OFFICE

Commissioner for Patents
United States Patent and Trademark Office
P.O. Box 1450
Alexandria, VA 22313-1450
www.uspto.gov

MAILED

SEP 20 2010

OFFICE OF PETITIONS

Patent Services
915 Merchant Walk
Suite D
Huntsville, AL 35801

In re Application of	:	
Ronald L. Barnes	:	
Application No. 11/906,403	:	ON PETITION
Filed: October 2, 2007	:	
Attorney Docket No. 08-0116.02	:	

This is a decision on the petition under 37 CFR 1.137(b), filed August 2, 2010, to revive the above-identified application.

The application became abandoned for failure to file a reply to the non-final Office action mailed on October 31, 2008. A Notice of Abandonment was mailed on May 13, 2009.

The petition satisfies the requirements of 37 CFR 1.137(b) in that petitioner has supplied (1) the reply in the form of an amendment; (2) the petition fee of $810; and (3) a proper statement of unintentional delay. Therefore, the petition is **GRANTED**.

This application file is being referred to Technology Center Art Unit 1797 for review of the amendment filed with the present petition.

Telephone inquiries concerning this decision should be directed to the undersigned at (571) 272-3226.

Andrea Smith
Petitions Examiner
Office of Petitions

UNITED STATES PATENT AND TRADEMARK OFFICE

Commissioner for Patents
United States Patent and Trademark Office
P.O. Box 1450
Alexandria, VA 22313-1450
www.uspto.gov

MAILED
AUG 22 2011
OFFICE OF PETITIONS

CISLO & THOMAS LLP
1333 2ND STREET
SUITE #500
SANTA MONICA CA 90401-4110

In re Application of	:	
George Dewberry	:	
Application No. 11/906,435	:	ON PETITION
Filed: October 2, 2007	:	
Attorney Docket No. 07-19604	:	

This is a decision on the petition to revive under 37 CFR 1.137(b), filed August 4, 2011.

The petition under 37 CFR 1.137(b) is **GRANTED**.

The above-identified application became abandoned for failure to timely file a reply to the non-final Office action mailed January 22, 2010. The Office action set a shortened statutory period for reply of three months. No reply having been received, the application became abandoned on April 23, 2010. The Office mailed a Notice of Abandonment on August 4, 2010.

With the instant petition, applicant paid the petition fee, made the proper statement of unintentional delay, and submitted the required reply in the form of continuation application No. 13/198,284.

The above-identified application is being revived solely for purposes of continuity. As continuity has been established by this decision reviving the above-identified application, the above identified application is again abandoned in favor of the continuation application, No. 13/198,284, filed August 4, 2011.

Telephone inquiries concerning this decision should be directed to the undersigned at (571)272-3207.

Cliff Congo
Petitions Attorney
Office of Petitions

UNITED STATES PATENT AND TRADEMARK OFFICE

Commissioner for Patents
United States Patent and Trademark Office
P.O. Box 1450
Alexandria, VA 22313-1450
www.uspto.gov

Wayne Bonin
21 Black Oak Road
North Oaks MN 55127

MAILED

SEP 30 2010

OFFICE OF PETITIONS

In re Application of	:	
Wayne Allen Bonin	:	
Application No. 11/906,444	:	DECISION ON PETITION
Filed: October 1, 2007	:	
Attorney Docket No. XDUCER-ML03	:	

This is a decision on the petition under the unintentional provisions of 37 CFR 1.137(b), filed August 13, 2010, to revive the above-identified application.

The petition is **GRANTED**.

This application became abandoned for failure to timely pay the issue and publication fees on or before August 4, 2010, as required by the Notice of Allowance and Fee(s) Due, mailed May 4, 2010. Accordingly, the date of abandonment of this application is August 5, 2010. A Notice of Abandonment was mailed on August 25, 2010.

The petition satisfies the requirements of 37 CFR 1.137(b) in that petitioner has supplied (1) the reply in the form of payment of the issue fee of $755, (2) the petition fee of $810, and (3) a proper statement of unintentional delay. Accordingly, the issue and publication fees are accepted as being unintentionally delayed.

Telephone inquiries concerning this decision should be directed to Kimberly Inabinet at (571) 272-4618.

This application is being referred to Technology Center 2831 for further processing of the amendment received August 13, 2010.

/Kimberly A. Inabinet/

Kimberly A. Inabinet
Petitions Examiner
Office of Petitions

UNITED STATES PATENT AND TRADEMARK OFFICE

COMMISSIONER FOR PATENTS
UNITED STATES PATENT AND TRADEMARK OFFICE
P.O. BOX 1450
ALEXANDRIA, VA 22313-1450
www.uspto.gov

MAILED
AUG 12 2010
OFFICE OF PETITIONS

BLAKELY SOKOLOFF TAYLOR & ZAFMAN LLP
1279 OAKMEAD PARKWAY
SUNNYVALE CA 94085-4040

In re Application of	:	
Duffy et al.	:	DECISION ON PETITION
Application No. 11/906,453	:	
Filed: 10/01/2007	:	
Attorney Docket No. 20820P091C2	:	

This is a decision on the petition under 37 CFR 1.137(b), filed March 23, 2010, to revive the above-identified application.

The petition is **GRANTED**.

This application became abandoned for failure to pay the issue and publication fees as required by the Notice of Allowance and Fee(s) Due mailed on December 21, 2009, which set a three (3) month statutory period for reply. Accordingly, the application became abandoned on March 22, 2010. A Notice of Abandonment was mailed on April 5, 2010.

The petition satisfies the requirements of 37 CFR 1.137(b) in that petitioner has supplied (1) the reply in the form of payment of the issue fee and publication fee, (2) the petition fee, and (3) a proper statement of unintentional delay.

This matter is being forwarded to the Office of Data Management for processing into a patent.

Telephone inquiries specifically concerning this decision should be directed to the undersigned at (571) 272-3211.

C. T. Donnell

Christina Tartera Donnell
Senior Petitions Attorney
Office of Petitions

UNITED STATES PATENT AND TRADEMARK OFFICE

COMMISSIONER FOR PATENTS
UNITED STATES PATENT AND TRADEMARK OFFICE
P.O. BOX 1450
ALEXANDRIA, VA 22313-1450
www.uspto.gov

Paper No.

HONEYWELL/PERKOWSKI
Patent Services
101 Columbla Road
P.O.Box 2245
Morristown NJ 07962

MAILED
JAN 26 2011
OFFICE OF PETITIONS

In re Application of :
Good et al. : ON PETITION
Application No. 11/906,536 :
Filed: October 2, 2007 :
Attorney Docket No. H28654 :

This is in response to the PETITION FOR REVIVAL OF AN APPLICATION FOR PATENT ABANDONED UNINTENTIONALLY UNDER 37 CFR 1.137(b) filed December 17, 2010.

The petition is **GRANTED**.

The above-identified application became abandoned for failure to pay the Issue Fee and Publication Fee within three months of the mailing date, November 18, 2009, of the Notice of Allowance and Fee(s) Due. This Office action set a three-month nonextendable statutory period for reply. A courtesy Notice of Abandonment was mailed on March 8, 2010.

The petition included the required reply[1] in the form of payment of the Issue Fee and Publication Fee; payment of the petition fee set forth in 37 CFR § 1.17(m); and the required statement of unintentional delay. No terminal disclaimer is required.

It is concluded that all requirements of 37 CFR 1.137(b) have been met.

The application is being forwarded to Technology Center AU 2887 for consideration by the examiner of the amendment under 1.312 filed December 17, 2010. Thereafter, the application will be

[1] There was no distinct but concurrent requirement for new drawings.

forwarded to the Office of Data Management for processing into a patent.

Telephone inquiries related to this decision should be directed to the undersigned at (571) 272-3219.

Nancy Johnson
Senior Petitions Attorney
Office of Petitions

UNITED STATES PATENT AND TRADEMARK OFFICE

Commissioner for Patents
United States Patent and Trademark Office
P.O. Box 1450
Alexandria, VA 22313-1450
www.uspto.gov

Paper No.

LUMEN PATENT FIRM
350 Cambridge Avenue
Suite 100
PALO ALTO CA 94306

MAILED
SEP 12 2011
OFFICE OF PETITIONS

In re Application of	:	
Chen et al.	:	DECISION ON PETITION
Application No. 11/906,547	:	
Filed: October 1, 2007	:	
Atty Docket No. VSE-102/US	:	

This is a decision on the PETITION FOR REVIVAL OF AN APPLICATION FOR PATENT ABANDONED UNINTENTIONALLY UNDER 37 CFR 1.137(b) filed April 21, 2011.

The petition is **GRANTED**.

On July 8, 2010, a non-final Office action was mailed in the above-identified application. This Office action set a shortened statutory period for reply of three (3) months, with extensions of time obtainable under § 1.136(a). No reply was filed and no extension of time was obtained. Accordingly, the application became abandoned effective October 9, 2010. A courtesy Notice of Abandonment was mailed on January 24, 2011.

The petition includes the required reply in the form of an amendment, the required statement of unintentional delay, and payment of the petition fee set forth in 37 CFR § 1.17(m). No terminal disclaimer is required.

All requirements of 37 CFR 1.137(b) have been met.

An extension of time under 37 CFR 1.136 must be filed prior to the expiration of the maximum extendable period for reply. See In re Application of S., 8 USPQ2d 1630, 1631 (Comm'r Pats.

1988). Since the $555 extension of time fee submitted with the petition on April 21, 2011 was submitted subsequent to the maximum extendable period for reply, this fee is unnecessary and is being refunded.

Technology Center AU 2172 has been advised of this decision. The application is, thereby, forwarded to the examiner for consideration of the reply submitted on April 21, 2011.

Telephone inquiries specific to this decision should be directed to the undersigned at (571) 272-3219.

Nancy Johnson
Senior Petitions Attorney
Office of Petitions

UNITED STATES PATENT AND TRADEMARK OFFICE

Commissioner for Patents
United States Patent and Trademark Office
P.O. Box 1450
Alexandria, VA 22313-1450
www.uspto.gov

In re Patent No. 7,966,720	:	
Issue Date: 28 June 2011	:	
Serial No.: 11/906,550	:	DECISION ON PETITION
Filed: 02 October 2007	:	UNDER 37 CFR 1.324
For: TOSHIHIKO		:

This is a decision on the petition filed 19 January 2012, to correct the inventorship under 37 CFR 1.324.

The petition is Granted.

The patented file is being forwarded to the Certificate of Corrections Branch for issuance of a certificate naming only the actual inventor or inventors.

PETITION GRANTED.

/Derris H Banks/
Supervisory Patent Examiner, Art Unit 3729

HARNESS, DICKEY & PIERCE, P.L.C.
P.O. BOX 828
BLOOMFIELD HILLS MI 48303

UNITED STATES PATENT AND TRADEMARK OFFICE

Commissioner for Patents
United States Patent and Trademark Office
P.O. Box 1450
Alexandria, VA 22313-1450
www.uspto.gov

July 26, 2011

Bryan Cave LLP
1290 Avenue of the Americas
New York NY 10104

In re Application of	:	
Rong Li et al.	:	**DECISION ON PETITION**
Application No. 11906600	:	
Filed: 10/02/2007	:	***ACCEPTANCE OF COLOR***
Attorney Docket No. **C065272/0214039**	:	***DRAWINGS***

This is a decision on the Petition to Accept Color Drawings under 37 C.F.R 1.84 (a) (2), received in the United States Patent and Trademark Office (USPTO) October 2, 2007.

The petition is **GRANTED**.

A grantable petition under 37 C.F.R. 1.84(a) (2) must be accompanied by the following.

1. The fee set forth under 37 C.F.R. 1.17(h),
2. Three (3) sets of the color drawings in question, or (1) set if filed via EFS, and
3. The specification contains appropriate language referring to the color drawings as the first paragraph in that portion of the specification relating to the brief description of the drawings.

The petition was accompanied by all of the required fees and drawings. The specification contains the appropriate language. Therefore, the petition is GRANTED.

Telephone inquires relating to this decision may be directed to the undersigned in the Office of Data Management at 571-272-4200.

/Laura Feldman/
Quality Control Specialist
Office of Data Management
Publications Branch

UNITED STATES PATENT AND TRADEMARK OFFICE

Commissioner for Patents
United States Patent and Trademark Office
P.O. Box 1450
Alexandria, VA 22313-1450
www.uspto.gov

THE WEBOSTAD FIRM, A PROFESSIONAL CORPORATION
150 NORTH WIGET LANE
SUITE 200
WALNUT CREEK CA 94598

MAILED

AUG 20 2010

OFFICE OF PETITIONS

In re Application of	:	
Horch et al.	:	
Application No. 11/906,619	:	DECISION ON PETITION
Filed: October 3, 2007	:	
Attorney Docket No. 2000.006.02/US	:	

This is a decision on the petition under the unintentional provisions of 37 CFR 1.137(b), filed July 7, 2010, to revive the above-identified application.

The petition is **GRANTED**.

This application became abandoned for failure to timely pay the issue fee on or before January 11, 2010, as required by the Notice of Allowance and Fee(s) Due mailed October 9, 2009. Accordingly, the date of abandonment of this application is January 12, 2010. A Notice of Abandonment was mailed January 28, 2010.

The petition satisfies the requirements of 37 CFR 1.137(b) in that petitioner has supplied (1) the reply in the form of payment of the issue fee of $1,510.00; (2) the petition fee of $1,620.00; and (3) a proper statement of unintentional delay.

Further, it is not apparent whether the statement of unintentional delay was signed by a person who would have been in a position of knowing that the **entire** delay in filing the required reply from the due date for the reply until the filing of a grantable petition pursuant to 37 CFR 1.137(b) was unintentional. Nevertheless, in accordance with 37 CFR 10.18, the statement is accepted as constituting a certification of unintentional delay. However, in the event that petitioner has no knowledge that the delay was unintentional, petitioner must make such an inquiry to ascertain that, in fact, the delay was unintentional. If petitioner discovers that the delay was intentional, petitioner must notify the Office.

Telephone inquiries concerning this decision should be directed to the undersigned at (571) 272-7751.

This application is being referred to the Office of Data Management for processing into a patent.

Joan Olszewski
Petitions Examiner
Office of Petitions

Doc Code: PET.AUTO **Document Description: Petition automatically granted by EFS-Web**	PTO/SB/83 U.S. Patent and Trademark Office Department of Commerce

Electronic Petition Request	**REQUEST FOR WITHDRAWAL AS ATTORNEY OR AGENT AND CHANGE OF CORRESPONDENCE ADDRESS**
Application Number	11906649
Filing Date	03-Oct-2007
First Named Inventor	Janay Jones
Art Unit	3782
Examiner Name	ADAM WAGGENSPACK
Attorney Docket Number	JAJO-0003
Title	Folding carrying pack apparatus and method

◉ Please withdraw me as attorney or agent for the above identified patent application and the practitioners of record associated with Customer Number: 30184

The reason(s) for this request are those described in 37 CFR:

10.40(c)(1)(iv)

10.40(c)(1)(vi)

Certifications

☒ I/We have given reasonable notice to the client, prior to the expiration of the response period, that the practitioner(s) intend to withdraw from employment

☒ I/We have delivered to the client or a duly authorized representative of the client all papers and property (including funds) to which the client is entitled

☒ I/We have notified the client of any responses that may be due and the time frame within which the client must respond

Change the correspondence address and direct all future correspondence to the first named inventor or assignee that has properly made itself of record pursuant to 37 CFR 3.71:

Name	Janay S. Jones c/o JPAC, Inc.
Address	5543 Edmondson Pike Suite 72
City	Nashville
State	TN
Postal Code	37211-5808

Country	US
I am authorized to sign on behalf of myself and all withdrawing practitioners.	
Signature	/Barry E. Kaplan/
Name	Barry E. Kaplan
Registration Number	38934

UNITED STATES PATENT AND TRADEMARK OFFICE

Commissioner for Patents
United States Patent and Trademark Office
P.O. Box 1450
Alexandria, VA 22313-1450
www.uspto.gov

Decision Date : November 14,2011

In re Application of :

Janay Jones

Application No : 11906649

Filed : 03-Oct-2007

Attorney Docket No : JAJO-0003

DECISION ON REQUEST TO WITHDRAW AS ATTORNEY/AGENTOF RECORD

This is an electronic decision on the Request to Withdraw as attorney or agent of record under 37 CFR § 1.36(b), filed November 14,2011

The request is **APPROVED.**

The request was signed by Barry E. Kaplan (registration no. 38934) on behalf of all attorneys/agents associated with Customer Number 30184 . All attorneys/agents associated with Cusotmer Number 30184 have been withdrawn.

Since there are no remaining attorneys of record, all future communications from the Office will be directed to the first named inventor or assignee that has properly made itself of record pursuant to 37 CFR 3.71, with correspondence address:

Name	Janay S. Jones
Name2	c/o JPAC, Inc.
Address 1	5543 Edmondson Pike
Address 2	Suite 72
City	Nashville
State	TN
Postal Code	37211-5808
Country	US

As a reminder, requester is required to inform the first named inventor or assignee that has properly made itself of record pursuant to 37 CFR 3.71 of the electronically processed petition.

Telephone inquiries concerning this decision should be directed to the Patent Electronic Business Center (EBC) at 866-217-9197.

Office of Petitions

UNITED STATES PATENT AND TRADEMARK OFFICE

Commissioner for Patents
United States Patent and Trademark Office
P.O. Box 1450
Alexandria, VA 22313-1450
www.uspto.gov

BROOKS, CAMERON & HUEBSCH, PLLC
1221 NICOLLET AVENUE
SUITE 500
MINNEAPOLIS MN 55403

MAILED
FEB 21 2012
OFFICE OF PETITIONS

In re Application of:
PINCHUK ET AL.
Serial No.: 11/906,703
Filed: October 3, 2007
Attorney Docket No.: 93-P0241US12
Title: **EXPANDABLE SUPPORTIVE BRANCHED ENDOLUMINAL GRAFTS**

DECISION ON PETITION

This is a decision on the petition filed July 14, 2011, which is being treated as a petition under 37 CFR 1.182 requesting that the application be treated as a divisional reissue under 35 USC 251. The $400.00 petition fee has been received.

The petition is **DISMISSED**.

Any request for reconsideration of this decision must be submitted within TWO (2) MONTHS from the mail date of this decision. Extensions of time under 37 CFR 1.136(a) are permitted. The reconsideration request should include a cover letter entitled "Renewed Petition under 37 CFR 1.182." This is **not** a final agency action within the meaning of 5 U.S.C. § 704.

In response to a Miscellaneous Communication from the examiner dated June 16, 2011, petitioner filed this petition requesting that the examiner treat this application as a divisional reissue under 35 USC 251. In the Miscellaneous Communication, the examiner requested clarification of whether the application should be considered a divisional under 35 USC 111 of reissue application 09/657,041 (i.e., a Bauman-type divisional application) or a reissue divisional of reissue application number 09/657,041.

Petitioner states that there are at least five areas of record that support the designation of the present application as a divisional reissue; (1) a Supplemental Reissue Application Declaration filed on October 3, 2007 with the original filing, (2) an amendment to the specification which identifies this application as a "divisional application of application Ser. No. 09/657,041," (3) the filing receipt which identifies the application as a "DIV of 09/657,041, 09/05/2000," (4) The Response to Notice of Incomplete Non-Provisional Application dated September 18, 2008 which

states, "The present divisional reissue application was filed on October 3, 2007 with a full copy of printed U.S. Patent No. 5,855,598... ," and (5) the original presentation of claims in the present case started with claim numbering showing claims 1-42 as cancelled and claims 43-59 as pending.

As noted in MPEP 1451, the mere fact that the application purports to be a continuation or divisional of a parent reissue application does not make it a reissue application itself, since it is possible to file a 35 U.S.C. 111(a) continuing application of a reissue application. In re Bauman, 683 F.2d 405, 214 USPQ 585 (CCPA 1982). There must be an identification, on filing, that the application is a continuation reissue application, as opposed to a continuation of a reissue application (i.e., a Bauman type continuation application). Likewise, there must be an identification, on filing, that the application is a divisional reissue application, as opposed to a divisional of a reissue application. Thus, the specification must be amended to state that the application is a "continuation reissue application" or "divisional reissue application" of its parent reissue application. If the specification is amended to state that the application is a "continuation" or "divisional" of its parent reissue application, the application may very well be treated as a Bauman type continuation or divisional application.

A review of the record indicates that there was identification on filing that the application is a divisional reissue. As noted above, on filing the application there are two areas of record that support the designation of the present application as a divisional reissue; (1) a Supplemental Reissue Application Declaration filed on October 3, 2007 and (2) the petition for Filing Date in Response to Notice of Incomplete Non-Provisional Application dated September 18, 2008 which states, "The above identified divisional reissue application was filed on October 3, 2007 with a full copy of printed U.S. Patent No. 5,855,598... ."

Further, in accordance with MPEP 1451, applicant has amended the specification to state that this application is a "divisional reissue of U.S. Pat. No. 5,955,598" The specification has also been amended to provide notice stating that more than one reissue application has been filed and identifying each of the reissue applications and their relationship within the family of reissue applications, and to the original patent.

37 CFR 1.182 states that:

> All situations not specifically provided for in the regulations of this part will be decided in accordance with the merits of each situation by or under the authority of the Director, subject to such other requirements as may be imposed, and such decision will be communicated to the interested parties in writing. Any petition seeking a decision under this section must be accompanied by the petition fee set forth in § 1.17(f).

Accordingly, the petition is dismissed. Before the petition can be granted, applicant is required to pay the required fees for a reissue application.

The filing, examination and search fees for a reissue application are different than the fees paid on October 3, 2007 and December 3, 2007 for a regular utility application. In this instance, the

fee required by law is $2000.00. Petitioner must submit the $760.00 fee deficiency as the petition did not include an authorization to pay.

Further correspondence with respect to this matter should be addressed as follows:

By mail: Mail Stop PETITIONS
Commissioner for Patents
Post Office Box 1450
Alexandria, VA 22313-1450

By hand: Customer Service Window
Mail Stop Petitions
Randolph Building
401 Dulany Street
Alexandria, VA 22314

By fax: (571) 273-8300
ATTN: Office of Petitions

Any questions concerning this matter may be directed to Jose' G Dees at (571) 272-1569.

Anthony Knight
Director
Office of Petitions

UNITED STATES PATENT AND TRADEMARK OFFICE

Commissioner for Patents
United States Patent and Trademark Office
P.O. Box 1450
Alexandria, VA 22313-1450
www.uspto.gov

LAW OFFICE LEO G. LENNA
1 MAKAMAH BEACH ROAD
NORTHPORT, NY 11768

MAILED

AUG 04 2010

OFFICE OF PETITIONS

In re Application of	:	
Raymond C. Maloney	:	
Application No. 11/906,705	:	ON PETITION
Filed: October 4, 2007	:	
Attorney Docket No. RMBB-100107	:	

This is a decision on the petition under the unintentional provisions of 37 CFR 1.137(b), filed June 17, 2010, to revive the above-identified application.

The petition is **GRANTED**.

The application became abandoned for failure to timely file a reply within the meaning of 37 CFR 1.113 to the final Office action of October 5, 2009. The proposed reply required for consideration of a petition to revive must be a Notice of Appeal (and appeal fee required by 37 CFR 41.20(b)(2), an amendment that *prima facie* places the application in condition for allowance, a Request for Continued Examination and submission (37 CFR 1.114), or the filing of a continuing application under 37 CFR 1.53(b). See MPEP 711.03(c)(II)(A)(2). No extensions of time pursuant to the provisions of 37 CFR 1.136(a) were obtained. Accordingly, the date of abandonment of this application is January 6, 2010. A Notice of Abandonment was mailed May 21, 2010.

The petition satisfies the requirements of 37 CFR 1.137(b) in that petitioner has supplied (1) the reply in the form of a Request for Continued Examination (RCE), including the fee of $405 and the submission required by 37 CFR 1.114, (2) the petition fee of $810 and (3) a proper statement of unintentional delay.

Telephone inquiries concerning this decision should be directed to Alicia Kelley at (571) 272-6059.

This application is being referred to Technology Center AU 3735 for processing of the RCE and for appropriate action by the Examiner in the normal course of business on the amendment submitted in accordance with 37 CFR 1.114.

Carl Friedman
Petitions Examiner
Office of Petitions

UNITED STATES PATENT AND TRADEMARK OFFICE

Commissioner for Patents
United States Patent and Trademark Office
P.O. Box 1450
Alexandria, VA 22313-1450
www.uspto.gov

NUTTER MCCLENNEN & FISH LLP
SEAPORT WEST
155 SEAPORT BOULEVARD
BOSTON, MA 02210-2604

MAILED

MAR 20 2012

OFFICE OF PETITIONS

In re Application of
Takao Ozawa, et al.
Application No. 11/906,735
Filed: October 2, 2007
Attorney Docket No. 109580-69363

DECISION GRANTING PETITION
UNDER 37 CFR 1.313(c)(2)

This is a decision on the petition under 37 CFR 1.313(c)(2), filed March 20, 2012, to withdraw the above-identified application from issue after payment of the issue fee.

The petition is **GRANTED**.

The above-identified application is withdrawn from issue for consideration of a submission under 37 CFR 1.114 (request for continued examination). *See* 37 CFR 1.313(c)(2).

Petitioner is advised that the issue fee paid on February 21, 2012 cannot be refunded. If, however, this application is again allowed, petitioner may request that it be applied towards the issue fee required by the new Notice of Allowance.[1]

Telephone inquiries regarding this decision should be directed to undersigned at (571) 272-1642. All other inquiries concerning the examination or status of this application should be directed to the Technology Center.

This application is being referred to Technology Center AU 2625 for processing of the request for continued examination under 37 CFR 1.114 and for consideration of the concurrently filed information disclosure statement.

/AMW/
April M. Wise
Petitions Examiner
Office of Petitions

---

[1] *The request to apply the issue fee to the new Notice may be satisfied by completing and returning the new Part B – Fee(s) Transmittal Form (along with any balance due at the time of submission). Petitioner is advised that the Issue Fee Transmittal Form* ***must*** *be completed and timely submitted to avoid abandonment of the application.*

UNITED STATES PATENT AND TRADEMARK OFFICE

Commissioner for Patents
United States Patent and Trademark Office
P.O. Box 1450
Alexandria, VA 22313-1450
www.uspto.gov

WOOD, PHILLIPS, KATZ, CLARK & MORTIMER
500 W. MADISON STREET
SUITE 3800
CHICAGO IL 60661

MAILED
AUG 30 2010
OFFICE OF PETITIONS

In re Application of	:
Agrawal et al.	:
Application No. 11/906,781	: ON APPLICATION FOR
Filed: October 3, 2007	: PATENT TERM ADJUSTMENT
Attorney Docket No.	:
IDE10639P00044US	:
Title: MODULATION OF	:
IMMUNOSTIMULATORY PROPERTIES OF	:
OLIGONUCLEOTIDE-BASED COMPOUNDS	:
BY OPTIMAL PRESENTATION OF 5'	:
ENDS	:

This is a decision on the "APPLICATION FOR PATENT TERM ADJUSTMENT RECONSIDERATION UNDER 37 C.F.R. §1.705(b)", filed April 23, 2010. Applicants submit that the correct patent term adjustment to be indicated on the patent is three hundred sixty-nine (369) days, not two hundred thirty-one (231) days as calculated by the Office as of the mailing of the initial determination of patent term adjustment.

The request for review of the patent term adjustment is **GRANTED**.

The Office has updated the PAIR screen to reflect that the correct Patent Term Adjustment (PTA) determination at the time of the mailing of the Notice of Allowance is three hundred sixty-nine **(369)** days. A copy of the updated PAIR screen, showing the correct determination, is enclosed.

The Office acknowledges submission of the $200.00 fee set forth in 37 CFR 1.18(e). No additional fees are required.

Applicants contend that the Office communication mailed on August 7, 2009 was improperly considered a notification under 35 USC §132.

Applicants' argument has been considered and deemed persuasive. A review of the record shows that a 369 day, not a 247 day adjustment should have been made for failure by the Office to mail at least one of the notifications under 35 U.S.C. 132 not later than fourteen months after the date the application was filed under 35 USC 1.111(a), pursuant to 37 CFR §1.702(a)(1). A non-final Office action was mailed on December 7, 2009, which is 14 months and 369 days after the application, was filed. The Notice of Non-Compliant Preliminary Amendment is not an action under 35 USC 132. As such the 247 adjustment will be removed, and the 369 day adjustment will be entered.

Further, since the notification under 35 USC 132 was not mailed until December 7, 2009, the submission of the information disclosure statement (IDS) on August 26, 2009 dose not constitute a failure to conclude prosecution. Thus, the 16 day reduction will be removed.

Applicants' delay prior to the mailing of the Notice of Allowance is 0 days. Office delay prior to the mailing of the Notice of Allowance is 369 days

In view thereof, the correct patent term adjustment at the time of the mailing of the notice of allowance is 369 days.

Any request for reconsideration of the patent term adjustment indicated on the patent must be timely filed within 2 months after issuance pursuant to 37 CFR 1.705(d) and **must** include payment of the required fee under 37 CFR 1.18(e).

The Office of Data Management has been advised of this decision. This matter is being referred to the Office of Data Management for issuance of the patent.

Telephone inquiries specific to this matter should be directed to Petitions Attorney Charlema Grant, at (571) 272-3215.

Anthony Knight
Director
Office of Petitions

Enclosure: Copy of REVISED PALM Screen

Patent Term Adjustments

PTA/PTE Information | Patent Term Adjustment | Patent Term Extension

Application Number*: 11906781 Search | Explanation of PTA Calculation | Explanation of PTE Calculation

PTA Calculations for Application: 11906781

Application Filing Date	10/03/2007	OverLapping Days Between (A and B) or (A and C)	0
Issue Date of Patent		Non-Overlapping USPTO Delays:	247
A Delays	247	PTO Manual Adjustment	138
B Delays	0	Applicant Delay (APPL)	16
C Delays	0	Total PTA (days)	369

* - Sorted Column

File Contents History

Action Number	Action Recorded Date	Action Due Date	Action Code	Action Description	Duration PTO	Duration APPL	Parent Action Number
62	08/28/2010		P028	Adjustment of PTA Calculation by PTO	138		0
51	04/07/2010		MN/=.	Mail Notice of Allowance			0
50	04/02/2010		IREV	Issue Revision Completed			0
49	04/02/2010		DVER	Document Verification			0
48	04/02/2010		N/=.	Notice of Allowance Data Verification Completed			0

47	03/29/2010		CNTA	Notice of Allowability			0
44	03/13/2010		C.AD	Correspondence Address Change			0
42	03/13/2010		FWDX	Date Forwarded to Examiner			0
43	02/12/2010	02/12/2010	DIST	Terminal Disclaimer Filed			41
41	02/12/2010		A...	Response after Non-Final Action			0
40	12/07/2009		MCTNF	Mail Non-Final Rejection			0
39	12/04/2009		CTNF	Non-Final Rejection			0
30	10/02/2009		FWDX	Date Forwarded to Examiner			0
36	08/26/2009		IDSC	Information Disclosure Statement considered			0
34	08/26/2009		RCAP	Reference capture on IDS			0
33	08/26/2009	08/10/2009	EIDS.	Electronic Information Disclosure Statement		16	29
28	08/26/2009		WIDS	Information Disclosure Statement (IDS) Filed			0
29	08/10/2009		A...	Response after Non-Final Action			0
27	08/07/2009	12/03/2008	MCTMS	Mail Miscellaneous Communication to Applicant	247		-1
26	08/06/2009		CTMS	Miscellaneous Action with SSP			0
25	06/26/2008		PG-ISSUE	PG-Pub Issue Notification			0
24	06/11/2008		DOCK	Case Docketed to Examiner in GAU			0
23	06/03/2008		TSSCOMP	IFW TSS Processing by Tech Center Complete			0
19	03/25/2008		OIPE	Application Dispatched from OIPE			0
18	03/03/2008		FLRCPT.U	Filing Receipt - Updated			0
17	03/03/2008		FLRCPT.U	Filing Receipt - Updated			0
16	03/03/2008		FLRCPT.U	Filing Receipt - Updated			0
15	03/03/2008		PGPC	Sent to Classification Contractor			0
14	03/03/2008		FLRCPT.U	Filing Receipt - Updated			0
13	03/03/2008		COMP	Application Is Now Complete			0
12	02/08/2008		FLFEE	Payment of additional filing fee/Preexam			0
10	02/08/2008		OATHDECL	A statement by one or more inventors satisfying the requirement under 35 USC 115, Oath of the Applic			0
35	01/02/2008		IDSC	Information Disclosure Statement considered			0
22	01/02/2008		RCAP	Reference capture on IDS			0
21	01/02/2008		M844	Information Disclosure Statement (IDS) Filed			0
9	01/02/2008		WIDS	Information Disclosure Statement (IDS) Filed			0
8	01/02/2008		INCD	Notice Mailed--Application Incomplete--Filing Date Assigned			0
7	01/02/2008		FLRCPT.O	Filing Receipt			0
5	12/26/2007		L128	Cleared by L&R (LARS)			0
4	10/22/2007		CRFE	CRF Is Good Technically / Entered into Database			0

3	10/19/2007	L198	Referred to Level 2 (LARS) by OIPE CSR	0
2	10/15/2007	SCAN	IFW Scan & PACR Auto Security Review	0
1	10/04/2007	IEXX	Initial Exam Team nn	0
20	10/03/2007	A.PE	Preliminary Amendment	0
11	10/03/2007	CLAIM	Claim Preliminary Amendment	0
6	10/03/2007	CRFL	CRF Disk Has Been Received by Preexam / Group / PCT	0

Export to: Excel

UNITED STATES PATENT AND TRADEMARK OFFICE

Commissioner for Patents
United States Patent and Trademark Office
P.O. Box 1450
Alexandria, VA 22313-1450
www.uspto.gov

MAILED
JAN 27 2012
OFFICE OF PETITIONS

LAW OFFICE OF DALE B HALLING
3595 FOUNTAIN BOULEVARD SUITE A2
COLORADO SPRINGS CO 80910

In re Application of	:	
Baird, et al.	:	
Application No. 11/906,809	:	ON PETITION
Filed: October 4, 2007	:	
Attorney Docket No. BLW0702	:	

This is in response to petition to revive under 37 CFR 1.137(b), filed December 23, 2011.

The petition under 37 CFR 1.137(b) is **GRANTED**.

The above-identified application became abandoned for failure to timely file an Appeal Brief. Applicants filed a Notice of Appeal on February 18, 2011. Accordingly, Applicants had an extendable period of two (2) months to file an Appeal brief. No Appeal Brief having been filed, the application became abandoned on April 19, 2011. The Office mailed a Notice of Abandonment on December 16, 2011.

With the instant petition, petitioner paid the petition fee, made the proper statement of unintentional delay, and submitted the required reply in the form of an RCE.

The application is being forwarded to Group Art Unit 2464 for consideration of the RCE, filed December 23, 2011.

Telephone inquiries concerning this decision may be directed to the undersigned at 571-272-3207.

Cliff Congo
Petitions Attorney
Office of Petitions

04-15-11

Doc Code: PET.RELIEF
Document Description: Certification and Request for Disaster Relief

PTO/SB/425 (03-11)

OPAP
APR 13 2011
IAP11
PATENT & TRADEMARK OFFICE

CERTIFICATION AND REQUEST FOR RELIEF DUE TO EVENTS OF MARCH 11, 2011, IN JAPAN (Page 1 of 2)

Nonprovisional Application Number or Control Number (if applicable): 11/906,829	Patent Number (if applicable):
First Named Inventor: Linh Doan	Title of Invention: Method and apparatus for controlling ...

APPLICANT/PATENTEE/REEXAMINATION PARTY HEREBY CERTIFIES AND REQUESTS THE FOLLOWING FOR THE ABOVE-IDENTIFIED APPLICATION/PATENT/REEXAMINATION PROCEEDING.

1. FOR PATENT APPLICATIONS AND REEXAMINATION PROCEEDINGS PENDING IN THE USPTO AS OF MARCH 11, 2011, IN WHICH A COMMUNICATION FROM THE USPTO IS SOUGHT TO BE REMAILED:

   a. One or more inventors, an assignee, or a correspondence address (for the application/proceeding) is in an area of Japan affected by the earthquake and/or tsunami of March 11, 2011.

   b. A reply or response to an Office action (final, non-final, or other), a notice of allowance, or other Office notice (hereinafter collectively referred to as "Office communication") is outstanding on March 11, 2011.

   c. The statutory or non-statutory time period set for response has not yet expired.

   d. Withdrawal and reissuance of the Office communication is requested.

   e. It is acknowledged that if this request is not made within sufficient time so that withdrawal and reissuance of the Office communication occur prior to expiration of the statutory or non-statutory time period (as permitted to be extended under 37 CFR 1.136(a), or as extended under 37 CFR 1.550(c) or 1.956), this request may not be granted.

   f. The need for the reissuance of the Office communication was due to the effects of the earthquake and/or tsunami of March 11, 2011.

   g. This request is being sent via EFS-Web or by mail directed to Mail Stop Petition, Commissioner for Patents, P.O. Box 1450, Alexandria, VA 22313-1450.

2. FOR PATENTEES WHO WERE UNABLE TO TIMELY PAY A PATENT MAINTENANCE FEE DURING THE SIX-MONTH GRACE PERIOD FOLLOWING THE WINDOW TO PAY THE MAINTENANCE FEE:

   a. The original window of time to pay the maintenance fee without the surcharge required by 37 CFR 1.20(h) expired on or after March 11, 2011.

   b. The delay in paying the fee was due to the effects of the earthquake and/or tsunami of March 11, 2011.

   c. The USPTO is requested to *sua sponte* waive the surcharge in 37 CFR 1.20(h) for paying a maintenance fee during the six-month grace period following the window to pay the maintenance fee.

   d. This request and payment of the maintenance fee during the six-month grace period following the window to pay the maintenance fee is being mailed to: Director of the United States Patent and Trademark Office, Attn: Maintenance Fee, 2051 Jamieson Avenue, Suite 300, Alexandria, VA 22314; or being transmitted via facsimile to: 571-273-6500.

AUS 06030. ALPINE. 108 AUS

CERTIFICATION AND REQUEST FOR RELIEF DUE TO EVENTS OF MARCH 11, 2011, IN JAPAN (Page 2 of 2)

3. FOR PATENTEES WHO NEED TO FILE A PETITION TO ACCEPT A DELAYED MAINTENANCE FEE PAYMENT UNDER 37 CFR 1.378(c):

   a. The maintenance fee payment was required to have been paid after March 10, 2011.

   b. A petition under 37 CFR 1.378(c) (using USPTO form PTO/SB/66 – Petition to Accept Unintentionally Delayed Payment of Maintenance Fee in an Expired Patent (37 CFR 1.378(c))) is being promptly filed accompanied by the applicable maintenance fee payment (but not the surcharge under 37 CFR 1.20(i)).

   c. The delay in payment of the maintenance fee was due to the effects of the earthquake and/or tsunami of March 11, 2011.

   d. The USPTO is requested to *sua sponte* waive the surcharge in 37 CFR 1.20(i) for accepting a delayed maintenance fee payment.

   e. It is acknowledged that the petition to accept a delayed maintenance fee payment under 37 CFR 1.378(c) must be filed by March 11, 2012, in order to be entitled to a waiver of the surcharge under 37 CFR 1.20(i).

   f. It is acknowledged that the petition to accept a delayed maintenance fee payment under 37 CFR 1.378(c) must be filed within twenty-four months from the expiration date of the patent. *See* 35 U.S.C 41(c).

   g. This request and the petition to accept a delayed maintenance fee payment under 37 CFR 1.378(c) is being submitted via EFS-Web or by mail directed to Mail Stop Petition, Commissioner for Patents, P.O. Box 1450, Alexandria, VA 22313-1450.

4. FOR NONPROVISIONAL PATENT APPLICATIONS FILED WITHOUT AN EXECUTED OATH OR DECLARATION OR PAYMENT OF THE BASIC FILING FEE, SEARCH FEE, AND/OR EXAMINATION FEE:

   a. The nonprovisional patent application was filed on or after March 11, 2011, and prior to April 12, 2011.

   b. The late filing of the oath or declaration or the basic filing fee, search fee, or examination fee was due to the effects of the earthquake and/or tsunami of March 11, 2011.

   c. The USPTO is requested to *sua sponte* waive the surcharge set forth in 37 CFR 1.16(f) for the late filing of the oath or declaration or basic filing fee, search fee, and/or examination fee.

   d. This request, together with the executed oath or declaration or the basic filing fee, search fee, or examination fee, as well as the reply to the Notice to File Missing Parts, is being submitted via EFS-Web or by mail directed to Mail Stop Missing Parts, Commissioner for Patents, P.O. Box 1450, Alexandria, VA 22313-1450.

Signature	Date April 11, 2011
Name (Print/Typed) Yasuo Muramatsu	Practitioner Registration Number 38,684

Note: *Signatures of all the inventors, § 1.41(b) applicants, or assignees of record of the entire interest or their representative(s), or reexamination requesters at the appeal stage are required in accordance with 37 CFR 1.33 and 11.18. Please see 37 CFR 1.4(d) for the form of the signature. If necessary, submit multiple forms for more than one signature, see below*.*

☐ *Total of _____ forms are submitted.

UNITED STATES PATENT AND TRADEMARK OFFICE

Commissioner for Patents
United States Patent and Trademark Office
P.O. Box 1450
Alexandria, VA 22313-1450
www.uspto.gov

MURAMATSU & ASSOCIATES
SUITE 310
114 PACIFICA
IRVINE CA 92618

MAILED
APR 26 2011
OFFICE OF PETITIONS

In re Application of	:	
Doan et al.	:	
Application No. 11/906,829	:	DECISION ON PETITION
Filed: October 4, 2007	:	
Attorney Docket No. ALPINE.108AUS	:	

This is a decision on the request filed April 13, 2011, seeking relief under the provisions of an announcement by the Under Secretary and Director of the United States Patent and Trademark Office on March 17, 2011, http://www.uspto.gov/patents/announce/japan_relief_2011mar17.pdf, providing relief to inventors and patent owners in areas affected by the earthquake and resulting tsunami of March 11, 2011.

The request for relief is **GRANTED**.

In the above-identified application, an Office action was mailed on January 18 2011. The instant petition was filed prior to the expiration of the period for reply and the certifications for granting of relief are considered to be met by the submission of the request.

Telephone inquires concerning this decision should be directed to the undersigned at 571-272-7751. All other inquires concerning either the examination or status of the application should be directed to the Technology Center.

This application is being referred to the Technology Center, Art Unit 2629 for re-mailing the Office action of January 18, 2011. The period for reply will run from the mailing date of the Office action.

/Joan Olszewski/
Joan Olszewski
Petitions Examiner
Office of Petitions

UNITED STATES PATENT AND TRADEMARK OFFICE

Commissioner for Patents
United States Patent and Trademark Office
P.O. Box 1450
Alexandria, VA 22313-1450
www.uspto.gov

BRIGGS AND MORGAN P.A.
2200 IDS CENTER
80 SOUTH 8TH ST.
MINNEAPOLIS MN 55402

MAILED

FEB 23 2012

OFFICE OF PETITIONS

In re Application of	:	
DUFRESNE DE VIREL	:	
Application No. 11/906,834	:	DECISION ON PETITION
Filed: October 4, 2007	:	
Attorney Docket No. 33155.47	:	

This is a decision on the petition under the unintentional provisions of 37 CFR 1.137(b), filed December 9, 2011, to revive the above-identified application.

The petition is **GRANTED**.

The application became abandoned for failure to timely pay the issue and publication fees on or before December 7, 2011 as required by the Notice of Allowance mailed September 7, 2011. A Notice of Abandonment was mailed on December 14, 2011.

The petition satisfies the conditions for revival pursuant to the provisions of 37 CFR 1.137(b) in that (1) the reply in the form of the issue and publication fees; (2) the petition fee; and (3) the required statement of unintentional delay have been received. Accordingly, the reply to the Notice of Allowance mailed September 7, 2011, is accepted as having been unintentionally delayed.

Telephone inquiries concerning this decision should be directed to the undersigned at (571) 272-3208.

This application is being referred to the Office of Data Management to be processed into a patent.

/KOC/
Karen Creasy
Petitions Examiner
Office of Petitions

UNITED STATES PATENT AND TRADEMARK OFFICE

Commissioner for Patents
United States Patent and Trademark Office
P.O. Box 1450
Alexandria, VA 22313-1450
www.uspto.gov

GREENBERG TRAURIG, LLP
ONE INTERNATIONAL PLACE, 20TH FL
ATTN: PATENT ADMINISTRATOR
BOSTON MA 02110

MAILED

APR 01 2011

OFFICE OF PETITIONS

In re Application of	:	
Tu et al.	:	DECISION ON PETITION
Application No. 11/906,901	:	TO WITHDRAW
Filed: October 4, 2007	:	FROM RECORD
Attorney Docket No. 104442-010200	:	

This is a decision on the Request to Withdraw as attorney or agent of record under 37 C.F.R. § 1.36(b), filed February 25, 2011.

The request is **NOT APPROVED**.

The Office will only accept correspondence address changes to the most current address information provided for the assignee of the entire interest *who properly became of record under 37 CFR 3.71,* or, if no assignee of the entire interest has properly been made of record, the most current address information provided for the first named inventor. 37 CFR 3.71(c) states:

> ***An assignee becomes of record either in a national patent application or a reexamination proceeding by filing a statement in compliance with § 3.73(b) that is signed by a party who is authorized to act on behalf of the assignee.***

Therefore, as there is currently no Statement under 37 CFR 3.73(b) of record in the instant application, the Office cannot change the correspondence address to the address on the Request to Withdraw.

All future communications from the Office will continue to be directed to the above-listed address until otherwise notified by applicant.

Currently, there is no outstanding Office action that requires a reply.

Telephone inquires concerning this decision should be directed to the undersigned at (571) 272-7751.

Joan Olszewski
Petitions Examiner
Office of Petitions

Doc Code: PET.AUTO **Document Description: Petition automatically granted by EFS-Web**	PTO/SB/83 U.S. Patent and Trademark Office Department of Commerce

Electronic Petition Request	**REQUEST FOR WITHDRAWAL AS ATTORNEY OR AGENT AND CHANGE OF CORRESPONDENCE ADDRESS**
Application Number	11906901
Filing Date	04-Oct-2007
First Named Inventor	Bin Tu
Art Unit	3688
Examiner Name	DARNELL POUNCIL
Attorney Docket Number	104442-010200
Title	Interactive presentation and distribution of web content

◉ Please withdraw me as attorney or agent for the above identified patent application and the practitioners of record associated with Customer Number: 35893

The reason(s) for this request are those described in 37 CFR:

10.40(c)(1)(iv)

10.40(b)(c)(1)(vi)

Certifications

☒ I/We have given reasonable notice to the client, prior to the expiration of the response period, that the practitioner(s) intend to withdraw from employment

☒ I/We have delivered to the client or a duly authorized representative of the client all papers and property (including funds) to which the client is entitled

☒ I/We have notified the client of any responses that may be due and the time frame within which the client must respond

Change the correspondence address and direct all future correspondence to the first named inventor or assignee that has properly made itself of record pursuant to 37 CFR 3.71:

Name	Bin Tu
Address	13220 Dutrow Drive
City	Clarksburg
State	MD
Postal Code	20871

Country	US
I am authorized to sign on behalf of myself and all withdrawing practitioners.	
Signature	/Seth A. Milman/
Name	Seth A. Milman
Registration Number	64573

UNITED STATES PATENT AND TRADEMARK OFFICE

Commissioner for Patents
United States Patent and Trademark Office
P.O. Box 1450
Alexandria, VA 22313-1450
www.uspto.gov

Decision Date : April 13,2011

In re Application of :

Bin Tu

Application No : 11906901

Filed : 04-Oct-2007

Attorney Docket No : 104442-010200

DECISION ON REQUEST TO WITHDRAW AS ATTORNEY/AGENTOF RECORD

This is an electronic decision on the Request to Withdraw as attorney or agent of record under 37 CFR § 1.36(b), filed April 13,2011

The request is **APPROVED.**

The request was signed by Seth A. Milman (registration no. 64573) on behalf of all attorneys/agents associated with Customer Number 35893 . All attorneys/agents associated with Cusotmer Number 35893 have been withdrawn.

Since there are no remaining attorneys of record, all future communications from the Office will be directed to the first named inventor or assignee that has properly made itself of record pursuant to 37 CFR 3.71, with correspondence address:

Name	Bin Tu
Name2	
Address 1	13220 Dutrow Drive
Address 2	
City	Clarksburg
State	MD
Postal Code	20871
Country	US

As a reminder, requester is required to inform the first named inventor or assignee that has properly made itself of record pursuant to 37 CFR 3.71 of the electronically processed petition.

Telephone inquiries concerning this decision should be directed to the Patent Electronic Business Center (EBC) at 866-217-9197.

Office of Petitions

UNITED STATES PATENT AND TRADEMARK OFFICE

COMMISSIONER FOR PATENTS
UNITED STATES PATENT AND TRADEMARK OFFICE
P.O. BOX 1450
ALEXANDRIA, VA 22313-1450
www.uspto.gov

MCCARTER & ENGLISH, LLP BOSTON
265 Franklin Street
Boston MA 02110

MAILED
MAR 11 2011
OFFICE OF PETITIONS

In re Application :
Morgan, et al. :
Application No. 11/906,939 : PATENT TERM ADJUSTMENT
Filing or 371(c) Date: October 4, 2007 :
Dkt. No.: 117726-15609 :

This is in response to the application for patent term adjustment under 37 CFR 1.705(b), filed February 9, 2011.

Applicant submits that the correct patent term adjustment to be indicated on the patent is 622 days, not 390 days as calculated by the Office as of the mailing of the initial determination of patent term adjustment. Applicant requests this correction on the basis that the Office will take in excess of three years to issue this patent.

Insofar as the instant application for patent term adjustment requests reconsideration of the patent term adjustment as it relates to the Office's failure to issue the patent within 3 years of the filing date and for applicant delays accrued post allowance, the application for patent term adjustment under 37 CFR 1.705(b) is DISMISSED as PREMATURE.

Knowledge of the actual date the patent issues is required to calculate the amount, if any, of additional patent term patentee is entitled to for Office failure to issue the patent within 3 years. See, § 1.702(b). (This is true even where a request for continued examination (RCE) was filed). The computer will not undertake the § 1.702(b) calculation until the actual date of issuance of the patent has been determined. Likewise, the computer will not calculate any further Office delay under § 1.702(a)(4) or applicant delay under § 1.704(c)(10) until the actual date of issuance of the patent has been determined. As such, the Office can not make a determination on the correctness of the patent term adjustment until the patent has issued.

Requesting reconsideration of the patent term adjustment to be indicated on the patent based on the initial determination of patent term adjustment and a projected issuance date of the patent (or even the filing date of the request for continued examination) is premature. Accordingly, it is appropriate to dismiss as premature such a request.

Applicant is advised that they may wait until the time of the issuance of the patent and file a request for reconsideration of the patent term adjustment pursuant to 37 CFR 1.705(d). As the USPTO does not calculate the amount of time earned pursuant to 37 CFR 1.702(b) until the time of the issuance of the patent, the Office will consider any request for reconsideration of the

patent term adjustment due to an error in the calculation of 37 CFR 1.702(b) to be timely if the request for reconsideration is filed within two months of the issuance of the patent. However, as to all other bases for contesting the initial determination of patent term adjustment received with the notice of allowance, applicant must timely file an application for patent term adjustment prior to the payment of the issue fee[1].

The required patent term adjustment application fee under 37 CFR 1.705(b) of $200.00 has been charged to the authorized deposit account. See, 37 CFR 1.18(e).

However, any request for reconsideration of the patent term adjustment indicated on the patent must be timely filed within 2 months after issuance pursuant to 37 CFR 1.705(d) and **must** include payment of the required fee under 37 CFR 1.18(e).

The application file is being forwarded to the Office of Data Management for issuance of the patent. The patent term adjustment indicated on the patent (as shown on the Issue Notification mailed about three weeks prior to patent issuance) will include any additional adjustment accrued both for Office delay in issuing the patent more than four months after payment of the issue fee and satisfaction of all outstanding requirements, and for the Office taking in excess of three years to issue the patent (to the extent that the three-year period does not overlap with periods already accorded).

Telephone inquiries specific to this decision should be directed to the undersigned at (571) 272-3205.

/ALESIA M. BROWN/

Alesia M. Brown
Petitions Attorney
Office of Petitions

---

[1] For example, if applicant disputes both the calculation of patent term adjustment under 37 CFR 1.702(a)(1) for Office failure to mail a first Office action or notice of allowance not later than fourteen months after the date on which the application was filed and under 37 CFR 1.702(b) for Office failure to issue a patent within three years of the actual filing date of the application, then applicant must still timely file an application for patent term adjustment prior to the payment of the issue fee to contest the calculation of Office delay in issuing a first Office action or notice of allowance. See 37 CFR 1.705(b) and 35 U.S.C. 154(b)(3)(B). A dispute as to the calculation of the §1.702(a)(1) period raised on request for reconsideration of patent term adjustment under 37 CFR 1.705(d) will be dismissed as untimely filed.

UNITED STATES PATENT AND TRADEMARK OFFICE

Commissioner for Patents
United States Patent and Trademark Office
P.O. Box 1450
Alexandria, VA 22313-1450
www.uspto.gov

MAILED
SEP 12 2011
OFFICE OF PETITIONS

MCCARTER & ENGLISH, LLP BOSTON
265 Franklin Street
Boston MA 02110

In re Patent No. 7,935,658
Issued: May 3, 2011
Application No. 11/906,939
Filing or 371(c) Date: October 4, 2007
Dkt. No.: 117726-15609

: DECISION ON APPLICATION FOR
: PATENT TERM ADJUSTMENT and
: NOTICE OF INTENT TO ISSUE
: CERTIFICATE OF CORRECTION
:

This is a decision on the application for patent term adjustment under 37 CFR 1.705(d) filed on June 30, 2011 requesting an increase in patent term adjustment from 481 days to 601 days.

The petition for reconsideration of the patent term adjustment of 481 days is **GRANTED TO THE EXTENT INDICATED HEREIN**.

The above-identified application matured into U.S. Patent No. 7,935,658 on May 3, 2011. The patent issued with a patent term adjustment of 481 days. The instant application for patent term adjustment was timely filed June 30, 2011. Patentees contest the reduction of 120 days accorded pursuant to 37 CFR 1.704(c)(10). Patentees assert that the reduction in connection with the submission filed November 23, 2010 is either zero days or nine days.

Patentees' arguments have been carefully considered and found in part persuasive.

Subsequent to the mailing of the Notice of Allowance on November 10, 2010, applicants filed an information disclosure statement (IDS) on November 23, 2010. A Notice of Non-Compliant Information Disclosure Statement (Notice) was filed in response thereto on December 2, 2010.

Thus, in accordance with 37 CFR 1.704(c)(10), the patent is subject to a 10 day reduction in patent term adjustment. The reduction commenced November 23, 2010, the date that the IDS was filed, and ended December 2, 2010, the date that the Notice was mailed in response thereto.

Patentees are correct in that the reduction with respect to the IDS filed November 23, 2010 is not 120 days. Thus, the application for patent term adjustment is granted to the extent that the correct reduction is 10 days in connection with the IDS filed November 23, 2010.

As indicated in the Notice, the IDS lacked the statement specified under 37 CFR 1.97(e). In response thereto, applicants made a further post-allowance submission on December 17, 2010. The patent is subject to 120 days of reduction pursuant to 37 CFR 1.704(c)(10) in this regard pursuant to 37 CFR 1.704(c)(10). The reduction commenced December 17, 2010, the date that

the post-allowance submission was filed, and ended 120 days later, the maximum reduction allowed per 37 CFR 1.704(c)(10)(ii).

Patentees arguments that the submission on December 17, 2010 was not a failure to engage in reasonable efforts to conclude prosecution (processing or examination) because it was filed for the purpose of "completeness of the record" have been considered, but are not persuasive.

In accordance with 37 CFR 1.704(c)(10), submission of an amendment under § 1.312 or other paper after a notice of allowance has been given or mailed will result in a reduction of patent term adjustment. As neither the November 23, 2010 IDS or the December 17, 2010 submission complied with 37 CFR 1.704(d), each submission resulted in a reduction of patent term adjustment.

In view thereof, at the time of issuance, the patent was entitled to an overall patent term adjustment of 471 days (601 days pursuant to 37 CFR 1.702 less 130 days pursuant to 37 CFR 1.704).

The application is being forwarded to the Certificates of Corrections Branch for issuance of a certificate of correction. The Office will issue a certificate of correction indicating that the term of the above-identified patent is extended or adjusted by 471 days.

It is noted that the Office issued a Notice of proposed rulemaking entitled *Revision of Patent Term Extension and Adjustment Provisions Relating to Appellate Review and Information Disclosure Statements*, 76 FR 18990 (April 6, 2011). To the extent that the final rule on *Revision of Patent Term Extension and Adjustment Provisions Relating to Appellate Review* revises the interpretation of appellate review applied in this decision, Patentees are given **one (1) month or thirty (30) days**, whichever is longer, from the date of the final rule to file a request for reconsideration. No extensions of time will be granted under § 1.136.

Nothing in this decision shall be construed as a waiver of the requirement of 35 U.S.C. 154(b)(4) that any civil action by an applicant dissatisfied with a determination made by the Director under 35 U.S.C. 154(b)(3) be filed in the United States District Court for the District of Columbia within 180 days after the grant of the patent.

Telephone inquiries specific to this matter should be directed to the undersigned at (571) 272-3205.

/ALESIA M. BROWN/

Alesia M. Brown
Attorney Adviser
Office of Petitions

Enclosure: Copy of DRAFT Certificate of Correction

UNITED STATES PATENT AND TRADEMARK OFFICE

CERTIFICATE OF CORRECTION

PATENT : 7,935,658

DATED : May 3, 2011 **DRAFT**

INVENTOR(S) : Morgan, et al.

It is certified that error appears in the above-identified patent and that said Letters Patent is hereby corrected as shown below:

On the cover page,

[*] Notice: Subject to any disclaimer, the term of this patent is extended or adjusted under 35 USC 154(b) by 481 days

Delete the phrase "by 481 days" and insert – by 471 days--

UNITED STATES PATENT AND TRADEMARK OFFICE

Commissioner for Patents
United States Patent and Trademark Office
P.O. Box 1450
Alexandria, VA 22313-1450
www.uspto.gov

Decision Date : December 12, 2011

In re Application of :

Daniel Stein

Application No : 11906958

Filed : 03-Oct-2007

Attorney Docket No : 37023-501

DECISION ON REQUEST TO WITHDRAW AS ATTORNEY/AGENTOF RECORD

This is an electronic decision on the Request to Withdraw as attorney or agent of record under 37 CFR § 1.36(b), filed December 12, 2011

The request is **APPROVED.**

The request was signed by David Johnson (registration no. 41874) on behalf of all attorneys/agents associated with Customer Number 30623 . All attorneys/agents associated with Cusotmer Number 30623 have been withdrawn.

Since there are no remaining attorneys of record, all future communications from the Office will be directed to the first named inventor or assignee that has properly made itself of record pursuant to 37 CFR 3.71, with correspondence address:

Name	Sandra Vander Ploeg
Name2	Florida Registered Paralegal
Address 1	Akerman Senterfitt
Address 2	401 E. Jackson Street, Suite 1700
City	Tampa
State	FL
Postal Code	33602
Country	US

As a reminder, requester is required to inform the first named inventor or assignee that has properly made itself of record pursuant to 37 CFR 3.71 of the electronically processed petition.

Telephone inquiries concerning this decision should be directed to the Patent Electronic Business Center (EBC) at 866-217-9197.

Office of Petitions

Doc Code: PET.AUTO **Document Description: Petition automatically granted by EFS-Web**	PTO/SB/83 U.S. Patent and Trademark Office Department of Commerce

Electronic Petition Request	**REQUEST FOR WITHDRAWAL AS ATTORNEY OR AGENT AND CHANGE OF CORRESPONDENCE ADDRESS**
Application Number	11906958
Filing Date	03-Oct-2007
First Named Inventor	Daniel Stein
Art Unit	1654
Examiner Name	ROY TELLER
Attorney Docket Number	37023-501
Title	Prhormone composition and method of use thereof

◉ Please withdraw me as attorney or agent for the above identified patent application and the practitioners of record associated with Customer Number: 30623

The reason(s) for this request are those described in 37 CFR:

10.40(c)(1)(vi)

Certifications

☒ I/We have given reasonable notice to the client, prior to the expiration of the response period, that the practitioner(s) intend to withdraw from employment

☒ I/We have delivered to the client or a duly authorized representative of the client all papers and property (including funds) to which the client is entitled

☒ I/We have notified the client of any responses that may be due and the time frame within which the client must respond

Change the correspondence address and direct all future correspondence to the first named inventor or assignee that has properly made itself of record pursuant to 37 CFR 3.71:

Name	Sandra Vander Ploeg Florida Registered Paralegal
Address	Akerman Senterfitt 401 E. Jackson Street, Suite 1700
City	Tampa
State	FL
Postal Code	33602
Country	US

I am authorized to sign on behalf of myself and all withdrawing practitioners.	
Signature	/David Johnson/
Name	David Johnson
Registration Number	41874

UNITED STATES PATENT AND TRADEMARK OFFICE

Commissioner for Patents
United States Patent and Trademark Office
P.O. Box 1450
Alexandria, VA 22313-1450
www.uspto.gov

MARGARET ANDERSON
106 E. 6TH STREET, SUITE 900
AUSTIN TX 78701

MAILED
MAR 16 2011
OFFICE OF PETITIONS

In re Application of	:	
Cohen et al.	:	DECISION ON PETITION
Application No. 11/906,988	:	TO WITHDRAW
Filed: October 3, 2007	:	FROM RECORD
Attorney Docket No. QQ1-0105US	:	

This is a decision on the Request to Withdraw as attorney or agent of record under 37 C.F.R. § 1.36(b), filed January 26, 2011.

The request is **NOT APPROVED**.

The Office will only accept correspondence address changes to the most current address information provided for the assignee of the entire interest *who properly became of record under 37 CFR 3.71,* or, if no assignee of the entire interest has properly been made of record, the most current address information provided for the first named inventor. 37 CFR 3.71(c) states:

> ***An assignee becomes of record either in a national patent application or a reexamination proceeding by filing a statement in compliance with § 3.73(b) that is signed by a party who is authorized to act on behalf of the assignee.***

According to a review of current USPTO records petitioner has not requested the address be changed to a properly recorded assignee or the first listed inventor. The Customer Number 55922 is neither the first named inventor nor the assignee who properly became of record under 37 CFR 3.71 As such, all future communications from the Office will continue to be directed to the above-listed address until otherwise notified by applicant.

Further, the address given on the petition differs from the address of record. A courtesy copy of this decision is being mailed to the address given on the petition; however, the Office will mail all future correspondence solely to the address of record.

Currently, there is no outstanding Office action that requires a reply.

Telephone inquires concerning this decision should be directed to the undersigned at (571) 272-7751.

Joan Olszewski
Petitions Examiner
Office of Petitions

cc: LEE & HAYES, PLLC
601 W RIVERSIDE
SUITE 1400
SPOKANE, WA 99201

UNITED STATES PATENT AND TRADEMARK OFFICE

Commissioner for Patents
United States Patent and Trademark Office
P.O. Box 1450
Alexandria, VA 22313-1450
www.uspto.gov

MINTZ, LEVIN, COHN, FERRIS, GLOVSKY AND POPEO, P.C
ONE FINANCIAL CENTER
BOSTON MA 02111

MAILED

SEP 21 2011

OFFICE OF PETITIONS

In re Application of
OUTI ELISA MARKKI et al
Application No. 11/907,116
Filed: October 9, 2007
Attorney Docket No. 39700-554C01US/NC30620US

: DECISION ON PETITION

This is a decision on the petition under 37 CFR 1.59(b), filed January 16, 2009, to expunge information from the above identified application.

The petition is **GRANTED**.

Petitioner requests that a document entitled Response to Restriction Requirement, filed February 16, 2009, be expunged from the record. Petitioner states that either (A) that the information contains trade secret material, proprietary material and/or material that is subject to a protective order which has not been made public; or (B) that the information submitted was unintentionally submitted and the failure to obtain its return would cause irreparable harm to the party who submitted the information or to the party in interest on whose behalf the information was submitted, and the information has not otherwise been made public. The petition fee set forth in 37 CFR 1.17(g) has been paid.

The information in question has been determined by the undersigned to not be material to the examination of the instant application.

In a paper file, the unintentionally submitted exhibits could, but not necessarily would, have been physically removed from the file wrapper and returned to applicant. In the IFW realm the corresponding action(s) is to close the document and also remove such from the listing of "Public[ly available] Documents." It is agreed that it would be appropriate in this instance to close the information in application serial no. 11/907,116 that was erroneously filed in the above identified application, and also remove such from the listing of publicly available documents for this Image File Wrapper (IFW).

Applicant is required to retain the expunged material(s) for the life of any patent which issues on the above-identified application.

Telephone inquiries concerning this communication should be directed to the undersigned at 571-272-0602.

Thurman K. Page
Petitions Examiner
Office of Petitions

Doc Code: PET.AUTO Document Description: Petition automatically granted by EFS-Web	PTO/SB/140 U.S. Patent and Trademark Office Department of Commerce

Electronic Petition Request	**PETITION TO WITHDRAW AN APPLICATION FROM ISSUE AFTER PAYMENT OF THE ISSUE FEE UNDER 37 CFR 1.313(c)**
Application Number	11907167
Filing Date	10-Oct-2007
First Named Inventor	Yoshihisa Shimazu
Art Unit	2624
Examiner Name	TAHMINA ANSARI
Attorney Docket Number	079195-0252
Title	MOTION DETECTION DEVICE, MOS (METAL-OXIDE SEMICONDUCTOR) INTEGRATED CIRCUIT, AND VIDEO SYSTEM

An application may be withdrawn from issue for further action upon petition by the applicant. To request that the Office withdraw an application from issue, applicant must file a petition under this section including the fee set forth in § 1.17(h) and a showing of good and sufficient reasons why withdrawal of the application from issue is necessary.

APPLICANT HEREBY PETITIONS TO WITHDRAW THIS APPLICATION FROM ISSUE UNDER 37 CFR 1.313(c).

A grantable petition requires the following items:
(1) Petition fee; and
(2) One of the following reasons:
(a) Unpatentability of one or more claims, which must be accompanied by an unequivocal statement that one or more claims are unpatentable, an amendment to such claim or claims, and an explanation as to how the amendment causes such claim or claims to be patentable;
(b) Consideration of a request for continued examination in compliance with § 1.114 (for a utility or plant application only); or
(c) Express abandonment of the application. Such express abandonment may be in favor of a continuing application, but not a CPA under 37 CFR 1.53(d).

Petition Fee

- ☐ Applicant claims SMALL ENTITY status. See 37 CFR 1.27.
- ☐ Applicant is no longer claiming SMALL ENTITY status. See 37 CFR 1.27(g)(2).
- ☐ Applicant(s) status remains as SMALL ENTITY.
- ☒ Applicant(s) status remains as other than SMALL ENTITY

Reason for withdrawal from issue

○ One or more claims are unpatentable

◉ Consideration of a request for continued examination (RCE) (List of Required Documents and Fees)

○ Applicant hereby expressly abandons the instant application (any attorney/agent signing for this reason must have power of attorney pursuant to 37 CFR 1.32(b)).

RCE request,submission, and fee.

☐ I certify, in accordance with 37 CFR 1.4(d)(4) that : The RCE request ,submission, and fee have already been filed in the above-identified application on

☒ Are attached.

THIS PORTION MUST BE COMPLETED BY THE SIGNATORY OR SIGNATORIES

I certify, in accordance with 37 CFR 1.4(d)(4) that I am:

◉ An attorney or agent registered to practice before the Patent and Trademark Office who has been given power of attorney in this application.

○ An attorney or agent registered to practice before the Patent and Trademark Office, acting in a representative capacity.

○ A sole inventor

○ A joint inventor; I certify that I am authorized to sign this submission on behalf of all of the inventors

○ A joint inventor; all of whom are signing this e-petition

○ The assignee of record of the entire interest that has properly made itself of record pursuant to 37 CFR 3.71

Signature	/Michael E. Fogarty/
Name	Michael E. Fogarty
Registration Number	36139

UNITED STATES PATENT AND TRADEMARK OFFICE

Commissioner for Patents
United States Patent and Trademark Office
P.O. Box 1450
Alexandria, VA 22313-1450
www.uspto.gov

Decision Date : November 1,2011

In re Application of :

Yoshihisa Shimazu

DECISION ON PETITION

UNDER CFR 1.313(c)(2)

Application No : 11907167

Filed : 10-Oct-2007

Attorney Docket No : 079195-0252

This is an electronic decision on the petition under 37 CFR 1.313(c)(2), filed November 1,2011 , to withdraw the above-identified application from issue after payment of the issue fee.

The petition is **GRANTED.**

The above-identified application is withdrawn from issue for consideration of a submission under 37 CFR 1.114 (request for continued examination). See 37 CFR 1.313(c)(2).

Petitioner is advised that the issue fee paid in this application cannot be refunded. If, however, this application is again allowed, petitioner may request that it be applied towards the issue fee required by the new Notice of Allowance.

Telephone inquiries concerning this decision should be directed to the Patent Electronic Business Center (EBC) at 866-217-9197.

This application file is being referred to Technology Center AU 2624 for processing of the request for continuing examination under 37 CFR 1.114 .

Office of Petitions

UNITED STATES PATENT AND TRADEMARK OFFICE

Commissioner for Patents
United States Patent and Trademark Office
P.O. Box 1450
Alexandria, VA 22313-1450
www.uspto.gov

TOMTOM INTERNATIONAL B.V.
REMBRANDTPLEIN 35
AMSTERDAM 1017CT NL NETHERLANDS

MAILED
OCT 01 2010
OFFICE OF PETITIONS

In re Application of	:	
Pieter Geelen	:	
Application No. 11/907,251	:	DECISION ON PETITION
Filed: October 10, 2007	:	
Attorney Docket No. 06P207US15	:	

This is a decision on the petition, filed August 13, 2010, which is being treated as a petition under 37 CFR 1.181 (no fee) requesting withdrawal of the holding of abandonment in the above-identified application.

The petition is **GRANTED**.

This application was held abandoned for failure to reply to the non-final Office action mailed October 15, 2009, which set a one (1) month or thirty(30) day (which ever is longer) shortened statutory period for reply. A Notice of Abandonment was mailed on June 28, 2010.

Petitioner asserts that the Office action dated October 15, 2009 was not received.

A review of the written record indicates no irregularity in the mailing of the Office action, and, in the absence of any irregularity, there is a strong presumption that the Office action was properly mailed to the practitioner at the address of record. This presumption may be overcome by a showing that the Office action was not in fact received. In this regard, the showing required to establish the failure to receive the Office action must consist of the following:

1. a statement from practitioner stating that the Office action was not received by the practitioner;

2. a statement from the practitioner attesting to the fact that a search of the file jacket and docket records indicates that the Office action was not received; and

3. a copy of the docket record where the nonreceived Office action would have been entered had it been received and docketed must be attached to and referenced in the practitioner's statement.

See MPEP § 711.03(c) under subheading "Petition to Withdraw Holding of Abandonment Based on Failure to Receive Office Action," and "Withdrawing the Holding of Abandonment When Office Actions Are Not Received," 1156 Official Gazette 53 (November 16, 1993).

The petition satisfies the above-stated requirements. Accordingly, the application was not abandoned in fact.

In view of the above, the Notice of Abandonment is hereby **vacated** and the holding of abandonment **withdrawn**.

Telephone inquiries concerning this decision should be directed to April M. Wise at 571-272-1642. All other inquiries concerning the examination or status of this application should be directed to the Technology Center.

This application is being referred to the Technology Center technical support staff of Art Unit 3663 for re-mailing the Office action of October 15, 2009. The period for reply will run from the mailing date of the Office action.

/Carl Friedman/
Carl Friedman
Petitions Examiner
Office of Petitions

UNITED STATES PATENT AND TRADEMARK OFFICE

Commissioner for Patents
United States Patent and Trademark Office
P.O. Box 1450
Alexandria, VA 22313-1450
www.uspto.gov

TOMTOM INTERNATIONAL B.V.
REMBRANDTPLEIN 35
AMSTERDAM 1017CT NL NETHERLANDS

MAILED
APR 04 2011
OFFICE OF PETITIONS

In re Application of	:
Riddiford	: DECISION ON PETITION
Application No. 11/907,255	:
Filed: October 10, 2007	:
Atty. Dkt. No.: 159/US	:

This is a decision on the petition under 37 CFR 1.137(b), filed February 24, 2011, to revive the above-identified application.

The petition is hereby **DISMISSED**.

Any request for reconsideration of this decision must be submitted within TWO (2) MONTHS from the mail date of this decision. Extensions of time under 37 CFR 1.136(a) are permitted. The reconsideration request should include a cover letter entitled "Renewed Petition under 37CFR 1.137(b)." This is not a final agency action within the meaning of 5 U.S.C. § 704.

This application became abandoned October 21, 2010 for failure to timely reply to the final Office action mailed July 20, 2010. The final Office action set a three month shortened statutory period of time for reply. A reply was filed August 12, 2010. The reply field August 12, 2010 failed to place the application in condition for allowance, as indicated in the Advisory Action mailed September 2, 2010. No extensions of time in accordance with 37 CFR 1.136(a) were timely requested. Notice of Abandonment was mailed February 15, 2011.

A grantable petition under 37 CFR 1.137(b) must be accompanied by: (1) the required reply, unless previously filed; (2) the petition fee as set forth in 37 CFR 1.17(m); (3) a statement that the entire delay in filing the required reply from the due date for the reply until the filing of a grantable petition pursuant to 37 CFR 1.137(b) was unintentional; and (4) any terminal disclaimer (and fee as set forth in 37 CFR 1.20(d)) required by 37 CFR 1.137(d). Where there is a question as to whether either the abandonment or the delay in filing a petition under 37 CFR 1.137 was unintentional, the Director may require additional information. See MPEP 711.03(c)(II)(C) and (D).

As to item (1), the instant petition is not accompanied by the required reply to the final Office action mailed July 20, 2010. The petition advises that the reply to the final Office action was previously filed on August 12, 2010. However, the examiner of record has indicated that the reply filed August 12, 2010 does not place the application in condition for allowance.

The proposed reply required for consideration of a petition to revive must be a Notice of Appeal (and appeal fee required by 37 CFR 41.20(b)(2)), an amendment that *prima facie* places the application in condition for allowance, a Request for Continued Examination (RCE) and submission (37 CFR 1.114), or the filing of a continuing application under 37 CFR 1.53(b). See MPEP 711.03(c)(III)(A)(2).

Any request for reconsideration of this decision **MUST** include the required reply to the final Office action.
Further correspondence with respect to this matter should be addressed as follows:

By Mail: Mail Stop PETITION
Commissioner for Patents
P. O. Box 1450
Alexandria, VA 22313-1450

By hand: U.S. Patent and Trademark Office
Customer Service Window, Mail Stop Petitions
Randolph Building
401 Dulany Street
Alexandria, VA 22314

By facsimile: **(571) 273-8300**
Attn: Office of Petitions

Telephone inquiries concerning this matter may be directed to the undersigned at (571) 571-3205.

/ALESIA M. BROWN/

Alesia M. Brown
Attorney Advisor
Office of Petitions

UNITED STATES PATENT AND TRADEMARK OFFICE

Commissioner for Patents
United States Patent and Trademark Office
P.O. Box 1450
Alexandria, VA 22313-1450
www.uspto.gov

TOMTOM INTERNATIONAL B.V.
REMBRANDTPLEIN 35
AMSTERDAM 1017CT NL NETHERLANDS

MAILED
JUN 06 2011
OFFICE OF PETITIONS

In re Application of :
Riddiford :
Application No. 11/907,255 : ON PETITION
Filed: October 10, 2007 :
Attorney Docket No. 159/US :

This is a decision on the petition under the unintentional provisions of 37 CFR 1.137(b), filed May 16, 2011, to revive the above-identified application.

The petition is DISMISSED.

Any request for reconsideration of this decision must be submitted within TWO (2) MONTHS from the mail date of this decision. Extensions of time under 37 CFR 1.136(a) are permitted. The reconsideration request should include a cover letter entitled "Renewed Petition under 37 CFR 1.137(b)." This is not a final agency action within the meaning of 5 U.S.C. § 704.

The application became abandoned October 21, 2010 for failure to timely submit a proper reply to the final Office action mailed July 20, 2010. The final Office action set a three month shortened statutory period of time for reply. No extension of time pursuant to 37 CFR 1.136(a) was sought. Notice of Abandonment was mailed February 15, 2011.

A grantable petition under 37 CFR 1.137(b) must be accompanied by: (1) the required reply, unless previously filed; (2) the petition fee as set forth in 37 CFR 1.17(m); (3) a statement that the entire delay in filing the required reply from the due date for the reply until the filing of a grantable petition pursuant to 37 CFR 1.137(b) was unintentional; and (4) any terminal disclaimer (and fee as set forth in 37 CFR 1.20(d)) required by 37 CFR 1.137(d). Where there is a question as to whether either the abandonment or the delay in filing a petition under 37 CFR 1.137 was unintentional, the Director may require additional information. See MPEP 711.03(c)(II)(C) and (D).

The instant petition fails to comply with requirement (1) set forth above. Petitioner submits herewith a request for continued examination pursuant (RCE) to 37 CFR 1.114. The RCE lacks a proper submission. See, 37 CFR 1.114(c). While the RCE asserts that the submission is the renewed petition under 7 CFR 1.137(b), petition is advised that a proper submission in this instance must meet the reply requirements of 37 CFR 1.111.

Any request for reconsideration must include a proper submission with in the meaning of 37 CFR 1.114(c).

Further correspondence with respect to this matter should be addressed as follows:

By Mail: Mail Stop PETITION
Commissioner for Patents
P. O. Box 1450
Alexandria, VA 22313-1450

By hand: U. S. Patent and Trademark Office
Customer Service Window, Mail Stop Petitions
Randolph Building
401 Dulany Street
Alexandria, VA 22314

The centralized facsimile number is (571) 273-8300.

Telephone inquiries concerning this decision should be directed to the undersigned at (571) 272-3205.

/ALESIA M. BROWN/

Alesia M. Brown
Petitions Attorney
Office of Petitions

UNITED STATES PATENT AND TRADEMARK OFFICE

COMMISSIONER FOR PATENTS
UNITED STATES PATENT AND TRADEMARK OFFICE
P.O. BOX 1450
ALEXANDRIA, VA 22313-1450
www.uspto.gov

TOMTOM INTERNATIONAL B.V.
REMBRANDTPLEIN 35
AMSTERDAM 1017CT NL NETHERLANDS

MAILED
JUN 20 2011
OFFICE OF PETITIONS

In re Application of :
Riddiford :
Application No. 11/907,255 :
Filed: October 10, 2007 :
Attorney Docket No. 159/US :

ON PETITION

This is a decision on the renewed petition under the unintentional provisions of 37 CFR 1.137(b), filed June 15, 2011, to revive the above-identified application.

The petition is GRANTED.

The application became abandoned October 21, 2010 for failure to timely submit a proper reply to the final Office action mailed July 20, 2010. The final Office action set a three month shortened statutory period of time for reply. No extension of time pursuant to 37 CFR 1.136(a) was sought. Notice of Abandonment was mailed February 15, 2011.

A grantable petition under 37 CFR 1.137(b) must be accompanied by: (1) the required reply, unless previously filed; (2) the petition fee as set forth in 37 CFR 1.17(m); (3) a statement that the entire delay in filing the required reply from the due date for the reply until the filing of a grantable petition pursuant to 37 CFR 1.137(b) was unintentional; and (4) any terminal disclaimer (and fee as set forth in 37 CFR 1.20(d)) required by 37 CFR 1.137(d). Where there is a question as to whether either the abandonment or the delay in filing a petition under 37 CFR 1.137 was unintentional, the Director may require additional information. See MPEP 711.03(c)(II)(C) and (D).

The instant petition has been carefully reviewed and found in compliance with the provisions set forth above.

Accordingly, this application is being forwarded to Group Art Unit 2835 for further processing.

Telephone inquiries concerning this decision should be directed to the undersigned at (571) 272-3205.

/ALESIA M. BROWN/

Alesia M. Brown
Attorney Advisor
Office of Petitions

UNITED STATES PATENT AND TRADEMARK OFFICE

Commissioner for Patents
United States Patent and Trademark Office
P.O. Box 1450
Alexandria, VA 22313-1450
www.uspto.gov

Mila Shvartsman
P.O. Box 48652
Outremont QC H2V 4T9 CA CANADA

MAILED

AUG 13 2010

OFFICE OF PETITIONS

In re Application of	:	
Raymond Cyr et al.	:	
Application No. 11/907,307	:	DECISION ON PETITION
Filed: October 11, 2007	:	TO WITHDRAW
Attorney Docket No.	:	FROM RECORD
	:	

This is a decision on the Request to Withdraw as attorney or agent of record under 37 C.F.R. § 1.36(b), filed June 25, 2010.

The request is **NOT APPROVED.**

The Office will no longer accept address changes to a new practitioner or law firm filed with a Request, absent the filing of a power of attorney to the new representative. The Office will either change the correspondence address of record to the most current address information provided for the assignee of the entire interest who properly became of record under 37 CFR 3.71 or, if no assignee of the entire interest has properly been made of record under 37 CFR 3.71, the most current address information provided for the first named inventor.

Accordingly, the request to withdraw from record cannot be approved because the request to change the correspondence address is not that of: (1) the first named inventor; or (2) an assignee of the entire interest under 37 C.F.R 3.71.

If an assignee has ownership in this application, then a Statement under 37 CFR 3.73(b) or a copy of the actual assignment must be provided with a renewed request.

All future communications from the Office will continue to be directed to the above-identified address until otherwise properly notified.

Telephone inquiries concerning this decision should be directed to the undersigned at 571-272- 4618.

/Kimberly Inabinet/

Kimberly Inabinet
Petitions Examiner
Office of Petitions

UNITED STATES PATENT AND TRADEMARK OFFICE

Commissioner for Patents
United States Patent and Trademark Office
P.O. Box 1450
Alexandria, VA 22313-1450
www.uspto.gov

NIXON & VANDERHYE, PC
901 NORTH GLEBE ROAD, 11TH FLOOR
ARLINGTON VA 22203

MAILED

OCT 19 2011

OFFICE OF PETITIONS

In re Application of	:	
Ren Sakata	:	
Application No. 11/907,347	:	DECISION GRANTING PETITION
Filed: October 11, 2007	:	UNDER 37 CFR 1.313(c)(2)
Attorney Docket No. MJS-4770-23	:	

This is a decision on the petition under 37 CFR 1.313(c)(2), filed, October 13, 2011 to withdraw the above-identified application from issue after payment of the issue fee.

The petition is **GRANTED**.

The above-identified application is withdrawn from issue for consideration of a submission under 37 CFR 1.114 (request for continued examination). *See* 37 CFR 1.313(c)(2).

Petitioner is advised that the issue fee paid on September 21, 2011 cannot be refunded. If, however, this application is again allowed, petitioner may request that it be applied towards the issue fee required by the new Notice of Allowance.[1]

Telephone inquiries should be directed to Terri Johnson at (571) 272-2991.

This application is being referred to Technology Center AU 2611 for processing of the request for continued examination under 37 CFR 1.114 and for consideration of the concurrently filed information disclosure statement.

/Terri Johnson/
Terri Johnson
Petitions Examiner
Office of Petitions

---

[1] *The request to apply the issue fee to the new Notice may be satisfied by completing and returning the new Part B – Fee(s) Transmittal Form (along with any balance due at the time of submission). Petitioner is advised that the Issue Fee Transmittal Form must be completed and timely submitted to avoid abandonment of the application.*

UNITED STATES PATENT AND TRADEMARK OFFICE

Commissioner for Patents
United States Patent and Trademark Office
P.O. Box 1450
Alexandria, VA 22313-1450
www.uspto.gov

Date : 10/16/2010
Patent No. : 7,795,106 B2
Serial No. : 11/907,348
Inventor(s) : Ohmi et al.
Issued : September 14, 2010
Title : **SEMICONDUCTOR DEVICE FORMED ON (111) SURFACE OF A SI CRYSTAL AND FABRICATION PROCESS THEREOF**
Docket No. : **040258-0362322**

Re: Request for Reconsideration

Consideration has been given your request for the issuance of a certificate of correction for the above-identified patent under the provisions of 37 CFR 1.322 and/or 1.323.

Assignees' names and addresses (assignment data) printed in a patent are based *solely* on information supplied in the appropriate space for identifying the assignment data, i.e., item 3 of the Fee(s) Transmittal Form PTOL-85B. After payment of the issue fee, correction of assignment data submitted on the PTOL-85B can only be done by Certificate of Correction under 37 CFR 1.323, with a request under 37 CFR 3.81(b).

A request for a patent to be corrected to state the name of the assignee must:

A. state that the assignment was submitted for recordation as set forth in 37 CFR 3.11 before issuance of the patent;
B. include a request for a certificate of correction under 37 CFR 1.323 along with the fee set forth in 37 CFR 1.20(a); and
C. include the processing fee set forth in 37 CFR 1.17(i).

If the request is granted, Certificates of Correction Branch will be notified that a Certificate of Correction may be issued.
See Manual of Patent Examining Procedure, Section 1481.01 (Rev. 3) (Oct. 2005).

Applicant has not included items A and or C above, accordingly, the request for Certificate of Correction to add or change the assignee data is dismissed.

Any request under 37 CFR 3.81(b) should be directed to the following address or facsimile number:

By mail:	Mail Stop PETITIONS Commissioner for Patents Post Office Box 1450 Alexandria, VA 22313-1450
By hand:	Customer Service Window Mail Stop Petitions Randolph Building 401 Dulany Street Alexandria, VA 22314
By fax:	571-273-8300 ATTN: Office of Petitions

If a fee (currently $100) was previously submitted for consideration of a Request for Certificate of Correction, under CFR 1.323, to correct assignment data, no additional fee is required.

Ernest C. White, *LIE*
ernest.white@uspto.gov
(571) 272-3385
For Mary F. Diggs (703) 756-1580
Decisions & Certificates
of Correction Branch

PILLSBURY WINTHROP SHAW PITTMAN, LLP
P.O. BOX 10500
MCLEAN VA 22102

ecw

UNITED STATES PATENT AND TRADEMARK OFFICE

UNITED STATES DEPARTMENT OF COMMERCE
United States Patent and Trademark Office
Address: COMMISSIONER FOR PATENTS
P.O. Box 1450
Alexandria, Virginia 22313-1450
www.uspto.gov

APPLICATION NO.	FILING DATE	FIRST NAMED INVENTOR	ATTORNEY DOCKET NO.	CONFIRMATION NO.
11/907,456	10/12/2007	Byeong Moon Jeon	6111-000004/US/DVD	4128

30593 7590 12/10/2010
HARNESS, DICKEY & PIERCE, P.L.C.
P.O. BOX 8910
RESTON, VA 20195

EXAMINER
GE, YUZHEN

ART UNIT	PAPER NUMBER
2624	

MAIL DATE	DELIVERY MODE
12/10/2010	PAPER

Please find below and/or attached an Office communication concerning this application or proceeding.

The time period for reply, if any, is set in the attached communication.

UNITED STATES PATENT AND TRADEMARK OFFICE

Commissioner for Patents
United States Patent and Trademark Office
P.O. Box 1450
Alexandria, VA 22313-1450
www.uspto.gov

MAIL

DEC 1 0 2010

DIRECTOR'S OFFICE
TECHNOLOGY CENTER 2600

HARNESS, DICKEY & PIERCE, P.L.C.
P.O. BOX 8910
RESTON VA 20195

In re Application of
JEON, BYEONG MOON et al :
Application No. 11/907,456 : DECISION ON REQUEST
Filed: October 12, 2007 :
For: **METHOD OF DETERMINING MOTION VECTORS AND A REFERENCE PICTURE INDEX FOR A CURRENT BLOCK IN A PICTURE TO BE DECODED** :

This is a decision on the request for continued suspension of action under 37 C.F.R. § 1.103(a) filed October 13, 2010.

Applicants request a third period of suspension for 6 months. The reason for the request is the Applicants have not received a decision in the appeal for Application No. 11/907,460. As stated in Applicants' previous Petition to Suspend, the art cited against the claims in the subject application is the same as art cited against the claims in Application No. 11/907,460. The claims include at least one feature commensurate in scope with at least one feature claimed in Application No. 11/907,460. Furthermore, this feature forms at least one basis for arguing patentability in the Appeal of Application No. 11/970,460. As such, the outcome of the Appeal in Application No. 11/907,460 may be dispositive of patentability in the subject application.

37 C.F.R. § 1.103 Suspension of action by the Office, states in part:

(a) Suspension for cause. On request of the applicant, the Office may grant a suspension of action by the Office under this paragraph for good and sufficient cause. The Office will not suspend action if a reply by applicant to an Office action is outstanding. Any petition for suspension of action under this paragraph must specify a period of suspension **not exceeding six months**. Any petition for suspension of action under this paragraph must also include:

(1) A showing of good and sufficient cause for suspension of action; and
(2) The fee set forth in § 1.17(h), unless such cause is the fault of the Office. [emphasis added]

709 [R-2] Suspension of Action, states in part:...

Suspension of action under 37 CFR 1.103(a)-(d) at the applicant's request will cause a reduction in patent term adjustment accumulated (if any) under 37 CFR 1.703. The reduction is equal to the number of days beginning on the date a request for suspension of action was filed and ending on the date of the termination of the suspension. See 37 CFR 1.704(c)(1).

Pursuant to applicant's request, suspension on this application is **GRANTED**. Ex parte prosecution is SUSPENDED FOR A PERIOD OF 6 MONTHS. At the end of this period, applicant is required to notify the examiner and request continuance of prosecution or a further suspension. See MPEP § 709.

Mark R. Powell

Mark R. Powell, Director
Technology Center 2600
Communications

UNITED STATES PATENT AND TRADEMARK OFFICE

UNITED STATES DEPARTMENT OF COMMERCE
United States Patent and Trademark Office
Address: COMMISSIONER FOR PATENTS
P.O. Box 1450
Alexandria, Virginia 22313-1450
www.uspto.gov

APPLICATION NO.	FILING DATE	FIRST NAMED INVENTOR	ATTORNEY DOCKET NO.	CONFIRMATION NO.
11/907,456	10/12/2007	Byeong Moon Jeon	6111-000004/US/DVD	4128

30593 7590 06/29/2011
HARNESS, DICKEY & PIERCE, P.L.C.
P.O. BOX 8910
RESTON, VA 20195

EXAMINER
GE, YUZHEN

ART UNIT	PAPER NUMBER
2624	

MAIL DATE	DELIVERY MODE
06/29/2011	PAPER

Please find below and/or attached an Office communication concerning this application or proceeding.

The time period for reply, if any, is set in the attached communication.

UNITED STATES PATENT AND TRADEMARK OFFICE

Commissioner for Patents
United States Patent and Trademark Office
P.O. Box 1450
Alexandria, VA 22313-1450
www.uspto.gov

HARNESS, DICKEY & PIERCE, P.L.C.
P.O. BOX 8910
RESTON VA 20195

In re Application of
JEON, BYEONG MOON et al :
Application No. 11/907,456 : DECISION ON REQUEST
Filed: October 12, 2007 :
For: **METHOD OF DETERMINING MOTION VECTORS AND A REFERENCE PICTURE INDEX FOR A CURRENT BLOCK IN A PICTURE TO BE DECODED** :

This is a decision on the request for continued suspension of action under 37 C.F.R. § 1.103(a) filed June 9, 2011.

Applicants request a fourth period of suspension for 6 months. The reason for the request is the Applicants have not received a decision in the appeal for Application No. 11/907,460. As stated in Applicants' previous Petition to Suspend, the art cited against the claims in the subject application is the same as art cited against the claims in Application No. 11/907,460. The claims include at least one feature commensurate in scope with at least one feature claimed in Application No. 11/907,460. Furthermore, this feature forms at least one basis for arguing patentability in the Appeal of Application No. 11/970,460. As such, the outcome of the Appeal in Application No. 11/907,460 may be dispositive of patentability in the subject application.

37 C.F.R. § 1.103 Suspension of action by the Office, states in part:

(a) Suspension for cause. On request of the applicant, the Office may grant a suspension of action by the Office under this paragraph for good and sufficient cause. The Office will not suspend action if a reply by applicant to an Office action is outstanding. Any petition for suspension of action under this paragraph must specify a period of suspension **not exceeding six months**. Any petition for suspension of action under this paragraph must also include:

(1) A showing of good and sufficient cause for suspension of action; and
(2) The fee set forth in § 1.17(h), unless such cause is the fault of the Office. [emphasis added]

709 [R-2] Suspension of Action, states in part:...

Suspension of action under 37 CFR 1.103(a)-(d) at the applicant's request will cause a reduction in patent term adjustment accumulated (if any) under 37 CFR 1.703. The reduction is equal to the number of days beginning on the date a request for suspension of action was filed and ending on the date of the termination of the suspension. See 37 CFR 1.704(c)(1).

Pursuant to applicant's request, suspension on this application is **GRANTED**. Ex parte prosecution is SUSPENDED FOR A PERIOD OF 6 MONTHS. At the end of this period, applicant is required to notify the examiner and request continuance of prosecution or a further suspension. See MPEP § 709.

Any inquiry regarding this decision should be directed to Wellington Chin, Quality Assurance Specialist, at (571) 272-3134).

John LeGuyader, Director
Technology Center 2600
Communications

UNITED STATES PATENT AND TRADEMARK OFFICE

UNITED STATES DEPARTMENT OF COMMERCE
United States Patent and Trademark Office
Address: COMMISSIONER FOR PATENTS
P.O. Box 1450
Alexandria, Virginia 22313-1450
www.uspto.gov

APPLICATION NO.	FILING DATE	FIRST NAMED INVENTOR	ATTORNEY DOCKET NO.	CONFIRMATION NO.
11/907,456	10/12/2007	Byeong Moon Jeon	6111-000004/US/DVD	4128

30593 7590 01/12/2012
HARNESS, DICKEY & PIERCE, P.L.C.
P.O. BOX 8910
RESTON, VA 20195

EXAMINER
BELLA, MATTHEW C

ART UNIT	PAPER NUMBER
2624	

MAIL DATE	DELIVERY MODE
01/12/2012	PAPER

Please find below and/or attached an Office communication concerning this application or proceeding.

The time period for reply, if any, is set in the attached communication.

UNITED STATES PATENT AND TRADEMARK OFFICE

Commissioner for Patents
United States Patent and Trademark Office
P.O. Box 1450
Alexandria, VA 22313-1450
www.uspto.gov

HARNESS, DICKEY & PIERCE, P.L.C.
P.O. BOX 8910
RESTON VA 20195

In re Application of
JEON, BYEONG MOON et al :
Application No. 11/907,456 : DECISION ON REQUEST
Filed: October 12, 2007 :
For: **METHOD OF DETERMINING MOTION VECTORS AND A REFERENCE PICTURE INDEX FOR A CURRENT BLOCK IN A PICTURE TO BE DECODED** :

This is a decision on the request for continued suspension of action under 37 C.F.R. § 1.103(a) filed December 9, 2011.

Applicants request a fifth period of suspension for 6 months. The reason for the request is the Applicants have not received a decision in the appeal for Application No. 11/907,460. As stated in Applicants' previous Petition to Suspend, the art cited against the claims in the subject application is the same as art cited against the claims in Application No. 11/907,460. The claims include at least one feature commensurate in scope with at least one feature claimed in Application No. 11/907,460. Furthermore, this feature forms at least one basis for arguing patentability in the Appeal of Application No. 11/970,460. As such, the outcome of the Appeal in Application No. 11/907,460 may be dispositive of patentability in the subject application.

37 C.F.R. § 1.103 Suspension of action by the Office, states in part:

(a) Suspension for cause. On request of the applicant, the Office may grant a suspension of action by the Office under this paragraph for good and sufficient cause. The Office will not suspend action if a reply by applicant to an Office action is outstanding. Any petition for suspension of action under this paragraph must specify a period of suspension **not exceeding six months**. Any petition for suspension of action under this paragraph must also include:

(1) A showing of good and sufficient cause for suspension of action; and

(2) The fee set forth in § 1.17(h), unless such cause is the fault of the Office. [emphasis added]

709 [R-2] Suspension of Action, states in part:...

Suspension of action under 37 CFR 1.103(a)-(d) at the applicant's request will cause a reduction in patent term adjustment accumulated (if any) under 37 CFR 1.703. The reduction is equal to the number of days beginning on the date a request for suspension of action was filed and ending on the date of the termination of the suspension. See 37 CFR 1.704(c)(1).

Pursuant to applicant's request, suspension on this application is **GRANTED**. Ex parte prosecution is SUSPENDED FOR A PERIOD OF 6 MONTHS. At the end of this period, applicant is required to notify the examiner and request continuance of prosecution or a further suspension. See MPEP § 709.

Any inquiry regarding this decision should be directed to Wellington Chin, Quality Assurance Specialist, at (571) 272-3134).

John LeGuyader, Director
Technology Center 2600
Communications

UNITED STATES PATENT AND TRADEMARK OFFICE

UNITED STATES DEPARTMENT OF COMMERCE
United States Patent and Trademark Office
Address: COMMISSIONER FOR PATENTS
P.O. Box 1450
Alexandria, Virginia 22313-1450
www.uspto.gov

APPLICATION NO.	FILING DATE	FIRST NAMED INVENTOR	ATTORNEY DOCKET NO.	CONFIRMATION NO.
11/907,457	10/12/2007	Byeong Moon Jeon	6111-000004/US/DVF	4110

30593 7590 12/10/2010
HARNESS, DICKEY & PIERCE, P.L.C.
P.O. BOX 8910
RESTON, VA 20195

EXAMINER
GE, YUZHEN

ART UNIT	PAPER NUMBER
2624	

MAIL DATE	DELIVERY MODE
12/10/2010	PAPER

Please find below and/or attached an Office communication concerning this application or proceeding.

The time period for reply, if any, is set in the attached communication.

UNITED STATES PATENT AND TRADEMARK OFFICE

Commissioner for Patents
United States Patent and Trademark Office
P.O. Box 1450
Alexandria, VA 22313-1450
www.uspto.gov

MAIL

DEC 1 0 2010

DIRECTOR'S OFFICE
TECHNOLOGY CENTER 2600

HARNESS, DICKEY & PIERCE, P.L.C.
P.O. BOX 8910
RESTON VA 20195

In re Application of
JEON, BYEONG MOON et al
Application No. 11/907,457
Filed: October 12, 2007
For: **APPARATUS FOR PREDICTING A MOTION VECTOR FOR A CURRENT BLOCK IN A PICTURE TO BE DECODED**

DECISION ON REQUEST

This is a decision on the request for continued suspension of action under 37 C.F.R. § 1.103(a) filed October 28, 2010.

Applicants request a third period of suspension for 6 months. The reason for the request is the Applicants have not received a decision in the appeal for Application No. 11/907,460 ('460 application). As stated in Applicants' previous Petition to Suspend, the art cited against the claims in the subject application is the same as art cited against the claims in the '460 application. The claims include at least one feature commensurate in scope with at least one feature claimed in the '460 application. Furthermore, this feature forms at least one basis for arguing patentability in the Appeal of the '460 application. As such, the outcome of the Appeal in the '460 application may be dispositive of patentability in the subject application.

37 C.F.R. § 1.103 Suspension of action by the Office, states in part:

(a) Suspension for cause. On request of the applicant, the Office may grant a suspension of action by the Office under this paragraph for good and sufficient cause. The Office will not suspend action if a reply by applicant to an Office action is outstanding. Any petition for suspension of action under this paragraph must specify a period of suspension **not exceeding six months**. Any petition for suspension of action under this paragraph must also include:

(1) A showing of good and sufficient cause for suspension of action; and

(2) The fee set forth in § 1.17(h), unless such cause is the fault of the Office. [emphasis added]

709 [R-2] Suspension of Action, states in part:...

Suspension of action under 37 CFR 1.103(a)-(d) at the applicant's request will cause a reduction in patent term adjustment accumulated (if any) under 37 CFR 1.703. The reduction is equal to the number of days beginning on the date a request for suspension of action was filed and ending on the date of the termination of the suspension. See 37 CFR 1.704(c)(1).

Pursuant to applicant's request, suspension on this application is **GRANTED**. Ex parte prosecution is SUSPENDED FOR A PERIOD OF 6 MONTHS. At the end of this period, applicant is required to notify the examiner and request continuance of prosecution or a further suspension. See MPEP § 709.

Mark R. Powell

Mark R. Powell, Director
Technology Center 2600
Communications

UNITED STATES PATENT AND TRADEMARK OFFICE

UNITED STATES DEPARTMENT OF COMMERCE
United States Patent and Trademark Office
Address: COMMISSIONER FOR PATENTS
P.O. Box 1450
Alexandria, Virginia 22313-1450
www.uspto.gov

APPLICATION NO.	FILING DATE	FIRST NAMED INVENTOR	ATTORNEY DOCKET NO.	CONFIRMATION NO.
11/907,457	10/12/2007	Byeong Moon Jeon	6111-000004/US/DVF	4110

30593 7590 05/17/2011
HARNESS, DICKEY & PIERCE, P.L.C.
P.O. BOX 8910
RESTON, VA 20195

EXAMINER
GE, YUZHEN

ART UNIT	PAPER NUMBER
2624	

MAIL DATE	DELIVERY MODE
05/17/2011	PAPER

Please find below and/or attached an Office communication concerning this application or proceeding.

The time period for reply, if any, is set in the attached communication.

UNITED STATES PATENT AND TRADEMARK OFFICE

Commissioner for Patents
United States Patent and Trademark Office
P.O. Box 1450
Alexandria, VA 22313-1450
www.uspto.gov

HARNESS, DICKEY & PIERCE, P.L.C.
P.O. BOX 8910
RESTON VA 20195

In re Application of
JEON, BYEONG MOON et al :
Application No. 11/907,457 : DECISION ON REQUEST
Filed: October 12, 2007 :
For: **APPARATUS FOR PREDICTING A MOTION VECTOR FOR A CURRENT BLOCK IN A PICTURE TO BE DECODED** :

This is a decision on the request for continued suspension of action under 37 C.F.R. § 1.103(a) filed April 29, 2011.

Applicants request a fourth period of suspension for 6 months. The reason for the request is the Applicants have not received a decision in the appeal for Application No. 11/907,460 ('460 application). As stated in Applicants' previous Petition to Suspend, the art cited against the claims in the subject application is the same as art cited against the claims in the '460 application. The claims include at least one feature commensurate in scope with at least one feature claimed in the '460 application. Furthermore, this feature forms at least one basis for arguing patentability in the Appeal of the '460 application. As such, the outcome of the Appeal in the '460 application may be dispositive of patentability in the subject application.

37 C.F.R. § 1.103 Suspension of action by the Office, states in part:

(a) Suspension for cause. On request of the applicant, the Office may grant a suspension of action by the Office under this paragraph for good and sufficient cause. The Office will not suspend action if a reply by applicant to an Office action is outstanding. Any petition for suspension of action under this paragraph must specify a period of suspension **not exceeding six months**. Any petition for suspension of action under this paragraph must also include:

(1) A showing of good and sufficient cause for suspension of action; and

(2) The fee set forth in § 1.17(h), unless such cause is the fault of the Office. [emphasis added]

709 [R-2] Suspension of Action, states in part:...

Suspension of action under 37 CFR 1.103(a)-(d) at the applicant's request will cause a reduction in patent term adjustment accumulated (if any) under 37 CFR 1.703. The reduction is equal to the number of days beginning on the date a request for suspension of action was filed and ending on the date of the termination of the suspension. See 37 CFR 1.704(c)(1).

Pursuant to applicant's request, suspension on this application is **GRANTED**. Ex parte prosecution is SUSPENDED FOR A PERIOD OF 6 MONTHS. At the end of this period, applicant is required to notify the examiner and request continuance of prosecution or a further suspension. See MPEP § 709.

Any inquiry regarding this decision should be directed to Wellington Chin , Quality Assurance Specialist, at (571) 272-3134).

John LeGuayder, Director
Technology Center 2600
Communications

UNITED STATES PATENT AND TRADEMARK OFFICE

UNITED STATES DEPARTMENT OF COMMERCE
United States Patent and Trademark Office
Address: COMMISSIONER FOR PATENTS
P.O. Box 1450
Alexandria, Virginia 22313-1450
www.uspto.gov

APPLICATION NO.	FILING DATE	FIRST NAMED INVENTOR	ATTORNEY DOCKET NO.	CONFIRMATION NO.
11/907,457	10/12/2007	Byeong Moon Jeon	6111-000004/US/DVF	4110

30593 7590 11/21/2011
HARNESS, DICKEY & PIERCE, P.L.C.
P.O. BOX 8910
RESTON, VA 20195

EXAMINER
GE, YUZHEN

ART UNIT	PAPER NUMBER
2624	

MAIL DATE	DELIVERY MODE
11/21/2011	PAPER

Please find below and/or attached an Office communication concerning this application or proceeding.

The time period for reply, if any, is set in the attached communication.

UNITED STATES PATENT AND TRADEMARK OFFICE

Commissioner for Patents
United States Patent and Trademark Office
P.O. Box 1450
Alexandria, VA 22313-1450
www.uspto.gov

HARNESS, DICKEY & PIERCE, P.L.C.
P.O. BOX 8910
RESTON VA 20195

In re Application of
JEON, BYEONG MOON et al
Application No. 11/907,457
Filed: October 12, 2007
For: **APPARATUS FOR PREDICTING A MOTION VECTOR FOR A CURRENT BLOCK IN A PICTURE TO BE DECODED**

DECISION ON REQUEST

This is a decision on the request for continued suspension of action under 37 C.F.R. § 1.103(a) filed October 31, 2011.

Applicants request a fiftth period of suspension for 6 months. The reason for the request is the Applicants have not received a decision in the appeal for Application No. 11/907,460 ('460 application). As stated in Applicants' previous Petition to Suspend, the art cited against the claims in the subject application is the same as art cited against the claims in the '460 application. The claims include at least one feature commensurate in scope with at least one feature claimed in the '460 application. Furthermore, this feature forms at least one basis for arguing patentability in the Appeal of the '460 application. As such, the outcome of the Appeal in the '460 application may be dispositive of patentability in the subject application.

37 C.F.R. § 1.103 Suspension of action by the Office, states in part:

(a) Suspension for cause. On request of the applicant, the Office may grant a suspension of action by the Office under this paragraph for good and sufficient cause. The Office will not suspend action if a reply by applicant to an Office action is outstanding. Any petition for suspension of action under this paragraph must specify a period of suspension **not exceeding six months**. Any petition for suspension of action under this paragraph must also include:

(1) A showing of good and sufficient cause for suspension of action; and

(2) The fee set forth in § 1.17(h), unless such cause is the fault of the Office. [emphasis added]

709 [R-2] Suspension of Action, states in part:...

Suspension of action under 37 CFR 1.103(a)-(d) at the applicant's request will cause a reduction in patent term adjustment accumulated (if any) under 37 CFR 1.703. The reduction is equal to the number of days beginning on the date a request for suspension of action was filed and ending on the date of the termination of the suspension. See 37 CFR 1.704(c)(1).

Pursuant to applicant's request, suspension on this application is **GRANTED**. Ex parte prosecution is SUSPENDED FOR A PERIOD OF 6 MONTHS. At the end of this period, applicant is required to notify the examiner and request continuance of prosecution or a further suspension. See MPEP § 709.

Any inquiry regarding this decision should be directed to Wellington Chin , Quality Assurance Specialist, at (571) 272-3134).

John LeGuayder, Director
Technology Center 2600
Communications

UNITED STATES PATENT AND TRADEMARK OFFICE

UNITED STATES DEPARTMENT OF COMMERCE
United States Patent and Trademark Office
Address: COMMISSIONER FOR PATENTS
P.O. Box 1450
Alexandria, Virginia 22313-1450
www.uspto.gov

APPLICATION NO.	FILING DATE	FIRST NAMED INVENTOR	ATTORNEY DOCKET NO.	CONFIRMATION NO.
11/907,459	10/12/2007	Byeong Moon Jeon	6111-000004/US/DVE	5071

30593 7590 08/04/2010
HARNESS, DICKEY & PIERCE, P.L.C.
P.O. BOX 8910
RESTON, VA 20195

EXAMINER
GE, YUZHEN

ART UNIT	PAPER NUMBER
2624	

MAIL DATE	DELIVERY MODE
08/04/2010	PAPER

Please find below and/or attached an Office communication concerning this application or proceeding.

The time period for reply, if any, is set in the attached communication.

UNITED STATES PATENT AND TRADEMARK OFFICE

Commissioner for Patents
United States Patent and Trademark Office
P.O. Box 1450
Alexandria, VA 22313-1450
www.uspto.gov

MAIL

AUG 04 2010

DIRECTOR'S OFFICE
TECHNOLOGY CENTER 2600

HARNESS, DICKEY & PIERCE, P.L.C.
P.O. BOX 8910
RESTON VA 20195

In re Application of
JEON, BYEONG MOON et al
Application No. 11/907,459
Filed: October 12, 2007
For: **APPARATUS FOR PREDICTING A MOTION VECTOR FOR A CURRENT BLOCK IN A PICTURE TO BE DECODED**

DECISION ON REQUEST

This is a decision on the request for continued suspension of action under 37 C.F.R. § 1.103(a) filed May 25, 2010.

Applicants request a third period of suspension for 6 months. The reason for the request is the Applicants have not received a decision in the appeal for Application No. 11/907,460 ('460 application). As stated in Applicants' previous Petition to Suspend, the art cited against the claims in the subject application is the same as art cited against the claims in the '460 application. The claims include at least one feature commensurate in scope with at least one feature claimed in the '460 application. Furthermore, this feature forms at least one basis for arguing patentability in the Appeal of the '460 application. As such, the outcome of the Appeal in the '460 application may be dispositive of patentability in the subject application.

37 C.F.R. § 1.103 Suspension of action by the Office, states in part:

(a) Suspension for cause. On request of the applicant, the Office may grant a suspension of action by the Office under this paragraph for good and sufficient cause. The Office will not suspend action if a reply by applicant to an Office action is outstanding. Any petition for suspension of action under this paragraph must specify a period of suspension **not exceeding six months**. Any petition for suspension of action under this paragraph must also include:

(1) A showing of good and sufficient cause for suspension of action; and

(2) The fee set forth in § 1.17(h), unless such cause is the fault of the Office. [emphasis added]

709 [R-2] Suspension of Action, states in part:...

Suspension of action under 37 CFR 1.103(a)-(d) at the applicant's request will cause a reduction in patent term adjustment accumulated (if any) under 37 CFR 1.703. The reduction is equal to the number of days beginning on the date a request for suspension of action was filed and ending on the date of the termination of the suspension. See 37 CFR 1.704(c)(1).

Pursuant to applicant's request, suspension on this application is **GRANTED**. Ex parte prosecution is SUSPENDED FOR A PERIOD OF 6 MONTHS. At the end of this period, applicant is required to notify the examiner and request continuance of prosecution or a further suspension. See MPEP § 709.

Mark R. Powell

Mark R. Powell, Director
Technology Center 2600
Communications

UNITED STATES PATENT AND TRADEMARK OFFICE

UNITED STATES DEPARTMENT OF COMMERCE
United States Patent and Trademark Office
Address: COMMISSIONER FOR PATENTS
P.O. Box 1450
Alexandria, Virginia 22313-1450
www.uspto.gov

APPLICATION NO.	FILING DATE	FIRST NAMED INVENTOR	ATTORNEY DOCKET NO.	CONFIRMATION NO.
11/907,459	10/12/2007	Byeong Moon Jeon	6111-000004/US/DVE	5071

30593 7590 12/20/2010
HARNESS, DICKEY & PIERCE, P.L.C.
P.O. BOX 8910
RESTON, VA 20195

EXAMINER
GE, YUZHEN

ART UNIT	PAPER NUMBER
2624	

MAIL DATE	DELIVERY MODE
12/20/2010	PAPER

Please find below and/or attached an Office communication concerning this application or proceeding.

The time period for reply, if any, is set in the attached communication.

UNITED STATES PATENT AND TRADEMARK OFFICE

Commissioner for Patents
United States Patent and Trademark Office
P.O. Box 1450
Alexandria, VA 22313-1450
www.uspto.gov

MAIL

DEC 17 2010

DIRECTOR'S OFFICE
TECHNOLOGY CENTER 2600

HARNESS, DICKEY & PIERCE, P.L.C.
P.O. BOX 8910
RESTON VA 20195

In re Application of
JEON, BYEONG MOON et al
Application No. 11/907,459
Filed: October 12, 2007
For: **APPARATUS FOR PREDICTING A MOTION VECTOR FOR A CURRENT BLOCK IN A PICTURE TO BE DECODED**

DECISION ON REQUEST

This is a decision on the request for continued suspension of action under 37 C.F.R. § 1.103(a) filed November 18, 2010.

Applicants request a third period of suspension for 6 months. The reason for the request is the Applicants have not received a decision in the appeal for Application No. 11/907,460 ('460 application). As stated in Applicants' previous Petition to Suspend, the art cited against the claims in the subject application is the same as art cited against the claims in the '460 application. The claims include at least one feature commensurate in scope with at least one feature claimed in the '460 application. Furthermore, this feature forms at least one basis for arguing patentability in the Appeal of the '460 application. As such, the outcome of the Appeal in the '460 application may be dispositive of patentability in the subject application.

37 C.F.R. § 1.103 Suspension of action by the Office, states in part:

(a) Suspension for cause. On request of the applicant, the Office may grant a suspension of action by the Office under this paragraph for good and sufficient cause. The Office will not suspend action if a reply by applicant to an Office action is outstanding. Any petition for suspension of action under this paragraph must specify a period of suspension **not exceeding six months**. Any petition for suspension of action under this paragraph must also include:

(1) A showing of good and sufficient cause for suspension of action; and

(2) The fee set forth in § 1.17(h), unless such cause is the fault of the Office. [emphasis added]

709 [R-2] Suspension of Action, states in part:...

Suspension of action under 37 CFR 1.103(a)-(d) at the applicant's request will cause a reduction in patent term adjustment accumulated (if any) under 37 CFR 1.703. The reduction is equal to the number of days beginning on the date a request for suspension of action was filed and ending on the date of the termination of the suspension. See 37 CFR 1.704(c)(1).

Pursuant to applicant's request, suspension on this application is **GRANTED**. Ex parte prosecution is SUSPENDED FOR A PERIOD OF 6 MONTHS. At the end of this period, applicant is required to notify the examiner and request continuance of prosecution or a further suspension. See MPEP § 709.

Mark R. Powell

Mark R. Powell, Director
Technology Center 2600
Communications

UNITED STATES PATENT AND TRADEMARK OFFICE

UNITED STATES DEPARTMENT OF COMMERCE
United States Patent and Trademark Office
Address: COMMISSIONER FOR PATENTS
P.O. Box 1450
Alexandria, Virginia 22313-1450
www.uspto.gov

APPLICATION NO.	FILING DATE	FIRST NAMED INVENTOR	ATTORNEY DOCKET NO.	CONFIRMATION NO.
11/907,459	10/12/2007	Byeong Moon Jeon	6111-000004/US/DVE	5071

30593 7590 06/01/2011
HARNESS, DICKEY & PIERCE, P.L.C.
P.O. BOX 8910
RESTON, VA 20195

EXAMINER
GE, YUZHEN

ART UNIT	PAPER NUMBER
2624	

MAIL DATE	DELIVERY MODE
06/01/2011	PAPER

Please find below and/or attached an Office communication concerning this application or proceeding.

The time period for reply, if any, is set in the attached communication.

UNITED STATES PATENT AND TRADEMARK OFFICE

Commissioner for Patents
United States Patent and Trademark Office
P.O. Box 1450
Alexandria, VA 22313-1450
www.uspto.gov

MAIL

JUN 01 2011
DIRECTOR'S OFFICE
TECHNOLOGY CENTER 2600

HARNESS, DICKEY & PIERCE, P.L.C.
P.O. BOX 8910
RESTON VA 20195

In re Application of
JEON, BYEONG MOON
Application No. 11/907,459
Filed: October 12, 2007
For: **APPARATUS FOR PREDICTING A MOTION VECTOR FOR A CURRENT BLOCK IN A PICTURE TO BE DECODED**

DECISION ON REQUEST

This is a decision on the request for continued suspension of action under 37 C.F.R. § 1.103(a) filed May 18, 2011.

Applicants request a fifth period of suspension for 6 months. The reason for the request is the Applicants have not received a decision in the appeal for Application No. 11/907,460 ('460 application). As stated in Applicants' previous Petition to Suspend, the art cited against the claims in the subject application is the same as art cited against the claims in the '460 application. The claims include at least one feature commensurate in scope with at least one feature claimed in the '460 application. Furthermore, this feature forms at least one basis for arguing patentability in the Appeal of the '460 application. As such, the outcome of the Appeal in the '460 application may be dispositive of patentability in the subject application.

37 C.F.R. § 1.103 Suspension of action by the Office, states in part:

(a) Suspension for cause. On request of the applicant, the Office may grant a suspension of action by the Office under this paragraph for good and sufficient cause. The Office will not suspend action if a reply by applicant to an Office action is outstanding. Any petition for suspension of action under this paragraph must specify a period of suspension **not exceeding six months**. Any petition for suspension of action under this paragraph must also include:

(1) A showing of good and sufficient cause for suspension of action; and

(2) The fee set forth in § 1.17(h), unless such cause is the fault of the Office. [emphasis added]

709 [R-2] Suspension of Action, states in part:...

Suspension of action under 37 CFR 1.103(a)-(d) at the applicant's request will cause a reduction in patent term adjustment accumulated (if any) under 37 CFR 1.703. The reduction is equal to the number of days beginning on the date a request for suspension of action was filed and ending on the date of the termination of the suspension. See 37 CFR 1.704(c)(1).

Pursuant to applicant's request, suspension on this application is **GRANTED**. Ex parte prosecution is SUSPENDED FOR A PERIOD OF 6 MONTHS. At the end of this period, applicant is required to notify the examiner and request continuance of prosecution or a further suspension. See MPEP § 709.

Any inquiry regarding this decision should be directed to Wellington Chin, Quality Assurance Specialist, at (571) 272-3134).

John LeGuyader, Director
Technology Center 2600
Communications

UNITED STATES PATENT AND TRADEMARK OFFICE

UNITED STATES DEPARTMENT OF COMMERCE
United States Patent and Trademark Office
Address: COMMISSIONER FOR PATENTS
P.O. Box 1450
Alexandria, Virginia 22313-1450
www.uspto.gov

APPLICATION NO.	FILING DATE	FIRST NAMED INVENTOR	ATTORNEY DOCKET NO.	CONFIRMATION NO.
11/907,459	10/12/2007	Byeong Moon Jeon	6111-000004/US/DVE	5071

30593 7590 01/09/2012
HARNESS, DICKEY & PIERCE, P.L.C.
P.O. BOX 8910
RESTON, VA 20195

EXAMINER
LEE, JOHN W

ART UNIT	PAPER NUMBER
2624	

MAIL DATE	DELIVERY MODE
01/09/2012	PAPER

Please find below and/or attached an Office communication concerning this application or proceeding.

The time period for reply, if any, is set in the attached communication.

UNITED STATES PATENT AND TRADEMARK OFFICE

Commissioner for Patents
United States Patent and Trademark Office
P.O. Box 1450
Alexandria, VA 22313-1450
www.uspto.gov

HARNESS, DICKEY & PIERCE, P.L.C.
P.O. BOX 8910
RESTON VA 20195

In re Application of
JEON, BYEONG MOON :
Application No. 11/907,459 : DECISION ON REQUEST
Filed: October 12, 2007 :
For: **APPARATUS FOR PREDICTING A MOTION VECTOR FOR A CURRENT BLOCK IN A PICTURE TO BE DECODED** :

This is a decision on the request for continued suspension of action under 37 C.F.R. § 1.103(a) filed November 18, 2011.

Applicants request a sixth period of suspension for 6 months. The reason for the request is the Applicants have not received a decision in the appeal for Application No. 11/907,460 ('460 application). As stated in Applicants' previous Petition to Suspend, the art cited against the claims in the subject application is the same as art cited against the claims in the '460 application. The claims include at least one feature commensurate in scope with at least one feature claimed in the '460 application. Furthermore, this feature forms at least one basis for arguing patentability in the Appeal of the '460 application. As such, the outcome of the Appeal in the '460 application may be dispositive of patentability in the subject application.

37 C.F.R. § 1.103 Suspension of action by the Office, states in part:

(a) Suspension for cause. On request of the applicant, the Office may grant a suspension of action by the Office under this paragraph for good and sufficient cause. The Office will not suspend action if a reply by applicant to an Office action is outstanding. Any petition for suspension of action under this paragraph must specify a period of suspension **not exceeding six months**. Any petition for suspension of action under this paragraph must also include:

(1) A showing of good and sufficient cause for suspension of action; and

(2) The fee set forth in § 1.17(h), unless such cause is the fault of the Office. [emphasis added]

709 [R-2] Suspension of Action, states in part:...

Suspension of action under 37 CFR 1.103(a)-(d) at the applicant's request will cause a reduction in patent term adjustment accumulated (if any) under 37 CFR 1.703. The reduction is equal to the number of days beginning on the date a request for suspension of action was filed and ending on the date of the termination of the suspension. See 37 CFR 1.704(c)(1).

Pursuant to applicant's request, suspension on this application is **GRANTED**. Ex parte prosecution is SUSPENDED FOR A PERIOD OF 6 MONTHS. At the end of this period, applicant is required to notify the examiner and request continuance of prosecution or a further suspension. See MPEP § 709.

Any inquiry regarding this decision should be directed to Wellington Chin, Quality Assurance Specialist, at (571) 272-3134).

John LeGuyader, Director
Technology Center 2600
Communications

UNITED STATES PATENT AND TRADEMARK OFFICE

UNITED STATES DEPARTMENT OF COMMERCE
United States Patent and Trademark Office
Address: COMMISSIONER FOR PATENTS
P.O. Box 1450
Alexandria, Virginia 22313-1450
www.uspto.gov

APPLICATION NO.	FILING DATE	FIRST NAMED INVENTOR	ATTORNEY DOCKET NO.	CONFIRMATION NO.
11/907,461	10/12/2007	Byeong Moon Jeon	6111-000004/US/DVG	5076

30593 7590 12/15/2010
HARNESS, DICKEY & PIERCE, P.L.C.
P.O. BOX 8910
RESTON, VA 20195

EXAMINER
GE, YUZHEN

ART UNIT	PAPER NUMBER
2624	

MAIL DATE	DELIVERY MODE
12/15/2010	PAPER

Please find below and/or attached an Office communication concerning this application or proceeding.

The time period for reply, if any, is set in the attached communication.

UNITED STATES PATENT AND TRADEMARK OFFICE

Commissioner for Patents
United States Patent and Trademark Office
P.O. Box 1450
Alexandria, VA 22313-1450
www.uspto.gov

MAIL

DEC 15 2010

DIRECTOR'S OFFICE
TECHNOLOGY CENTER 2600

HARNESS, DICKEY & PIERCE, P.L.C.
P.O. BOX 8910
RESTON VA 20195

In re Application of
JEON, BYEONG MOON
Application No. 11/907,461
Filed: October 12, 2007
For: **APPARATUS FOR DETERMINING MOTION VECTORS AND A REFERENCE PICTURE INDEX FOR A CURRENT BLOCK IN A PICTURE TO BE DECODED**

DECISION ON REQUEST

This is a decision on the request for continued suspension of action under 37 C.F.R. § 1.103(a) filed October 28, 2010.

Applicants request a fourth period of suspension for 6 months. The reason for the request is the Applicants have not received a decision in the appeal for Application No. 11/907,460 ('460 application). As stated in Applicants' previous Petition to Suspend, the art cited against the claims in the subject application is the same as art cited against the claims in the '460 application. The claims include at least one feature commensurate in scope with at least one feature claimed in the '460 application. Furthermore, this feature forms at least one basis for arguing patentability in the Appeal of the '460 application. As such, the outcome of the Appeal in the '460 application may be dispositive of patentability in the subject application.

37 C.F.R. § 1.103 Suspension of action by the Office, states in part:

(a) Suspension for cause. On request of the applicant, the Office may grant a suspension of action by the Office under this paragraph for good and sufficient cause. The Office will not suspend action if a reply by applicant to an Office action is outstanding. Any petition for suspension of action under this paragraph must specify a period of suspension **not exceeding six months**. Any petition for suspension of action under this paragraph must also include:

(1) A showing of good and sufficient cause for suspension of action; and

(2) The fee set forth in § 1.17(h), unless such cause is the fault of the Office. [emphasis added]

709 [R-2] Suspension of Action, states in part:...

Suspension of action under 37 CFR 1.103(a)-(d) at the applicant's request will cause a reduction in patent term adjustment accumulated (if any) under 37 CFR 1.703. The reduction is equal to the number of days beginning on the date a request for suspension of action was filed and ending on the date of the termination of the suspension. See 37 CFR 1.704(c)(1).

Pursuant to applicant's request, suspension on this application is **GRANTED**. Ex parte prosecution is SUSPENDED FOR A PERIOD OF 6 MONTHS. At the end of this period, applicant is required to notify the examiner and request continuance of prosecution or a further suspension. See MPEP § 709.

Mark R. Powell

Mark R. Powell, Director
Technology Center 2600
Communications

UNITED STATES PATENT AND TRADEMARK OFFICE

UNITED STATES DEPARTMENT OF COMMERCE
United States Patent and Trademark Office
Address: COMMISSIONER FOR PATENTS
P.O. Box 1450
Alexandria, Virginia 22313-1450
www.uspto.gov

APPLICATION NO.	FILING DATE	FIRST NAMED INVENTOR	ATTORNEY DOCKET NO.	CONFIRMATION NO.
11/907,461	10/12/2007	Byeong Moon Jeon	6111-000004/US/DVG	5076

30593 7590 07/29/2011
HARNESS, DICKEY & PIERCE, P.L.C.
P.O. BOX 8910
RESTON, VA 20195

EXAMINER
GE, YUZHEN

ART UNIT	PAPER NUMBER
2624	

MAIL DATE	DELIVERY MODE
07/29/2011	PAPER

Please find below and/or attached an Office communication concerning this application or proceeding.

The time period for reply, if any, is set in the attached communication.

UNITED STATES PATENT AND TRADEMARK OFFICE

Commissioner for Patents
United States Patent and Trademark Office
P.O. Box 1450
Alexandria, VA 22313-1450
www.uspto.gov

MAIL

JUL 29 2011
DIRECTOR'S OFFICE
TECHNOLOGY CENTER 2600

HARNESS, DICKEY & PIERCE, P.L.C.
P.O. BOX 8910
RESTON VA 20195

In re Application of
JEON, BYEONG MOON
Application No. 11/907,461
Filed: October 12, 2007
For: **APPARATUS FOR DETERMINING MOTION VECTORS AND A REFERENCE PICTURE INDEX FOR A CURRENT BLOCK IN A PICTURE TO BE DECODED**

DECISION ON REQUEST

This is a decision on the request for continued suspension of action under 37 C.F.R. § 1.103(a) filed June 15, 2011.

Applicants request a fourth period of suspension for 6 months. The reason for the request is the Applicants have not received a decision in the appeal for Application No. 11/907,460 ('460 application). As stated in Applicants' previous Petition to Suspend, the art cited against the claims in the subject application is the same as art cited against the claims in the '460 application. The claims include at least one feature commensurate in scope with at least one feature claimed in the '460 application. Furthermore, this feature forms at least one basis for arguing patentability in the Appeal of the '460 application. As such, the outcome of the Appeal in the '460 application may be dispositive of patentability in the subject application.

37 C.F.R. § 1.103 Suspension of action by the Office, states in part:

(a) Suspension for cause. On request of the applicant, the Office may grant a suspension of action by the Office under this paragraph for good and sufficient cause. The Office will not suspend action if a reply by applicant to an Office action is outstanding. Any petition for suspension of action under this paragraph must specify a period of suspension **not exceeding six months**. Any petition for suspension of action under this paragraph must also include:

(1) A showing of good and sufficient cause for suspension of action; and

(2) The fee set forth in § 1.17(h), unless such cause is the fault of the Office. [emphasis added]

709 [R-2] Suspension of Action, states in part:...

Suspension of action under 37 CFR 1.103(a)-(d) at the applicant's request will cause a reduction in patent term adjustment accumulated (if any) under 37 CFR 1.703. The reduction is equal to the number of days beginning on the date a request for suspension of action was filed and ending on the date of the termination of the suspension. See 37 CFR 1.704(c)(1).

Pursuant to applicant's request, suspension on this application is **GRANTED**. Ex parte prosecution is SUSPENDED FOR A PERIOD OF 6 MONTHS. At the end of this period, applicant is required to notify the examiner and request continuance of prosecution or a further suspension. See MPEP § 709.

Any inquiry regarding this decision should be directed to Wellington Chin, Quality Assurance Specialist, at (571) 272-3134).

John LeGuyader, Director
Technology Center 2600
Communications

UNITED STATES PATENT AND TRADEMARK OFFICE

UNITED STATES DEPARTMENT OF COMMERCE
United States Patent and Trademark Office
Address: COMMISSIONER FOR PATENTS
P.O. Box 1450
Alexandria, Virginia 22313-1450
www.uspto.gov

APPLICATION NO.	FILING DATE	FIRST NAMED INVENTOR	ATTORNEY DOCKET NO.	CONFIRMATION NO.
11/907,461	10/12/2007	Byeong Moon Jeon	6111-000004/US/DVG	5076

30593 7590 01/06/2012
HARNESS, DICKEY & PIERCE, P.L.C.
P.O. BOX 8910
RESTON, VA 20195

EXAMINER
GE, YUZHEN

ART UNIT	PAPER NUMBER
2624	

MAIL DATE	DELIVERY MODE
01/06/2012	PAPER

Please find below and/or attached an Office communication concerning this application or proceeding.

The time period for reply, if any, is set in the attached communication.

UNITED STATES PATENT AND TRADEMARK OFFICE

Commissioner for Patents
United States Patent and Trademark Office
P.O. Box 1450
Alexandria, VA 22313-1450
www.uspto.gov

HARNESS, DICKEY & PIERCE, P.L.C.
P.O. BOX 8910
RESTON VA 20195

In re Application of
JEON, BYEONG MOON :
Application No. 11/907,461 : DECISION ON REQUEST
Filed: October 12, 2007 :
For: **APPARATUS FOR DETERMINING MOTION VECTORS AND A REFERENCE PICTURE INDEX FOR A CURRENT BLOCK IN A PICTURE TO BE DECODED** :

This is a decision on the request for continued suspension of action under 37 C.F.R. § 1.103(a) filed December 15, 2011.

Applicants request a sixth period of suspension for 6 months. The reason for the request is the Applicants have not received a decision in the appeal for Application No. 11/907,460 ('460 application). As stated in Applicants' previous Petition to Suspend, the art cited against the claims in the subject application is the same as art cited against the claims in the '460 application. The claims include at least one feature commensurate in scope with at least one feature claimed in the '460 application. Furthermore, this feature forms at least one basis for arguing patentability in the Appeal of the '460 application. As such, the outcome of the Appeal in the '460 application may be dispositive of patentability in the subject application.

37 C.F.R. § 1.103 Suspension of action by the Office, states in part:

(a) Suspension for cause. On request of the applicant, the Office may grant a suspension of action by the Office under this paragraph for good and sufficient cause. The Office will not suspend action if a reply by applicant to an Office action is outstanding. Any petition for suspension of action under this paragraph must specify a period of suspension **not exceeding six months**. Any petition for suspension of action under this paragraph must also include:

(1) A showing of good and sufficient cause for suspension of action; and

(2) The fee set forth in § 1.17(h), unless such cause is the fault of the Office. [emphasis added]

709 [R-2] Suspension of Action, states in part:...

Suspension of action under 37 CFR 1.103(a)-(d) at the applicant's request will cause a reduction in patent term adjustment accumulated (if any) under 37 CFR 1.703. The reduction is equal to the number of days beginning on the date a request for suspension of action was filed and ending on the date of the termination of the suspension. See 37 CFR 1.704(c)(1).

Pursuant to applicant's request, suspension on this application is **GRANTED**. Ex parte prosecution is SUSPENDED FOR A PERIOD OF 6 MONTHS. At the end of this period, applicant is required to notify the examiner and request continuance of prosecution or a further suspension. See MPEP § 709.

Any inquiry regarding this decision should be directed to Wellington Chin, Quality Assurance Specialist, at (571) 272-3134).

John LeGuyader, Director
Technology Center 2600
Communications

UNITED STATES PATENT AND TRADEMARK OFFICE

UNITED STATES DEPARTMENT OF COMMERCE
United States Patent and Trademark Office
Address: COMMISSIONER FOR PATENTS
P.O. Box 1450
Alexandria, Virginia 22313-1450
www.uspto.gov

APPLICATION NO.	FILING DATE	FIRST NAMED INVENTOR	ATTORNEY DOCKET NO.	CONFIRMATION NO.
11/907,462	10/12/2007	Byeong Moon Jeon	6111-000004/US/DVC	5078

30593 7590 12/15/2010
HARNESS, DICKEY & PIERCE, P.L.C.
P.O. BOX 8910
RESTON, VA 20195

EXAMINER
GE, YUZHEN

ART UNIT	PAPER NUMBER
2624	

MAIL DATE	DELIVERY MODE
12/15/2010	PAPER

Please find below and/or attached an Office communication concerning this application or proceeding.

The time period for reply, if any, is set in the attached communication.

UNITED STATES PATENT AND TRADEMARK OFFICE

Commissioner for Patents
United States Patent and Trademark Office
P.O. Box 1450
Alexandria, VA 22313-1450
www.uspto.gov

MAIL

DEC 15 2010

DIRECTOR'S OFFICE
TECHNOLOGY CENTER 2600

HARNESS, DICKEY & PIERCE, P.L.C.
P.O. BOX 8910
RESTON VA 20195

In re Application of
JEON, BYEONG MOON et al
Application No. 11/907,462
Filed: October 12, 2007
For: **METHOD OF DETERMINING MOTION VECTORS AND A REFERENCE PICTURE INDEX FOR A CURRENT BLOCK IN A PICTURE TO BE DECODED**

DECISION ON REQUEST

This is a decision on the request for continued suspension of action under 37 C.F.R. § 1.103(a) filed October 13, 2010.

Applicants request a third period of suspension for 6 months. The reason for the request is the Applicants have not received a decision in the appeal for Application No. 11/907,460 ('460 application). As stated in Applicants' previous Petition to Suspend, the art cited against the claims in the subject application is the same as art cited against the claims in Application No. 11/907,460. The claims include at least one feature commensurate in scope with at least one feature claimed in Application No. 11/907,460. Furthermore, this feature forms at least one basis for arguing patentability in the Appeal of Application No. 11/907,460. As such, the outcome of the Appeal in Application No. 11/907,460 may be dispositive of patentability in the subject application.

37 C.F.R. § 1.103 Suspension of action by the Office, states in part:

(a) Suspension for cause. On request of the applicant, the Office may grant a suspension of action by the Office under this paragraph for good and sufficient cause. The Office will not suspend action if a reply by applicant to an Office action is outstanding. Any petition for suspension of action under this paragraph must specify a period of suspension **not exceeding six months**. Any petition for suspension of action under this paragraph must also include:

(1) A showing of good and sufficient cause for suspension of action; and

(2) The fee set forth in § 1.17(h), unless such cause is the fault of the Office. [emphasis added]

709 [R-2] Suspension of Action, states in part:...

Suspension of action under 37 CFR 1.103(a)-(d) at the applicant's request will cause a reduction in patent term adjustment accumulated (if any) under 37 CFR 1.703. The reduction is equal to the number of days beginning on the date a request for suspension of action was filed and ending on the date of the termination of the suspension. See 37 CFR 1.704(c)(1).

Pursuant to applicant's request, suspension on this application is **GRANTED**. Ex parte prosecution is SUSPENDED FOR A PERIOD OF 6 MONTHS. At the end of this period, applicant is required to notify the examiner and request continuance of prosecution or a further suspension. See MPEP § 709.

Mark R. Powell

Mark R. Powell, Director
Technology Center 2600
Communications

UNITED STATES PATENT AND TRADEMARK OFFICE

UNITED STATES DEPARTMENT OF COMMERCE
United States Patent and Trademark Office
Address: COMMISSIONER FOR PATENTS
P.O. Box 1450
Alexandria, Virginia 22313-1450
www.uspto.gov

APPLICATION NO.	FILING DATE	FIRST NAMED INVENTOR	ATTORNEY DOCKET NO.	CONFIRMATION NO.
11/907,462	10/12/2007	Byeong Moon Jeon	6111-000004/US/DVC	5078

30593 7590 05/03/2011
HARNESS, DICKEY & PIERCE, P.L.C.
P.O. BOX 8910
RESTON, VA 20195

EXAMINER
GE, YUZHEN

ART UNIT	PAPER NUMBER
2624	

MAIL DATE	DELIVERY MODE
05/03/2011	PAPER

Please find below and/or attached an Office communication concerning this application or proceeding.

The time period for reply, if any, is set in the attached communication.

UNITED STATES PATENT AND TRADEMARK OFFICE

Commissioner for Patents
United States Patent and Trademark Office
P.O. Box 1450
Alexandria, VA 22313-1450
www.uspto.gov

MAIL

MAY 03 2011
DIRECTOR'S OFFICE
TECHNOLOGY CENTER 2600

HARNESS, DICKEY & PIERCE, P.L.C.
P.O. BOX 8910
RESTON VA 20195

In re Application of
JEON, BYEONG MOON et al
Application No. 11/907,462
Filed: October 12, 2007
For: **METHOD OF DETERMINING MOTION VECTORS AND A REFERENCE PICTURE INDEX FOR A CURRENT BLOCK IN A PICTURE TO BE DECODED**

DECISION ON REQUEST

This is a decision on the request for continued suspension of action under 37 C.F.R. § 1.103(a) filed April 12, 2011.

Applicants request a fourth period of suspension for 6 months. The reason for the request is the Applicants have not received a decision in the appeal for Application No. 11/907,460 ('460 application). As stated in Applicants' previous Petition to Suspend, the art cited against the claims in the subject application is the same as art cited against the claims in Application No. 11/907,460. The claims include at least one feature commensurate in scope with at least one feature claimed in Application No. 11/907,460. Furthermore, this feature forms at least one basis for arguing patentability in the Appeal of Application No. 11/907,460. As such, the outcome of the Appeal in Application No. 11/907,460 may be dispositive of patentability in the subject application.

37 C.F.R. § 1.103 Suspension of action by the Office, states in part:

(a) Suspension for cause. On request of the applicant, the Office may grant a suspension of action by the Office under this paragraph for good and sufficient cause. The Office will not suspend action if a reply by applicant to an Office action is outstanding. Any petition for suspension of action under this paragraph must specify a period of suspension **not exceeding six months**. Any petition for suspension of action under this paragraph must also include:

(1) A showing of good and sufficient cause for suspension of action; and

(2) The fee set forth in § 1.17(h), unless such cause is the fault of the Office. [emphasis added]

709 [R-2] Suspension of Action, states in part:...

Suspension of action under 37 CFR 1.103(a)-(d) at the applicant's request will cause a reduction in patent term adjustment accumulated (if any) under 37 CFR 1.703. The reduction is equal to the number of days beginning on the date a request for suspension of action was filed and ending on the date of the termination of the suspension. See 37 CFR 1.704(c)(1).

Pursuant to applicant's request, suspension on this application is **GRANTED**. Ex parte prosecution is SUSPENDED FOR A PERIOD OF 6 MONTHS. At the end of this period, applicant is required to notify the examiner and request continuance of prosecution or a further suspension. See MPEP § 709.

John LeGuyader, Director
Technology Center 2600
Communications

UNITED STATES PATENT AND TRADEMARK OFFICE

UNITED STATES DEPARTMENT OF COMMERCE
United States Patent and Trademark Office
Address: COMMISSIONER FOR PATENTS
P.O. Box 1450
Alexandria, Virginia 22313-1450
www.uspto.gov

APPLICATION NO.	FILING DATE	FIRST NAMED INVENTOR	ATTORNEY DOCKET NO.	CONFIRMATION NO.
11/907,462	10/12/2007	Byeong Moon Jeon	6111-000004/US/DVC	5078

30593 7590 11/21/2011
HARNESS, DICKEY & PIERCE, P.L.C.
P.O. BOX 8910
RESTON, VA 20195

EXAMINER
BELLA, MATTHEW C

ART UNIT	PAPER NUMBER
2624	

MAIL DATE	DELIVERY MODE
11/21/2011	PAPER

Please find below and/or attached an Office communication concerning this application or proceeding.

The time period for reply, if any, is set in the attached communication.

UNITED STATES PATENT AND TRADEMARK OFFICE

Commissioner for Patents
United States Patent and Trademark Office
P.O. Box 1450
Alexandria, VA 22313-1450
www.uspto.gov

HARNESS, DICKEY & PIERCE, P.L.C.
P.O. BOX 8910
RESTON VA 20195

In re Application of
JEON, BYEONG MOON et al :
Application No. 11/907,462 : DECISION ON REQUEST
Filed: October 12, 2007 :
For: **METHOD OF DETERMINING MOTION VECTORS AND A REFERENCE PICTURE INDEX FOR A CURRENT BLOCK IN A PICTURE TO BE DECODED** :

This is a decision on the request for continued suspension of action under 37 C.F.R. § 1.103(a) filed October 12, 2011.

Applicants request a fifth period of suspension for 6 months. The reason for the request is the Applicants have not received a decision in the appeal for Application No. 11/907,460 ('460 application). As stated in Applicants' previous Petition to Suspend, the art cited against the claims in the subject application is the same as art cited against the claims in Application No. 11/907,460. The claims include at least one feature commensurate in scope with at least one feature claimed in Application No. 11/907,460. Furthermore, this feature forms at least one basis for arguing patentability in the Appeal of Application No. 11/907,460. As such, the outcome of the Appeal in Application No. 11/907,460 may be dispositive of patentability in the subject application.

37 C.F.R. § 1.103 Suspension of action by the Office, states in part:

(a) Suspension for cause. On request of the applicant, the Office may grant a suspension of action by the Office under this paragraph for good and sufficient cause. The Office will not suspend action if a reply by applicant to an Office action is outstanding. Any petition for suspension of action under this paragraph must specify a period of suspension **not exceeding six months**. Any petition for suspension of action under this paragraph must also include:

(1) A showing of good and sufficient cause for suspension of action; and

(2) The fee set forth in § 1.17(h), unless such cause is the fault of the Office. [emphasis added]

709 [R-2] Suspension of Action, states in part:...

Suspension of action under 37 CFR 1.103(a)-(d) at the applicant's request will cause a reduction in patent term adjustment accumulated (if any) under 37 CFR 1.703. The reduction is equal to the number of days beginning on the date a request for suspension of action was filed and ending on the date of the termination of the suspension. See 37 CFR 1.704(c)(1).

Pursuant to applicant's request, suspension on this application is **GRANTED**. Ex parte prosecution is SUSPENDED FOR A PERIOD OF 6 MONTHS. At the end of this period, applicant is required to notify the examiner and request continuance of prosecution or a further suspension. See MPEP § 709.

Any inquiry regarding this decision should be directed to Wellington Chin, Quality Assurance Specialist, at (571) 272-3134).

John LeGuyader, Director
Technology Center 2600
Communications

UNITED STATES PATENT AND TRADEMARK OFFICE

UNITED STATES DEPARTMENT OF COMMERCE
United States Patent and Trademark Office
Address: COMMISSIONER FOR PATENTS
P.O. Box 1450
Alexandria, Virginia 22313-1450
www.uspto.gov

APPLICATION NO.	FILING DATE	FIRST NAMED INVENTOR	ATTORNEY DOCKET NO.	CONFIRMATION NO.
11/907,463	10/12/2007	Byeong Moon Jeon	6111-000004/US/DVB	5072

30593 7590 08/04/2010
HARNESS, DICKEY & PIERCE, P.L.C.
P.O. BOX 8910
RESTON, VA 20195

EXAMINER
GE, YUZHEN

ART UNIT	PAPER NUMBER
2624	

MAIL DATE	DELIVERY MODE
08/04/2010	PAPER

Please find below and/or attached an Office communication concerning this application or proceeding.

The time period for reply, if any, is set in the attached communication.

UNITED STATES PATENT AND TRADEMARK OFFICE

Commissioner for Patents
United States Patent and Trademark Office
P.O. Box 1450
Alexandria, VA 22313-1450
www.uspto.gov

MAIL

AUG 04 2010
DIRECTOR'S OFFICE
TECHNOLOGY CENTER 2600

HARNESS, DICKEY & PIERCE, P.L.C.
P.O. BOX 8910
RESTON VA 20195

In re Application of
JEON, BYEONG MOON et al
Application No. 11/907,463
Filed: October 12, 2007
For: **METHOD OF DETERMINING MOTION VECTORS AND A REFERENCE PICTURE INDEX FOR A CURRENT BLOCK IN A PICTURE TO BE DECODED**

DECISION ON REQUEST

This is a decision on the request for continued suspension of action under 37 C.F.R. § 1.103(a) filed June 28, 2010.

Applicants request a third period of suspension for 6 months. The reason for the request is the Applicants have not received a decision in the appeal for Application No. 11/907,460 ('460 application). As stated in Applicants' previous Petition to Suspend, the art cited against the claims in the subject application is the same as art cited against the claims in the '460 application. The claims include at least one feature commensurate in scope with at least one feature claimed in the '460 application. Furthermore, this feature forms at least one basis for arguing patentability in the Appeal of the '460 application. As such, the outcome of the Appeal in the '460 application may be dispositive of patentability in the subject application.

37 C.F.R. § 1.103 Suspension of action by the Office, states in part:

(a) Suspension for cause. On request of the applicant, the Office may grant a suspension of action by the Office under this paragraph for good and sufficient cause. The Office will not suspend action if a reply by applicant to an Office action is outstanding. Any petition for suspension of action under this paragraph must specify a period of suspension **not exceeding six months**. Any petition for suspension of action under this paragraph must also include:

(1) A showing of good and sufficient cause for suspension of action; and
(2) The fee set forth in § 1.17(h), unless such cause is the fault of the Office. [emphasis added]

709 [R-2] Suspension of Action, states in part:...

Suspension of action under 37 CFR 1.103(a)-(d) at the applicant's request will cause a reduction in patent term adjustment accumulated (if any) under 37 CFR 1.703. The reduction is equal to the number of days beginning on the date a request for suspension of action was filed and ending on the date of the termination of the suspension. See 37 CFR 1.704(c)(1).

Pursuant to applicant's request, suspension on this application is **GRANTED**. Ex parte prosecution is SUSPENDED FOR A PERIOD OF 6 MONTHS. At the end of this period, applicant is required to notify the examiner and request continuance of prosecution or a further suspension. See MPEP § 709.

Mark R. Powell

Mark R. Powell, Director
Technology Center 2600
Communications

UNITED STATES PATENT AND TRADEMARK OFFICE

UNITED STATES DEPARTMENT OF COMMERCE
United States Patent and Trademark Office
Address: COMMISSIONER FOR PATENTS
P.O. Box 1450
Alexandria, Virginia 22313-1450
www.uspto.gov

APPLICATION NO.	FILING DATE	FIRST NAMED INVENTOR	ATTORNEY DOCKET NO.	CONFIRMATION NO.
11/907,463	10/12/2007	Byeong Moon Jeon	6111-000004/US/DVB	5072

30593 7590 02/09/2011
HARNESS, DICKEY & PIERCE, P.L.C.
P.O. BOX 8910
RESTON, VA 20195

EXAMINER
GE, YUZHEN

ART UNIT	PAPER NUMBER
2624	

MAIL DATE	DELIVERY MODE
02/09/2011	PAPER

Please find below and/or attached an Office communication concerning this application or proceeding.

The time period for reply, if any, is set in the attached communication.

UNITED STATES PATENT AND TRADEMARK OFFICE

Commissioner for Patents
United States Patent and Trademark Office
P.O. Box 1450
Alexandria, VA 22313-1450
www.uspto.gov

MAIL

FEB 09 2011

DIRECTOR'S OFFICE
TECHNOLOGY CENTER 2600

HARNESS, DICKEY & PIERCE, P.L.C.
P.O. BOX 8910
RESTON VA 20195

In re Application of
JEON, BYEONG MOON et al
Application No. 11/907,463
Filed: October 12, 2007
For: **METHOD OF DETERMINING MOTION VECTORS AND A REFERENCE PICTURE INDEX FOR A CURRENT BLOCK IN A PICTURE TO BE DECODED**

DECISION ON REQUEST

This is a decision on the request for continued suspension of action under 37 C.F.R. § 1.103(a) filed December 22, 2010.

Applicants request a fourth period of suspension for 6 months. The reason for the request is the Applicants have not received a decision in the appeal for Application No. 11/907,460 ('460 application). As stated in Applicants' previous Petition to Suspend, the art cited against the claims in the subject application is the same as art cited against the claims in the '460 application. The claims include at least one feature commensurate in scope with at least one feature claimed in the '460 application. Furthermore, this feature forms at least one basis for arguing patentability in the Appeal of the '460 application. As such, the outcome of the Appeal in the '460 application may be dispositive of patentability in the subject application.

37 C.F.R. § 1.103 Suspension of action by the Office, states in part:

(a) Suspension for cause. On request of the applicant, the Office may grant a suspension of action by the Office under this paragraph for good and sufficient cause. The Office will not suspend action if a reply by applicant to an Office action is outstanding. Any petition for suspension of action under this paragraph must specify a period of suspension **not exceeding six months**. Any petition for suspension of action under this paragraph must also include:

(1) A showing of good and sufficient cause for suspension of action; and

(2) The fee set forth in § 1.17(h), unless such cause is the fault of the Office. [emphasis added]

709 [R-2] Suspension of Action, states in part:...

Suspension of action under 37 CFR 1.103(a)-(d) at the applicant's request will cause a reduction in patent term adjustment accumulated (if any) under 37 CFR 1.703. The reduction is equal to the number of days beginning on the date a request for suspension of action was filed and ending on the date of the termination of the suspension. See 37 CFR 1.704(c)(1).

Pursuant to applicant's request, suspension on this application is **GRANTED**. Ex parte prosecution is SUSPENDED FOR A PERIOD OF 6 MONTHS. At the end of this period, applicant is required to notify the examiner and request continuance of prosecution or a further suspension. See MPEP § 709.

Mark R. Powell

Mark R. Powell, Director
Technology Center 2600
Communications

UNITED STATES PATENT AND TRADEMARK OFFICE

UNITED STATES DEPARTMENT OF COMMERCE
United States Patent and Trademark Office
Address: COMMISSIONER FOR PATENTS
P.O. Box 1450
Alexandria, Virginia 22313-1450
www.uspto.gov

APPLICATION NO.	FILING DATE	FIRST NAMED INVENTOR	ATTORNEY DOCKET NO.	CONFIRMATION NO.
11/907,463	10/12/2007	Byeong Moon Jeon	6111-000004/US/DVB	5072

30593 7590 09/15/2011
HARNESS, DICKEY & PIERCE, P.L.C.
P.O. BOX 8910
RESTON, VA 20195

EXAMINER
GE, YUZHEN

ART UNIT	PAPER NUMBER
2624	

MAIL DATE	DELIVERY MODE
09/15/2011	PAPER

Please find below and/or attached an Office communication concerning this application or proceeding.

The time period for reply, if any, is set in the attached communication.

UNITED STATES PATENT AND TRADEMARK OFFICE

Commissioner for Patents
United States Patent and Trademark Office
P.O. Box 1450
Alexandria, VA 22313-1450
www.uspto.gov

MAIL

SEP 14 20
DIRECTOR'S OFF
TECHNOLOGY CENTER

MAIL

SEP 14 2011
DIRECTOR'S OFFICE
TECHNOLOGY CENTER 2600

HARNESS, DICKEY & PIERCE, P.L.C.
P.O. BOX 8910
RESTON VA 20195

In re Application of
JEON, BYEONG MOON et al
Application No. 11/907,463
Filed: October 12, 2007
For: **METHOD OF DETERMINING MOTION VECTORS AND A REFERENCE PICTURE INDEX FOR A CURRENT BLOCK IN A PICTURE TO BE DECODED**

DECISION ON REQUEST

This is a decision on the request for continued suspension of action under 37 C.F.R. § 1.103(a) filed June 22, 2011.

Applicants request a fifth period of suspension for 6 months. The reason for the request is the Applicants have not received a decision in the appeal for Application No. 11/907,460 ('460 application). As stated in Applicants' previous Petition to Suspend, the art cited against the claims in the subject application is the same as art cited against the claims in the '460 application. The claims include at least one feature commensurate in scope with at least one feature claimed in the '460 application. Furthermore, this feature forms at least one basis for arguing patentability in the Appeal of the '460 application. As such, the outcome of the Appeal in the '460 application may be dispositive of patentability in the subject application.

37 C.F.R. § 1.103 Suspension of action by the Office, states in part:

(a) Suspension for cause. On request of the applicant, the Office may grant a suspension of action by the Office under this paragraph for good and sufficient cause. The Office will not suspend action if a reply by applicant to an Office action is outstanding. Any petition for suspension of action under this paragraph must specify a period of suspension **not exceeding six months**. Any petition for suspension of action under this paragraph must also include:

(1) A showing of good and sufficient cause for suspension of action; and

(2) The fee set forth in § 1.17(h), unless such cause is the fault of the Office. [emphasis added]

709 [R-2] Suspension of Action, states in part:...

Suspension of action under 37 CFR 1.103(a)-(d) at the applicant's request will cause a reduction in patent term adjustment accumulated (if any) under 37 CFR 1.703. The reduction is equal to the number of days beginning on the date a request for suspension of action was filed and ending on the date of the termination of the suspension. See 37 CFR 1.704(c)(1).

Pursuant to applicant's request, suspension on this application is **GRANTED**. Ex parte prosecution is SUSPENDED FOR A PERIOD OF 6 MONTHS. At the end of this period, applicant is required to notify the examiner and request continuance of prosecution or a further suspension. See MPEP § 709.

Any inquiry regarding this decision should be directed to Wellington Chin, Quality Assurance Specialist, at (571) 272-3134).

John LeGuyader, Director
Technology Center 2600
Communications

UNITED STATES PATENT AND TRADEMARK OFFICE

UNITED STATES DEPARTMENT OF COMMERCE
United States Patent and Trademark Office
Address: COMMISSIONER FOR PATENTS
P.O. Box 1450
Alexandria, Virginia 22313-1450
www.uspto.gov

APPLICATION NO.	FILING DATE	FIRST NAMED INVENTOR	ATTORNEY DOCKET NO.	CONFIRMATION NO.
11/907,463	10/12/2007	Byeong Moon Jeon	6111-000004/US/DVB	5072

30593 7590 01/09/2012
HARNESS, DICKEY & PIERCE, P.L.C.
P.O. BOX 8910
RESTON, VA 20195

EXAMINER
GE, YUZHEN

ART UNIT	PAPER NUMBER
2624	

MAIL DATE	DELIVERY MODE
01/09/2012	PAPER

Please find below and/or attached an Office communication concerning this application or proceeding.

The time period for reply, if any, is set in the attached communication.

UNITED STATES PATENT AND TRADEMARK OFFICE

Commissioner for Patents
United States Patent and Trademark Office
P.O. Box 1450
Alexandria, VA 22313-1450
www.uspto.gov

HARNESS, DICKEY & PIERCE, P.L.C.
P.O. BOX 8910
RESTON VA 20195

In re Application of
JEON, BYEONG MOON et al :
Application No. 11/907,463 : DECISION ON REQUEST
Filed: October 12, 2007 :
For: **METHOD OF DETERMINING MOTION VECTORS AND A REFERENCE PICTURE INDEX FOR A CURRENT BLOCK IN A PICTURE TO BE DECODED** :

This is a decision on the request for continued suspension of action under 37 C.F.R. § 1.103(a) filed December 22, 2011.

Applicants request a sixth period of suspension for 6 months. The reason for the request is the Applicants have not received a decision in the appeal for Application No. 11/907,460 ('460 application). As stated in Applicants' previous Petition to Suspend, the art cited against the claims in the subject application is the same as art cited against the claims in the '460 application. The claims include at least one feature commensurate in scope with at least one feature claimed in the '460 application. Furthermore, this feature forms at least one basis for arguing patentability in the Appeal of the '460 application. As such, the outcome of the Appeal in the '460 application may be dispositive of patentability in the subject application.

37 C.F.R. § 1.103 Suspension of action by the Office, states in part:

(a) Suspension for cause. On request of the applicant, the Office may grant a suspension of action by the Office under this paragraph for good and sufficient cause. The Office will not suspend action if a reply by applicant to an Office action is outstanding. Any petition for suspension of action under this paragraph must specify a period of suspension **not exceeding six months**. Any petition for suspension of action under this paragraph must also include:

(1) A showing of good and sufficient cause for suspension of action; and

(2) The fee set forth in § 1.17(h), unless such cause is the fault of the Office. [emphasis added]

709 [R-2] Suspension of Action, states in part:...

Suspension of action under 37 CFR 1.103(a)-(d) at the applicant's request will cause a reduction in patent term adjustment accumulated (if any) under 37 CFR 1.703. The reduction is equal to the number of days beginning on the date a request for suspension of action was filed and ending on the date of the termination of the suspension. See 37 CFR 1.704(c)(1).

Pursuant to applicant's request, suspension on this application is **GRANTED**. Ex parte prosecution is SUSPENDED FOR A PERIOD OF 6 MONTHS. At the end of this period, applicant is required to notify the examiner and request continuance of prosecution or a further suspension. See MPEP § 709.

Any inquiry regarding this decision should be directed to Wellington Chin, Quality Assurance Specialist, at (571) 272-3134).

John LeGuyader, Director
Technology Center 2600
Communications

UNITED STATES PATENT AND TRADEMARK OFFICE

UNITED STATES DEPARTMENT OF COMMERCE
United States Patent and Trademark Office
Address: COMMISSIONER FOR PATENTS
P.O. Box 1450
Alexandria, Virginia 22313-1450
www.uspto.gov

APPLICATION NO.	FILING DATE	FIRST NAMED INVENTOR	ATTORNEY DOCKET NO.	CONFIRMATION NO.
11/907,465	10/12/2007	Byeong Moon Jeon	6111-000004/US/DVI	5079

30593 7590 12/20/2010
HARNESS, DICKEY & PIERCE, P.L.C.
P.O. BOX 8910
RESTON, VA 20195

EXAMINER
GE, YUZHEN

ART UNIT	PAPER NUMBER
2624	

MAIL DATE	DELIVERY MODE
12/20/2010	PAPER

Please find below and/or attached an Office communication concerning this application or proceeding.

The time period for reply, if any, is set in the attached communication.

UNITED STATES PATENT AND TRADEMARK OFFICE

Commissioner for Patents
United States Patent and Trademark Office
P.O. Box 1450
Alexandria, VA 22313-1450
www.uspto.gov

MAIL

DEC 2 0 2010

DIRECTOR'S OFFICE
TECHNOLOGY CENTER 2600

HARNESS, DICKEY & PIERCE, P.L.C.
P.O. BOX 8910
RESTON VA 20195

In re Application of
JEON, BYEONG MOON et al :
Application No. 11/907,465 : DECISION ON REQUEST
Filed: October 12, 2007 :
For: **APPARATUS FOR DETERMINING MOTION VECTORS AND A REFERENCE PICTURE INDEX FOR A CURRENT BLOCK IN A PICTURE TO BE DECODED** :

This is a decision on the request for continued suspension of action under 37 C.F.R. § 1.103(a) filed November 12, 2010.

Applicants request a fourth period of suspension for 6 months. The reason for the request is the Applicants have not received a decision in the appeal for Application No. 11/907,460 ('460 application). As stated in Applicants' previous Petition to Suspend, the art cited against the claims in the subject application is the same as art cited against the claims in the '460 application. The claims include at least one feature commensurate in scope with at least one feature claimed in the '460 application. Furthermore, this feature forms at least one basis for arguing patentability in the Appeal of the '460 application. As such, the outcome of the Appeal in the '460 application may be dispositive of patentability in the subject application.

37 C.F.R. § 1.103 Suspension of action by the Office, states in part:

(a) Suspension for cause. On request of the applicant, the Office may grant a suspension of action by the Office under this paragraph for good and sufficient cause. The Office will not suspend action if a reply by applicant to an Office action is outstanding. Any petition for suspension of action under this paragraph must specify a period of suspension **not exceeding six months**. Any petition for suspension of action under this paragraph must also include:

(1) A showing of good and sufficient cause for suspension of action; and
(2) The fee set forth in § 1.17(h), unless such cause is the fault of the Office. [emphasis added]

709 [R-2] Suspension of Action, states in part:...

Suspension of action under 37 CFR 1.103(a)-(d) at the applicant's request will cause a reduction in patent term adjustment accumulated (if any) under 37 CFR 1.703. The reduction is equal to the number of days beginning on the date a request for suspension of action was filed and ending on the date of the termination of the suspension. See 37 CFR 1.704(c)(1).

Pursuant to applicant's request, suspension on this application is **GRANTED**. Ex parte prosecution is SUSPENDED FOR A PERIOD OF 6 MONTHS. At the end of this period, applicant is required to notify the examiner and request continuance of prosecution or a further suspension. See MPEP § 709.

Mark R. Powell

Mark R. Powell, Director
Technology Center 2600
Communications

UNITED STATES PATENT AND TRADEMARK OFFICE

UNITED STATES DEPARTMENT OF COMME
United States Patent and Trademark Office
Address: COMMISSIONER FOR PATENTS
P.O. Box 1450
Alexandria, Virginia 22313-1450
www.uspto.gov

APPLICATION NO.	FILING DATE	FIRST NAMED INVENTOR	ATTORNEY DOCKET NO.	CONFIRMATION NO.
11/907,465	10/12/2007	Byeong Moon Jeon	6111-000004/US/DVI	5079

30593 7590 05/17/2011
HARNESS, DICKEY & PIERCE, P.L.C.
P.O. BOX 8910
RESTON, VA 20195

EXAMINER
GE, YUZHEN

ART UNIT	PAPER NUMBER
2624	

MAIL DATE	DELIVERY MODE
05/17/2011	PAPER

Please find below and/or attached an Office communication concerning this application or proceeding.

The time period for reply, if any, is set in the attached communication.

UNITED STATES PATENT AND TRADEMARK OFFICE

Commissioner for Patents
United States Patent and Trademark Office
P.O. Box 1450
Alexandria, VA 22313-1450
www.uspto.gov

MAIL

MAY 17 2011
DIRECTOR'S OFFICE
TECHNOLOGY CENTER 2600

HARNESS, DICKEY & PIERCE, P.L.C.
P.O. BOX 8910
RESTON VA 20195

In re Application of
JEON, BYEONG MOON et al
Application No. 11/907,465
Filed: October 12, 2007
For: **APPARATUS FOR DETERMINING MOTION VECTORS AND A REFERENCE PICTURE INDEX FOR A CURRENT BLOCK IN A PICTURE TO BE DECODED**

DECISION ON REQUEST

This is a decision on the request for continued suspension of action under 37 C.F.R. § 1.103(a) filed May 12, 2011.

Applicants request a fifth period of suspension for 6 months. The reason for the request is the Applicants have not received a decision in the appeal for Application No. 11/907,460 ('460 application). As stated in Applicants' previous Petition to Suspend, the art cited against the claims in the subject application is the same as art cited against the claims in the '460 application. The claims include at least one feature commensurate in scope with at least one feature claimed in the '460 application. Furthermore, this feature forms at least one basis for arguing patentability in the Appeal of the '460 application. As such, the outcome of the Appeal in the '460 application may be dispositive of patentability in the subject application.

37 C.F.R. § 1.103 Suspension of action by the Office, states in part:

(a) Suspension for cause. On request of the applicant, the Office may grant a suspension of action by the Office under this paragraph for good and sufficient cause. The Office will not suspend action if a reply by applicant to an Office action is outstanding. Any petition for suspension of action under this paragraph must specify a period of suspension **not exceeding six months**. Any petition for suspension of action under this paragraph must also include:

(1) A showing of good and sufficient cause for suspension of action; and

(2) The fee set forth in § 1.17(h), unless such cause is the fault of the Office. [emphasis added]

709 [R-2] Suspension of Action, states in part:...

Suspension of action under 37 CFR 1.103(a)-(d) at the applicant's request will cause a reduction in patent term adjustment accumulated (if any) under 37 CFR 1.703. The reduction is equal to the number of days beginning on the date a request for suspension of action was filed and ending on the date of the termination of the suspension. See 37 CFR 1.704(c)(1).

Pursuant to applicant's request, suspension on this application is **GRANTED**. Ex parte prosecution is SUSPENDED FOR A PERIOD OF 6 MONTHS. At the end of this period, applicant is required to notify the examiner and request continuance of prosecution or a further suspension. See MPEP § 709.

Any inquiry regarding this decision should be directed to Wellington Chin, Quality Assurance Specialist, at (571) 272-3134).

John Leguyader, Director
Technology Center 2600
Communications

UNITED STATES PATENT AND TRADEMARK OFFICE

UNITED STATES DEPARTMENT OF COMMERCE
United States Patent and Trademark Office
Address: COMMISSIONER FOR PATENTS
P.O. Box 1450
Alexandria, Virginia 22313-1450
www.uspto.gov

APPLICATION NO.	FILING DATE	FIRST NAMED INVENTOR	ATTORNEY DOCKET NO.	CONFIRMATION NO.
11/907,465	10/12/2007	Byeong Moon Jeon	6111-000004/US/DVI	5079

30593 7590 01/09/2012
HARNESS, DICKEY & PIERCE, P.L.C.
P.O. BOX 8910
RESTON, VA 20195

EXAMINER
LEE, JOHN W

ART UNIT	PAPER NUMBER
2624	

MAIL DATE	DELIVERY MODE
01/09/2012	PAPER

Please find below and/or attached an Office communication concerning this application or proceeding.

The time period for reply, if any, is set in the attached communication.

UNITED STATES PATENT AND TRADEMARK OFFICE

Commissioner for Patents
United States Patent and Trademark Office
P.O. Box 1450
Alexandria, VA 22313-1450
www.uspto.gov

HARNESS, DICKEY & PIERCE, P.L.C.
P.O. BOX 8910
RESTON VA 20195

In re Application of
JEON, BYEONG MOON et al
Application No. 11/907,465
Filed: October 12, 2007
For: **APPARATUS FOR DETERMINING MOTION VECTORS AND A REFERENCE PICTURE INDEX FOR A CURRENT BLOCK IN A PICTURE TO BE DECODED**

DECISION ON REQUEST

This is a decision on the request for continued suspension of action under 37 C.F.R. § 1.103(a) filed November 14, 2011.

Applicants request a sixth period of suspension for 6 months. The reason for the request is the Applicants have not received a decision in the appeal for Application No. 11/907,460 ('460 application). As stated in Applicants' previous Petition to Suspend, the art cited against the claims in the subject application is the same as art cited against the claims in the '460 application. The claims include at least one feature commensurate in scope with at least one feature claimed in the '460 application. Furthermore, this feature forms at least one basis for arguing patentability in the Appeal of the '460 application. As such, the outcome of the Appeal in the '460 application may be dispositive of patentability in the subject application.

37 C.F.R. § 1.103 Suspension of action by the Office, states in part:

(a) Suspension for cause. On request of the applicant, the Office may grant a suspension of action by the Office under this paragraph for good and sufficient cause. The Office will not suspend action if a reply by applicant to an Office action is outstanding. Any petition for suspension of action under this paragraph must specify a period of suspension **not exceeding six months**. Any petition for suspension of action under this paragraph must also include:

(1) A showing of good and sufficient cause for suspension of action; and

(2) The fee set forth in § 1.17(h), unless such cause is the fault of the Office. [emphasis added]

709 [R-2] Suspension of Action, states in part:...

Suspension of action under 37 CFR 1.103(a)-(d) at the applicant's request will cause a reduction in patent term adjustment accumulated (if any) under 37 CFR 1.703. The reduction is equal to the number of days beginning on the date a request for suspension of action was filed and ending on the date of the termination of the suspension. See 37 CFR 1.704(c)(1).

Pursuant to applicant's request, suspension on this application is **GRANTED**. Ex parte prosecution is SUSPENDED FOR A PERIOD OF 6 MONTHS. At the end of this period, applicant is required to notify the examiner and request continuance of prosecution or a further suspension. See MPEP § 709.

Any inquiry regarding this decision should be directed to Wellington Chin, Quality Assurance Specialist, at (571) 272-3134).

John Leguyader, Director
Technology Center 2600
Communications

UNITED STATES PATENT AND TRADEMARK OFFICE

UNITED STATES DEPARTMENT OF COMMERCE
United States Patent and Trademark Office
Address: COMMISSIONER FOR PATENTS
P.O. Box 1450
Alexandria, Virginia 22313-1450
www.uspto.gov

APPLICATION NO.	FILING DATE	FIRST NAMED INVENTOR	ATTORNEY DOCKET NO.	CONFIRMATION NO.
11/907,468	10/12/2007	Chang-Chèng Lin	TAIW-431D1	5083

23995 7590 10/27/2011
RABIN & Berdo, PC
1101 14TH STREET, NW
SUITE 500
WASHINGTON, DC 20005

EXAMINER
WUJCIAK, ALFRED J

ART UNIT	PAPER NUMBER
3632	

MAIL DATE	DELIVERY MODE
10/27/2011	PAPER

Please find below and/or attached an Office communication concerning this application or proceeding.

The time period for reply, if any, is set in the attached communication.

UNITED STATES PATENT AND TRADEMARK OFFICE

Commissioner for Patents
United States Patent and Trademark Office
P.O. Box 1450
Alexandria, VA 22313-1450
www.uspto.gov

MAIL

OCT 27 2011
DIRECTOR'S OFFICE
TECHNOLOGY CENTER 2600

HARNESS, DICKEY & PIERCE, P.L.C.
P.O. BOX 8910
RESTON VA 20195

In re Application of
JEON, BYEONG MOON et al
Application No. 11/907,462
Filed: October 12, 2007
For: **METHOD OF DETERMINING MOTION VECTORS AND A REFERENCE PICTURE INDEX FOR A CURRENT BLOCK IN A PICTURE TO BE DECODED**

DECISION ON REQUEST

This is a decision on the request for continued suspension of action under 37 C.F.R. § 1.103(a) filed October 12, 2011.

Applicants request a fifth period of suspension for 6 months. The reason for the request is the Applicants have not received a decision in the appeal for Application No. 11/907,460 ('460 application). As stated in Applicants' previous Petition to Suspend, the art cited against the claims in the subject application is the same as art cited against the claims in Application No. 11/907,460. The claims include at least one feature commensurate in scope with at least one feature claimed in Application No. 11/907,460. Furthermore, this feature forms at least one basis for arguing patentability in the Appeal of Application No. 11/907,460. As such, the outcome of the Appeal in Application No. 11/907,460 may be dispositive of patentability in the subject application.

37 C.F.R. § 1.103 Suspension of action by the Office, states in part:

(a) Suspension for cause. On request of the applicant, the Office may grant a suspension of action by the Office under this paragraph for good and sufficient cause. The Office will not suspend action if a reply by applicant to an Office action is outstanding. Any petition for suspension of action under this paragraph must specify a period of suspension **not exceeding six months**. Any petition for suspension of action under this paragraph must also include:

(1) A showing of good and sufficient cause for suspension of action; and

(2) The fee set forth in § 1.17(h), unless such cause is the fault of the Office. [emphasis added]

709 [R-2] Suspension of Action, states in part:...

Suspension of action under 37 CFR 1.103(a)-(d) at the applicant's request will cause a reduction in patent term adjustment accumulated (if any) under 37 CFR 1.703. The reduction is equal to the number of days beginning on the date a request for suspension of action was filed and ending on the date of the termination of the suspension. See 37 CFR 1.704(c)(1).

Pursuant to applicant's request, suspension on this application is **GRANTED**. Ex parte prosecution is SUSPENDED FOR A PERIOD OF 6 MONTHS. At the end of this period, applicant is required to notify the examiner and request continuance of prosecution or a further suspension. See MPEP § 709.

Any inquiry regarding this decision should be directed to Wellington Chin, Quality Assurance Specialist, at (571) 272-3134).

John LeGuyader, Director
Technology Center 2600
Communications

UNITED STATES PATENT AND TRADEMARK OFFICE

Commissioner for Patents
United States Patent and Trademark Office
P.O. Box 1450
Alexandria, VA 22313-1450
www.uspto.gov

WILSON WU
19 CLIPPER ROAD
NORTH YORK
TORONTO ON M2J 4C8 CA
CANADA

MAILED

AUG 27 2010

OFFICE OF PETITIONS

In re Application of :
Xinhua Huang :
Application No. 11/907,541 : DECISION ON PETITION
Filed: October 15, 2007 :
Attorney Docket No. 30004XHSL :

This is a decision on the petition under the unavoidable provisions of 37 CFR 1.137(a), filed June 28, 2010, to revive the above-identified application.

The application became abandoned for failure to reply in a timely manner to the non-final Office action mailed, October 16, 2008, which set a shortened statutory period for reply of three (3) months. No extensions of time under the provisions of 37 CFR 1.136(a) were obtained. Accordingly, the application became abandoned on January 17, 2009.

The petition is **DISMISSED.**

A grantable petition under 37 CFR 1.137(a) must be accompanied by: (1) the required reply, unless previously filed; (2) the petition fee as set forth in 37 CFR 1.17(l); (3) a showing to the satisfaction of the Director that the entire delay in filing the required reply from the due date for the reply until the filing of a grantable petition pursuant to 37 CFR 1.137(a) was unavoidable; and (4) any terminal disclaimer (and fee as set forth in 37 CFR 1.20(d)) required pursuant to 37 CFR 1.137(d). The instant petition lacks item (3).

Petition attests that the response to the non-final Office action mailed October 16, 2008 was unavoidable because the Office action was never received.

The showing of record is not sufficient to establish to the satisfaction of the Director that the delay was unavoidable within the meaning of 35 U.S.C. § 133 and 37 CFR 1.137(a). See MPEP 711(c)(III)(C)(2) for a discussion of the requirements for a showing of unavoidable delay

Decisions on reviving abandoned applications on the basis of "unavoidable" delay have adopted the reasonably prudent person standard in determining if the delay was unavoidable:

> The word 'unavoidable' . . . is applicable to ordinary human affairs, and requires no more or greater care or diligence than is generally used and observed by prudent and careful men in relation to their most important business. It permits them in the exercise of this care to rely upon the ordinary and trustworthy agencies of mail and telegraph, worthy and reliable employees, and such other means and instrumentalities as are usually employed in such important business. If unexpectedly, or through the unforeseen fault or imperfection of these agencies and instrumentalities, there occurs a failure, it may properly be said to be unavoidable, all other conditions of promptness in its rectification being present.

In re Mattullath, 38 App. D.C. 497, 514-15 (1912)(quoting Ex parte Pratt, 1887 Dec. Comm'r Pat. 31, 32-33 (1887)); see also Winkler v. Ladd, 221 F. Supp. 550, 552, 138 USPQ 666, 167-68 (D.D.C. 1963), aff'd, 143 USPQ 172 (D.C. Cir. 1963); Ex parte Henrich, 1913 Dec. Comm'r Pat. 139, 141 (1913). In addition, decisions on revival are made on a "case-by-case basis, taking all the facts and circumstances into account." Smith v. Mossinghoff, 671 F.2d 533, 538, 213 USPQ 977, 982 (D.C. Cir. 1982). Finally, a petition cannot be granted where a petitioner has failed to meet his or her burden of establishing that the delay was "unavoidable." Haines v. Quigg, 673 F. Supp. 314, 316-17, 5 USPQ2d 1130, 1131-32 (N.D. Ind. 1987).

A review of the record indicates that the Office action was mailed to the address of record. Unfortunately a change of address was received on October 28, 2008. A delay caused by the failure on the part of petitioner, or petitioner's representative, to provide the U.S. Patent and Trademark Office with a current correspondence address does not constitute an unavoidable delay. See Ray v. Lehman, 55 F.3d 606, 34 USPQ2d 1786 (Fed. Cir. 1995).

If petitioner cannot provide the evidence necessary to establish unavoidable delay, or simply does not wish to, petitioner may wish to consider filing a petition stating that the delay was unintentional. Public Law 97-247, § 3, 96 Stat. 317 (1982), which revised patent and trademark fees, amended 35 U.S.C. § 41(a)(7) to provide for the revival of an "unintentionally" abandoned application without a showing that the delay in prosecution or in late payment of the issue fee was "unavoidable." This amendment to 35 U.S.C. § 41(a)(7) has been implemented in 37 CFR 1.137(b). An "unintentional" petition under 37 CFR 1.137(b) must be accompanied by the $810 petition fee.

The filing of a petition under 37 CFR 1.137(b) cannot be intentionally delayed and therefore must be filed promptly. A person seeking revival due to unintentional delay cannot make a statement that the delay was unintentional unless the entire delay, including the date it was discovered that the application was abandoned until the filing of the petition to revive under 37 CFR 1.137(b), was unintentional. A statement that the delay was unintentional is not appropriate if petitioner intentionally delayed the filing of a petition for revival under 37 CFR 1.137(b).

Any further petition to revive must be submitted within **TWO (2) MONTHS** from the mail date of this decision. Extensions of time under 37 CFR 1.136(a) are permitted. The reconsideration request should include a cover letter entitled "Renewed Petition under 37 CFR 1.137(a)." This is **not** a final agency action within the meaning of 5 U.S.C.§ 704.

Further correspondence with respect to this matter should be addressed as follows:

By Mail: Mail Stop PETITION
Commissioner for Patents
P. O. Box 1450
Alexandria, VA 22313-1450

By hand: U. S. Patent and Trademark Office
Customer Service Window, Mail Stop Petitions
Randolph Building
401 Dulany Street
Alexandria, VA 22314

By facsimile: **(571) 273-8300**
Attn: Office of Petitions

Telephone inquiries concerning this decision should be directed to April M. Wise at (571) 272-1642.

/dab/
David Bucci
Petitions Examiner
Office of Petitions

Encl. Copy of non-final Office action mailed October 16, 2008

UNITED STATES PATENT AND TRADEMARK OFFICE

UNITED STATES DEPARTMENT OF COMMERCE
United States Patent and Trademark Office
Address: COMMISSIONER FOR PATENTS
P.O. Box 1450
Alexandria, Virginia 22313-1450
www.uspto.gov

APPLICATION NO.	FILING DATE	FIRST NAMED INVENTOR	ATTORNEY DOCKET NO.	CONFIRMATION NO.
11/907,541	10/15/2007	Xinhua Huang	30004XHSL	4058

7590 10/16/2008

Canghui Song
PMB 601
1750-1 30th Street
Boulder, CO 80301

EXAMINER
MASHRUWALA, NIKHIL P

ART UNIT	PAPER NUMBER
3749	

MAIL DATE	DELIVERY MODE
10/16/2008	PAPER

Please find below and/or attached an Office communication concerning this application or proceeding.

The time period for reply, if any, is set in the attached communication.

Office Action Summary	Application No.	Applicant(s)
	11/907,541	HUANG, XINHUA
	Examiner	Art Unit
	NIKHIL MASHRUWALA	3749

– The MAILING DATE of this communication appears on the cover sheet with the correspondence address –

Period for Reply

A SHORTENED STATUTORY PERIOD FOR REPLY IS SET TO EXPIRE 3 MONTH(S) OR THIRTY (30) DAYS, WHICHEVER IS LONGER, FROM THE MAILING DATE OF THIS COMMUNICATION.

- Extensions of time may be available under the provisions of 37 CFR 1.136(a). In no event, however, may a reply be timely filed after SIX (6) MONTHS from the mailing date of this communication.
- If NO period for reply is specified above, the maximum statutory period will apply and will expire SIX (6) MONTHS from the mailing date of this communication.
- Failure to reply within the set or extended period for reply will, by statute, cause the application to become ABANDONED (35 U.S.C. § 133). Any reply received by the Office later than three months after the mailing date of this communication, even if timely filed, may reduce any earned patent term adjustment. See 37 CFR 1.704(b).

Status

1)☐ Responsive to communication(s) filed on _____.

2a)☐ This action is **FINAL**. 2b)☒ This action is non-final.

3)☐ Since this application is in condition for allowance except for formal matters, prosecution as to the merits is closed in accordance with the practice under *Ex parte Quayle*, 1935 C.D. 11, 453 O.G. 213.

Disposition of Claims

4)☒ Claim(s) 1-8 is/are pending in the application.

4a) Of the above claim(s) _____ is/are withdrawn from consideration.

5)☐ Claim(s) _____ is/are allowed.

6)☒ Claim(s) 1-8 is/are rejected.

7)☐ Claim(s) _____ is/are objected to.

8)☐ Claim(s) _____ are subject to restriction and/or election requirement.

Application Papers

9)☐ The specification is objected to by the Examiner.

10)☒ The drawing(s) filed on 15 October 2007 is/are: a)☒ accepted or b)☐ objected to by the Examiner.

Applicant may not request that any objection to the drawing(s) be held in abeyance. See 37 CFR 1.85(a).

Replacement drawing sheet(s) including the correction is required if the drawing(s) is objected to. See 37 CFR 1.121(d).

11)☐ The oath or declaration is objected to by the Examiner. Note the attached Office Action or form PTO-152.

Priority under 35 U.S.C. § 119

12)☐ Acknowledgment is made of a claim for foreign priority under 35 U.S.C. § 119(a)-(d) or (f).

a)☐ All b)☐ Some * c)☐ None of:

1.☐ Certified copies of the priority documents have been received.

2.☐ Certified copies of the priority documents have been received in Application No. _____.

3.☐ Copies of the certified copies of the priority documents have been received in this National Stage application from the International Bureau (PCT Rule 17.2(a)).

* See the attached detailed Office action for a list of the certified copies not received.

Attachment(s)

1) ☒ Notice of References Cited (PTO-892)

2) ☐ Notice of Draftsperson's Patent Drawing Review (PTO-948)

3) ☐ Information Disclosure Statement(s) (PTO/SB/08) Paper No(s)/Mail Date _____.

4) ☐ Interview Summary (PTO-413) Paper No(s)/Mail Date. _____ .

5) ☐ Notice of Informal Patent Application

6) ☐ Other: _____.

DETAILED ACTION

Claim Rejections - 35 USC § 102

1. The following is a quotation of the appropriate paragraphs of 35 U.S.C. 102 that form the basis for the rejections under this section made in this Office action:

> A person shall be entitled to a patent unless –
>
> (b) the invention was patented or described in a printed publication in this or a foreign country or in public use or on sale in this country, more than one year prior to the date of application for patent in the United States.

2. Claims 1-2 are rejected under 35 U.S.C. 102(b) as being anticipated by US Pub 2005/0118546 of Luo.

For claim 1, Luo shows and discloses per figs 1-4 a childproof lighter 1 comprising a body on which a pair of brackets 10 are formed, a pivotal means 32 being of bar-shaped and installed on said pair of brackets 10, a free wheel/cap 40 rotatably installed on said pivotal means (see abstract & para 40 on page 3), a flint wheel 20 covering on said pivotal means, a fixed wheel 34 covering on said pivotal means and fixed with respect to said flint wheel 20, a flint 5 with respect of which said flint wheel 20 and fixed gear wheel 30 is able to rotate, and a flint spring 6 pressing said flint on said flint wheel 20.

For claim 2, Luo shows two identical shorter pivotal means/shaft 32 (33) per fig 2.

Claim Rejections - 35 USC § 103

3. The following is a quotation of 35 U.S.C. 103(a) which forms the basis for all obviousness rejections set forth in this Office action:

> (a) A patent may not be obtained though the invention is not identically disclosed or described as set forth in section 102 of this title, if the differences between the subject matter sought to be patented and the prior art are such that the subject matter as a whole would have been obvious at the time the invention was made to a person having ordinary skill in the art to which said subject matter pertains. Patentability shall not be negatived by the manner in which the invention was made.

4. The factual inquiries set forth in *Graham* **v.** *John Deere Co.*, 383 U.S. 1, 148 USPQ 459 (1966), that are applied for establishing a background for determining obviousness under 35 U.S.C. 103(a) are summarized as follows:

1. Determining the scope and contents of the prior art.
2. Ascertaining the differences between the prior art and the claims at issue.
3. Resolving the level of ordinary skill in the pertinent art.
4. Considering objective evidence present in the application indicating obviousness or nonobviousness.

5. Claims 3-8 are rejected under 35 U.S.C. 103(a) as being unpatentable over Luo in view of US pub 2004/0224270 of Yang.

For claims 3-4, Luo discloses little higher radius of free cap/wheel 40 than fixed gear wheel 30 so as to the gear to fit inside the cap and it would be obvious for a person of ordinary skill in the art at the time invention was made to have 0.1 to 1.00 mm greater radius of free cap/wheel than gear wheel 30.

For claims 5-6, Luo does not disclose the thickness of the free wheel. Yang discloses thickness of a conventional circular disc/driving wheel 64 to be between 1.2 to 1.8 mm (see page 3, para 0043) and it would be obvious for a person of ordinary skill in the art to have wheel/disc thickness to be 0.8 to 1.2 mm per choice in design.

For claims 7-8, Luo discloses flint wheel 20 and driving wheel 31 are close/tight fit (see para 10 & 42) into its axel (321 & 33) and it would a choice in design per ordinary skill in the art to modify the fitting of these wheels to be loose fit with its axel.

Conclusion

6. The prior art made of record and not relied upon is considered pertinent to applicant's disclosure. The publication or patents of Luo, Yang and Junkang Ruan disclose the state of the art in a child resistant flint lighter with free wheel.

Any inquiry concerning this communication or earlier communications from the examiner should be directed to NIKHIL MASHRUWALA whose telephone number is (571)270-3519. The examiner can normally be reached on Monday thru Friday-7:30am-5:00pm.

If attempts to reach the examiner by telephone are unsuccessful, the examiner's supervisor, Steven McAllister can be reached on 571-272-6785. The fax phone number for the organization where this application or proceeding is assigned is 571-273-8300.

Information regarding the status of an application may be obtained from the Patent Application Information Retrieval (PAIR) system. Status information for published applications may be obtained from either Private PAIR or Public PAIR. Status information for unpublished applications is available through Private PAIR only. For more information about the PAIR system, see http://pair-direct.uspto.gov. Should you have questions on access to the Private PAIR system, contact the Electronic Business Center (EBC) at 866-217-9197 (toll-free). If you would like assistance from a USPTO Customer Service Representative or access to the automated information system, call 800-786-9199 (IN USA OR CANADA) or 571-272-1000.

/Nikhil Mashruwala/
Examiner, Art Unit 3749

/Steven B. McAllister/
Supervisory Patent Examiner, Art Unit 3749

Notice of References Cited	Application/Control No. 11/907,541	Applicant(s)/Patent Under Reexamination HUANG, XINHUA	
	Examiner NIKHIL MASHRUWALA	Art Unit 3749	Page 1 of 1

U.S. PATENT DOCUMENTS

*		Document Number Country Code-Number-Kind Code	Date MM-YYYY	Name	Classification
*	A	US-2005/0118546	06-2005	Luo, Xing Wen	431/153
*	B	US-2004/0224270	11-2004	Yang, John Jiin Chung	431/153
	C	US-			
	D	US-			
	E	US-			
	F	US-			
	G	US-			
	H	US-			
	I	US-			
	J	US-			
	K	US-			
	L	US-			
	M	US-			

FOREIGN PATENT DOCUMENTS

*		Document Number Country Code-Number-Kind Code	Date MM-YYYY	Country	Name	Classification
	N					
	O					
	P					
	Q					
	R					
	S					
	T					

NON-PATENT DOCUMENTS

*		Include as applicable: Author, Title Date, Publisher, Edition or Volume, Pertinent Pages)
	U	
	V	
	W	
	X	

*A copy of this reference is not being furnished with this Office action. (See MPEP § 707.05(a).)
Dates in MM-YYYY format are publication dates. Classifications may be US or foreign.

UNITED STATES PATENT AND TRADEMARK OFFICE

Commissioner for Patents
United States Patent and Trademark Office
P.O. Box 1450
Alexandria, VA 22313-1450
www.uspto.gov

WILSON WU
19 CLIPPER ROAD
NORTH YORK
TORONTO ON M2J 4C8 CA
CANADA

MAILED

OCT 18 2010

OFFICE OF PETITIONS

In re Application of :
Xinhua Huang :
Application No. 11/907,541 : DECISION ON PETITION
Filed: October 15, 2007 :
Attorney Docket No. 30004XHSL :

This is a decision on the petition under the unintentional provisions of 37 CFR 1.137(b), filed September 08, 2010, to revive the above-identified application.

The application became abandoned for failure to reply in a timely manner to the non-final Office action mailed, October 16, 2008, which set a shortened statutory period for reply of three (3) months. No extensions of time under the provisions of 37 CFR 1.136(a) were obtained. Accordingly, the application became abandoned on January 17, 2009.

The petition is **DISMISSED.**

A grantable petition under 37 CFR 1.137(b) must be accompanied by: (1) the required reply, unless previously filed; (2) the petition fee as set forth in 37 CFR 1.17(m); (3) a statement that the entire delay in filing the required reply from the due date for the reply until the filing of a grantable petition pursuant to 37 CFR 1.137(b) was unintentional; and (4) any terminal disclaimer (and fee as set forth in 37 CFR 1.20(d)) required by 37 CFR 1.137(d). Where there is a question as to whether either the abandonment or the delay in filing a petition under 37 CFR 1.137 was unintentional, the Director may require additional information. See MPEP 711.03(c)(II)(C) and (D). The instant petition lacks item(s) (1) and (4).

With respect to item 1:

A petition to revive cannot be granted where there is an outstanding requirement. In the instant case, there was no response to the outstanding Office action mailed October 16, 2008. A courtesy copy of this Office action is being mailed along with this decision. Accordingly, the petition to revive cannot be granted until the response to the Office action is received.

With respect to item 4:

It is noted that petitioner filed a terminal disclaimer that is deemed unnecessary because petitioner stated that the application was filed after June 8, 1995 and no terminal disclaimer is needed.

Any further petition to revive must be submitted within **TWO (2) MONTHS** from the mail date of this decision. Extensions of time under 37 CFR 1.136(a) are permitted. The reconsideration request should include a cover letter entitled "Renewed Petition under 37 CFR 1.137(b)." This is **not** a final agency action within the meaning of 5 U.S.C.§ 704.

Further correspondence with respect to this matter should be addressed as follows:

By Mail: Mail Stop PETITION
Commissioner for Patents
P. O. Box 1450
Alexandria, VA 22313-1450

By hand: U. S. Patent and Trademark Office
Customer Service Window, Mail Stop Petitions
Randolph Building
401 Dulany Street
Alexandria, VA 22314

By facsimile: **(571) 273-8300**
Attn: Office of Petitions

Telephone inquiries concerning this decision should be directed to undersigned at (571) 272-1642.

/AMW/
April M. Wise
Petitions Examiner
Office of Petitions

Courtesy copy of Office action October 16, 2008.

UNITED STATES PATENT AND TRADEMARK OFFICE

UNITED STATES DEPARTMENT OF COMMERCE
United States Patent and Trademark Office
Address: COMMISSIONER FOR PATENTS
P.O. Box 1450
Alexandria, Virginia 22313-1450
www.uspto.gov

APPLICATION NO.	FILING DATE	FIRST NAMED INVENTOR	ATTORNEY DOCKET NO.	CONFIRMATION NO.
11/907,541	10/15/2007	Xinhua Huang	30004XHSL	4058

7590 10/16/2008

Canghui Song
PMB 601
1750-1 30th Street
Boulder, CO 80301

EXAMINER
MASHRUWALA, NIKHIL P

ART UNIT	PAPER NUMBER
3749	

MAIL DATE	DELIVERY MODE
10/16/2008	PAPER

Please find below and/or attached an Office communication concerning this application or proceeding.

The time period for reply, if any, is set in the attached communication.

Office Action Summary	Application No.	Applicant(s)	
	11/907,541	HUANG, XINHUA	
	Examiner	Art Unit	
	NIKHIL MASHRUWALA	3749	

-- The MAILING DATE of this communication appears on the cover sheet with the correspondence address --

Period for Reply

A SHORTENED STATUTORY PERIOD FOR REPLY IS SET TO EXPIRE 3 MONTH(S) OR THIRTY (30) DAYS, WHICHEVER IS LONGER, FROM THE MAILING DATE OF THIS COMMUNICATION.

- Extensions of time may be available under the provisions of 37 CFR 1.136(a). In no event, however, may a reply be timely filed after SIX (6) MONTHS from the mailing date of this communication.
- If NO period for reply is specified above, the maximum statutory period will apply and will expire SIX (6) MONTHS from the mailing date of this communication.
- Failure to reply within the set or extended period for reply will, by statute, cause the application to become ABANDONED (35 U.S.C. § 133). Any reply received by the Office later than three months after the mailing date of this communication, even if timely filed, may reduce any earned patent term adjustment. See 37 CFR 1.704(b).

Status

1)☐ Responsive to communication(s) filed on _____.

2a)☐ This action is **FINAL**. 2b)☒ This action is non-final.

3)☐ Since this application is in condition for allowance except for formal matters, prosecution as to the merits is closed in accordance with the practice under *Ex parte Quayle*, 1935 C.D. 11, 453 O.G. 213.

Disposition of Claims

4)☒ Claim(s) 1-8 is/are pending in the application.

4a) Of the above claim(s) _____ is/are withdrawn from consideration.

5)☐ Claim(s) _____ is/are allowed.

6)☒ Claim(s) 1-8 is/are rejected.

7)☐ Claim(s) _____ is/are objected to.

8)☐ Claim(s) _____ are subject to restriction and/or election requirement.

Application Papers

9)☐ The specification is objected to by the Examiner.

10)☒ The drawing(s) filed on 15 October 2007 is/are: a)☒ accepted or b)☐ objected to by the Examiner.

Applicant may not request that any objection to the drawing(s) be held in abeyance. See 37 CFR 1.85(a).

Replacement drawing sheet(s) including the correction is required if the drawing(s) is objected to. See 37 CFR 1.121(d).

11)☐ The oath or declaration is objected to by the Examiner. Note the attached Office Action or form PTO-152.

Priority under 35 U.S.C. § 119

12)☐ Acknowledgment is made of a claim for foreign priority under 35 U.S.C. § 119(a)-(d) or (f).

a)☐ All b)☐ Some * c)☐ None of:

1.☐ Certified copies of the priority documents have been received.

2.☐ Certified copies of the priority documents have been received in Application No. _____.

3.☐ Copies of the certified copies of the priority documents have been received in this National Stage application from the International Bureau (PCT Rule 17.2(a)).

* See the attached detailed Office action for a list of the certified copies not received.

Attachment(s)

1) ☒ Notice of References Cited (PTO-892)

2) ☐ Notice of Draftsperson's Patent Drawing Review (PTO-948)

3) ☐ Information Disclosure Statement(s) (PTO/SB/08) Paper No(s)/Mail Date _____.

4) ☐ Interview Summary (PTO-413) Paper No(s)/Mail Date. _____ .

5) ☐ Notice of Informal Patent Application

6) ☐ Other: _____.

DETAILED ACTION

Claim Rejections - 35 USC § 102

1. The following is a quotation of the appropriate paragraphs of 35 U.S.C. 102 that form the basis for the rejections under this section made in this Office action:

> A person shall be entitled to a patent unless –
>
> (b) the invention was patented or described in a printed publication in this or a foreign country or in public use or on sale in this country, more than one year prior to the date of application for patent in the United States.

2. Claims 1-2 are rejected under 35 U.S.C. 102(b) as being anticipated by US Pub 2005/0118546 of Luo.

For claim 1, Luo shows and discloses per figs 1-4 a childproof lighter 1 comprising a body on which a pair of brackets 10 are formed, a pivotal means 32 being of bar-shaped and installed on said pair of brackets 10, a free wheel/cap 40 rotatably installed on said pivotal means (see abstract & para 40 on page 3), a flint wheel 20 covering on said pivotal means, a fixed wheel 34 covering on said pivotal means and fixed with respect to said flint wheel 20, a flint 5 with respect of which said flint wheel 20 and fixed gear wheel 30 is able to rotate, and a flint spring 6 pressing said flint on said flint wheel 20.

For claim 2, Luo shows two identical shorter pivotal means/shaft 32 (33) per fig 2.

Claim Rejections - 35 USC § 103

3. The following is a quotation of 35 U.S.C. 103(a) which forms the basis for all obviousness rejections set forth in this Office action:

> (a) A patent may not be obtained though the invention is not identically disclosed or described as set forth in section 102 of this title, if the differences between the subject matter sought to be patented and the prior art are such that the subject matter as a whole would have been obvious at the time the invention was made to a person having ordinary skill in the art to which said subject matter pertains. Patentability shall not be negatived by the manner in which the invention was made.

4. The factual inquiries set forth in *Graham* **v.** *John Deere Co.*, 383 U.S. 1, 148 USPQ 459 (1966), that are applied for establishing a background for determining obviousness under 35 U.S.C. 103(a) are summarized as follows:

1. Determining the scope and contents of the prior art.
2. Ascertaining the differences between the prior art and the claims at issue.
3. Resolving the level of ordinary skill in the pertinent art.
4. Considering objective evidence present in the application indicating obviousness or nonobviousness.

5. Claims 3-8 are rejected under 35 U.S.C. 103(a) as being unpatentable over Luo in view of US pub 2004/0224270 of Yang.

For claims 3-4, Luo discloses little higher radius of free cap/wheel 40 than fixed gear wheel 30 so as to the gear to fit inside the cap and it would be obvious for a person of ordinary skill in the art at the time invention was made to have 0.1 to 1.00 mm greater radius of free cap/wheel than gear wheel 30.

For claims 5-6, Luo does not disclose the thickness of the free wheel. Yang discloses thickness of a conventional circular disc/driving wheel 64 to be between 1.2 to 1.8 mm (see page 3, para 0043) and it would be obvious for a person of ordinary skill in the art to have wheel/disc thickness to be 0.8 to 1.2 mm per choice in design.

For claims 7-8, Luo discloses flint wheel 20 and driving wheel 31 are close/tight fit (see para 10 & 42) into its axel (321 & 33) and it would a choice in design per ordinary skill in the art to modify the fitting of these wheels to be loose fit with its axel.

Conclusion

6. The prior art made of record and not relied upon is considered pertinent to applicant's disclosure. The publication or patents of Luo, Yang and Junkang Ruan disclose the state of the art in a child resistant flint lighter with free wheel.

Any inquiry concerning this communication or earlier communications from the examiner should be directed to NIKHIL MASHRUWALA whose telephone number is (571)270-3519. The examiner can normally be reached on Monday thru Friday-7:30am-5:00pm.

If attempts to reach the examiner by telephone are unsuccessful, the examiner's supervisor, Steven McAllister can be reached on 571-272-6785. The fax phone number for the organization where this application or proceeding is assigned is 571-273-8300.

Information regarding the status of an application may be obtained from the Patent Application Information Retrieval (PAIR) system. Status information for published applications may be obtained from either Private PAIR or Public PAIR. Status information for unpublished applications is available through Private PAIR only. For more information about the PAIR system, see http://pair-direct.uspto.gov. Should you have questions on access to the Private PAIR system, contact the Electronic Business Center (EBC) at 866-217-9197 (toll-free). If you would like assistance from a USPTO Customer Service Representative or access to the automated information system, call 800-786-9199 (IN USA OR CANADA) or 571-272-1000.

/Nikhil Mashruwala/
Examiner, Art Unit 3749

/Steven B. McAllister/
Supervisory Patent Examiner, Art Unit 3749

Notice of References Cited	Application/Control No. 11/907,541	Applicant(s)/Patent Under Reexamination HUANG, XINHUA	
	Examiner NIKHIL MASHRUWALA	Art Unit 3749	Page 1 of 1

U.S. PATENT DOCUMENTS

*		Document Number Country Code-Number-Kind Code	Date MM-YYYY	Name	Classification
*	A	US-2005/0118546	06-2005	Luo, Xing Wen	431/153
*	B	US-2004/0224270	11-2004	Yang, John Jiin Chung	431/153
	C	US-			
	D	US-			
	E	US-			
	F	US-			
	G	US-			
	H	US-			
	I	US-			
	J	US-			
	K	US-			
	L	US-			
	M	US-			

FOREIGN PATENT DOCUMENTS

*		Document Number Country Code-Number-Kind Code	Date MM-YYYY	Country	Name	Classification
	N					
	O					
	P					
	Q					
	R					
	S					
	T					

NON-PATENT DOCUMENTS

*		Include as applicable: Author, Title Date, Publisher, Edition or Volume, Pertinent Pages)
	U	
	V	
	W	
	X	

*A copy of this reference is not being furnished with this Office action. (See MPEP § 707.05(a).)
Dates in MM-YYYY format are publication dates. Classifications may be US or foreign.

UNITED STATES PATENT AND TRADEMARK OFFICE

Commissioner for Patents
United States Patent and Trademark Office
P.O. Box 1450
Alexandria, VA 22313-1450
www.uspto.gov

MAILED

MAR 11 2011

OFFICE OF PETITIONS

BARRON & YOUNG INTELLECTUAL PROPERTY
P.O. BOX 1484
GENERAL POST OFFICE
HONG KONG HK **HONG KONG**

In re Patent No. 7,882,572	:	
Issue Date: February 8, 2011	:	
Application No. 11/907,560	:	NOTICE
Filed: October 15, 2007	:	
Patentee(s): Cham Wah Wong	:	

This is a Notice regarding your request for acceptance of a fee deficiency submission under 37 CFR 1.28, filed on January 7, 2011.

The Office no longer investigates or rejects original or reissue applications under 37 CFR 1.56. 1098 Off. Gaz. Pat. Office 502 (January 3, 1989). Therefore, nothing in this Notice is intended to imply that an investigation was done.

Your fee deficiency submission under 37 CFR 1.28 is hereby **ACCEPTED**. Therefore, status as a small entity has been removed and any future fee(s) submitted must be paid at the large entity rate.

Inquiries related to this communication should be directed to the undersigned at (571) 272-3226.

Andrea Smith
Petitions Examiner
Office of Petitions

UNITED STATES PATENT AND TRADEMARK OFFICE

Commissioner for Patents
United States Patent and Trademark Office
P.O. Box 1450
Alexandria, VA 22313-1450
www.uspto.gov

JACOBSON HOLMAN PLLC
400 SEVENTH STREET N.W.
SUITE 600
WASHINGTON DC 20004

MAILED
OCT 18 2010
OFFICE OF PETITIONS

In re Application of	:	
Carlo Migli	:	
Application No. 11/907,662	:	DECISION ON PETITION
Filed: October 16, 2007	:	
Attorney Docket No. P72204US0	:	

This is a decision on the petition, filed July 12, 2010, which is being treated as a petition under 37 CFR 1.181 (no fee) requesting withdrawal of the holding of abandonment in the above-identified application.

The petition is **GRANTED**.

This application was held abandoned for failure to timely pay the issue and publication fees on or before April 26, 2010, as required by the Notice of Allowance and Fee(s) Due (Notice), mailed January 26, 2010. A Notice of Abandonment was mailed May 12, 2010.

Petitioner asserts that the Notice dated January 26, 2010 was not received.

A review of the written record indicates no irregularity in the mailing of the Notice and, in the absence of any irregularity, there is a strong presumption that the Notice was properly mailed to the practitioner at the address of record. This presumption may be overcome by a showing that the Office action was not in fact received.

The showing required to establish nonreceipt of an Office communication must include:

(1) a statement from the practitioner describing the system used for recording an Office action received at the correspondence address of record with the USPTO. The statement should establish that the docketing system is sufficiently reliable. It is expected that the record would include, but not be limited to, the application number, attorney docket number, the mail date of the Office action and the due date for the response.

(2) Practitioner must state that the Office action was not received at the correspondence address of record, and that a search of the practitioner's record(s), including any file jacket or the equivalent, and the application contents, indicates that the Office action was not received.

(3) A copy of the record(s) used by the practitioner where the non-received Office action would have been entered had it been received is required. A copy of the practitioner's record(s) required to show non-receipt of the Office action should include the master docket for the firm. That is, if a three month period for reply was set in the nonreceived Office action, a copy of the master docket report showing all replies docketed for a date three months from the mail date of the nonreceived Office action must be submitted as documentary proof of nonreceipt of the Office action. If no such master docket exists, the practitioner should so state and provide other evidence such as, but not limited to, the following: the application file jacket; incoming mail log; calendar; reminder system; or the individual docket record for the application in question. See MPEP §711.03(c)(I)(A).

The petition satisfies the above-stated requirements. Accordingly, the application was not abandoned in fact.

In view of the above, the Notice of Abandonment is hereby vacated and the holding of abandonment withdrawn.

This application is being referred to the Technology Center AU 3677 technical support staff for re-mailing the Notice of Allowability and the Notice of Allowance and Fee(s) Due of January 26, 2010. The period for paying the issue and publication fees will be reset to expire three (3) months from the date the Notices are re-mailed. This period is not extendable under the provisions of 37 CFR 1.136.

/Ramesh Krishnamurthy/
Ramesh Krishnamurthy
Petitions Examiner
Office of Petitions

UNITED STATES PATENT AND TRADEMARK OFFICE

Commissioner for Patents
United States Patent and Trademark Office
P.O. Box 1450
Alexandria, VA 22313-1450
www.uspto.gov

ZILKA-KOTAB, PC
P.O. BOX 721120
SAN JOSE, CA 95172-1120

MAILED
APR 11 2011
OFFICE OF PETITIONS

In re Application of Tarbotton et al. Application No. 11/907,668 Filed: October 16, 2007 Attorney Docket No. NAI1P680/07.062.01	: : : : :	DECISION ON PETITION TO WITHDRAW FROM RECORD

This is a decision on the Request to Withdraw as attorney or agent of record under 37 C.F.R. § 1.36(b), filed February 25, 2011.

The request is **NOT APPROVED** because it is moot.

A review of the file record indicates that on March 10, 2011 the power of attorney to Zilka-Kotab, PC was revoked by the assignee of the patent application. Accordingly, the request to withdraw under 37 C.F.R. § 1.36(b) is moot.

All future communications from the Office will be directed to the below-listed address until otherwise notified by applicant.

Telephone inquires concerning this decision should be directed to the undersigned at 571-272- 7751. All other inquires concerning either the examination or status of the application should be directed to the Technology Center.

Joan Olszewski
Petitions Examiner
Office of Petitions

cc: Patent Capital Group
6119 McCommas Blvd
Dallas TX 75214

UNITED STATES PATENT AND TRADEMARK OFFICE

UNITED STATES DEPARTMENT OF COMMERCE
United States Patent and Trademark Office
Address: COMMISSIONER FOR PATENTS
P.O. Box 1450
Alexandria, Virginia 22313-1450
www.uspto.gov

APPLICATION NO.	FILING DATE	FIRST NAMED INVENTOR	ATTORNEY DOCKET NO.	CONFIRMATION NO.
11/907,697	10/16/2007	Chin-Tarng Lin	2846-0515PUS1	5295

7590 02/02/2011
BIRCH STEWART KOLASCH & BIRCH
PO BOX 747
FALLS CHURCH, VA 22040-0747

EXAMINER
YAO, LEI

ART UNIT	PAPER NUMBER
1642	

NOTIFICATION DATE	DELIVERY MODE
02/02/2011	ELECTRONIC

ACKNOWLEDGEMENT OF REQUEST

Notice of Allowance/Allowability Mailed

The request to print a color drawing reference as the first paragraph in the portion of the specification containing a brief description of the drawings as required by 37 CFR 1.84 and MPEP § 608.02 has been received by the United States Patent and Trademark Office and will be entered into the specification.

571-272-4200 or 1-888-786-0101
Application Assistance Unit
Office of Data Management

FORM PTOM327-5 (Rev. 02/08)

UNITED STATES PATENT AND TRADEMARK OFFICE

Commissioner for Patents
United States Patent and Trademark Office
P.O. Box 1450
Alexandria, VA 22313-1450
www.uspto.gov

January 31, 2011

BIRCH STEWART KOLASCH & BIRCH
PO BOX 747
FALLS CHURCH VA 22040-0747

In re Application of	: **DECISION ON PETITION**
LIN, CHIN-TRANG, et al.	
Application No. **11/907697**	: **ACCEPTANCE OF COLOR**
Filed: **10/16/2007**	: **DRAWINGS**
Attorney Docket: **2846-0515PUS1**	:

This is a decision on the Petition to Accept Color Drawings under 37 C.F.R 1.84 (a) (2), received in the United States Patent and Trademark Office (USPTO) October 16, 2007.

The petition is **GRANTED**.

A grantable petition under 37 C.F.R. 1.84(a) (2) must be accompanied by the following.

1. The fee set forth under 37 C.F.R. 1.17(h),
2. Three (3) sets of the color drawings in question, or (1) set if filed via EFS, and
3. The specification containing the following language as the first paragraph in that portion of the specification relating to the brief description of the drawings.

   "The file of this patent contains at least one drawing executed in color. Copies of this patent with color drawing(s) will be provided by the Patent and Trademark Office upon request and payment of the necessary fee."

The petition was accompanied by all of the required fees and drawings. The specification contains the appropriate language. Therefore, the petition is GRANTED.

Telephone inquires relating to this decision may be directed to the undersigned in the Office of Data Management at 571-272-4200.

/Bernadette Queen/
Quality Control Specialist
Office of Data Management
Publications Branch

UNITED STATES PATENT AND TRADEMARK OFFICE

Commissioner for Patents
United States Patent and Trademark Office
P.O. Box 1450

MAILED
MAR 15 2011
OFFICE OF PETITIONS

MANELLI DENISON & SELTER
2000 M STREET NW SUITE 700
WASHINGTON DC 20036-3307

In re Application of	:	
Myron TUPPER	:	DECISION ON PETITION
Application No. 11/907,745	:	TO MAKE SPECIAL UNDER
Filed: October 17, 2007	:	37 CFR 1.102(c)(1)
Atty. Docket No.: 62-314-DHE	:	

This is a decision on the petition under 37 CFR 1.102(c)(1), filed October 29, 2007, to make the above-identified application special based on applicant's age as set forth in MPEP §708.02, Section IV.

The petition is **GRANTED**.

A grantable petition to make an application spcial under 37 CFR 1.102(c)(1) and MPEP §708.02, Section IV: Applicant's Age must be accompanied by evidence showing that applicant is at least 65 years of age or more, such as a birth certificate or statement by applicant. No fee is required.

The instant petition includes the statement in the declaration attesting that Myron Tupper's age is 65 years of age or more. Accordingly, the above-identified application has been accorded "special" status.

Telephone inquiries concerning this decision should be directed to Robert DeWitty at 571-272-8427.

All other inquiries concerning either the examination or status of the application should be directed to the Technology Center.

This application is being forwarded to the Technology Center Art Unit 3785 for action on the merits commensurate with this decision.

Ramesh Krishnamurthy

for David Bucci
Petitions Examiner
Office of Petitions

SPE RESPONSE FOR CERTIFICATE OF CORRECTION

Paper No.: _____

DATE : 5/13/11

TO SPE OF : ART UNIT 2856

SUBJECT : Request for Certificate of Correction for Appl. No.: 11907905 Patent No.: 7882754

CofC mailroom date: 04/21/11

Please respond to this request for a certificate of correction within 7 days.

FOR IFW FILES:

Please review the requested changes/corrections as shown in the **COCIN** document(s) in the IFW application image. No new matter should be introduced, nor should the scope or meaning of the claims be changed.

Please complete the response (see below) and forward the completed response to scanning using document code **COCX**.

FOR PAPER FILES:

Please review the requested changes/corrections as shown in the attached certificate of correction. Please complete this form (see below) and forward it with the file to:

Certificates of Correction Branch (CofC)
Randolph Square – 9D10-A
Palm Location 7580
You can fax the Directors/SPE response to 571-270-9990

Lamonte Newsome

Certificates of Correction Branch

571-272-3421

Thank You For Your Assistance

The request for issuing the above-identified correction(s) is hereby:
Note your decision on the appropriate box.

- ☑ **Approved** — **All** changes apply.
- ☐ **Approved in Part** — Specify below which changes **do not** apply.
- ☐ **Denied** — State the reasons for denial below.

Comments: _____

ROBERT RAEVIS
AU 2856
Robert Raevis

HEZRON WILLIAMS
SUPERVISORY PATENT EXAMINER
TECHNOLOGY CENTER 2800
Hezron E. Williams

UNITED STATES PATENT AND TRADEMARK OFFICE

Commissioner for Patents
United States Patent and Trademark Office
P.O. Box 1450
Alexandria, VA 22313-1450
www.uspto.gov

BIRCH STEWART KOLASCH & BIRCH
PO BOX 747
FALLS CHURCH VA 22040-0747

MAILED

FEB 02 2011

OFFICE OF PETITIONS

In re Patent No. 7,852,773 :
Issue Date: December 14, 2010 :
Application No. 11/907,938 :
Filed: October 18, 2007 :
Attorney Docket No. 4459-0697PUS1 :

NOTICE

This is a notice regarding your request for acceptance of a fee deficiency submission under 37 CFR 1.28. On September 1, 1998, the Court of Appeals for the Federal Circuit held that 37 CFR 1.28(c) is the sole provision governing the time for correction of the erroneous payment of the issue fee as a small entity. **See DH Technology v. Synergystex International, Inc. 154 F.3d 1333, 47 USPQ2d 1865 (Fed. Cir. Sept. 1, 1998).**

The Office no longer investigates or rejects original or reissue applications under 37 CFR 1.56. **1098 Off. Gaz. Pat. Office 502 (January 3, 1989)**. Therefore, nothing in this Notice is intended to imply that an investigation was done.

Your fee deficiency submission under 37 CFR 1.28 is hereby **ACCEPTED**.

This application is no longer entitled to small entity status. Accordingly, all future fees paid in this application must be paid at the large entity rate.

Inquiries related to this communication should be directed to the undersigned at (571) 272-1642.

/AMW/
April M. Wise
Petitions Examiner
Office of Petitions

UNITED STATES PATENT AND TRADEMARK OFFICE

UNITED STATES DEPARTMENT OF COMMERCE
United States Patent and Trademark Office
Address: COMMISSIONER FOR PATENTS
P.O. Box 1450
Alexandria, Virginia 22313-1450
www.uspto.gov

APPLICATION NO.	FILING DATE	FIRST NAMED INVENTOR	ATTORNEY DOCKET NO.	CONFIRMATION NO.
11/907,940	10/18/2007	Bumkuk Choi	P58541	7177

8439 7590 11/05/2010
ROBERT E. BUSHNELL & LAW FIRM
2029 K STREET NW
SUITE 600
WASHINGTON, DC 20006-1004

EXAMINER
MAPLES, JOHN S

ART UNIT	PAPER NUMBER
1728	

NOTIFICATION DATE	DELIVERY MODE
11/05/2010	ELECTRONIC

Please find below and/or attached an Office communication concerning this application or proceeding.

The time period for reply, if any, is set in the attached communication.

Notice of the Office communication was sent electronically on above-indicated "Notification Date" to the following e-mail address(es):

rebushnell@aol.com
mail@rebushnell.com
info@rebushnell.com

UNITED STATES PATENT AND TRADEMARK OFFICE

Commissioner for Patents
United States Patent and Trademark Office
P.O. Box 1450
Alexandria, VA 22313-1450
www.uspto.gov

wk

NOV 05 2010

Mailed :
In re Application of : DECISION ON
Choi : PETITION
Serial No. 11/907,940 :
Filed: October 18, 2007 :
For: SECONDARY BATTERY AND METHOD OF FABRICATING THE SAME

This is a decision on the PETITION FILED UNDER 37 CFR 1.144 filed on June 24, 2010.

The Examiner initially required a restriction on January 29, 2009 between Group I, claims 1-12, drawn to a secondary battery, classified in class 429, subclass 94 and Group II, claim 13 drawn to a method of fabricating a secondary battery, classified in class 29, subclass 623.1. Applicant elected Group I, claims 1-12.

On November 19, 2009, after Applicant's amendment, the Examiner required an additional restriction between a first secondary battery, claims 1-5, classified in class 429, subclass 94 and a second second battery, classified in class 429, subclass 175. The Examiner stated that inventions I and II were directed to related products and that the related inventions were distinct. Applicant elected Group II, claims 6-12. Applicant asserts that Group I and II are obvious over each other and claims 1-12 refer to a single invention and are not distinct from each other.

To support a requirement for restriction between two or more related product inventions, or between two or more related process inventions, both two-way distinctness and reasons for insisting on restriction are necessary, i.e., separate classification, status in the art, or field of search. See MPEP § 808.02. See MPEP § 806.05(c) for an explanation of the requirements to establish two-way distinctness as it applies to inventions in a combination/subcombination relationship. For other related product inventions, or related process inventions, the inventions are distinct if

(A) the inventions as claimed do not overlap in scope, i.e., are mutually exclusive;

(B) the inventions as claimed are not obvious variants; and

(C) the inventions as claimed are either not capable of use together or can have a materially different design, mode of operation, function, or effect. See MPEP § 802.01.

MPEP 806.03 states that where the claims of an application define the same essential characteristics of a single disclosed embodiment of an invention, restriction there between should never be required. This is because the claims are not directed to distinct inventions; rather they are different definitions of the same disclosed subject matter, varying in breadth or scope of definition.

Applicant's admission that both groups are obvious over each other supports that both Groups refer to a single invention and are not distinct from each other.

Applicant further argues that the initial restriction between Group I, claims 1-12 and Group II, claims 13-18 should not be maintained. The Examiner stated that the inventions were related as process of making and product made.

A process of making and a product made by the process can be shown to be distinct inventions if either or both of the following can be shown: (A) that the process as claimed is not an obvious process of making the product and the process as claimed can be used to make another materially different product; or (B) that the product as claimed can be made by another materially different process..

The Examiner showed that the process of making can be used to make a materially different product such as a bare cell, a resin member and/or a protection circuit board thereby establishing distinct inventions. A serious burden on the Examiner may be prima facie shown by appropriate explanation of separate classification, or separate status in the art, or a different field of search as defined in MPEP § 808.02. The Examiner did show separate classification of both Groups. The Examiner has shown that the initial restriction between Group I, claims 1-12 and Group II, claims 13-18 is proper.

DECISION

The petition is **Granted-In-Part**

The Restriction between claims 1-5 and 6-12 is withdrawn and the Restriction between claims 1-12 and 13-18 is maintained.

/W. GARY JONES/
Director, Technology Center 1700
Chemical and Materials Engineering

ROBERT E. BUSHNELL & LAW FIRM
2029 K STREET NW
SUITE 600
WASHINGTON DC 20006-1004

UNITED STATES PATENT AND TRADEMARK OFFICE

Commissioner for Patents
United States Patent and Trademark Office
P.O. Box 1450
Alexandria, VA 22313-1450
www.uspto.gov

FITZPATRICK CELLA HARPER & SCINTO
1290 AVENUE OF THE AMERICAS
NEW YORK, NY 10104-3800

MAILED

AUG 25 2010

OFFICE OF PETITIONS

In re Application of	:	
Tsuyoshi SHIMOSE, et *al.*	:	
Application No. 11/908,048	:	DECISION GRANTING PETITION
Filed: September 7, 2007	:	UNDER 37 CFR 1.313(c)(2)
Attorney Docket No. **02937.000100.**	:	

This is a decision on the petition under 37 CFR 1.313(c)(2), filed August 24, 2010, to withdraw the above-identified application from issue after payment of the issue fee.

The petition is **GRANTED**.

The above-identified application is withdrawn from issue for consideration of a submission under 37 CFR 1.114 (request for continued examination). *See* 37 CFR 1.313(c)(2).

Petitioner is advised that the issue fee paid on July 22, 2010 cannot be refunded. If, however, this application is again allowed, petitioner may request that it be applied towards the issue fee required by the new Notice of Allowance.[1]

Telephone inquiries should be directed to the undersigned at (571) 272-7253.

This application is being referred to Technology Center AU 1657 for processing of the request for continued examination under 37 CFR 1.114 and for consideration of the concurrently filed information disclosure statement.

/Monica A. Graves/
Petitions Examiner, Office of Petitions

---

[1] *The request to apply the issue fee to the new Notice may be satisfied by completing and returning the new Part B – Fee(s) Transmittal Form (along with any balance due at the time of submission). Petitioner is advised that the Issue Fee Transmittal Form must be completed and timely submitted to avoid abandonment of the application.*

UNITED STATES PATENT and TRADEMARK OFFICE

COMMISSIONER FOR PATENTS
UNITED STATES PATENT AND TRADEMARK OFFICE
P.O BOX 1450
ALEXANDRIA, VA 22313-1450
www.uspto.gov

GORDON & JACOBSON, P.C.
60 LONG RIDGE ROAD
SUITE 407
STAMFORD CT 06902

MAILED

DEC 09 2010

PCT LEGAL ADMINISTRATION

In re Application of	:	DECISION ON
ESFANDIARI et al	:	
Application No.: 11/908,071	:	
Filing Date: 07 September 2007	:	PETITION UNDER
Attorney's Docket No.: CHE-002A	:	
For: DUAL PATH IMMUNOASSAY DEVICE	:	37 CFR 1.78(a)(3)

This is in response to applicants' communication "PETITION TO ACCEPT UNINTENTIONALLY DELAYED CLAIM OF PRIORITY UNDER 37 CFR 1.78(a)(3)" filed 26 October 2010.

The petition is **GRANTED**.

A petition for acceptance of a claim for late priority under 37 CFR 1.78(a)(3) is only applicable to those applications filed on or after November 29, 2000. Further, the petition is appropriate only after the expiration of the period specified in 37 CFR 1.78(a)(2)(ii). In addition, the petition under 37 CFR 1.78(a)(3) must be accompanied by:

(1) the reference required by 35 U.S.C. 120 and paragraph (a)(2) of this section to the prior filed application, unless previously submitted:

(2) the surcharge set forth in § 1.17(t); and

(3) a statement that the entire delay between the date the claim was due under 37 CFR 1.78(a)(2)(ii) of this section and the date the claim was filed was unintentional. The Director may require additional information where there is a question whether the delay was unintentional.

Regarding requirement (1) a proper reference to the prior-filed nonprovisional application has been included in an amendment to the second sentence of the specification following the title, as required by 37 CFR 1.78(a)(2)(iii).

Regarding requirement (2), the surcharge has been provided.

Regarding requirement (3), the statement that, [t]he entire delay between the date the claim was due under 35 U.S.C. 120 ... which is being filed without delay" is being construed as a statement that "the entire delay between the date the claim was due under 37 CFR 1.78(a)(2)(ii) of this section and the date the claim was filed was unintentional." Petitioner must notify the Patent and Trademark Office if such an interpretation of the statement in the petition is not correct.

Accordingly, having found that the instant petition for acceptance of an unintentionally delayed claim for the benefit of priority under 35 U.S.C.§§120 and 365(c) to the prior-filed international application satisfies the conditions of 37 CFR 1.78(a)(3), the petition is granted.

The granting of the petition to accept the delayed benefit claim to the prior-filed application under 37 CFR 1.78(a)(3) should not be construed as meaning that this application is entitled to the benefit of the prior-filed application In order for this application to be entitled to the benefit of the prior-filed applications, all other requirements under 35 U.S.C. § 120 and 37 CFR 1.78(a)(1) and (a)(2) must be met. Similarly, the fact that the corrected Filing Receipt accompanying this decision on petition includes the prior-filed application should not be construed as meaning that applicant is entitled to the claim for benefit of priority to the prior-filed application noted thereon. Accordingly, the examiner will, in due course, consider this benefit claim and determine whether this application is entitled to the benefit of the earlier filing date.

CONCLUSION

For the reasons above, the petition under 37 CFR 1.78(a)(3) is **GRANTED**.

Any questions concerning this matter may be directed to Rafael Bacares at (571) 272-3276. All other inquires concerning either the examination procedures or status of the application should be directed to the Technology Center.

This application will be forwarded to Technology Center Art Unit 1641 for examination.

BryanLin

Bryan Lin
Legal Examiner
PCT Legal Administrative Office

UNITED STATES PATENT AND TRADEMARK OFFICE

Commissioner for Patents
United States Patent and Trademark Office
P.O. Box 1450
Alexandria, VA 22313-1450
www.uspto.gov

CHALKER FLORES, LLP
14951 North Dallas Parkway, Suite 400
DALLAS TX 75254

MAILED
JUL 05 2011
OFFICE OF PETITIONS

In re Patent No. 7,928,187	:	
Issue Date: April 19, 2011	:	
Application No. 11/908,080	:	ON PETITION
Filed: September 7, 2007	:	
Attorney Docket No. SONN:1006	:	

This is a decision on the petition filed June 21, 2011, a request under 37 CFR 3.81(b) to correct the name of the assignee on the front page of the above-identified patent by way of a Certificate of Correction.

The request is **DISMISSED**.

37 CFR 3.81(b), effective June 25, 2004, reads:

> *After payment of the issue fee:* Any request for issuance of an application in the name of the assignee submitted after the date of payment of the issue fee, and any request for a patent to be corrected to state the name of the assignee, must state that the assignment was submitted for recordation as set forth in § 3.11 before issuance of the patent, and must include a request for a certificate of correction under § 1.323 of this chapter (accompanied by the fee set forth in § 1.20(a) and the processing fee set forth in § 1.17(h) of this chapter.

A request under 37 CFR 3.81(b) is to correct assignee information provided on the front page of a patent. The assignment records does not indicate that an assignment to Barbara Kofler was filed. Therefore this petition can not be granted.

Further correspondence with respect to this matter should be addressed as follows:

By mail: Mail Stop PETITIONS
Commissioner for Patents
Post Office Box 1450
Alexandria, VA 22313-1450

By hand: Customer Service Window
Mail Stop Petitions
Randolph Building
401 Dulany Street
Alexandria, VA 22314

By fax: (571) 273-8300
ATTN: Office of Petitions

Telephone inquiries related to this decision should be directed to the Kimberly Inabinet at (571) 272-4618.

/Carl Friedman/
Carl Friedman
Petitions Examiner
Office of Petitions

SPE RESPONSE FOR CERTIFICATE OF CORRECTION

Paper No.: _____

DATE : December 19, 2011

TO SPE OF : ART UNIT 2464 SPE Ricky Q. Ngo.

SUBJECT : Request for Certificate of Correction for Appl. No.: 11/908,257 Patent No.: 7,948,944 B2

Please respond to this request for a certificate of correction within 7 days.

FOR IFW FILES:

Please review the requested changes/corrections as shown in the **COCIN** document(s) in the IFW application image. No new matter should be introduced, nor should the scope or meaning of the claims be changed.

Please complete the response (see below) and forward the completed response to scanning using document code **COCX**.

FOR PAPER FILES:

Please review the requested changes/corrections as shown in the attached certificate of correction. Please complete this form (see below) and forward it with the file to:

Certificates of Correction Branch (CofC)
Randolph Square Building
2800 South Randolph Street
Arlington, VA 22206

Should the change to claim 30, which is inserting additional text, be approved as requested by applicant? See COCIN dated 12-9-2011

Antonio Johnson

Certificates of Correction Branch

(571)272-0483 Fax – (571)270-9846

Thank You For Your Assistance

The request for issuing the above-identified correction(s) is hereby:
Note your decision on the appropriate box.

- ☒ **Approved** — **All** changes apply.
- ☐ **Approved in Part** — Specify below which changes **do not** apply.
- ☐ **Denied** — State the reasons for denial below.

Comments: Amendments to claim 30 are supported by specification. See page 17, Paragraphs 59-61 of submitted specification.

_____ ____ **SPE_/RICKY NGO/**_____ **Art Unit** 2464

UNITED STATES PATENT AND TRADEMARK OFFICE

UNITED STATES DEPARTMENT OF COMMERCE
United States Patent and Trademark Office
Address: COMMISSIONER FOR PATENTS
P.O. Box 1450
Alexandria, Virginia 22313-1450
www.uspto.gov

APPLICATION NO.	FILING DATE	FIRST NAMED INVENTOR	ATTORNEY DOCKET NO.	CONFIRMATION NO.
11/908,260	09/09/2008	Oliver Hauser	3027585 US01	1946

44331 7590 12/23/2010
HISCOCK & BARCLAY, LLP
2000 HSBC PLAZA
100 Chestnut Street
ROCHESTER, NY 14604-2404

EXAMINER
WAX, ROBERT A

ART UNIT	PAPER NUMBER
1615	

MAIL DATE	DELIVERY MODE
12/23/2010	PAPER

Please find below and/or attached an Office communication concerning this application or proceeding.

The time period for reply, if any, is set in the attached communication.

UNITED STATES PATENT AND TRADEMARK OFFICE

Commissioner for Patents
United States Patent and Trademark Office
P.O. Box 1450
Alexandria, VA 22313-1450
www.uspto.gov

DEC 2 3 2010

HISCOCK & BARCLAY, LLP
2000 HSBC PLAZA
100 Chestnut Street
ROCHESTER NY 14604-2404

In re Application of	:	
HAUSER, OLIVER	:	DECISION ON REQUEST TO
Application No. 11/908,260	:	PARTICIPATE IN PATENT
Filed: September 09, 2008	:	PROSECUTION HIGHWAY
Attorney Docket No. 3027585 US01	:	PILOT PROGRAM AND PETITION
	:	TO MAKE SPECIAL UNDER
	:	37 CFR 1.102(d)

This is a decision on the request to participate in the Patent Prosecution Highway (PPH) pilot program and the petition under 37 CFR 1.102(d), filed September 21, 2010, to make the above-identified application special.

The request and petition are **Granted**.

A grantable request to participate in the PPH pilot program and petition to make special require:

(1) The U.S. application must validly claim priority under 35 U.S.C. 119(a) to one or more applications filed in the DPMA;
(2) All the claims in the U.S. application must sufficiently correspond or be amended to sufficiently correspond to the allowable/patentable claim(s) in the DPMA application(s);
(3) Examination of the U.S. application has not begun;
(4) Applicant must submit a copy of all the office actions from each of the DPMA application(s) containing the allowable/patentable claim(s) along with an English translation thereof and a statement that the English translation is accurate; and
(5) Applicant must submit an IDS listing the documents cited by the DPMA examiner in the DPMA office action along with copies of documents except U.S. patents or U.S. patent application publications.

The request to participate in the PPH program and petition comply with the above requirements. Accordingly, the above-identified application has been accorded "special" status.

Telephone inquiries concerning this decision should be directed to Ram R. Shukla at 571-272-0735.

All other inquiries concerning the examination or status of the application should be directed to Patent Application Information Retrieval (PAIR) system at the http://www.uspto.gov/ebc/index.html.

The application is being forwarded to the examiner for action on the merits commensurate with this decision.

Ram R. Shukla, Ph.D.
Supervisory Patent Examiner
TC 1600

RAM R. SHUKLA, PH.D.
SUPERVISORY PATENT EXAMINER

SPE RESPONSE FOR CERTIFICATE OF CORRECTION

DATE : 1/13/2011 **Paper No.:** ——

TO SPE OF : ART UNIT 2821 CofC mailroom date 1/5/2011

SUBJECT : Request for Certificate of Correction for Appl. No.: 11908274 Patent No.: 7859193 B2

Please respond to this request for a certificate of correction within 7 days.

FOR IFW FILES:

Please review the requested changes/corrections as shown in the **COCIN** document(s) in the IFW application image. No new matter should be introduced, nor should the scope or meaning of the claims be changed.

Please complete the response (see below) and forward the completed response to scanning using document code **COCX**.

FOR PAPER FILES:

Please review the requested changes/corrections as shown in the attached certificate of correction. Please complete this form (see below) and forward it with the file to:

Certificates of Correction Branch (CofC)
Randolph Square – 9D10-A
Palm Location 7580

Virginia Tolbert
Certificates of Correction Branch
571-272-0460

Thank You For Your Assistance

The request for issuing the above-identified correction(s) is hereby:
Note your decision on the appropriate box.

- ☑ **Approved** — All changes apply.
- ☐ **Approved in Part** — Specify below which changes **do not** apply.
- ☐ **Denied** — State the reasons for denial below.

Comments: _____

Douglas K. Owens

UNITED STATES PATENT AND TRADEMARK OFFICE

Commissioner for Patents
United States Patent and Trademark Office
Washington, D.C. 20231
www.uspto.gov

TAROLLI, SUNDHEIM, COVELL & TUMMINO, LLP
1300 EAST NINTH STREET
SUITE 1700
CLEVELAND OH 44114

MAILED
DEC 13 2011
PCT LEGAL ADMINISTRATION

In re Application of: BERDIS, et al. :
U.S. Application No.: 11/908,306 :
PCT Application No.: PCT/US2006/009364 :
Int'l Filing Date: 15 March 2006 : DECISION
Priority Date: 16 March 2005 :
Attorney's Docket No.: CWR-7493PCT/US :
For: SELECTIVE INHIBITORS OF TRANSLESION :
DNA REPLICATION :

This decision is issued in response to the "PETITION UNDER 37 C.F.R. 1.53" filed 29 September 2011, which seeks correction of the "Filing or 371(c) Date" from 20 September 2007 to 11 September 2007. The petition is being considered pursuant to 37 CFR 1.181. No petition fee is required. The $400.00 petition fee paid will be refunded to applicant.

BACKGROUND

On 11 September 2007, applicant initiated the present national stage application by electronically submitting, among other materials, a transmittal letter seeking entry into the U.S. national stage for PCT/US2006/009364, and payment of the basic national fee.

On 20 September 2007, applicant electronically filed an executed declaration of the inventors.

On 06 November 2008, the United States Designated/Elected Office (DO/EO/US) mailed a "Notification Of Acceptance" (Form PCT/DO/EO/903) indicating that the requirements of 35 U.S.C. 371(c)(1), (c)(2), and (c)(4) were satisfied as of 20 September 2007. On the same date, a filing receipt was issued identifying the "Filing Or 371(c) Date" as 20 September 2007.

On 22 November 2011, applicants filed the petition considered herein. The petition seeks the according of a "filing date of September 11, 2007."

DISCUSSION

The present request seeks to correct the "Filing Or 371(c) Date" from 20 September 2007, the date on which applicant filed the declaration satisfying the requirement of 35 U.S.C. 371(c)(4), to 11 September 2007, the date on which applicants initiated the present national stage application. However, the proper "Filing Or 371(c) Date" for a U.S. national stage application is

the date on which the requirements of 35 U.S.C. 371(c)(1), (c)(2), and (c)(4) are all satisfied, not the date on which the national stage is initiated. **Per** MPEP § 1893.03(b):

> The "Application Filing Date" field formerly displayed in PAIR was changed to "Filing or 371(c) Date" to clearly indicate that for international applications that enter the national stage under 35 U.S.C. 371, the information displayed in this field is the date of receipt of the 35 U.S.C. 371(c)(1), (c)(2) and (c)(4) requirements. Applicants are quite often confused as to the true filing date and will ask for corrected filing receipts thinking that the information thereon is wrong. This explanation should offer some clarity. For most legal purposes, the filing date is the PCT international filing date.

Accordingly, the 20 September 2007 "Filing Or 371(c) Date" set forth on the filing receipt issued herein is proper.

CONCLUSION

Based on the above, the petition under 37 CFR 1.181 filed 29 September 2011 is **DISMISSED** without prejudice.

The "Filing Or 371(c) Date" for the present application remains 20 September 2007, the date on which applicant filed the declaration satisfying the requirement of 35 U.S.C. 371(c)(4).

Derek A. Putonen
Attorney Advisor
Office of PCT Legal Administration
Tel: (571) 272-3294

UNITED STATES PATENT AND TRADEMARK OFFICE

Commissioner for Patents
United States Patent and Trademark Office
P.O. Box 1450
Alexandria, VA 22313-1450
www.uspto.gov

MAILED
MAR 13 2012
OFFICE OF PETITIONS

ELI LILLY & COMPANY
PATENT DIVISION
P.O. BOX 6288
INDIANAPOLIS IN 46206-6288

In re Patent No. 8,093,244
Issued: January 10, 2012
Application No. 11/908,416
Filing or 371 Date: November 19, 2008
Dkt. No.: X-17667

: DECISION ON PATENT TERM
: ADJUSTMENT and NOTICE OF INTENT
: TO ISSUE CERTIFICATE OF
: CORRECTION
:

This is a decision on the petition filed on February 27, 2012 requesting that the patent term adjustment indicated on the above-identified patent be corrected to indicate that the term of the above-identified patent is extended or adjusted by 721 days.

The petition to correct the patent term adjustment indicated on the above-identified patent is **GRANTED TO THE EXTENT INDICATED HEREIN**.

The above-identified application issued as U.S. Pat. No. 8,093,244 on January 10, 2012. The patent issued with a patent term adjustment of 658 days. The instant request for reconsideration of patent term adjustment was timely filed February 27, 2012. Patentees contest the reduction of 63 days assessed in connection with post allowance submissions.

Patentees' argue that the submission of the Rule 1.48 request is not a failure to engage in reasonable efforts to conclude prosecution or processing and that the submission of the supplemental application data sheet was requested by the examiner. Patentees' arguments have been carefully reviewed but are not found persuasive. The submission of amendments (or other papers) after an application is allowed may cause substantial interference with the patent issue process. Certain papers filed after allowance are not considered to be a failure to engage in reasonable efforts to conclude processing or examination of an application. See, Clarification of 37 CFR 1.704(c)(10) – Reduction of Patent Term Adjustment for Certain Types of Papers Filed After a Notice of Allowance has been Mailed, 1247 Off. Gaz. Pat. Office 111 (June 26, 2001). The submission of the following papers after a "Notice of Allowance" is **not** considered a failure to engage in reasonable efforts to conclude processing or examination of an application: (1) Fee(s) Transmittal (PTOL-85B); (2) Power of Attorney; (3) Power to Inspect; (4) Change of Address; (5) Change of Status (small/not small entity status); (6) a response to the examiner's reasons for allowance or a request to correct an error or omission in the "Notice of Allowance" or "Notice of Allowability;" and (7) letters related to government interests (e.g., those between NASA and the Office). Papers that **will be** considered a failure to engage in reasonable efforts to conclude processing or examination of an application include: (1) a request for a refund; (2) a status letter; (3) amendments under 37 CFR 1.312; (4) late priority claims; (5) a certified copy of

a priority document; (6) drawings; (7) letters related to biologic deposits; and (8) oaths or declarations.

A Rule 1.48 request and a supplemental application data sheet were filed on November 9, 2011. In accordance with 37 CFR 1.704(c)(10), the application is subject to a reduction of 10 days, the reduction having commenced on November 9, 2011, the date that the post allowance submissions were filed, and ended November 18, 2011, the date that a response to the post allowance submissions was mailed.

In view thereof, the patent is entitled to an overall adjustment of 711 days (721 days of adjustment pursuant to 37 CFR 1.703 *less* 10 days of applicant day pursuant to 37 CFR 1.704).

The Office will *sua sponte* issue a certificate of correction. Pursuant to 37 CFR 1.322, the Office will not issue a certificate of correction without first providing assignee or patentee an opportunity to be heard. Accordingly, patentees are given **one (1) month or thirty (30) days**, whichever is longer, from the mail date of this decision to respond. No extensions of time will be granted under § 1.136. See 37 CFR 1.323(a)(4).

The required $200.00 fee set forth in 37 CFR 1.18(e) has been charged to the authorized deposit account. No additional fees are required.

The application is being forwarded to the Certificates of Corrections Branch for issuance of a certificate of correction. The Office will issue a certificate of correction indicating that the term of the above-identified patent is extended or adjusted by 711 days.

Nothing in this decision shall be construed as a waiver of the requirement of 35 U.S.C. 154(b)(4) that any civil action by an applicant dissatisfied with a determination made by the Director under 35 U.S.C. 154(b)(3) be filed in the United States District Court for the District of Columbia within 180 days after the grant of the patent.

Telephone inquiries specific to this matter should be directed to the undersigned at (571) 272-3205.

/ALESIA M. BROWN/

Alesia M. Brown
Attorney Adviser
Office of Petitions

Enclosure: Copy of DRAFT Certificate of Correction

UNITED STATES PATENT AND TRADEMARK OFFICE

CERTIFICATE OF CORRECTION

PATENT : 8,093,244

DATED : January 10, 2012 **DRAFT**

INVENTOR(S) : Diaz, et al.

It is certified that error appears in the above-identified patent and that said Letters Patent is hereby corrected as shown below:

On the cover page,

[*] Notice: Subject to any disclaimer, the term of this patent is extended or adjusted under 35 USC 154(b) by 658 days

Delete the phrase "by 658 days" and insert – by 711 days--

UNITED STATES PATENT AND TRADEMARK OFFICE

Commissioner for Patents
United States Patent and Trademark Office
P.O. Box 1450
Alexandria, VA 22313-1450
www.uspto.gov

ALLERGAN, INC.
2525 DUPONT DRIVE, T2-7H
IRVINE CA 92612-1599

MAILED
SEP 21 2011
OFFICE OF PETITIONS

In re Application of	:	
Fernandez et al.	:	
Application No.: 11/908438	:	ON PETITION
Filing or 371(c) Date: 09/12/2007	:	
Attorney Docket Number:	:	
17796PCT-US(BOT)	:	

This is a decision on the Petition for Revival of an Application for Patent Abandoned Unintentionally Under 37 C.F.R. § 1.137(b), filed August 26, 2011.

This Petition is hereby **granted**.

The above-identified application became abandoned for failure to timely reply to the non-final Office action, mailed October 5, 2011. The Office action set a three (3) period for reply. Extensions of time under 37 CFR 1.136(a) were available. No reply having been received, the application became abandoned on January 6, 2011. A Notice of Abandonment was mailed May 5, 2011.

The petition satisfies the conditions for revival pursuant to the provisions of 37 CFR 1.137(b) in that the petition includes (1) the reply in the form of an Amendment; (2) the petition fee; and (3) the required statement of unintentional delay. Accordingly, the reply is accepted as having been unintentionally delayed.

This application is being referred to Technology Center Art Unit 1656 for processing of the response to the Office action filed with the petition in the normal course of business.

Telephone inquiries concerning this decision should be directed to the undersigned at (571) 272-3232.

/DLW/

Derek L. Woods
Attorney
Office of Petitions

UNITED STATES PATENT AND TRADEMARK OFFICE

Commissioner for Patents
United States Patent and Trademark Office
P.O. Box 1450
Alexandria, VA 22313-1450
www.uspto.gov

HOLTZ, HOLTZ, GOODMAN & CHICK PC
220 Fifth Avenue
16TH Floor
NEW YORK NY 10001-7708

MAILED

NOV 10 2010

OFFICE OF PETITIONS

In re Patent No. 7,739,894 :
Issue Date: June 22, 2010 :
Application No. 11/908,488 : DECISION ON PETITION
Filed: September 12, 2007 :
Attorney Docket No. 07569/LH :

This is a decision on the Petition Under 37 CFR 3.81(b) To Correct The Assignees In Patent and Supplemental Petition Under 37 CFR 3.81(b) To Correct The Assignees In Patent, filed September 17, 2010, requesting correction on the Title Page of the subject patent to accept the omission of the second assignee's name and residence. A completed Certificate of Correction Form (PTO/SB/44) was submitted with Petition.

The petition under 37 CFR §3.81(b) is **GRANTED**.

Petitioner urges that the present Petition was submitted to accept the omission of the second assignee's name and residence on the previously submitted PTOL 85B and such error was inadvertent. Accordingly, petitioner requests that a Certificate of Correction (PTO/SB/44) be issued to add the omitted second assignee's name and residence to the Title Page of the Letters Patent.

37 CFR 3.81(b), effective June 25, 2004, reads:

> *After payment of the issue fee:* Any request for issuance of an application in the name of the assignee submitted after the date of payment of the issue fee, and any request for a patent to be corrected to state the name of the assignee, must state that the assignment was submitted for recordation as set forth in § 3.11 before issuance of the patent, and must include a request for a certificate of correction under § 1.323 of this chapter (accompanied by the fee set forth in § 1.20(a) and the processing fee set forth in § 1.17(i) of this chapter.

The requisite $130.00 processing fee (Fee Code 1464), as set forth under 37 CFR 1.17(i), has been submitted. However, the $100.00 fee (Fee Code 1811), as set forth under 37 CFR 1.20(a), was accompanied deposit account authorization to charge any required fees. As such, the fee has been charged as authorized. Further, Office assignment records are consistent with the requested correction. Accordingly, since the Petition complies with the provisions of 37 CFR 3.81(b), it is appropriate for the Office to issue a Certificate of Correction in accordance with the content of the Form PTO/SB/44 submitted with the Petition.

Inquiries related this communication should be directed to the undersigned at (571)272-3213.

Any questions concerning the issuance of a Certificate of Correction should be directed to the Certificates of Correction Branch at (571) 272-4200.

This matter is being referred to the Certificates of Correction Branch for processing of a Certificate of Correction in U.S. Patent No. 7,739,894.

Cheryl Gibson-Baylor

Cheryl Gibson-Baylor
Petitions Examiner
Office of Petitions

UNITED STATES PATENT AND TRADEMARK OFFICE

Commissioner for Patents
United States Patent and Trademark Office
P.O. Box 1450
Alexandria, VA 22313-1450
www.uspto.gov

DICKINSON WRIGHT PLLC
2600 WEST BIG BEAVER ROAD
SUITE 300
TROY MI 48084-3312

MAILED

DEC 16 2011

OFFICE OF PETITIONS

In re Application of	:	
Selvini et al.	:	
Application No. 11/908512	:	
Filing or 371(c) Date: 12/06/2007	:	ON PETITION
Attorney Docket Number:	:	
JC0221US (21407-140)	:	

This is a decision on the petition under 37 CFR 1.137(b), filed November 16, 2011, to revive the above-identified application. The delay in treating this petition is regretted.

This Petition is hereby **dismissed**.

Any further petition to revive the above-identified application must be submitted within TWO (2) MONTHS from the mail date of this decision. Extensions of time under 37 CFR 1.136(a) are permitted. The reconsideration request should include a cover letter entitled "Request for Reconsideration of Petition under [insert the applicable code section]". This is **not** final agency action within the meaning of 5 U.S.C. § 704.

Background

The above-identified application became abandoned for failure to timely and properly reply to the final Office action, mailed December 16, 2009. The Office action set a three (3) month period for reply from the mail date of the Office action. Extensions of time were available under 37 CFR 1.136(a). No reply having been received, the application became abandoned on March 17, 2010. A Notice of Abandonment was mailed July 19, 2010.

Applicant files the present petition, and an Amendment in reply to the Office action.

Applicable law, Rules and MPEP

A grantable petition under 37 CFR 1.137(b) must be accompanied by: (1) the required reply, unless previously filed; (2) the petition fee as set forth in 37 CFR 1.17(m); (3) a statement that the entire delay in filing the required reply from the due date for the reply until the filing of a

grantable petition pursuant to 37 CFR 1.137(b) was unintentional; and (4) any terminal disclaimer (and fee as set forth in 37 CFR 1.20(d)) required by 37 CFR 1.137(d). Where there is a question as to whether either the abandonment or the delay in filing a petition under 37 CFR 1.137 was unintentional, the Director may require additional information. See MPEP 711.03(c)(II)(C) and (D). The instant petition lacks item(s) (1).

The present petition and amendment

As to iten (1), the Examiner has reviewed the Amendment filed with the petition, and concluded that the Amendment fails to place the application in condition for allowance.

As to item (3), 37 CFR 1.137(b)(3) requires a statement that "the entire delay in filing the required reply from the due date for the reply until the filing of a grantable petition pursuant to 37 CFR 1.137(b) was unintentional." Since the statement appearing in the petition varies from the language required by 37 CFR 1.137(b)(3), the statement is being construed as the required statement. Petitioner must notify the Office if this is **not** a correct reading of the statement appearing in the petition.

Further correspondence with respect to this matter should be addressed as follows:

By mail: Director for Patents
PO Box 1450
Alexandria, VA 22313-1450

By FAX: (571) 273-8300
Attn: Office of Petitions

By hand: Customer Service Window
Randolph Building
401 Dulany Street
Alexandria, VA 22314

Inquiries regarding the Amendment should be directed to the Examiner. Telephone inquiries concerning this petition Decision should be directed to the undersigned at (571) 272-3232.

/DLW/

Derek L. Woods
Attorney
Office of Petitions

UNITED STATES PATENT AND TRADEMARK OFFICE

Commissioner for Patents
United States Patent and Trademark Office
P.O. Box 1450
Alexandria, VA 22313-1450
www.uspto.gov

DICKINSON WRIGHT PLLC
2600 WEST BIG BEAVER ROAD
SUITE 300
TROY MI 48084-3312

MAILED

FEB 24 2012

OFFICE OF PETITIONS

In re Application of	:	
Selvini et al.	:	
Application No. 11/908512	:	ON PETITION
Filing or 371(c) Date: 12/06/2007	:	
Attorney Docket Number:	:	
JC0221US (21407-140)	:	

This is a decision on the petition under the unintentional provisions of 37 CFR 1.137(b), filed February 16, 2012, to revive the above-identified application.

The petition is **GRANTED**.

The application became abandoned for failure to timely file a reply within the meaning of 37 CFR 1.113 to the final Office action of December 16, 2009. The proposed reply required for consideration of a petition to revive must be a Notice of Appeal (and appeal fee required by 37 CFR 41.20(b)(2), an amendment that *prima facie* places the application in condition for allowance, a Request for Continued Examination and submission (37 CFR 1.114), or the filing of a continuing application under 37 CFR 1.53(b). See MPEP 711.03(c)(III)(A)(2). Accordingly, the date of abandonment of this application is March 17, 2010.

The petition satisfies the requirements of 37 CFR 1.137(b) in that petitioner has supplied (1) the reply in the form of a Request for Continued Examination (RCE) and fee (and the submission required by 37 CFR 1.114); (2) the petition fee; and (3) a proper statement of unintentional delay.

Telephone inquiries concerning this decision should be directed to the undersigned at (571) 272-3232.

The application is being referred to Technology Center AU 3612 for processing of the RCE, and for appropriate action on the Amendment by the Examiner in the normal course of business.

/DLW/

Derek L. Woods
Attorney
Office of Petitions

UNITED STATES PATENT AND TRADEMARK OFFICE

Commissioner for Patents
United States Patent and Trademark Office
P.O. Box 1450
Alexandria, VA 22313-1450
www.uspto.gov

OCCHIUTI ROHLICEK & TSAO LLP
10 FAWCETT STREET
CAMBRIDGE, MA 02138

MAILED
NOV 30 2010
OFFICE OF PETITIONS

Applicant: Gerald Hehenberger
Appl. No.: 11/908,570
International Filing Date: March 9, 2006
Title: Method and Device For Breaking The Rotor of a Wind Energy Plant
Attorney Docket: 30020.229US1
Pub. No.: 2009/0304506 A1
Pub. Date: December 10, 2009

This is a decision on the requests for a corrected patent application publication under 37 CFR 1.221(b), received on February 12, 2010, for the above-identified application.

The request is granted.

The corrected patent application publication will be published in due course, unless the patent issues before the application is republished.

The corrected patent application publication will be published in due course, unless the patent issues before the application is republished.

It would greatly benefit the Office if **applicant did not provide copies of papers**, which were previously submitted and/or **a complete copy of the pre-grant publication**, as it unnecessarily increases the cost to the Office. See 37 CFR 1.4(b). A request for corrected publication need only point out what was printed incorrectly in the application, where the error occurs in the publication and where the correct text or drawing is found in the application papers, Marked up Relevant copies of the applications papers and the pre-grant publication may facilitate processing of the request, where it is not readily apparent where the error occurs. If it is not clear why the error is a material error, further explanation may be warranted.

A guide for filing a request for a Pre-Grant Publication, such as a request for republication, may be found on the link below:

http://www.uspto.gov/patents/process/file/efs/guidance/index.jsp

http://www.uspto.gov/ebc/portal/efs/pgpub_quickstart.pdf

Inquiries relating to this matter may be directed to Mark Polutta at (571) 272-7709.

Mark Polutta
Senior Legal Advisor
Office of Patent Legal Administration
Office of the Deputy Commissioner
for Patent Examination Policy

UNITED STATES PATENT AND TRADEMARK OFFICE

Commissioner for Patents
United States Patent and Trademark Office
P.O. Box 1450
Alexandria, VA 22313-1450
www.uspto.gov

FITZPATRICK CELLA HARPER & SCINTO
1290 Avenue of the Americas
NEW YORK NY 10104-3800

MAILED
OCT 31 2011
OFFICE OF PETITIONS

In re Application of	:	
Tomoya Sato, et al.	:	
Application No. 11/908,578	:	DECISION GRANTING PETITION
Filed: September 13, 2007	:	UNDER 37 CFR 1.313(c)(2)
Attorney Docket No. 00862.117674.	:	

This is a decision on the petition under 37 CFR 1.313(c)(2), filed, October 28, 2011 to withdraw the above-identified application from issue after payment of the issue fee.

The petition is **GRANTED**.

The above-identified application is withdrawn from issue for consideration of a submission under 37 CFR 1.114 (request for continued examination). *See* 37 CFR 1.313(c)(2).

Petitioner is advised that the issue fee paid on September 9, 2011 cannot be refunded. If, however, this application is again allowed, petitioner may request that it be applied towards the issue fee required by the new Notice of Allowance.[1]

Telephone inquiries should be directed to Terri Johnson at (571) 272-2991.

This application is being referred to Technology Center AU 2625 for processing of the request for continued examination under 37 CFR 1.114 and for consideration of the concurrently filed information disclosure statement.

/Terri Johnson/
Terri Johnson
Petitions Examiner
Office of Petitions

[1] *The request to apply the issue fee to the new Notice may be satisfied by completing and returning the new Part B – Fee(s) Transmittal Form (along with any balance due at the time of submission). Petitioner is advised that the Issue Fee Transmittal Form* ***must*** *be completed and timely submitted to avoid abandonment of the application.*

UNITED STATES PATENT AND TRADEMARK OFFICE

Commissioner for Patents
United States Patent and Trademark Office
P.O. Box 1450
Alexandria, VA 22313-1450
www.uspto.gov

RONALD E. GREIGG
GREIGG & GREIGG P.L.L.C.
1423 POWHATAN STREET, UNIT ONE
ALEXANDRIA VA 22314

MAILED

DEC 12 2011

OFFICE OF PETITIONS

In re Application of :
Kerst et al. :
Application No. 11/908,673 : ON PETITION
Filed: September 14, 2007 :
Attorney Docket No. R.311585 :

This is a decision on the petition, filed December 1, 2011, under 37 CFR 1.183 to waive 37 CFR 1.131 to the extent that it requires that all of the named inventors execute the declaration filed thereunder.

The petition under 37 CFR 1.183 is **Dismissed**.

Any request for reconsideration should be filed within **TWO MONTHS** of the mailing date of this decision in order to be considered timely. 37 CFR 1.181(f). This time period may not be extended pursuant to 37 CFR 1.136.

The above-identified application was filed on September 14, 2007. Applicants submitted a 37 CFR 1.63 declaration on September 14, 2007. A non-final Office action was mailed on June 1, 2011. This office action set a shortened statutory period for reply of three months, with extensions of time obtainable under 37 CFR 1.136(a).

In response, on December 1, 2011, applicants submitted a response, including a declaration under 37 CFR 1.131. The declaration under 37 CFR 1.131 was executed by inventors Kerst and Suenderhauf. Petitioner states that inventor Schulz is deceased and a declaration for the legal representative has been unable to be signed and returned to be submitted with the reply to the outstanding action.

Petitioner's arguments have been considered, but determined to be unpersuasive. Pursuant to MPEP 715.04, affidavits or declarations to overcome a rejection of a claim or claims must be made by the inventor or inventors of the subject matter of the rejected claim(s), a party qualified under 37 CFR 1.42, 1.43, or 1.47, or the assignee or other party in interest when it is not possible to produce the affidavit or declaration of the inventor(s). Thus, where all of the named inventors of a pending application are not inventors of every claim of the application, any affidavit under 37 CFR 1.131 could be signed by only the inventor(s) of the subject matter of the rejected claims. Where one or more of the named inventors of the subject matter of the rejected claim(s)

(who had originally signed the oath or declaration for patent application under 37 CFR 1.63) is now unavailable to sign an affidavit or declaration under 37 CFR 1.131, the affidavit or declaration under 37 CFR 1.131 may be signed by the remaining joint inventors provided a petition under 37 CFR 1.183 requesting waiver of the signature of the unavailable inventor be submitted with the affidavit or declaration under 37 CFR 1.131. Proof that the non-signing inventor is unavailable or cannot be found similar to the proof required for a petition under 37 CFR 1.47 must be submitted with the petition under 37 CFR 1.183 (see MPEP § 409.03(d)).

Petitioner has failed to show or provide adequate proof that a diligent effort was made to reach or locate the legal representative of inventor Schulz. Petitioner has failed to state what efforts have been made to locate the legal representative. Where inability to find or locate non-signing inventor (s) or legal representative is alleged, a statement of facts should be submitted that fully describes the exact facts which are relied on to establish that a *diligent effort* was made to locate the inventor or legal representative. The statement(s) of facts must be signed, where at all possible, by a person having *firsthand knowledge* of the facts recited therein. Statements based on hearsay, will not normally be accepted. Petitioner should, at the very least, conduct a search of the regional or national registry(s). Additionally, petitioner should state whether he has access to inventors' personnel records and, if so, what does inspection of the records reveal as to a current address, forwarding address, or an address of the nearest living relative? What does inspection of the phone directories for those address locations reveal? Where the declaration under 37 CFR 131 is mailed to the last known address of the legal representative and is returned and all other attempts to locate or reach the inventor or legal representative, e.g., through personnel records, co-workers, E-mail, the Internet or the telephone, etc., continue to fail, then applicant will have established that the legal representative cannot be reached after diligent effort or has refused to join in the declaration. The results of such search should be made in any future petition for reconsideration. Copies of the results of the search must be referred to in any renewed petition. See MPEP 409.03(d). If the inventors are located, then a copy of the 37 CFR 1.131 affidavit or declaration, as well as a copy of the proof of service on that person will be required. It is important that the forthcoming communication contain, with accompanying documentation, statements of fact as opposed to conclusions. If there is an express oral refusal, a statement from the person to whom that refusal was made should be made of record.

Further correspondence with respect to this matter should be addressed as follows:

By Mail: Mail Stop PETITION
Commissioner for Patents
P. O. Box 1450

Alexandria, VA 22313-1450

By hand: U. S. Patent and Trademark Office
Customer Service Window, Mail Stop Petitions
Randolph Building
401 Dulany Street

Alexandria, VA 22314

By facsimile: **(571) 273-8300**
Attn: Office of Petitions

By internet: EFS-Web
www.uspto.gov/ebc/efs_help.html
(for help using EFS-Web call the
Patent Electronic Business Center
at (866) 217-9197)

Telephone inquiries concerning this decision should be directed to the undersigned at (571) 272-3215.

Charlema Grant

Charlema Grant
Attorney Advisor
Office of Petitions

UNITED STATES PATENT AND TRADEMARK OFFICE

Commissioner for Patents
United States Patent and Trademark Office
P.O. Box 1450
Alexandria, VA 22313-1450
www.uspto.gov

MAILED
MAR 12 2012
OFFICE OF PETITIONS

RONALD E. GREIGG
GREIGG & GREIGG P.L.L.C.
1423 POWHATAN STREET, UNIT ONE
ALEXANDRIA VA 22314

In re Application of
Kerst et al.
Application No. 11/908,673
Filed: September 14, 2007
Attorney Dkt: R.311585
For: FUEL INJECTION VALVE FOR INTERNAL COMBUSTION ENGINES

DECISION ON PETITION

Papers have been filed on February 13, 2012, in response to a Decision Under 37 CFR 1.183 to waive 37 CFR 1.131 to the extent that it requires that all of the named inventors execute the declaration filed thereunder mailed December 12, 2011, and include a Declaration that is signed by the previously non-signing legal representatives for deceased inventor Roland Schulz, in compliance with 37 CFR 1.131.

The petition is **DISMISSED AS MOOT**.

In view of the joinder of the legal representatives, further consideration under § 1.183 is not necessary.

This application is being referred to art unit 3752 for further processing in the normal course of business.

Telephone inquiries should be directed to the undersigned at (571) 272-3215.

Charlema Grant
Attorney Advisor
Office of Petitions

UNITED STATES PATENT AND TRADEMARK OFFICE

Commissioner for Patents
United States Patent and Trademark Office
P.O. Box 1450
Alexandria, VA 22313-1450
www.uspto.gov

CHOATE, HALL & STEWART/CITRIX SYSTEMS, INC.
TWO INTERNATIONAL PLACE
BOSTON MA 02110

MAILED

NOV 26 2010

OFFICE OF PETITIONS

In re Application of	:	
John Kenneth GILBERT, et al	:	
Application No. 11/908,678	:	DECISION ON PETITION
Filed: September 14, 2007	:	TO WITHDRAW
Attorney Docket No. 2006982-0005	:	FROM RECORD

This is a decision on the Request to Withdraw as attorney or agent under 37 C.F.R. § 1.36(b) filed November 10, 2010.

The request is **NOT APPROVED**.

The Office will no longer approve requests from practitioners to withdraw from applications where the requesting practitioner is acting, or has acted, in a representative capacity pursuant to 37 CFR 1.34. In these situations, the practitioner is responsible for the correspondence the practitioner files in the application while acting in a representative capacity. As such, there is no need for the practitioner to obtain the Office's permission to withdraw from representation. However, practitioners acting in a representative capacity, like practitioners who have a power of attorney in the application, remain responsible for noncompliance with 37 CFR 1.56, as well as 37 CFR 10.18, with respect to documents they file.

A review of the file record indicates that Brenda Herschbach Jarrell does not have power of attorney in this patent application. See 37 C.F.R. § 10.40. Accordingly, the request to withdraw under 37 C.F.R. § 1.36(b) is not applicable.

All future communications from the Office will continue to be directed to the above-identified address until otherwise properly notified.

Telephone inquires concerning this decision should be directed to the undersigned at (571) 272-6735.

/DCG/
Diane C. Goodwyn
Petitions Examiner
Office of Petitions

SPE RESPONSE FOR CERTIFICATE OF CORRECTION

DATE : 11/14/11

TO SPE OF : ART UNIT 2821

SUBJECT : Request for Certificate of Correction for Appl. No.: 11908678 Patent No.: 7982686

CofC mailroom date: 11/08/11

Please respond to this request for a certificate of correction within 7 days.

FOR IFW FILES:

Please review the requested changes/corrections as shown in the **COCIN** document(s) in the IFW application image. No new matter should be introduced, nor should the scope or meaning of the claims be changed.

Please complete the response (see below) and forward the completed response to scanning using document code **COCX**.

FOR PAPER FILES:

Please review the requested changes/corrections as shown in the attached certificate of correction. Please complete this form (see below) and forward it with the file to:

Certificates of Correction Branch (CofC)
Randolph Square – 9D10-A
Palm Location 7580
You can fax the Directors/SPE response to 571-273-3421

Note: **Should the changes to the Inventorship be approved?**

Lamonte Newsome

Certificates of Correction Branch

571-272-3421

Thank You For Your Assistance

The request for issuing the above-identified correction(s) is hereby:
Note your decision on the appropriate box.

SPE RESPONSE FOR CERTIFICATE OF CORRECTION

☑ **Approved** — **All** changes apply.

☐ **Approved in Part** — Specify below which changes **do not** apply.

☐ **Denied** — State the reasons for denial below.

Comments: Certificate of Correction regarding inventorship has been approved.

Jacob Choi
Supervisory Patent Examiner
Technology Center 2800

SPE

2821

Art Unit

UNITED STATES PATENT AND TRADEMARK OFFICE

Commissioner for Patents
United States Patent and Trademark Office
P.O. Box 1450
Alexandria, VA 22313-1450
www.uspto.gov

MAILED
SEP 23 2011
OFFICE OF PETITIONS

BARNES & THORNBURG LLP
11 SOUTH MERIDIAN
INDIANAPOLIS IN 46204

In re Application
Xu, et al.
Application No. 11/908,695
Filing or 371(c) Date: September 14, 2007
Dkt. No.: 20150-204046

: PATENT TERM ADJUSTMENT

This is in response to the application for patent term adjustment filed September 19, 2011. This matter is being properly treated under 37 CFR 1.705(b) as an application for patent term adjustment.

The application for patent term adjustment is GRANTED TO THE EXTENT INDICATED HEREIN.

The Notice of Allowance mailed June 27, 2011 indicates that that the application is entitled to a patent term adjustment of 118 days. The instant application for patent term adjustment was timely filed in accordance with 37 CFR 1.705(b). Applicants assert that the instant application is entitled to an additional 46 days under 37 CFR 1.703(a)(3) with respect to the mailing of the Notice of Allowance on June 27, 2011 and an additional 119 days under 37 CFR 1.703(b)(1) with respect to the Office's failure to issue the patent within three years of the date that national stage commenced under 35 U.S.C. 371(b) or (f) in an international application.

37 CFR 1.702(b)

Insofar as the instant application for patent term adjustment requests reconsideration of the patent term adjustment as it relates to the Office's failure to issue the patent within 3 years of the filing date, the application for patent term adjustment under 37 CFR 1.705(b) is DISMISSED as PREMATURE.

Knowledge of the actual date the patent issues is required to calculate the amount, if any, of additional patent term patentee is entitled to for Office failure to issue the patent within 3 years. See, § 1.702(b). (This is true even where a request for continued examination (RCE) was filed). The computer will not undertake the § 1.702(b) calculation until the actual date of issuance of the patent has been determined. Likewise, the computer will not calculate any further Office delay under § 1.702(a)(4) or applicant delay under § 1.704(c)(10) until the actual date of issuance of the patent has been determined. As such, the Office can not make a determination on the correctness of the patent term adjustment until the patent has issued.

Requesting reconsideration of the patent term adjustment to be indicated on the patent based on the initial determination of patent term adjustment and a projected issuance date of the patent (or even the filing date of the request for continued examination) is premature. Accordingly, it is appropriate to dismiss as premature such a request.

Applicant is advised that they may wait until the time of the issuance of the patent and file a request for reconsideration of the patent term adjustment pursuant to 37 CFR 1.705(d). As the USPTO does not calculate the amount of time earned pursuant to 37 CFR 1.702(b) until the time of the issuance of the patent, the Office will consider any request for reconsideration of the patent term adjustment due to an error in the calculation of 37 CFR 1.702(b) to be timely if the request for reconsideration is filed within two months of the issuance of the patent. However, as to all other bases for contesting the initial determination of patent term adjustment received with the notice of allowance, applicant must timely file an application for patent term adjustment prior to the payment of the issue fee[1].

Any request for reconsideration of the patent term adjustment indicated on the patent must be timely filed within 2 months after issuance pursuant to 37 CFR 1.705(d) and **must** include payment of the required fee under 37 CFR 1.18(e).

37 CFR 1.703(a)(3)

Applicants' assert that the application is entitled to an additional 46 days under 37 CFR 1.703(b)(3) with respect to the mailing of the Notice of Allowance on June 27, 2011. A review of the record reveals that applicants are correct. A request for continued examination was filed January 12, 2011. A reply in response thereto (Notice of Allowance) was mailed June 27, 2011. Thus, in accordance with 37 CFR 1.702(a)(2), the application is entitled to an additional adjustment of 46 days. The adjustment commenced May 13, 2011, the day after the date that is three months after the date that the request for continued examination was filed, and ended June 27, 2011, the date that the Notice of Allowance was mailed. See, 37 CFR 1.703(a)(3).

37 CFR 1.704

In addition to the applicant delay totalling 51 days, as asserted by the applicants, the overall patent term adjustment as of the time of allowance is subject to an additional reduction totalling 163 days with respect to the supplemental reply filed June 24, 2011.

---

[1] For example, if applicant disputes both the calculation of patent term adjustment under 37 CFR 1.702(a)(1) for Office failure to mail a first Office action or notice of allowance not later than fourteen months after the date on which the application was filed and under 37 CFR 1.702(b) for Office failure to issue a patent within three years of the actual filing date of the application, then applicant must still timely file an application for patent term adjustment prior to the payment of the issue fee to contest the calculation of Office delay in issuing a first Office action or notice of allowance. See 37 CFR 1.705(b) and 35 U.S.C. 154(b)(3)(B). A dispute as to the calculation of the §1.702(a)(1) period raised on request for reconsideration of patent term adjustment under 37 CFR 1.705(d) will be dismissed as untimely filed.

In response to the Notice of Allowance mailed October 12, 2010, a request for continued examination was filed January 12, 2011. Thereafter, on June 24, 2011, a supplemental reply (information disclosure statement) was filed. Thus, in accordance with 37 CFR 1.704(c)(8), the application is subject to further reduction of 163 days. The reduction commenced January 13, 2011 the day after the date that the initial reply was filed, and ended June 24, 2011, the date that the supplemental reply (information disclosure statement) was filed.

CONCLUSION

Accordingly, for the reasons set forth herein, as of the time of allowance, the application was entitled to an overall adjustment of one day (215 days per § 1.703(a) (78 days + 45 days + 46 days) - 214 days for applicant delays per § 1.704 (37 days + 14 days + 163 days)).

Receipt is hereby acknowledged of the $200.00 patent term adjustment application fee required per 37 CFR 1.705(b)(1).

The Office of Data Management has been advised of this decision. This application is being referred to the Office of Data Management for issuance of the patent.

Telephone inquiries specific to this decision should be directed to the undersigned at (571) 272-3205.

/ALESIA M. BROWN/

Alesia M. Brown
Petitions Attorney
Office of Petitions

Enclosure: Adjusted PAIR Calculation

Patent Term Adjustments

PTA/PTE Information | Patent Term Adjustment | Patent Term Extension

Application Number*: 11908695 Search | Explanation of PTA Calculation | Explanation of PTE Calculation

PTA Calculations for Application: 11908695

Application Filing Date	09/14/2007	OverLapping Days Between (A and B) or (A and C)	0
Issue Date of Patent		Non-Overlapping USPTO Delays:	169
A Delays	169	PTO Manual Adjustment	-117
B Delays	0	Applicant Delay (APPL)	51
C Delays	0	Total PTA (days)	1

* - Sorted Column

File Contents History

Action Number	Action Recorded Date	Action Due Date	Action Code	Action Description	Duration PTO	Duration APPL	Parent Action Number
128	09/21/2011		P028	Adjustment of PTA Calculation by PTO		163	0
127	09/21/2011		P028	Adjustment of PTA Calculation by PTO	46		0
110	06/27/2011	05/12/2011	MN/=.	Mail Notice of Allowance	46		93
109	06/22/2011		OAR	Office Action Review			0
108	06/22/2011		OAR	Office Action Review			0
107	06/22/2011		IREV	Issue Revision Completed			0
106	06/22/2011		DVER	Document Verification			0
105	06/07/2011		OAR	Office Action Review			0
104	06/07/2011		OAR	Office Action Review			0
103	06/07/2011		ACRE	Allowed Case Returned to the Examiner for Clerical Processing			0
102	06/06/2011		N/=.	Notice of Allowance Data Verification Completed			0
101	06/05/2011		EX.A	Examiner's Amendment Communication			0
100	06/05/2011		CNTA	Allowability Notice			0
97	02/09/2011		FIDC	Finished Initial Data Capture			0
92	01/14/2011		ABN9	Disposal for a RCE / CPA / R129			0
99	01/12/2011		IDSC	Information Disclosure Statement considered			0
98	01/12/2011		IDSC	Information Disclosure Statement considered			0
96	01/12/2011		WIDS	Information Disclosure Statement (IDS) Filed			0
95	01/12/2011		RCAP	Reference capture on IDS			0
94	01/12/2011		M844	Information Disclosure Statement (IDS) Filed			0
93	01/12/2011		RCEX	Request for Continued Examination (RCE)			0
91	01/12/2011		WIDS	Information Disclosure Statement (IDS) Filed			0
90	01/12/2011		BRCE	Workflow - Request for RCE - Begin			0
89	12/09/2010		EML_NTR	Email Notification			0
88	12/09/2010		TCPB	Printer Rush- No mailing			0
87	12/09/2010		MM327	Mail Miscellaneous Communication to Applicant			0
86	12/06/2010		M327	Miscellaneous Communication to Applicant - No Action Count			0
85	11/17/2010		PUBTC	Pubs Case Remand to TC			0
83	10/12/2010		ELC_RVW	Electronic Review			0
82	10/12/2010		EML_NTF	Email Notification			0
81	10/12/2010	08/28/2010	MN/=.	Mail Notice of Allowance	45		62
84	10/11/2010		EIDC	Export to Initial Data Capture			0
80	10/06/2010		DVER	Document Verification			0
79	10/06/2010		IREV	Issue Revision Completed			0
78	10/06/2010		N/=.	Notice of Allowance Data Verification Completed			0
77	10/06/2010		DOCK	Case Docketed to Examiner in GAU			0
76	10/01/2010		CNTA	Allowability Notice			0
75	07/16/2010		IDSC	Information Disclosure Statement considered			0
73	07/16/2010		RCAP	Reference capture on IDS			0
72	07/16/2010		M844	Information Disclosure Statement (IDS) Filed			0
69	07/16/2010		WIDS	Information Disclosure Statement (IDS) Filed			0
71	07/13/2010		N/AP	Notice of Appeal Filed			0
70	07/13/2010		XT/G	Request for Extension of Time - Granted			0
68	06/03/2010		EML_NTR	Email Notification			0
67	06/03/2010		MCTAV	Mail Advisory Action (PTOL - 303)			0
66	05/24/2010		CTAV	Advisory Action (PTOL-303)			0
65	04/30/2010		IRFND	Request for Refund			0
63	04/30/2010		FWDX	Date Forwarded to Examiner			0
74	04/28/2010		IDSC	Information Disclosure Statement considered			0
64	04/28/2010		WIDS	Information Disclosure Statement (IDS) Filed			0
62	04/28/2010	04/14/2010	A.NE	Amendment after Final Rejection		14	56
61	04/28/2010		XT/G	Request for Extension of Time - Granted			0
60	04/28/2010		M844	Information Disclosure Statement (IDS) Filed			0
58	01/19/2010		ELC_RVW	Electronic Review			0
57	01/15/2010		EML_NTF	Email Notification			0
56	01/14/2010		MCTFR	Mail Final Rejection (PTOL - 326)			0
55	01/04/2010		CTFR	Final Rejection			0
51	11/17/2009		FWDX	Date Forwarded to Examiner			0
53	10/02/2009		IDSC	Information Disclosure Statement considered			0
52	10/02/2009	10/02/2009	M844	Information Disclosure Statement (IDS) Filed			50
50	10/02/2009	08/26/2009	A...	Response after Non-Final Action		37	44
49	10/02/2009		XT/G	Request for Extension of Time - Granted			0
48	10/02/2009		WIDS	Information Disclosure Statement (IDS) Filed			0
46	05/26/2009		ELC_RVW	Electronic Review			0
45	05/26/2009		EML_NTF	Email Notification			0
44	05/26/2009		MCTNF	Mail Non-Final Rejection			0
43	05/11/2009		CTNF	Non-Final Rejection			0
27	03/26/2009		FWDX	Date Forwarded to Examiner			0
26	03/18/2009		ELC.	Response to Election / Restriction Filed			0
25	03/18/2009		XT/G	Request for Extension of Time - Granted			0

23	02/02/2009		EML_NTF	Email Notification		0
22	02/02/2009	11/16/2008	MCTRS	Mail Restriction Requirement	78	10
21	01/28/2009		CTRS	Restriction/Election Requirement		0
20	10/21/2008		DOCK	Case Docketed to Examiner in GAU		0
19	10/18/2008		TSSCOMP	IFW TSS Processing by Tech Center Complete		0
12	08/28/2008		PG-ISSUE	PG-Pub Issue Notification		0
11	05/29/2008		OIPE	Application Dispatched from OIPE		0
9	05/21/2008		PGPC	Sent to Classification Contractor		0
8	05/21/2008		M903	Notice of DO/EO Acceptance Mailed		0
7	05/21/2008		FLRCPT.O	Filing Receipt		0
6	05/20/2008		L194	Cleared by OIPE CSR		0
42	12/06/2007		IDSC	Information Disclosure Statement considered		0
18	12/06/2007		M844	Information Disclosure Statement (IDS) Filed		0
17	12/06/2007		A.PE	Preliminary Amendment		0
5	12/06/2007		WIDS	Information Disclosure Statement (IDS) Filed		0
4	09/28/2007		SCAN	IFW Scan & PACR Auto Security Review		0
10	09/16/2007		371COMP	371 Completion Date		0
0.5	03/14/2006		NEFILE	International Filing date		0

Export to: Excel

SPE RESPONSE FOR CERTIFICATE OF CORRECTION

Paper No.:20111215

DATE : December 14, 2012

TO SPE OF : ART UNIT 1652

SUBJECT : Request for Certificate of Correction on Patent No.: 7,897,372

A response is requested with respect to the accompanying request for a certificate of correction.

Please complete this form and return with file, within **7** days to:
Certificates of Correction Branch - ST (South Tower) 9A22
Palm location **7590** - Tel. No. (703) 305-8309

With respect to the change(s) requested, correcting Office and/or Applicant's errors, should the patent read as shown in the certificate of correction? No new matter should be introduced, nor should the scope or meaning of the claims be changed.

Thank You For Your Assistance **Certificates of Correction Branch**

The request for issuing the above-identified correction(s) is hereby:

Note your decision on the appropriated box.

☒ **Approved** All changes apply.

☐ **Approved in Part** Specify below which changes **do not** apply.

☐ **Denied** State the reasons for denial below.

Comments:

/ROBERT MONDESI/
Supervisory Patent Examiner.Art Unit 1652

UNITED STATES PATENT AND TRADEMARK OFFICE

Commissioner for Patents
United States Patent and Trademark Office
P.O. Box 1450
Alexandria, VA 22313-1450
www.uspto.gov

CALFEE HALTER & GRISWOLD, LLP
800 SUPERIOR AVENUE
SUITE 1400
CLEVELAND OH 44114

MAILED
FEB 23 2011
OFFICE OF PETITIONS

In re Application of	:
Caligiuri, et al.	: DECISION ON PETITION
Application No. 11/908,831	:
Filed: July 17, 2007	:
Atty. Dkt. No.: 22727/04541	:

This is a decision on the petition under 37 CFR 1.137(b), filed December 23, 2010.

The petition is **GRANTED**.

This application became abandoned December 23, 2010 for failure to timely reply to the Notice of Allowance and Issue Fee Due (Notice) mailed September 22, 2010. The Notice set a three (3) month statutory period of time for reply. Notice of Abandonment was mailed January 6, 2011.

A grantable petition under 37 CFR 1.137(b) must be accompanied by: (1) the required reply, unless previously filed; (2) the petition fee as set forth in 37 CFR 1.17(m); (3) a statement that the entire delay in filing the required reply from the due date for the reply until the filing of a grantable petition pursuant to 37 CFR 1.137(b) was unintentional; and (4) any terminal disclaimer (and fee as set forth in 37 CFR 1.20(d)) required by 37 CFR 1.137(d). Where there is a question as to whether either the abandonment or the delay in filing a petition under 37 CFR 1.137 was unintentional, the Director may require additional information. See MPEP 711.03(c)(II)(C) and (D).

The instant petition has been carefully reviewed and found in compliance with the requirements set forth above.

In view thereof, this application is being forwarded to the Office of Data Management for further processing.

Telephone inquiries concerning this matter may be directed to the undersigned at (571) 272-3205.

/ALESIA M. BROWN/

Alesia M. Brown
Attorney Advisor
Office of Petitions

UNITED STATES PATENT AND TRADEMARK OFFICE

Commissioner for Patents
United States Patent and Trademark Office
P.O. Box 1450
Alexandria, VA 22313-1450
www.uspto.gov

NOVO NORDISK, INC.
INTELLECTUAL PROPERTY DEPARTMENT
100 COLLEGE ROAD WEST
PRINCETON NJ 08540

MAILED
JAN 12 2012
OFFICE OF PETITIONS

In re Application of :
Lau, et al. :DECISION ON APPLICATION
Application No.: 11/908,834 :FOR ADJUSTMENT
Filed: September 17, 2008 :PATENT TERM ADJUTSMENT
Attorney Docket No. **7140.204-US** :

This is in response to the "APPLICATION FOR PATENT TERM ADJUSTMENT UNDER 37 CFR 1.705(d)" filed December 14, 2011. The petition is properly treated under 37 CFR 1.705(b). Applicants request that the initial Determination of Patent Term Adjustment under 35 U.S.C. 154(b) be corrected from two hundred and twenty-six (226) days to one hundred and ninety-one (191) days.

The request for review of determination of the patent term adjustment is **GRANTED TO THE EXTENT INDICTED HEREIN.**

The Office has updated the PALM and PAIR screens to reflect that the correct Patent Term Adjustment (PTA) determination at the time of the mailing of the Notice of Allowance is one hundred and fifty-eight (158) days. A copy of the updated PALM screen, showing the corrected determination, is enclosed.

On October 3, 2011, a Determination of Patent Term Adjustment under 35 U.S.C. 154(b) was mailed indicating that the patent term adjustment to date was 226 days. On December 14, 2011, applicants submitted the instant petition. Applicants assert the Determination of Patent Term Adjustment under 35 U.S.C. 154(b) mailed October 3, 2011, is incorrect. Specifically, applicants state that:

> [a] Notice of DO/EO Missing Requirements was due on or before July 11, 2008. The USPTO mailed the Notice on April 11, 2008, and the response was filed on September 17,2 008, thereby according an Applicant Delay of 68 days.
>
> In addition, an Office Action following a reply was due on or before January 9, 2011 (the date that is 4 months after the date on which the Response to Election-of-

Species/Restriction was filed). The USPTO mailed an Office Action on November 26, 2010. However, this Office Action was subsequently withdrawn due to Examiner error of inconsistency in the version of the claims used. The USPTO mailed a Supplemental Office Action correcting the claim error on February 11, 2011. In this regard, Applicants filed a response on September 9, 2010, but did not receive an Office Action until February 11, 2011, thereby according a USPTO delay of 33 days.

Excerpt from "APPLICATION FOR PATENT TERM ADJUSTMENT UNDER 37 CFR 1.705(d)" filed December 14, 2011, *pages 1-2.*

The application history has been reviewed and it has been determined that applicant should have been assessed a delay under 37 CFR 1.704(b)[1] for filing a reply in excess of the three month period from the April 11, 2008, mailing date of the "Notification of Missing Requirements under 35 USC 371 in the United States Designated/Elected Office (DO/EO/US)". On April 11, 2008, a "Notification of Missing Requirements under 35 USC 371 in the United States Designated/Elected Office (DO/EO/US)". was mailed. On September 17,2 008, applicants filed a response to the "Notification of Missing Requirements under 35 USC 371 in the United States Designated/Elected Office (DO/EO/US)". Thus, applicants failed to engage in reasonable efforts to conclude processing or examination of this application. Accordingly, the period of adjustment set forth in § 1.703 should have been reduced under 37 CFR 1.704(b) by 37 days, the number of days in

---

[1] 37 CFR 1.704(b) states:

> With respect to the grounds for adjustment set forth in §§ 1.702(a) through (e), and in particular the ground of adjustment set forth in § 1.702(b), an applicant shall be deemed to have failed to engage in reasonable efforts to conclude processing or examination of an application for the cumulative total of any periods of time in excess of three months that are taken to reply to any notice or action by the Office making any rejection, objection, argument, or other request, measuring such three-month period from the date the notice or action was mailed or given to the applicant, in which case the period of adjustment set forth in § 1.703 shall be reduced by the number of days, if any, beginning on the day after the date that is three months after the date of mailing or transmission of the Office communication notifying the applicant of the rejection, objection, argument, or other request and ending on the date the reply was filed. The period, or shortened statutory period, for reply that is set in the Office action or notice has no effect on the three-month period set forth in this paragraph.

the period beginning on the day after the date that is three months after the date of mailing of the "Notification of Missing Requirements under 35 USC 371 in the United States Designated/Elected Office (DO/EO/US)", July 12, 2008, and ending on the date the reply was filed, September 17, 2008. **A period of reduction of 68 days will be entered.**

Petitioner's argument that an additional adjustment to the patent term under 37 CFR 1.702(a)(2) is warranted has been considered, but found unpersuasive.

37 CFR 1.702 provides that:

(a) Failure to take certain actions within specified time frames. Subject to the provisions of 35 U.S.C. 154(b) and this subpart, the term of an original patent shall be adjusted if the issuance of the patent was delayed due to the failure of the Office to:

(2) Respond to a reply under 35 U.S.C. 132 or to an appeal taken under 35 U.S.C. 134 not later than four months after the date on which the reply was filed or the appeal taken;

37 CFR 1.703 provides, in pertinent part, that:

(a) The period of adjustment under § 1.702(a) is the sum of the following periods:

(2) The number of days, if any, in the period beginning on the day after the date that is four months after the date a reply under § 1.111 was filed and ending on the date of mailing of either an action under 35 U.S.C. 132, or a notice of allowance under 35 U.S.C. 151, whichever occurs first[.]

It is undisputed that the Office mailed an action under 35 U.S.C. 132 in the form of a non-final Office action on November 26, 2010, within four months of the reply under 37 CFR 1.111 filed September 9, 2010. The subsequent mailing of another Office action under 35 U.S.C. 132 does not alter the date used in calculation of the period of adjustment. Pursuant to 35 U.S.C. 154(b)(1)(A)(ii), applicants are only entitled to day-to-day restoration of term lost as a result of delay created by the Office, after four months from the filing of the reply under 37 CFR 1.111 or appeal taken. The fact that the Office later withdrew the non-final Office action does not negate the fact that the Office took action within the meaning of 37 CFR 1.702(a)(2) on November 26, 2010. Further, relative to the

determination of patent term adjustment, the examiner does not have the authority to vacate, rescind, or withdraw an Office action. Unless expunged from the record, for purposes of calculating patent term adjustment, the action originally mailed by the examiner on November 26, 2010, was properly used to calculate the adjustment to the patent term, if any, pursuant to 37 CFR 1.702(a)(2) and 37 CFR 1.703(a)(2). See Changes to Implement Patent Term Adjustment under Twenty-Year Patent Term; Final Rule, 65 Fed. Reg. 54366 (September 18, 2000). Accordingly, no period of adjustment to the patent term pursuant to 37 CFR 1.702(a)(2) will be entered.

In view thereof, the determination of the patent term adjustment at the time of the mailing of the notice of allowance is one hundred and fifty-eight (158) days 287 days of Office delay - 129 days of applicant delay.

The Office acknowledges submission of the $200.00 fee set forth in 37 CFR 1.18(e) for consideration of the application for patent term adjustment under 37 CFR 1.705(b).

Applicants are reminded that any delays by the Office pursuant to 37 CFR 1.702(a)(4) and 1.702(b) and any applicant delays under 37 CFR 1.704(c)(10) will be calculated at the time of the issuance of the patent and applicants will be notified of the revised patent term adjustment to be indicated on the patent in the Issue Notification letter that is mailed to applicants approximately three weeks prior to issuance.

Telephone inquiries regarding this specific matter should be directed to the undersigned at (571) 272-3222.

Kenya A. McLaughlin

Kenya A. McLaughlin
Petitions Attorney
Office of Petitions

Enclosure: Copy of REVISED PALM screen

Patent Term Adjustments

PTA/PTE Information | Patent Term Adjustment | Patent Term Extension

Application Number*: 11908834 Search Explanation of PTA Calculation Explanation of PTE Calculation

PTA Calculations for Application: 11908834

Application Filing Date	09/17/2008	OverLapping Days Between (A and B) or (A and C)	0
Issue Date of Patent		Non-Overlapping USPTO Delays:	287
A Delays	287	PTO Manual Adjustment	-68
B Delays	0	Applicant Delay (APPL)	61
C Delays	0	Total PTA (days)	158

* - Sorted Column

File Contents History

Action Number	Action Recorded Date	Action Due Date	Action Code	Action Description	Duration PTO	Duration APPL	Parent Action Number
113	01/10/2012		P028	Adjustment of PTA Calculation by PTO		68	0
85	10/03/2011		MN/=.	Mail Notice of Allowance			0
84	09/28/2011		OAR	Office Action Review			0
83	09/28/2011		OAR	Office Action Review			0
82	09/28/2011		OAR	Office Action Review			0
81	09/28/2011		IREV	Issue Revision Completed			0
80	09/22/2011		OAR	Office Action Review			0
79	09/22/2011		OAR	Office Action Review			0
78	09/22/2011		OAR	Office Action Review			0
77	09/22/2011		ACRE	Allowed Case Returned to the Examiner for Clerical Processing			0
76	09/22/2011		DVER	Document Verification			0
75	09/22/2011		N/=.	Notice of Allowance Data Verification Completed			0
74	09/22/2011		DOCK	Case Docketed to Examiner in GAU			0
72	09/22/2011		EX.A	Examiner's Amendment Communication			0
71	09/22/2011		CNTA	Allowability Notice			0
73	09/21/2011		EXIE	Interview Summary - Examiner Initiated			0
67	07/25/2011		FWDX	Date Forwarded to Examiner			0
70	07/11/2011		IDSC	Information Disclosure Statement considered			0
69	07/11/2011		RCAP	Reference capture on IDS			0
68	07/11/2011	07/11/2011	M844	Information Disclosure Statement (IDS) Filed			66
66	07/11/2011	05/11/2011	A...	Response after Non-Final Action		61	60
65	07/11/2011		XT/G	Request for Extension of Time - Granted			0
64	07/11/2011		WIDS	Information Disclosure Statement (IDS) Filed			0
62	02/11/2011		ELC_RVW	Electronic Review			0
61	02/11/2011		EML_NTF	Email Notification			0
60	02/11/2011		MSRNF	Mail Supplemental Non-Final Action			0
59	02/07/2011		SRNF	Supplemental Non-Final Action			0
58	11/29/2010		ELC_RVW	Electronic Review			0
57	11/26/2010		EML_NTF	Email Notification			0
56	11/26/2010		MCTNF	Mail Non-Final Rejection			0
55	11/22/2010		CTNF	Non-Final Rejection			0
49	09/10/2010		FWDX	Date Forwarded to Examiner			0
48	09/09/2010		ELC.	Response to Election / Restriction Filed			0
47	08/31/2010		ELC_RVW	Electronic Review			0
46	08/31/2010		EML_NTF	Email Notification			0
45	08/31/2010	11/17/2009	MCTRS	Mail Restriction Requirement	287		19
44	08/27/2010		CTRS	Restriction/Election Requirement			0
43	08/09/2010		A.PE	Preliminary Amendment			0
52	05/28/2010		IDSC	Information Disclosure Statement considered			0
42	05/28/2010		M844	Information Disclosure Statement (IDS) Filed			0
41	05/28/2010		WIDS	Information Disclosure Statement (IDS) Filed			0
51	04/29/2010		IDSC	Information Disclosure Statement considered			0
40	04/29/2010		M844	Information Disclosure Statement (IDS) Filed			0
39	04/29/2010		WIDS	Information Disclosure Statement (IDS) Filed			0
37	03/11/2010		EML_NTR	Email Notification			0
36	03/11/2010		MEXIN	Mail Examiner Interview Summary (PTOL - 413)			0
35	03/03/2010		EXIN	Examiner Interview Summary Record (PTOL - 413)			0
33	12/09/2009		DOCK	Case Docketed to Examiner in GAU			0
32	06/19/2009		EML_NTR	Email Notification			0
31	06/18/2009		PG-ISSUE	PG-Pub Issue Notification			0
30	04/16/2009		EML_NTR	Email Notification			0
29	04/16/2009		FLRCPT.C	Filing Receipt - Corrected			0
28	04/01/2009		EML_NTR	Email Notification			0
27	04/01/2009		FLRCPT.C	Filing Receipt - Corrected			0
26	03/26/2009		TSSCOMP	IFW TSS Processing by Tech Center Complete			0

22	12/17/2008	OIPE	Application Dispatched from OIPE	0
21	12/03/2008	EML_NTR	Email Notification	0
20	12/03/2008	EML_NTR	Email Notification	0
17	12/03/2008	M903	Notice of DO/EO Acceptance Mailed	0
16	12/03/2008	FLRCPT.O	Filing Receipt	0
18	12/02/2008	PGPC	Sent to Classification Contractor	0
10	10/23/2008	CRFE	CRF Is Good Technically / Entered into Database	0
19	09/17/2008	371COMP	371 Completion Date	0
15	09/17/2008	ADDFLFEE	Additional Application Filing Fees	0
13	09/17/2008	SEQLIST	A set of symbols and procedures, provided to the PTO on a set of computer listings, that describe in	0
12	09/17/2008	CRFL	CRF Disk Has Been Received by Preexam / Group / PCT	0
11	09/17/2008	OATHDECL	A statement by one or more inventors satisfying the requirement under 35 USC 115, Oath of the Applic	0
0.5	03/20/2006	NEFILE	International Filing date	0

Export to: Excel

UNITED STATES PATENT AND TRADEMARK OFFICE

Commissioner for Patents
United States Patent and Trademark Office
P.O. Box 1450
Alexandria, VA 22313-1450
www.uspto.gov

DAVID A. GUERRA
INTERNATIONAL PATENT GROUP, LLC
Suite 700
1816 Crowchild Trail N.W.
CALGARY AB T2M 3Y7 CA CANADA

MAILED

JAN 31 2011

OFFICE OF PETITIONS

In re Application of	:	
Gordon Birtwistle et al.	:	
Application No. 11/908,869	:	DECISION ON PETITION
Filed: September 17, 2007	:	TO WITHDRAW
Attorney Docket No. **AP171-07**	:	FROM RECORD
	:	

This is a decision on the renewed Request to Withdraw as attorney or agent of record under 37 CFR § 1.36(b), filed January 4, 2011.

The request is **APPROVED**.

A grantable request to withdraw as attorney/agent of record must be signed by every attorney/agent seeking to withdraw or contain a clear indication that one attorney is signing on behalf of another/others. The Office requires the practitioner(s) requesting withdrawal to certify that he, she, or they have: (1) given reasonable notice to the client, prior to the expiration of the response period, that the practitioner(s) intends to withdraw from employment; (2) delivered to the client or a duly authorized representative of the client all papers and property (including funds) to which the client is entitled; and (3) notified the client of any responses that may be due and the time frame within which the client must respond , pursuant to 37 CFR 10.40.

The request was signed by David A. Guerra on behalf of all attorneys of record who are associated with Customer Number 29689.

All attorneys/agents associated with Customer Number 29689 have been withdrawn. Applicant is reminded that there is no attorney of record at this time.

The correspondence address of record has been changed and all future correspondence will be directed to the first named inventor Gordon Birtwisle at the address indicated below.

There is an outstanding Office action mailed November 26, 2010, that requires a reply from the applicant.

Telephone inquiries concerning this decision should be directed to the undersigned at 571-272-4584.

/JoAnne Burke/
JoAnne Burke
Petitions Examiner
Office of Petitions

cc: Gordon Birtwisle
Grange House, 54 Low Road
Thornhill Edge, Desbury WF12 0PU, GB

UNITED STATES PATENT AND TRADEMARK OFFICE

Commissioner for Patents
United States Patent and Trademark Office
P.O. Box 1450
Alexandria, VA 22313-1450
www.uspto.gov

CHOATE, HALL & STEWART LLP
TWO INTERNATIONAL PLACE
BOSTON MA 02110

MAILED
JAN 10 2011
OFFICE OF PETITIONS

In re Application of	:	
Clint Bidlack	:	DECISION ON PETITION
Application No. 11/908,885	:	TO WITHDRAW
Filed: September 2, 2008	:	FROM RECORD
Attorney Docket No. **2006948-0003**	:	

This is a decision on the request to withdraw as attorney of record under 37 CFR § 1.36, filed December 8, 2010.

The request is **NOT APPROVED**.

The request cannot be approved because it lacks a forwarding correspondence address of the first named inventor or a properly intervening assignee.

If the forwarding correspondence address is to the assignee, the Office will only accept correspondence address changes to the most current address information provided for the assignee of the entire interest *that properly became of record under 37 CFR 3.71.* 37 CFR 3.71(c) states:

> *An assignee becomes of record either in a national patent application or a reexamination proceeding by filing a statement in compliance with § 3.73(b) that is signed by a party who is authorized to act on behalf of the assignee.*

The assignee must establish its ownership of the patent to the satisfaction of the Director. In this regard, the statement under 37 CFR 3.73(b) must have either: (i) documentary evidence of a chain of title from the original owner to the assignee (*e.g.*, copy of an executed assignment), and a statement affirming that the documentary evidence of the chain of title from the original owner to the assignee was or concurrently is being submitted for recordation pursuant to § 3.11; or (ii) a statement specifying where documentary evidence of a chain of title from the original owner to the assignee is recorded in the assignment records of the Office (*e.g.*, reel and frame number).

All future communications from the Office will continue to be directed to the above-listed address until otherwise notified by applicant.

Telephone inquires concerning this decision should be directed to the undersigned at (571) 272-2991.

Terri Johnson
Petitions Examiner
Office of Petitions

cc: **FOLEY & LARDNER LLP**
111 Huntington Avenue
26th Floor
Boston, MA 02199-7610

SPE RESPONSE FOR CERTIFICATE OF CORRECTION

DATE : 08/18/11

TO SPE OF : ART UNIT 1626

SUBJECT : Request for Certificate of Correction for Appl. No.: 11908901 Patent No.: 7902196

CofC mailroom date: 08/09/11

Please respond to this request for a certificate of correction within 7 days.

FOR IFW FILES:

Please review the requested changes/corrections as shown in the **COCIN** document(s) in the IFW application image. No new matter should be introduced, nor should the scope or meaning of the claims be changed.

Please complete the response (see below) and forward the completed response to scanning using document code **COCX**.

FOR PAPER FILES:

Please review the requested changes/corrections as shown in the attached certificate of correction. Please complete this form (see below) and forward it with the file to:

Certificates of Correction Branch (CofC)
Randolph Square – 9D10-A
Palm Location 7580
You can fax the Directors/SPE response to 571-273-3421

Note:

Lamonte Newsome

Certificates of Correction Branch

571-272-3421

Thank You For Your Assistance

The request for issuing the above-identified correction(s) is hereby:

Note your decision on the appropriate box.

- ☒ **Approved** — **All** changes apply.
- ☐ **Approved in Part** — Specify below which changes **do not** apply.
- ☐ **Denied** — State the reasons for denial below.

SPE RESPONSE FOR CERTIFICATE OF CORRECTION

Comments: _____

/Joseph K. McKane/ 1626

SPE Art Unit

UNITED STATES PATENT AND TRADEMARK OFFICE

UNITED STATES DEPARTMENT OF COMMERCE
United States Patent and Trademark Office
Address: COMMISSIONER FOR PATENTS
P.O. Box 1450
Alexandria, Virginia 22313-1450
www.uspto.gov

APPLICATION NO.	FILING DATE	FIRST NAMED INVENTOR	ATTORNEY DOCKET NO.	CONFIRMATION NO.
11/908,910	09/17/2007	Eran Yarom	YAROM 1	8987

1444 7590 10/04/2010
BROWDY AND NEIMARK, P.L.L.C.
624 NINTH STREET, NW
SUITE 300
WASHINGTON, DC 20001-5303

EXAMINER
CHOWDHURY, SUMAIYA A

ART UNIT	PAPER NUMBER
2421	

MAIL DATE	DELIVERY MODE
10/04/2010	PAPER

Please find below and/or attached an Office communication concerning this application or proceeding.

The time period for reply, if any, is set in the attached communication.

UNITED STATES PATENT AND TRADEMARK OFFICE

Commissioner for Patents
United States Patent and Trademark Office
P.O. Box 1450
Alexandria, VA 22313-1450
.uspto.gov

MAILED

OCT 04 2010

DIRECTOR OFFICE
TECHNOLOGY CENTER 2400

BROWDY AND NEIMARK, P.L.L.C.
624 NINTH STREET, NW
SUITE 300
WASHINGTON DC 20001-5303

In re Application of: Yarom et al.
Application No. 11/908,910
Filed: September 17, 2007
For: **METHOD FOR A CLUSTERED CENTRALIZED STREAMING SYSTEM**

DECISION ON PETITION
UNDER 37 C.F.R. § 1.181

This is a decision on the petition filed July 21, 2010 under 37 CFR § 1.181 to invoke Supervisory Authority of the Commissioner and require the following: that the Article 19 claims of record to be substituted for the corresponding pages of the international application as filed, that the Official Action dated March 5, 2010 be withdrawn, and a new Official action be issued based on the Article 19 claims.

A review of the file record reveals that the examiner considered the originally filed claims (claims 1-28) and not the Article 19 claims (claims 1-26). Since the Article 19 claims are of record in the application in accordance with MPEP 1893.01(a) (2), the Office Action of March 5, 2010 is incomplete and hereby withdrawn. The application will be forwarded to the examiner for consideration of the Article 19 claims.

Accordingly, the petition is **GRANTED.**

Any inquiry concerning this decision should be directed to Christopher Grant at (571) 272-7294.

/Christopher Grant/
Christopher Grant
Quality Assurance Specialist
Technology Center 2400
Networking, Multiplexing, Cable and Security

UNITED STATES PATENT AND TRADEMARK OFFICE

Commissioner for Patents
United States Patent and Trademark Office
P.O. Box 1450
Alexandria, VA 22313-1450
www.uspto.gov

OBLON, SPIVAK, MCCLELLAND MAIER & NEUSTADT, L.L.P.
1940 DUKE STREET
ALEXANDRIA VA 22314

MAILED

AUG 20 2010

PCT LEGAL ADMININSTRATION

In re Application of:
KEMP, Thomas, et al.
U.S. Application No.: 11/908,944
PCT No.: PCT/EP2006/002398
International Filing Date: 15 March 2006
Priority Date: 18 March 2005
Attorney Docket No.: 313879US8XPCT
For: METHOD FOR CLASSIFYING AUDIO DATA

DECISION ON PETITION UNDER 37 CFR 1.47(a)

This decision is issued in response to applicants' "Petition Under 37 CFR 1.47(a)" filed 25 August 2008. Applicants have paid the required petition fee.

BACKGROUND

On 15 March 2006, applicants filed international application PCT/EP2006/002398. The international application claimed a priority date of 18 March 2005, and it designated the United States. On 21 September 2006, the International Bureau (IB) communicated a copy of the international application to the United States Patent and Trademark Office (USPTO). The deadline for submission of the basic national fee was thirty months from the priority date, i.e., 18 September 2007.

On 17 March 2009, applicants filed a Transmittal Letter for entry into the national stage in the United States accompanied by, among other materials, payment of the basic national fee.

On 23 April 2008, the United States Designated/Elected Office (DO/EO/US) mailed a Notification Of Missing Requirement (Form PCT/DO/EO/905) stating that an oath or declaration in compliance with 37 CFR 1.497 was required.

On 25 August 2008, applicants filed a response to the Notification Of Missing Requirements (with required extension fee). The Response included declarations executed by two of the three inventors of record and the petition under 37 CFR 1.47(a) considered herein. The petition seeks acceptance of the application without the signature of non-signing inventor Marta Tolos RIGUEIRO, whom applicants assert has refused to execute the application.

On 02 December 2008, the DO/EO/US mailed a "Notification Of Acceptance" (Form PCT/DO/EO/903) and filing receipt identifying the 35 U.S.C. 371(c) date as 25 August 2008.

DISCUSSION

A grantable petition under 37 CFR 1.47(a) must be accompanied by: (1) the fee under 37 CFR 1.17; (2) a statement of the last known address of the non-signing inventor; (3) an oath or declaration executed by the other inventors on behalf of themselves and the non-signing inventor; and (4) factual proof that the inventor refuses to execute the application or cannot be reached after diligent effort.

Applicants here have provided the required petition fee, and the petition states the last known address of the non-signing inventor. Items (1) and (2) are therefore satisfied.

Regarding item (3), section 409.03(a) of the Manual of Patent Examining Practice (MPEP) states that:

> An oath or declaration signed by all the available joint inventors with the signature block of the nonsigning inventor(s) left blank may be treated as having been signed by all the joint inventors on behalf of the nonsigning inventor(s), unless otherwise indicated.

Here, applicants have filed declarations executed by two of the three inventors of record, and the declarations include an unsigned signature block for the non-signing inventor, Marta Tolos RIGUEIRO. These declarations may be accepted as having been executed by the signing inventors on their own behalf and on behalf of the non-signing inventor. Accordingly, item (3) of a grantable petition is satisfied.

Regarding item (4), MPEP section 409.03(d) states that, before it can be concluded that an inventor has refused to execute the application papers, "[a] copy of the application papers should be sent to the last known address of the nonsigning inventor, or, if the nonsigning inventor is represented by counsel, to the address of the nonsigning inventor's attorney." The MPEP also states the following:

> Where a refusal of the inventor to sign the application papers is alleged, the circumstances of the presentation of the application papers and of the refusal must be specified in a statement of facts by the person who presented the inventor with the application papers and/or to whom the refusal was made. Statements by a party not present when an oral refusal is made will not be accepted.

Here, applicants have provided a firsthand statement, with supporting documents, providing an acceptable showing that a request for signature, accompanied by a copy of the complete application, was delivered to the last known address of the non-signing inventor and that the non-signing inventor failed to provide the requested signature in response to applicants' request. These materials provide an acceptable showing that the non-signing inventor has refused to execute the application. Item (4) is therefore satisfied.

CONCLUSION

Applicants' petition under 37 CFR 1.47(a) is **GRANTED**.

The application is accepted without the signature of non-signing inventor Marta Tolos RIGUEIRO.

A notice of the acceptance of the application will be published in the Official Gazette, and a letter informing the non-signing inventor of the application will be forwarded to the inventor's last-known address, as set forth in the petition.

The date under 35 U.S.C. 371(c)(1), (c)(2), and (c)(4) remains 25 August 2008, as set forth in the Notification of Acceptance (Form PCT/DO/EO/903) and filing receipt mailed 02 December 2008.

The application is being referred to GAU 2614 for examination.

Richard M. Ross
Attorney Advisor
Office of PCT Legal Administration
Telephone: (571) 272-3296
Facsimile: (571) 273-0459

UNITED STATES PATENT AND TRADEMARK OFFICE

Commissioner for Patents
United States Patent and Trademark Office
P.O. Box 1450
Alexandria, VA 22313-1450
www.uspto.gov

Marta TOLOS RIGUEIRO
C/Congres 10
08340 Vilassar de Mar
SPAIN

MAILED
AUG 20 2010
PCT LEGAL ADMININSTRATION

In re Application of: KEMP, Thomas, et al.
U.S. Application No.: 11/908,944
PCT No.: PCT/EP2006/002398
International Filing Date: 15 March 2006
Priority Date: 18 March 2005
Attorney Docket No.: 313879US8XPCT
For: METHOD FOR CLASSIFYING AUDIO DATA

Dear Ms. TOLOS RIGUEIRO:

You are identified as the inventor in the above identified United States patent application, filed under the provisions of 37 CFR 1.47(a) and 35 U.S.C. 116. Should a patent be granted, you will be designated as the inventor.

As the named inventor, you are entitled to inspect any paper in the file wrapper of the application, order copies of all or any part thereof (at a prepaid cost per 37 CFR 1.19) or to make your position of record in the application. Alternatively, you may arrange to do any of the preceding through a registered patent agent or attorney presenting written authorization from you. If you care to join the application, counsel of record (see below) would presumably assist you. Joining in the application would entail the filing of an appropriate oath or declaration by you pursuant to 37 CFR 1.63.

Richard M. Ross
Attorney Advisor
Office of PCT Legal Administration
Telephone: (571) 272-3296
Facsimile: (571) 273-0459

Counsel Of Record:
OBLON, SPIVAK, MCCLELLAND MAIER & NEUSTADT, L.L.P.
1940 DUKE STREET
ALEXANDRIA VA 22314
USA

UNITED STATES PATENT AND TRADEMARK OFFICE

UNITED STATES DEPARTMENT OF COMMERCE
United States Patent and Trademark Office
Address: COMMISSIONER FOR PATENTS
P.O. Box 1450
Alexandria, Virginia 22313-1450
www.uspto.gov

APPLICATION NO.	FILING DATE	FIRST NAMED INVENTOR	ATTORNEY DOCKET NO.	CONFIRMATION NO.
11/908,960	09/17/2007	Dahlkyun Oh	30041U	9461

7590 04/19/2011
THE NATH LAW GROUP
112 South West Street
Alexandria, VA 22314

EXAMINER
KELLY, ROBERT M

ART UNIT	PAPER NUMBER
1633	

MAIL DATE	DELIVERY MODE
04/19/2011	PAPER

ACKNOWLEDGEMENT OF REQUEST

Notice of Allowance/Allowability Mailed

The request to print a color drawing reference as the first paragraph in the portion of the specification containing a brief description of the drawings as required by 37 CFR 1.84 and MPEP § 608.02 has been received by the United States Patent and Trademark Office and will be entered into the specification.

571-272-4200 or 1-888-786-0101
Application Assistance Unit
Office of Data Management

FORM PTOM327-5 (Rev. 02/08)

UNITED STATES PATENT AND TRADEMARK OFFICE

Commissioner for Patents
United States Patent and Trademark Office
P.O. Box 1450
Alexandria, VA 22313-1450
www.uspto.gov

April 18, 2011

THE NATH LAW GROUP
112 South West Street
Alexandria VA 22314

In re Application of	:	
Oh, Dahlkyun et al	:	**DECISION ON PETITION**
Application No. 11/908,960	:	
Filed: 09/17/2007	:	***ACCEPTANCE OF COLOR***
Attorney Docket No. 30041U	:	***DRAWINGS***

This is a decision on the Petition to Accept Color Drawings under 37 C.F.R 1.84 (a) (2), received in the United States Patent and Trademark Office (USPTO) September 21, 2010.

The petition is **GRANTED**.

A grantable petition under 37 C.F.R. 1.84(a) (2) must be accompanied by the following.

1. The fee set forth under 37 C.F.R. 1.17(h),
2. Three (3) sets of the color drawings in question, or (1) set if filed via EFS, and
3. The specification contains appropriate language referring to the color drawings as the first paragraph in that portion of the specification relating to the brief description of the drawings.

The petition was accompanied by all of the required fees and drawings. The specification contains the appropriate language. Therefore, the petition is GRANTED.

Telephone inquires relating to this decision may be directed to the undersigned in the Office of Data Management at 571-272-4200.

/Diane Terry/
Quality Control Specialist
Office of Data Management
Publications Branch

UNITED STATES PATENT AND TRADEMARK OFFICE

Commissioner for Patents
United States Patent and Trademark Office
P.O. Box 1450
Alexandria, VA 22313-1450
www.uspto.gov

CARRIER CORPORATION
ONE CARRIER PLACE
INTELLECTUAL PROPERTY DEPARTMENT
FARMINGTON CT 06034

MAILED

MAR 08 2011

OFFICE OF PETITIONS

In re Application of :
Holden et al. :
Application No. 11/908,977 :
Filed: September 18, 2007 :
Attorney Docket No. 60246-465PUS1;PA-057.1090 :
For: CAPACITY CONTROL FOR REFRIGERANT SYSTEM WITH MULTIPLE COMPRESSORS

ON PETITION

This is a decision on the petition, filed February 1, 2011, under 37 CFR 1.137(b) to revive the above-identified application.

The petition is **GRANTED**.

The above-identified application became abandoned for failure to timely submit a reply within three (3) months of the mailing of the May 6, 2010 non-final Office action. No response being received and no extensions of time being obtained under the provisions of 37 CFR 1.136(a), this application became abandoned on August 7, 2010. A Notice of Abandonment was mailed on November 23, 2010.

Applicants have submitted an amendment in reply to the May 6, 2010 non-final Office action, an acceptable statement of the unintentional nature of the delay in responding to the May 6, 2010 non-final Office action, and the $1620.00 petition fee.

All of the requirements under 37 CFR 1.137(b) being met, the petition is granted.

The person signing the petition filed a Change of Correspondence Address on February 1, 2011. There is, however, no indication that the person signing the petition was ever given a power of attorney to prosecute the application. If the person signing the petition desires to receive future correspondence regarding this application, the appropriate power of attorney documents must be submitted. While a courtesy copy of this decision is being mailed to the person signing the petition, all future correspondence will be directed to the address currently of record until appropriate instructions are received.

After the mailing of this decision, the application will be returned to Technology Center AU 3744 for consideration of the amendment filed on February 1, 2011.

Telephone inquiries should be directed to the undersigned at (571) 272-3230.

Shirene Willis Brantley
Senior Petitions Attorney
Office of Petitions

CC: TIMOTHY J. MURPHY
CARLSON, GASKEY & OLDS, P.C.
400 W. MAPLE ROAD, SUITE 350
BIRMINGHAM, MI 48009

UNITED STATES PATENT AND TRADEMARK OFFICE

Commissioner for Patents
United States Patent and Trademark Office
P.O. Box 1450
Alexandria, VA 22313-1450
www.uspto.gov

GROSSMAN, TUCKER, PERREAULT & PFLEGER, PLLC
55 SOUTH COMMERICAL STREET
MANCHESTER NH 03101

MAILED
APR 20 2011
OFFICE OF PETITIONS

In re Application of	:	
BANKHOLT, et al	:	
Application No. 11/908,988	:	ON PETITION
Filed: June 2, 2008	:	
Attorney Docket No. PPT005	:	

This is a decision on the petition under the unintentional provisions of 37 CFR 1.137(b), filed February 17, 2011, to revive the above-identified application.

The petition is **GRANTED**.

The application became abandoned for failure to timely file a reply within the meaning of 37 CFR 1.113 to the final Office action of February 22, 2010. The proposed reply required for consideration of a petition to revive must be a Notice of Appeal (and appeal fee required by 37 CFR 41.20(b)(2), an amendment that *prima facie* places the application in condition for allowance, a Request for Continued Examination and submission (37 CFR 1.114), or the filing of a continuing application under 37 CFR 1.53(b). See MPEP 711.03(c)(II)(A)(2). A three (3) month extension of time pursuant to the provisions of 37 CFR 1.136(a) were obtained. Accordingly, the date of abandonment of this application is August 23, 2010.

The petition satisfies the requirements of 37 CFR 1.137(b) in that petitioner has supplied (1) the reply in the form of a Request for Continued Examination (RCE) and fee of $810, and the submission required by 37 CFR 1.114; (2) the petition fee of $1620; and (3) the required statement of unintentional delay have been received.

An extension of time under 37 CFR 1.136 must be filed prior to the expiration of the maximum extendable period for reply. *See* In re Application of S., 8 USPQ2d 1630, 1631 (Comm'r Pats. 1988). Since the $1110 extension of time fee submitted with the petition on February 17, 2011, was subsequent to the maximum extendable period for reply, this fee is unnecessary and will be credited to petitioner's Deposit Account No.50-2121.

Telephone inquiries concerning this decision should be directed to the undersigned at (571) 272-6735.

This application is being referred to Technology Center 1764 for further processing in the normal course of business.

/Diane C. Goodwyn/
Diane C. Goodwyn
Petitions Examiner
Office of Petitions

UNITED STATES PATENT AND TRADEMARK OFFICE

Commissioner for Patents
United States Patent and Trademark Office
P.O. Box 1450
Alexandria, VA 22313-1450
www.uspto.gov

SYNGENTA CROP PROTECTION , INC.
PATENT AND TRADEMARK DEPARTMENT
410 SWING ROAD
GREENSBORO NC 27409

MAILED

OCT 27 2011

OFFICE OF PETITIONS

In re Application of	:	
Shirley et al.	:	
Application No. 11/908,994	:	DECISION ON PETITION
Filed: April 28, 2008	:	
Attorney Docket No. 70626	:	

This is a decision on the petition under the unintentional provisions of 37 CFR 1.137(b), filed October 11, 2011, to revive the above-identified application.

The petition is **GRANTED**.

This application became abandoned as a result of petitioner's failure to file an appeal brief(and fee required by 37 CFR 41.20(b)(2))within the time period provided in 37 CFR 41.37(a)(1). No extensions of time under the provisions of 37 CFR 1.136(b) were obtained. As an appeal brief (and appeal brief fee) was not filed within two (2) months of the Notice of Appeal filed April 4, 2011, the appeal was dismissed and the proceedings as to the rejected claims were terminated. See 37 CFR 1.197(b). As no claim was allowed, the application became abandoned on June 7, 2011. See MPEP 1215.04.

The petition satisfies the requirements of 37 CFR 1.137(b) in that petitioner has supplied (1) the reply in the form of a Request for Continued Examination (RCE) and fee of $930.00, and the submission required by 37 CFR 1.114 (previously filed April 4, 2011); (2) the petition fee of $1,860.00; and (3) a proper statement of unintentional delay.

Telephone inquiries concerning this decision should be directed to the undersigned at (571) 272-7751.

This matter is being referred to Technology Center AU 1613 for processing of the Request for Continued Examination under 37 CFR 1.114 and the Amendment filed April 4, 2011.

/Joan Olszewski/
Joan Olszewski
Petitions Examiner
Office of Petitions

Doc Code: PET.AUTO Document Description: Petition automatically granted by EFS-Web	PTO/SB/64 U.S. Patent and Trademark Office Department of Commerce

Electronic Petition Request	**PETITION FOR REVIVAL OF AN APPLICATION FOR PATENT ABANDONED UNINTENTIONALLY UNDER 37 CFR 1.137(b)**
Application Number	11909070
Filing Date	21-Mar-2008
First Named Inventor	Wilhelmus Maas
Attorney Docket Number	062204-00663
Title	Dosing Head for Dispensing a Fluid From a Container

The above-identified application became abandoned for failure to file a timely and proper reply to a notice or action by the United States Patent and Trademark Office. The date of abandonment is the day after the expiration date of the period set for reply in the office notice or action plus any extensions of time actually obtained.

APPLICANT HEREBY PETITIONS FOR REVIVAL OF THIS APPLICATION

NOTE: A grantable petition requires the following items:
(1) Petition fee;
(2) Reply and/or issue fee;
(3) Terminal disclaimer with disclaimer fee - required for all utility and plant applications filed before June 8, 1995; and for all design applications; and
(4) Statement that the entire delay was unintentional

Petition Fee

- ○ Applicant claims SMALL ENTITY status. See 37 CFR 1.27.
- ○ Applicant is no longer claiming SMALL ENTITY status. See 37 CFR 1.27(g)(2).
- ○ Applicant(s) status remains as SMALL ENTITY.
- ◉ Applicant(s) status remains as other than SMALL ENTITY.

2. Reply and/or fee

- ○ I certify, in accordance with 37 CFR 1.4(d)(4) that the amendment and response have already been filed in the above-identified application on
- ○ Amendment and response are attached

RCE request,submission, and fee.

- ○ I certify, in accordance with 37 CFR 1.4(d)(4) that the RCE Request, Submission, and Fee have already been filed in the above-identified application on
- ◉ RCE Request, Submission, and Fee are attached

Notice of Appeal

○ I certify, in accordance with 37 CFR 1.4(d)(4) that the Notice of Appeal and Fee have already been filed in the above-identified application on

○ Notice of Appeal and Fee are attached

3. Terminal Disclaimer is not required, since the Electronic Petition format is not support for Design applications and applications filed before June 8, 1995. Please file using regular petition format for review by the Office of Petitions.

☒ STATEMENT: The entire delay in filing the required reply from the due date for the required reply until the filing of a grantable petition under 37 CFR 1.137(b) was unintentional.

THIS PORTION MUST BE COMPLETED BY THE SIGNATORY OR SIGNATORIES

I certify, in accordance with 37 CFR 1.4(d)(4) that I am:

◉ An attorney or agent registered to practice before the Patent and Trademark Office who has been given power of attorney in this application.

○ An attorney or agent registered to practice before the Patent and Trademark Office, acting in a representative capacity.

○ A sole inventor

○ A joint inventor; I certify that I am authorized to sign this submission on behalf of all of the inventors

○ A joint inventor; all of whom are signing this e-petition

○ The assignee of record of the entire interest that has properly made itself of record pursuant to 37 CFR 3.71

Signature	/Aaron Haleva/
Name	Aaron Haleva
Registration Number	44733

UNITED STATES PATENT AND TRADEMARK OFFICE

Commissioner for Patents
United States Patent and Trademark Office
P.O. Box 1450
Alexandria, VA 22313-1450
www.uspto.gov

Decision Date February 15, 2012

In re Application of Wilhelmus Maas

Application No. 11909070

Filed: 21-Mar-2008

Attorney Docket No. 062204-00663

DECISION ON PETITION

UNDER CFR 1.137(b)

This is an electronic decision on the petition under 37 CFR 1.137(b), February 15, 2012 , to revive the above-identified application.

The petition is GRANTED.

The above-identified application became abandoned for failure to reply in a timely manner to the outstanding final Office action. The date of abandonment is the day after the last day of the period set for reply in the Office action plus any applicable extensions of time properly requested.

The electronic petition satisfies the conditions for revival pursuant to the provisions of 37 CFR 1.137(b) in that (1) the reply in the form of an amendment and/or response, Request for Continued Examination, and the filing fee required under 37 CFR 1.17(e); (2) the petition fee as set forth in 37 CFR 1.17 (m); and (3) the required statement of unintentional delay have been received. Accordingly, the Request for Continued Examination and the amendment and/or response are accepted as having been unintentionally delayed.

Telephone inquiries concerning this decision should be directed to the Patent Electronic Business Center (EBC) at 866-217-9197.

This application file is being directed to the Technology Center.

Office of Petitions

UNITED STATES PATENT AND TRADEMARK OFFICE

Commissioner for Patents
United States Patent and Trademark Office
P.O. Box 1450
Alexandria, VA 22313-1450
www.uspto.gov

HUSCH BLACKWELL LLP
HUSCH BLACKWELL SANDERS LLP WELSH & KATZ
120 S. RIVERSIDE PLAZA
22ND FLOOR
CHICAGO IL 60606

MAILED
JUL 28 2011
OFFICE OF PETITIONS

In re Application of	:	
Satoshi Seo et al	:	
Application No. 11/909,130	:	DECISION GRANTING PETITION
Filed: September 19, 2007	:	UNDER 37 CFR 1.313(c)(2)
Attorney Docket No. 0553-0613	:	

This is a decision on the petition under 37 CFR 1.313(c)(2), filed July 26, 2011, to withdraw the above-identified application from issue after payment of the issue fee.

The petition is **GRANTED**.

The above-identified application is withdrawn from issue for consideration of a submission under 37 CFR 1.114 (request for continued examination). *See* 37 CFR 1.313(c)(2).

Petitioner is advised that the issue fee paid on June 13, 2011 cannot be refunded. If, however, this application is again allowed, petitioner may request that it be applied towards the issue fee required by the new Notice of Allowance.[1]

Telephone inquiries should be directed to the undersigned at (571) 272-3208.

This application is being referred to Technology Center AU 1786 for processing of the request for continued examination under 37 CFR 1.114 and for consideration of the concurrently filed IDS.

/Karen Creasy/
Karen Creasy
Petitions Examiner
Office of Petitions

[1] *The request to apply the issue fee to the new Notice may be satisfied by completing and returning the new Part B – Fee(s) Transmittal Form (along with any balance due at the time of submission). Petitioner is advised that the Issue Fee Transmittal Form* ***must*** *be completed and timely submitted to avoid abandonment of the application.*

UNITED STATES PATENT AND TRADEMARK OFFICE

Commissioner for Patents
United States Patent and Trademark Office
P.O. Box 1450
Alexandria, VA 22313-1450
www.uspto.gov

MAILED

OCT 12 2010

OFFICE OF PETITIONS

FENNEMORE CRAIG
3003 NORTH CENTRAL AVENUE
SUITE 2600
PHOENIX AZ 85012

In re Application of	:	
Arieh Levy, et al.	:	
Application No. 11/909,153	:	NOTICE
Filed: September 19, 2007	:	
Attorney Docket No. 27275.004	:	

This is a notice regarding your request for acceptance of a fee deficiency submission under 37 CFR 1.28.

The Office no longer investigates or rejects original or reissue applications under 37 CFR 1.56. **1098 Off. Gaz. Pat. Office 502 (January 3, 1989)**. Therefore, nothing in this Notice is intended to imply that an investigation was done.

Your fee deficiency submission under 37 CFR 1.28 is hereby **ACCEPTED**.

This application is no longer entitled to small entity status. Accordingly, all future fees paid in this application must be paid at the large entity rate.

Inquiries related to this communication should be directed to the undersigned at (571) 272-2991.

/Terri Johnson/
Terri Johnson
Petitions Examiner
Office of Petitions

UNITED STATES PATENT AND TRADEMARK OFFICE

Commissioner for Patents
United States Patent and Trademark Office
P.O. Box 1450
Alexandria, VA 22313-1450
www.uspto.gov

FENNEMORE CRAIG
3003 NORTH CENTRAL AVENUE
SUITE 2600
PHOENIX AZ 85012

MAILED

FEB 17 2011

OFFICE OF PETITIONS

In re Application of
Arieh Levy et al
Application No. 11/909,153
Filed: September 19, 2007
Attorney Docket No. 27275.004

DECISION ON REQUEST FOR REFUND

This is a decision on the Request For Refund filed February 2, 2011.

The request is **GRANTED**.

Applicant request a refund of the fee deficiency charged on the accounting date of October 12, 2010, because the fee deficiency of $1,380.00 had already been paid on September 28, 2010. Therefore, a total of $1,380.00 is being credited to account no. 06-0590 as authorized.

Any questions concerning this matter may be directed to the undersigned at (571) 272-3208.

/KOC/
Karen Creasy
Petitions Examiner
Office of Petitions

SPE RESPONSE FOR CERTIFICATE OF CORRECTION

Paper No.: _____

DATE : 4/28/11

TO SPE OF : ART UNIT 3746

SUBJECT : Request for Certificate of Correction for Appl. No.: 11909182 Patent No.: 7918657

CofC mailroom date: 04/11/11

Please respond to this request for a certificate of correction within 7 days.

FOR IFW FILES:

Please review the requested changes/corrections as shown in the **COCIN** document(s) in the IFW application image. No new matter should be introduced, nor should the scope or meaning of the claims be changed.

Please complete the response (see below) and forward the completed response to scanning using document code **COCX**.

FOR PAPER FILES:

Please review the requested changes/corrections as shown in the attached certificate of correction. Please complete this form (see below) and forward it with the file to:

Certificates of Correction Branch (CofC)
Randolph Square – 9D10-A
Palm Location 7580

You can fax the Directors/SPE response to 571-270-9990

Lamonte Newsome

Certificates of Correction Branch

571-272-3421

Thank You For Your Assistance

The request for issuing the above-identified correction(s) is hereby:
Note your decision on the appropriate box.

- [x] **Approved** — **All** changes apply.
- [ ] **Approved in Part** — Specify below which changes **do not** apply.
- [ ] **Denied** — State the reasons for denial below.

Comments: _____

SPE RESPONSE FOR CERTIFICATE OF CORRECTION

5/2/11

SPE

Art Unit 3746

UNITED STATES PATENT AND TRADEMARK OFFICE

Commissioner for Patents
United States Patent and Trademark Office
P.O. Box 1450
Alexandria, VA 22313-1450
www.uspto.gov

ALSTON & BIRD LLP
BANK OF AMERICA PLAZA
101 SOUTH TRYON STREET, SUITE 4000
CHARLOTTE, NC 28280-4000

MAILED

DEC 22 2010

OFFICE OF PETITIONS

In re Application of	:	
Sing-Il Jin	:	
Application No. 11/909,227	:	DECISION ON PETITION
Filed: September 20, 2007	:	TO WITHDRAW
Attorney Docket No. 038779/332542	:	FROM RECORD
	:	

This is a decision on the Request to Withdraw as attorney or agent of record under 37 C.F.R. § 1.36(b), filed October 15, 2010.

The request is **APPROVED**.

A grantable request to withdraw as attorney/agent of record must be signed by every attorney/agent seeking to withdraw or contain a clear indication that one attorney is signing on behalf of another/others.

The request was signed by Nathaniel T. Quirk on behalf of all attorneys of record who are associated with customer No. 00826. All attorneys/agents associated with the Customer Number 00826 have been withdrawn. Applicant is reminded that there is no attorney of record at this time.

The correspondence address of record has been changed and the new correspondence address is the address indicated below.

There is an outstanding Office action mailed December 8, 2010 that requires a reply from the applicant.

Telephone inquiries concerning this decision should be directed to undersigned at 571-272-1642.

All other inquiries concerning the examination or status of this application should be directed to the Technology Center.

/AMW/
April M. Wise
Petitions Examiner
Office of Petitions

cc: KT CORPORATION
206 JUNGIA-DONG, BUNDANG-GU,
KEYONGGI-DO
SEONGNAM-CITY 463-711
KOREA

UNITED STATES PATENT AND TRADEMARK OFFICE

UNITED STATES DEPARTMENT OF COMMERCE
United States Patent and Trademark Office
Address: COMMISSIONER FOR PATENTS
P.O. Box 1450
Alexandria, Virginia 22313-1450
www.uspto.gov

APPLICATION NUMBER	FILING OR 371(C) DATE	FIRST NAMED APPLICANT	ATTY. DOCKET NO./TITLE
11/909,227	09/20/2007	Sing-Il Jin	038779/332542

CONFIRMATION NO. 2893

POWER OF ATTORNEY NOTICE

826
ALSTON & BIRD LLP
BANK OF AMERICA PLAZA
101 SOUTH TRYON STREET, SUITE 4000
CHARLOTTE, NC 28280-4000

OC000000044876014

Date Mailed: 12/10/2010

NOTICE REGARDING CHANGE OF POWER OF ATTORNEY

This is in response to the Power of Attorney filed 10/14/2010.

- The withdrawal as attorney in this application has been accepted. Future correspondence will be mailed to the new address of record. 37 CFR 1.33.

/amwise/

Office of Data Management, Application Assistance Unit (571) 272-4000, or (571) 272-4200, or 1-888-786-0101

UNITED STATES PATENT AND TRADEMARK OFFICE

UNITED STATES DEPARTMENT OF COMMERCE
United States Patent and Trademark Office
Address: COMMISSIONER FOR PATENTS
P.O. Box 1450
Alexandria, Virginia 22313-1450
www.uspto.gov

APPLICATION NO.	FILING DATE	FIRST NAMED INVENTOR	ATTORNEY DOCKET NO.	CONFIRMATION NO.
11/909,267	12/23/2008	Takushi Yoshida	15942-000004/NP	3630

27572 7590 12/23/2010
HARNESS, DICKEY & PIERCE, P.L.C.
P.O. BOX 828
BLOOMFIELD HILLS, MI 48303

EXAMINER
KRISHNAN, GANAPATHY

ART UNIT	PAPER NUMBER
1623	

MAIL DATE	DELIVERY MODE
12/23/2010	PAPER

Please find below and/or attached an Office communication concerning this application or proceeding.

The time period for reply, if any, is set in the attached communication.

UNITED STATES PATENT AND TRADEMARK OFFICE

Commissioner for Patents
United States Patent and Trademark Office
P.O. Box 1450
Alexandria, VA 22313-1450
www.uspto.gov

HARNESS, DICKEY & PIERCE, P.L.C.
P.O. BOX 828
BLOOMFIELD HILLS MI 48303

DEC 2 3 2010

In re Application of YOSHIDA, TAKUSHI Application No. 11/909,267 Filed: December 23, 2008 Attorney Docket No. 15942-000004/NP	:	DECISION ON REQUEST TO PARTICIPATE IN PATENT PROSECUTION HIGHWAY PROGRAM AND PETITION TO MAKE SPECIAL UNDER 37 CFR 1.102(d)

This is a decision on the request to participate in the Patent Prosecution Highway (PPH) program and the petition under 37 CFR 1.102(d), filed October 19, 2010, to make the above-identified application special.

The request and petition are **GRANTED**.

A grantable request to participate in the PPH program and petition to make special require:

(1) The U.S. application must validly claim priority under 35 U.S.C. 119(a) to one or more applications filed in the JPO;
(2) Applicant must submit a copy of the allowable/patentable claim(s) from the JPO application(s) along with an English translation thereof and a statement that the English translation is accurate;
(3) All the claims in the U.S. application must sufficiently correspond or be amended to sufficiently correspond to the allowable/patentable claim(s) in the JPO application(s);
(4) Examination of the U.S. application has not begun;
(5) Applicant must submit a copy of all the office actions from each of the JPO application(s) containing the allowable/patentable claim(s) along with an English translation thereof and a statement that the English translation is accurate; and
(6) Applicant must submit an IDS listing the documents cited by the JPO examiner in the JPO office action along with copies of documents except U.S. patents or U.S. patent application publications.

The request to participate in the PPH program and petition comply with the above requirements. Accordingly, the above-identified application has been accorded "special" status.

Telephone inquiries concerning this decision should be directed to Ram R. Shukla at 571-272-0735.

All other inquiries concerning the examination or status of the application should be directed to Patent Application Information Retrieval (PAIR) system at the http://www.uspto.gov/ebc/index.html.

The application is being forwarded to the examiner for action on the merits commensurate with this decision.

Ram R. Shukla, Ph.D.
Supervisory Patent Examiner
TC 1600

RAM R. SHUKLA, PH.D.
SUPERVISORY PATENT EXAMINER

UNITED STATES PATENT AND TRADEMARK OFFICE

Commissioner for Patents
United States Patent and Trademark Office
P.O. Box 1450
Alexandria, VA 22313-1450
www.uspto.gov

BROOKE SCHUMM III
Daneker, McIntire, Schumm, Prince, Goldstein et al
ONE NORTH CHARLES STREET
SUITE 2450
BALTIMORE MD 21201

MAILED
SEP 20 2011
OFFICE OF PETITIONS

In re Application of	:	
Schumm et al.	:	
Application No. 11/909358	:	ON PETITION
Filing or 371(c) Date: 09/21/2007	:	
Attorney Docket Number:	:	
SCH-07-006	:	

This is a decision on the Petition for Revival of an Application for Patent Abandoned Unintentionally Under 37 C.F.R. § 1.137(b), August 26, 2011.

This Petition is hereby **granted**.

The above-identified application became abandoned for failure to timely reply to the Restriction/Election Requirement, mailed January 21, 2011. Restriction/Election Requirement set a one (1) month or 30-day period for reply. Extensions of time under 37 CFR 1.136(a) were available. No complete and proper reply having been received, the application became abandoned on February 22, 2011.

The petition satisfies the conditions for revival pursuant to the provisions of 37 CFR 1.137(b) in that (1) the reply in the form of a response to the Restriction/Election Requirement; (2) the petition fee; and (3) the required statement of unintentional delay are filed with the present petition. Accordingly, the reply is accepted as having been unintentionally delayed.

This application is being forwarded to Technology Center Art Unit 1729 for processing of the response in due course.

Telephone inquiries concerning this decision should be directed to the undersigned at (571) 272-3232.

/DLW/

Derek L. Woods
Attorney
Office of Petitions

UNITED STATES PATENT AND TRADEMARK OFFICE

Commissioner for Patents
United States Patent and Trademark Office
P.O. Box 1450
Alexandria, VA 22313-1450
www.uspto.gov

IPHORGAN, LTD.
1130 LAKE COOK ROAD
SUITE 240
BUFFALO GROVE IL 60089

MAILED
APR 28 2011
OFFICE OF PETITIONS

In re Patent No. 7,849,775 :
Issue Date: December 14, 2010 :
Application No. 11/909,362 : DECISION ON PETITION
Filed: September 21, 2007 :
Attorney Docket No. HDH 0003 US :

This is a decision on the Request For Issuance To Omit Assignee From Patent Under 37 CFR 3.81(b) and Request For Certificate Of Correction Prior To Issuance Of Patent Under 37 CFR 1.323, filed November 16, 2010, which is being treated as a Petition Under 37 CFR §3.81(b), to omit reference to an assignee's name and residence. A completed Certificate of Correction Form (PTO/SB/44) was submitted with the petition.

The petition under 37 CFR §3.81(b) is **GRANTED**.

Petitioner requests that the present Petition was submitted to omit reference to an assignee's name and residence on the previously submitted PTOL-85B and such error was incorrectly identified. Accordingly, petitioner requests that a Certificate of Correction (PTO/SB/44) be issued to omit the assignee's name and residence to the Title Page of the Letters Patent.

The requisite $100.00 fee (Fee Code 1811) as set forth under 37 CFR 1.20(a), and the requisite $130.00 processing fee (Fee Code 1464), as set forth under 37 CFR 1.17(i), have been submitted.

Inquiries related this communication should be directed to the undersigned at (571)272-3213.

Any questions concerning the issuance of a Certificate of Correction should be directed to the Certificates of Correction Branch at (571) 272-4200.

This matter is being referred to the Certificates of Correction Branch for processing of a Certificate of Correction in U.S. Patent No. 7,849,775.

Cheryl Gibson-Baylor
Petitions Examiner
Office of Petitions

UNITED STATES PATENT AND TRADEMARK OFFICE

COMMISSIONER FOR PATENTS
UNITED STATES PATENT AND TRADEMARK OFFICE
P.O. BOX 1450
ALEXANDRIA, VA 22313-1450
www.uspto.gov

19 AUG 2010

FREESCALE SEMICONDUCTOR, INC.
LAW DEPARTMENT
7700 WEST PARMER LANE MD:TX32/PL02
AUSTIN, TX 78729

In re Application of SCHLUETER	:	
U.S. Application No.: 11/909,398	:	
PCT Application No.: PCT/EP2005/004650	:	DECISION
Int. Filing Date: 01 April 2005	:	
Priority Date Claimed: none	:	
Attorney Docket No.: SC14063ZC	:	
For: CHARGE PUMP AND CONTROL SCHEME	:	

This is in response to the petition under 37 CFR 1.182 filed 12 July 2010.

BACKGROUND

On 21 September 2007, applicant filed purported national stage papers under 35 U.S.C. 371 via the EFS-Web electronic filing system of the USPTO. As evidenced by the EFS-Web Electronic Acknowledgement Receipt, applicant entered the international application number as "PCT/US03/02927" when completing the EFS-Web filing process.

On 23 October 2009, this Office mailed a communication which stated that international application number PCT/US03/02927 did not appear to be consistent with other indications in the papers submitted on 21 September 2007.

On 15 December 2009, applicant filed a response, stating that the correct international application number is PCT/EP05/04650.

On 28 May 2010, this Office mailed a communication which stated that a petition under 37 CFR 1.182 is required to correct the application.

On 12 July 2010, applicant filed the instant petition under 37 CFR 1.182.

DISCUSSION

A review of the papers filed 21 September 2007 reveals that the correct international application number PCT/EP05/04650 was present on, *inter alia*, the application data sheet.

Accordingly, applicant's explanation for the error is accepted and correction of the application is permissible.

CONCLUSION

For the reasons above, the petition under 37 CFR 1.182 is GRANTED.

The application has an International Filing Date under 35 U.S.C. 363 of 01 April 2005, and a date under 35 U.S.C. 371(c)(1), (c)(2), and (c)(4) of 21 September 2007.

This application is being forwarded to the United States Designated/Elected Office (DO/EO/US) for further processing in accordance with this decision.

Bryan Lin

Bryan Lin
PCT Legal Examiner
PCT Legal Office

Telephone: 571-272-3303
Facsimile: 571-273-0459

UNITED STATES PATENT AND TRADEMARK OFFICE

Commissioner for Patents
United States Patent and Trademark Office
P.O. Box 1450
Alexandria, VA 22313-1450
www.uspto.gov

PROSKAUER ROSE LLP
ONE INTERNATIONAL PLACE
BOSTON MA 02110

MAILED
DEC 28 2010
OFFICE OF PETITIONS

In re Application of :
Thomas Flehmig et al. :
Application No. 11/909,427 : DECISION ON PETITION
Filed: February 15, 2008 :
Attorney Docket No. 20496-585 :

This is a decision on the petition under the unintentional provisions of 37 CFR 1.137(b), filed November 10, 2010, to revive the above-identified application.

The petition is **GRANTED**.

The application became abandoned for failure to submit corrected drawings in a timely manner in reply to the Notice of Allowability mailed on July 16, 2010, which set a period for reply of three (3) months. Accordingly, the application became abandoned on October 19, 2010. A Notice of Abandonment was mailed on October 29, 2010.

The petition satisfies the requirements of 37 CFR 1.137(b) in that petitioner has supplied (1) the reply in the form of corrected drawings, (2) the petition fee of $1,620, and (3) a proper statement of unintentional delay. Accordingly, the corrected drawings are accepted as being unintentionally delayed.

Telephone inquiries concerning this decision should be directed to Kimberly Inabinet at (571) 272-4618.

This application is being referred to the Office of Data Management for further processing into a patent.

/Kimberly Inabinet/

Kimberly Inabinet
Petitions Examiner
Office of Petitions

UNITED STATES PATENT AND TRADEMARK OFFICE

COMMISSIONER FOR PATENTS
UNITED STATES PATENT AND TRADEMARK OFFICE
P.O. BOX 1450
ALEXANDRIA, VA 22313-1450
www.uspto.gov

MAILED

NOV 23 2010

OFFICE OF PETITIONS

HOXIE & ASSOCIATES LLC
75 MAIN STREET, SUITE 301
MILLBURN NJ 07041

In re Patent No. 7,723,378		
Bolli et al.	:	DECISION ON
Issued: May 25, 2010	:	PATENT TERM ADJUSTMENT
Application No. 11/909,429	:	AND NOTICE OF INTENT TO ISSUE
Filed: September 21, 2007	:	CERTIFICATE OF CORRECTION
Attorney Docket No. AC-55-US	:	

This is a decision in response to the "REQUEST FOR RECALCULATION OF PATENT TERM ADJUSTMENT PURSUANT TO 37 C.F.R. § 1.705" filed July 26, 2010. Patentees request that the determination of patent term adjustment under 35 U.S.C. 154(b) be reviewed for accuracy; however, they do not state a basis for the request for review of the patent term adjustment.

The request for review of the determination of patent term adjustment (PTA) is **granted**.

The patent term adjustment indicated in the patent is to be corrected by issuance of a certificate of correction showing a revised patent term adjustment of **34 days**.

The application history has been reviewed and it has been concluded that the determination of patent term adjustment under 35 U.S.C. 154(b) of 117 days is incorrect.

Pursuant to 37 CFR 1.704(c)(8):

> (c) Circumstances that constitute a failure of the applicant to engage in reasonable efforts to conclude

processing or examination of an application also include the following circumstances, which will result in the following reduction of the period of adjustment set forth in § 1.703 to the extent that the periods are not overlapping:

> (8) Submission of a supplemental reply or other paper, other than a supplemental reply or other paper expressly requested by the examiner, after a reply has been filed, in which case the period of adjustment set forth in § 1.703 shall be reduced by the number of days, if any, beginning on the day after the date the initial reply was filed and ending on the date that the supplemental reply or other such paper was filed[.]

A review of the record reveals that an additional period of reduction is warranted for filing a second IDS on December 17, 2009. See 37 CFR 1.704(c)(8). The record does not support a conclusion that the examiner expressly requested the IDS filed December 17, 2009. Further, a review the IDS reveals that patentees did not include a statement under 37 CFR 1.704(d).[1] Thus, patentees failed to engage in reasonable efforts to conclude prosecution of the application. Accordingly, a period of reduction of an additional 83 days (from September 26, 2009 to December 17, 2009) is warranted.

In view thereof, the patent should have issued with a revised patent term adjustment of **34 days** (132 days of Office delay - 98 days of applicant delay).

---

[1] Pursuant to 37 CFR 1.704(d):

> A paper containing only an information disclosure statement in compliance with §§ 1.97 and 1.98 will not be considered a failure to engage in reasonable efforts to conclude prosecution (processing or examination) of the application under paragraphs (c)(6), (c)(8), (c)(9), or (c)(10) of this section if it is accompanied by a statement that each item of information contained in the information disclosure statement was first cited in any communication from a foreign patent office in a counterpart application and that this communication was not received by any individual designated in § 1.56(c) more than thirty days prior to the filing of the information disclosure statement. This thirty-day period is not extendable.

The Office acknowledges the submission of the $200.00 petition fee under 37 CFR 1.18(e).

The application is being referred to the Certificates of Correction Branch for issuance of a certificate of correction in order to rectify this error. The Office will issue a certificate of correction indicating that the term of the above-identified patent is extended or adjusted by **34 days**.

Telephone inquiries specific to this matter should be directed to the undersigned at (571) 272-3211.

Christina Tartera Donnell

Christina Tartera Donnell
Senior Petitions Attorney
Office of Petitions

Enclosure: Copy of DRAFT Certificate of Correction

UNITED STATES PATENT AND TRADEMARK OFFICE

CERTIFICATE OF CORRECTION Draft

PATENT : 7,723,378 B2

DATED : May 25, 2010

INVENTOR(S) : Bolli et al.

It is certified that error appears in the above-identified patent and that said Letters Patent is hereby corrected as shown below:

On the cover page,

[*] Notice: Subject to any disclaimer, the term of this patent is extended or adjusted under 35 U.S.C. 154(b) by (117) days.

Delete the phrase "by 117 days" and insert – by 34 days--

UNITED STATES PATENT AND TRADEMARK OFFICE

COMMISSIONER FOR PATENTS
UNITED STATES PATENT AND TRADEMARK OFFICE
P.O. BOX 1450
ALEXANDRIA, VA 22313-1450
www.uspto.gov

10 AUG 2010

DINSMORE & SHOHL LLP
FIFTH THIRD CENTER, ONE SOUTH MAIN STREET
SUITE 1300
DAYTON, OH 45402-2023

In re Application of WARSITO et al	:	
U.S. Application No.: 11/909,548	:	
PCT Application No.: PCT/US2006/010352	:	
Int. Filing Date: 22 March 2006	:	
Priority Date Claimed: 22 March 2005	:	DECISION
Attorney Docket No.: OSU 0029 PA	:	
For: 3D AND REAL-TIME ELECTRICAL CAPACITANCE VOLUME-TOMOGRAPHY: SENSOR DESIGN AND IMAGE RECONSTRUCTION	:	

This is in response to applicant's renewed petition under 37 CFR 1.182 filed 15 July 2010.

BACKGROUND

On 22 March 2006, applicant filed international application PCT/US2006/010352, which claimed priority of an earlier United States application filed 22 March 2005. The thirty-month period for paying the basic national fee in the United States expired on 24 September 2007.

On 24 September 2007, applicant filed national stage papers in the United States Designated/Elected Office (DO/EO/US). The submission was accompanied by, *inter alia*, the basic national fee required by 35 U.S.C. 371(c)(1).

On 14 March 2008, applicant filed a petition under 37 CFR 1.182.

On 18 June 2010, this Office mailed a decision dismissing the 14 March 2008 petition.

On 15 July 2010, applicant filed the instant renewed petition under 37 CFR 1.182.

DISCUSSION

The petition requests that the order of inventors be changed. The petition is accompanied by the $400.00 petition fee required by 37 CFR 1.17(f).

Applicant is advised that the supplemental ADS accompanying the renewed petition is not titled in accordance with 37 CFR 1.76(c)(2).

CONCLUSION

For the reasons above, the renewed petition under 37 CFR 1.182 is GRANTED.

The application is being returned to Technology Center AU 2628 for examination.

Bryan Lin

Bryan Lin
PCT Legal Examiner
PCT Legal Office

Telephone: 571-272-3303
Facsimile: 571-273-0459

ATTACHMENT: Bibliographic Data Sheet

UNITED STATES PATENT AND TRADEMARK OFFICE

Commissioner for Patents
United States Patent and Trademark Office
P.O. Box 1450
Alexandria, VA 22313-1450
www.uspto.gov

YOUNG & THOMPSON
209 Madison Street
Suite 500
Alexandria VA 22314

MAILED

SEP 07 2010

OFFICE OF PETITIONS

In re Application of	:	
Frederic Jouffroy	:	
Application No. 11/909,625	:	DECISION ON PETITION
Filed: July 7, 2008	:	
Attorney Docket No. 0570-1016	:	

This is a decision on the petition under the unintentional provisions of 37 CFR 1.137(b), filed July 12, 2010, to revive the above-identified application.

The petition is **GRANTED**.

This application became abandoned for failure to timely pay the issue and publication fees on or before May 17, 2010, as required by the Notice of Allowance and Fee(s) Due, mailed February 17, 2010. Accordingly, the date of abandonment of this application is May 18, 2010. A Notice of Abandonment was mailed on June 10, 2010.

The petition satisfies the requirements of 37 CFR 1.137(b) in that petitioner has supplied (1) the reply in the form of payment of the issue fee of $755 and the publication fee of $300, (2) the petition fee of $810, and (3) a proper statement of unintentional delay. Accordingly, the issue and publication fees are accepted as being unintentionally delayed.

Telephone inquiries concerning this decision should be directed to Kimberly Inabinet at (571) 272-4618.

This application is being referred to the Office of Data Management for further processing into a patent.

/Kimberly A. Inabinet/

Kimberly A. Inabinet
Petitions Examiner
Office of Petitions

UNITED STATES PATENT AND TRADEMARK OFFICE

UNITED STATES DEPARTMENT OF COMMERCE
United States Patent and Trademark Office
Address: COMMISSIONER FOR PATENTS
P.O. Box 1450
Alexandria, Virginia 22313-1450
www.uspto.gov

APPLICATION NO.	FILING DATE	FIRST NAMED INVENTOR	ATTORNEY DOCKET NO.	CONFIRMATION NO.
11/909,800	07/28/2009	Motohiro Tanno	17401/013001	9576

22511 7590 12/06/2010
OSHA LIANG L.L.P.
TWO HOUSTON CENTER
909 FANNIN, SUITE 3500
HOUSTON, TX 77010

EXAMINER
LU, ZHIYU

ART UNIT	PAPER NUMBER
2618	

NOTIFICATION DATE	DELIVERY MODE
12/06/2010	ELECTRONIC

Please find below and/or attached an Office communication concerning this application or proceeding.

The time period for reply, if any, is set in the attached communication.

Notice of the Office communication was sent electronically on above-indicated "Notification Date" to the following e-mail address(es):

docketing@oshaliang.com
buta@oshaliang.com

UNITED STATES PATENT AND TRADEMARK OFFICE

Commissioner for Patents
United States Patent and Trademark Office
P.O. Box 1450
Alexandria, VA 22313-1450
www.uspto.gov

OSHA LIANG L.L.P.
TWO HOUSTON CENTER
909 FANNIN, SUITE 3500
HOUSTON TX 77010

In re Application of	:	
TANNO, MOTOHIRO, et al.	:	DECISION ON REQUEST TO
Application No. 11/909,800	:	PARTICIPATE IN PATENT
Filed: September 26, 2007	:	PROSECUTION HIGHWAY
Attorney Docket No. **17401/013001**	:	PROGRAM AND PETITION
	:	TO MAKE SPECIAL UNDER
	:	37 CFR 1.102(a)

This is a decision on the request to participate in the Patent Prosecution Highway (PPH) program and the petition under 37 CFR 1.102(a), filed October 26, 2010 to make the above-identified application special.

The request and petition are **GRANTED**.

A grantable request to participate in the PPH program and petition to make special require:

(1) The U.S. application must validly claim priority under 35 U.S.C. 119(a) to one or more applications filed in the JPO;
(2) Applicant must submit a copy of the allowable/patentable claim(s) from the JPO application(s) along with an English translation thereof and a statement that the English translation is accurate;
(3) All the claims in the U.S. application must sufficiently correspond or be amended to sufficiently correspond to the allowable/patentable claim(s) in the JPO application(s);
(4) Examination of the U.S. application has not begun;
(5) Applicant must submit a copy of all the office actions from each of the JPO application(s) containing the allowable/patentable claim(s) along with an English translation thereof and a statement that the English translation is accurate;
(6) Applicant must submit an IDS listing the documents cited by the JPO examiner in the JPO office action along with copies of documents except U.S. patents or U.S. patent application publications; and

The request to participate in the PPH program and petition comply with the above requirements. Accordingly, the above-identified application has been accorded "special" status.

Telephone inquiries concerning this decision should be directed to Kenneth Wieder at 571-272-2986.

All other inquiries concerning the examination or status of the application should be directed to Patent Application Information Retrieval (PAIR) system.

The application is being forwarded to the examiner for action on the merits commensurate with this decision.

/Kenneth A. Wieder/

Kenneth Wieder
Quality Assurance Specialist
Technology Center 2600
Communications

UNITED STATES PATENT AND TRADEMARK OFFICE

Commissioner for Patents
United States Patent and Trademark Office
P.O. Box 1450
Alexandria, VA 22313-1450
www.uspto.gov

DYKAS, SHAVER & NIPPER, LLP
P.O. BOX 877
BOISE, ID 83701-0877

MAILED

SEP 14 2010

OFFICE OF PETITIONS

In re Application of	:	
Iain MACLEOD, et *al.*	:	
Application No. 11/909,820	:	NOTICE UNDER 37 CFR 1.28
Filed: September 27, 2007	:	
Attorney Docket No. **PETR104NUS**	:	

This is a notice regarding your request for acceptance of a fee deficiency submission under 37 CFR 1.28. On September 1, 1998, the Court of Appeals for the Federal Circuit held that 37 CFR 1.28(c) is the sole provision governing the time for correction of the erroneous payment of the issue fee as a small entity. **See DH Technology v. Synergystex International, Inc. 154 F.3d 1333, 47 USPQ2d 1865 (Fed. Cir. Sept. 1, 1998).**

The Office no longer investigates or rejects original or reissue applications under 37 CFR 1.56. **1098 Off. Gaz. Pat. Office 502 (January 3, 1989)**. Therefore, nothing in this Notice is intended to imply that an investigation was done.

Your fee deficiency submission under 37 CFR 1.28 is hereby **ACCEPTED**.

This application is no longer entitled to small entity status. Accordingly, all future fees paid in this application must be paid at the large entity rate.

Inquiries related to this communication should be directed to the undersigned at (571) 272-7253.

/Monica A. Graves/
Petitions Examiner, Office of Petitions

SPE RESPONSE FOR CERTIFICATE OF CORRECTION

DATE : 06-08-11

TO SPE OF : ART UNIT 1641

SUBJECT : Request for Certificate of Correction for Appl. No.: 11/909956 Patent No.: 7842500

CofC mailroom date: 06-03-11

Please respond to this request for a certificate of correction within 7 days.

FOR IFW FILES:

Please review the requested changes/corrections as shown in the **COCIN** document(s) in the IFW application image. No new matter should be introduced, nor should the scope or meaning of the claims be changed.

Please complete the response (see below) and forward the completed response to scanning using document code **COCX**.

FOR PAPER FILES:

Please review the requested changes/corrections as shown in the attached certificate of correction. Please complete this form (see below) and forward it with the file to:

Certificates of Correction Branch (CofC)
Randolph Square – 9D10-A
Palm Location 7580

Angela Green 571.272.9005
CofC Branch 703-756-1814

Note:

Thank You For Your Assistance

The request for issuing the above-identified correction(s) is hereby:
Note your decision on the appropriate box.

- ☒ **Approved** — **All** changes apply.
- ☐ **Approved in Part** — Specify below which changes **do not** apply.
- ☐ **Denied** — State the reasons for denial below.

Comments:

SPE /Mark Shibuya/ **Art Unit** 1641

UNITED STATES PATENT AND TRADEMARK OFFICE

Commissioner for Patents
United States Patent and Trademark Office
P.O. Box 1450
Alexandria, VA 22313-1450
www.uspto.gov

DICKINSON WRIGHT PLLC
1875 Eye Street, NW
Suite 1200
WASHINGTON DC 20006

MAILED

MAR 22 2012

OFFICE OF PETITIONS

In re Application of
Morilhat, et al.
Application No. 11/909,990
Filed: December 6, 2007
Attorney Docket No. JC0225US (21407-144)

: ON PETITION

This is a decision on the petition under the unintentional provisions of 37 CFR 1.137(b), filed March 5, 2012, to revive the above-identified application.

The petition is GRANTED.

This application became abandoned February 4, 2010 for failure to timely submit a proper reply to the final Office action mailed November 3, 2009. The final Office action set a three (3) month shortened statutory period of time for reply. Notice of Abandonment was mailed June 2, 2010.

A grantable petition under 37 CFR 1.137(b) must be accompanied by: (1) the required reply, unless previously filed; (2) the petition fee as set forth in 37 CFR 1.17(l); (3) a showing to the satisfaction of the Commissioner that the entire delay in filing the required reply from the due date for the reply until the filing of a grantable petition pursuant to 37 CFR 1.137(b) was unintentional; and (4) any terminal disclaimer (and fee as set forth in 37 CFR 1.20(d)) required pursuant to 37 CFR 1.137(c).

The instant petition has been reviewed and found in compliance with the provisions of 37 CFR 1.137(b). Accordingly, the failure to timely submit a proper reply to the final Office action is accepted as having been unintentionally delayed.

This application file is being forwarded to Technology Center 3600 for processing of the RCE submitted herewith.

Telephone inquiries concerning this decision should be directed to the undersigned at (571) 272-3205.

/ALESIA M. BROWN/

Alesia M. Brown
Attorney Advisor
Office of Petitions

SPE RESPONSE FOR CERTIFICATE OF CORRECTION

Paper No.: _____

DATE : 4/28/11

TO SPE OF : ART UNIT 2618

SUBJECT : Request for Certificate of Correction for Appl. No.: 11910127 Patent No.: 7865207

CofC mailroom date: 04/22/11

Please respond to this request for a certificate of correction within 7 days.

FOR IFW FILES:

Please review the requested changes/corrections as shown in the **COCIN** document(s) in the IFW application image. No new matter should be introduced, nor should the scope or meaning of the claims be changed.

Please complete the response (see below) and forward the completed response to scanning using document code **COCX**.

FOR PAPER FILES:

Please review the requested changes/corrections as shown in the attached certificate of correction. Please complete this form (see below) and forward it with the file to:

Certificates of Correction Branch (CofC)
Randolph Square – 9D10-A
Palm Location 7580
You can fax the Directors/SPE response to 571-270-9990

Lamonte Newsome
Certificates of Correction Branch
571-272-3421

Thank You For Your Assistance

The request for issuing the above-identified correction(s) is hereby:
Note your decision on the appropriate box.

X Approved	All changes apply.
☐ **Approved in Part**	Specify below which changes **do not** apply.
☐ **Denied**	State the reasons for denial below.

Comments: _____

PAGE 2/3 * RCVD AT 5/8/2011 9:28:44 PM [Eastern Daylight Time] * SVR:W-PTOFAX-002/48 * DNIS:2709990 * CSID: * DURATION (mm-ss):00-00

SPE RESPONSE FOR CERTIFICATE OF CORRECTION

/Nay Maung/ 2618

SPE Art Unit

PAGE 3/3 * RCVD AT 5/8/2011 9:28:44 PM [Eastern Daylight Time] * SVR:W-PTOFAX-002/48 * DNIS:2709990 * CSID: * DURATION (mm-ss):00-00

SPE RESPONSE FOR CERTIFICATE OF CORRECTION

Paper No.: _____

DATE : **October 4, 2010**

TO SPE OF : ART UNIT **1786 - SPE**

SUBJECT : Request for Certificate of Correction for Appl. No.: **11/910,161** Patent No.: **7,745,020 B2**

Please respond to this request for a certificate of correction within 7 days.

FOR IFW FILES:

Please review the requested changes/corrections as shown in the **COCIN** document(s) in the IFW application image. No new matter should be introduced, nor should the scope or meaning of the claims be changed.

Please complete the response (see below) and forward the completed response to scanning using document code **COCX**.

FOR PAPER FILES:

Please review the requested changes/corrections as shown in the attached certificate of correction. Please complete this form (see below) and forward it with the file to:

Certificates of Correction Branch (CofC)
Randolph Square Building
2800 South Randolph Street
Arlington, VA 22206

Antonio Johnson

Should the date for Item (86) date for PCT/KR2007/000114 should be changed from "September 28, 2007" to "January 8, 2007"?
See COCIN dated 09-16-2010

Certificates of Correction Branch

(571)272-0483

Thank You For Your Assistance

The request for issuing the above-identified correction(s) is hereby:
Note your decision on the appropriate box.

X **Approved**	**All** changes apply.
❑ **Approved in Part**	Specify below which changes **do not** apply.
❑ **Denied**	State the reasons for denial below.

Comments: **OK to enter**

SPE /D. Lawrence Tarazano / **Art Unit 1786**

UNITED STATES PATENT AND TRADEMARK OFFICE

UNITED STATES DEPARTMENT OF COMMERCE
United States Patent and Trademark Office
Address: COMMISSIONER FOR PATENTS
P.O. Box 1450
Alexandria, Virginia 22313-1450
www.uspto.gov

APPLICATION NO.	FILING DATE	FIRST NAMED INVENTOR	ATTORNEY DOCKET NO.	CONFIRMATION NO.
11/910,236	02/25/2009	Hiroshi Yahata	P42943-01	3830

42212 7590 06/14/2011
PANASONIC PATENT CENTER
1130 CONNECTICUT AVENUE NW, SUITE 1100
WASHINGTON, DC 20036

EXAMINER
CHOWDHURY, NIGAR

ART UNIT	PAPER NUMBER
2484	

NOTIFICATION DATE	DELIVERY MODE
06/14/2011	ELECTRONIC

Please find below and/or attached an Office communication concerning this application or proceeding.

The time period for reply, if any, is set in the attached communication.

Notice of the Office communication was sent electronically on above-indicated "Notification Date" to the following e-mail address(es):

ppc@us.panasonic.com
Dhiren.Odedra@us.panasonic.com
idogawa.y@jp.panasonic.com

UNITED STATES PATENT AND TRADEMARK OFFICE

Commissioner for Patents
United States Patent and Trademark Office
P.O. Box 1450
Alexandria, VA 22313-1450
www.uspto.gov

Panasonic Patent Center
1130 Connecticut Avenue, NW suite 1100
Washington DC 20036

In re Application of: Yahata et al.
Application No. 11/910236
Filed: August 7, 2008
For: Recording Medium, Reproducing Device, Recording Method, and Reproducing Method

DECISION ON REQUEST TO PARTICIPATE IN PATENT PROSECUTION HIGHWAY PROGRAM AND PETITION TO MAKE SPECIAL UNDER 37 CFR 1.102(d)

This is a decision on the request to participate in the Patent Prosecution Highway (PPH) program and the petition under 37 CFR 1.102(d), filed March 3, 2011, to make the above-identified application special.

The petition is **GRANTED.**

A grantable request to participate in the PPH program and petition to make special require:

(1) The U.S. application is
   (a) a Paris Convention application which either (i) validly claims priority under 35 U.S.C. 119(a) and 37 CFR 1.55 to one or more applications filed in the JPO, or (ii) validly claims priority to a PCT application that contains no priority claims, or
   (b) a national stage application under the PCT (an application which entered the national stage in the U.S. from a PCT international application after compliance with 35 U.S.C. 371), which PCT application (i) validly claims priority to an application filed in the JPO, or (ii) validly claims priority to a PCT application that contains no priority claims, or (iii) contains no priority claim, or
   (c) a so-called bypass application filed under 35 U.S.C. 111 (a) which validly claims benefit under 35 U.S.C. 120 to a PCT application, which PCT application (i) validly claims priority to an application filed in the JPO, or (ii) validly claims priority to a PCT application that contains no priority claims, or (iii) contains no priority claim.

Where the JPO application that contains the allowable/patentable claims is not the same application for which priority is claimed in the U.S. application, applicant must identify the relationship between the JPO application that contains the allowable/patentable claims and the JPO priority application claimed in the U.S. application.

(2) Applicant must submit a copy of: (a) the allowable/patentable claim(s) from the Japanese application(s), (b) an English translation of the allowable/patentable claim(s), if the claims were published in a language other than English); and (c) a statement that the English translation is accurate.

(3) All the claims in the U.S. application must sufficiently correspond to the allowable/patentable claim(s) in the JPO application(s) and Applicant must submit a claim correspondence table in English.

(4) Examination of the U.S. application has not begun.

(5) Applicant must submit: (a) a copy of all the office action(s) (which are relevant to patentability), excluding "Decision to Grant a Patent" from each of the Japanese application(s) containing the allowable/patentable claim(s), (b) an English language translation of the JPO office action(s) (if the office action(s) are not in the English language) and (c) a statement that the English translation is accurate.

(6) Applicant must submit: (a) an IDS listing the documents cited by the JPO examiner in the JPO office action (unless already filed in this application) and (b) copies of all the documents cited in the JPO office action, except U.S. patents or U.S. patent application publications (unless already filed in this application).

(7) The required petition fee under 37 CFR 1.17(h) if filed before May 25, 2010.

The request to participate in the PPH program and petition are found to comply with all the above requirements. Accordingly, the above-identified application has been accorded "special" status.

Telephone inquiries concerning this decision should be directed to Tod Swann at 571-272-3612.

All other inquiries concerning the examination or status of the application is accessible in the PAIR system at http://www.uspto.gov/ebc/index.html.

The application is being forwarded to the examiner for action on the merits commensurate with this decision.

/Tod Swann/

Tod Swann
Quality Assurance Specialist
Technology Center 2400

UNITED STATES PATENT AND TRADEMARK OFFICE

UNITED STATES DEPARTMENT OF COMMERCE
United States Patent and Trademark Office
Address: COMMISSIONER FOR PATENTS
P.O. Box 1450
Alexandria, Virginia 22313-1450
www.uspto.gov

APPLICATION NO.	FILING DATE	FIRST NAMED INVENTOR	ATTORNEY DOCKET NO.	CONFIRMATION NO.
11/910,243	01/12/2009	Hiroshi Yahata	P42941-01	3952

42212 7590 06/09/2011
PANASONIC PATENT CENTER
1130 CONNECTICUT AVENUE NW, SUITE 1100
WASHINGTON, DC 20036

EXAMINER
TRAN, THAI Q

ART UNIT	PAPER NUMBER
2484	

NOTIFICATION DATE	DELIVERY MODE
06/09/2011	ELECTRONIC

Please find below and/or attached an Office communication concerning this application or proceeding.

The time period for reply, if any, is set in the attached communication.

Notice of the Office communication was sent electronically on above-indicated "Notification Date" to the following e-mail address(es):

ppc@us.panasonic.com
Dhiren.Odedra@us.panasonic.com
idogawa.y@jp.panasonic.com

UNITED STATES PATENT AND TRADEMARK OFFICE

Commissioner for Patents
United States Patent and Trademark Office
P.O. Box 1450
Alexandria, VA 22313-1450
www.uspto.gov

PANASONIC PATENT CENTER
1130 CONNECTICUT AVENUE NW, SUITE 1100
WASHINGTON DC 20036

In re Application of: YAHATA et al.
Application No. 11/910,243
Filed: Sept 28, 2007
For: RECORDING MEDIUM, REPRODUCING DEVICE, RECORDING METHOD AND REPRODUCING METHOD

DECISION ON REQUEST TO PARTICIPATE IN PATENT PROSECUTION HIGHWAY PILOT PROGRAM AND PETITION TO MAKE SPECIAL UNDER 37 CFR 1.102(d)

This is a decision on the request to participate in the Patent Prosecution Highway (PPH) program and the petition under 37 CFR 1.102(d), filed Mar 03, 2011, to make the above-identified application special.

The request and petition are **GRANTED**.

A grantable request to participate in the PPH program and petition to make special require:

(1) The U.S. application is
(a) a Paris Convention application which either
(i) validly claims priority under 35 U.S.C. 119(a) and 37 CFR 1.55 to one or more applications filed in the JPO, or
(ii) validly claims priority to a PCT application that contains no priority claims,

Or

(b) a national stage application under the PCT (an application which entered the national stage in the U.S. from a PCT international application after compliance with 35 U.S.C. 371), which PCT application
(i) validly claims priority to an application filed in the JPO, or
(ii) validly claims priority to a PCT application that contains no priority claims, or
(iii) contains no priority claim,

Or

(c) a so-called bypass application filed under 35 U.S.C. 111 (a) which validly claims benefit under 35 U.S.C. 120 to a PCT application, which PCT application
(i) validly claims priority to an application filed in the JPO, or

(ii) validly claims priority to a PCT application that contains no priority claims, or
(iii) contains no priority claim.

Where the JPO application that contains the allowable/patentable claims is not the same application for which priority is claimed in the U.S. application, applicant must identify the relationship between the JPO application that contains the allowable/patentable claims and the JPO priority application claimed in the U.S. application.

(2) Applicant must submit a copy of:
a. The allowable/patentable claim(s) from the JPO application(s) or if a copy of the allowable/patentable claims is available via the Dossier Access System (DAS) applicant may request the USPTO obtain a copy from the DAS, however if the USPTO is unable to obtain a copy from the DAS the applicant will be required to submit a copy;
b. An English translation of the allowable/patentable claim(s) and
c. A statement that the English translation is accurate;

(3) Applicant must:
a. Ensure all the claims in the U.S. application must sufficiently correspond or be amended to sufficiently correspond to the allowable/patentable claim(s) in the JPO application(s) and
b. Submit a claims correspondence table in English;

(4) Examination of the U.S. application has not begun;

(5) Applicant must submit:
a. Documentation of prior office action:
i. a copy of the office action(s)just prior to the "Decision to Grant a Patent" from each of the JPO application(s) containing the allowable/patentable claim(s) or
ii. if the identification of allowable/patentable claims(s) are from a "Notification of Reasons for Refusal" then the Notification of Reasons for Refusal or
iii. if the JPO application is a first action allowance then applicant should indicate no office action from the JPO is necessary on the request/petition form;

b. An English language translation of the JPO Office action from (5)(a)(i)-(ii) above
c. A statement that the English translation is accurate;

(6) Applicant must submit:
a. An IDS listing the documents cited by the JPO examiner in the JPO office action (unless already submitted in this application)
b. Copies of the documents except U.S. patents or U.S. patent application publications (unless already submitted in this application);

The request to participate in the PPH pilot program and petition are found to comply with the above requirements. Accordingly, the above-identified application has been accorded "special" status.

Telephone inquiries concerning this decision should be directed to Kim Huynh at 571-272-4147.

All other inquiries concerning the examination or status of the application is accessible in the PAIR system at http://www.uspto.gov/ebc/index.html.

/Kim Huynh/

Kim Huynh
Quality Assurance Specialist
Technology Center 2400

UNITED STATES PATENT AND TRADEMARK OFFICE

Commissioner for Patents
United States Patent and Trademark Office
P.O. Box 1450
Alexandria, VA 22313-1450
www.uspto.gov

OSHA LIANG, LLP
TWO HOUSTON CENTER
909 FANNIN, SUITE 3500
HOUSTON, TX 77010

MAILED
OCT 24 2011
OFFICE OF PETITIONS

In re Application of	:	
Yoshihisa Kishiyama, et al.	:	
Application No. 11/910,246	:	DECISION GRANTING PETITION
Filed: February 26, 2009	:	UNDER 37 CFR 1.313(c)(2)
Attorney Docket No. 17401/016001	:	

This is a decision on the petition under 37 CFR 1.313(c)(2), filed October 21, 2011, to withdraw the above-identified application from issue after payment of the issue fee.

The petition is **GRANTED**.

The above-identified application is withdrawn from issue for consideration of a submission under 37 CFR 1.114 (request for continued examination). *See* 37 CFR 1.313(c)(2).

Petitioner is advised that the issue fee paid on August 12, 2011 cannot be refunded. If, however, this application is again allowed, petitioner may request that it be applied towards the issue fee required by the new Notice of Allowance.[1]

Telephone inquiries regarding this decision should be directed to undersigned at (571) 272-1642. All other inquiries concerning the examination or status of this application should be directed to the Technology Center.

This application is being referred to Technology Center AU 2476 for processing of the request for continued examination under 37 CFR 1.114 and for consideration of the concurrently filed information disclosure statement.

/AMW/
April M. Wise
Petitions Examiner
Office of Petitions

---

[1] *The request to apply the issue fee to the new Notice may be satisfied by completing and returning the new Part B – Fee(s) Transmittal Form (along with any balance due at the time of submission). Petitioner is advised that the Issue Fee Transmittal Form must be completed and timely submitted to avoid abandonment of the application.*

UNITED STATES PATENT AND TRADEMARK OFFICE

UNITED STATES DEPARTMENT OF COMMERCE
United States Patent and Trademark Office
Address: COMMISSIONER FOR PATENTS
P.O. Box 1450
Alexandria, Virginia 22313-1450
www.uspto.gov

APPLICATION NO.	FILING DATE	FIRST NAMED INVENTOR	ATTORNEY DOCKET NO.	CONFIRMATION NO.
11/910,249	12/03/2008	Hiroshi Yahata	P42942-02	4093

42212 7590 11/09/2010
PANASONIC PATENT CENTER
1130 CONNECTICUT AVENUE NW, SUITE 1100
WASHINGTON, DC 20036

EXAMINER
TRAN, THAI Q

ART UNIT	PAPER NUMBER
2484	

NOTIFICATION DATE	DELIVERY MODE
11/09/2010	ELECTRONIC

Please find below and/or attached an Office communication concerning this application or proceeding.

The time period for reply, if any, is set in the attached communication.

Notice of the Office communication was sent electronically on above-indicated "Notification Date" to the following e-mail address(es):

ppc@us.panasonic.com
Dhiren.Odedra@us.panasonic.com
Noriko.Matsumoto@ext.us.panasonic.com

UNITED STATES PATENT AND TRADEMARK OFFICE

Commissioner for Patents
United States Patent and Trademark Office
P.O. Box 1450
Alexandria, VA 22313-1450
www.uspto.gov

MAILED

NOV 09 2010

DIRECTOR OFFICE
TECHNOLOGY CENTER 2400

PANASONIC PATENT CENTER
1130 CONNECTICUT AVENUE NW, SUITE 1100
WASHINGTON, DC 20036

In re Application of
YAHATA, HIROSHI , et al.
Application No. 11/910,249
Filed: December 3, 2008
Attorney Docket No. **P42942-02**

DECISION ON REQUEST TO PARTICIPATE IN PATENT PROSECUTION HIGHWAY PROGRAM AND PETITION TO MAKE SPECIAL UNDER 37 CFR 1.102(d)

This is a decision on the request to participate in the Patent Prosecution Highway (PPH) program and the petition under 37 CFR 1.102(d), filed August 4, 2010 to make the above-identified application special.

The request and petition are **GRANTED**.

A grantable request to participate in the PPH program and petition to make special require:

(1) The U.S. application must validly claim priority under 35 U.S.C. 119(a) to one or more applications filed in the JPO;
(2) Applicant must submit a copy of the allowable/patentable claim(s) from the JPO application(s) along with an English translation thereof and a statement that the English translation is accurate;
(3) All the claims in the U.S. application must sufficiently correspond or be amended to sufficiently correspond to the allowable/patentable claim(s) in the JPO application(s);
(4) Examination of the U.S. application has not begun;
(5) Applicant must submit a copy of all the office actions from each of the JPO application(s) containing the allowable/patentable claim(s) along with an English translation thereof and a statement that the English translation is accurate; and
(6) Applicant must submit an IDS listing the documents cited by the JPO examiner in the JPO office action along with copies of documents except U.S. patents or U.S. patent application publications;

The request to participate in the PPH program and petition comply with the above requirements. Accordingly, the above-identified application has been accorded "special" status.

Telephone inquiries concerning this decision should be directed to Mehrdad Dastouri at 571-272-7418.

All other inquiries concerning the examination or status of the application should be directed to Patent Application Information Retrieval (PAIR) system.

The application will be forwarded to the examiner for action on the merits commensurate with this decision.

/Mehrdad Dastouri/

Mehrdad Dastouri
Quality Assurance Specialist
Technology Center 2400

UNITED STATES PATENT AND TRADEMARK OFFICE

Commissioner for Patents
United States Patent and Trademark Office
P.O. Box 1450
Alexandria, VA 22313-1450
www.uspto.gov

30623
MINTZ, LEVIN, COHN, FERRIS, GLOVSKY AND POPEO, P.C.
One Financial Center
Boston, MA 02111

MAILED

MAR 03 2011

PCT LEGAL ADMINISTRATION

In re Application of
JULIUSSON, Bengt
U.S. Application No.: 11/910,285
PCT No.: PCT/DK2006/000185
Int. Filing Date: 30 March 2006
Priority Date: 01 April 2005
Docket No.: 19313-025N01US
For: A HUMAN IMMORTALISED NEURAL PRECURSOR CELL LINE

DECISION ON PETITION UNDER 37 CFR 1.137(b)

Applicant's petition to revive under 37 CFR 1.137(b) filed on 21 April 2008 is hereby **GRANTED** as follows:

The proper fees and the petition fee have been paid. Applicant made the required statement pursuant to 37 CFR 1.137(b)(3). A terminal disclaimer is not required. Accordingly, all requirements under 37 CFR 1.137(b) have been satisfied.

This application is being forwarded to the United States Designated/Elected Office for further processing.

James Thomson

James Thomson
Attorney Advisor
Office of PCT Legal Administration

Tel.: (571) 272-3302

UNITED STATES PATENT AND TRADEMARK OFFICE

MAILED

MAR 10 2011

PCT LEGAL ADMINISTRATION

Commissioner for Patents
United States Patent and Trademark Office
P.O. Box 1450
Alexandria, VA 22313-1450
www.uspto.gov

POLSINELLI SHUGHART PC
700 W. 47TH STREET
SUITE 1000
KANSAS CITY, MO 64112-1802

In re Application of:
BEDARD, Stephane, et al.
U.S. Application No.: 11/910,324
PCT No.: PCT/CA2005/000488
International Filing Date: 31 March 2005
Priority Date: 31 March 2005
Atty Docket No.: 055722.002800.00USNP
For: CALF EXERCISER

DECISION
(37 CFR 1.137(b))

This decision is issued in response to the petition for revival under 37 CFR 1.137(b) filed 06 January 2011. Petitioner has paid the applicable petition fee.

BACKGROUND

On 31 March 2005, applicants filed international application PCT/CA2005/000488. The international application did not claim an earlier priority date, and it designated the United States. On 05 October 2006, the International Bureau (IB) communicated a copy of the international application to the United States Patent and Trademark Office (USPTO). The deadline for entry into the U.S. national stage and payment of the basic national fee was thirty months from the priority date, i.e., 01 October 2007 (30 September 2007 was a Sunday).

On 01 October 2007, applicants filed a Transmittal Letter for entry into the national stage in the United States accompanied by, among other materials, payment of the small entity basic national fee.

On 14 April 2008, applicants filed herein an executed declaration in compliance with 37 CFR 1.497 and the $65 small-entity surcharge for filing the declaration later than thirty months after the priority date.

On 22 April 2008, the United States Designated/Elected Office (DO/EO/US) mailed a Notification Of Missing Requirements (Form PCT/DO/EO/905) indicating that an oath or declaration in compliance with 37 CFR 1.497 and the surcharge for filing the oath or declaration later than thirty months after the priority date were required.

On 07 January 2009, the DO/EO/US mailed a "Notification Of Abandonment" (Form PCT/DO/EO/909) indicating that the application was abandoned based on applicants failure to file a timely response to the Notification Of Missing Requirements mailed 22 April 2008.

On 06 January 2011, applicants filed the petition for revival under 37 CFR 1.137(b) considered herein.

DISCUSSION

As noted above, on 14 April 2008, applicants filed herein an executed declaration in compliance with 37 CFR 1.497 and payment of the surcharge for filing the declaration later than thirty months after the priority date. The Notification Of Missing Requirements mailed 22 April 2008, which required submission of the previously filed declaration and surcharge payment, was therefore issued in error and is appropriately vacated. The Notification Of Abandonment mailed 07 January 2009, based as it was on applicants' purported failure to timely file the declaration and surcharge payment required by the now-vacated Notification Of Missing Requirements, is also appropriately vacated, and the holding of abandonment is properly withdrawn.

In view of the above, applicants' petition to revive the application under 37 CFR 1.137(b) is moot. The fees submitted with the petition, including the $810 petition fee, $1,175 extension fee, and the duplicative $65 surcharge payment, will be refunded to Deposit Account 50-1662.

CONCLUSION

The holding of abandonment in the present application is withdrawn.

The "Notification Of Missing Requirements (Form PCT/DO/EO/905) mailed 22 April 2008 and the "Notification Of Abandonment" (Form PCT/DO/EO/909) mailed 07 January 2009 are hereby **VACATED**

The petition for revival of the application under 37 CFR 1.137(b) filed 06 January 2011 is **DISMISSED AS MOOT**.

Deposit Account No. 50-1662 will be credited with a refund of the $810 petition fee, $1,175 extension fee, and the duplicative $65 surcharge payment submitted with the unnecessary petition for revival.

This application is being returned to the National Stage Processing Branch of the International Division for further processing in accordance with this decision. The date under 35 U.S.C. 371(c)(1), (c)(2), and (c)(4) is 14 April 2008.

/RichardMRoss/

Richard M. Ross
Attorney Advisor
Office of PCT Legal Administration
Telephone: (571) 272-3296

UNITED STATES PATENT AND TRADEMARK OFFICE

Commissioner for Patents
United States Patent and Trademark Office
P.O. Box 1450
Alexandria, VA 22313-1450
www.uspto.gov

MAILED
NOV 04 2011
OFFICE OF PETITIONS

MARK D. SARALINO (PAN)
RENNER, OTTO, BOISSELLE & SKLAR, LLP
1621 EUCLID AVENUE
19TH FLOOR
CLEVELAND OH 44115

In re Application of	:	
Michinori SATO	:	
Application No. 11/910,338	:	**ON PETITION**
Filed: October 1, 2007	:	
Attorney Docket No. OKUDP0254US	:	

This is a decision on the petition under 37 CFR 1.59(b), filed May 27, 2011, requesting that the Response document filed on May 27, 2011 as EFS ID No. 10185309 be expunged.

The petition is **DISMISSED AS MOOT**.

Petitioner requests that the Response document filed on May 27, 2011 in the above-identified application be transferred to the application Serial No. 12/017,093 as it was incorrectly submitted therein.

MPEP 502 states:

> A minor error in the identification of the application can be corrected by the Office provided the correct information identification can be quickly discovered. Examples of minor errors are transposed number, typographical errors, and listing the parent application number.

MPEP 724.05(III) states:

> Where the Office can determine the correct application file that the papers were actually intended for, based on identifying information in the heading of the papers (e.g. application number, filing date, title of invention and inventor(s) name(s)), the Office will transfer the papers to the correct application file for which they were intended without the need of a petition.

The Response document received in above-identified application on May 27, 2011 was filed by EFS-Web in an incorrect application, however, it was filed with the correct application serial number, attorney docket number, title of invention, and inventor's name. Accordingly, the paper provided enough identifying indicia for the Office to transfer the paper to the correct application file.

In view of the above the Response document filed on May 27, 2011 has been transferred to the correct application Serial No. 12/017,093.

Petitioner previously submitted the $200 petition fee on May 27, 2011. Accordingly, the $200 petition fee submitted with the petition is unnecessary and will be refunded in due course.

Telephone inquiries concerning this decision should be directed to Wilson Lee at (571) 272-1824 or in his absence, the undersigned at (571) 272-7099.

The application file is being referred to Technology Center AU 2627 for further processing.

David Bucci
Petitions Examiner
Office of Petitions

UNITED STATES PATENT AND TRADEMARK OFFICE

Commissioner for Patents
United States Patent and Trademark Office
P.O. Box 1450
Alexandria, VA 22313-1450
www.uspto.gov

Date Mailed : January 13, 2012

Patent No. : 7990344
Inventor : Toshiyuki Maeda et al.
Patent Issued : August 2, 2011
Title : PLASMA DISPLAY PANEL DRIVING METHOD HAVING A HIGH :TEMPERATURE AND LOW TEMPERATURE DRIVING MODE AND PLASMA :DISPLAY DEVICE THEREFORE

Re: Request for Certificate of Correction

Consideration has been given your request for the issuance of a certificate of correction for the above-identified patent.

Review of the application file reveals that correspondence to support entry of reference data, item (56) of Title page. as noted in applicants' request for correction is not found in the records of the Patent and Trademark office. Accordingly, a signed and dated copy of applicants 1449 or PTO-892 reflecting the requested references considered by the examiner is required for further consideration. If omitted references were submitted by applicant, a copy of the receipt obtained from this office should be included.

In view of the foregoing, applicants request is hereby denied. Any telephone inquiries concerning this communication should be directed to Ms. A. Green at (571) 272-9005.

Mary Diggs, Supervisor
Decisions and Certificates of
Correction Branch
(703) 756-1580 or (571) 272-9005

RatnerPrestia
P.O. Box 980
Valley Forge, PA 19482

/arg

UNITED STATES PATENT AND TRADEMARK OFFICE

Commissioner for Patents
United States Patent and Trademark Office
P.O. Box 1450
Alexandria, VA 22313-1450
www.uspto.gov

MAILED
SEP 16 2011
OFFICE OF PETITIONS

K&L GATES LLP
P.O. BOX 1135
CHICAGO, IL 60690

In re Application of	:	
Mitsunari Hoshi	:	
Application No. 11/910,432	:	DECISION GRANTING PETITION
Filed: March 19, 2009	:	UNDER 37 CFR 1.313(c)(2)
Attorney Docket No. 3712174-00863	:	

This is a decision on the petition under 37 CFR 1.313(c)(2), filed, September 14, 2011 to withdraw the above-identified application from issue after payment of the issue fee.

The petition is **GRANTED**.

The above-identified application is withdrawn from issue for consideration of a submission under 37 CFR 1.114 (request for continued examination). *See* 37 CFR 1.313(c)(2).

Petitioner is advised that the issue fee paid on September 1, 2011 in the above-identified application cannot be refunded. If, however, the above-identified application is again allowed, petitioner may request that it be applied towards the issue fee required by the new Notice of Allowance.[1]

Telephone inquiries should be directed to Irvin Dingle at (571) 272-3210.

This matter is being referred to Technology Center AU 2874 for processing of the request for continued examination under 37 CFR 1.114 and for consideration of the concurrently filed Information Disclosure Statement.

/Irvin Dingle/
Irvin Dingle
Petitions Examiner
Office of Petitions

[1] The request to apply the issue fee to the new Notice may be satisfied by completing and returning the new Issue Fee Transmittal Form PTOL-85(b), which includes the following language thereon: Commissioner for Patents is requested to apply the Issue Fee and Publication Fee (if any) or re-apply any previously paid issue fee to the application identified above. Petitioner is advised that, whether a fee is indicated as being due or not, the Issue Fee Transmittal Form must be completed and timely submitted to avoid abandonment. Note the language in bold text on the first page of the Notice of Allowance and Fee(s) Due (PTOL-85).

SPE RESPONSE FOR CERTIFICATE OF CORRECTION

Paper No.: _____

DATE : 01/30/11

TO SPE OF : ART UNIT 2822

SUBJECT : Request for Certificate of Correction for Appl. No.: 11910449 Patent No.: 7692280

CofC mailroom date: 01/10/11

Please respond to this request for a certificate of correction within 7 days.

FOR IFW FILES:

Please review the requested changes/corrections as shown in the **COCIN** document(s) in the IFW application image. No new matter should be introduced, nor should the scope or meaning of the claims be changed.

Please complete the response (see below) and forward the completed response to scanning using document code **COCX**.

FOR PAPER FILES:

Please review the requested changes/corrections as shown in the attached certificate of correction. Please complete this form (see below) and forward it with the file to:

Certificates of Correction Branch (CofC)
Randolph Square – 9D10-A
Palm Location 7580

You can fax the Directors/SPE response to 571-270-9990

_____
Certificates of Correction Branch

703-756-1814 _____

Thank You For Your Assistance

The request for issuing the above-identified correction(s) is hereby:
Note your decision on the appropriate box.

X **Approved**	**All** changes apply.
❑ **Approved in Part**	Specify below which changes **do not** apply.
❑ **Denied**	State the reasons for denial below.

Comments: _____

/Zandra Smith/

SPE RESPONSE FOR CERTIFICATE OF CORRECTION

SPE Art Unit 2822

UNITED STATES PATENT AND TRADEMARK OFFICE

Commissioner for Patents
United States Patent and Trademark Office
P.O. Box 1450
Alexandria, VA 22313-1450
www.uspto.gov

ALSTON & BIRD LLP
BANK OF AMERICA PLAZA
101 SOUTH TRYON STREET, SUITE 4000
CHARLOTTE NC 28280-4000

MAILED
AUG 24 2011
OFFICE OF PETITIONS

In re Application of	:	
Pytel et al.	:	
Application No. 11/910,492	:	DECISION ON PETITION
Filed: April 7, 2008	:	
Attorney Docket No. 033794/333419	:	

This is a decision on the petition under the unintentional provisions of 37 CFR 1.137(b), filed July 26, 2011, to revive the above-identified application.

The petition is **GRANTED**.

The application became abandoned for failure to reply in a timely manner to the non-final Office action mailed, January 20, 2011, which set a shortened statutory period for reply of three (3) months. No extensions of time under the provisions of 37 CFR 1.136(a) were timely obtained. Accordingly, the application became abandoned on April 21, 2011.

The petition satisfies the requirements of 37 CFR 1.137(b) in that petitioner has supplied (1) the reply in the form of an Amendment, (2) the petition fee of $1,620.00, and (3) a proper statement of unintentional delay.

Additionally, an extension of time under 37 CFR 1.136 must be filed prior to the expiration of the maximum extendable period for reply. *See* In re Application of S., 8 USPQ2d 1630, 1631 (Comm'r Pats. 1988). Since the $1,110.00, three- month extension of time fee submitted with the petition on July 26, 2011 was subsequent to the maximum extendable period for reply, this fee is unnecessary and will be refunded to petitioner's deposit account in due course.

Telephone inquiries concerning this decision should be directed to the undersigned at (571) 272-7751.

This application is being referred to Technology Center AU 1637 for further appropriate action by the Examiner in the normal course of business on the reply received.

/Joan Olszewski/
Joan Olszewski
Petitions Examiner
Office of Petitions

SPE RESPONSE FOR CERTIFICATE OF CORRECTION

DATE : 03/15/12

TO SPE OF : ART UNIT 1627

SUBJECT : Request for Certificate of Correction for Appl. No.: 11910500 Patent No.: 8114886

CofC mailroom date: 03/06/12

Please respond to this request for a certificate of correction within 7 days.

FOR IFW FILES:

Please review the requested changes/corrections as shown in the **COCIN** document(s) in the IFW application image. No new matter should be introduced, nor should the scope or meaning of the claims be changed.

Please complete the response (see below) and forward the completed response to scanning using document code **COCX**.

FOR PAPER FILES:

Please review the requested changes/corrections as shown in the attached certificate of correction. Please complete this form (see below) and forward it with the file to:

Certificates of Correction Branch (CofC)
Randolph Square – 9D10-A
Palm Location 7580
You can fax the Directors/SPE response to 571-273-3421

Note: Should the PCT Filing date be changed

Yes

Lamonte Newsome

Certificates of Correction Branch

571-272-3421

Thank You For Your Assistance

The request for issuing the above-identified correction(s) is hereby:
Note your decision on the appropriate box.

SPE RESPONSE FOR CERTIFICATE OF CORRECTION

☒ **Approved** — **All** changes apply.

☐ **Approved in Part** — Specify below which changes **do not** apply.

☐ **Denied** — State the reasons for denial below.

Comments: OK TO ENTER

SHEENI PADMANABHAN
SUPERVISORY PATENT EXAMINER
SPE

1627
Art Unit

UNITED STATES PATENT AND TRADEMARK OFFICE

Commissioner for Patents
United States Patent and Trademark Office
P.O. Box 1450
Alexandria, VA 22313-1450
www.uspto.gov

MAILED

JUN 21 2011

PCT LEGAL ADMINISTRATION

PHILIP S. JOHNSON
JOHNSON & JOHNSON
ONE JOHNSON & JOHNSON PLAZA
NEW BRUNSWICK NJ 08933-7003

In re Application of	:	
JENNINGS et al.	:	
Application No.: 11/910,539	:	DECISION
PCT No.: PCT/GB2006/001030	:	
Int. Filing Date: 21 March 2006	:	
Priority Date: 06 April 2005	:	
Attorney's Docket No.: CCS5021USPCT	:	
For: INJECTION DEVICE	:	

This decision is in response to applicants' petition under 37 CFR 1.137(b) filed 10 March 2011 in the United States Patent and Trademark Office (USPTO).

BACKGROUND

On 21 March 2006, applicants filed international application PCT/GB2006/001030, which designated the U.S. and claimed a priority date of 06 April 2005. The thirty-month period for paying the basic national fee in the United States expired at midnight on 09 October 2007 (06 October 2007 being a Saturday and 08 October 2007 being a Federal holiday).

On 03 October 2007, applicants filed a submission for entry into the national stage in the United States which was accompanied by, *inter alia*, the U.S. Basic National Fee.

On 01 April 2008, the USPTO issued a NOTIFICATION OF MISSING REQUIREMENTS UNDER 35 U.S.C. 371 (Form PCT/DO/EO/905) indicating, *inter alia*, that an oath or declaration of inventors in compliance with 37 CFR 1.497(a)-(b) was required.

On 15 May 2008, applicants filed, *inter alia*, a declaration of inventors.

On 25 August 2008, the USPTO issued a NOTIFICATION OF DEFECTIVE RESPONSE (Form PCT/DO/EO/916) indicating, *inter alia*, that the declaration of inventor filed 15 May 2008 was defective.

On 07 February 2011, the USPTO issued a NOTIFICATION OF ABANDONMENT (Form PCT/DO/EO/909) indicating that the application was abandoned as to the United States of

America for failure to respond to the NOTIFICATION OF MISSING REQUIREMENTS mailed 25 August 2008 within the time period set therein.

On 10 March 2011, applicants filed a submission including, *inter alia*, a petition under 37 CFR 1.137(b) and a new declaration of inventors.

DISCUSSION

A petition to revive the present application under 37 CFR 1.137(b) must include:

(1) The required reply;
(2) The petition fee;
(3) A statement that the entire delay in filing the required reply from the due date for the reply until the filing of a grantable petition was unintentional.

Item (1) has been satisfied.

As to item (2), applicant submitted the petition fee on 10 March 2011

As to item (3), the required statement has been provided.

Declaration of Inventors

The declaration of the inventors filed 10 March 2011 is in compliance with 37 CFR 1.497(a)-(b).

CONCLUSION

The petition under 37 CFR 1.137(b) is **GRANTED** for the reasons set forth above.

This application is being forwarded to the National Stage Processing Branch of the Office of PCT Operations to continue national stage processing of the application.

/Daniel Stemmer/

Daniel Stemmer
Legal Examiner
PCT Legal Affairs
Office of Patent Cooperation Treaty
Legal Administration
Telephone: (571) 272-3301

UNITED STATES PATENT AND TRADEMARK OFFICE

Commissioner for Patents
United States Patent and Trademark Office
P.O. Box 1450
Alexandria, VA 22313-1450
www.uspto.gov

KING & SCHICKLI, PLLC
247 NORTH BROADWAY
LEXINGTON KY 40507

MAILED

JUN 20 2011

OFFICE OF PETITIONS

In re Application of :
Eckard Glaser et al. :
Application No. 11/910,562 : DECISION ON PETITION
Filed: February 17, 2009 :
Attorney Docket No. **1330-016** :

This is a decision on the petition, filed May 16, 2011, which is being treated as a petition under 37 CFR 1.181 (no fee) requesting withdrawal of the holding of abandonment in the above-identified application.

The petition is **GRANTED**.

This application was held abandoned for failure to reply to the non-final Office action mailed October 12, 2010, which set a three (3) month statutory period for reply.

Petitioner asserts that the Notice dated October 12, 2010, was not received.

A review of the written record indicates no irregularity in the mailing of the non-final Office action of October 12, 2010, in the absence of any irregularity, there is a strong presumption that the non-final Office action was properly mailed to the practitioner at the address of record.

Petitioner has made a sufficient showing that the Notice mailed on October 12, 2010, was not received. Therefore, in view of the above, the Notice of Abandonment is hereby vacated and the holding of abandonment withdrawn.

Telephone inquiries concerning this decision should be directed to JoAnne Burke at (571) 272-4584.

This application is being referred to the Technology Center Art Unit 2857 for **re-mailing** the non-final Office action of October 12, 2010, with the period for reply running from the mailing date thereof.

/ Ramesh Krishnamurthy/
Ramesh Krishnamurthy
Petitions Examiner
Office of Petitions

UNITED STATES PATENT AND TRADEMARK OFFICE

Commissioner for Patents
United States Patent and Trademark Office
P.O. Box 1450
Alexandria, VA 22313-1450
www.uspto.gov

04743
MARSHALL, GERSTEIN & BORUN LLP
233 S. Wacker Drive, Suite 6300
Sears Tower
Chicago, IL 60606

MAILED

NOV 08 2010

PCT LEGAL ADMINISTRATION

In re Application of
O'CONNELL *et al*
Application No.: 11/910,595
PCT No.: PCT/US2006/012453
Int. Filing Date: 04 April 2006
Priority Date: 04 April 2005
Attorney Docket No.: 29375/40224B
For: REMOVABLE FILTER HEAD

DECISION

This is a decision on the petition for revival under 37 CFR 1.137(a) filed on 06 September 2010.

BACKGROUND

On 03 October 2007, applicants filed papers and fees to enter the U.S. national stage under 35 U.S.C. 371 of PCT/US2006/012453.

On 09 April 2008, a Notification of Missing Requirements Under 35 U.S.C. 371 in the United States Designated/Elected Office (DO/EO/US) (Form PCT/DO/EO/905) was mailed indicating that a declaration in compliance with 37 CFR 1.497(a) and (b) and a surcharge fee was required.

On 09 October 2008, applicants filed a declaration signed by a joint inventor and the executor of a deceased joint inventor. Applicants included a four-month extension fee and surcharge fee.

On 24 June 2009, a decision dismissing applicants' petition under 37 CFR 1.42 was mailed. Applicants were given two months to respond with extensions of time available under 37 CFR 1.136(a).

On 24 November 2009, applicants filed a "Response to Decision" which included a Supplemental Application Data Sheet and a three-month extension fee.

On 22 January 2010, a decision dismissing applicants' renewed petition under 37 CFR 1.42 was mailed. Applicants were given two months to respond with extensions of time available under 37 CFR 1.136(a).

On 25 August 2010, the DO/EO/US mailed a Notification of Abandonment (Form PCT/DO/EO/909) for failing to respond to the Notification of Missing Requirements (Form PCT/DO/EO/905)(*sic*) mailed 22 January 2010.

On 06 September 2010, applicants filed the subject petition to revive under 37 CFR 1.137(a) which was accompanied by, *inter alia*, a $540.00 petition fee and an executed declaration.

DISCUSSION

Applicants request that the subject application be revived pursuant to 37 CFR 1.137(a). A petition to revive an abandoned application pursuant to 37 CFR 1.137(a) must be accompanied by:

(1) the required reply;
(2) a showing to the satisfaction of the Director that the entire delay in filing the required reply from the due date for the reply until the filing of a grantable petition pursuant to 37 CFR 1.137(a) was unavoidable;
(3) any terminal disclaimer required pursuant to 37 CFR 1.137(c); and
(4) the petition fee.

Items (1), (3) and (4) of 37 CFR 1.137(a) are complete in the subject petition.

The required reply (of the decision dated 22 January 2010) was to "provide an oath or declaration in compliance with 37 CFR 1.497(a) and (b)." Applicants submitted a declaration executed by joint inventor, Paul T. O'CONNELL and by Armelle Nadal as the legal representative of a deceased joint inventor, Guy NADAL. A review of the declaration shows that the required information for the joint inventors (37 CFR 1.497(a)(3)) and the legal representative (37 CFR 1.497(b)(2)) are recorded on the declaration. This declaration is in compliance with 37 CFR 1.497(a) and (b), and as such, is considered the proper reply. The petition fee of $540.00 has been paid. A terminal disclaimer is not required.

With regards to item (2) of 37 CFR 1.137(a), applicants point out that the Form PCT/DO/EO/909 incorrectly stated that the subject application became abandoned for failing to respond to a Notification of Missing Requirements (Form PCT/DO/EO/905) mailed 22 January 2010. The document mailed 22 January 2010 was a Decision on Petition, not a Notification of Missing Requirements.

Applicants are correct. The Form PCT/DO/EO/909 erroneously listed the Office communication mailed 22 January 2010 as a Notification of Missing Requirements when it was, in fact, a Decision on Petition. Regardless, the subject application is still abandoned for failing to timely reply to the Decision on Petition.

Applicants claim that the "Decision on Petition does not specify what, if any response was required nor does it specify when, if ever, any such response was due." Applicants argue that they "failed to receive fair and adequate notification of required action to maintain the pendency of this application."

This argument is without merit.

A review of the Decision on Petition mailed 22 January 2010 shows that the first page of the decision states, in relevant part:

> In the renewed response, applicants claim that a new declaration was submitted along with a Supplemental Application Data Sheet. However, the new declaration is not located in the file.
>
> It appears that applicants inadvertently failed to submit the declaration with the subject response as intended.

Moreover, the second page of the decision states:

> Applicants are required to provide an oath or declaration in compliance with 37 CFR 1.497(a) and (b) within a time limit of **TWO (2) MONTHS** from the mail date of this decision. Extension of time may be granted under 37 CFR 1.136(a).

Therefore, applicants were provided clear direction of the response required and when such a response was due. The decision noted that a declaration was missing and one in compliance with 37 CFR 1.497(a) and (b) was required. The decision also provided a time period for applicants to provide the required declaration.

Applicants have not made the requisite showing that the entire delay in filing the required reply from the due date for the reply until the filing of a grantable petition pursuant to 37 CFR 1.137(a) was unavoidable. For this reason, item (2) of 37 CFR 1.137(a) is not satisfied.

All the requirements of 37 CFR 1.137(a) are not complete.

CONCLUSION

Applicants' petition for revival pursuant to 37 CFR 1.137(a) is **DISMISSED** without prejudice.

The above-captioned application remains **ABANDONED**.

This decision does not preclude applicants from obtaining relief pursuant to 37 CFR 1.137(b) on the basis of unintentional delay. Any renewed petition under 37 CFR 1.137(a), or a petition to revive under 37 CFR 1.137(b) must be filed within **TWO (2)**

MONTHS from the mail date of this decision.

Failure to promptly respond may be considered an intentional delay.

Any further correspondence with respect to this matter may be filed electronically via EFS-Web selecting the document description "Petition for review and processing by the PCT Legal Office" or by mail addressed to Mail Stop PCT, Commissioner for Patents, Office of PCT Legal Administration, P.O. Box 1450, Alexandria, Virginia 22313-1450, with the contents of the letter marked to the attention of the Office of PCT Legal Administration.

James Thomson

James Thomson
Attorney Advisor
Office of PCT Legal Administration

Tel.: (571) 272-3302

UNITED STATES PATENT AND TRADEMARK OFFICE

Commissioner for Patents
United States Patent and Trademark Office
P.O. Box 1450
Alexandria, VA 22313-1450
www.uspto.gov

86860
Anthony G. Sitko PLC
P.O. Box 315
Harbor Springs, MI 49740

MAILED

JAN 13 2011

PCT LEGAL ADMINISTRATION

In re Application of
O'CONNELL *et al*
Application No.: 11/910,595
PCT No.: PCT/US2006/012453
Int. Filing Date: 04 April 2006
Priority Date: 04 April 2005
Attorney Docket No.: 29375/40224B
For: REMOVABLE FILTER HEAD

DECISION

Applicants' petition to revive under 37 CFR 1.137(b) filed on 17 November 2010 is hereby **GRANTED** as follows:

The subject petition is considered an appropriate response to the decision mailed 08 November 2010. The petition fee has been paid. Applicants made the required statement pursuant to 37 CFR 1.137(b)(3). A terminal disclaimer is not required. Accordingly, all requirements under 37 CFR 1.137(b) have been satisfied.

A declaration in compliance with 37 CFR 1.497(a) and (b) was provided on 06 September 2010.

A change of correspondence address was filed with the subject petition. The correspondence address has been changed.

This application is being forwarded to the United States Designated/Elected Office for further processing.

James Thomson
Attorney Advisor
Office of PCT Legal Administration

Tel.: (571) 272-3302

UNITED STATES PATENT AND TRADEMARK OFFICE

Commissioner for Patents
United States Patent and Trademark Office
P.O. Box 1450
Alexandria, VA 22313-1450
www.uspto.gov

PHILIPS INTELLECTUAL PROPERTY & STANDARDS
P.O. BOX 3001
BRIARCLIFF MANOR, NY 10510

MAILED

FEB 23 2012

OFFICE OF PETITIONS

In re Application of
Chee Kang Thong, et al.
Application No. 11/910,619
Filed: October 4, 2007
Attorney Docket No: 2005P00563WOUS

ON PETITION

This is a decision on the petition, filed January 17, 2012, to revive the above-identified application under the unintentional provisions of 37 CFR 1.137(b).

The petition is **GRANTED**.

This application became abandoned for failure to timely pay the issue and publication fees on or before December 29, 2011. A Notice of Abandonment was mailed on January 17, 2012. On January 12, 2012, the present petition was filed.

The petition satisfies the requirements of 37 CFR 1.137(b) in that petitioner has supplied (1) the reply in the form of payment of the issue fee of $1,740 and the publication fee of $300, (2) the petition fee of $1,860; and (3) an adequate statement of unintentional delay.

The application is being referred to the Office of Data Management to be processed into a patent.

Telephone inquires related to this decision should be directed to the undersigned at (571) 272-3204. Telephone inquiries related to processing as a patent should be directed to (571) 272-4200.

/SDB/

Sherry D. Brinkley
Petitions Examiner
Office of Petitions

UNITED STATES PATENT AND TRADEMARK OFFICE

Commissioner for Patents
United States Patent and Trademark Office
P.O. Box 1450
Alexandria, VA 22313-1450
www.uspto.gov

MAILED

SEP 15 2011

PCT LEGAL ADMINISTRATION

MICHAEL BEST & FRIEDRICH LLP
TWO PRUDENTIAL PLAZA
180 NORTH STETSON AVENUE, SUITE 2000
CHICAGO, IL 60601

In re Application of: Stoessel et al.	:	
U.S. Application No: 11 /910,697	:	
PCT Application No.: PCT/EP2006/002983	:	
International Filing Date: 31 March 2006	:	DECISION ON PETITION
Priority Date: 08 April 2005	:	UNDER
Attorney's Docket No.: 41587.0163US	:	37 CFR 1.137(b)
For: DEVICE AND METHOD FOR	:	
REGULATING A LATERAL PART OF	:	
A SEAT	:	

This decision is in response to applicants' "Petition for Revival of an International Application for Patent Designating the U.S. Abandoned Unintentionally under 37 CFR 1.137(b)" filed 02 September 2011.

BACKGROUND

On 31 March 2006, applicants filed international application PCT/EP2006/002983, which claimed priority of an earlier German application filed 08 April 2005. A copy of the international application was communicated to the USPTO from the International Bureau on 12 October 2006. The thirty-month period for paying the basic national fee in the United States expired on 08 October 2007.

On 04 October 2007, applicant filed national stage papers in the United States Designated/Elected Office (DO/EO/US). The submission was accompanied by, *inter alia*, the basic national fee required by 35 U.S.C. 371(c)(1).

On 21 May 2010, the DO/EO/US mailed a Notification of Missing Requirements under 35 U.S.C. 371 (Form PCT/DO/905), which indicated that an oath or declaration in compliance with 37 CFR 1.497(a) and (b) must be filed.

On 22 July 2010, the present application became abandoned as to the United States for failure to timely respond to the Notification of Missing Requirements.

On 02 September 2011, applicant filed the present petition under 37 CFR 1.137(b).

DISCUSSION

Under 37 CFR 1.137(b), a petition requesting that an application be revived on the grounds of unintentional abandonment must be accompanied by: (1) the required reply unless previously filed; (2) the petition fee as set forth in § 1.17(m); (3) a statement that the entire delay in filing the required reply from the due date for the reply until the filing of a grantable petition was unintentional; and (4) a terminal disclaimer if the application was filed before 08 June 1995.

With regard to item (1), applicant has provided the required reply by submitting a declaration in compliance with 37 CFR 1.497(a) and (b) and a surcharge fee for filing oath or declaration after commencement of the national stage.

With regard to item (2), applicant has provided the required petition fee set forth in 37 CFR 1.17(m).

With regard to item (3), applicant has provided the proper statement under 37 CFR 1.137(b)(3).

With regard to item (4), because the international application was filed after 08 June 1995, no terminal disclaimer is required.

CONCLUSION

For the reason above, the petition under 37 CFR 1.137(b) is **GRANTED**.

The application has an International Filing Date under 35 U.S.C. 363 of 31 March 2006, and a date under 35 USC 371(c)(1), (c)(2), and (c)(4) of 02 September 2011.

The application is being forwarded to the United States Designated/Elected Office (DO/EO/US) for further processing in accordance with this decision.

Seungsook Ham
Office of PCT Legal Administration
United States Patent and Trademark Office

Boris Milef
PCT Legal Examiner
Office of PCT Legal Administration
Telephone: (571) 272-3288

UNITED STATES PATENT AND TRADEMARK OFFICE

Commissioner for Patents
United States Patent and Trademark Office
P.O. Box 1450
Alexandria, VA 22313-1450
www.uspto.gov

Paper No.

THADDIUS J. CARVIS
102 NORTH KING STREET
LEESBURG VA 20176

MAILED

NOV 17 2010

OFFICE OF PETITIONS

In re Application of	:	
Balemi et al.	:	DECISION ON
Application No. 11/910,797	:	PETITION
Filed: December 18, 2007	:	
Atty Docket No.BELIMO P1019 US	:	

This is a decision on the PETITION FOR REVIVAL OF AN APPLICATION FOR PATENT ABANDONED UNINTENTIONALLY UNDER 37 CFR 1.137(b), filed September 21, 2010.

The petition is **GRANTED**.

The above-identified application became abandoned for failure to submit drawings within three months of the mailing date, May 27, 2010, of the Notice of Allowability. This Office action set a three-month nonextendable statutory period for reply. No drawings having been received, the above-identified application became abandoned on August 28, 2010. A courtesy Notice of Abandonment was mailed on September 10, 2010.

The petition included the required reply[1] in the form of submission of drawings; payment of the petition fee set forth in 37 CFR § 1.17(m); and the required statement of unintentional delay. No terminal disclaimer is required.

The Office of Patent Publication has been advised of this decision. The application is, thereby, forwarded for processing into a patent.

[1] The Issue Fee and Fee were timely paid on July 16, 2010.

Telephone inquiries related to this decision should be directed to the undersigned at (571) 272-3219.

Nancy Johnson
Senior Petitions Attorney
Office of Petitions

SPE RESPONSE FOR CERTIFICATE OF CORRECTION

Paper No.: _____

DATE : 05/9/11

TO SPE OF : ART UNIT 3634

SUBJECT : Request for Certificate of Correction for Appl. No 11/910,804 7891399B2

Please respond to this request for a certificate of correction within 7 days.

FOR IFW FILES:

Please review the requested changes/corrections as shown in the **COCIN** document(s) in the IFW application image. No new matter should be introduced, nor should the scope or meaning of the claims be changed.

Please complete the response (see below) and forward the completed response to scanning using document code **COCX**.

FOR PAPER FILES:

Please review the requested changes/corrections as shown in the attached certificate of correction. Please complete this form (see below) and forward it with the file to:

Certificates of Correction Branch (CofC)

Should the change(s) Be made?

RoChaun Johnson
Certificates of Correction Branch
571 272-0470

Thank You For Your Assistance

The request for issuing the above-identified correction(s) is hereby:
Note your decision on the appropriate box.

- • **Approved** — **All** changes apply.
- ☐ **Approved in Part** — Specify below which changes **do not** apply.
- ☐ **Denied** — State the reasons for denial below.

Comments: _____

/Katherine w mitchell/ 3634

SPE **Art Unit**

UNITED STATES PATENT AND TRADEMARK OFFICE

Commissioner for Patents
United States Patent and Trademark Office
P.O. Box 1450
Alexandria, VA 22313-1450
www.uspto.gov

Decision Date March 26, 2012
In re Application of Bahman Taheri
Application No. 11910875
Filed: 19-Nov-2007

DECISION ON PETITION
UNDER CFR 1.137(b)

Attorney Docket No. 15872.050

This is an electronic decision on the petition under 37 CFR 1.137(b), March 26, 2012 , to revive the above-identified application.

The petition is **GRANTED**.

The above-identified application became abandoned for failure to reply in a timely manner to the outstanding Office communication. The date of abandonment is the day after the last day of the period set for reply in the Office action plus any applicable extensions of time properly requested.

The electronic petition satisfies the conditions for revival pursuant to the provisions of 37 CFR 1.137(b) in that (1) the reply in the form of a response; (2) the petition fee as set forth in 37 CFR 1.17 (m); and (3) the required statement of unintentional delay have been received. Accordingly, the response is accepted as having been unintentionally delayed.

The statement of unintentional delay is being treated as having been made as the result of a reasonable inquiry into the facts and circumstances of such delay and by a person having firsthand or direct knowledge of the facts and circumstances of the delay at issue. See 37 CFR 10.18(b) and Changes to Patent Practice and Procedure; Final Rule Notice, 62 Fed. Reg.53131, 53178 (October 10, 1997), 1203 Off. Gaz. Pat. Office 63, 103 (October 21, 1997). In the event that such an inquiry has not been made, petitioner must make such an inquiry. If such inquiry results in the discovery that it is not correct that the entire delay in filing the required reply from the due date for the reply until the filing of a grantable petition pursuant to 37 CFR 1.137(b) was unintentional, petitioner must notify the Office.

Telephone inquiries concerning this decision should be directed to the Patent Electronic Business Center (EBC) at 866-217-9197.

This application file is being directed to the Technology Center.

Office of Petitions

Doc Code: PET.AUTO Document Description: Petition automatically granted by EFS-Web	PTO/SB/64 U.S. Patent and Trademark Office Department of Commerce

Electronic Petition Request	**PETITION FOR REVIVAL OF AN APPLICATION FOR PATENT ABANDONED UNINTENTIONALLY UNDER 37 CFR 1.137(b)**
Application Number	11910875
Filing Date	19-Nov-2007
First Named Inventor	Bahman Taheri
Attorney Docket Number	15872.050
Title	Automatic Dimming Liquid Crystal Mirror System

The above-identified application became abandoned for failure to file a timely and proper reply to a notice or action by the United States Patent and Trademark Office. The date of abandonment is the day after the expiration date of the period set for reply in the office notice or action plus any extensions of time actually obtained.

APPLICANT HEREBY PETITIONS FOR REVIVAL OF THIS APPLICATION

NOTE: A grantable petition requires the following items:
(1) Petition fee;
(2) Reply and/or issue fee;
(3) Terminal disclaimer with disclaimer fee - required for all utility and plant applications filed before June 8, 1995; and for all design applications; and
(4) Statement that the entire delay was unintentional

Petition Fee

- ○ Applicant claims SMALL ENTITY status. See 37 CFR 1.27.
- ○ Applicant is no longer claiming SMALL ENTITY status. See 37 CFR 1.27(g)(2).
- ◉ Applicant(s) status remains as SMALL ENTITY.
- ○ Applicant(s) status remains as other than SMALL ENTITY.

2. Reply and/or fee

- ○ I certify, in accordance with 37 CFR 1.4(d)(4) that the amendment and response have already been filed in the above-identified application on
- ◉ Amendment and response are attached

RCE request,submission, and fee.

- ○ I certify, in accordance with 37 CFR 1.4(d)(4) that the RCE Request, Submission, and Fee have already been filed in the above-identified application on
- ○ RCE Request, Submission, and Fee are attached

Notice of Appeal

○ I certify, in accordance with 37 CFR 1.4(d)(4) that the Notice of Appeal and Fee have already been filed in the above-identified application on

○ Notice of Appeal and Fee are attached

3. Terminal Disclaimer is not required, since the Electronic Petition format is not support for Design applications and applications filed before June 8, 1995. Please file using regular petition format for review by the Office of Petitions.

☒ STATEMENT: The entire delay in filing the required reply from the due date for the required reply until the filing of a grantable petition under 37 CFR 1.137(b) was unintentional.

THIS PORTION MUST BE COMPLETED BY THE SIGNATORY OR SIGNATORIES

I certify, in accordance with 37 CFR 1.4(d)(4) that I am:

○ An attorney or agent registered to practice before the Patent and Trademark Office who has been given power of attorney in this application.

◉ An attorney or agent registered to practice before the Patent and Trademark Office, acting in a representative capacity.

○ A sole inventor

○ A joint inventor; I certify that I am authorized to sign this submission on behalf of all of the inventors

○ A joint inventor; all of whom are signing this e-petition

○ The assignee of record of the entire interest that has properly made itself of record pursuant to 37 CFR 3.71

Signature	/Andrew B. Morton/
Name	Andrew B. Morton
Registration Number	37400

UNITED STATES PATENT AND TRADEMARK OFFICE

Commissioner for Patents
United States Patent and Trademark Office
P.O. Box 1450
Alexandria, VA 22313-1450
www.uspto.gov

MAILED

NOV 02 2010

PCT LEGAL ADMINISTRATION

DAVIS WRIGHT TREMAINE, LLP/Seattle
1201 Third Avenue, Suite 2200
SEATTLE WA 98101-3045

In re Application of	:	
BALLHAUSE, et al.	:	DECISION ON PETITION
Application No.: 11/910,887	:	
PCT No.: PCT/US2006/014667	:	UNDER 37 CFR 1.137(b)
Int. Filing Date: 17 April 2006	:	
Priority Date: 15 April 2005	:	
Atty. Docket No.: 47675-233	:	
For: A METHOD FOR PROVIDING DNA	:	
FRAGMENTS DERIVED FROM A	:	
REMOTE SAMPLE	:	

The petition to revive under 37 CFR 1.137(b) filed 14 July 2010 in the above-captioned application is hereby **GRANTED** as follows:

Applicant's statement that "the entire delay in filing the required reply from the due date for the required reply until the filing of a grantable petition under 37 CFR 1.137(b) was unintentional" and the prompt filing of the petition satisfies the requirement of 37 CFR 1.137(b)(3).

A review of the application file reveals that applicant has currently provided a compliant raw sequence listing which has been entered by the Biotechnology Systems Branch of the Scientific and Technical Information Center (STIC). Therefore, the request to revive the application abandoned under 35 U.S.C. 371(d) is granted as to the National stage in the United States of America. Further, a review of the application file reveals that all of the requirements of 35 U.S.C. 371 for entry into the national stage in the United States have been satisfied.

The application has an international filing date of 17 April 2006 under 35 U.S.C. 363 and will be given a date of **21 November 2007** under 35 U.S.C. 371(c)(1), (c)(2) and (c)(4).

This application is being returned to the United States Designated/Elected Office (DO/EO/US) for treatment in accordance with this decision.

Derek A. Putonen
Attorney Advisor
Office of PCT Legal Administration
Tel: (571) 272-3294

UNITED STATES PATENT AND TRADEMARK OFFICE

Commissioner for Patents
United States Patent and Trademark Office
P.O. Box 1450
Alexandria, VA 22313-1450
www.uspto.gov
DIW Mar-11

EGBERT LAW OFFICES
412 MAIN STREET, 7TH FLOOR
HOUSTON TX 77002

MAILED
APR 04 2011
OFFICE OF PETITIONS

In re Application of	:	
Jacques Pernot	:	
Application Number: 11/910904	:	ON PETITION
Filing Date: 10/05/2007	:	
Attorney Docket Number: 2247-3	:	

This is a decision in response to the petition under 37 CFR 1.137(b) filed on February 15, 2011, to revive the above-identified application.

The petition is **GRANTED**.

This application became abandoned on June 30, 2010, for failure to properly reply to the non-final Office action mailed on March 29, 2010, which set a three (3) month shortened statutory period for reply. No extensions of the time for reply in accordance with 37 CFR 1.136(a) were obtained. Notice of Abandonment was mailed on November 17, 2010.

Receipt of the amendment filed on February 15, 2011, is acknowledged.

The application is referred to Technology Center Art Unit 3732 for further processing.

Telephone inquiries concerning this matter may be directed to the undersigned at (571) 272-3231.

D Wood

Douglas I. Wood
Senior Petitions Attorney
Office of Petitions

UNITED STATES PATENT AND TRADEMARK OFFICE

Commissioner for Patents
United States Patent and Trademark Office
P.O. Box 1450
Alexandria, VA 22313-1450
www.uspto.gov

MAILED
AUG 02 2010
OFFICE OF PETITIONS

NXP, B.V.
NXP INTELLECTUAL PROPERTY & LICENSING
M/S41-SJ
1109 MCKAY DRIVE
SAN JOSE CA 95131

In re Application of	:	
Kim Phan Le	:	
Application No. 11/910,972	:	DECISION ON PETITION
Filed: October 8, 2007	:	
Attorney Docket No. 00 0006 US1	:	

This is a decision on the petition under the unintentional provisions of 37 CFR 1.137(b), filed June 21, 2010, to revive the above-identified application.

The petition is **GRANTED**.

The application became abandoned for failure to reply in a timely manner to the final Office action mailed, October 28, 2009, which set a shortened statutory period for reply of three (3) months. No extensions of time under the provisions of 37 CFR 1.136(a) were obtained. Accordingly, the application became abandoned on January 29, 2010. A Notice of Abandonment was mailed on May 21, 2010.

The petition satisfies the requirements of 37 CFR 1.137(b) in that petitioner has supplied (1) the reply in the form of a RCE (Request for Continued Examination, with the required fee of $810, (2) the petition fee of $1,620, and (3) a proper statement of unintentional delay. Accordingly, the RCE is accepted as being unintentionally delayed.

It is not apparent whether the person signing the statement of unintentional delay was in a position to have firsthand or direct knowledge of the facts and circumstances of the delay at issue. Nevertheless, such statement is being treated as having been made as the result of a reasonable inquiry into the facts and circumstances of such delay. See 37 CFR 10.18(b) and Changes to Patent Practice and Procedure; Final Rule Notice, 62 Fed. Reg. 53131, 53178 (October 10, 1997), 1203 Off. Gaz. Pat. Office 63, 103 (October 21, 1997). In the event that such an inquiry has not been made, petitioner must make such an inquiry. If such inquiry results in the discovery that it is not correct that the entire delay in filing the required reply from the due

date for the reply until the filing of a grantable petition pursuant to 37 CFR 1.137(b) was unintentional, petitioner must notify the Office.

The application file does not indicate a change of address has been filed in this case, although the address given on the petition differs from the address of record. A change of address should be filed in this case in accordance with MPEP 601.03. A courtesy copy of this decision is being mailed to the address noted on the petition. However, until otherwise instructed, all future correspondence regarding this application will be mailed solely to the address of record.

Telephone inquiries concerning this decision should be directed to Kimberly Inabinet at (571) 272-4618.

This application is being referred to Technology Center AU 2856 for appropriate action by the Examiner in the normal course of business on the reply received June 21, 2010.

/Kimberly Inabinet/

Kimberly Inabinet
Petitions Examiner
Office of Petitions

cc: Mark A. Wilson
1811 Santa Rita Road, Suite 130
Pleasanton, CA 94566

UNITED STATES PATENT AND TRADEMARK OFFICE

Commissioner for Patents
United States Patent and Trademark Office
P.O. Box 1450
Alexandria, VA 22313-1450
www.uspto.gov

Paper No.

LADAS & PARRY LLP
224 SOUTH MICHIGAN AVENUE
SUITE 1600
CHICAGO IL 60604

MAILED
JAN 03 2011
OFFICE OF PETITIONS

In re Application of	:	
French	:	
Application No. 11/911,005	:	DECISION ON PETITION
Filed: January 16, 2008	:	PURSUANT TO
Attorney Docket No.: CU-6111	:	37 C.F.R. § 1.137(B)
RJS	:	
Title: MAGNETIC DRIVE	:	
APPARATUS	:	

This is a decision on the petition pursuant to 37 C.F.R. § 1.137(b), filed November 15, 2010, to revive the above-identified application.

This petition pursuant to 37 C.F.R. § 1.137(b) is **GRANTED.**

The above-identified application became abandoned for failure to reply in a timely manner to the non-final Office action, mailed May 12, 2010, which set a shortened statutory period for reply of three months. No response was received, and no extensions of time under the provisions of 37 C.F.R. § 1.136(a) were requested. Accordingly, the above-identified application became abandoned on August 13, 2010.

A grantable petition pursuant to 37 C.F.R. § 1.137(b) must be accompanied by:

(1) The reply required to the outstanding Office action or notice, unless previously filed;
(2) The petition fee as set forth in 37 C.F.R. § 1.17(m);
(3) A statement that the entire delay in filing the required reply from the due date for the reply until the filing of a grantable petition pursuant to this paragraph was unintentional. The

Commissioner may require additional information where there is a question whether the delay was unintentional, and;

(4) Any terminal disclaimer (and fee as set forth in 37 C.F.R. § 1.20(d)) required pursuant to paragraph (d) of this section.

With this petition, Petitioner has submitted an amendment, the petition fee, and the proper statement of unintentional delay.

As such, the first three requirements of Rule 1.137(b) have been met. The fourth requirement of Rule 1.137(b) is not applicable, as a terminal disclaimer is not required.[1]

The Technology Center will be notified of this decision, and jurisdiction over this application is transferred to the Technology Center, so that the application may receive further processing. The Technology Center's support staff will notify the Examiner of this decision, so that the amendment that was received on November 15, 2010 can be processed in due course. Petitioner may find it beneficial to view Private PAIR within a fortnight of the present decision to ensure that the revival has been acknowledged by the Technology Center in response to this decision. It is noted that all inquiries with regard to any failure of that change in status should be directed to the Technology Center where that change of status must be effected - **the Office of Petitions cannot effectuate a change of status.**

Telephone inquiries regarding *this decision* should be directed to the undersigned at (571) 272-3225.[2] All other inquiries concerning this application should be directed to the Technology Center.

/Paul Shanoski/
Paul Shanoski
Senior Attorney
Office of Petitions

---

1 See Rule 1.137(d).
2 Petitioner will note that all practice before the Office should be in writing, and the action of the Office will be based exclusively on the written record in the Office. See 37 C.F.R. § 1.2. As such, Petitioner is reminded that no telephone discussion may be controlling or considered authority for Petitioner's further action(s).

UNITED STATES PATENT and TRADEMARK OFFICE

0 4 AUG 2010

COMMISSIONER FOR PATENTS
UNITED STATES PATENT AND TRADEMARK OFFICE
P.O BOX 1450
ALEXANDRIA, VA 22313-1450
www.uspto.gov

EDWARD LANGER
c/o SHIBOLETH YISRAELI ROBERTS ZISMAN & CO.
1 PENN PLAZA-SUITE 2527
NEW YORK NY 10119

In re Application of	DECISION ON
Ben-Nun	
Application No. 11/911,111	
PCT No.: PCT/IL2006/000384	
Int. Filing Date: 27 March 2006	
Priority Date: 13 April 2005	PETITION UNDER
Attorney's Docket No.: 2246	
For: THERMAL CAPSULOTOMY TOOL AND SYSTEM	37 CFR 1.137 (b)

This decision is in response to applicant's' "PETITION FOR REVIAVAL OF AN APPLICATION FOR PATENT ABANDONED UNINTENTIONALLY UNDER 37 CFR 1.137(b)," filed on 03 January 2007.

BACKGROUND

In a decision from this Office on 29 March 2010, the petition filed on 09 November 2009 under 37 CFR 1.181 was dismissed as applicants did not provide a docket report to meet the requirements as stipulated under MPEP section 711.03.

On 31 May 2010, applicants filed the instant petition under 37 CFR 1.137(b), which was accompanied by the petition fee.

DISCUSSION

A grantable petition to revive an abandoned application under 37 CFR 1.137(b) must be accompanied by (1) the required reply, unless previously filed. In a nonprovisional application abandoned for failure to prosecute, the required reply may be met by the filing of a continuing application; (2) the petition fee as set forth in § 1.17(m); and (3) a statement that the entire delay in filing the required reply from the due date for the reply until the filing of a grantable petition pursuant to this paragraph was unintentional. The Commissioner may require additional information where there is a question whether the delay was unintentional; and (4) any terminal disclaimer (and fee as set forth in § 1.20 (d)) required pursuant to paragraph (c) of this section.

Petitioner has provided: (1) the proper reply by already submitting a properly executed declaration, (2) the petition fee set forth in §1.17(m) and (3) the proper statement under 137(b)(3). In this application, no terminal disclaimer is required.

Accordingly, the petition is deemed to satisfy requirements (1) - (4) under 37 CFR 1.137(b).

DECISION

The petition under 37 CFR 1.137(b) is **GRANTED**.

This application is being returned to the United States Designated/Elected Office (DO/EO/US) for continued processing.

Rafael Bacares
PCT Legal Examiner
PCT Legal Office
Telephone: (571) 272-3276
Facsimile : (571) 273-0459

UNITED STATES PATENT AND TRADEMARK OFFICE

Commissioner for Patents
United States Patent and Trademark Office
P.O. Box 1450
Alexandria, VA 22313-1450
www.uspto.gov

SCHWEGMAN, LUNDBERG & WOESSNER, PA
P.O. BOX 2938
MINNEAPOLIS MN 55402

MAILED

JAN 14 2011

OFFICE OF PETITIONS

In re Application of
Jerry L. O'Donnell, et al.
Application No. 11/911,141
Filed: October 10, 2007
Attorney Docket No. 001727.003US1

DECISION ON PETITION
TO WITHDRAW
FROM RECORD

This is a decision on the Request to Withdraw as attorney or agent of record under 37 C.F.R. § 1.36(b), filed November 29, 2010.

The request is **DISMISSED** as moot.

A review of the file record indicates that the power of attorney to Schwegman, Lundberg & Woessner, PA has been revoked by the assignee of the patent application on February 17, 2010. Accordingly, the request to withdraw under 37 C.F.R. § 1.36(b) is moot.

All future communications from the Office will continue to be directed to the below-listed address until otherwise notified by applicant.

Telephone inquires concerning this decision should be directed to undersigned at 571-272-1642. All other inquiries concerning the examination or status of this application should be directed to the Technology Center.

/AMW/
April M. Wise
Petitions Examiner
Office of Petitions

SPE RESPONSE FOR CERTIFICATE OF CORRECTION

Paper No.:20120103

DATE : January 5, 2012

TO SPE OF : ART UNIT 2111

SUBJECT : Request for Certificate of Correction on Patent No.: 8055826

A response is requested with respect to the accompanying request for a certificate of correction.

Please complete this form and return with file, within **7** days to:
Certificates of Correction Branch - PK 3-910
Palm location **7590** - Tel. No. 305-8201

With respect to the change(s) requested, correcting Office and/or Applicant's errors, should the patent read as shown in the certificate of correction? No new matter should be introduced, nor should the scope or meaning of the claims be changed.

Thank You For Your Assistance **Certificates of Correction Branch**

The request for issuing the above-identified correction(s) is hereby:
Note your decision on the appropriate box.

☒ **Approved** **All** changes apply.

☐ **Approved in Part** Specify below which changes **do not** apply.

☐ **Denied** State the reasons for denial below.

Comments:

Approved with corrections as follows: The proposed amendment to column 13 line 42 does not correctly reference the location to be amended because the limitations do not appear at the recited line. The appropriate location to be amended is at column 13 line 45 and the proposed correction is approved with the changed location.

SPE: /Mark Rinehart/ **Art Unit** 2111

UNITED STATES PATENT AND TRADEMARK OFFICE

Commissioner for Patents
United States Patent and Trademark Office
P.O. Box 1450
Alexandria, VA 22313-1450
www.uspto.gov

Decision Date : February 28, 2012

In re Application of :

Hiroichi Ishikawa

DECISION ON PETITION

UNDER CFR 1.313(c)(2)

Application No : 11911179

Filed : 05-Dec-2008

Attorney Docket No : 09792909-7105

This is an electronic decision on the petition under 37 CFR 1.313(c)(2), filed February 28, 2012 , to withdraw the above-identified application from issue after payment of the issue fee.

The petition is **GRANTED.**

The above-identified application is withdrawn from issue for consideration of a submission under 37 CFR 1.114 (request for continued examination). See 37 CFR 1.313(c)(2).

Petitioner is advised that the issue fee paid in this application cannot be refunded. If, however, this application is again allowed, petitioner may request that it be applied towards the issue fee required by the new Notice of Allowance.

Telephone inquiries concerning this decision should be directed to the Patent Electronic Business Center (EBC) at 866-217-9197.

This application file is being referred to Technology Center AU 2835 for processing of the request for continuing examination under 37 CFR 1.114 .

Office of Petitions

Doc Code: PET.AUTO Document Description: Petition automatically granted by EFS-Web	PTO/SB/140 U.S. Patent and Trademark Office Department of Commerce

Electronic Petition Request	**PETITION TO WITHDRAW AN APPLICATION FROM ISSUE AFTER PAYMENT OF THE ISSUE FEE UNDER 37 CFR 1.313(c)**
Application Number	11911179
Filing Date	05-Dec-2008
First Named Inventor	Hiroichi Ishikawa
Art Unit	2835
Examiner Name	INGRID WRIGHT
Attorney Docket Number	09792909-7105
Title	VIBRATING DEVICE, JET FLOW GENERATING DEVICE, ELECTRONIC DEVICE, AND MANUFACTURING METHOD OF VIBRATING DEVICE

An application may be withdrawn from issue for further action upon petition by the applicant. To request that the Office withdraw an application from issue, applicant must file a petition under this section including the fee set forth in § 1.17(h) and a showing of good and sufficient reasons why withdrawal of the application from issue is necessary.

APPLICANT HEREBY PETITIONS TO WITHDRAW THIS APPLICATION FROM ISSUE UNDER 37 CFR 1.313(c).

A grantable petition requires the following items:
(1) Petition fee; and
(2) One of the following reasons:
(a) Unpatentability of one or more claims, which must be accompanied by an unequivocal statement that one or more claims are unpatentable, an amendment to such claim or claims, and an explanation as to how the amendment causes such claim or claims to be patentable;
(b) Consideration of a request for continued examination in compliance with § 1.114 (for a utility or plant application only); or
(c) Express abandonment of the application. Such express abandonment may be in favor of a continuing application, but not a CPA under 37 CFR 1.53(d).

Petition Fee

☐ Applicant claims SMALL ENTITY status. See 37 CFR 1.27.

☐ Applicant is no longer claiming SMALL ENTITY status. See 37 CFR 1.27(g)(2).

☐ Applicant(s) status remains as SMALL ENTITY.

☒ Applicant(s) status remains as other than SMALL ENTITY

Reason for withdrawal from issue

○ One or more claims are unpatentable

◉ Consideration of a request for continued examination (RCE) (List of Required Documents and Fees)

○ Applicant hereby expressly abandons the instant application (any attorney/agent signing for this reason must have power of attorney pursuant to 37 CFR 1.32(b)).

RCE request,submission, and fee.

☐ I certify, in accordance with 37 CFR 1.4(d)(4) that : The RCE request ,submission, and fee have already been filed in the above-identified application on

☒ Are attached.

THIS PORTION MUST BE COMPLETED BY THE SIGNATORY OR SIGNATORIES

I certify, in accordance with 37 CFR 1.4(d)(4) that I am:

◉ An attorney or agent registered to practice before the Patent and Trademark Office who has been given power of attorney in this application.

○ An attorney or agent registered to practice before the Patent and Trademark Office, acting in a representative capacity.

○ A sole inventor

○ A joint inventor; I certify that I am authorized to sign this submission on behalf of all of the inventors

○ A joint inventor; all of whom are signing this e-petition

○ The assignee of record of the entire interest that has properly made itself of record pursuant to 37 CFR 3.71

Signature	/David R. Metzger/
Name	David R. Metzger
Registration Number	32919

UNITED STATES PATENT AND TRADEMARK OFFICE

Commissioner for Patents
United States Patent and Trademark Office
P.O. Box 1450
Alexandria, VA 22313-1450
www.uspto.gov

TROUTMAN SANDERS LLP
5200 BANK OF AMERICA PLAZA
600 PEACHTREE STREET, N.E.
SUITE 5200
ATLANTA GA 30308-2216

MAILED
JAN 03 2012
OFFICE OF PETITIONS

In re Application of
Hildebrandt, et al.
Application No.: 11/911,185
Filed: October 10, 2007
Attorney Docket No: **POLY31**

ON PETITION

This is in response to the petition under 37 CFR 1.137(b) filed December 6, 2011.

Any request for reconsideration of this decision must be submitted within TWO (2) MONTHS from the mail date of this decision. Extensions of time under 37 CFR 1.136(a) are permitted. The reconsideration request should include a cover letter entitled "Renewed Petition" under 37 CFR 1.137(b)."

This application became abandoned for failure to file an appeal brief after the mailing of the "Notice of Panel Decision from Pre-Appeal Brief Review" on June 1, 2011, which set a period for reply of one month from its mailing date or the balance of the two-month time period running from the receipt of the Notice of Appeal on April 26, 2011. A timely and proper response was not received, and the application became abandoned on July 2, 2011. A Notice of Abandonment was mailed on December 7, 2011.

Effective December 1, 1997, the provisions of 37 CFR 1.137(b) now provide that where the delay in reply was unintentional, a petition may be filed to revive an abandoned application or a lapsed patent pursuant to 37 CFR 1.137(b). A grantable petition pursuant to 37 CFR 1.137(b) must be accompanied by:

(1) the required reply, unless previously filed. In a non-provisional application abandoned for failure to prosecute, the required reply may be met by the filing of a continuing application. In an application or patent, abandoned or lapsed for failure to pay the issue fee, or any portion thereof, the required reply must be the payment of the issue fee or any outstanding balance thereof.

(2) the petition fee as set forth in 37 CFR 1.17(m);

(3) a statement that the entire delay in filing the required reply from the due date for the reply until the filing of a grantable petition pursuant to 37 CFR 1.137(b) was unintentional. The Commissioner may require additional information where there is a question whether the delay was unintentional; and

(4) any terminal disclaimer (and fee set forth in 37 CFR 1.20(d)) required pursuant to 37 CFR 1.137(c).

The instant petition does not satisfy the requirements of item (1) above.

The instant petition was accompanied by a Notice of Appeal and fee as the response required by 37 CFR 1.137(b). The Notice of Panel Decision from Pre-Appeal Brief Review states, however, that applicant is required to file an appeal brief in accordance with 37 CFR 41.37. The filing of another Notice of Appeal is not considered a proper response to the Notice of Panel Decision from Pre-Appeal Brief Review. The renewed petition is required to be accompanied by an appeal brief or other appropriate response to the Notice of Panel Decision from Pre-Appeal Brief Review.

Further correspondence with respect to this matter should be addressed as follows:

By mail:

Mail Stop Petitions
Commissioner for Patents
United States Patent and Trademark Office
Box 1450
Alexandria, VA 22313-1450

By facsimile: (571) 273-8300
Attn: Office of Petitions

Telephone inquiries concerning this decision may be directed to the undersigned at (571) 272-3222.

/Kenya A. McLaughlin/

Kenya A. McLaughlin
Petitions Attorney
Office of Petitions

UNITED STATES PATENT AND TRADEMARK OFFICE

Commissioner for Patents
United States Patent and Trademark Office
P.O. Box 1450
Alexandria, VA 22313-1450
www.uspto.gov

TROUTMAN SANDERS LLP
5200 BANK OF AMERICA PLAZA
600 PEACHTREE STREET, N.E.
SUITE 5200
ATLANTA GA 30308-2216

MAILED
MAR 13 2012
OFFICE OF PETITIONS

In re Application of
Hildebrandt, et al.
Application No.: 11/911,185
Filed: October 10, 2007
Attorney Docket No: **POLY31**

ON PETITION

This is a decision on the petition under 37 CFR 1.137(b), filed March 5, 2012, to revive the above-identified application.

The petition is **GRANTED**.

This application became abandoned for failure to file an appeal brief after the mailing of the "Notice of Panel Decision from Pre-Appeal Brief Review" on June 1, 2011, which set a period for reply of one month from its mailing date or the balance of the two-month time period running from the receipt of the Notice of Appeal on April 26, 2011. A timely and proper response was not received, and the application became abandoned on July 2, 2011. A Notice of Abandonment was mailed on December 7, 2011.

The appeal brief filed March 5, 2012, is noted.

The address cited on the petition differs from the address of the record. A courtesy copy of this decision is being mailed to the address cited on the petition. All future correspondence will be mailed to the address of record until appropriate written instructions to the contrary are received.

The application is being forwarded to Technology Center 2600, GAU 2629 for further processing.

Telephone inquiries concerning this decision should be directed to the undersigned at (571) 272-3222.

/Kenya A. McLaughlin/

Kenya A. McLaughlin
Petitions Attorney
Office of Petitions

UNITED STATES PATENT AND TRADEMARK OFFICE

Commissioner for Patents
United States Patent and Trademark Office
P.O. Box 1450
Alexandria, VA 22313-1450
www.uspto.gov

McDonnell Boehnen Hulbert & Berghoff LLP
300 S. Wacker Drive
32nd Floor
Chicago, IL 60606

MAILED
JUN 14 2011
PCT LEGAL ADMINISTRATION

In re Application of :
BAUSCH et al. :
Application No.: 11/911,222 :
PCT No.: PCT/EP2006/003421 :
Int. Filing Date: 13 April 2006 :
Priority Date: 13 April 2005 :
Attorney Docket No.: 07-943 :
For: GENE EXPRESSION PROFILES BEING PREDICTIVE FOR THE RESPONSE OF TUMORS TO PHARMACEUTICALLY EFFECTIVE COMPOUNDS :

DECISION ON PETITION
UNDER 37 CFR 1.137(b)

The petition to revive under 37 CFR 1.137(b) filed 11 April 2011 in the above-captioned application is hereby **GRANTED** as follows:

Applicant's statement that "the entire delay in filing the required reply from the due date for the reply until the filing of a grantable petition under 37 CFR 1.137(b) was unintentional" meets the requirements of 37 CFR 1.137(b)(3).

A review of the application file reveals that applicant has submitted the required reply (Computer Readable Form (CRF) for sequence listing) and the requirements of 37 CFR 1.137(b) have been satisfied. Therefore, the request to revive the application abandoned under 35 U.S.C. 371(d) is granted as to the National stage in the United States of America.

This application is being returned to the United States Designated/Elected Office for processing in accordance with this decision.

Anthony Smith
Attorney-Advisor
Office PCT Legal Administration
Tel.: 571-272-3298
Facsimile: 571-273-0459

SPE RESPONSE FOR CERTIFICATE OF CORRECTION

Paper No.: _____

DATE : 04-02-11

TO SPE OF : ART UNIT 3725

SUBJECT : Request for Certificate of Correction for Appl. No.: 11/911273 Patent No.: 7849667

CofC mailroom date: 03-23-11

Please respond to this request for a certificate of correction within 7 days.

FOR IFW FILES:

Please review the requested changes/corrections as shown in the **COCIN** document(s) in the IFW application image. No new matter should be introduced, nor should the scope or meaning of the claims be changed.

Please complete the response (see below) and forward the completed response to scanning using document code **COCX**.

FOR PAPER FILES:

Please review the requested changes/corrections as shown in the attached certificate of correction. Please complete this form (see below) and forward it with the file to:

Certificates of Correction Branch (CofC)
Randolph Square – 9D10-A
Palm Location 7580

Angela Green
Certificates of Correction Branch
(703) 756-1541

Thank You For Your Assistance

The request for issuing the above-identified correction(s) is hereby:
Note your decision on the appropriate box.

- [X] **Approved** — All changes apply.
- [ ] **Approved in Part** — Specify below which changes **do not** apply.
- [ ] **Denied** — State the reasons for denial below.

Comments: Please Enter Proposed request for certificate of correction.

SPE DAG Art Unit 3725

UNITED STATES PATENT AND TRADEMARK OFFICE

Commissioner for Patents
United States Patent and Trademark Office
P.O. Box 1450
Alexandria, VA 22313-1450
www.uspto.gov

FASTH LAW OFFICES (ROLF FASTH)
26 PINECREST PLAZA, SUITE 2
SOUTHERN PINES NC 28387-4301

MAILED
NOV 25 2011
OFFICE OF PETITIONS

In re Application of :
HOMMAN et al. :
Application No. 11/911,274 : DECISION ON PETITION
Filed: 10/11/2007 :
Attorney Docket No. 508.1143USN :

This is a decision on the petition under the unintentional provisions of 37 CFR 1.137(b), filed October 11, 2011, to revive the above-identified application.

The petition is **GRANTED**.

The application became abandoned for failure to reply in a timely manner to the non-final Office action, mailed February 17, 2011, which set a shortened statutory period for reply of three (3) months. No extensions of time under the provisions of 37 CFR 1.136(a) were obtained. Accordingly, the application became abandoned on May 18, 2011. A Notice of Abandonment was mailed on September 7, 2011.

The petition satisfies the requirements of 37 CFR 1.137(b) in that petitioner has supplied (1) the reply in the form of an amendment, (2) the petition fee, and (3) a proper statement of unintentional delay.

This application is being referred to Technology Center AU 2624 for appropriate action by the Examiner on the reply received on October 11, 2011.

Inquiries concerning this decision should be directed to the undersigned at (571) 272-3211.

C. T. Donnell

Christina Tartera Donnell
Senior Petitions Attorney
Office of Petitions

UNITED STATES PATENT AND TRADEMARK OFFICE

Commissioner for Patents
United States Patent and Trademark Office
P.O. Box 1450
Alexandria, VA 22313-1450
www.uspto.gov

SCHMEISER, OLSEN & WATTS
22 CENTURY HILL DRIVE
SUITE 302
LATHAM NY 12110

MAILED
MAR 28 2011
OFFICE OF PETITIONS

In re Application of	:	
John Orava	:	
Application No. 11/911,284	:	DECISION ON PETITION
Filed: October 11, 2007	:	
Attorney Docket No. ORAV-4893-NY	:	

This is a decision on the petition under the unintentional provisions of 37 CFR 1.137(b), filed January 10, 2011, to revive the above-identified application.

The petition is **GRANTED**.

The application became abandoned for failure to reply in a timely manner to the non-final Office action mailed May 11, 2009, which set a shortened statutory period for reply of three (3) months. No extensions of time under the provisions of 37 CFR 1.136(a) were obtained. Accordingly, the application became abandoned on August 12, 2009. A Notice of Abandonment was mailed on January 19, 2010.

The petition satisfies the requirements of 37 CFR 1.137(b) in that petitioner has supplied (1) the reply in the form of an amendment, (2) the petition fee of $810 and (3) a proper statement of unintentional delay. Accordingly, the amendment is accepted as being unintentionally delayed.

Telephone inquiries concerning this decision should be directed to Kimberly Inabinet at (571) 272-4618.

This application is being referred to Technology Center AU 3635 for appropriate action by the Examiner in the normal course of business on the reply received January 10, 2011.

/Kimberly Inabinet/

Kimberly Inabinet
Petitions Examiner
Office of Petitions

UNITED STATES PATENT AND TRADEMARK OFFICE

Commissioner for Patents
United States Patent and Trademark Office
P.O. Box 1450
Alexandria, VA 22313-1450
www.uspto.gov

FULBRIGHT & JAWORSKI L.L.P
2200 ROSS AVENUE
SUITE 2800
DALLAS TX 75201-2784

MAILED
MAR 23 2012
OFFICE OF PETITIONS

In re Application of	:	
Kerr et al.	:	DECISION ON PETITION
Application No. 11/911,343	:	TO WITHDRAW
Filed: September 22, 2009	:	FROM RECORD
Attorney Docket No. LA-7864-101/10715388	:	

This is a decision on the Request to Withdraw as attorney or agent of record under 37 C.F.R. § 1.36(b), filed March 9, 2012.

The request is **NOT APPROVED**.

The Office strongly encourages practitioner(s) requesting withdrawal from representation as practitioner of record in an application to review the record to determine whether he or she is, in fact, of record and how he or she was made of record. For example, the practitioner(s) should determine whether he or she was appointed by naming each practitioner individually or through the use of a Customer Number. If the practitioner(s) was appointed by a specific designation, then the Request should ask that each specified practitioner be withdrawn and should list each practitioner(s) in the Request.

In the instant application, the practitioners were not appointed via Customer Number provided on the request form. Customer Number 29053 was used to change the correspondence address on February 18, 2011, but the Customer Number used to the appoint the power of attorney did not change. Therefore, a request to withdraw that does not provide the Customer Number initially used to give power of attorney cannot be approved.

Further, the Office will only accept correspondence address changes to the most current address information provided for the assignee of the entire interest *who properly became of record under 37 CFR 3.71*, or, if no assignee of the entire interest has properly been made of record, the most current address information provided for the first named inventor. 37 CFR 3.71(c) states:

> *An assignee becomes of record either in a national patent application or a reexamination proceeding by filing a statement in compliance with § 3.73(b) that is signed by a party who is authorized to act on behalf of the assignee.*

As there is no Statement under 37 CFR 3.73(b) in the instant application, the request cannot be approved. All future communications from the Office will be directed to above-listed address until otherwise properly notified by the applicant or a proper change of correspondence address have been submitted.

Telephone inquiries concerning this decision should be directed to the undersigned at (571) 272-3206. All other inquires concerning either the examination or status of the application should be directed to the Technology Center.

/Liana Walsh/
Liana Walsh
Petitions Examiner
Office of Petitions

UNITED STATES PATENT AND TRADEMARK OFFICE

Commissioner for Patents
United States Patent and Trademark Office
P.O. Box 1450
Alexandria, VA 22313-1450
www.uspto.gov

MAILED
NOV 17 2011
OFFICE OF PETITIONS

Paper No.

KNOBBE MARTENS OLSON & BEAR LLP
2040 MAIN STREET
FOURTEENTH FLOOR
IRVINE CA 92614

In re Application of Granier Application No. 11/911,375 Filed: October 12, 2007 Patent No. 7,998,754 Issued: August 16, 2011 Attorney Docket No. VANM332.001 APC Title: IN VITRO METHOD FOR THE SIMULTANEOUS DETECTION AND IDENTIFICATION OF ANTIBIOTICS OF DIFFERENT CLASSES AND CORRESPONDING DIAGNOSTIC KIT	LETTER REGARDING PATENT TERM ADJUSTMENT

This is a decision on the "REQUEST FOR RECONSIDERATION OF THE PATENT TERM ADJUSTMENT," filed October 17, 2011, requesting that the patent term adjustment indicated on the above-identified patent be corrected to indicate that the term of the above-identified patent is extended or adjusted by five hundred and eighty-six (586) days.

The petition to correct the patent term adjustment indicated on the above-identified patent to indicate that the term of the above-identified patent is extended or adjusted by five hundred and eighty-four (584) days is **GRANTED to the extent indicated herein.**

The record supports a conclusion that any patent issuing from this patent is not subject to a terminal disclaimer.

This patent issued on August 16, 2011, with a patent term adjustment of 581 days.

The Office has determined that the patent term adjustment for the above-identified patent is **584 days**.

The Office agrees that the fulfillment date is October 12, 2007 and not October 14, 2007. The restriction requirement that was mailed on January 14, 2010 was mailed 398 days after the fulfillment date, and this warrants an adjustment of 398 days, not 396 days, pursuant to 37 C.F.R. § 1.703(a)(1).

Regarding B-delay, Patentee has requested that B-delay be calculated using the three-year anniversary of the filing date of this application, October 12, 2010. However, 37 C.F.R. § 1.703(b) indicates "[t]he period of adjustment under § 1.702(b) is the number of days, if any, in the period beginning on the day after the date that is three years after the date on which the application was filed under 35 U.S.C. 111(a) or the national stage commenced under 35 U.S.C. 371(b) (emphasis added) or (f) in an international application and ending on the date a patent was issued."

As such, due to the fact that this application was filed pursuant to 35 U.S.C. § 371, it is the three-year anniversary of the commencement date, and not the filing date, that is used when calculating the period of B-delay. The commencement date is the thirty-month anniversary of the April 14, 2005 priority date, which is October 14, 2007. This patent issued three years and 306 days after October 14, 2010.

The Office has determined that no period of examination delay overlaps with the over three-year period.

It follows that the B-delay totals 306 days (not 308 days as asserted by Patentee or 305 days as initially calculated by the Office).

As such, the patent term adjustment is increased by 584 (398 days of examination delay plus 306 "B-delay" minus 120 days of Applicant delay) days, not 586 days.

The Office acknowledges submission of the $200.00 fee set forth in 37 C.F.R. § 1.18(e). No additional fees are required.

The Office will *sua sponte* issue a certificate of correction. Pursuant to 37 C.F.R. § 1.322, the Office will not issue a certificate of correction without first providing assignee or

Patentee an opportunity to be heard. Accordingly, Patentee is given **one (1) month or thirty (30) days**, whichever is longer, from the mail date of this decision to respond. No extensions of time will be granted under 37 C.F.R. § 1.136.

This patent is being forwarded to the Certificates of Correction Branch for issuance of a certificate of correction. The Office will issue a certificate of correction indicating that the term of the above-identified patent is extended or adjusted by **five hundred and eighty-four (584) days**.

Telephone inquiries specific to this matter should be directed to the undersigned at (571) 272-3225.

/Paul Shanoski/
Paul Shanoski
Senior Attorney
Office of Petitions

Enclosure: Copy of DRAFT Certificate of Correction

UNITED STATES PATENT AND TRADEMARK OFFICE

CERTIFICATE OF CORRECTION

PATENT : 7,998,754 B2

DATED : **Aug. 16, 2011** **DRAFT**

INVENTOR(S) : Granier

It is certified that error appears in the above-identified patent and that said Letters Patent is hereby corrected as shown below:

On the cover page,

[*] Notice: Subject to any disclaimer, the term of this patent is extended or adjusted under 35 USC 154(b) by 581 days

Delete the phrase "by 581 days" and insert – by 584 days--

UNITED STATES PATENT AND TRADEMARK OFFICE

Commissioner for Patents
United States Patent and Trademark Office
P.O. Box 1450
Alexandria, VA 22313-1450
www.uspto.gov

MAILED

MAY 24 2011

PCT LEGAL ADMINISTRATION

THORNE & HALAJIAN, LLP
111 WEST MAIN STREET
BAY SHORE NY 11706

In re Application of CRAWFORD et al.
Application No.: 11/911,383
PCT Appl No.: PCT/EP06/03691
Int'l Filing Date: 07 April 2006
Priority Date: 15 April 2005
Attorney Docket No.: FT05640
For: COMMUNICATIONS SYSTEM AND METHOD

: DECISION ON PETITION
: UNDER 37 CFR 1.137(b) & 1.47(a)

This is a decision on applicant's petitions under 37 CFR 1.137(b) to revive the application & under 37 CFR 1.47(a) to accept the application without the signature of joint inventor RYAN CRAWFORD, and filed in the United States Patent and Trademark Office (USPTO) on 09 March 2011.

BACKGROUND

On 12 October 2007, applicant filed a transmittal letter requesting U.S. national stage entry of international application PCT/EP06/03691.

On 18 August 2008, a Notification to Missing Requirements was mailed to applicant indicating, *inter alia*, that an oath or declaration, in accordance with 37 CFR 1.497(a) and (b), was required. On 09 June 2009, a Notification of Abandonment was mailed to applicant indicating that applicant failed to respond to the Notification of Missing Requirements.

On 09 March 2011, applicant filed the instant petition along with a declaration, executed by the joint inventor on behalf of the nonsigning inventor and a petition to revive under 37 CFR 1.137(b). The petition under 37 CFR 1.47(a), in an attempt to satisfy the requirements of 35 U.S.C. 371(c)(4), requested the acceptance of the application without the signature of inventor RYAN CRAWFORD alleging that the inventor refuses to sign the application papers.

DISCUSSION

Petition under 37 CFR 1.47(a)

A petition under 37 CFR §1.47(a) must be accompanied by (1) the fee under 37 CFR §1.17(g), (2) factual proof that the non-signing joint inventor(s) refuses to execute the application or cannot be reached after diligent effort, (3) a statement of the last known address of the non-signing inventor(s), and (4) an oath or declaration by each available joint inventor on his

or her own behalf and on behalf of the non-signing joint inventor(s).

Petitioner satisfied Item (1) with the payment of the petition fee. Item (3) is satisfied because the last known address for the non-signing inventor was provided. Item (4) is satisfied with the submission of the declaration executed in compliance with 37 CFR 1.497(a) and (b).

With respect to Item (2) above, Section 409.03(d) of the Manual of Patent Examining Procedure (MPEP), Proof of Unavailability or Refusal[1], states, in pertinent part:

> A refusal by an inventor to sign an oath or declaration when the inventor has not been presented with the application papers does not itself suggest that the inventor is refusing to join the application unless it is clear that the inventor understands exactly what he or she is being asked to sign and refuses to accept the application papers. *A copy of the application papers should be sent to the last known address of the nonsigning inventor*, or, if the nonsigning inventor is represented by counsel, to the address of the nonsigning inventor's attorney.... *It is reasonable to require that the inventor be presented with the application papers before a petition under 37 CFR 1.47 is granted since such a procedure ensures that the inventor is apprised of the application to which the oath or declaration is directed. In re Gray*, 115 USPQ 80 (Comm'r Pat. 1956)
>
> Where a refusal of the inventor to sign the application papers is alleged, the circumstances of the presentation of the application papers and of the refusal must be specified in a statement of facts by the person who presented the inventor with the application papers and/or to whom the refusal was made. Statements by a party not present when an oral refusal is made will not be accepted.
>
> *Proof that a bona fide attempt was made to present a copy of the application papers (specification, including claims, drawings, and oath or declaration) to the nonsigning inventor for signature, but the inventor refused to accept delivery of the papers or expressly stated that the application papers should not be sent, may be sufficient.* When there is an express oral refusal, that fact along with the time and place of the refusal must be stated in the statement of facts. When there is an express written refusal, a copy of the document evidencing that refusal must be made part of the statement of facts. The document may be redacted to remove material not related to the inventor's reasons for refusal.

---

[1] MPEP Section 409.03(d) also provides guidance where inability to find or reach a nonsigning inventor "after diligent effort" is the reason for filing under 37 CFR 1.47. A statement of facts should be submitted that fully describes the exact facts which are relied on to establish that a diligent effort was made. The statement of facts must be signed, where at all possible, by a person having first-hand knowledge of the facts recited therein. Statements based on hearsay will not normally be accepted. Copies of documentary evidence such as internet searches, certified mail return receipts, cover letters of instructions, telegrams, that support a finding that the nonsigning inventor could not be found or reached should be made part of the statement. The steps taken to locate the whereabouts of the nonsigning inventor should be included in the statement of facts. It is important that the statement contain facts as opposed to conclusions.

> When it is concluded by the 37 CFR 1.47 applicant that a nonsigning inventor's conduct constitutes a refusal, all facts upon which the conclusion is based should be stated in a statement of facts in support of the petition or directly in the petition. If there is documentary evidence to support facts alleged in the petition or any statement of facts, such evidence should be submitted. Whenever a nonsigning inventor gives a reason for refusing to sign the application oath or declaration, that reason should be stated in the petition.

(Emphasis added.)

Here, Petitioner provides a first-hand statement of facts from Francoise Tanic, legal assistant to in-house counsel Frederic Thiel, regarding the refusal of the nonsigning inventor Ryan Crawford. Ms. Tanic indicated that on 08 February 2008, an email was sent to Mr. Crawford along with electronic copies of the declaration, power of attorney and assignment documents only. On 11 February 2008, she received an email reply from Mr. Crawford, who provided his current mailing address, and asked a question regarding compensation for signing the documents. While Mr. Thiel responded to Mr. Crawford's compensation question, it does not appear from the record that a copy of the application papers were sent to the current known address of the nonsigning inventor. An email reminder was sent on 05 November 2008, requesting return of the documents. On the same day, Mr. Crawford responded indicating that the documents had an incorrect address for him and that his counsel had advised him not to sign the assignment.

Petitioner has not presented any evidence that *a complete copy of the application papers, that is, specification, including claims and drawings, and an oath or declaration*, were presented to the nonsigning inventor for his signature at his last known address. The 07 February 2008 correspondence sent to the former address of the nonsigning inventor was returned as undeliverable. Thereafter, the email letter of 8 February 2008, from Francoise Tanic to the nonsigning inventor does not indicate that a complete copy of the application papers were presented to the nonsigning inventor for signature. Instead, the letter indicates that a Declaration, Power of Attorney and Assignment were provided to him. Moreover, thereafter, on 11 February 2008, from the email of the nonsigning inventor, it is clear that his mailing address is incorrect. However, there is no evidence that a complete copy of the application papers were presented to the nonsigning inventor at his current last known address (specification, including claims, drawings, and oath or declaration) for his signature.

As stated in the MPEP as set forth above, the nonsigning inventor's refusal to sign an oath or declaration when the inventor has not been presented with the application papers *does not itself suggest* that the inventor is refusing to join the application unless it is clear that the inventor understands exactly what he or she is being asked to sign and refuses to accept the application papers. *A copy of the application papers should be sent to the last known address of the nonsigning inventor*; to ensure that the inventor is apprised of the application to which the oath or declaration is directed. A refusal to sign the assignment papers is not a refusal to sign the declaration.

Petitioner must present a copy of the application papers (specification, including claims, drawings, and oath or declaration) to the nonsigning inventor for her signature at her last known address. Proof of the delivery must accompany any renewed petition along with a first hand

statement of facts. The circumstances of the presentation of the application papers and of the refusal must be specified in a statement of facts by the person who presented the inventor with the application papers and/or to whom the refusal was made. Statements by a party not present when an oral refusal is made will not be accepted.

As set forth above, Petitioner did not provide a first hand statement of facts under 37 CFR 1.47(a) which indicated that a complete copy of the application papers were sent to the nonsigning inventor and to describe the inventor's refusal. Therefore, it cannot be concluded at this time that the nonsigning inventor refuses or is unavailable to sign the application. Petitioner has not satisfied Item (2). Accordingly, it is inappropriate to accord the national stage application status under 37 CFR §1.47(a) at this time.

Petition to Revive under 37 CFR 1.137(b)

A petition under 37 CFR 1.137(b) must be filed promptly after the date on which the application became abandoned. Such a petition under 37 CFR 1.137(b) must be accompanied by (1) a proper reply; (2) the petition fee required by law, and (3) a statement that the "entire delay in filing the required reply from the due date for the reply until the filing of a grantable petition pursuant to 37 CFR 1.137(b) was unintentional". Item (1) is satisfied with the submission of the declaration and petition under 37 CFR 1.47(a). Item (2) is satisfied with the payment of the petition fee. Item (3) is satisfied with petitioner's statement that "the entire delay in filing the required reply from the due date for the required reply until the filing of a grantable petition under 37 CFR 1.137(b) was unintentional". The petition to revive is GRANTED.

CONCLUSION

The petition to revive under 37 CFR 1.137(b) is **GRANTED**. The petition under 37 CFR §1.47(a) is **DISMISSED WITHOUT PREJUDICE**.

Any reconsideration on the merits of the petition under 37 CFR §1.47(a) must be filed within TWO (2) MONTHS from the mail date of this decision. Any reconsideration request should include a cover letter entitled "Renewed Petition Under 37 CFR §1.47(a)." No petition fee is required. Any further extensions of time available may be obtained under 37 CFR 1.136(a).

Any further correspondence with respect to this matter may be filed electronically via EFS-Web selecting the document description "Petition for review and processing by the PCT Legal Office" or by mail addressed to Mail Stop PCT, Commissioner for Patents, Office of PCT Legal Administration, P.O. Box 1450, Alexandria, Virginia 22313-1450, with the contents of the letter marked to the attention of the Office of PCT Legal Administration.

/Cynthia M .Kratz/
Cynthia M. Kratz
Attorney Advisor

PCT Legal Office
Office of PCT Legal Administration
Telephone: (571) 272-3286
Facsimile (571) 272-0459

UNITED STATES PATENT AND TRADEMARK OFFICE

Commissioner for Patents
United States Patent and Trademark Office
P.O. Box 1450
Alexandria, VA 22313-1450
www.uspto.gov

MAILED

OCT 26 2011

PCT LEGAL ADMINISTRATION

THORNE & HALAJIAN, LLP
111 WEST MAIN STREET
BAY SHORE NY 11706

In re Application of CRAWFORD et al.
Application No.: 11/911,383
PCT No.: PCT/EP06/03691
Int. Filing: 07 April 2006
Priority Date: 15 April 2005
Attorney Docket No.: FT05640
For: COMMUNICATIONS SYSTEM AND METHOD

: DECISION ON PETITION
: UNDER 37 CFR 1.47(a)

This is a decision on applicant's renewed petition under 37 CFR 1.47(a), filed in the United States Patent and Trademark Office (USPTO) on 24 August 2011, to accept the application without the signature of the joint inventor RYAN CRAWFORD. Applicant's request for a one month extension of time is granted.

BACKGROUND

The procedural history of this application was set forth in the decision mailed on 24 May 2011 and is hereby incorporated by reference. The decision dismissing the petition indicated that Petitioner had not provided factual proof that the non-signing joint inventor refused to execute the application or could not be reached after diligent effort.

DISCUSSION

A petition under 37 CFR §1.47(a) must be accompanied by (1) the fee under 37 CFR §1.17(g), (2) factual proof that the non-signing joint inventor(s) refuses to execute the application or cannot be reached after diligent effort, (3) a statement of the last known address of the non-signing inventor(s), and (4) an oath or declaration by each available joint inventor on his or her own behalf and on behalf of the non-signing joint inventor(s).

Applicant previously satisfied Items (1), (3) and (4).

With regard to item (2), applicant submitted the 24 August 2011 firsthand statement of Gregory L. Thorne, attorney for assignee. Mr. Thorne states that on 12 August 2011, he sent a complete copy of the application papers to the nonsigning inventor Crawford for his signature. Thereafter, in email communication with Mr. Crawford, he refused to sign the application papers without remuneration. The action taken by petitioner is sufficient to prove that the nonsigning inventor refuses to sign the application papers. Under these circumstances, it can now be concluded that the nonsigning inventor is unavailable to sign the application. Petitioner has satisfied Item (2) by demonstrating in the first hand statements the " diligent efforts" that were made to locate the nonsigning inventor.

In sum, Petitioner has satisfied Items (1)-(4). Accordingly, it is appropriate to accord the national stage application status under 37 CFR §1.47(a) at this time.

CONCLUSION

The petition under 37 CFR 1.47(a) is **GRANTED**.

The U.S. Designated/Elected Office has accepted the application as a 37 CFR 1.47(a) application using the declaration filed 09 March 2011. The application has an international filing date of 07 April 2006 under 35 U.S.C. 363, and a date of 09 March 2011 under 35 U.S.C. 371©.

As provided in 37 CFR 1.47(a), a notice of the filing of this application will be forwarded to the non-signing inventor at his respective last known address of record. Also, a notice of the filing of this application will be published in the Official Gazette.

/Cynthia M. Kratz/
Cynthia M. Kratz
Attorney Advisor
PCT Legal Office
Office of PCT Legal Administration

Telephone: (571) 272-3286
Facsimile (571) 272-0459

UNITED STATES PATENT AND TRADEMARK OFFICE

Commissioner for Patents
United States Patent and Trademark Office
P.O. Box 1450
Alexandria, VA 22313-1450
www.uspto.gov

MAILED

OCT 26 2011

PCT LEGAL ADMINISTRATION

RYAN CRAWFORD
5 ASHBANK GARDENS
SPRINGFIELD
FIFE
KY15 5UX
GB

In re Application of CRAWFORD et al.
Application No.: 11/911,383
PCT No.: PCT/EP06/03691
Int. Filing: 07 April 2006
Priority Date: 15 April 2005
Attorney Docket No.: FT05640
For: COMMUNICATIONS SYSTEM AND METHOD

Dear Mr. Crawford:

You are named as an inventor in the above identified United States patent application, filed under the provisions of 37 CFR 1.47(a) and 35 U.S.C. § 116. Should a patent be granted, you will be designated as an inventor.

As a named inventor, you are entitled to inspect any paper in the file wrapper of the application, order copies of all or any part thereof (at a prepaid cost per 37 CFR 1.19) or to make your position of record in the application. Alternatively, you may arrange to do any of the preceding through a registered patent agent or attorney presenting written authorization from you. If you care to join in the application, counsel of record (see below) would presumably assist you. Joining in the application would entail the filing of an appropriate oath or declaration by you pursuant to 37 CFR 1.63.

/Cynthia M. Kratz/
Cynthia M. Kratz
Attorney Advisor
PCT Legal Office
Telephone: (571) 272-3286
Facsimile: (571) 273-0459

THORNE & HALAJIAN, LLP
111 WEST MAIN STREET
BAY SHORE NY 11706

UNITED STATES PATENT AND TRADEMARK OFFICE

Commissioner for Patents
United States Patent and Trademark Office
P.O. Box 1450
Alexandria, VA 22313-1450
www.uspto.gov

KF ROSS PC
5683 RIVERDALE AVENUE
SUITE 203 BOX 900
BRONX, NY 10471-0900

MAILED
DEC 16 2010
OFFICE OF PETITIONS

In re Application of
Marc Augoyard, et al.
Application No. 11/911,405
Filed: March 17, 2008
Attorney Docket No. 24682

DECISION ON PETITION
TO MAKE SPECIAL UNDER
37 CFR 1.102(c)(1)

This is a decision on the renewed petition under 37 CFR 1.102(c)(1), filed October 19, 2010, to make the above-identified application special based on applicant's health as set forth in M.P.E.P. § 708.02, Section III.

The petition is **GRANTED**.

A grantable petition to make an application special under 37 CFR 1.102(c)(1) and MPEP § 708.02, Section III: Applicant's Health, must be accompanied by evidence showing such as a doctor's certificate or other medical certificate that the state of health of the applicant is such that he or she might not be available to assist in the prosecution of the application if it were to run its normal course. No fee is required

The instant petition includes the required doctor's statement from applicant Jacques Peyrot's physician. Accordingly, the above-identified application has been accorded "special" status.

Telephone inquiries concerning this decision should be directed to undersigned at 571-272-1642.

All other inquiries concerning either the examination or status of the application should be directed to the Technology Center.

The application is being forwarded to the Technology Center Art Unit 3775 for action on the merits commensurate with this decision.

/AMW/
April M. Wise
Petitions Examiner
Office of Petitions

SPE RESPONSE FOR CERTIFICATE OF CORRECTION

DATE : **4-17-12**

TO SPE OF : ART UNIT **1741**

SUBJECT : Request for Certificate of Correction for Appl. No.: **11911415** Patent No.: **8119058**

CofC mailroom date: 4-9-12

Please respond to this request for a certificate of correction within 7 days.

FOR IFW FILES:

Please review the requested changes/corrections as shown in the **COCIN** document(s) in the IFW application image. No new matter should be introduced, nor should the scope or meaning of the claims be changed.

Please complete the response (see below) and forward the completed response to scanning using document code **COCX**.

FOR PAPER FILES:

Please review the requested changes/corrections as shown in the attached certificate of correction. Please complete this form (see below) and forward it with the file to:

Certificates of Correction Branch (CofC)
Randolph Square – 9D40-E
Palm Location 7580

Note:

Omega Lewis

703-756-1575

Thank You For Your Assistance

The request for issuing the above-identified correction(s) is hereby:
Note your decision on the appropriate box.

[X] **Approved** — **All** changes apply.

☐ **Approved in Part** — Specify below which changes **do not** apply.

☐ **Denied** — State the reasons for denial below.

Comments:

/Matthew J. Daniels/ SPE, AU 1741
SPE **Art Unit**

SPE RESPONSE FOR CERTIFICATE OF CORRECTION

Paper No.: _____

DATE : April 28, 2011

TO SPE OF : ART UNIT 1797

SUBJECT : Request for Certificate of Correction for Appl. No 11/911,475.: 7826961 B2

Please respond to this request for a certificate of correction within 7 days.

FOR IFW FILES:

Please review the requested changes/corrections as shown in the **COCIN** document(s) in the IFW application image. No new matter should be introduced, nor should the scope or meaning of the claims be changed.

Please complete the response (see below) and forward the completed response to scanning using document code **COCX**.

FOR PAPER FILES:

Please review the requested changes/corrections as shown in the attached certificate of correction. Please complete this form (see below) and forward it with the file to:

Certificates of Correction Branch (CofC)

Should the change(s) Be made?

RoChaun Johnson
Certificates of Correction Branch
571 272-0470

Thank You For Your Assistance

The request for issuing the above-identified correction(s) is hereby:
Note your decision on the appropriate box.

- **Approved** — **All** changes apply.
- ☐ **Approved in Part** — Specify below which changes **do not** apply.
- ☐ **Denied** — State the reasons for denial below.

Comments: _____

_____ **SPE** _____ **Art Unit**

UNITED STATES PATENT AND TRADEMARK OFFICE

Commissioner for Patents
United States Patent and Trademark Office
P.O. Box 1450
Alexandria, VA 22313-1450
www.uspto.gov

RATNERPRESTIA
P.O. BOX 980
VALLEY FORGE PA 19482

MAILED

JAN 13 2011

OFFICE OF PETITIONS

In re Application of	:	
Peter Drott, et al.	:	
Application No. 11/911,578	:	DECISION GRANTING PETITION
Filed: October 15, 2007	:	UNDER 37 CFR 1.313(c)(3)
Attorney Docket No. PC11209US	:	

This is a decision on the petition, filed January 11, 2011, under 37 CFR 1.313(c)(3) to withdraw the above-identified application from issue after payment of the issue fee.

The petition is **GRANTED**.

Petitioner requests that the above-identified application be withdrawn from issue for express abandonment. *See* 37 CFR 1.313(c)(3).

The application is hereby withdrawn from issue, and the abandonment is hereby recognized.

Telephone inquiries should be directed to Terri Johnson at (571) 272-2991.

/Terri Johnson/
Terri Johnson
Petitions Examiner
Office of Petitions

SPE RESPONSE FOR CERTIFICATE OF CORRECTION

DATE : **08/26/11**

TO SPE OF : ART UNIT: **2889 Attn: TON MINH TOAN (TOAN) T (SPE)**

SUBJECT : Request for Certificate of Correction for Appl. No.: 11/911595 Patent No.: 7880389

CofC mailroom date: 08/19/11

Please respond to this request for a certificate of correction within 7 days.

FOR IFW FILES:

Please review the requested changes/corrections as shown in the **COCIN** document(s) in the IFW application image. No new matter should be introduced, nor should the scope or meaning of the claims be changed.

Please complete the response (see below) and forward the completed response to scanning using document code **COCX**.

FOR PAPER FILES:

Please review the requested changes/corrections as shown in the attached certificate of correction. Please complete this form (see below) and forward it with the file to:

Certificates of Correction Branch (CofC)
Randolph Square – 9D10-A
Palm Location 7580

Note: Please check Claim 4 (amended claim 15)
Should this claim be amended again or not

Tasneem Siddiqui
Certificates of Correction Branch
703-756-1814 & 703-756-1593

Thank You For Your Assistance

The request for issuing the above-identified correction(s) is hereby:
Note your decision on the appropriate box.

- ☐ **Approved** — **All** changes apply.
- ☐ **Approved in Part** — Specify below which changes **do not** apply.
- ☐ **Denied** — State the reasons for denial below.

Comments: The correction is approved since it corrects a typographical error and does not change the scope of the claims.

/Nathaniel J. Lee/ — Examiner
2889 — Art Unit

UNITED STATES PATENT AND TRADEMARK OFFICE

Commissioner for Patents
United States Patent and Trademark Office
P.O. Box 1450
Alexandria, VA 22313-1450
www.uspto.gov

MAILED

DEC 14 2010

OFFICE OF PETITIONS

SALIWANCHIK LLOYD & SALIWANCHIK
A PROFESSIONAL ASSOCIATION
PO Box 142950
GAINESVILLE FL 32614

In re Application of	:
Yin et al.	:
Application No. 11/911,629	: ON APPLICATION FOR
Filed: October 15, 2007	: PATENT TERM ADJUSTMENT
Attorney Docket No. UF.801XT	:
Title: WIRELESS EMBEDDED TEST	:
SIGNAL GENERATION	:

This is a decision on the "APPLICATION FOR PATENT TERM ADJUSTMENT UNDER 37 CFR § 1.705(b)," filed October 9, 2010. Applicants submit that the correct patent term adjustment to be indicated on the patent is four hundred nine (409) days, not seven hundred thirteen (713) days as calculated by the Office as of the mailing of the initial determination of patent term adjustment.

The request for review of the patent term adjustment is **GRANTED**.

The Office has updated the PAIR screen to reflect the correct Patent Term Adjustment at the time of the mailing of the Notice of Allowance is four hundred nine (409) days. A copy of the updated PAIR screen, showing the correct determination, is enclosed.

The Office acknowledges submission of the $200.00 fee set forth in 37 CFR 1.18(e). No additional fees are required.

On September 1, 2010, the Office mailed the Determination of Patent Term Adjustment under 35 U.S.C. 154(b) in the above-identified application. The Notice stated the patent term adjustment to date is 713 days. Applicants dispute the calculation.

The Office has considered applicants' argument and finds it persuasive.

Applicants contend that an adjustment of 409 days instead of 713 days is required for failure by the Office to mail at least one of the notifications under 35 U.S.C. 132 not later than fourteen months after the date on which the application fulfilled the requirements under 35 U.S.C. 371, pursuant to § 1.702(a)(1).

A non-final Office action was mailed on January 28, 2010, which is 14 months and 409 days after the application fulfilled the requirements of 35 U.S.C. 371 on October 15, 2007. A review of the record shows that the requirements of 35 U.S.C. 371 were fulfilled on October 15, 2007.

As such an adjustment of 409 days (December 16, 2008- January 28, 2010) is warranted.

The total number of days of Office delay at the time of the mailing of the Notice of Allowance is 409 days.

In view thereof, it is concluded that the determination of patent term adjustment at the time of the mailing of the Notice of Allowance is four hundred nine (409) days.

Any request for reconsideration of the patent term adjustment indicated on the patent must be timely filed within 2 months after issuance pursuant to 37 CFR 1.705(d) and **must** include payment of the required fee under 37 CFR 1.18(e).

The Office of Data Management has been advised of this decision. This matter is being referred to the Office of Data Management for issuance of the patent.

Telephone inquiries specific to this matter should be directed to Petitions Attorney Charlema Grant, at (571) 272-3215.

Anthony Knight
Director
Office of Petitions

Enclosure: Copy of REVISED PALM Screen

Patent Term Adjustments

PTA/PTE Information | Patent Term Adjustment | Patent Term Extension

Application Number*: 11911629 Search | Explanation of PTA Calculation | Explanation of PTE Calculation

PTA Calculations for Application: 11911629

Application Filing Date	10/15/2007	OverLapping Days Between (A and B) or (A and C)	0
Issue Date of Patent		Non-Overlapping USPTO Delays:	713
A Delays	713	PTO Manual Adjustment	-304
B Delays	0	Applicant Delay (APPL)	0
C Delays	0	Total PTA (days)	409

* - Sorted Column

File Contents History

Action Number	Action Recorded Date	Action Due Date	Action Code	Action Description	Duration PTO	Duration APPL	Parent Action Number
67	12/12/2010		P028	Adjustment of PTA Calculation by PTO		304	0
58	09/01/2010		MN/=.	Mail Notice of Allowance			0
57	08/28/2010		IREV	Issue Revision Completed			0
56	08/28/2010		DVER	Document Verification			0
55	08/28/2010		N/=.	Notice of Allowance Data Verification Completed			0
54	08/24/2010		CNTA	Notice of Allowability			0
53	08/18/2010		FWDX	Date Forwarded to Examiner			0
52	08/12/2010		A...	Response after Non-Final Action			0
51	06/15/2010		ELC_RVW.	Electronic Review			0
50	06/15/2010		EML_NTF	Email Notification			0
49	06/15/2010		MCTNF	Mail Non-Final Rejection			0
48	06/11/2010		CTNF	Non-Final Rejection			0
47	06/10/2010		FWDX	Date Forwarded to Examiner			0
45	06/10/2010		FWDX	Date Forwarded to Examiner			0
43	06/10/2010		ABN9	Disposal for a RCE / CPA / R129			0
46	06/07/2010		AMSB	Amendment Submitted/Entered with Filing of CPA/RCE			0
42	06/07/2010		BRCE	Workflow - Request for RCE - Begin			0
41	05/10/2010		ELC_RVW	Electronic Review			0
40	05/10/2010		EML_NTF	Email Notification			0
39	05/10/2010		MCTFR	Mail Final Rejection (PTOL - 326)			0
38	05/05/2010		CTFR	Final Rejection			0
37	05/04/2010		FWDX	Date Forwarded to Examiner			0
36	04/27/2010		A...	Response after Non-Final Action			0
35	04/27/2010		C614	New or Additional Drawing Filed			0
34	01/28/2010		ELC_RVW	Electronic Review			0
33	01/28/2010		EML_NTF	Email Notification			0
32	01/28/2010	02/15/2008	MCTNF	Mail Non-Final Rejection	713		1
31	01/25/2010		CTNF	Non-Final Rejection			0
25	12/11/2009		DOCK	Case Docketed to Examiner in GAU			0
24	08/29/2009		DOCK	Case Docketed to Examiner in GAU			0
23	08/23/2009		TI1050	Transfer Inquiry to GAU			0
22	08/20/2009		TI1050	Transfer Inquiry to GAU			0
21	07/27/2009		TI1050	Transfer Inquiry to GAU			0
20	06/18/2009		PA.	Change in Power of Attorney (May Include Associate POA)			0
19	06/12/2009		CAD	Correspondence Address Change			0
44	06/07/2009		RCEX	Request for Continued Examination (RCE)			0
18	05/14/2009		PG-ISSUE	PG-Pub Issue Notification			0
17	04/17/2009		TSSCOMP	IFW TSS Processing by Tech Center Complete			0
12	02/23/2009		OIPE	Application Dispatched from OIPE			0
9	02/06/2009		FLRCPT.O	Filing Receipt			0
8	02/06/2009		M903	Notice of DO/EO Acceptance Mailed			0
10	02/05/2009		PGPC	Sent to Classification Contractor			0
4	10/19/2007		L194	Cleared by OIPE CSR			0
3	10/19/2007		SCAN	IFW Scan & PACR Auto Security Review			0
30	10/15/2007		IDSC	Information Disclosure Statement considered			0
16	10/15/2007		RQPR	Request for Foreign Priority (Priority Papers May Be Included)			0
15	10/15/2007		A.PE	Preliminary Amendment			0
14	10/15/2007		RCAP	Reference capture on IDS			0
13	10/15/2007		M844	Information Disclosure Statement (IDS) Filed			0
11	10/15/2007		371COMP	371 Completion Date			0
2	10/15/2007		WIDS	Information Disclosure Statement (IDS) Filed			0
1	10/15/2007		IEXX	Initial Exam Team nn			0

Export to: Excel

UNITED STATES PATENT AND TRADEMARK OFFICE

COMMISSIONER FOR PATENTS
UNITED STATES PATENT AND TRADEMARK OFFICE
P.O. BOX 1450
ALEXANDRIA, VA 22313-1450
www.uspto.gov

HISCOCK & BARCLAY, LLP
2000 HSBC PLAZA
100 Chestnut Street
ROCHESTER, NY 14604-2404

MAILED

DEC 07 2010

PCT LEGAL ADMINISTRATION

In re Application of :
GRUNDL *et al* :
Application No.: 11/911,638 : DECISION
Filing Date: 15 October 2007 :
Atty. Docket No.: 3027987(9A-102 753) :
For: LINEAR ACTUATOR :

This application is before the Office of PCT Legal Administration for consideration of matters under 35 U.S.C. 371.

BACKGROUND

On 30 March 2006, applicants filed international application No. PCT/EP2006/002905 which claimed priority to German application No. 10 2005 017 481.7 filed on 15 April 2005, and which designated the United States. The application became abandoned as to the United States 30 months from the priority date, i.e. 15 October 2007.

On 15 October 2007, applicants filed application papers which were accompanied by, *inter alia*,: a cover letter titled REQUEST FOR FILING A CONTINUATION OR DIVISION OF INTERNATIONAL APPLICATION with an indication that the application was being filed under 37 CFR 1.53(b) and also a statement in the first paragraph of the specification that the application is a continuation of international application PCT/EP2006/002905. The original EFS filing included an indication that the application was a national stage filing under 35 U.S.C. 371 and the originally filed application papers also included an Application Data Sheet (ADS) which also indicated that the application was a national stage filing under 35 U.S.C. 371.

As a result of the EFS and ADS indications, upon receipt the application papers were processed as a national stage filing under 35 U.S.C. 371 including the issuance of a NOTIFICATION OF MISSING REQUIREMENTS UNDER 35 U.S.C. 371 (Form PCT/DO/EO/905), a NOTIFICATION OF ACCEPTANCE OF APPLICATION UNDER 35 U.S.C. 371 AND 37 CFR 1.495 (Form PCT/DO/EO/903), and an official filing receipt mailed on 08 August 2008 indicating that the application was a national stage filing under 35 U.S.C. 371 of PCT/EP2006/002905.

DISCUSSION

A review of the originally filed application papers reveals that they include separate indications that the present application be processed under 35 U.S.C. 111 as a continuation of PCT/EP2006/002905 and also as a national stage filing under 35 U.S.C. 371 of PCT/EP2006/002905.

In this regard, 37 CFR 1.495(g) states:

> The documents and fees submitted under paragraphs (b) and (c) of this section must be clearly identified as a submission to enter the national stage under 35 U.S.C. 371. Otherwise, the submission will be considered as being made under 35 U.S.C. 111(a).

Additionally, section 1893.03(a) of the Manual of Patent Examining Procedure states in part:

> [I]f there are any conflicting instructions as to whether the filing is under 35 U.S.C. 111(a) or 35 U.S.C. 371, the application will be accepted as filed under 35 U.S.C. 111(a). A conflicting instruction will be present, for example, where applicant includes in the initial submission under 35 U.S.C. 371, a "Utility Patent Application Transmittal" (Form PTO/SB/05) or includes a benefit claim under 35 U.S.C. 120 to the international application.

In that the originally filed application papers contained conflicting instructions they should have been processed under 35 USC 111, and the processing of the application under 35 U.S.C. 371 was in error.

CONCLUSION

For the reasons above, the NOTIFICATION OF MISSING REQUIREMENTS UNDER 35 U.S.C. 371 (Form PCT/DO/EO/905), the NOTIFICATION OF ACCEPTANCE OF APPLICATION UNDER 35 U.S.C. 371 AND 37 CFR 1.495 (Form PCT/DO/EO/903), and the official filing receipt mailed on 08 August 2008, are hereby **VACATED**.

Applicants should note that the review of the application papers reveals that the application does not contain a claim for priority under 35 U.S.C. 119 to the prior filed German application. As such, applicant may wish to consider filing a petition under 37 CFR 1.55.

This application is being returned to the National Stage Processing Branch of the International Division and the Office of Initial Patent Examination for further processing in accordance with this decision including, but not limited to, the further processing of the application under 35 USC 111, the removal of any national stage papers received from the International Bureau from the application file, the correcting of any fees charged, and the issuance of a corrected filing receipt indicating that the application is a continuation under 35 USC 111 of international application No. PCT/EP2006/002905.

Please direct further correspondence with respect to this matter to the Commissioner for Patents, Mail Stop PCT, PO Box 1450, Alexandria, VA 22313-1450, and address the contents of the letter to the attention of the Office of PCT Legal Administration.

Richard R. Cole
Senior PCT Legal Examiner
Office of PCT Legal Administration

(571) 272-3281

UNITED STATES PATENT AND TRADEMARK OFFICE

COMMISSIONER FOR PATENTS
UNITED STATES PATENT AND TRADEMARK OFFICE
P.O. BOX 1450
ALEXANDRIA, VA 22313-1450
www.uspto.gov

HISCOCK & BARCLAY, LLP
2000 HSBC PLAZA
100 CHESTNUT STREET
ROCHESTER, NY 14604-2404

MAILED

APR 27 2011

PCT LEGAL ADMINISTRATION

In re Application of	:	
GRÜNDL et al	:	
Application No.: 11/911,638	:	DECISION ON PETITION
Filing Date: October 15, 2007	:	UNDER 37 CFR 1.55
Attorney Docket No.: 3027987(9A-102 753)	:	

This is a decision on the petition under 37 CFR 1.55(c), filed December 15, 2010, for acceptance of an unintentionally delayed claim under 35 U.S.C. 119(a)-(d) for benefit of the filing date of German Application No. 10 2005 017 481.7 filed April 15, 2005.

The petition is **DISMISSED**.

The present nonprovisional application was filed after November 29, 2000, and did not include a reference to the foreign application, for which benefit is now sought, within the later of four months from the actual filing date of the application or sixteen months from the filing date of the prior foreign application. Therefore, since the claim for priority is submitted after the period specified in 37 CFR 1.55(a)(1)(i), this is an appropriate petition under the provisions of 37 CFR 1.55(c).

A petition under 37 CFR 1.55(c) to accept an unintentionally delayed claim for priority requires:

(1) the claim submitted with the petition must identify the prior foreign application for which priority is claimed, as well as any foreign application for the same subject matter and having a filing date before that of the application for which priority is claimed, by the application number, country, and the filing date and be included either in an oath or declaration (37 CFR 1.63(c)(2)) or in an Application Data Sheet (37 CFR 1.76(b)(6);
(2) the surcharge as set forth in 37 CFR 1.17(t); and
(3) a statement that the entire delay between the date the claim was due under 37 CFR 1.55(a)(1) and the date the claim was filed was unintentional. (The Director may require additional information where there is a question whether the delay was unintentional.)

The instant petition fails to comply with item (1) above. In this regard, a review of the file record fails to disclose that the priority information was included in an oath or declaration or in an Application Data Sheet (ADS) in accordance with 37 CFR 1.76(b)(6). Unless provided in an application data sheet, 37 CFR 1.63(c)(2) requires that the oath or declaration must identify the foreign application for patent or inventor's certificate for which priority is claimed under 37 CFR 1.55, and any foreign applications having a filing date before that of the application on which priority is claimed, by specifying the application number, country, day, month, and year of its filing. Note MPEP 201.14, page 200-84 (Rev. 5, August 2006), last paragraph, second column.

In view of the above, compliance with 37 CFR 1.63(c)(2) or 37 CFR 1.76(b)(6) must be satisfied if applicant desires to claim priority to the foreign application noted in the petition. Applicant is advised that since the issue fee has already been paid in the present application, entry of an ADS at this time is not permitted. See 37 CFR 1.312 and MPEP, Rev.5, August 2006, Section 201.11, p. 200-67, bottom right column.

Any future petition should include a cover letter and be entitled "Renewed Petition under 37 CFR 1.55(c)."

Applicant is further advised that a certified copy of the foreign priority application along with any required processing fee under 37 CFR 1.17(i) must be filed before a patent is granted on the present application. 37 CFR 1.55(a)(2). Because the present application is not a national stage application filed under 35 U.S.C. 371, applicant cannot rely on any copy of a certified priority document transmitted by the International Bureau. See MPEP 1896.

Any further correspondence with respect to this matter may be filed electronically via EFS-Web selecting the document description "Petition for review and processing by the PCT Legal Office" or by mail addressed to Mail Stop PCT, Commissioner for Patents, Office of PCT Legal Administration, P.O. Box 1450, Alexandria, Virginia 22313-1450, with the contents of the letter marked to the attention of the Office of PCT Legal Administration.

Bryan Lin

Bryan Lin
Legal Examiner
Office of PCT Legal Administration
571-272-3303

UNITED STATES PATENT AND TRADEMARK OFFICE

Commissioner for Patents
United States Patent and Trademark Office
P.O. Box 1450
Alexandria, VA 22313-1450
www.uspto.gov

HISCOCK & BARCLAY, LLP
2000 HSBC PLAZA
100 CHESTNUT STREET
ROCHESTER, NY 14604-2404

MAILED
JUN 22 2011
PCT LEGAL ADMINISTRATION

In re Application of	:	
GRÜNDL et al	:	
Application No.: 11/911,638	:	DECISION ON PETITION
Filing Date: October 15, 2007	:	UNDER 37 CFR 1.55
Attorney Docket No.: 3027987(9A-102 753)	:	

This is a decision on the renewed petition under 37 CFR 1.55(c), filed June 7, 2011, for acceptance of an unintentionally delayed claim under 35 U.S.C. 119(a)-(d) for benefit of the filing date of German Application No. 10 2005 017 481.7 filed April 15, 2005.

The petition is **GRANTED**.

The present application was filed after November 29, 2000, and did not include a reference to the foreign application, for which benefit is now sought, within the later of four months from the actual filing date of the application or sixteen months from the filing date of the prior foreign application. Therefore, since the claim for priority is submitted after the period specified in 37 CFR 1.55(a)(1)(i), this is an appropriate petition under the provisions of 37 CFR 1.55(c).

A petition under 37 CFR 1.55(c) to accept an unintentionally delayed claim for priority requires:

(1) The nonprovisional application claiming the benefit of an earlier filing date must be filed on or after November 29, 2000;

(2) the claim submitted with the petition must identify the prior foreign application for which priority is claimed, as well as any foreign application for the same subject matter and having a filing date before that of the application for which priority is claimed, by the application number, country, and the filing date and be included either in an oath or declaration (37 CFR 1.63(c)(2)) or in an Application Data Sheet (37 CFR 1.76(b)(6);

(3) the surcharge as set forth in 37 CFR 1.17(t);

(4) a statement that the entire delay between the date the claim was due under 37 CFR 1.55(a)(1) and the date the claim was filed was unintentional. (The Commissioner may require additional information where there is a question whether the delay was unintentional); and

(5) the above-identified nonprovisional application must be filed within 12 months of the filing date of the foreign application.

The above-identified pending nonprovisional application was filed on October 15, 2007, which is after November 29, 2000 and claims benefit under 35 U.S.C. 120 and 365 to a U.S. nonprovisional application which was filed within 12 months of April 15, 2005 (the filing date of the foreign application to which benefit is now being claimed). On June 7, 2011, an executed declaration was received which identifies the foreign application for which priority is claimed by application number, country and filing date. The required petition fee has been received. Lastly, petitioner has provided an adequate statement of unintentional delay.

All requirements being met, the petition under 37 CFR 1.55(c) to accept an unintentionally delayed claim for priority under 35 U.S.C. § 119(a)-(d) is granted.

A Corrected Filing Receipt which reflects the above-noted foreign application accompanies this decision on petition.

Any inquiries concerning this decision may be directed to Bryan Lin at (571)272-3303. All other inquiries concerning either the examination procedures or status of the application should be directed to the Technology Center.

This matter is being referred to Technology Center AU 2834 for further processing.

Bryan Lin

Bryan Lin
Legal Examiner
Office of PCT Legal Administration
571-272-3303

UNITED STATES PATENT AND TRADEMARK OFFICE

Commissioner for Patents
United States Patent and Trademark Office
P.O. Box 1450
Alexandria, VA 22313-1450
www.uspto.gov

24738
PHILIPS INTELLECTUAL PROPERTY & STANDARDS
P.O. Box 3001
Briarcliff Manor, NY 10510-8001

MAILED

MAY 10 2011

PCT LEGAL ADMINISTRATION

In re Application of
HOLZBAUER *et al*
U.S. Application No.: 11/911,645
PCT No.: [Unclear]
Int. Filing Date: 12 April 2006
Priority Date: 18 April 2005
Docket No.: PH000016US1
For: EPILATING APPARATUS

DECISION

This decision is in response to applicants' request for a corrected filing receipt filed on 14 January 2011 which is treated under 37 CFR 1.181.

Applicants petition under 37 CFR 1.181 is **DISMISSED** without prejudice.

Applicants request that the filing receipt be amended to show the international application as PCT/IB06/051122. It is currently listed as PCT/IB06/11887.

A review of the subject application shows that applicants filed the above-captioned application as the national stage of PCT/IB06/11887 using the USPTO EFS-Web system on 15 October 2007. Accordingly, the application was processed by the USPTO as the national stage of PCT/IB06/11887. However, it appears that this is the wrong PCT number. The ADS and international filed with the initial papers lists the international application as PCT/IB06/051122. WIPO records indicate that the PCT number corresponding to the title and first-named inventor is also PCT/IB06/051122.

Applicants must file a petition pursuant to 37 CFR 1.182 to correct this mistake. A $400.00 petition fee must accompany this petition.

Applicants have **TWO (2) MONTHS** from the mail date of this communication to respond.

Failure to respond will result in the ABANDONMENT of the above-identified application.

It is noted that the Form PCT/DO/EO/903 and filing receipt mailed 21 July 2009 contain erroneous information and are hereby **VACATED**.

Any further correspondence with respect to this matter may be filed electronically using the USPTO EFS-Web or if mailed addressed to Mail Stop PCT, Commissioner for

Patents, Office of PCT Legal Administration, P.O. Box 1450, Alexandria, Virginia 22313-1450, with the contents of the letter marked to the attention of the Office of PCT Legal Administration.

James Thomson

James Thomson
Attorney Advisor
Office of PCT Legal Administration

Tel.: (571) 272-3302

UNITED STATES PATENT AND TRADEMARK OFFICE

Commissioner for Patents
United States Patent and Trademark Office
P.O. Box 1450
Alexandria, VA 22313-1450
www.uspto.gov

24738
PHILIPS INTELLECTUAL PROPERTY & STANDARDS
P.O. Box 3001
Briarcliff Manor, NY 10510-8001

MAILED

SEP 13 2011

PCT LEGAL ADMINISTRATION

In re Application of :
HOLZBAUER *et al* :
U.S. Application No.: 11/911,645 :
PCT No.: PCT/IB2006/051122 :
Int. Filing Date: 12 April 2006 :
Priority Date: 18 April 2005 :
Docket No.: PH000016US1 :
For: EPILATING APPARATUS :

DECISION

This decision is in response to the petition under 37 CFR 1.182 filed 11 July 2011.

BACKGROUND

On 15 October 2007, applicants filed papers using the USPTO EFS-Web system as the national stage of PCT/IB2006/011887. Several other papers filed at this time in the subject application listed the international application as PCT/IB2006/051122.

On 21 July 2009, a Notification of Acceptance of Application Under 35 U.S.C. 371 and 1.495 (Form PCT/DO/EO/903) and filing receipt were mailed. The international application was recorded as PCT/IB2006/011887.

On 14 January 2011, a request for a corrected filing receipt to change the international application to PCT/IB2006/051122 was submitted.

On 12 May 2011, a decision dismissing the request for a corrected filing receipt was mailed.

On 11 July 2011, applicants filed the subject petition under 37 CFR 1.182 to change the international application to PCT/IB2006/051122.

DISCUSSION

Applicants' petition under 37 CFR 1.182 to correct the PCT number in the above-captioned national stage application to PCT/IB2006/051122. The $400.00 petition fee has been paid.

A review of the subject application shows that applicants filed the above-captioned application as the national stage of PCT/IB06/11887 using the USPTO EFS-

Web system on 15 October 2007. However, the ADS and international papers filed 15 October 2007 records the international application as PCT/IB06/051122. WIPO records also show that the PCT number corresponding to the title and first-named inventor is PCT/IB06/051122.

Thus, it is clear that the subject application was intended to be filed as the national stage of PCT/IB06/051122 but for a clerical error made upon filing.

CONCLUSION

Applicants' petition under 37 CFR 1.182 is **GRANTED**.

USPTO records have been changed to reflect that the above-captioned application is the national stage of PCT/IB06/051122, which claims foreign priority to EP 051030050.0, filed 18 April 2005.

The Form PCT/DO/EO/903 and filing receipt mailed 21 July 2009 are hereby **VACATED**.

This application is being sent back to the DO/EO/US for processing the subject application as the national stage of PCT/IB06/051122 and mailing a new Form PCT/DO/EO/903 and filing receipt indicating this change.

James Thomson

James Thomson
Attorney Advisor
Office of PCT Legal Administration

Tel.: (571) 272-3302

UNITED STATES PATENT AND TRADEMARK OFFICE

Commissioner for Patents
United States Patent and Trademark Office
P.O. Box 1450
Alexandria, VA 22313-1450
www.uspto.gov

FITZPATRICK CELLA HARPER & SCINTO
1290 Avenue of the Americas
NEW YORK NY 10104-3800

MAILED
AUG 24 2011
OFFICE OF PETITIONS

In re Application of	:	
Mayumi Yamano	:	
Application No. 11/911,668	:	DECISION GRANTING PETITION
Filed: October 16, 2007	:	UNDER 37 CFR 1.313(c)(2)
Attorney Docket No. 00766.000129.	:	

This is a decision on the petition under 37 CFR 1.313(c)(2), filed, August 23, 2011 to withdraw the above-identified application from issue after payment of the issue fee.

The petition is **GRANTED**.

The above-identified application is withdrawn from issue for consideration of a submission under 37 CFR 1.114 (request for continued examination). *See* 37 CFR 1.313(c)(2).

Petitioner is advised that the issue fee paid on August 2, 2011 cannot be refunded. If, however, this application is again allowed, petitioner may request that it be applied towards the issue fee required by the new Notice of Allowance.[1]

Telephone inquiries should be directed to Terri Johnson at (571) 272-2991.

This application is being referred to Technology Center AU 1654 for processing of the request for continued examination under 37 CFR 1.114 and for consideration of the concurrently filed information disclosure statement.

/Terri Johnson/
Terri Johnson
Petitions Examiner
Office of Petitions

[1] *The request to apply the issue fee to the new Notice may be satisfied by completing and returning the new Part B – Fee(s) Transmittal Form (along with any balance due at the time of submission). Petitioner is advised that the Issue Fee Transmittal Form must be completed and timely submitted to avoid abandonment of the application.*

UNITED STATES PATENT AND TRADEMARK OFFICE

Commissioner for Patents
United States Patent and Trademark Office
P.O. Box 1450
Alexandria, VA 22313-1450
www.uspto.gov

SAMPSON & ASSOCIATES, P.C.
50 CONGRESS STREET
BOSTON MA 02109

MAILED

AUG 29 2011

OFFICE OF PETITIONS

In re Application of
Giorgio Jezek
Application No. 11/911,715
Filed: July 7, 2011
Attorney Docket No. 65-07

DECISION ON PETITION
TO MAKE SPECIAL UNDER
37 CFR 1.102(c)(1)

This is a decision on the petition under 37 CFR 1.102(c)(1), filed August 10, 2011, to make the above-identified application special based on applicant's age as set forth in M.P.E.P. § 708.02, Section IV.

The petition is **GRANTED**.

A grantable petition to make an application special under 37 CFR 1.102(c)(1) and MPEP § 708.02, Section IV: Applicant's Age must be accompanied by evidence showing that at least one of the applicants is 65 years of age, or more, such as a birth certificate or a statement by applicant. No fee is required

The instant petition includes a statement from the attorney of record declaring that he is in possession of such evidence that shows the applicant, Giorgio Jezek is 65 years of age or older. Accordingly, the above-identified application has been accorded "special" status.

Telephone inquiries concerning this decision should be directed to Terri Johnson at 571-272-2991.

All other inquiries concerning either the examination or status of the application should be directed to the Technology Center.

The application is being forwarded to the Technology Center Art Unit 3654 for action on the merits commensurate with this decision.

/Terri Johnson/
Terri Johnson
Petitions Examiner
Office of Petitions

SPE RESPONSE FOR CERTIFICATE OF CORRECTION

DATE : 1-10-12 **Paper No.:** _____

TO SPE OF : ART UNIT 12-2-11

SUBJECT : Request for Certificate of Correction for Appl. No.: 11/911,719 Patent No.: 8042505

CofC mailroom date: 12-2-11

Please respond to this request for a certificate of correction within 7 days.

FOR IFW FILES: Check Drawings

Please review the requested changes/corrections as shown in the **COCIN** document(s) in the IFW application image. No new matter should be introduced, nor should the scope or meaning of the claims be changed.

Please complete the response (see below) and forward the completed response to scanning using document code **COCX**.

FOR PAPER FILES:

Please review the requested changes/corrections as shown in the attached certificate of correction. Please complete this form (see below) and forward it with the file to:

Certificates of Correction Branch (CofC)
Randolph Square – 9D10-A
Palm Location 7580

E Yang
Certificates of Correction Branch
703-756-1814 _____

Thank You For Your Assistance

The request for issuing the above-identified correction(s) is hereby:
Note your decision on the appropriate box.

- [x] **Approved** — **All** changes apply.
- [ ] **Approved in Part** — Specify below which changes **do not** apply.
- [ ] **Denied** — State the reasons for denial below.

Comments: _____

Thomas Denion
THOMAS DENION
SUPERVISORY PATENT EXAMINER
TECHNOLOGY CENTER 3700
SPE

3748
Art Unit

PTO/SB/44 (04-05)
Approved for use through 04/30/2007. OMB 0651-0033
U.S. Patent and Trademark Office; U.S. DEPARTMENT OF COMMERCE
Under the Paperwork Reduction Act of 1995, no persons are required to respond to a collection of information unless it displays a valid OMB control number.
(Also Form PTO-1050)

UNITED STATES PATENT AND TRADEMARK OFFICE

CERTIFICATE OF CORRECTION

PATENT NO : 8,042,505 B2

APPLICATION NO. : 11/911,719

DATED : October 25, 2011

INVENTOR(S) : Eisenbeis

It is certified that error appears in the above-identified patent and that said Letters Patent are hereby corrected as shown below:

In the Drawings:

Sheet 1 of 17, please delete "Figur 1" and insert - -Fig.1- - therefor;

Sheet 4 of 17, please delete "Figur 3" and insert - -Fig.3- - therefor;

Sheet 4 of 17, please delete "Figur 4" and insert - -Fig.4- - therefor;

Sheet 5 of 17, please delete "Figur 4" and insert - -Fig. 4- - therefor;

Sheet 5 of 17, please delete "54a" and insert - -54a- - therefor;

Sheet 6 of 17, please delete "Figur 5" and insert - -Fig. 5- - therefor;

Sheet 7 of 17, please delete "Figur 6" and insert - -Fig. 6- - therefor;

Sheet 8 of 17, please delete "Figur 7" and insert - -Fig. 7- - therefor;

Sheet 9 of 17, please delete "Figur 8" and insert - -Fig. 8- - therefor;

Sheet 10 of 17, please delete "Figur 9" and insert - -Fig. 9- - therefor;

Sheet 11 of 17, please delete "Figur 10a" and insert - -Fig. 10a- - therefor;

Sheet 11 of 17, please delete "Figur 10b" and insert - -Fig. 10b- - therefor;

Sheet 12 of 17, please delete "Figur 10b" and insert - -Fig. 10b- - therefor;

Sheet 13 of 17, please delete "Figur 11" and insert - -Fig. 11- - therefor;

Sheet 14 of 17, please delete "Figur 12" and insert - -Fig. 12- - therefor;

Sheet 15 of 17, please delete "Figur 13a" and insert - -Fig. 13a- - therefor;

Sheet 15 of 17, please delete "Figur 13b" and insert - -Fig. 13b- - therefor;

Sheet 16 of 17, please delete "Figur 13b" and insert - -Fig. 13b- - therefor;

In Detailed Description of the Invention:

Column 9, Line 38, please delete "stern" and insert –stem—therefor.

should be
Fig. ~~[illegible]~~
Figur 4
2:1

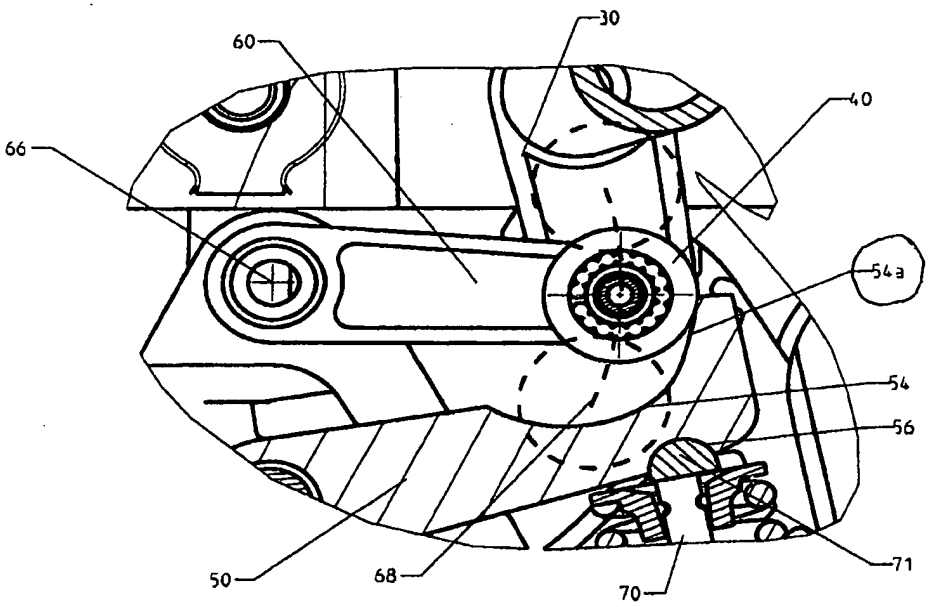

should be
54a

MAILING ADDRESS OF SENDER (Please do not use customer number below):
Keith M. Tackett
PATTERSON & SHERIDAN, LLP
3040 Post Oak Blvd, Ste 1500
Houston, TX 77056-6582
(713) 623-4844

This collection of information is required by 37 CFR 1.322, 1.323, and 1.324. The information is required to obtain or retain a benefit by the public which is to file (and by the USPTO to process) an application. Confidentiality is governed by 35 U.S.C. 122 and 37 CFR 1.14. This collection is estimated to take 1.0 hour to complete, including gathering, preparing, and submitting the completed application form to the USPTO. Time will vary depending upon the individual case. Any comments on the amount of time you require to complete this form and/or suggestions for reducing this burden, should be sent to the Chief Information Officer, U.S. Patent and Trademark Office, U.S. Department of Commerce, P.O. Box 1450, Alexandria, VA 22313-1450. DO NOT SEND FEES OR COMPLETED FORMS TO THIS ADDRESS. **SEND TO: Attention Certificate of Corrections Branch, Commissioner for Patents, P.O. Box 1450, Alexandria, VA 22313-1450.**

If you need assistance in completing the form, call 1-800-PTO-9199 and select option 2.

UNITED STATES PATENT AND TRADEMARK OFFICE

Commissioner for Patents
United States Patent and Trademark Office
P.O. Box 1450
Alexandria, VA 22313-1450
www.uspto.gov

PANITCH SCHWARZE BELISARIO & NADEL LLP
ONE COMMERCE SQUARE
2005 MARKET STREET, SUITE 2200
PHILADELPHIA PA 19103

MAILED

DEC 27 2010

OFFICE OF PETITIONS

In re Application of	:	
Harumi Kobayashi	:	
Application No. 11/911,740	:	DECISION GRANTING PETITION
Filed: October 17, 2007	:	UNDER 37 CFR 1.313(c)(2)
Attorney Docket No. 9369-137US T37-217223/AIO	:	

This is a decision on the petition under 37 CFR 1.313(c)(2), filed, December 23, 2010 to withdraw the above-identified application from issue after payment of the issue fee.

The petition is **GRANTED**.

The above-identified application is withdrawn from issue for consideration of a submission under 37 CFR 1.114 (request for continued examination). *See* 37 CFR 1.313(c)(2).

Petitioner is advised that the issue fee paid on December 14, 2010 cannot be refunded. If, however, this application is again allowed, petitioner may request that it be applied towards the issue fee required by the new Notice of Allowance.[1]

Telephone inquiries should be directed to Terri Johnson at (571) 272-2991.

This application is being referred to Technology Center AU 3655 for processing of the request for continued examination under 37 CFR 1.114 and for consideration of the concurrently filed information disclosure statement and amendment.

/Terri Johnson/
Terri Johnson
Petitions Examiner
Office of Petitions

---

[1] *The request to apply the issue fee to the new Notice may be satisfied by completing and returning the new Part B – Fee(s) Transmittal Form (along with any balance due at the time of submission). Petitioner is advised that the Issue Fee Transmittal Form must be completed and timely submitted to avoid abandonment of the application.*

SPE RESPONSE FOR CERTIFICATE OF CORRECTION

PAPER NO.:

DATE : 9/27/10

TO SPE OF : ART UNIT: 3724 Attn: ELEY TIMOTHY V

SUBJECT : Request for Certificate of Correction for Appl. No.: 11/911798 Patent No.: 7661419

Please respond to this request for a certificate of correction within 7 days.

FOR IFW FILES:

Please review the requested changes/corrections as shown in the **COCIN** document(s) in the IFW application image. No new matter should be introduced, nor should the scope or meaning of the claims be changed.
Please complete the response (see below) and forward the completed response to scanning using document code **COCX**.

FOR PAPER FILES:

Please review the requested changes/corrections as shown in the attached certificate of correction. Please complete this form (see below) and forward it with the file to:

Certificates of Correction Branch (CofC)
Randolph Square Building (RSQ)
2800 South Randolph Street, Suite 9XXXX
Arlington, VA 22206
PALM Location 7580

Tasneem Siddiqui

Certificates of Correction Branch
703-756-1593

Thank You for Your Assistance

The request for issuing the above-identified correction(s) is hereby:
Note your decision on the appropriate box.

- ☒ **Approved** — **All** changes apply.
- ☐ **Approved in Part** — Specify below which changes **do not** apply.
- ☐ **Denied** — State the reasons for denial below.

Comments: _____

SPE

3723
Art Unit

UNITED STATES PATENT AND TRADEMARK OFFICE

Commissioner for Patents
United States Patent and Trademark Office
P.O. Box 1450
Alexandria, VA 22313-1450
www.uspto.gov

WORKMAN NYDEGGER
1000 EAGLE GATE TOWER
60 EAST SOUTH TEMPLE
SALT LAKE CITY UT 84111

MAILED
JAN 3 1 2011
OFFICE OF PETITIONS

In re Application of Michael Ernest Saxby Application No. 11/911,799 Filed: March 26, 2008 Attorney Docket No. 15892.32	: : : : :	DECISION ON PETITION

This is a decision on the petition under the unintentional provisions of 37 CFR 1.137(b), filed January11, 2011, to revive the above-identified application.

The petition is **GRANTED**.

The application became abandoned for failure to reply in a timely manner to the non-final Office action mailed, February 12, 2009, which set a shortened statutory period for reply of three (3) months. No extensions of time under the provisions of 37 CFR 1.136(a) were obtained. Accordingly, the application became abandoned on May 13, 2009. A Notice of Abandonment was mailed August 17, 2009.

The petition satisfies the requirements of 37 CFR 1.137(b) in that petitioner has supplied (1) the reply in the form of an Amendment, (2) the petition fee of $1,620.00, and (3) a proper statement of unintentional delay.

Telephone inquiries concerning this decision should be directed to the undersigned at (571) 272-7751.

This application is being referred to Technology Center AU 3641 for further appropriate action by the Examiner in the normal course of business on the reply received.

Joan Olszewski

Joan Olszewski
Petitions Examiner
Office of Petitions

UNITED STATES PATENT AND TRADEMARK OFFICE

Commissioner for Patents
United States Patent and Trademark Office
P.O. Box 1450
Alexandria, VA 22313-1450
www.uspto.gov

Decision Date : September 19,2011

In re Application of :

DECISION ON PETITION

Kadiyali Srivatsa

Application No : 11911810

Filed : 20-May-2008

Attorney Docket No : 17438.1

This is an electronic decision on the petition under 37 CFR 1.137(b), filed September 19,2011 , to revive the above-identified application.

The petition is **GRANTED.**

The above-identified application became abandoned for failure to reply in a timely manner to an Office action. The date of abandonment is the day after the expiration date of the period set for reply in the office action or action plus any extensions of time actually obtained.
The electronic petition satisfies the requirements of 37 CFR 1.137(b) in that the practitioner has supplied (1) the reply in the form of a continuing application, (2) the petition fee under 37 CFR 1.17(m), (3) a proper statement of unintentional delay, and (4) any terminal disclaimer (and fee set forth in 37 CFR 1.20(d)) required pursuant to 37 CFR 1.137(c).

The above-identified application is being revived solely for purposes of continuity. As continuity has been established by this decision reviving the above-identified application, the above-identified application is again abandoned in favor of continuing application No. 13227265 filed on 09-07-2011

Telephone inquiries concerning this decision should be directed to the Patent Electronic Business Center (EBC) at 866-217-9197.

Office of Petitions

Doc Code: PET.AUTO Document Description: Petition automatically granted by EFS-Web	PTO/SB/64 U.S. Patent and Trademark Office Department of Commerce

Electronic Petition Request	**PETITION FOR REVIVAL OF AN APPLICATION FOR PATENT ABANDONED UNINTENTIONALLY UNDER 37 CFR 1.137(b)**
Application Number	11911810
Filing Date	20-May-2008
First Named Inventor	Kadiyali Srivatsa
Art Unit	3736
Examiner Name	CHARLES BECKER
Attorney Docket Number	17438.1
Title	Cannula with introducer, needle protecting guard and blood collecting system

The above-identified application became abandoned for failure to file a timely and proper reply to a notice or action by the United States Patent and Trademark Office. The date of abandonment is the day after the expiration date of the period set for reply in the office notice or action plus any extensions of time actually obtained.

APPLICANT HEREBY PETITIONS FOR REVIVAL OF THIS APPLICATION

NOTE: A grantable petition requires the following items:
1. Petition fee;
2. Reply and/or issue fee;
3. Terminal disclaimer with disclaimer fee – required for all utility and plant applications filed before June 8, 1995; and for all design applications;
4. Statement that the entire delay was unintentional.

Petition fee
The petition fee under 37CFR 1.17(m) is attached.

☐ Applicant claims SMALL ENTITY status. See 37 CFR 1.27.

☐ Applicant is no longer claiming SMALL ENTITY status. See 37 CFR 1.27(g)(2).

☒ Applicant(s) status remains as SMALL ENTITY.

☐ Applicant(s) status remains as other than SMALL ENTITY.

Reply Fee

☒ A reply in the form of a continuing application with serial number 13227265 has been previously filed on 09-07-2011

Terminal disclaimer with disclaimer fee

☐ Terminal disclaimer and fee are not required

☐ I certify, in accordance with 37 CFR 1.4(d)(4) that the terminal disclaimer and fee have already been filed in the above-identified application on

☒ Terminal disclaimer and fee are attached

☒ STATEMENT: The entire delay in filing the required reply from the due date for the required reply until the filing of a grantable petition under 37 CFR 1.137(b) was unintentional.

THIS PORTION MUST BE COMPLETED BY THE SIGNATORY OR SIGNATORIES

I certify, in accordance with 37 CFR 1.4(d)(4) that I am:

◉ An attorney or agent registered to practice before the Patent and Trademark Office who has been given power of attorney in this application.

○ An attorney or agent registered to practice before the Patent and Trademark Office, acting in a representative capacity.

○ A sole inventor

○ A joint inventor; I certify that I am authorized to sign this submission on behalf of all of the inventors.

○ A joint inventor; all of whom are signing this e-petition.

○ The assignee of record of the entire interest that has properly made itself of record pursuant to 37 CFR 3.71.

Signature	/John C. Stringham, 40831/
Name	John C. Stringham
Registration Number	40831

UNITED STATES PATENT AND TRADEMARK OFFICE

Commissioner for Patents
United States Patent and Trademark Office
P.O. Box 1450
Alexandria, VA 22313-1450
www.uspto.gov

SYNGENTA CROP PROTECTION , INC.
PATENT AND TRADEMARK DEPARTMENT
410 SWING ROAD
GREENSBORO NC 27409

MAILED

OCT 22 2010

OFFICE OF PETITIONS

In re Application of	:	
David Payne et al.	:	
Application No. 11/911,829	:	DECISION ON PETITION
Filed: October 18, 2007	:	
Attorney Docket No. 70645	:	

This is a decision on the petition under the unintentional provisions of 37 CFR 1.137(b), filed August 31, 2010, to revive the above-identified application.

The petition is **GRANTED**.

The application became abandoned for failure to reply in a timely manner to the non-final Office action mailed January 25, 2010, which set a shortened statutory period for reply of three (3) months. No extensions of time under the provisions of 37 CFR 1.136(a) were obtained. Accordingly, the application became abandoned on April 26, 2010. A Notice of Abandonment was mailed on August 30, 2010.

The petition satisfies the requirements of 37 CFR 1.137(b) in that petitioner has supplied (1) the reply in the form of an amendment, (2) the petition fee of $1,620 and (3) a proper statement of unintentional delay. Accordingly, the amendment is accepted as being unintentionally delayed.

Telephone inquiries concerning this decision should be directed to Kimberly Inabinet at (571) 272-4618.

This application is being referred to Technology Center AU 1661 for appropriate action by the Examiner in the normal course of business on the reply received August 31, 2010.

/Kimberly Inabinet/

Kimberly Inabinet
Petitions Examiner
Office of Petitions

UNITED STATES PATENT AND TRADEMARK OFFICE

Commissioner for Patents
United States Patent and Trademark Office
P.O. Box 1450
Alexandria, VA 22313-1450
www.uspto.gov

CHOATE, HALL & STEWART LLP
TWO INTERNATIONAL PLACE
BOSTON MA 02110

MAILED

SEP 26 2011

OFFICE OF PETITIONS

In re Application of

Frederyk Ngantung et al.
Application No. 11/911,878
Filed: August 7, 2008
Attorney Docket No. 0492611-0805

DECISION ON PETITION
TO WITHDRAW
FROM RECORD

This is a decision on the Request to Withdraw as attorney or agent of record under 37 C.F.R. § 1.36(b), filed September 14, 2011.

The request is **NOT APPROVED.**

The Office will no longer accept address changes to a new practitioner or law firm filed with a Request, absent the filing of a power of attorney to the new representative. The Office will either change the correspondence address of record to the most current address information provided for the assignee of the entire interest who properly became of record under 37 CFR 3.71 or, if no assignee of the entire interest has properly been made of record under 37 CFR 3.71, the most current address information provided for the first named inventor.

Accordingly, the request to withdraw from record cannot be approved because a forwarding address was not provided. The request to change the correspondence address should be that of the: (1) the first named inventor; or (2) an assignee of the entire interest under 37 C.F.R 3.71. If an assignee has intervened in this application then a Statement under 37 CFR 3.73(b), or a copy of the actual assignment must be submitted with a renewed request.

All future communications from the Office will continue to be directed to the above-identified address until otherwise properly notified.

Telephone inquiries concerning this decision should be directed to the undersigned at 571-272- 4618.

/Kimberly Inabinet/

Kimberly Inabinet
Petitions Examiner
Office of Petitions

UNITED STATES PATENT AND TRADEMARK OFFICE

Commissioner for Patents
United States Patent and Trademark Office
P.O. Box 1450
Alexandria, VA 22313-1450
www.uspto.gov

CHOATE, HALL & STEWART LLP
TWO INTERNATIONAL PLACE
BOSTON MA 02110

MAILED

OCT 06 2011

OFFICE OF PETITIONS

In re Application of	:	
Frederyk Ngantung et al.	:	
Application No. 11/911,878	:	DECISION ON PETITION
Filed: August 7, 2008	:	TO WITHDRAW
Attorney Docket No. 0492611-0805 (MIT11520)	:	FROM RECORD
	:	

This is a decision on the renewed Request to Withdraw as attorney or agent of record under 37 C.F.R. § 1.36(b), filed September 30, 2011.

The request is **APPROVED**.

A grantable request to withdraw as attorney/agent of record must be signed by every attorney/agent seeking to withdraw or contain a clear indication that one attorney is signing on behalf of another/others. A request to withdraw will not be approved unless at least 30 (thirty) days would remain between the date of approval and the later of the expiration date of a time to file a response or the expiration date of the maximum time period which can be extended under 37 C.F.R. § 1.136(a).

The request was signed by Brenda Herschbach Jarrell, Phd, JD on behalf of all attorneys/agents of record. All attorneys/agents have been withdrawn.

Applicant is reminded that there is no attorney of record at this time.

The correspondence address has been changed and is copied below.

Telephone inquiries concerning this decision should be directed to Kimberly Inabinet at 571-272-4618.

/Kimberly Inabinet/

Kimberly Inabinet
Petitions Examiner
Office of Petitions

cc: Massachusetts Institute of Technology
77 Massachusetts Avenue
Cambridge, MA 02139

UNITED STATES PATENT AND TRADEMARK OFFICE

UNITED STATES DEPARTMENT OF COMMERCE
United States Patent and Trademark Office
Address: COMMISSIONER FOR PATENTS
P.O. Box 1450
Alexandria, Virginia 22313-1450
www.uspto.gov

APPLICATION NUMBER	FILING OR 371(C) DATE	FIRST NAMED APPLICANT	ATTY. DOCKET NO./TITLE
11/911,878	08/07/2008	Frederyk Ngantung	0492611-0805 (MIT11520)

CONFIRMATION NO. 2588

POWER OF ATTORNEY NOTICE

24280
CHOATE, HALL & STEWART LLP
TWO INTERNATIONAL PLACE
BOSTON, MA 02110

OC000000050220539

Date Mailed: 10/05/2011

NOTICE REGARDING CHANGE OF POWER OF ATTORNEY

This is in response to the Power of Attorney filed 09/30/2011.

- The withdrawal as attorney in this application has been accepted. Future correspondence will be mailed to the new address of record. 37 CFR 1.33.

/kainabinet/

Office of Data Management, Application Assistance Unit (571) 272-4000, or (571) 272-4200, or 1-888-786-0101

SPE RESPONSE FOR CERTIFICATE OF CORRECTION

Paper No.:20120204

DATE : February 04, 2012

TO SPE OF : ART UNIT 1783

SUBJECT : Request for Certificate of Correction on Patent No.: 8071202

A response is requested with respect to the accompanying request for a certificate of correction.

Please complete this form and return with file, within **7** days to:
Certificates of Correction Branch - ST (South Tower) 9A22
Palm location **7590** - Tel. No. (703) 305-8309

With respect to the change(s) requested, correcting Office and/or Applicant's errors, should the patent read as shown in the certificate of correction? No new matter should be introduced, nor should the scope or meaning of the claims be changed.

Thank You For Your Assistance **Certificates of Correction Branch**

The request for issuing the above-identified correction(s) is hereby:

Note your decision on the appropriated box.

☒ **Approved** All changes apply.

☐ **Approved in Part** Specify below which changes **do not** apply.

☐ **Denied** State the reasons for denial below.

Comments:

/DAVID SAMPLE/
Supervisory Patent Examiner.Art Unit 1783

EAST Search History

EAST Search History (Prior Art)

Ref #	Hits	Search Query	DBs	Default Operator	Plurals	Time Stamp
S1	4782256	GB "2346602"	US-PGPUB; USPAT; USOCR; FPRS; EPO; JPO; DERWENT	OR	ON	2010/04/19 17:35
S2	388096	GB "2346602"	EPO	OR	ON	2010/04/19 17:36
S3	0	GB"2346602"	EPO	OR	ON	2010/04/19 17:36
S4	388096	GB "2346602"	EPO	OR	ON	2010/04/19 17:36
S5	1	"2346602"	EPO	OR	ON	2010/04/19 17:44
S6	0	"1481559"	EPO	OR	ON	2010/04/19 17:45
S7	0	"1481559"	EPO	OR	ON	2010/04/19 17:46
S8	6	"1481559"	EPO; DERWENT	OR	ON	2010/04/19 17:46
S9	2033	206/427	US-PGPUB; USPAT; USOCR; FPRS; EPO; JPO; DERWENT	OR	ON	2010/04/22 18:23
S10	0	2804234A	US-PGPUB; USPAT; USOCR; FPRS; EPO; JPO; DERWENT	OR	ON	2010/04/22 19:10
S11	40	"2804234"	US-PGPUB; USPAT; USOCR; FPRS; EPO; JPO; DERWENT	OR	ON	2010/04/22 19:10
S12	1	6691873B1	US-PGPUB; USPAT; USOCR; FPRS; EPO; JPO; DERWENT	OR	ON	2010/04/22 19:11
S13	0	2774467A	US-PGPUB; USPAT; USOCR; FPRS; EPO; JPO; DERWENT	OR	ON	2010/04/22 19:11
S14	8	"2774467"	US-PGPUB; USPAT; USOCR; FPRS; EPO; JPO; DERWENT	OR	ON	2010/04/22 19:12
S15	2	1084182A	US-PGPUB; USPAT; USOCR; FPRS; EPO; JPO; DERWENT	OR	ON	2010/04/22 19:12

S16	3	"0220367"	US-PGPUB; USPAT; USOCR; FPRS; EPO; JPO; DERWENT	OR	ON	2010/04/22 19:13
S17	3118	206/457	US-PGPUB; USPAT; USOCR; FPRS; EPO; JPO; DERWENT	OR	ON	2010/04/22 22:10
S18	1	"11912133"	US-PGPUB; USPAT; USOCR; FPRS; EPO; JPO; DERWENT	OR	ON	2010/04/22 22:12
S19	0	"11912133"	USPAT; USOCR; FPRS; EPO; JPO; DERWENT	OR	ON	2010/04/22 22:13
S20	1	6691873B1	US-PGPUB; USPAT; USOCR; FPRS; EPO; JPO; DERWENT	OR	ON	2010/04/22 22:24
S21	18	"5315174"	US-PGPUB; USPAT; USOCR; FPRS; EPO; JPO; DERWENT	OR	ON	2010/04/22 22:25
S22	0	"53151/74"	US-PGPUB; USPAT; USOCR; FPRS; EPO; JPO; DERWENT	OR	ON	2010/04/22 22:25
S23	2	"7343974"	US-PGPUB; USPAT; USOCR; FPRS; EPO; JPO; DERWENT	OR	ON	2010/04/22 22:26
S24	9	"1481559"	US-PGPUB; USPAT; USOCR; FPRS; EPO; JPO; DERWENT	OR	ON	2010/04/22 22:26
S25	3	D499020S	US-PGPUB; USPAT; USOCR; FPRS; EPO; JPO; DERWENT	OR	ON	2010/05/19 15:17

EAST Search History (Interference)

<This search history is empty>

12/3/2010 10:21:50 AM

UNITED STATES PATENT AND TRADEMARK OFFICE

Commissioner for Patents
United States Patent and Trademark Office
P.O. Box 1450
Alexandria, VA 22313-1450
www.uspto.gov

LEASON ELLIS LLP
81 MAIN STREET
SUITE 503
WHITE PLAINS, NY 10601

MAILED

SEP 22 2010

OFFICE OF PETITIONS

In re Application of	:	
John B. Buse et al.	:	
Application No. 11/912,171	:	ON PETITION
Filed: December 6, 2007	:	
Attorney Docket No.: **0289/1429-US1**	:	

This is a decision on the petition under 37 CFR 1.137(b), filed July 23, 2010, to revive the above-identified application.

The petition is **GRANTED**.

The application became abandoned for a failure to timely file a reply within the meaning of 37 CFR 1.113 to the final Office action of January 18, 2010. However, this decision precedes the mailing of a Notice of Abandonment.

The petition satisfies the requirements of 37 CFR 1.137(b) in that petitioner has supplied (1) the reply in the form of a Request for Continued Examination (RCE) under 37 CFR 1.114 and fee of $810; (2) the petition fee of $1,620; and (3) an adequate statement of unintentional delay[1].

This application is being referred to Technology Center AU 1657 for further processing in the normal course of business of the RCE in accordance with 37 CFR 1.114.

Telephone inquiries concerning this decision should be directed to the undersigned at (571) 272-3204. Inquiries relating to further prosecution should be directed to the Technology Center.

Sherry D. Brinkley
Petitions Examiner
Office of Petitions

[1] 37 CFR 1.137(b)(3) requires a statement that the entire delay in filing the required reply from the due date for the reply until the filing of a grantable petition pursuant to 37 CFR 1.137(b) was unintentional. Although the statement contained in the petition varies from the language required by 37 CFR 1.137(b)(3), the statement will be construed as the statement required by 37 CFR 1.137(b)(3). Petitioner must notify the Office if this is **not** a correct interpretation of the statement contained in the instant petition.

UNITED STATES PATENT AND TRADEMARK OFFICE

Commissioner for Patents
United States Patent and Trademark Office
P.O. Box 1450
Alexandria, VA 22313-1450
www.uspto.gov

SUGHRUE MION, PLLC
2100 PENNSYLVANIA AVENUE, N.W.
SUITE 800
WASHINGTON DC 20037

MAILED
MAR 14 2011
OFFICE OF PETITIONS

In re Application of
Pankai Bhatnagar et al
Application No. 11/912,204
Filed: October 22, 2007
Attorney Docket No. Q122145

DECISION ON PETITION

This is a decision on the petition under the unintentional provisions of 37 CFR 1.137(b), filed December 17, 2010, to revive the above-identified application.

The petition is **GRANTED**.

The petition satisfies the conditions for revival pursuant to the provisions of 37 CFR 1.137(b) in that (1) the reply in the form of an RCE and an amendment; (2) the petition fee; and (3) the required statement of unintentional delay have been received. Accordingly, the reply to the final Office action mailed March 12, 2010, is accepted as having been unintentionally delayed.

Telephone inquiries concerning this decision should be directed to the undersigned at (571) 272-3208.

This application is being referred to Technology Center AU 1628 for appropriate action by the Examiner in the normal course of business.

/KOC/
Karen Creasy
Petitions Examiner
Office of Petitions

UNITED STATES PATENT AND TRADEMARK OFFICE

Commissioner for Patents
United States Patent and Trademark Office
P.O. Box 1450
Alexandria, VA 22313-1450
www.uspto.gov

OBLON, SPIVAK, MCCLELLAND MAIER & NEUSTADT, L.L.P.
1940 DUKE STREET
ALEXANDRIA, VA 22314

MAILED

FEB 14 2011

OFFICE OF PETITIONS

In re Application of
Takayuki AOSHIMA, et *al.*
Application No. 11/912,212
Filed: November 17, 2008
Attorney Docket No. **316725USOPCT**

DECISION GRANTING PETITION
UNDER 37 CFR 1.313(c)(2)

This is a decision on the petition under 37 CFR 1.313(c)(2), filed February 11, 2011, to withdraw the above-identified application from issue after payment of the issue fee.

The petition is **GRANTED**.

The above-identified application is withdrawn from issue for consideration of a submission under 37 CFR 1.114 (request for continued examination). *See* 37 CFR 1.313(c)(2).

Petitioner is advised that the issue fee paid on December 29, 2010 cannot be refunded. If, however, this application is again allowed, petitioner may request that it be applied towards the issue fee required by the new Notice of Allowance.[1]

Telephone inquiries should be directed to the undersigned at (571) 272-7253.

This application is being referred to Technology Center AU 1796 for processing of the request for continued examination under 37 CFR 1.114 and for consideration of the concurrently filed information disclosure statement.

/Monica A. Graves/
Petitions Examiner, Office of Petitions

[1] *The request to apply the issue fee to the new Notice may be satisfied by completing and returning the new Part B – Fee(s) Transmittal Form (along with any balance due at the time of submission). Petitioner is advised that the Issue Fee Transmittal Form* ***must*** *be completed and timely submitted to avoid abandonment of the application.*

UNITED STATES PATENT AND TRADEMARK OFFICE

UNITED STATES DEPARTMENT OF COMMERCE
United States Patent and Trademark Office
Address: COMMISSIONER FOR PATENTS
P.O. Box 1450
Alexandria, Virginia 22313-1450
www.uspto.gov

APPLICATION NO.	FILING DATE	FIRST NAMED INVENTOR	ATTORNEY DOCKET NO.	CONFIRMATION NO.
11/912,260	10/08/2008	Kari Peltonen	JHN-30-594	6220

23117 7590 08/16/2011
NIXON & VANDERHYE, PC
901 NORTH GLEBE ROAD, 11TH FLOOR
ARLINGTON, VA 22203

EXAMINER
HALPERN, MARK

ART UNIT	PAPER NUMBER
1741	

MAIL DATE	DELIVERY MODE
08/16/2011	PAPER

Please find below and/or attached an Office communication concerning this application or proceeding.

The time period for reply, if any, is set in the attached communication.

UNITED STATES PATENT AND TRADEMARK OFFICE

Commissioner for Patents
United States Patent and Trademark Office
P.O. Box 1450
Alexandria, VA 22313-1450
www.uspto.gov

wk

Mailed:

AUG 16 2011

In re application of	:	
Peltonen et al.	:	DECISION ON
Serial No. 11/912,260	:	PETITION
Filed: October 8, 2008	:	

For: **AN APPARATUS FOR DISTRIBUTING A PULP FLOW**

This is a decision on the PETITION FILED UNDER 37 CFR 1.181 on June 1, 2011 to withdraw the Finality of the Office Action mailed February 23, 2011.

DECISION

A review of the record indicates that the application was allowed on June 29, 2011

Accordingly, the instant petition is **DISMISSED.**

/W. GARY JONES/
Director, Technology Center 1700
Chemical and Materials Engineering

Jeffry H. Nelson
NIXON & VANDERHYE, PC
901 NORTH GLEBE ROAD, 11TH FLOOR
ARLINGTON VA 22203

UNITED STATES PATENT AND TRADEMARK OFFICE

Commissioner for Patents
United States Patent and Trademark Office
P.O. Box 1450
Alexandria, VA 22313-1450
www.uspto.gov

Decision Date : July 22,2011

In re Application of :

Kyong Choi

Application No : 11912329

Filed : 23-Oct-2007

Attorney Docket No : 0005474.0027 (PF-E0129)

DECISION ON PETITION

UNDER CFR 1.137(b)

This is an electronic decision on the petition under 37 CFR 1.137(b), filed July 22,2011 , to revive the above-identified application.

The petition is **GRANTED.**

The above-identified application became abandoned for failure to reply in a timely manner to the Notice of Allowance and Issue Fee(s) Due. The date of abandonment is the day after the expiration date of the period set for reply in the Notice.

The electronic petition satisfies the conditions for revival pursuant to the provisions of 37 CFR 1.137(b) in that (1) the reply in the form of payment of the Issue Fee and the Publication Fee (if necessary); (2) the petition fee as set forth in 37 CFR 1.17 (m); (3) the drawing correction and/or other deficiencies (if necessary); and (4) the required statement of unintentional delay have been received. Accordingly, the Issue Fee payment is accepted as having been unintentionally delayed.

Telephone inquiries concerning this decision should be directed to the Patent Electronic Business Center (EBC) at 866-217-9197.

This application file is being directed to the Office of Data Management.

Office of Petitions

Doc Code: PET.AUTO Document Description: Petition automatically granted by EFS-Web	PTO/SB/64 U.S. Patent and Trademark Office Department of Commerce

Electronic Petition Request	PETITION FOR REVIVAL OF AN APPLICATION FOR PATENT ABANDONED UNINTENTIONALLY UNDER 37 CFR 1.137(b)
Application Number	11912329
Filing Date	23-Oct-2007
First Named Inventor	Kyong Choi
Art Unit	3694
Examiner Name	ELLA COLBERT
Attorney Docket Number	0005474.0027 (PF-E0129)
Title	SYSTEM OFFERING A DATA-SKIN BASED ON STANDARD SCHEMA AND THE METHOD

The above-identified application became abandoned for failure to file a timely and proper reply to a notice or action by the United States Patent and Trademark Office. The date of abandonment is the day after the expiration date of the period set for reply in the office notice or action plus any extensions of time actually obtained.

APPLICANT HEREBY PETITIONS FOR REVIVAL OF THIS APPLICATION

NOTE: A grantable petition requires the following items:
(1) Petition fee;
(2) Reply and/or issue fee;
(3) Terminal disclaimer with disclaimer fee – required for all utility and plant applications filed before June 8, 1995; and for all design applications;
(4) Statement that the entire delay was unintentional.

Petition fee
The petition fee under 37CFR 1.17(m) is attached.

☐ Applicant claims SMALL ENTITY status. See 37 CFR 1.27.

☐ Applicant is no longer claiming SMALL ENTITY status. See 37 CFR 1.27(g)(2).

☒ Applicant(s) status remains as SMALL ENTITY.

☐ Applicant(s) status remains as other than SMALL ENTITY.

Issue Fee and Publication Fee :

Issue Fee and Publication Fee are not due.

☒ Issue Fee Transmittal is attached

Drawing corrections and/ or other deficiencies.

- (●) Drawing corrections and/ or other deficiencies are not required
- ( ) I certify, in accordance with 37 CFR 1.4.(D)(4), that drawing corrections and/ or other deficiencies have previously been filed on
- ( ) Drawing corrections and/ or other deficiencies are attached.
- [x] STATEMENT: The entire delay in filing the required reply from the due date for the required reply until the filing of a grantable petition under 37 CFR 1.137(b) was unintentional.

THIS PORTION MUST BE COMPLETED BY THE SIGNATORY OR SIGNATORIES

I certify, in accordance with 37 CFR 1.4(d)(4) that I am:

- (●) An attorney or agent registered to practice before the Patent and Trademark Office who has been given power of attorney in this application.
- ( ) An attorney or agent registered to practice before the Patent and Trademark Office, acting in a representative capacity.
- ( ) A sole inventor
- ( ) A joint inventor; I certify that I am authorized to sign this submission on behalf of all of the inventors.
- ( ) A joint inventor; all of whom are signing this e-petition.
- ( ) The assignee of record of the entire interest that has properly made itself of record pursuant to 37 CFR 3.71.

Signature	/aks/
Name	Adam K. Sacharoff
Registration Number	43075

DAC
IFW

Doc Code: PET.AUTO Document Description: Petition automatically granted by EFS-Web	PTO/SB/64 U.S. Patent and Trademark Office Department of Commerce

Electronic Petition Request	PETITION FOR REVIVAL OF AN APPLICATION FOR PATENT ABANDONED UNINTENTIONALLY UNDER 37 CFR 1.137(b)
Application Number	11912329
Filing Date	23-Oct-2007
First Named Inventor	Kyong Choi
Art Unit	3694
Examiner Name	ELLA COLBERT
Attorney Docket Number	0005474.0027 (PF-E0129)
Title	SYSTEM OFFERING A DATA-SKIN BASED ON STANDARD SCHEMA AND THE METHOD

OPAP IAP5 JUL 2 2 2011 PATENT & TRADEMARK OFFICE

The above-identified application became abandoned for failure to file a timely and proper reply to a notice or action by the United States Patent and Trademark Office. The date of abandonment is the day after the expiration date of the period set for reply in the office notice or action plus any extensions of time actually obtained.

APPLICANT HEREBY PETITIONS FOR REVIVAL OF THIS APPLICATION

NOTE: A grantable petition requires the following items:
(1) Petition fee;
(2) Reply and/or issue fee;
(3) Terminal disclaimer with disclaimer fee – required for all utility and plant applications filed before June 8, 1995; and for all design applications;
(4) Statement that the entire delay was unintentional.

Petition fee
The petition fee under 37CFR 1.17(m) is attached.

☐ Applicant claims SMALL ENTITY status. See 37 CFR 1.27.

☐ Applicant is no longer claiming SMALL ENTITY status. See 37 CFR 1.27(g)(2).

☒ Applicant(s) status remains as SMALL ENTITY.

☐ Applicant(s) status remains as other than SMALL ENTITY.

Issue Fee and Publication Fee :

Issue Fee and Publication Fee are not due.

07/22/2011 INTEFSW 00010806 11912329
01 FC:2453 810.00 DA

☒ Issue Fee Transmittal is attached

Drawing corrections and/ or other deficiencies.

◉ Drawing corrections and/ or other deficiencies are not required

○ I certify, in accordance with 37 CFR 1.4.(D)(4), that drawing corrections and/ or other deficiencies have previously been filed on

○ Drawing corrections and/ or other deficiencies are attached.

☒ STATEMENT: The entire delay in filing the required reply from the due date for the required reply until the filing of a grantable petition under 37 CFR 1.137(b) was unintentional.

THIS PORTION MUST BE COMPLETED BY THE SIGNATORY OR SIGNATORIES

I certify, in accordance with 37 CFR 1.4(d)(4) that I am:

◉ An attorney or agent registered to practice before the Patent and Trademark Office who has been given power of attorney in this application.

○ An attorney or agent registered to practice before the Patent and Trademark Office, acting in a representative capacity.

○ A sole inventor

○ A joint inventor; I certify that I am authorized to sign this submission on behalf of all of the inventors.

○ A joint inventor; all of whom are signing this e-petition.

○ The assignee of record of the entire interest that has properly made itself of record pursuant to 37 CFR 3.71.

Signature	/aks/
Name	Adam K. Sacharoff
Registration Number	43075

UNITED STATES PATENT AND TRADEMARK OFFICE

Commissioner for Patents
United States Patent and Trademark Office
P.O. Box 1450
Alexandria, VA 22313-1450
www.uspto.gov

VOLPE AND KOENIG, P.C.
UNITED PLAZA
30 SOUTH 17TH STREET
PHILADELPHIA PA 19103

MAILED

NOV 17 2011

OFFICE OF PETITIONS

In re Application of	:	
LOHI, et al	:	
Application No. 11/912,359	:	ON PETITION
Filed: February 7, 2008	:	
Attorney Docket No. BER-PT017	:	

This is a decision on the petition under the unintentional provisions of 37 CFR 1.137(b), filed October 27, 2011, to revive the above-identified application.

The petition is **GRANTED**.

The application became abandoned for failure to timely file a reply within the meaning of 37 CFR 1.113 to the final Office action of March 21, 2011. The proposed reply required for consideration of a petition to revive must be a Notice of Appeal (and appeal fee required by 37 CFR 41.20(b)(2), an amendment that *prima facie* places the application in condition for allowance, a Request for Continued Examination and submission (37 CFR 1.114), or the filing of a continuing application under 37 CFR 1.53(b). See MPEP 711.03(c)(II)(A)(2). No extensions of time pursuant to the provisions of 37 CFR 1.136(a) were obtained. Accordingly, the date of abandonment of this application is June 22, 2011. Accordingly, a Notice of Abandonment was mailed on September 30, 2011.

The petition satisfies the requirements of 37 CFR 1.137(b) in that petitioner has supplied (1) the reply in the form of a Request for Continued Examination (RCE) and fee of $465, and the submission required by 37 CFR 1.114; (2) the petition fee of $930; and (3) a proper statement of unintentional delay.

An extension of time under 37 CFR 1.136 must be filed prior to the expiration of the maximum extendable period for reply. *See* In re Application of S., 8 USPQ2d 1630, 1631 (Comm'r Pats. 1988). Since the $2255 extension of time fee submitted with the petition on October 27, 2011,

was subsequent to the maximum extendable period for reply, petitioner may request a refund of this fee by writing to the following address: Mail Stop 16, Commissioner for Patents, P. O. Box 1450, Alexandria, VA 22313-1450. A copy of this decision should accompany petitioner's request.

Telephone inquiries concerning this decision should be directed to the undersigned at (571) 272-6735.

This application is being referred to Technology Center AU 2174 for processing of the RCE and for appropriate action by the Examiner in the normal course of business on the amendment submitted in accordance with 37 CFR 1.114.

/Diane Goodwyn/
Diane Goodwyn
Petitions Examiner
Office of Petitions

UNITED STATES PATENT AND TRADEMARK OFFICE

Commissioner for Patents
United States Patent and Trademark Office
P.O. Box 1450
Alexandria, VA 22313-1450
www.uspto.gov

LACKENBACH SIEGEL, LLP
LACKENBACH SIEGEL BUILDING
1 CHASE ROAD
SCARSDALE, NY 10583

MAILED

FEB 28 2011

OFFICE OF PETITIONS

In re Application of :
Marcus Hamilton Lloyd Douglas, et. al. :
Application No. 11/912,366 :
Filed: October 23, 2007 :
Attorney Docket No. BRYER.P006 :

NOTICE

This is a Notice regarding your request for acceptance of a fee deficiency submission under 37 CFR 1.28, filed on October 25, 2007.

The Office no longer investigates or rejects original or reissue applications under 37 CFR 1.56. 1098 Off. Gaz. Pat. Office 502 (January 3, 1989). Therefore, nothing in this Notice is intended to imply that an investigation was done.

Your fee deficiency submission under 37 CFR 1.28 is hereby **ACCEPTED**. Therefore, status as a small entity has been removed and any future fee(s) submitted must be paid at the large entity rate.

Inquiries related to this communication should be directed to the undersigned at (571) 272-3226.

Andrea Smith
Petitions Examiner
Office of Petitions

UNITED STATES PATENT AND TRADEMARK OF

Commissioner for Patents
United States Patent and Trademark Office
P.O. Box 1450
Alexandria, VA 22313-1450
www.uspto.gov

Frederic P. Zotos
28 Old Church Road
Cohasset, MA 02025

MAILED
APR 13 2011
OFFICE OF PETITIONS

In re Application of :
GOTTARDL Waldemar et al. :
Application No. 11/912,368 : DECISION ON PETITION
Filed: October 23, 2007 :
Attorney Docket No. NVB.001702US :

This is a decision on the petition under 37 CFR 1.183, filed August 17, 2010, requesting that "the requirement of signatures by all the applicants or owners of the application for papers giving or revoking a power of attorney in an application be waived in the above-identified patent application."

The petition is **DISMISSED**.

37 CFR 1.183 states:

> *In an extraordinary situation, when justice requires, any requirement of the regulations in this part which is not a requirement of the statutes may be suspended or waived by the Director or the Director's designee, sua sponte, or on petition of the interested party, subject to such other requirements as may be imposed. Any petition under this section must be accompanied by the petition fee set forth in § 1.17(f).*

37 CFR 1.32(b) states:

> *(b) A power of attorney must:*
> *(1) Be in writing;*
> *(2) Name one or more representatives in compliance with (c) of this section;*
> *(3) Give the representative power to act on behalf of the principal; and*
> *(4) Be signed by the applicant for patent (§ 1.41(b)) or the assignee of the entire interest of the applicant.*

MPEP §402.10 states:

> *Papers giving or revoking a power of attorney in an application generally require signature by all the applicants or owners of the application. Papers revoking a power of*

attorney in an application (or giving a power of attorney) will not be accepted by the Office when signed by less than all of the applicants or owners of the application unless they are accompanied by a petition under 37 CFR 1.36(a) and fee under 37 CFR 1.17(f) with a showing of sufficient cause (if revocation), or a petition under 37 CFR 1.183 and fee under 37 CFR 1.17(f) (if appointment) demonstrating the extraordinary situation where justice requires waiver of the requirement of 37 CFR 1.32(b)(4) that the applicant, or the assignee of the entire interest of the applicant sign the power of attorney. The petition should be directed to the Office of Petitions. The acceptance of such papers by petition under 37 CFR 1.36(a) or 1.183 will result in more than one attorney, agent, applicant, or owner prosecuting the application at the same time. Therefore, each of these parties must sign all subsequent replies submitted to the Office. See In re Goldstein, 16 USPQ2d 1963 (Dep. Assist. Comm'r Pat. 1988). ..... Upon accepting papers appointing and/or revoking a power of attorney that are signed by less than all of the applicants or owners, the Office will indicate to applicants who must sign subsequent replies. Dual correspondence will still not be permitted. Accordingly, when the acceptance of such papers results in an attorney or agent and at least one applicant or owner prosecuting the application, correspondence will be mailed to the attorney or agent. When the acceptance of such papers results in more than one attorney or agent prosecuting the application, the correspondence address will continue to be that of the attorney or agent first named in the application, unless all parties agree to a different correspondence address. Each attorney or agent signing subsequent papers must indicate whom he or she represents.

In the instant application, a 'Revocation of Power of Attorney with New Power of Attorney and Change of Correspondence Address' on form PTO/SB/82 (POA Form) was filed on August 17, 2010. There are three inventors listed on the instant application: Waldemar Gottardi, M.D, Andreas Neher, M.D. and Markus Nagl, M.D. It is stated in the instant petition that "[i]n the process of obtaining signatures of these inventors for revoking the current power of attorney and reappointing a new power of attorney, Applicants have not received any response from Andreas Neher despite of repeated attempts to contact Dr. Neher at his last known contact information." Petitioner contends that "the "unavailability" of Andreas Neher constitutes an extraordinary situation and requires a waiver of the requirement under 37 CFR 1.32 (b)(4)."

As initial matter, petitioner should note that while the POA form filed concurrently with the instant petition indicates a power of attorney to have been submitted therewith, Office records do not indicate receipt of any power of attorney with the POA form. The POA form only lists a change in correspondence address.

In order for a petition under 37 CFR 1.183 to be granted, petitioner must show (1) that this is an extraordinary situation where (2) justice requires waiver of the rules. In re Sivertz, 227 U.S.P.Q. 255, 256 (Comm'r Pat. 1985). As noted above, the papers filed August 17, 2010, lack a Power of Attorney submission. Accordingly, the requested waiver of the requirement under 37 CFR 1.32 (b)(4) is inapplicable and the petition is DISMISSED.

However, had a power of attorney been included with the instant petition, the request for the waiver of the requirement under 37 CFR 1.32 (b)(4) would have been dismissed as the instant petition lacks a showing that an extraordinary situation exists. In deciding if an extraordinary situation exists that requires a waiver of the rule, in a situation as here, where unavailability of an inventor to sign a document is alleged, the Office is guided by proof similar to that required when an applicant is unavailable or refuses to sign. The instant petition fails to demonstrate, with a documented showing, that a diligent effort was made to find or locate non-signing inventor Andreas Neher, such that the requirement under 37 CFR 1.32 (b)(4) can be waived. Where inability to find or locate a named inventor(s) is alleged, a statement of facts should be submitted that fully describes the exact facts which are relied on to establish that a *diligent effort* was made to locate the inventor. **The statements of facts must be signed, where at all possible, by a person having firsthand knowledge of the facts recited therein and should be accompanied by documentary evidence in support of the statement of facts.** It is important that any renewed petition contain statements of fact as opposed to conclusions. See MPEP § 409.03.

Power of Attorney

As noted above, there was no Power of Attorney filed August 17, 2010. Furthermore, as noted above, had a Power of attorney been included with the submission of August 17, 2010, such should not have been approved for entry as the associated request for waiver of the requirement under 37 CFR 1.32 (b)(4) stands dismissed. Accordingly, the Notices regarding Change of Power attorney mailed by the Office on November 22, 2010, are hereby withdrawn. A purported power of attorney was filed December 15, 2008 and was signed by all the inventors. While it revoked the power of attorney previously granted, it was not effective in giving power of attorney to Frederic P. Zotos (reg. No. 37974). It is being treated as a change of address request. Petitioner is reminded that there is no power of attorney in this application at the present time.

Correspondence Address of Record

Under 37 CFR 1.33(a)(2), where an executed oath or declaration under 37 CFR 1.63 has been filed by any of the inventors, the correspondence address may be changed by (A) a patent practitioner of record, (B) an assignee as provided for under 37 CFR 3.71(b), or (C) all of the applicants (37 CFR 1.41(b)) for patent, unless there is an assignee of the entire interest and such assignee has taken action in the application in accordance with 37 CFR 3.71. See 37 CFR 1.33(a)(2). In the instant application, a fully executed declaration was filed on October 23, 2007. Accordingly, as the correspondence address listed on the POA form filed August 17, 2010, represented a change in correspondence address, and as such a change was not made in accordance with 37 CFR 1.33(a)(2), the correspondence address of record has been reset to that included with the request filed December 15, 2008. A courtesy copy of this decision is being mailed to the person signing the petition. However, all future correspondence will be directed to the address currently of record until appropriate instructions are received. See MPEP § 601.03. A copy of the form PTO/SB/81 is attached hereto for use by the applicants if they desire to resubmit a power of attorney and/or request for a change in correspondence address.

Telephone inquiries concerning this decision should be directed to the undersigned at (571) 272-4914.

The application file is being referred to Technology Center AU 1629.

Ramesh Krishnamurthy
Petitions Examiner
Office of Petitions

Encl: Form PTO/SB/81

CC: Hamilton DeSanctis & Cha, LLP
3239 El Camino Real, Suite 220
Palo Alto CA 94306

UNITED STATES PATENT AND TRADEMARK OFFICE

Commissioner for Patents
United States Patent and Trademark Office
P.O. Box 1450
Alexandria, VA 22313-1450
www.uspto.gov

MAILED
MAY 26 2011
OFFICE OF PETITIONS

MARSHALL, GERSTEIN & BORUN LLP
233 SOUTH WACKER DRIVE
6300 WILLIS TOWER
CHICAGO IL 60606-6357

In re Application of	:	
Uttam Saha et al.	:	
Application No. 11/912,395	:	RESPONSE TO PETITION
Filed: November 11, 2008	:	
Attorney Docket No. 31138/40983A	:	

This is a response to the petition under 37 CFR 1.59(b), filed March 21 2011, to expunge information from the above identified application.

The petition is dismissed.

Petitioner requests that the proposed claim amendments, filed on September 27, 2010 for discussion with the examiner in an interview for the record, be expunged from the above identified application. The petition submits that this information, although submitted for purposes of discussion with the examiner, was not intended to be part of the public record for this application.

However, the petition is premature since prosecution of the application has not been closed by way of the allowance of the application, the mailing of an Ex parte Quayle action, or the abandonment of the application. See MPEP 724.06. Accordingly, it is not appropriate to make a final determination of whether or not the material requested to be expunged is "material," with "materiality" being defined as any information which the examiner considers as being important to a determination of patentability of the claims. This includes information considered by the examiner during the course of prosecuting the application. Thus, the decision on the petition to expunge must be dismissed at this time.

During prosecution on the merits, the examiner will determine whether or not the identified document is considered to be "material." If the information is not considered by the examiner to be material and the conditions related to the expungement of unintentionally submitted information, discussed as A-F in MPEP 724.05 II, are satisfied, the information will be removed from the official file.

After the mailing of a Notice of Allowance, an Ex parte Quayle action or a Notice of Abandonment, the petition to expunge may be renewed by applicants or applicants' representative. No further fee is required for such a second submission of a petition under 37

CFR 1.59 to expunge information. **In addition, the requester is cautioned to renew the petition under 37 CFR 1.59 for reconsideration by the Office prior to the point at which the present file, or file claiming priority to the present file, is forwarded for issuance of the patent. This is to be done no later than immediately after the examiner has issued a Notice of Allowance, an Ex parte Quayle action or a Notice of Abandonment. A failure to timely renew the petition to expunge prior to the point at which the file is forwarded for issuance will result in the material being retained in the patented file and thus becoming open to the public.**

Telephone inquiries concerning this communication should be directed to the undersigned at (571) 272-6692.

Christopher Bottorff
Petitions Examiner
Office of Petitions

UNITED STATES PATENT AND TRADEMARK OFFICE

Commissioner for Patents
United States Patent and Trademark Office
P.O. Box 1450
Alexandria, VA 22313-1450
www.uspto.gov

HUNTON & WILLIAMS LLP
INTELLECTUAL PROPERTY DEPARTMENT
2200 Pennsylvania Avenue, N.W.
WASHINGTON DC 20037

MAILED
JAN 13 2012
OFFICE OF PETITIONS

In re Application of	:	
Randolph J. Noelle, et al.	:	
Application No. 11/912,397	:	DECISION GRANTING PETITION
Filed: June 4, 2008	:	UNDER 37 CFR 1.313(c)(2)
Attorney Docket No. 76799.000101	:	

This is a decision on the petition under 37 CFR 1.313(c)(2), filed, January 11, 2012 to withdraw the above-identified application from issue after payment of the issue fee.

The petition is **GRANTED**.

The above-identified application is withdrawn from issue for consideration of a submission under 37 CFR 1.114 (request for continued examination). *See* 37 CFR 1.313(c)(2).

Petitioner is advised that the issue fee paid on December 13, 2011 cannot be refunded. If, however, this application is again allowed, petitioner may request that it be applied towards the issue fee required by the new Notice of Allowance.[1]

Telephone inquiries should be directed to Terri Johnson at (571) 272-2991.

This application is being referred to Technology Center AU 1644 for processing of the request for continued examination under 37 CFR 1.114 and for consideration of the concurrently filed information disclosure statement.

/Terri Johnson/
Terri Johnson
Petitions Examiner
Office of Petitions

---

[1] *The request to apply the issue fee to the new Notice may be satisfied by completing and returning the new Part B – Fee(s) Transmittal Form (along with any balance due at the time of submission). Petitioner is advised that the Issue Fee Transmittal Form must be completed and timely submitted to avoid abandonment of the application.*

1 6 AUG 2010

United States Patent and Trademark Office

Commissioner for Patents
United States Patent and Trademark Office
P.O. Box 1450
Alexandria, VA 22313-1450
www.uspto.gov

MICHAEL BEST & FRIEDRICH LLP
100 EAST WISCONSIN AVENUE
MILWAUKEE WI 53202

In re Application of	:	
Wilms et al.	:	
Application No.: 11/912,416	:	DECISION
PCT No.: PCT/EP2006/060795	:	
Int. Filing Date: 16 March 2006	:	ON
Priority Date: 28 April 2005	:	
Attorney Docket No.: 022862-1135-US00	:	PETITION
For: Wiper Blade	:	

This is in response to the renewed petition under 37 CFR 1.47(a) filed on 30 June 2010.

DISCUSSION

In a Decision mailed on 30 April 2010, the renewed petition under 37 CFR 1.47(a) filed on 25 February 2010 was dismissed, without prejudice, because requirement (2) had not been satisfied.

In response, petitioner has provided new statements by Christian Wilms and Rudi Kisselmann, along with copies of relevant search results. Based on the totality of the evidence now of record, it would be appropriate to conclude that requirement (2) has been satisfied. As such, all of the requirements for relief under 37 CFR 1.47(a) have been met.

DECISION

The petition under 37 CFR 1.47(a) is **GRANTED**,.

As provided in 37 CFR 1.47(a), a notice of the filing of this application will be forwarded to the non-signing inventors at their last known addresses of record.

A notice of the filing of the application under 37 CFR 1.47(a) will be published in the Official Gazette.

This application is being returned to the Office of Patent Application Processing. Its date under 35 U.S.C. 371(c)(1), (2) and (4) is **28 August 2008**.

/George Dombroske/
George Dombroske
PCT Legal Examiner
Office of PCT Legal Administration
Tel: (571) 272-3283

16 AUG 2010

United States Patent and Trademark Office

Commissioner for Patents
United States Patent and Trademark Office
P.O. Box 1450
Alexandria, VA 22313-1450
www.uspto.gov

Dave Claes
Postweg 29
3150 Tildonk
BELGIUM

In re Application of
Wilms et al.
Application No.: 11/912,416
PCT No.: PCT/EP2006/060795
Int. Filing Date: 16 March 2006
Priority Date: 28 April 2005
Attorney Docket No.: 022862-1135-US00
For: Wiper Blade

Dear Mr. Claes:

You are named as a joint inventor in the above identified United States patent application, filed under the provisions of 35 U.S.C. 116 (United States Code), and 37 CFR 1.47(a), Rules of Practice in Patent Cases. Should a patent be granted on the application you will be designated therein as a joint inventor.

As a named inventor you are entitled to inspect any paper in the file wrapper of the application, order copies of all or any part thereof (at a prepaid cost per 37 CFR 1.19) or make your position of record in the application. Alternatively, you may arrange to do any of the preceding through a registered patent attorney or agent presenting written authorization from you. If you care to join the application, counsel of record (see below) would presumably assist you. Joining in the application would entail the filing of an appropriate oath or declaration by you pursuant to 37 CFR 1.63.

Telephone inquiries regarding this communication should be directed to the undersigned at (571) 272-3283. Requests for information regarding your application should be directed to the File Information Unit at (703) 308-2733. Requests for information regarding how to pay for and order a copy of the application, or a specific paper in the application, should be directed to Certification Division at (703) 308-9726 or 1(800) 972-6382 (outside the Washington D.C. area).

Any further correspondence with respect to this matter may be filed electronically via EFS-Web selecting the document description "Petition for review and processing by the PCT Legal Office" or by mail addressed to Mail Stop PCT, Commissioner for Patents, Office of PCT Legal Administration, P.O. Box 1450, Alexandria, Virginia 22313-1450, with the contents of the letter marked to the attention of the Office of PCT Legal Administration.

/George Dombroske/
George Dombroske
PCT Legal Examiner
Office of PCT Legal Administration
Tel: (571) 272-3283

MICHAEL BEST & FRIEDRICH LLP
100 EAST WISCONSIN AVENUE
MILWAUKEE WI 53202

1 6 AUG 2010

United States Patent and Trademark Office

Commissioner for Patents
United States Patent and Trademark Office
P.O. Box 1450
Alexandria, VA 22313-1450
www.uspto.gov

Erik Kinnaert
Liefdestraat 53 bus II
3700 Tienen
BELGIUM

In re Application of
Wilms et al.
Application No.: 11/912,416
PCT No.: PCT/EP2006/060795
Int. Filing Date: 16 March 2006
Priority Date: 28 April 2005
Attorney Docket No.: 022862-1135-US00
For: Wiper Blade

Dear Mr. Kinnaert:

You are named as a joint inventor in the above identified United States patent application, filed under the provisions of 35 U.S.C. 116 (United States Code), and 37 CFR 1.47(a), Rules of Practice in Patent Cases. Should a patent be granted on the application you will be designated therein as a joint inventor.

As a named inventor you are entitled to inspect any paper in the file wrapper of the application, order copies of all or any part thereof (at a prepaid cost per 37 CFR 1.19) or make your position of record in the application. Alternatively, you may arrange to do any of the preceding through a registered patent attorney or agent presenting written authorization from you. If you care to join the application, counsel of record (see below) would presumably assist you. Joining in the application would entail the filing of an appropriate oath or declaration by you pursuant to 37 CFR 1.63.

Telephone inquiries regarding this communication should be directed to the undersigned at (571) 272-3283. Requests for information regarding your application should be directed to the File Information Unit at (703) 308-2733. Requests for information regarding how to pay for and order a copy of the application, or a specific paper in the application, should be directed to Certification Division at (703) 308-9726 or 1(800) 972-6382 (outside the Washington D.C. area).

Any further correspondence with respect to this matter may be filed electronically via EFS-Web selecting the document description "Petition for review and processing by the PCT Legal Office" or by mail addressed to Mail Stop PCT, Commissioner for Patents, Office of PCT Legal Administration, P.O. Box 1450, Alexandria, Virginia 22313-1450, with the contents of the letter marked to the attention of the Office of PCT Legal Administration.

/George Dombroske/
George Dombroske
PCT Legal Examiner
Office of PCT Legal Administration
Tel: (571) 272-3283

MICHAEL BEST & FRIEDRICH LLP
100 EAST WISCONSIN AVENUE
MILWAUKEE WI 53202

United States Patent and Trademark Office

Commissioner for Patents
United States Patent and Trademark Office
P.O. Box 1450
Alexandria, VA 22313-1450
www.uspto.gov

OFFICIAL GAZETTE NOTICE

37 CFR 1.47 Notice by Publication

Notice is hereby given of the filing of an application with a petition under 37 CFR 1.47 requesting acceptance of the application without the signatures of joint inventors. The petition has been granted. A notice has been sent to the last known address of each non-signing inventor. The inventors whose signatures are missing (Erik KINNAERT and Dave CLAES) may join in the application by promptly filing an appropriate oath or declaration complying with 37 CFR 1.63. The international application number is PCT/EP2006/060795 and was filed on March 16, 2006 in the names of Christian WILMS, Eric WINDMOLDERS, Erik KINNAERT and Dave CLAES for the invention entitled WIPER BLADE. The national stage application number is 11/912,416 and has a 35 U.S.C. 371(c)(1), (2) and (4) date of August 28, 2008.

25 AUG 2010

UNITED STATES PATENT AND TRADEMARK OFFICE

Commissioner for Patents
United States Patent and Trademark Office
P.O. Box 1450
Alexandria, VA 22313-1450
www.uspto.gov

Saliwanchik Lloyd & Saliwanchik
A Professional Association
PO Box 142950
Gainesville, FL 32614

In re Application of POWER et al. Application No.: 11/912,432 PCT No.: PCT/EP2006/061710 Int. Filing Date: 20 April 2006 Priority Date: 26 April 2005 Attorney Docket No.: SER.LS.100 For: REATMENT AND/OR PREVENTION OF CANCER AND/OR ARTHRITIS	:	DECISION ON PETITION UNDER 37 CFR 1.78(a)(3)

This decision is in response to applicant's "Renewed Petition to Accept an Unintentionally Delayed Claimed of Priority" under 37 CFR 1.78(a)(3) dated July 23, 2010, to accept an unintentionally delayed claim under 35 U.S.C. §120 and 365(c) for the benefit of priority to the prior-filed international application (PCT/GB2004/004544) set forth in the application data sheet and amendment to the specification filed concurrently with the instant petition.

The petition is **GRANTED**.

The present nonprovisional application was filed after November 29, 2000, and the claim herein for the benefit of priority to the prior-filed international application is submitted after expiration of the period specified in 37 CFR 1.78(a)(2)(ii). Therefore, this is a proper petition under 37 CFR 1.78(a)(3).

A petition for acceptance of a claim for late priority under 37 CFR §§ 1.78(a)(3) is only applicable to those applications filed on or after November 29, 2000. Further, the petition is appropriate only after the expiration of the period specified in 37 CFR §§ 1.78(a)(2)(ii) and 1.78(a)(5)(ii). In addition, the petition under 37 CFR §§ 1.78(a)(3) and 1.78(a)(6) must be accompanied by:

(1) the reference required by 35 U.S.C. §§ 120 and 37 CFR §§ 1.78(a)(2)(i) of the prior-filed application, unless previously submitted;
(2) the surcharge set forth in § 1.17(t); and
(3) a statement that the entire delay between the date the claim was due under 37 CFR §§ 1.78(a)(2)(ii) and the date the claim was filed was unintentional. The Director may require

additional where there is a question whether the delay was unintentional.

The petition complies with the requirements for a grantable petition under 37 CFR 1.78(a)(3) in that (1) a reference to the prior-filed international application has been included in an amendment and supplemental ADS filed with present petition, as provided by 37 CFR 1.78(a)(2)(iii); (2) the surcharge fee required by 37 CFR 1.17(t) has been submitted; and (3) the petition contains a proper statement of unintentional delay. Accordingly, having found that the instant petition for acceptance of an unintentionally delayed claim for the benefit of priority under 35 U.S.C. § 120 to the prior-filed international application satisfies the conditions of 37 CFR 1.78(a)(3), the petition is granted.

The granting of the petition to accept the delayed benefit claim to the prior-filed applications under 37 CFR 1.78(a)(3) should not be construed as meaning that this application is entitled to the benefit of the prior-filed application. In order for this application to be entitled to the benefit of the prior-filed application, all other requirements under 35 U.S.C. § 120 and 37 CFR 1.78(a)(1) and (a)(2) must be met. Similarly, the fact that the corrected Filing Receipt accompanying this decision on petition includes the prior-filed application should not be construed as meaning that applicant is entitled to the claim for benefit of priority to the prior-filed application noted thereon. Accordingly, the examiner will, in due course, consider this benefit claim and determine whether this application is entitled to the benefit of the earlier filing date.

A corrected Filing Receipt, which includes the benefit claim to the prior-filed international application, accompanies this decision on petition.

Any inquiries concerning this decision may be directed to Anthony Smith, Attorney Advisor, at (571) 272-3298. All other inquiries concerning either the examination procedures or status of the application should be directed to the Technology Center.

This matter is being referred to Technology Center Art Unit 1643 for appropriate action on the amendment filed July 23, 2010, including consideration by the examiner of applicant's entitlement to claim benefit of priority under 35 U.S.C. § 120 to the prior-filed international application.

Boris Milef
PCT Legal Examiner
Office of PCT Legal Administration

UNITED STATES PATENT AND TRADEMARK OFFICE

UNITED STATES DEPARTMENT OF COMMERCE
United States Patent and Trademark Office
Address: COMMISSIONER FOR PATENTS
PO Box 1450
Alexandria, Virginia 22313-1450
www.uspto.gov

APPLICATION NUMBER	FILING or 371(c) DATE	GRP ART UNIT	FIL FEE REC'D	ATTY.DOCKET.NO	TOT CLAIMS	IND CLAIMS
11/912,432	10/24/2007	1643	1130	SER.LS.100	24	2

CONFIRMATION NO. 8854

CORRECTED FILING RECEIPT

23557
SALIWANCHIK LLOYD & SALIWANCHIK
A PROFESSIONAL ASSOCIATION
PO Box 142950
GAINESVILLE, FL 32614

OC000000043032924

Date Mailed: 08/24/2010

Receipt is acknowledged of this non-provisional patent application. The application will be taken up for examination in due course. Applicant will be notified as to the results of the examination. Any correspondence concerning the application must include the following identification information: the U.S. APPLICATION NUMBER, FILING DATE, NAME OF APPLICANT, and TITLE OF INVENTION. Fees transmitted by check or draft are subject to collection. Please verify the accuracy of the data presented on this receipt. **If an error is noted on this Filing Receipt, please submit a written request for a Filing Receipt Correction. Please provide a copy of this Filing Receipt with the changes noted thereon. If you received a "Notice to File Missing Parts" for this application, please submit any corrections to this Filing Receipt with your reply to the Notice. When the USPTO processes the reply to the Notice, the USPTO will generate another Filing Receipt incorporating the requested corrections**

Applicant(s)

Christine Power, Thoiry, FRANCE;
Melanie Yorke-Smith, Confignon, UNITED KINGDOM;

Assignment For Published Patent Application

Laboratoires Serono SA, Coinsins , Vaud, SWITZERLAND

Power of Attorney: The patent practitioners associated with Customer Number 23557

Domestic Priority data as claimed by applicant

This application is a 371 of PCT/EP2006/061710 04/20/2006
which claims benefit of 60/681,731 05/17/2005
and is a CIP of PCT/GB2004/004544 10/27/2004

Foreign Applications

EUROPEAN PATENT OFFICE (EPO) 05103402.3 04/26/2005

If Required, Foreign Filing License Granted: 10/27/2008

The country code and number of your priority application, to be used for filing abroad under the Paris Convention, is **US 11/912,432**

Projected Publication Date: Not Applicable

Non-Publication Request: No

Early Publication Request: No

Title

TREATMENT AND/OR PREVENTION OF CANCER AND/OR ARTHRITIS

Preliminary Class

514

PROTECTING YOUR INVENTION OUTSIDE THE UNITED STATES

Since the rights granted by a U.S. patent extend only throughout the territory of the United States and have no effect in a foreign country, an inventor who wishes patent protection in another country must apply for a patent in a specific country or in regional patent offices. Applicants may wish to consider the filing of an international application under the Patent Cooperation Treaty (PCT). An international (PCT) application generally has the same effect as a regular national patent application in each PCT-member country. The PCT process **simplifies** the filing of patent applications on the same invention in member countries, but **does not result** in a grant of "an international patent" and does not eliminate the need of applicants to file additional documents and fees in countries where patent protection is desired.

Almost every country has its own patent law, and a person desiring a patent in a particular country must make an application for patent in that country in accordance with its particular laws. Since the laws of many countries differ in various respects from the patent law of the United States, applicants are advised to seek guidance from specific foreign countries to ensure that patent rights are not lost prematurely.

Applicants also are advised that in the case of inventions made in the United States, the Director of the USPTO must issue a license before applicants can apply for a patent in a foreign country. The filing of a U.S. patent application serves as a request for a foreign filing license. The application's filing receipt contains further information and guidance as to the status of applicant's license for foreign filing.

Applicants may wish to consult the USPTO booklet, "General Information Concerning Patents" (specifically, the section entitled "Treaties and Foreign Patents") for more information on timeframes and deadlines for filing foreign patent applications. The guide is available either by contacting the USPTO Contact Center at 800-786-9199, or it can be viewed on the USPTO website at http://www.uspto.gov/web/offices/pac/doc/general/index.html.

For information on preventing theft of your intellectual property (patents, trademarks and copyrights), you may wish to consult the U.S. Government website, http://www.stopfakes.gov. Part of a Department of Commerce initiative, this website includes self-help "toolkits" giving innovators guidance on how to protect intellectual property in specific countries such as China, Korea and Mexico. For questions regarding patent enforcement issues, applicants may call the U.S. Government hotline at 1-866-999-HALT (1-866-999-4158).

LICENSE FOR FOREIGN FILING UNDER

Title 35, United States Code, Section 184

Title 37, Code of Federal Regulations, 5.11 & 5.15

GRANTED

The applicant has been granted a license under 35 U.S.C. 184, if the phrase "IF REQUIRED, FOREIGN FILING LICENSE GRANTED" followed by a date appears on this form. Such licenses are issued in all applications where the conditions for issuance of a license have been met, regardless of whether or not a license may be required as

set forth in 37 CFR 5.15. The scope and limitations of this license are set forth in 37 CFR 5.15(a) unless an earlier license has been issued under 37 CFR 5.15(b). The license is subject to revocation upon written notification. The date indicated is the effective date of the license, unless an earlier license of similar scope has been granted under 37 CFR 5.13 or 5.14.

This license is to be retained by the licensee and may be used at any time on or after the effective date thereof unless it is revoked. This license is automatically transferred to any related applications(s) filed under 37 CFR 1.53(d). This license is not retroactive.

The grant of a license does not in any way lessen the responsibility of a licensee for the security of the subject matter as imposed by any Government contract or the provisions of existing laws relating to espionage and the national security or the export of technical data. Licensees should apprise themselves of current regulations especially with respect to certain countries, of other agencies, particularly the Office of Defense Trade Controls, Department of State (with respect to Arms, Munitions and Implements of War (22 CFR 121-128)); the Bureau of Industry and Security, Department of Commerce (15 CFR parts 730-774); the Office of Foreign AssetsControl, Department of Treasury (31 CFR Parts 500+) and the Department of Energy.

NOT GRANTED

No license under 35 U.S.C. 184 has been granted at this time, if the phrase "IF REQUIRED, FOREIGN FILING LICENSE GRANTED" DOES NOT appear on this form. Applicant may still petition for a license under 37 CFR 5.12, if a license is desired before the expiration of 6 months from the filing date of the application. If 6 months has lapsed from the filing date of this application and the licensee has not received any indication of a secrecy order under 35 U.S.C. 181, the licensee may foreign file the application pursuant to 37 CFR 5.15(b).

UNITED STATES PATENT AND TRADEMARK OFFICE

UNITED STATES DEPARTMENT OF COMMERCE
United States Patent and Trademark Office
Address: COMMISSIONER FOR PATENTS
P.O. Box 1450
Alexandria, Virginia 22313-1450
www.uspto.gov

APPLICATION NO.	FILING DATE	FIRST NAMED INVENTOR	ATTORNEY DOCKET NO.	CONFIRMATION NO.
11/912,462	10/24/2007	Timo Heinrich	MERCK-3383	9212

23599 7590 10/05/2011
MILLEN, WHITE, ZELANO & BRANIGAN, P.C.
2200 CLARENDON BLVD.
SUITE 1400
ARLINGTON, VA 22201

EXAMINER
MORRIS, PATRICIA L

ART UNIT	PAPER NUMBER
1625	

NOTIFICATION DATE	DELIVERY MODE
10/05/2011	ELECTRONIC

Please find below and/or attached an Office communication concerning this application or proceeding.

The time period for reply, if any, is set in the attached communication.

Notice of the Office communication was sent electronically on above-indicated "Notification Date" to the following e-mail address(es):

docketing@mwzb.com

United States Patent and Trademark Office

Commissioner for Patents
United States Patent and Trademark Office
P.O. Box 1450
Alexandria, VA 22313-1450
www.uspto.gov

OCT 0 5 2011

Csaba Hunter
MILLEN, WHITE, ZELANO & BRANIGAN, P.C.
2200 CLARENDON BLVD.
SUITE 1400
ARLINGTON VA 22201

In re Application of	:
Heinrich et al	:Decision on Petition
Serial No.: 11/912,462	:
Filed : 24 October 2007	:
Attorney Docket No.: MERCK-3383	:

This letter is in response to the Petition under 37 C.F.R. 1.144 filed on 17 August 2011 requesting reconsideration of the restriction requirement mailed 3 November 2010.

BACKGROUND

This application was filed as a national stage application in compliance with 35 U.S.C. 371 and as such is entitled to consideration under PCT Unity of Invention rules.

On 3 November 2010, the examiner set forth a restriction requirement which divided the claims into ten groups and required a further election of species.

On 22 November 2010, applicants elected Group III, drawn to products with traverse. Applicants also elected the compound of (3-fluoro-phenyl)-[2[(3, 4, 5-trimethoxy-phenyl)-1H-pyrriolol[2,3-b]pyridine-4-yl]amine.

On 11 January 2011, the examiner mailed to applicants a non-final Office action in which the traversal was considered, and the requirement was made final. Claims 5, 6 and 8-18 were withdrawn from consideration under 37 CFR 1.142(b) as being directed to non-elected subject matter. Claims 1-4 and 7 were rejected under 35 U.S.C. 112, 1st paragraph as failing to comply with the written description requirement and for scope of enablement and under 35 U.S.C. 112, 2nd paragraph for indefiniteness. Claims 1-4 and 7 were indicated as allowable, if re-written to

overcome the rejections made under 35 U.S.C. 112 and to be directed solely to the elected compounds.

On 10 June 2011, the examiner mailed to applicants a final Office action. Claims 5, 6, 8-14 and 16-18 were withdrawn from consideration under 37 CFR 1.142(b) as being directed to non-elected subject matter. Claims 1-4, 7 and 19-22 were examined on the merits. Claims 1 and 21 were rejected under 35 U.S.C. 112, 1st paragraph as failing to comply with the written description requirement and for scope of enablement and under 35 U.S.C. 112, 2nd paragraph for indefiniteness. Claims 1-4 and 7 were indicated as allowable, if re-written to overcome the rejections made under 35 U.S.C. 112 and to be directed solely to the elected compounds. Claim 22 was objected to for being dependent upon a rejected base claim but would be allowable if rewritten in independent form. Claims 2-4, 19 and 20 were objected to as being dependent upon a rejected base claims but would be allowable, if re-written in independent form and be directed solely to the elected compounds.

On 17 August 2011, applicants filed a response to the Office action along with this petition.

DISCUSSION

The file history and petition have been considered carefully.

At the onset, it is noted that no claims have been associated with the various Groups I-VII. This is counter to MPEP 814, which requires that the examiner indicate exactly how the application is to be restricted.

> "The examiner must provide a clear and detailed record of the restriction requirement to provide a clear demarcation between restricted inventions so that it can be determined whether inventions claimed in a continuing application are consonant with the restriction requirement and therefore subject to the prohibition against double patenting rejections under 35 U.S.C. 121. Geneva Pharms. Inc. v. GlaxoSmithKline PLC, 349 F.3d 1373, 1381, 68 USPQ2d 1865, 1871 (Fed. Cir. 2003). See also MPEP § 804.01."

The petition requires reconsideration of the compound, kits and pharmaceutical compositions comprising the compound, stating that it would require no to minimal burden to examine these claims and that the standard for making such a restriction (the two way combination & subcombination test of MPEP 805.05(c)) has not been met These arguments are persuasive. Claim 12, as amended on 5 April 2011, below, has been improperly placed in a separate group from the compound according to Claim 1.

12. (Withdrawn and Currently Amended) A pharmaceutical set or kit, comprising ~~Set (kit) consisting of~~ separate packs of

a) ~~an effective amount of~~ a compound according to Claim 1 ~~and/or physiologically acceptable salts, derivatives, solvates and stereoisomers thereof, including mixtures thereof in all ratios~~, and

b) ~~an effective amount of~~ a further pharmaceutically ~~medicament~~ active ingredient.

Other claims, such as Claim 11, have been similar restricted from the elected invention. This is counter to the Example 15 of the International Search and Examination Guidelines, where a composition comprising a compound is found to have unity with the compound.

10.35 Example 15

Claim 1: Compound A.

Claim 2: An insecticide composition comprising compound A and a carrier.

Unity exists between claims 1 and 2. The special technical feature common to all the claims is compound A.

For these reasons, the lack of unity requirement between the product claims (compound, kit, and pharmaceutical composition) is not warranted.

The petition also points out that the examiner has placed Markush claims into at least seven groups for the purposes of restriction. Because applicant's claims are drafted in Markush-type format, the petition argues that they should be considered under the guidelines of MPEP 803.02. This is persuasive.

On 9 February 2011, the Office issued A Federal Register Notice entitled "Supplemental Examination Guidelines for Determining Compliance with 35 U.S.C. 112 and for treatment of Related Issues in Patent Applications." Page 7166 sets forth guidelines for the treatment of Markush-type claims:

> "Under principles of compact prosecution, the examiner should also require the applicant to elect a species or group of indistinct species for search and examination (i.e., an election of species). If the examiner does not find the species or group of indistinct species in the prior art, then the examiner should extend the search to those additional species that fall within the scope of a permissible Markush claim. In other words, the examiner should extend the search to the species that share a single structural similarity and a common use. The improper Markush claim should be examined for patentability over the prior art with respect to the elected species or group of indistinct species, as well as the species that share a single structural similarity and a common use with the elected species or group of indistinct species (i.e., the species that would fall within the scope of a proper Markush claim)."

In view of these new guidelines, the restriction requirement between the embodiments of the Markush claims (Groups I-VII) is unwarranted and is hereby replaced with a provisional election of species requirement.

It is noticed that the examiner has required applicants to re-write claim directed solely to the elected subject matter. This is counter to MPEP 803.02 and 821.03. Applicants have a right to retain non-elected embodiments recited in the alternative of a single claim.

DECISION

The petition filed on 17 August 2011 is **GRANTED** follows.

The Office action mailed 10 June 2011 is incomplete for not addressing the composition and kit claims on the merits. For this reason, the finality of the Office action mailed 10 June 2011 is withdrawn.

The objection to claims for reciting non-elected subject matter and requirement to rewrite claims to be directed solely to the elected compounds is withdrawn.

The restriction requirement made between the product claims (Groups I-VII and IX) has been withdrawn and reformatted as an election of species requirement. Compound claims 1-7, 19 and 22, composition Claims 10-11 and kit claim 12 will be examined together. Markush claims are to be examined according to the guidance in MPEP 803.02 and the FR Notice of February 2011.

The application will be forwarded to the examiner to consider the papers filed 17 August 2011, and to prepare a supplemental Office action addressing the product claims consistent with this petition decision. Should the product claims be free of the prior art, the lack of unity determination will be withdrawn and the method of preparing the compound of Claim 8, and method of using the compound/composition of claims 13-14, 16-18 will be rejoined for examination.

Should there be any questions regarding this decision, please contact Quality Assurance Specialist Julie Burke by mail addressed to Director, Technology Center 1600, PO BOX 1450, ALEXANDRIA, VA 22313-1450, or by telephone at (571) 272-0512 or by Official Fax at 703-272-8300.

Rèmy Yucel
Director, Technology Center 1600

UNITED STATES PATENT AND TRADEMARK OFFICE

Commissioner for Patents
United States Patent and Trademark Office
P.O. Box 1450
Alexandria, VA 22313-1450
www.uspto.gov

MAILED
OCT 01 2010
OFFICE OF PETITIONS

Law Offices of Daniel L. Dawes
Dawes Patent Law Group
5200 Warner Blvd, Ste. 106
Huntington Beach CA 92649

In re Application of	:	
Ronald G. Holder et al.	:	
Application No. 11/912,498	:	DECISION ON PETITION
Filed: October 24, 2007	:	TO WITHDRAW
Attorney Docket No. **IMS1.PAU.08.US**	:	FROM RECORD
	:	

This is a decision on the Request to Withdraw as attorney or agent of record under 37 CFR § 1.36(b), filed September 8, 2010.

The request is **NOT APPROVED** as moot.

A review of the file record indicates that the power of attorney to attorneys/agents associated with Customer Number 79782 has been revoked by the applicants of the patent application on September 30, 2010. Accordingly, the request to withdraw under 37 CFR § 1.36(b) is moot.

All future communications from the Office will continue to be directed to the below-listed address until otherwise notified by applicant.

Telephone inquires concerning this decision should be directed to the undersigned at 571-272-4584.

/JoAnne Burke/
JoAnne Burke
Petitions Examiner
Office of Petitions

cc: KING & SPALDING LLP
1100 LOUISIANA ST., SUITE 4000
ATTN.: IP DOCKETING
HOUSTON, TX 77002-5213

UNITED STATES PATENT AND TRADEMARK OFFICE

Commissioner for Patents
United States Patent and Trademark Office
P.O. Box 1450
Alexandria, VA 22313-1450
www.uspto.gov

MARIA E. KITZ
CLARK HILL PLC
150 NORTH MICHIGAN AVENUE
SUITE 2700
CHICAGO IL 60601

MAILED
DEC 01 2011
OFFICE OF PETITIONS

In re Application of	:	
Papken Hovsepian et al.	:	
Application No. 11/912,549	:	DECISION ON PETITION
Filed: June 30, 2008	:	
Attorney Docket No. 2146/46946/8-PCT-US	:	

This is a decision on the petition under the unintentional provisions of 37 CFR 1.137(b), filed October 25, 2011, to revive the above-identified application.

The petition is **GRANTED**.

The application became abandoned for failure to reply in a timely manner to the non-final Office action mailed April 5, 2011, which set a shortened statutory period for reply of three (3) months. No extensions of time under the provisions of 37 CFR 1.136(a) were obtained. Accordingly, the application became abandoned on July 6, 2011.

The petition satisfies the requirements of 37 CFR 1.137(b) in that petitioner has supplied (1) the reply in the form of an amendment, (2) the petition fee of $930, (3) a proper statement of unintentional delay. Accordingly, the amendment is accepted as being unintentionally delayed.

Telephone inquiries concerning this decision should be directed to Kimberly Inabinet at (571) 272-4618.

This application is being referred to Technology Center AU 1784 for appropriate action by the Examiner in the normal course of business on the reply received October 25, 2011.

/Kimberly Inabinet/

Kimberly Inabinet
Petitions Examiner
Office of Petitions

UNITED STATES PATENT AND TRADEMARK OFFICE

Commissioner for Patents
United States Patent and Trademark Office
P.O. Box 1450
Alexandria, VA 22313-1450
www.uspto.gov

WOODCOCK WASHBURN LLP
CIRA CENTRE, 12TH FLOOR
2929 ARCH STREET
PHILADELPHIA, PA 19104-2891

MAILED

FEB 02 2011

OFFICE OF PETITIONS

In re Application of
Jason Y. Park, et al.
Application No.: 11/912,589
Filed: May 14, 2008
Attorney Docket No.: UPN-5084 / R3825

ON PETITION

This is a decision on the petition, filed February 1, 2011, under 37 CFR 1.313(c)(2) to withdraw the above-identified application from issue after payment of the issue fee.

The petition is **GRANTED**.

The above-identified application is withdrawn from issue for consideration of a submission under 37 CFR 1.114 (request for continued examination). See 37 CFR 1.313(c)(2).

Petitioner is advised that the issue fee paid on January 26, 2011, cannot be refunded. If, however, this application is again allowed, petitioner may request that it be applied towards the issue fee required by the new Notice of Allowance.[1]

Telephone inquiries relating to this decision should be directed to the undersigned at (571) 272-3204.

The application is being referred to Technology Center AU 1762 for further processing of the request for continued examination under 37 CFR 1.114 and for consideration of the concurrently filed Information Disclosure Statement (IDS).

/SDB/

Sherry D. Brinkley
Petitions Examiner
Office of Petitions

[1] *The request to apply the issue fee to the new Notice may be satisfied by completing and returning the new Part B – Fee(s) Transmittal Form (along with any balance due at the time of submission). Petitioner is advised that the Issue Fee Transmittal Form must be completed and timely submitted to avoid abandonment of the application.*

Doc Code: PET.AUTO Document Description: Petition automatically granted by EFS-Web	PTO/SB/140 U.S. Patent and Trademark Office Department of Commerce

Electronic Petition Request	**PETITION TO WITHDRAW AN APPLICATION FROM ISSUE AFTER PAYMENT OF THE ISSUE FEE UNDER 37 CFR 1.313(c)**
Application Number	11912593
Filing Date	11-Feb-2008
First Named Inventor	Takuji Maekawa
Art Unit	3693
Examiner Name	KEVIN POE
Attorney Docket Number	316338US8PCT
Title	DATA PROCESSING SYSTEM AND DATA PROCESSING METHOD

An application may be withdrawn from issue for further action upon petition by the applicant. To request that the Office withdraw an application from issue, applicant must file a petition under this section including the fee set forth in § 1.17(h) and a showing of good and sufficient reasons why withdrawal of the application from issue is necessary.

APPLICANT HEREBY PETITIONS TO WITHDRAW THIS APPLICATION FROM ISSUE UNDER 37 CFR 1.313(c).

A grantable petition requires the following items:
(1) Petition fee; and
(2) One of the following reasons:
(a) Unpatentability of one or more claims, which must be accompanied by an unequivocal statement that one or more claims are unpatentable, an amendment to such claim or claims, and an explanation as to how the amendment causes such claim or claims to be patentable;
(b) Consideration of a request for continued examination in compliance with § 1.114 (for a utility or plant application only); or
(c) Express abandonment of the application. Such express abandonment may be in favor of a continuing application, but not a CPA under 37 CFR 1.53(d).

Petition Fee

☐ Applicant claims SMALL ENTITY status. See 37 CFR 1.27.

☐ Applicant is no longer claiming SMALL ENTITY status. See 37 CFR 1.27(g)(2).

☐ Applicant(s) status remains as SMALL ENTITY.

☒ Applicant(s) status remains as other than SMALL ENTITY

Reason for withdrawal from issue

○ One or more claims are unpatentable

◉ Consideration of a request for continued examination (RCE) (List of Required Documents and Fees)

○ Applicant hereby expressly abandons the instant application (any attorney/agent signing for this reason must have power of attorney pursuant to 37 CFR 1.32(b)).

RCE request,submission, and fee.

☐ I certify, in accordance with 37 CFR 1.4(d)(4) that : The RCE request ,submission, and fee have already been filed in the above-identified application on

☒ Are attached.

THIS PORTION MUST BE COMPLETED BY THE SIGNATORY OR SIGNATORIES

I certify, in accordance with 37 CFR 1.4(d)(4) that I am:

◉ An attorney or agent registered to practice before the Patent and Trademark Office who has been given power of attorney in this application.

○ An attorney or agent registered to practice before the Patent and Trademark Office, acting in a representative capacity.

○ A sole inventor

○ A joint inventor; I certify that I am authorized to sign this submission on behalf of all of the inventors

○ A joint inventor; all of whom are signing this e-petition

○ The assignee of record of the entire interest that has properly made itself of record pursuant to 37 CFR 3.71

Signature	/Soumya Panda/
Name	Soumya Panda
Registration Number	60447

UNITED STATES PATENT AND TRADEMARK OFFICE

Commissioner for Patents
United States Patent and Trademark Office
P.O. Box 1450
Alexandria, VA 22313-1450
www.uspto.gov

Decision Date : April 3, 2012

In re Application of :

Takuji Maekawa

DECISION ON PETITION

UNDER CFR 1.313(c)(2)

Application No : 11912593

Filed : 11-Feb-2008

Attorney Docket No : 316338US8PCT

This is an electronic decision on the petition under 37 CFR 1.313(c)(2), filed April 3, 2012 , to withdraw the above-identified application from issue after payment of the issue fee.

The petition is **GRANTED.**

The above-identified application is withdrawn from issue for consideration of a submission under 37 CFR 1.114 (request for continued examination). See 37 CFR 1.313(c)(2).

Petitioner is advised that the issue fee paid in this application cannot be refunded. If, however, this application is again allowed, petitioner may request that it be applied towards the issue fee required by the new Notice of Allowance.

Telephone inquiries concerning this decision should be directed to the Patent Electronic Business Center (EBC) at 866-217-9197.

This application file is being referred to Technology Center AU 3693 for processing of the request for continuing examination under 37 CFR 1.114 .

Office of Petitions

UNITED STATES PATENT AND TRADEMARK OFFICE

Commissioner for Patents
United States Patent and Trademark Office
P.O. Box 1450
Alexandria, VA 22313-1450
www.uspto.gov

75715
DUANE MORRIS LLP - ATLANTA
IP DEPARTMENT
Atlantic Center Plaza
1180 West Peachtree Street, NW
Suite 700
Atlanta, GA 30309-3348

MAILED

JUL 29 2011

PCT LEGAL ADMINISTRATION

In re Application of
HOHMANN, Andrea G.
Application No.: 11/912,755
PCT No.: PCT/US2006/016296
Int. Filing Date: 27 April 2006
Priority Date: 28 April 2005
Attorney Docket No.: E7472-00015
For: METHODS AND MODELS FOR STRESS-INDUCED ANALGESIA

DECISION

Applicant's petition to revive under 37 CFR 1.137(b) filed on 13 May 2011 is hereby **GRANTED** as follows:

A declaration in compliance with 37 CFR 1.497(a) and (b) and a $65.00 surcharge fee constitutes the proper reply. The petition to revive fee for a small entity was provided. Applicant made the required statement pursuant to 37 CFR 1.137(b)(3). A terminal disclaimer is not required.

Accordingly, all requirements under 37 CFR 1.137(b) have been satisfied.

This application is being forwarded to the United States Designated/Elected Office for further processing.

James Thomson
Attorney Advisor
Office of PCT Legal Administration

Tel.: (571) 272-3302

UNITED STATES PATENT AND TRADEMARK OFFICE

Commissioner for Patents
United States Patent and Trademark Office
P.O. Box 1450
Alexandria, VA 22313-1450
www.uspto.gov

KATTEN MUCHIN ROSENMAN LLP
575 MADISON AVENUE
NEW YORK NY 10022-2585

MAILED
MAR 13 2012
OFFICE OF PETITIONS

In re Application of
Luca Toncelli
Application No. 11/912,776
Filed: October 26, 2007
Attorney Docket No. SAIC23267(100788-00156)

ON PETITION

This is a decision on the petition filed March 8, 2012, under the unintentional provisions of 37 CFR 1.137(b), to revive the above-identified application.

The petition is **GRANTED**.

The application became abandoned for failure to properly reply in a timely manner to the final Office action mailed, August 15, 2011, which set a shortened statutory period for reply of three (3) months. A three month extension of time under the provisions of 37 CFR 1.136(a) was obtained. Accordingly, the application became abandoned on February 16, 2012.

The petition satisfies the requirements of 37 CFR 1.137(b) in that petitioner has supplied (1) the reply in the form of a RCE (Request for Continued Examination, with the required fee of $930, (2) the petition fee of $1860, and (3) a proper statement of unintentional delay. Accordingly, the RCE is accepted as being unintentionally delayed.

Telephone inquiries concerning this decision should be directed to Kimberly Inabinet at (571) 272-4618.

This application is being referred to Technology Center AU 1747 for appropriate action by the Examiner in the normal course of business on the reply received March 8, 2012.

/Kimberly Inabinet/

Kimberly Inabinet
Petitions Examiner
Office of Petitions

Doc Code: PET.AUTO **Document Description: Petition automatically granted by EFS-Web**	PTO/SB/83 U.S. Patent and Trademark Office Department of Commerce

Electronic Petition Request	**REQUEST FOR WITHDRAWAL AS ATTORNEY OR AGENT AND CHANGE OF CORRESPONDENCE ADDRESS**
Application Number	11912787
Filing Date	01-May-2008
First Named Inventor	Soren Larsen
Art Unit	3751
Examiner Name	DAVID WALCZAK
Attorney Docket Number	606-173-PCT-PA
Title	WASHING BRUSH

◉ Please withdraw me as attorney or agent for the above identified patent application and the practitioners of record associated with Customer Number: 22145

The reason(s) for this request are those described in 37 CFR:

10.40(c)(1)(iv)

10.40(c)(1)(vi)

Certifications

☒ I/We have given reasonable notice to the client, prior to the expiration of the response period, that the practitioner(s) intend to withdraw from employment

☒ I/We have delivered to the client or a duly authorized representative of the client all papers and property (including funds) to which the client is entitled

☒ I/We have notified the client of any responses that may be due and the time frame within which the client must respond

Change the correspondence address and direct all future correspondence to the first named inventor or assignee that has properly made itself of record pursuant to 37 CFR 3.71:

Name	Carsten Brysting
Address	Himmelev Bygade 55
City	Roskilde
State	
Postal Code	DK-4000

Country	DK
I am authorized to sign on behalf of myself and all withdrawing practitioners.	
Signature	/HJK/
Name	Howard J. Klein
Registration Number	28727

UNITED STATES PATENT AND TRADEMARK OFFICE

Commissioner for Patents
United States Patent and Trademark Office
P.O. Box 1450
Alexandria, VA 22313-1450
www.uspto.gov

Decision Date : December 1, 2011

In re Application of :

Soren Larsen

Application No : 11912787

Filed : 01-May-2008

Attorney Docket No : 606-173-PCT-PA

DECISION ON REQUEST TO WITHDRAW AS ATTORNEY/AGENTOF RECORD

This is an electronic decision on the Request to Withdraw as attorney or agent of record under 37 CFR § 1.36(b), filed December 1, 2011

The request is **APPROVED.**

The request was signed by Howard J. Klein (registration no. 28727) on behalf of all attorneys/agents associated with Customer Number 22145 . All attorneys/agents associated with Cusotmer Number 22145 have been withdrawn.

Since there are no remaining attorneys of record, all future communications from the Office will be directed to the first named inventor or assignee that has properly made itself of record pursuant to 37 CFR 3.71, with correspondence address:

Name	Carsten Brysting
Name2	
Address 1	Himmelev Bygade 55
Address 2	
City	Roskilde
State	
Postal Code	DK-4000
Country	DK

As a reminder, requester is required to inform the first named inventor or assignee that has properly made itself of record pursuant to 37 CFR 3.71 of the electronically processed petition.

Telephone inquiries concerning this decision should be directed to the Patent Electronic Business Center (EBC) at 866-217-9197.

Office of Petitions

UNITED STATES PATENT AND TRADEMARK OFFICE

Commissioner for Patents
United States Patent and Trademark Office
P.O. Box 1450
Alexandria, VA 22313-1450
www.uspto.gov

LADAS & PARRY
5670 WILSHIRE BOULEVARD, SUITE 2100
LOS ANGELES CA 90036-5679

MAILED
NOV 10 2011
OFFICE OF PETITIONS

In re Application of	:	
Assis et al.	:	DECISION ON PETITION
Application No. 11/912,840	:	TO WITHDRAW
Filed: April 10, 2008	:	FROM RECORD
Attorney Docket No. B-6356PCT 624529-2	:	

This is a decision on the Request to Withdraw as attorney or agent of record under 37 C.F.R. § 1.36(b), filed November 2, 2011.

The request is **NOT APPROVED**.

A grantable request to withdraw as attorney/agent of record must be signed by every attorney/agent seeking to withdraw or contain a clear indication that one attorney is signing on behalf of another/others.

The request was signed by Mavis Gallenson on behalf of all attorneys of record, but does not include a Customer Number. Accordingly, since the practitioners were appointed by a Customer Number, the Request must reflect withdrawal of practitioners associated with the same Customer Number.

All future communications from the Office will continue to be directed to the above-listed address until otherwise notified by applicant.

Currently, there is an outstanding Office action mailed September 12, 2011 that requires a reply.

Telephone inquiries concerning this decision should be directed to the undersigned at (571) 272-7751. All other inquiries concerning either the examination or status of the application should be directed to the Technology Center.

/Joan Olszewski/
Joan Olszewski
Petitions Examiner
Office of Petitions

UNITED STATES PATENT AND TRADEMARK OFFICE

Commissioner for Patents
United States Patent and Trademark Office
P.O. Box 1450
Alexandria, VA 22313-1450
www.uspto.gov

LADAS & PARRY
5670 WILSHIRE BOULEVARD, SUITE 2100
LOS ANGELES CA 90036-5679

MAILED

DEC 01 2011

OFFICE OF PETITIONS

In re Application of	:	
Assis et al.	:	DECISION ON PETITION
Application No. 11/912,840	:	TO WITHDRAW
Filed: April 10, 2008	:	FROM RECORD
Attorney Docket No. B-6356PCT 624529-2	:	

This is a decision on the renewed Request to Withdraw as attorney or agent of record under 37 C.F.R. § 1.36(b), filed November 21, 2011.

The request is **NOT APPROVED**.

The Request for Withdrawal as Attorney or Agent and Change of Correspondence Address submitted on November 21, 2011 is hereby not accepted. Petitioner has not complied with current USPTO requirements, as set forth in 37 CFR 10.40 concerning Request for Withdrawal as Attorney and Change of Correspondence Address. Specifically, pursuant to 37 CFR 10.40, the Office will require the practitioner(s) to certify that he, she or they have:

(1) given reasonable notice to the client, prior to the expiration of the reply period, that the practitioner(s) intends to withdraw from employment;

(2) delivered to the client or a duly authorized representative of the client all papers and property (including funds) to which the client is entitled; and

(3) notified the client of any replies that may be due and the time frame within which the client must respond.

Petitioner has not complied with items (2) and (3) of the above certifications.

All future communications from the Office will continue to be directed to the above-listed address until otherwise notified by applicant.

Currently, there is an outstanding Office action mailed September 12, 2011 that requires a reply.

Telephone inquiries concerning this decision should be directed to the undersigned at (571) 272-7751. All other inquiries concerning either the examination or status of the application should be directed to the Technology Center.

/Joan Olszewski/
Joan Olszewski
Petitions Examiner
Office of Petitions

SPE RESPONSE FOR CERTIFICATE OF CORRECTION

Paper No.:20110920

DATE : August 19, 2011

TO SPE OF : ART UNIT 1643

SUBJECT : Request for Certificate of Correction on Patent No.: 7,786,266

A response is requested with respect to the accompanying request for a certificate of correction.

Please complete this form and return with file, within **7** days to:
Certificates of Correction Branch - ST (South Tower) 9A22
Palm location **7590** - Tel. No. (703) 305-8309

With respect to the change(s) requested, correcting Office and/or Applicant's errors, should the patent read as shown in the certificate of correction? No new matter should be introduced, nor should the scope or meaning of the claims be changed.

Thank You For Your Assistance **Certificates of Correction Branch**

The request for issuing the above-identified correction(s) is hereby:

Note your decision on the appropriated box.

☒ **Approved** All changes apply.

☐ **Approved in Part** Specify below which changes **do not** apply.

☐ **Denied** State the reasons for denial below.

Comments:

/MISOOK YU/
Supervisory Patent Examiner.Art Unit 1642

UNITED STATES PATENT AND TRADEMARK OFFICE

Commissioner for Patents
United States Patent and Trademark Office
P.O. Box 1450

MAILED

MAR 12 2012

OFFICE OF PETITIONS

LADAS & PARRY LLP
224 SOUTH MICHIGAN AVENUE
SUITE 1600
CHICAGO IL 60604

In re Application of : DECISION ON REQUEST TO
Naomi KITAMURA et al. : PARTICIPATE IN PPH PROGRAM
Application No. 11/912916 : AND PETITION TO MAKE SPECIAL
Filed: October 29, 2007 : UNDER 37 CFR 1.102(a)
Atty. Docket No.: CU-6180 BWH :
For: SKIN STATE ANALYZING METHOD, SKIN STATE ANALYZING APPARATUS, AND COMPUTER-READABLE MEDIUM STORING SKIN STATE ANALYZING PROGRAM

This is a decision on the request to participate in the Patent Prosecution Highway (PPH) program and the petition under 37 CFR 1.102(a), filed January 26, 2012 to make the above-identified application special.

The petition and request are **GRANTED**.

A grantable request to participate in the PPH (patent prosecution highway) program and petition to make special require:

(1) the U.S. application must validly claim priority under 35 U.S.C. 119(a) to one or more applications filed in the JPO (Japanese Patent Office);

(2) applicant must submit a copy of the allowable/patentable claim(s) from the JPO application(s) along with an English translation thereof and a statement that the English translation is accurate;

(3) all the claims in the U.S. application must sufficiently correspond or be amended to sufficiently correspond to the allowable/patentable claim(s) in the JPO application(s);

(4) examination of the U.S. application has not begun;

(5) applicant must submit a copy of all the office actions from each of the JPO application(s) containing the allowability/patentable claim(s) along with an English translation thereof and a statement that the English translation is accurate; and

(6) applicant must submit an IDS listing the documents cited by the JPO examiner in the JPO office action along with copies of documents except U.S. patents or U.S. patent application publications.

The request to participate in the PPH program and petition comply with the above requirements. Accordingly, the above-identified application has been accorded "special" status.

Telephone inquiries concerning this decision should be directed to Robert DeWitty, Petition Attorney, Office of Petitions at 571-272-8427.

All other inquiries concerning the examination or status of the application is accessible in the PAIR system at http://www.uspto.gov/ebc/index.html.

This application will be forwarded to Technology Center Art Unit 3735 for action commensurate with this decision.

Thurman K. Page

David Bucci
Petitions Examiner
Office of Petitions

SPE RESPONSE FOR CERTIFICATE OF CORRECTION

DATE : 08/25/11

TO SPE OF : ART UNIT: 1765 Attn: SEIDLECK JAMES (SPE)

SUBJECT : Request for Certificate of Correction for Appl. No.: 11/912949 Patent No.: 7888400

CofC mailroom date: 08/17/11

Please respond to this request for a certificate of correction within 7 days.

FOR IFW FILES:

Please review the requested changes/corrections as shown in the **COCIN** document(s) in the IFW application image. No new matter should be introduced, nor should the scope or meaning of the claims be changed.

Please complete the response (see below) and forward the completed response to scanning using document code **COCX**.

FOR PAPER FILES:

Please review the requested changes/corrections as shown in the attached certificate of correction. Please complete this form (see below) and forward it with the file to:

Certificates of Correction Branch (CofC)
Randolph Square – 9D10-A
Palm Location 7580

Note: Please check the Specifications & Claims
Should these requested changes be made or not

Tasneem Siddiqui
Certificates of Correction Branch
703-756-1814 & 703-756-1593

Thank You For Your Assistance

The request for issuing the above-identified correction(s) is hereby:
Note your decision on the appropriate box.

- ☒ **Approved** — **All** changes apply.
- ☐ **Approved in Part** — Specify below which changes **do not** apply.
- ☐ **Denied** — State the reasons for denial below.

Comments: _____

SPE

1765
Art Unit

Doc Code: PET.AUTO **Document Description: Petition automatically granted by EFS-Web**	PTO/SB/83 U.S. Patent and Trademark Office Department of Commerce

Electronic Petition Request	**REQUEST FOR WITHDRAWAL AS ATTORNEY OR AGENT AND CHANGE OF CORRESPONDENCE ADDRESS**
Application Number	11912972
Filing Date	22-May-2008
First Named Inventor	Serge Jaure
Art Unit	3634
Examiner Name	GREGORY STRIMBU
Attorney Docket Number	159/19
Title	TYPE OF SHUTTER

◉ Please withdraw me as attorney or agent for the above identified patent application and the practitioners of record associated with Customer Number: 91209

The reason(s) for this request are those described in 37 CFR:

10.40(b)(4)

Certifications

☒ I/We have given reasonable notice to the client, prior to the expiration of the response period, that the practitioner(s) intend to withdraw from employment

☒ I/We have delivered to the client or a duly authorized representative of the client all papers and property (including funds) to which the client is entitled

☒ I/We have notified the client of any responses that may be due and the time frame within which the client must respond

Change the correspondence address and direct all future correspondence to the first named inventor or assignee that has properly made itself of record pursuant to 37 CFR 3.71:

Name	Serge JAURE
Address	120 av des Deux Ponts
City	Cazilhac
State	
Postal Code	34190
Country	FR

I am authorized to sign on behalf of myself and all withdrawing practitioners.	
Signature	/Andrew W. Chu/
Name	Andrew W. Chu
Registration Number	46625

UNITED STATES PATENT AND TRADEMARK OFFICE

Commissioner for Patents
United States Patent and Trademark Office
P.O. Box 1450
Alexandria, VA 22313-1450
www.uspto.gov

Decision Date : September 30,2011

In re Application of :

Serge Jaure

Application No : 11912972

Filed : 22-May-2008

Attorney Docket No : 159/19

DECISION ON REQUEST TO WITHDRAW AS ATTORNEY/AGENTOF RECORD

This is an electronic decision on the Request to Withdraw as attorney or agent of record under 37 CFR § 1.36(b), filed September 30,2011

The request is **APPROVED.**

The request was signed by Andrew W. Chu (registration no. 46625) on behalf of all attorneys/agents associated with Customer Number 91209 . All attorneys/agents associated with Cusotmer Number 91209 have been withdrawn.

Since there are no remaining attorneys of record, all future communications from the Office will be directed to the first named inventor or assignee that has properly made itself of record pursuant to 37 CFR 3.71, with correspondence address:

Name	Serge JAURE
Name2	
Address 1	120 av des Deux Ponts
Address 2	
City	Cazilhac
State	
Postal Code	34190
Country	FR

As a reminder, requester is required to inform the first named inventor or assignee that has properly made itself of record pursuant to 37 CFR 3.71 of the electronically processed petition.

Telephone inquiries concerning this decision should be directed to the Patent Electronic Business Center (EBC) at 866-217-9197.

Office of Petitions

SPE RESPONSE FOR CERTIFICATE OF CORRECTION

Paper No.:20110131

DATE : January 31, 2011

TO SPE OF : ART UNIT 3662

SUBJECT : Request for Certificate of Correction on Patent No.: 7692582

A response is requested with respect to the accompanying request for a certificate of correction.

Please complete this form and return with file, within **7** days to:
Certificates of Correction Branch - PK 3-910
Palm location **7590** - Tel. No. 305-8201

With respect to the change(s) requested, correcting Office and/or Applicant's errors, should the patent read as shown in the certificate of correction? No new matter should be introduced, nor should the scope or meaning of the claims be changed.

Thank You For Your Assistance **Certificates of Correction Branch**

The request for issuing the above-identified correction(s) is hereby:
Note your decision on the appropriate box.

☒ **Approved** **All** changes apply.

☐ **Approved in Part** Specify below which changes **do not** apply.

☐ **Denied** State the reasons for denial below.

Comments:

SPE: /Thomas H. Tarcza/ **Art Unit** 3662

UNITED STATES PATENT AND TRADEMARK OFFICE

COMMISSIONER FOR PATENTS
UNITED STATES PATENT AND TRADEMARK OFFICE
P.O. BOX 1450

MAILED
FEB 03 2011
OFFICE OF PETITIONS

Turocy & Watson, LLP
127 Public Square
57th Floor, 127 Public Square
Cleveland, Ohio 44114

In re Application of	:	
Chenggang ZHANG et al.	:	DECISION GRANTING PETITION
Application No. 11/913,134	:	UNDER 37 CFR 1.137(b)
Filed: 30 October 2009	:	
Atty. Docket No.: JEEKP105US	:	

This is a decision on the petition under 37 CFR 1.137(b), filed 6 January 2011, to revive the above-identified application ("Application").

The petition is **GRANTED**.

The Application became abandoned for failure to reply in a timely manner to the requirement for restriction mailed 13 October 2010 ("outstanding Office action"), which set a shortened statutory reply period of one (1) month. No extension of time under the provisions of 37 CFR 1.136(a) was obtained. The application thus became abandoned on 14 November 2010.

A grantable petition under 37 CFR 1.137(b) must be accompanied by: (1) the reply, unless previously filed; (2) the petition fee as set forth in 37 CFR 1.17(m); (3) a Statement that the entire delay in filing the required reply from the due date for the reply until the filing of a grantable petition pursuant to 37 CFR 1.137(b) was unintentional; and (4) any terminal disclaimer (and fee as set forth in 37 CFR 1.20(d)) required by 37 CFR 1.137(d).

The petition satisfies the conditions for revival pursuant to 37 CFR 1.137(b) by including (1) a reply in the form of a Response to the outstanding Office action, (2) a petition fee of $1620.00, and (3) a Statement of unintentional delay. The reply to the Notice is accepted as having been unintentionally delayed.

General inquiries relating to this decision should be directed to Robert DeWitty, Petitions Examiner, Office of Petitions (571-272-6051), or, if unavailable, the undersigned at 571-272-7099.

The application file will be referred to Technology Center AU 1649 for further action on the filed Response.

David Buccdi
Petitions Examiner
Office of Petitions

UNITED STATES PATENT AND TRADEMARK OFFICE

UNITED STATES DEPARTMENT OF COMMERCE
United States Patent and Trademark Office
Address: COMMISSIONER FOR PATENTS
P.O. Box 1450
Alexandria, Virginia 22313-1450
www.uspto.gov

APPLICATION NO.	FILING DATE	FIRST NAMED INVENTOR	ATTORNEY DOCKET NO.	CONFIRMATION NO.
11/913,156	12/23/2008	Thomas Carell	13978-5	8483

45473 7590 10/21/2010
BRINKS, HOFER, GILSON & LIONE
P.O. BOX 110285
RESEARCH TRIANGLE PARK, NC 27709

EXAMINER
GROSS, CHRISTOPHER M

ART UNIT	PAPER NUMBER
1639	

MAIL DATE	DELIVERY MODE
10/21/2010	PAPER

Please find below and/or attached an Office communication concerning this application or proceeding.

The time period for reply, if any, is set in the attached communication.

UNITED STATES PATENT AND TRADEMARK OFFICE

Commissioner for Patents
United States Patent and Trademark Office
P.O. Box 1450
Alexandria, VA 22313-1450
www.uspto.gov

OCT 2 1 2010

BRINKS, HOFER, GILSON & LIONE
P.O. BOX 110285
RESEARCH TRIANGLE PARK NC 27709

In re Application of	:	
CARELL, THOMAS et. al.	:	DECISION ON REQUEST TO
Application No. 11/913,156	:	PARTICIPATE IN PATENT
Filed: December 23, 2008	:	PROSECUTION HIGHWAY
Attorney Docket No. 13978-5	:	PILOT PROGRAM AND PETITION
	:	TO MAKE SPECIAL UNDER
	:	37 CFR 1.102(d)

This is a decision on the request to participate in the Patent Prosecution Highway (PPH) pilot program and the petition under 37 CFR 1.102(d), filed June 30, 2010, to make the above-identified application special.

The request and petition are **GRANTED**.

A grantable request to participate in the PPH pilot program and petition to make special require:

(1) The U.S. application must validly claim priority under 35 U.S.C. 119(a) to one or more applications filed in the EPO;
(2) All the claims in the U.S. application must sufficiently correspond or be amended to sufficiently correspond to the allowable/patentable claim(s) in the EPO application(s);
(3) Examination of the U.S. application has not begun;
(4) Applicant must submit a copy of all the office actions from each of the EPO application(s) containing the allowable/patentable claim(s) that are the basis for the request.
(5) Applicant must submit an IDS listing the documents cited by the EPO examiner in the EPO office action along with copies of documents except U.S. patents or U.S. patent application publications; and

The request to participate in the PPH pilot program and petition comply with the above requirements. It is noted that two EPO office actions were listed in the IDS filed on 5/27/2009 and the copies of the office actions have been provided. Accordingly, the above-identified application has been accorded "special" status.

Telephone inquiries concerning this decision should be directed to Ram R. Shukla at 571-272-0735.

All other inquiries concerning the examination or status of the application should be directed to Patent Application Information Retrieval (PAIR) system at the http://www.uspto.gov/ebc/index.html.

The application is being forwarded to the examiner for action on the merits commensurate with this decision.

Ram R. Shukla, Ph.D.
Supervisory Patent Examiner
TC 1600

UNITED STATES PATENT AND TRADEMARK OFFICE

Commissioner for Patents
United States Patent and Trademark Office
P.O. Box 1450
Alexandria, VA 22313-1450
www.uspto.gov

WILLIAM J BUNDREN
THE LAW OFFICE OF WILLIAM J BUNDREN
734 LARUE ROAD
MILLERSVILLE MD 21108

MAILED

FEB 28 2011

OFFICE OF PETITIONS

In re Application of	:	
Marques et al.	:	
Application No. 11/913,161	:	DECISION ON PETITION
Date Deposited: October 30, 2007	:	
Attorney Docket No. INN.13.4	:	

This is a decision on the petition under the unintentional provisions of 37 CFR 1.137(b), filed January 14, 2011, to revive the above-identified application.

The petition is **DISMISSED AS MOOT**.

On April 22, 2010, the USPTO mailed petitioner a Notice of Termination of Proceedings under 37 CFR 1.53(e), stating that the proceedings on the above-identified application had been terminated. The Notice indicated that the application did not meet the requirements of 37 CFR 1.53(b), (c) or (d) to be entitled to a filing date, and that the filing errors specified in the Notice of Incomplete Nonprovisional Application (Notice) mailed on January 14, 2010, were not timely corrected. The Office required a $130.00 handling fee.

In response, petitioner filed the present petition to revive the application and paid an $810.00 fee. The Office notes that the proceedings have been terminated because the application is not entitled to a filing date; therefore, the application cannot become abandoned. Accordingly, the filing of a petition under 37CFR 1.137(b) is inappropriate under the circumstances of this case. For this reason, the petition is dismissed as moot. Accordingly, the $810.00 fee will be refunded to petitioner's credit card in due course.

Further, it is not apparent whether the person signing the instant petition was ever given a power of attorney or authorization of agent to prosecute this patent application. In accordance with 37 CFR 1.34(a), the signature appearing on the petition shall constitute a representation to the United States Patent and Trademark Office that he/she is authorized to represent the particular party in whose behalf he/she acts.

Telephone inquiries concerning this decision should be directed to the undersigned at (571) 272-7751.

A substitute Specification was received on January 14, 2011. Accordingly, this application is being referred to the Office of Patent Application Processing for further processing.

Joan Olszewski
Petitions Examiner
Office of Petitions

UNITED STATES PATENT AND TRADEMARK OFFICE

Commissioner for Patents
United States Patent and Trademark Office
P.O. Box 1450
Alexandria, VA 22313-1450
www.uspto.gov

KILPATRICK TOWNSEND & STOCKTON LLP
TWO EMBARCADERO CENTER
EIGHTH FLOOR
SAN FRANCISCO CA 94111-3834

MAILED
DEC 07 2011
OFFICE OF PETITIONS

In re Application of	:	
Yusuke Nakamura, et al.	:	
Application No. 11/913,228	:	DECISION GRANTING PETITION
Filed: March 27, 2009	:	UNDER 37 CFR 1.313(c)(2)
Attorney Docket No. 87331-738337	:	

This is a decision on the petition under 37 CFR 1.313(c)(2), filed, December 6, 2011 to withdraw the above-identified application from issue after payment of the issue fee.

The petition is **GRANTED**.

The above-identified application is withdrawn from issue for consideration of a submission under 37 CFR 1.114 (request for continued examination). *See* 37 CFR 1.313(c)(2).

Petitioner is advised that the issue fee paid on December 1, 2011 cannot be refunded. If, however, this application is again allowed, petitioner may request that it be applied towards the issue fee required by the new Notice of Allowance.[1]

Telephone inquiries should be directed to Terri Johnson at (571) 272-2991.

This application is being referred to Technology Center AU 1643 for processing of the request for continued examination under 37 CFR 1.114 and for consideration of the concurrently filed information disclosure statement.

/Terri Johnson/
Terri Johnson
Petitions Examiner
Office of Petitions

[1] *The request to apply the issue fee to the new Notice may be satisfied by completing and returning the new Part B – Fee(s) Transmittal Form (along with any balance due at the time of submission). Petitioner is advised that the Issue Fee Transmittal Form must be completed and timely submitted to avoid abandonment of the application.*

UNITED STATES PATENT AND TRADEMARK OFFICE

UNITED STATES DEPARTMENT OF COMMERCE
United States Patent and Trademark Office
Address: COMMISSIONER FOR PATENTS
P.O. Box 1450
Alexandria, Virginia 22313-1450
www.uspto.gov

APPLICATION NO.	FILING DATE	FIRST NAMED INVENTOR	ATTORNEY DOCKET NO.	CONFIRMATION NO.
11/913,229	06/18/2008	Toshio Matsumoto	14875-182US1 CI-A0505P-US	1545

26161 7590 10/03/2011
FISH & RICHARDSON P.C. (BO)
P.O. BOX 1022
MINNEAPOLIS, MN 55440-1022

EXAMINER
STOICA, ELLY GERALD

ART UNIT	PAPER NUMBER
1647	

NOTIFICATION DATE	DELIVERY MODE
10/03/2011	ELECTRONIC

Please find below and/or attached an Office communication concerning this application or proceeding.

The time period for reply, if any, is set in the attached communication.

Notice of the Office communication was sent electronically on above-indicated "Notification Date" to the following e-mail address(es):

PATDOCTC@fr.com

UNITED STATES PATENT AND TRADEMARK OFFICE

Commissioner for Patents
United States Patent and Trademark Office
P.O. Box 1450
Alexandria, VA 22313-1450
www.uspto.gov

OCT 3 2011

FISH & RICHARDSON P.C. (BO)
P.O. BOX 1022
MINNEAPOLIS MN 55440-1022

In re Application of:	:
Matsumoto et al.	:
Serial No.: 11/913,229	: PETITION DECISION
Filed: June 18, 2008	:
Attorney Docket No.: **14875-182US1 CI-A0505P-US**	

This is in response to the petition under 37 CFR § 1.59(b), filed September 14, 2011, to expunge information from the above identified application. This application has not been allowed.

Petitioner requests that information submitted to the Patent Office on September 14, 2011, be expunged from the record. Petitioner states either: (A) that the information contains trade secret material, proprietary material and/or material that is subject to a protective order which has not been made public; or (B) that the information submitted was unintentionally submitted and the failure to obtain its return would cause irreparable harm to the party who submitted the information or to the party in interest on whose behalf the information was submitted, and the information has not otherwise been made public. The petition fee set forth in 37 CFR § 1.17(g) has been paid.

This is an examined application which is currently under non-final rejection. As such the information provided has been reviewed, in part, but proceedings in the application have not been terminated. As stated in M.P.E.P. 724, upon allowance or other action closing prosecution in an application, petition may be made for return of Proprietary information. The information cannot be expunged at this time.

The petition is **DISMISSED**. Petitioner may resubmit the petition subsequent to a Notice of Allowability or *ex parte Quayle* action being mailed in the application. No additional petition fee will be required at that time.

Should there be any questions about this decision please contact Marianne C. Seidel by letter addressed to Director, TC 1600, at the address listed above, or by telephone at 571-272-0584 or by facsimile sent to the general Office facsimile number, 571-273-8300.

/MC Seidel/
Marianne C. Seidel, Quality Assurance Specialist
Technology Center 1600

UNITED STATES PATENT AND TRADEMARK OFFICE

Commissioner for Patents
United States Patent and Trademark Office
P.O. Box 1450
Alexandria, VA 22313-1450
www.uspto.gov

Decision Date : May 27,2011

In re Application of :

Martin Selbrede

DECISION ON PETITION

UNDER CFR 1.313(c)(2)

Application No : 11913232

Filed : 31-Oct-2007

Attorney Docket No : UPIXP0116WOUSA

This is an electronic decision on the petition under 37 CFR 1.313(c)(2), filed May 27,2011 , to withdraw the above-identified application from issue after payment of the issue fee.

The petition is **GRANTED.**

The above-identified application is withdrawn from issue for consideration of a submission under 37 CFR 1.114 (request for continued examination). See 37 CFR 1.313(c)(2).

Petitioner is advised that the issue fee paid in this application cannot be refunded. If, however, this application is again allowed, petitioner may request that it be applied towards the issue fee required by the new Notice of Allowance.

Telephone inquiries concerning this decision should be directed to the Patent Electronic Business Center (EBC) at 866-217-9197.

This application file is being referred to Technology Center AU 2628 for processing of the request for continuing examination under 37 CFR 1.114 .

Office of Petitions

Doc Code: PET.AUTO Document Description: Petition automatically granted by EFS-Web	PTO/SB/140 U.S. Patent and Trademark Office Department of Commerce

Electronic Petition Request	**PETITION TO WITHDRAW AN APPLICATION FROM ISSUE AFTER PAYMENT OF THE ISSUE FEE UNDER 37 CFR 1.313(c)**
Application Number	11913232
Filing Date	31-Oct-2007
First Named Inventor	Martin Selbrede
Art Unit	2628
Examiner Name	WESNER SAJOUS
Attorney Docket Number	UPIXP0116WOUSA
Title	MECHANISM TO MITIGATE COLOR BREAKUP ARTIFACTS IN FIELD SEQUENTIAL COLOR DISPLAY SYSTEMS

An application may be withdrawn from issue for further action upon petition by the applicant. To request that the Office withdraw an application from issue, applicant must file a petition under this section including the fee set forth in § 1.17(h) and a showing of good and sufficient reasons why withdrawal of the application from issue is necessary.

APPLICANT HEREBY PETITIONS TO WITHDRAW THIS APPLICATION FROM ISSUE UNDER 37 CFR 1.313(c).

A grantable petition requires the following items:
(1) Petition fee; and
(2) One of the following reasons:
(a) Unpatentability of one or more claims, which must be accompanied by an unequivocal statement that one or more claims are unpatentable, an amendment to such claim or claims, and an explanation as to how the amendment causes such claim or claims to be patentable;
(b) Consideration of a request for continued examination in compliance with § 1.114 (for a utility or plant application only); or
(c) Express abandonment of the application. Such express abandonment may be in favor of a continuing application, but not a CPA under 37 CFR 1.53(d).

Petition Fee

☐ Applicant claims SMALL ENTITY status. See 37 CFR 1.27.

☐ Applicant is no longer claiming SMALL ENTITY status. See 37 CFR 1.27(g)(2).

☐ Applicant(s) status remains as SMALL ENTITY.

☒ Applicant(s) status remains as other than SMALL ENTITY

Reason for withdrawal from issue

○ One or more claims are unpatentable

◉ Consideration of a request for continued examination (RCE) (List of Required Documents and Fees)

○ Applicant hereby expressly abandons the instant application (any attorney/agent signing for this reason must have power of attorney pursuant to 37 CFR 1.32(b)).

RCE request,submission, and fee.

☐ I certify, in accordance with 37 CFR 1.4(d)(4) that : The RCE request ,submission, and fee have already been filed in the above-identified application on

☒ Are attached.

THIS PORTION MUST BE COMPLETED BY THE SIGNATORY OR SIGNATORIES

I certify, in accordance with 37 CFR 1.4(d)(4) that I am:

◉ An attorney or agent registered to practice before the Patent and Trademark Office who has been given power of attorney in this application.

○ An attorney or agent registered to practice before the Patent and Trademark Office, acting in a representative capacity.

○ A sole inventor

○ A joint inventor; I certify that I am authorized to sign this submission on behalf of all of the inventors

○ A joint inventor; all of whom are signing this e-petition

○ The assignee of record of the entire interest that has properly made itself of record pursuant to 37 CFR 3.71

Signature	/Donald L. Otto/
Name	Donald L. Otto
Registration Number	22125

UNITED STATES PATENT and TRADEMARK OFFICE

COMMISSIONER FOR PATENTS
UNITED STATES PATENT AND TRADEMARK OFFICE
P.O BOX 1450
ALEXANDRIA, VA 22313-1450
www.uspto.gov

LATHROP & GAGE LLP
4845 Pearl East Circle
Suite 201
Boulder, CO

MAILED

DEC 30 2010

PCT LEGAL ADMINISTRATION

In re Application of	:	DECISION ON RENEWED
Saumitra DAS et al	:	
Application No.: 11/913,311	:	
PCT No.: PCT/IN06/000141	:	
Int. Filing Date: 24 April 2006	:	PETITION UNDER
Priority Date: 02 May 2005	:	
Attorney's Docket No.: 474071	:	
For: ANTIVIRAL PEPTIDE AGAINST	:	
HEPAPTITIS C VIRUS	:	37 CFR 1.137(b)

This decision is responsive to applicants' "REQUEST FOR RECONSIDERATION OF DECISION ON PETITION UNDER 37 CFR 1.137(b)" filed on 26 August 2010 requesting the acceptance of the executed declaration.

BACKGROUND

In a decision from this Office on 26 August 2010, the declaration submitted was not accepted because it did not comply with 37 CFR 1.497(a) and (b) because applicants submitted a composite declarations, which were incomplete.

On 26 August 2010 applicants submitted a second renewed petition under 37 CFR 1.137(b) submitting a proper executed declaration.

DISCUSSION

The declarations filed on 26 August 2010 is a properly executed declaration that satisfies the conditions set forth under 37 CFR 1.497(a) and (b).

DECISION

The petition is **GRANTED**.

This application is being returned to the United States Designated/Elected Office (DO/EO/US) for continued processing.

Rafael Bacares
PCT Legal Examiner
PCT Legal Examiner
Telephone: (571) 272-3276
Facsimile: (571) 273-0459

UNITED STATES PATENT AND TRADEMARK OFFICE

UNITED STATES DEPARTMENT OF COMMERCE
United States Patent and Trademark Office
Address: COMMISSIONER FOR PATENTS
P.O. Box 1450
Alexandria, Virginia 22313-1450
www.uspto.gov

APPLICATION NO.	FILING DATE	FIRST NAMED INVENTOR	ATTORNEY DOCKET NO.	CONFIRMATION NO.
11/913,324	11/01/2007	Masayuki Tanaka	Q104666	3704

23373 7590 07/21/2011
SUGHRUE MION, PLLC
2100 PENNSYLVANIA AVENUE, N.W.
SUITE 800
WASHINGTON, DC 20037

EXAMINER
COUSO, YON JUNG

ART UNIT	PAPER NUMBER
2624	

NOTIFICATION DATE	DELIVERY MODE
07/21/2011	ELECTRONIC

Please find below and/or attached an Office communication concerning this application or proceeding.

The time period for reply, if any, is set in the attached communication.

Notice of the Office communication was sent electronically on above-indicated "Notification Date" to the following e-mail address(es):

sughrue@sughrue.com
PPROCESSING@SUGHRUE.COM
USPTO@SUGHRUE.COM

UNITED STATES PATENT AND TRADEMARK OFFICE

Commissioner for Patents
United States Patent and Trademark Office
P.O. Box 1450
Alexandria, VA 22313-1450
www.uspto.gov

SUGHRUE MION, PLLC
2100 PENNSYLVANIA AVENUE, N.W.
SUITE 800
WASHINGTON DC 20037

JUL 21 2011

In re Application of	:	
Tanaka, Masayuki *et al.*	:	
Serial No.: 11/913,324	:	
Filed: November 01, 2007	:	DECISION ON PETITION
For: **FAST METHOD OF SUPER-RESOLUTION PROCESSING**	:	*ACCEPTANCE OF COLOR PHOTOGRAPHS*

This is a decision on the petition under 37 C.F.R. § 1.84(b)(2) filed November 1, 2007 requesting the acceptance of colored photographs in lieu of black and white drawings.

The petition requests that the color photograph for Figure 7 be accepted in lieu of black and white drawings.

A grantable petition under 37 C.F.R. §1.84(a)(2) must be accompanied by a fee set forth under 37 C.F.R. § 1.17(h), 3 (three) sets of the color drawings in question, and the specification must contain, or be amended to contain, the following language as the first paragraph in that portion of the specification relating to the brief description of the drawings:

"The file of this patent contains at least one drawing executed in color. Copies of this patent with color drawing(s) will be provided by the Patent and Trademark Office upon request and payment of the necessary fee."

The petition did not contain and was not amended to contain the proper language, as stated above in the first paragraph in that portion of the specification relating to the brief description of the drawings.

Therefore the *petition* is **DISMISSED**.

The petitioner may submit a request for reconsideration within **TWO MONTHS** of the date of this decision. Any request for reconsideration should be complete, i.e., include three (3) sets of color drawings, color photographs and a black and white photocopy of the same, as well as amending the specification to include the above statement.

Michael Horabik
Special Program Examiner
Technology Center 2600
Communications

UNITED STATES PATENT AND TRADEMARK OFFICE

UNITED STATES DEPARTMENT OF COMMERCE
United States Patent and Trademark Office
Address: COMMISSIONER FOR PATENTS
P.O. Box 1450
Alexandria, Virginia 22313-1450
www.uspto.gov

APPLICATION NO.	FILING DATE	FIRST NAMED INVENTOR	ATTORNEY DOCKET NO.	CONFIRMATION NO.
11/913,324	11/01/2007	Masayuki Tanaka	Q104666	3704

23373 7590 08/18/2011
SUGHRUE MION, PLLC
2100 PENNSYLVANIA AVENUE, N.W.
SUITE 800
WASHINGTON, DC 20037

EXAMINER
COUSO, YON JUNG

ART UNIT	PAPER NUMBER
2624	

NOTIFICATION DATE	DELIVERY MODE
08/18/2011	ELECTRONIC

Please find below and/or attached an Office communication concerning this application or proceeding.

The time period for reply, if any, is set in the attached communication.

Notice of the Office communication was sent electronically on above-indicated "Notification Date" to the following e-mail address(es):

sughrue@sughrue.com
PPROCESSING@SUGHRUE.COM
USPTO@SUGHRUE.COM

UNITED STATES PATENT AND TRADEMARK OFFICE

Commissioner for Patents
United States Patent and Trademark Office
P.O. Box 1450
Alexandria, VA 22313-1450
www.uspto.gov

MAIL

AUG 17 2011
DIRECTOR'S OFFICE
TECHNOLOGY CENTER 2600

SUGHRUE MION, PLLC
2100 PENNSYLVANIA AVENUE, N.W.
SUITE 800
WASHINGTON DC 20037

MAIL
MAIL
AUG 17 2011
AUG 17 2011
DIRECTOR'S OFFICE
TECHNOLOGY CENTER 2600
DIRECTOR'S OFFICE
TECHNOLOGY CENTER 2600

In re Application of :
Maysauki Tanaka :
Serial No.: 11/913,324 :
Filed: November 01, 2007

: *DECISION ON PETITION*

For: **FAST METHOD OF SUPER-RESOLUTION PROCESSING** : *Acceptance Of Color Drawings*

This is a decision on the petition under 37 CFR §1.184(a)(2), filed November 01, 2007 requesting acceptance of color drawings.

The petition requests that the color drawings identified in FIG. 7, a, b, c and d be accepted in lieu of black and white drawings.

A grantable petition under 37 C.F.R. §1.84(a)(2) must be accompanied by a fee set forth under 37 C.F.R. § 1.17(h), 3 (three) sets of the color drawings in question, and the specification must contain, or be amended to contain, the following language as the first paragraph in that portion of the specification relating to the brief description of the drawings:

"The file of this patent contains at least one drawing executed in color. Copies of this patent with color drawing(s) will be provided by the Patent and Trademark Office upon request and payment of the necessary fee."

The petition is GRANTED.

Michael Horabik
Quality Assurance Specialist
Technology Center 2600
Communications

UNITED STATES PATENT AND TRADEMARK OFFICE

Commissioner for Patents
United States Patent and Trademark Office
Washington, D.C. 20231
www.uspto.gov

MAILED

JAN 31 2011

PCT LEGAL ADMINISTRATION

DECHERT LLP
P.O. BOX 390460
MOUNTAIN VIEW CA 94039-0460

In re Application of	:	
WOOD, et al.	:	DECISION ON PETITION
Serial No.: 11/913,377	:	
PCT No.: PCT/US2006/021989	:	UNDER 37 CFR 1.47(a)
Int. Filing Date: 06 June 2006	:	
Priority Date: 06 June 2005	:	
Atty Docket No.: 374321-02930US (370461)	:	
For: TRUE TIME DELAY PHASE ARRAY RADAR	:	
USING ROTARY CLOCKS AND ELECTRONIC	:	
DELAY LINES	:	

This decision is in response to applicant's petition under 37 CFR 1.47(a) filed 27 December 2010 in the United States Patent and Trademark Office (USPTO).

BACKGROUND

On 06 June 2006, applicant filed international application PCT/US2006/021989 which claimed priority to a previous application filed 06 June 2005. Pursuant to 37 CFR 1.495, the thirty-month period for paying the basic national fee in the United States was set to expire at midnight on 06 December 2007.

On 01 November 2007, applicant filed a transmittal letter for entry into the national stage in the United States, which was accompanied by, among other items, the requisite basic national fee as required by 35 U.S.C. 371(c)(1) and a preliminary amendment.

On 27 May 2010, applicant was mailed a NOTIFICATION OF MISSING REQUIREMENTS UNDER 35 U.S.C. 371 (Form PCT/DO/EO/905) informing applicant of the need to provide an executed oath or declaration of the inventors, in compliance with 37 CFR 1.497(a) and (b), identifying the application by the international application number and international filing date. Applicant was given two months to respond and advised that this time period could be extended with a proper petition and payment of fees.

On 27 December 2010, applicant filed the present petition under 37 CFR 1.47(a) accompanied by a petition for a five-month extension of time. With payment of the five-month extension of time, applicant's present response is considered timely filed.

DISCUSSION

A petition under 37 CFR 1.47(a) must be accompanied by (1) the fee under 37 CFR 1.17(g), (2) factual proof that the missing joint investor refuses to execute the application or cannot be reached after diligent effort, (3) a statement of the last known address of the missing inventor, and (4) an oath or declaration by each 37 CFR 1.47(a) applicant on his or her own behalf and on behalf of the non-signing joint inventor. Applicant has satisfied items 1, 3 and 4.

As to item (2), as stated in the Manual of Patent Examination Procedure (MPEP), Section 409.03(d) states that in cases where applicant argues that the non-signing inventor cannot be found despite diligent effort: "Copies of documentary evidence such as internet searches, certified mail return receipts, cover letters of instructions, telegrams, that support a finding that the nonsigning inventor could not be found or reached should be made part of the statement. The steps taken to locate the whereabouts of the nonsigning inventor should be included in the statement of facts. It is important that the statement contain facts as opposed to conclusions.)"

In the present case applicant has not provided any evidence that additional searches were conducted to locate a current address for the non-signing inventor after the initial mailing in applicant's other case was returned. As such, this item cannot be considered satisfied.

Applicant's petition states that Mr. Wood has indicated in his previous dealings with applicant that he would not review nor sign any documents presented to him. A copy of this indication in writing or a signed statement from the individual to whom this information was conveyed would be considered a refusal for the purposes of 37 CFR 1.47.

In light of the above, it is not possible to grant applicant's petition at this time.

CONCLUSION

For the reasons stated above, applicant's petition under 37 CFR 1.47(a) is **DISMISSED**.

Any reconsideration on the merits of this petition must be filed within **TWO (2) MONTHS** from the mail date of this decision. Any reconsideration request should include a cover letter entitled "Renewed Petition Under 37 CFR 1.47(a)." No additional petition fee is required. Extensions of time may be obtained under 37 CFR 1.136(a).

Any further correspondence with respect to this matter should be directed to Mail Stop PCT, Commissioner for Patents, Office of PCT Legal Administration, P.O. Box 1450, Alexandria, Virginia 22313-1450, with the contents of the letter marked to the attention of the Office of PCT Legal Administration or electronically filed utilizing the USPTO's EFS-Web electronic filing system.

Derek A. Putonen
Attorney Advisor
Office of PCT Legal Administration
Tel: 571-272-3294

UNITED STATES PATENT AND TRADEMARK OFFICE

Commissioner for Patents
United States Patent and Trademark Office
Washington, D.C. 20231
www.uspto.gov

MAILED

SEP 23 2011

PCT LEGAL ADMINISTRATION

DECHERT LLP
P.O. BOX 390460
MOUNTAIN VIEW CA 94039-0460

In re Application of
WOOD, et al.
Serial No.: 11/913,377
PCT No.: PCT/US2006/021989
Int. Filing Date: 06 June 2006
Priority Date: 06 June 2005
Atty Docket No.: 374321-02930US (370461)
For: TRUE TIME DELAY PHASE ARRAY RADAR USING ROTARY CLOCKS AND ELECTRONIC DELAY LINES

DECISION ON PETITION

UNDER 37 CFR 1.47(a)

This decision is in response to applicant's renewed petition under 37 CFR 1.47(a) filed 28 August 2011 in the United States Patent and Trademark Office (USPTO).

BACKGROUND

On 31 January 2011, applicant was mailed a decision dismissing applicant's petition under 37 CFR 1.47(a). Applicant was afforded two months to file any request for reconsideration and advised that this period could be extended pursuant to 37 CFR 1.136(a).

On 28 August 2011, applicant filed the present renewed petition under 37 CFR 1.47(a) accompanied by a petition for a five-month extension of time. With payment of the five-month extension of time, applicant's present response is considered timely filed.

DISCUSSION

As detailed in the decision mailed 31 January 2011, a petition under 37 CFR 1.47(a) must be accompanied by (1) the fee under 37 CFR 1.17(g), (2) factual proof that the missing joint investor refuses to execute the application or cannot be reached after diligent effort, (3) a statement of the last known address of the missing inventor, and (4) an oath or declaration by each 37 CFR 1.47(a) applicant on his or her own behalf and on behalf of the non-signing joint inventor. Applicant previously satisfied items 1, 3 and 4.

With the filing of the renewed petition and accompanying exhibits applicant has satisfied the remaining item and it is therefore proper to grant applicant's petition at this time. It is clear from the supporting material that applicant has attempted to obtain the signature of the subject inventor to no avail.

For the reasons stated above, applicant's petition under 37 CFR 1.47(a) is **GRANTED**.

The application has an international filing date of 06 June 2006 under 35 U.S.C. 363, and will be given a date of **27 December 2010** under 35 U.S.C. 371(c)(1), (c)(2) and (c)(4).

As provided in 37 CFR 1.47(c), a notice of the filing of this application will be forwarded to the non-signing inventor at his last known address of record. A notice of the filing of the application under 37 CFR 1.47(a) will be published in the Official Gazette.

This application is being returned to the DO/EO/US for processing in accordance with this decision.

Derek A. Putonen
Attorney Advisor
Office of PCT Legal Administration
Tel: 571-272-3294

UNITED STATES PATENT AND TRADEMARK OFFICE

Commissioner for Patents
United States Patent and Trademark Office
P.O. Box 1450
Alexandria, VA 22313-1450
www.uspto.gov

Mr. John Wood
215 First Avenue
Santa Cruz, CA 95062

MAILED
SEP 23 2011
PCT LEGAL ADMINISTRATION

In re Application of
WOOD, et al.
Serial No.: 11/913,377
PCT No.: PCT/US2006/021989
Int. Filing Date: 06 June 2006
Priority Date: 06 June 2005
Atty Docket No.: 374321-02930US (370461)
For: TRUE TIME DELAY PHASE ARRAY RADAR USING ROTARY CLOCKS AND ELECTRONIC DELAY LINES

Dear Mr. Wood:

You are named as an inventor in the above identified United States patent application, filed under the provisions of 37 CFR 1.47(a) and 35 U.S.C. 116. Should a patent be granted, you will be designated as an inventor. As a named inventor, you are entitled to inspect any paper in the file wrapper of the application, order copies of all or any part thereof (at a prepaid cost per 37 CFR 1.19) or to make your position of record in the application. Alternately, you may arrange to do any of the preceding through a registered patent agent or attorney presenting written authorization from you. If you care to join in the application, the law firm of record (see below) would presumably assist you. Joining in the application would entail the filing of the appropriate oath or declaration by you pursuant to 37 CFR 1.63.

Derek A. Putonen
Attorney Advisor
Office of PCT Legal Administration
Tel: (571) 272-3294

Counsel of Record:
DECHERT LLP
P.O. BOX 390460
MOUNTAIN VIEW CA 94039-0460

Doc Code: PET.AUTO **Document Description: Petition automatically granted by EFS-Web**	PTO/SB/83 U.S. Patent and Trademark Office Department of Commerce

Electronic Petition Request	**REQUEST FOR WITHDRAWAL AS ATTORNEY OR AGENT AND CHANGE OF CORRESPONDENCE ADDRESS**
Application Number	11913377
Filing Date	27-Dec-2010
First Named Inventor	John Wood
Art Unit	3646
Examiner Name	JACK KEITH
Attorney Docket Number	4004-0014
Title	TRUE TIME DELAY PHASE ARRAY RADAR USING ROTARY CLOCKS AND ELECTRONIC DELAY LINES

◉ Please withdraw me as attorney or agent for the above identified patent application and the practitioners of record associated with Customer Number: 75948

The reason(s) for this request are those described in 37 CFR:

10.40(b)(4)

Certifications

☒ I/We have given reasonable notice to the client, prior to the expiration of the response period, that the practitioner(s) intend to withdraw from employment

☒ I/We have delivered to the client or a duly authorized representative of the client all papers and property (including funds) to which the client is entitled

☒ I/We have notified the client of any responses that may be due and the time frame within which the client must respond

Change the correspondence address and direct all future correspondence to:
The address of the first named inventor or assignee that has properly made itself of record pursuant to 37 CFR 3.71, associated with Customer Number: 20995

I am authorized to sign on behalf of myself and all withdrawing practitioners.

Signature	/Brian Siritzky/
Name	Brian Siritzky
Registration Number	37497

UNITED STATES PATENT AND TRADEMARK OFFICE

Commissioner for Patents
United States Patent and Trademark Office
P.O. Box 1450
Alexandria, VA 22313-1450
www.uspto.gov

Decision Date : April 13, 2012

In re Application of :

John Wood

Application No : 11913377

Filed : 27-Dec-2010

Attorney Docket No : 4004-0014

DECISION ON REQUEST TO WITHDRAW AS ATTORNEY/AGENTOF RECORD

This is an electronic decision on the Request to Withdraw as attorney or agent of record under 37 CFR§ 1.36(b), filed April 13, 2012

The request is **APPROVED**

The request was signed by Brian Siritzky (registration no. 37497) on behalf of all attorneys/agents associated with Customer Number 75948 . All attorneys/agents associated with Customer Number 75948 have been withdrawn.

Since there are no remaining attorneys of record, all future communications from the Office will be directed to the first named inventor or assignee that has properly made itself of record pursuant to 37 CFR 3.71, with Customer number 20995 .

As a reminder, requester is required to inform the first named inventor or assignee that has properly made itself of record pursuant to 37 CFR 3.71 of the electronically processed petition.

Telephone inquiries concerning this decision should be directed to the Patent Electronic Business Center (EBC) at 866-217-9197.

Office of Petitions

UNITED STATES PATENT AND TRADEMARK OFFICE

Commissioner for Patents
United States Patent and Trademark Office
P.O. Box 1450
Alexandria, VA 22313-1450
www.uspto.gov

CUSTOMER NO. 70416
PERKINS COIE LLP
PATENT - LA
P.O. BOX 1208
SEATTLE WA 98111 - 1208

MAILED

DEC 07 2010

OFFICE OF PETITIONS

In re Application of
Kisanrao Vijaykumar WAKCHAURE
Application No. 11/913,410
Filed: November 1, 2007
Attorney Docket No. 02104.8003.US00

DECISION ON PETITION

This is a decision on the petition under the unintentional provisions of 37 CFR 1.137(b), filed November 3, 2010, to revive the above-identified application.

The petition is **GRANTED**.

The application became abandoned for failure to timely file corrected drawings on or before October 12, 2010, as required by the Notice of Allowance and Fee(s) Due, mailed July 12, 2010, which set a statutory period for reply of three (3) months. Accordingly, the application became abandoned on October 13, 2010.

The petition satisfies the requirements of 37 CFR 1.137(b) in that petitioner has supplied (1) the reply in the form of replacement drawings; (2) the petition fee of $1620; and (3) a proper statement of unintentional delay.

The Examiner assigned to this application has approved the drawings filed with the petition on November 3, 2010.

There is no indication that the person signing the petition was ever given a power of attorney to prosecute the application. If the person signing the petition desires to receive future correspondence regarding this application, the appropriate power of attorney document must be submitted. While a courtesy copy of this decision is being mailed to the person signing the petition, all future correspondence will be directed to the address currently of record until appropriate instructions are received.

Telephone inquiries concerning this decision should be directed to the undersigned at (571) 272-6735.

The application is being referred to the Office of Data Management for processing into a patent.

/Diane C. Goodwyn/
Diane C. Goodwyn
Petitions Examiner
Office of Petitions

Cc: AARON WININGER
PERKINS COIE LLP
1201 THIRD AVENUE
SUITE 4800
SEATTLE, WA 98101-3099

UNITED STATES PATENT AND TRADEMARK OFFICE

Commissioner for Patents
United States Patent and Trademark Office
P.O. Box 1450
Alexandria, VA 22313-1450
www.uspto.gov

MAILED

APR 07 2011

OFFICE OF PETITIONS

FULBRIGHT & JAWORSKI, LLP
1301 MCKINNEY
SUITE 5100
HOUSTON TX 77010-3095

In re Application of	:	
VERRI LIMA, Gaston Jeronimo	:	
Application No. 11/913,448	:	DECISION ON PETITION
Filed: May 02, 2006	:	TO WITHDRAW
Attorney Docket No. **HO-P03543US0**	:	FROM RECORD
	:	

This is a decision on the Request to Withdraw as attorney or agent of record under 37 C.F.R. § 1.36(b), filed February 03, 2011.

The request is **APPROVED**.

A grantable request to withdraw as attorney/agent of record must be signed by every attorney/agent seeking to withdraw or contain a clear indication that one attorney is signing on behalf of another/others. The Office requires the practitioner(s) requesting withdrawal to certify that he, she, or they have: (1) given reasonable notice to the client, prior to the expiration of the response period, that the practitioner(s) intends to withdraw from employment; (2) delivered to the client or a duly authorized representative of the client all papers and property (including funds) to which the client is entitled; and (3) notified the client of any responses that may be due and the time frame within which the client must respond, pursuant 37 CFR 10.40(c).

The request was signed by Jan K. Simpson on behalf of all attorneys of record who are associated with customer No. 26271. All attorneys/agents associated have been withdrawn. Applicant is reminded that there is no attorney of record at this time.

All future correspondence will be directed to the first named inventor Gaston Jeronimo Verri Lima at the address indicated below.

There are no outstanding Office actions at this time.

Telephone inquiries concerning this decision should be directed to the undersigned at 571-272-4231.

Michelle R. Eason
Paralegal Specialist
Office of Petitions

cc: **GASTON JERONIMO VERRI LIMA**
MERCEDES 1556 – OF. 106
MONTEVIDEO, URUGUAY

UNITED STATES PATENT AND TRADEMARK OFFICE

Commissioner for Patents
United States Patent and Trademark Office
P.O. Box 1450
Alexandria, VA 22313-1450
www.uspto.gov

KNOBBE MARTENS OLSON & BEAR LLP
2040 MAIN STREET
FOURTEENTH FLOOR
IRVINE CA 92614

MAILED
OCT 08 2010
OFFICE OF PETITIONS

In re Application of	:	
Miyuki Tanaka, et al.	:	
Application No. 11/913,758	:	DECISION GRANTING PETITION
Filed: November 6, 2007	:	UNDER 37 CFR 1.313(c)(2)
Attorney Docket No. TOYA108.020APC	:	

This is a decision on the petition under 37 CFR 1.313(c)(2), filed, October 7, 2010 to withdraw the above-identified application from issue after payment of the issue fee.

The petition is **GRANTED**.

The above-identified application is withdrawn from issue for consideration of a submission under 37 CFR 1.114 (request for continued examination). *See* 37 CFR 1.313(c)(2).

Petitioner is advised that the issue fee paid on September 2, 2010 cannot be refunded. If, however, this application is again allowed, petitioner may request that it be applied towards the issue fee required by the new Notice of Allowance.[1]

Telephone inquiries should be directed to Terri Johnson at (571) 272-2991.

This application is being referred to Technology Center AU 1627 for processing of the request for continued examination under 37 CFR 1.114 and for consideration of the concurrently filed information disclosure statement.

/Terri Johnson/
Terri Johnson
Petitions Examiner
Office of Petitions

---

[1] *The request to apply the issue fee to the new Notice may be satisfied by completing and returning the new Part B – Fee(s) Transmittal Form (along with any balance due at the time of submission). Petitioner is advised that the Issue Fee Transmittal Form* ***must*** *be completed and timely submitted to avoid abandonment of the application.*

UNITED STATES PATENT AND TRADEMARK OFFICE

Commissioner for Patents
United States Patent and Trademark Office
P.O. Box 1450
Alexandria, VA 22313-1450
www.uspto.gov

PHILIPS INTELLECTUAL PROPERTY & STANDARDS
P. O. Box 3001
BRIARCLIFF MANOR NY 10510

MAILED

MAY 23 2011

PCT LEGAL ADMINISTRATION

In re Application of
WIECZOREK, et al.
Application No.: 11/913,847
PCT No.: PCT/IB2006/051355
Int. Filing Date: 01 May 2006
Priority Date: 13 May 2005
Attorney Docket No.: PH000902US
For: MULTI-CAP DETECTORS FOR NUCLEAR MEDICINE REFERENCE

DECISION ON PETITION
UNDER 37 CFR 1.78(a)(6)

This decision is issued in response to petition under 37 CFR 1.78(a)(6) filed 09 March 2011 to accept an unintentionally delayed claim under 35 U.S.C. §119(e) for the benefit of the prior-filed provisional application set forth in the Application Data Sheet filed concurrently with the instant petition.

The petition is GRANTED.

A petition under 37 CFR 1.78(a)(6) is only applicable to those applications filed on or after November 29, 2000. Further, the petition is appropriate only after expiration of the period specified in 37 CFR 1.78(a)(5)(ii) and must be filed during the pendency of the nonprovisional application. In addition, the petition must be accompanied by:

(1) the reference required by 35 U.S.C. § 119(e) and 37 CFR 1.78(a)(5)(i) to the prior-filed application, unless previously submitted;
(2) the surcharge set forth in § 1.17(t); and
(3) a statement that the entire delay between the date the claim was due under 37 CFR 1.78(a)(5)(ii) and the date the claim was filed was unintentional. The Director may require additional information where there is a question whether the delay was unintentional.

The instant pending nonprovisional application was filed after November 29, 2000, and the

claim herein for the benefit of priority to the prior-filed provisional application is submitted after expiration of the period specified in 37 CFR 1.78(a)(5)(ii). Therefore, this is a proper petition under 37 CFR 1.78(a)(6).

The petition complies with the requirements for a grantable petition under 37 CFR 1.78(a)(6) in that (1) a reference to the prior-filed provisional application has been included in an Application Data Sheet, as provided by 37 CFR 1.78(a)(5)(iii); (2) the surcharge fee required by 37 CFR 1.17(t) has been submitted; and (3) the petition contains a proper statement of unintentional delay. The statement contained in the instant petition is being construed as the statement required by 37 CFR 1.78 that the entire period of delay was unintentional and petitioner must notify the Office if this is not a correct interpretation of the statement contained in the instant petition.

Accordingly, having found that the instant petition for acceptance of an unintentionally delayed claim for the benefit of priority under 35 U.S.C. § 119(e) to the above-noted, prior-filed provisional application satisfies the conditions of 37 CFR 1.78(a)(6), the petition is granted.

The granting of the petition to accept the delayed benefit claim to the prior-filed application under 37 CFR 1.78(a)(6) should not be construed as meaning that the instant application is entitled to the benefit of the filing date of the prior-filed application. In order for the instant application to be entitled to the benefit of the prior-filed application, all other requirements under 35 U.S.C. §119(e) and 37 CFR 1.78(a)(4) and (a)(5) must be met. Accordingly, the examiner will, in due course, consider this benefit claim and determine whether the instant application is entitled to the benefit of the earlier filing date.

A corrected Filing Receipt, which includes the priority claim to the prior-filed application, accompanies this decision on petition. Any questions concerning this matter may be directed to Derek A. Putonen at (571) 272-3294. All other inquiries concerning either the examination procedures or status of the application should be directed to the Technology Center.

This matter is being referred to Technology Center Art Unit 2884 for further action as deemed appropriate in light of this decision.

Boris Milef
PCT Legal Examiner
Office of PCT Legal Administration

UNITED STATES PATENT AND TRADEMARK OFFICE

Commissioner for Patents
United States Patent and Trademark Office
P.O. Box 1450
Alexandria, VA 22313-1450
www.uspto.gov

ANDREA Q. RYAN
SANOFI-AVENTIS U.S. LLC
1041 ROUTE 202-206
MAIL CODE: D303A
BRIDGEWATER NJ 08807

MAILED
FEB 28 2012
OFFICE OF PETITIONS

In re Patent No. of Kozian et al.	:	DECISION ON REQUEST
Patent No. 8,084,198	:	FOR RECONSIDERATION OF
Issue Date: December 27, 2011	:	PATENT TERM ADJUSTMENT
Application No. 11/913,873	:	and
Filed: May 2, 2008	:	NOTICE OF INTENT TO ISSUE
Docket No. DE2005/018 US PCT	:	CERTIFICATE OF CORRECTION

This is a decision on the "Request for Reconsideration of Patent Term Adjustment Under 37 C.F.R. 1.705(d)," filed February 14, 2012. Patentees request that the patent term adjustment indicated in the patent be corrected from six hundred fifteen (615) days to seven hundred thirty-two (732) days.

The petition to correct the patent term adjustment indicated on the above-identified patent to indicate that the term of the above-identified patent is extended or adjusted to seven hundred thirty-two (732) days is **granted to the extent indicated herein.**

On December 27, 2011, the above-identified application matured into U.S. Patent No. 8,084,198. The instant request for reconsideration filed February 14, 2012 was timely filed within 2 months of the date the patent issued. See § 1.705(d). The Patent issued with a revised Patent Term Adjustment of 615 days. Patentees disagree with the Office's calculation of 409 days of delay by the office in issuing the patent within three years of the date the national stage commenced. Patentees argue the over three year period should be 411 days. In addition, patentees dispute the length of a reduction, pursuant to 37 CFR 1.704(c)(10), of 120 days due to an amendment under Rule 312 being filed on August 10, 2011. Patentees argue it should be 5 days. It is noted a Notice of Allowance was mailed prior to August 10, 2011, on June 22, 2011.

The calculation of delay pursuant to 37 CFR 1.702(b) is based on a national stage commencement date of Tuesday, November 13,

2007, not November 11, 2007, as patentees assert. Per 35 U.S.C. 371(f), at the express request of the applicant, the national stage of processing may be commenced at any time at which the application is in order for such purpose and the applicable requirements of subsection (c) of this section have been complied with.

While early processing was requested, early processing requirements were not met.

The earliest claimed priority date is May 11, 2005. Because the expiration of the 30-month period pursuant to 35 U.S.C. 371(b) fell on Sunday, November 11, 2007, the period expired on the subsequent business day, Tuesday, November 13, 2007, as Monday, November 12, 2007 was a federal holiday. See PCT Rule 80.5. PCT Rules support this conclusion. Accordingly, the commencement date is Tuesday, November 13, 2007. The over three year period begins on November 14, 2010 and ends on December 27, 2011, the date of issuance of the patent, and is 409 days.

A review of the PTA calculations for this application reveals that the PTA was reduced by 120 days for the submission of a Rule 312 amendment on August 10, 2011, after the mailing of the notice of allowance. See 37 CFR 1.704(c)(10). The length of the reduction is incorrect. However, the reduction should be 6 days, not 5 days as argued by patentees.

> 37 CFR 1.704(c)(10) provides that:
>
> Submission of an amendment under § 1.312 or other paper after a notice of allowance has been given or mailed, in which case the period of adjustment set forth in § 1.703 shall be reduced by the lesser of:
>
> (i) The number of days, if any, beginning on the date the amendment under § 1.312 or other paper was filed and ending on the mailing date of the Office action or notice in response to the amendment under § 1.312 or such other paper;
>
> or
>
> (ii) Four months;

Pursuant to 37 CFR 1.704(c)(10), the Office should have entered a period of reduction of 6 days, counting the number of days in the period beginning on August 10, 2011 , the date the Rule 312

amendment was filed, and ending on and including August 15, 2011, the date the Office mailed a Response to Rule 312 Communication. Accordingly the period of reduction of 120 days will be removed and a period of 6 days will be entered in connection with the filing of a Rule 312 amendment on August 10, 2011.

In light thereof, the correct patent term adjustment is 729 days, which is the sum of 349 days of delay under 35 U.S.C. 154(b)(1)(A) and 409 days of B delay, reduced by 29 days of Applicant delay.

The Office will *sua sponte* issue a certificate of correction. Pursuant to 37 CFR 1.322, the Office will not issue a certificate of correction without first providing assignee or patentee an opportunity to be heard. Accordingly, patentees are given **one (1) month or thirty (30) days**, whichever is longer, from the mail date of this decision to respond. No extensions of time will be granted under § 1.136.

Nothing in this decision shall be construed as a waiver of the requirement of 35 U.S.C. 154(b)(4) that any civil action by an applicant dissatisfied with a determination made by the Director under 35 U.S.C. 154(b)(3) be filed in the United States District Court for the District of Columbia within 180 days after the grant of the patent.

The Office acknowledges submission of the $200.00 fee set forth in 37 CFR 1.18(e). No additional fees are required.

The application is being forwarded to the Certificates of Branch for issuance of a certificate of correction. The Office will issue a certificate of correction indicating that the term of the above-identified patent is extended or adjusted **by seven hundred twenty-nine (729)** days.

Telephone inquiries specific to this matter should be directed to the undersigned at (571) 272-3230.

Shirene Willis Brantley

Shirene Willis Brantley
Senior Petitions Attorney
Office of Petitions

Enclosure: Copy of DRAFT Certificate of Correction

UNITED STATES PATENT AND TRADEMARK OFFICE

CERTIFICATE OF CORRECTION

PATENT : 8,084,198 B2

DATED : **December 27, 2011** **DRAFT**

INVENTOR(S) : Kozian et al.

It is certified that error appears in the above-identified patent and that said Letters Patent is hereby corrected as shown below:

On the cover page,

[*] Notice: Subject to any disclaimer, the term of this patent is extended or adjusted under 35 U.S.C. 154(b) by 615 days

Delete the phrase "by 615 days" and insert – by 729 days--

UNITED STATES PATENT AND TRADEMARK OFFICE

Commissioner for Patents
United States Patent and Trademark Office
P.O. Box 1450
Alexandria, VA 22313-1450
www.uspto.gov

MOTOROLA MOBILITY, INC
600 NORTH US HIGHWAY 45
W2-55BB
LIBERTYVILLE IL 60048-5343

MAILED
AUG 25 2011
OFFICE OF PETITIONS

In re Application of	:	
Bedekar et al.	:	
Application No. 11/913,937	:	DECISION ON PETITION
Filed: November 9, 2007	:	
Attorney Docket No. CE14028R	:	

This is a decision on the petition under the unintentional provisions of 37 CFR 1.137(b), filed July 25, 2011, to revive the above-identified application.

The petition is **GRANTED**.

The application became abandoned for failure to reply in a timely manner to the non-final Office action mailed, November 10, 2010, which set a shortened statutory period for reply of three (3) months. No extensions of time under the provisions of 37 CFR 1.136(a) were obtained. Accordingly, the application became abandoned on February 11, 2011. A Notice of Abandonment was mailed June 10, 2011.

The petition satisfies the requirements of 37 CFR 1.137(b) in that petitioner has supplied (1) the reply in the form of an Amendment, (2) the petition fee of $1,620.00, and (3) a proper statement of unintentional delay.

Telephone inquiries concerning this decision should be directed to the undersigned at (571) 272-7751.

This application is being referred to Technology Center AU 2441 for appropriate action by the Examiner in the normal course of business on the reply received.

/Joan Olszewski/
Joan Olszewski
Petitions Examiner
Office of Petitions

UNITED STATES PATENT AND TRADEMARK OFFICE

Commissioner for Patents
United States Patent and Trademark Office
P.O. Box 1450
Alexandria, VA 22313-1450
www.uspto.gov

MOTOROLA MOBILITY, INC
600 NORTH US HIGHWAY 45
W2-55BB
LIBERTYVILLE IL 60048-5343

MAILED
AUG 02 2011
OFFICE OF PETITIONS

In re Application of	:	
Anand S. BEDEKAR et al.	:	
Application No. 11/913,944	:	DECISION ON PETITION
Filed: November 09, 2007	:	
Attorney Docket No. CE14115R	:	

This is a decision on the petition under the unintentional provisions of 37 CFR 1.137(b), filed July 06, 2011, to revive the above-identified application.

The petition is **GRANTED**.

The application became abandoned for failure to reply in a timely manner to the non-final Office action mailed, November 10, 2010, which set a shortened statutory period for reply of three (3) months. No extensions of time under the provisions of 37 CFR 1.136(a) were obtained. Accordingly, the application became abandoned on February 11, 2010.

The petition satisfies the requirements of 37 CFR 1.137(b) in that petitioner has supplied (1) the reply in the form of an amendment, (2) the petition fee of $1,620.00, and (3) a proper statement of unintentional delay. Accordingly, the reply to the non-final Office action of August 13, 2010 is accepted as having been unintentionally delayed.

Telephone inquiries concerning this decision should be directed to the undersigned at (571) 272-4231.

This application is being referred to Technology Center AU 2462 for appropriate action by the Examiner in the normal course of business on the reply received

Michelle R. Eason
Paralegal Specialist
Office of Petitions

SPE RESPONSE FOR CERTIFICATE OF CORRECTION

Paper No.: ——

DATE : 4/12/2011

TO SPE OF : ART UNIT 2882

SUBJECT : Request for Certificate of Correction for Appl. No.: 11/913975 Patent No.: 7784876 B2

CofC mailroom date: 4/5/2011

Please respond to this request for a certificate of correction within 7 days.

FOR IFW FILES:

Please review the requested changes/corrections as shown in the **COCIN** document(s) in the IFW application image. No new matter should be introduced, nor should the scope or meaning of the claims be changed.

Please complete the response (see below) and forward the completed response to scanning using document code **COCX**.

FOR PAPER FILES:

Please review the requested changes/corrections as shown in the attached certificate of correction. Please complete this form (see below) and forward it with the file to:

Certificates of Correction Branch (CofC)
Randolph Square – 9D10-A
Palm Location 7580

Virginia Tolbert
Certificates of Correction Branch
571-272-0460

Thank You For Your Assistance

The request for issuing the above-identified correction(s) is hereby:
Note your decision on the appropriate box.

- [X] **Approved** — **All** changes apply.
- [ ] **Approved in Part** — Specify below which changes **do not** apply.
- [ ] **Denied** — State the reasons for denial below.

Comments: _____

/Edward J. Glick/ GAU 2882

SPE **Art Unit**

UNITED STATES PATENT AND TRADEMARK OFFICE

Commissioner for Patents
United States Patent and Trademark Office
P.O. Box 1450
Alexandria, VA 22313-1450
www.uspto.gov

YOUNG & THOMPSON
209 MADISON STREET
SUITE 500
ALEXANDRIA, VA 22314

MAILED

MAR 28 2011

OFFICE OF PETITIONS

In re Application of
Terry Dole
Application No. 11/913,998
Filed: January 9, 2008
Attorney Docket No. 0512-1436

DECISION ON PETITION
TO WITHDRAW
FROM RECORD

This is a decision on the Request to Withdraw as attorney or agent of record under 37 C.F.R. § 1.36(b), filed February 11, 2011.

The request is **NOT APPROVED**.

A grantable request to withdraw as attorney/agent of record must be signed by every attorney/agent seeking to withdraw or contain a clear indication that one attorney is signing on behalf of another/others.

The request cannot be approved because the practitioner(s) requesting the withdrawal have not certified that they (1) have given reasonable notice to the client, prior to the expiration of the response period, that the practitioner(s) intend to withdraw from employment, (2) have delivered to the client or a duly authorized representative of the client all papers and property (including funds) to which the client is entitled, (3) have notified the client of any responses that may be due and the time frame within which the client must respond. The failure to do so may subject the practitioner to discipline. It is also noted that false certification may violate a practitioners' duty under 37 CFR 10.23(b)(4) and (b)(5).

In order to request or take action in a patent matter, the assignee must establish its ownership of the patent to the satisfaction of the Director. In this regard, a Statement under 37 CFR 3.73(b) must have either: (i) documentary evidence of a chain of title from the original owner to the assignee (e.g., copy of an executed assignment), and a statement affirming that the documentary evidence of the chain of title from the original owner to the assignee was or concurrently is being submitted for recordation pursuant to § 3.11; or (ii) a statement specifying where documentary evidence of a chain of title from the original owner to the assignee is recorded in the assignment records of the Office (e.g., reel and frame number).

Petitioner should also note that the Office will no longer accept address changes to a new practitioner of law firm filed with a Request, absent the filing of a power of attorney to the new representative. The Office will either change the correspondence address of record to the most current address information provided for the assignee of the entire interest who properly became of record under 37 CFR 3.71 or, the most current address information provided for the first named inventor.

Accordingly, the request to withdraw from record does not include an acceptable current correspondence address for future communications from the Office.

Additionally, as set forth in MPEP 403(I), the addition or deletion of a practitioner from the list of persons associated with a Customer Number should be done by way of a Request for Customer Number Data Change (PTO/SB/124) and not a Request for Withdrawal As Attorney or Agent and Change of Correspondence Address (Form PTO/SB/83).

All future communications from the Office will continue to be directed to the above-listed address until otherwise notified by applicant.

Telephone inquiries concerning this decision should be directed to undersigned at 571-272-1642. All other inquiries concerning the examination or status of this application should be directed to the Technology Center.

/AMW/
April M. Wise
Petitions Examiner
Office of Petitions

UNITED STATES PATENT AND TRADEMARK OFFICE

Commissioner for Patents
United States Patent and Trademark Office
P.O. Box 1450
Alexandria, VA 22313-1450
www.uspto.gov

FOLEY HOAG, LLP
PATENT GROUP, WORLD TRADE CENTER WEST
155 SEAPORT BLVD
BOSTON MA 02110

MAILED

JUN 02 2011

OFFICE OF PETITIONS

In re Application of	:	
Philip R. Cunningham	:	
Application No. 11/914,062	:	DECISION ON PETITION
Filed: June 30, 2008	:	TO WITHDRAW
Attorney Docket No. **WSS-004.01**	:	FROM RECORD
	:	

This is a decision on the Request to Withdraw as attorney or agent of record under 37 CFR § 1.36(b), filed May 23, 2011.

The request is **APPROVED**.

A grantable request to withdraw as attorney/agent of record must be signed by every attorney/agent seeking to withdraw or contain a clear indication that one attorney is signing on behalf of another/others. The Office requires the practitioner(s) requesting withdrawal to certify that he, she, or they have: (1) given reasonable notice to the client, prior to the expiration of the response period, that the practitioner(s) intends to withdraw from employment; (2) delivered to the client or a duly authorized representative of the client all papers and property (including funds) to which the client is entitled; and (3) notified the client of any responses that may be due and the time frame within which the client must respond , pursuant to 37 CFR 10.40.

The request was signed by Janine S. Ladislaw on behalf of all attorneys of record who are associated with Customer Number 25181.

All attorneys/agents associated with Customer Number 25181 have been withdrawn.

Applicant is reminded that there is no attorney of record at this time.

The correspondence address of record has been changed and all future correspondence will be directed to the assignee of the entire interest at the address indicated below.

There is no outstanding Office action mailed that requires a reply from the applicant.

Telephone inquiries concerning this decision should be directed to the undersigned at 571-272-4584.

JoAnne Burke
Petitions Examiner
Office of Petitions

cc: Wayne State University
Technology Transfer Office
5057 Woodward Avenue, Suite 6306
Detroit, MI 48202

UNITED STATES PATENT AND TRADEMARK OFFICE

UNITED STATES DEPARTMENT OF COMMERCE
United States Patent and Trademark Office
Address: COMMISSIONER FOR PATENTS
P.O. Box 1450
Alexandria, Virginia 22313-1450
www.uspto.gov

APPLICATION NUMBER	FILING OR 371(C) DATE	FIRST NAMED APPLICANT	ATTY. DOCKET NO./TITLE
11/914,062	06/30/2008	Philip R. Cunningham	WSS-004.01

CONFIRMATION NO. 2690

POWER OF ATTORNEY NOTICE

25181
FOLEY HOAG, LLP
PATENT GROUP, WORLD TRADE CENTER WEST
155 SEAPORT BLVD
BOSTON, MA 02110

OC000000047998204

Date Mailed: 06/02/2011

NOTICE REGARDING CHANGE OF POWER OF ATTORNEY

This is in response to the Power of Attorney filed 05/23/2011.

- The withdrawal as attorney in this application has been accepted. Future correspondence will be mailed to the new address of record. 37 CFR 1.33.

/jlburke/

Office of Data Management, Application Assistance Unit (571) 272-4000, or (571) 272-4200, or 1-888-786-0101

UNITED STATES PATENT AND TRADEMARK OFFICE

Commissioner for Patents
United States Patent and Trademark Office
P.O. Box 1450
Alexandria, VA 22313-1450
www.uspto.gov

FOLEY HOAG, LLP
PATENT GROUP, WORLD TRADE CENTER WEST
155 SEAPORT BLVD
BOSTON, MA 02110

MAILED

JUN 15 2011

OFFICE OF PETITIONS

In re Application of	:	
Philip R. Cunningham	:	
Application No. 11/914,077	:	DECISION ON PETITION
Filed: June 30, 2008	:	TO WITHDRAW FROM
Attorney Docket No. WSS-003.01	:	RECORD

This is a decision on the Request to Withdraw as attorney or agent of record under 37 CFR §§ 1.36(b) or 10.40 filed May 23, 2011.

The request is **APPROVED**.

The request was signed by Janine S. Ladislaw on behalf of herself and all attorneys/agents associated with Customer Number 25181. Therefore, Janine S. Ladislaw and all the attorneys/agents associated with Customer Number 25181 have been withdrawn.

Applicant is reminded that there are no attorneys/agents of record at this time.

There is an outstanding Office action mailed on April 7, 2011, that requires a reply from applicant.

All future communications from the Office will be directed to the address listed below until otherwise properly notified by the applicant.

Telephone inquiries concerning this decision should be directed to the undersigned at (571) 272-3226.

Andrea Smith
Petitions Examiner
Office of Petitions

cc: Wayne State University
Technology Transfer Office
5057 Woodward Avenue, Suite 6306
Detroit, MI 48202

UNITED STATES PATENT AND TRADEMARK OFFICE

UNITED STATES DEPARTMENT OF COMMERCE
United States Patent and Trademark Office
Address: COMMISSIONER FOR PATENTS
P.O. Box 1450
Alexandria, Virginia 22313-1450
www.uspto.gov

APPLICATION NUMBER	FILING OR 371(C) DATE	FIRST NAMED APPLICANT	ATTY. DOCKET NO./TITLE
11/914,077	06/30/2008	Philip R. Cunningham	WSS-003.01

CONFIRMATION NO. 2852

POWER OF ATTORNEY NOTICE

25181
FOLEY HOAG, LLP
PATENT GROUP, WORLD TRADE CENTER WEST
155 SEAPORT BLVD
BOSTON, MA 02110

OC000000048139713

Date Mailed: 06/10/2011

NOTICE REGARDING CHANGE OF POWER OF ATTORNEY

This is in response to the Power of Attorney filed 05/23/2011.

- The withdrawal as attorney in this application has been accepted. Future correspondence will be mailed to the new address of record. 37 CFR 1.33.

/amsmith/

Office of Data Management, Application Assistance Unit (571) 272-4000, or (571) 272-4200, or 1-888-786-0101

UNITED STATES PATENT AND TRADEMARK OFFICE

Commissioner for Patents
United States Patent and Trademark Office
P.O. Box 1450
Alexandria, VA 22313-1450
www.uspto.gov

SHERR & VAUGHN, PLLC
620 HERNDON PARKWAY
SUITE 320
HERNDON, VA 20170

MAILED

DEC 22 2010

OFFICE OF PETITIONS

In re Application of	:	
Naoto Yamano	:	
Application No. 11/914,110	:	DECISION GRANTING PETITION
Filed: February 9, 2008	:	UNDER 37 CFR 1.313(c)(2)
Attorney Docket No. 412-0007	:	

This is a decision on the petition under 37 CFR 1.313(c)(2), filed December 20, 2010, to withdraw the above-identified application from issue after payment of the issue fee.

The petition is **GRANTED**.

The above-identified application is withdrawn from issue for consideration of a submission under 37 CFR 1.114 (request for continued examination). *See* 37 CFR 1.313(c)(2).

Petitioner is advised that the issue fee paid on November 19, 2010 cannot be refunded. If, however, this application is again allowed, petitioner may request that it be applied towards the issue fee required by the new Notice of Allowance.[1]

The petition is not signed by an attorney of record. Nevertheless, in accordance with 37 CFR 1.34, the signature of Mr. Todd A. Vaughn appearing on the correspondence shall constitute a representation to the United States Patent and Trademark Office that he is authorized to represent the particular party on whose behalf he acts. If Mr. Vaughn desires to receive future correspondence regarding this file, the appropriate power of attorney documents must be submitted. All future correspondence regarding this application file will be directed solely to the above-noted correspondence address of record.

Telephone inquiries regarding this decision should be directed to undersigned at (571) 272-1642. All other inquiries concerning the examination or status of this application should be directed to the Technology Center.

---

[1] *The request to apply the issue fee to the new Notice may be satisfied by completing and returning the new Part B – Fee(s) Transmittal Form (along with any balance due at the time of submission). Petitioner is advised that the Issue Fee Transmittal Form must be completed and timely submitted to avoid abandonment of the application.*

This application is being referred to Technology Center AU 2612 for processing of the request for continued examination under 37 CFR 1.114 and for consideration of the concurrently filed information disclosure statement.

/AMW/
April M. Wise
Petitions Examiner
Office of Petitions

UNITED STATES PATENT AND TRADEMARK OFFICE

Commissioner for Patents
United States Patent and Trademark Office
P.O. Box 1450
Alexandria, VA 22313-1450
www.uspto.gov

AMIN TALATI, LLC
225 North Michigan Avenue
Suite 700
CHICAGO IL 60601

MAILED
NOV 05 2010
OFFICE OF PETITIONS

In re Application of

Shilpan Pravinchandra Patel
Application No. 11/914,132
Filed: November 9, 2007
Attorney Docket No. ACP-101

DECISION ON PETITION
TO WITHDRAW
FROM RECORD

This is a decision on the Request to Withdraw as attorney or agent of record under 37 C.F.R. § 1.36(b), filed October 6, 2010.

The request is **APPROVED**.

A grantable request to withdraw as attorney/agent of record must be signed by every attorney/agent seeking to withdraw or contain a clear indication that one attorney is signing on behalf of another/others. A request to withdraw will not be approved unless at least 30 (thirty) days would remain between the date of approval and the later of the expiration date of a time to file a response or the expiration date of the maximum time period which can be extended under 37 C.F.R. § 1.136(a).

The request was signed by Janine A. Moderson on behalf of all attorneys/agents associated with customer number 51079. All attorneys/agents associated with customer number 51079 have been withdrawn.

The correspondence address has been changed and is copied below.

Telephone inquiries concerning this decision should be directed to Kimberly Inabinet at 571-272-4618.

/Kimberly Inabinet/

Kimberly Inabinet
Petitions Examiner
Office of Petitions

cc: Shilpan Pravinchandra Patel
A-303, Suman Apts., III Cross Lane
Lakhandwala Comples, Andheri (West)
Mumbai, Maharashtra 400053
INDIA

UNITED STATES PATENT AND TRADEMARK OFFICE

UNITED STATES DEPARTMENT OF COMMERCE
United States Patent and Trademark Office
Address: COMMISSIONER FOR PATENTS
P.O. Box 1450
Alexandria, Virginia 22313-1450
www.uspto.gov

APPLICATION NUMBER	FILING OR 371(C) DATE	FIRST NAMED APPLICANT	ATTY. DOCKET NO./TITLE
11/914,132	11/09/2007	Shilpan Pravinchandra Patel	ACP-101

CONFIRMATION NO. 3520

POWER OF ATTORNEY NOTICE

51079
AMIN TALATI, LLC
225 North Michigan Avenue
Suite 700
CHICAGO, IL 60601

OC000000044370660

Date Mailed: 11/05/2010

NOTICE REGARDING CHANGE OF POWER OF ATTORNEY

This is in response to the Power of Attorney filed 10/06/2010.

- The withdrawal as attorney in this application has been accepted. Future correspondence will be mailed to the new address of record. 37 CFR 1.33.

/kainabinet/

Office of Data Management, Application Assistance Unit (571) 272-4000, or (571) 272-4200, or 1-888-786-0101

UNITED STATES PATENT and TRADEMARK OFFICE

COMMISSIONER FOR PATENTS
UNITED STATES PATENT AND TRADEMARK OFFICE
P.O BOX 1450
ALEXANDRIA, VA 22313-1450
www.uspto.gov

SUGHRUE MION PLLC
2100 PENNSYLVANIA AVENUE, N.W.
SUITE 800
WASHINGTON, DC 20037

MAILED
OCT 27 2010
PCT LEGAL ADMINISTRATION

In re Application of	:	DECISION ON
DESORBAY et al	:	
Application No: 11/914,181	:	
PCT No.: PCT/EP2006/005307	:	
Int. Filing Date: 03 April 2006	:	PETITION UNDER
Priority Date: 13 May 2005	:	
Attorney's Docket No.: Q104925	:	
For: IMPROVED CORE ... UNC APPLICATIONS	:	37 CFR 1.47(a)

This is in response to the "SECOND REQUEST FOR RECONSIDERATION OF DECISION DENYING PETITION UNDER 37 CFR 1.47(a)" filed on 23 August 2010.

BACKGROUND

In a decision from this Office on 16 March 2009, the initial petition under 37 CFR 1.47(a) was dismissed. The decision stated that items (2) and (3) have not been satisfied.

On 23 August 2010, petitioner submitted a "Second Request for Reconsideration... Petition Under 37 CFR 1.47(a)" requesting reconsideration of the Office's decision of 22 January 2010 with respect to accepting the above application without the signature of Mr. Patel.

DISCUSSION

A petition under 37 CFR 1.47(a) must be accompanied by (1) the fee under 37 CFR 1.17(g), (2) factual proof that the missing joint inventor refuses to execute the application or cannot be reached after diligent effort, (3) a statement of the last known address of the missing inventor, and (4) an oath or declaration by each 37 CFR 1.47(a) applicant on his or her own behalf and on behalf of the non-signing joint inventor.

Furthermore, section 409.03(d) of the Manual of Patent Examining Procedure (M.P.E.P.) **Proof of Unavailability or Refusal**, the relevant sections states, in part:

REFUSAL TO JOIN:

A refusal by an inventor to sign an oath or declaration when the inventor has not been presented with the application papers does not itself suggest that the inventor is refusing to join the application unless it is clear that the inventor understands exactly what he or she is being asked to sign and

refuses to accept the application papers. A copy of the application papers should be sent to the last known address of the nonsigning inventor, or, if the nonsigning inventor is represented by counsel, to the address of the nonsigning inventor's attorney. The fact that an application may contain proprietary information does not relieve the **37 CFR 1.47** applicant of the responsibility to present the application papers to the inventor if the inventor is willing to receive the papers in order to sign the oath or declaration. It is noted that the inventor may obtain a complete copy of the application, unless the inventor has assigned his or her interest in the application, and the assignee has requested that the inventor not be permitted access. See **MPEP § 106**. It is reasonable to require that the inventor be presented with the application papers before a petition under **37 CFR 1.47** is granted since such a procedure ensures that the inventor is apprised of the application to which the oath or declaration is directed. *In re Gray*, 115 USPQ 80 (Comm'r Pat. 1956).

Where a refusal of the inventor to sign the application papers is alleged, the circumstances of the presentation of the application papers and of the refusal must be specified in a statement of facts by the person who presented the inventor with the application papers and/or to whom the refusal was made. Statements by a party not present when an oral refusal is made will not be accepted.

Proof that a *bona fide* attempt was made to present a copy of the application papers (specification, including claims, drawings, and oath or declaration) to the nonsigning inventor for signature, but the inventor refused to accept delivery of the papers or expressly stated that the application papers should not be sent, may be sufficient. When there is an express oral refusal, that fact along with the time and place of the refusal must be stated in the statement of facts. When there is an express written refusal, a copy of the document evidencing that refusal must be made part of the statement of facts. The document may be redacted to remove material not related to the inventor's reasons for refusal.

When it is concluded by the **37 CFR 1.47** applicant that a nonsigning inventor's conduct constitutes a refusal, all facts upon which that conclusion is based should be stated in the statement of facts in support of the petition or directly in the petition. If there is documentary evidence to support facts alleged in the petition or in any statement of facts, such evidence should be submitted. Whenever a nonsigning inventor gives a reason for refusing to sign the application oath or declaration, that reason should be stated in the petition.

Petitioner has satisfied items (1) and, (3)- (4) of 37 CFR 1.47(a). However, item (2) of 37 CFR 1.47(a) has still not been satisfied.

Regarding requirement (2), Mr. Cushing has still not presented a declaration from a person who has first hand knowledge of the facts. Item 2 of 37 CFR 1.47(a) requires that the circumstances of the presentation of the application papers and of refusal must be specified in a statement of facts by the person who presented the inventor with the application papers and in this instance it was the assignee and not Mr. Cushing who performed the actions described in his declaration filed on 12/08/08 section 4.

As stated in the previous decision, Mr. Cushing is not the person who performed those actions listed in his petition filed on 08 December 2008, and does not have first hand knowledge of those facts as required by MPEP Section 409.03(d) since the cover letter is signed by Mr. Gudin and mailing appears to have been done by the assignee. Petitioner will need to submit statements, with specific facts on the actions referred to by the petition, page 2, by persons who have first-hand knowledge of such facts.

On the declaration filed on 8/05/08 by Mr. Cushing in section 5 stated that, "[Mr. Patel] current address is unknown and Mr. Cushing further stated the Mr. Patel is no longer employed by Alcatel Lucent." Petitioner now states at the bottom of page 2, "[i]t is clear in hindsight that the address used for Mr. Patel was correct, and he has twice declined to execute and return the declaration." He states that copy of the application was sent to his known address of the inventor in August of 2008, delivery was confirmed. He has now provided a English translation of this delivery but nowhere does it state that somebody signed for the package or the signature was required. In fact, in the section "Lieu" front door, if the package was just left at the front door without a signature then it can not be concluded that it was received by Mr. Patel. So it is unclear how delivery was confirmed if no evidence has been provided that it was indeed received by someone at such address such as a signature of receipt.

Where the Office is being asked to accept the silence of the nonsigning inventor's as evidence of a refusal to sign, petitioner must provide some evidence that the application materials have been received by the nonsigning applicant. Absent further firsthand evidence that the application and request for signature were received by the nonsigning inventor, item (2) cannot be considered satisfied.

If Patel is currently residing in his last known address as currently stated, then there is no need to conduct a bona fide search to locate him.

Accordingly, at this time it can not be concluded that the nonsigning Mr. Patel refuses to sign the required papers or could not be reached after diligent effort as stipulated under 37 CFR 1.47(a).

Regarding requirement (3), petitioner has provided an affirmative statement of the last known address of the missing inventor.

2213 Whitney Lane
McKinney, Texas 75070

Accordingly, the petition has not met the requirements under 37 CFR 1.47(a).

DECISION

The petition under 37 CFR 1.47(a) is **DISMISSED** without prejudice.

If reconsideration of the merits of the petition under 37 CFR 1.47(a) is desired, applicant must file a request for reconsideration within **TWO (2) MONTHS** from the mail date of this Decision. Any reconsideration request should include a cover letter entitled "Renewed Petition Under 37 CFR 1.47(a)." Extensions of time are available under 37 CFR 1.136(a). Failure to timely file the proper response will result in ABANDONMENT.

Any further correspondence with respect to this matter may be filed electronically via EFS-Web selecting the document description "Petition for review and processing by the PCT Legal Office" or by mail addressed to Mail Stop PCT, Commissioner for Patents, Office of PCT Legal Administration, P.O. Box 1450, Alexandria, Virginia 22313-1450, with the contents of the letter marked to the attention of the Office of PCT Legal Administration.

Rafael Bacares
PCT Legal Examiner
PCT Legal Office
Telephone: (571) 272-3276
Facsimile: (571) 272-0459

UNITED STATES PATENT and TRADEMARK OFFICE

COMMISSIONER FOR PATENTS
UNITED STATES PATENT AND TRADEMARK OFFICE
P.O BOX 1450
ALEXANDRIA, VA 22313-1450
www.uspto.gov

SUGHRUE MION, PLLC
2100 PENNSYLVANIA AVENUE, N.W.
SUITE 800
WASHINGTON DC 20037

In re Application of	: DECISION ON RENEWED
DESORBAY et al	: MAILED
Application No. 11/914,181	:
PCT No.: PCT/EP2006/005307	: PETITION UNDER JUN 27 2011
Int. Filing Date: 03 April 2006	:
Priority Date: 13 May 2005	: PCT LEGAL ADMINISTRATION
Attorney's Docket No.: Q104925	:
For: IMPROVED CORE... APPLICATIONS	: 37 CFR 1.137 (b)

This decision is responsive to applicants' "PETITION FOR REVIVAL OF AN APPLICATION FOR PATENT ABANDONED UNINTENTIONALLY UNDER 37 CFR 1.137(b)," filed on 27 April 2011 requesting the acceptance of the continuation application as the proper reply.

BACKGROUND

On 03 April 2006, this international application was filed, claiming an earliest priority date of 13 May 2005.

On 12 November 2007, applicant filed a Transmittal letter for entry into the national stage in the United States Patent and Trademark Office (USPTO), which was accompanied by, the basic national fee. No executed declaration or oath was filed at such time.

On 06 May 2008, the United States Designated/Elected Office mailed a Notification of Missing Requirements under 35 U.S.C. 371 (Form PCT/DO/EO/905) indicating that the "oath or declaration complying with 37 CFR 1.497(a) and (b), identifying the application by the International application number and International filing date," must be furnished within the time period set forth. The notification set a two months time limit or 32 months from the priority date for the application, whichever is later to respond, and that failure to properly respond would result in abandonment

On 08 December 2008, petitioner filed a petition under 37 CFR 1.147(a).

On 16 March 2009, the USPTO dismissed the petition filed under 37 CFR 1.147(a) on 08 December 2008.

On 17 October 2009, petitioner filed a renewed petition under 37 CFR 1.147(a).

On 22 January 2010, the USPTO dismissed the renewed petition filed under 37 CFR 1.147(a) on 17 October 2009.

On 23 August 2010, petitioner filed a second renewed petition under 37 CFR 1.147(a).

On 27 October 2010, the USPTO dismissed the second renewed petition filed under 37 CFR 1.147(a) on 23 August 2010.

On 01 April 2011, the USPTO mailed applicant Notification of Abandonment (Form PCT/DO/EO/909) indicating that applicant has failed to respond to the notification of MISSING REQUIREMENTS (Form PCT/DO/EO/905) mailed 05/06/2008 within the time period set therein.

On 27 April 2011 petitioner submitted a petition under 37 CFR 1.137(b).

DISCUSSION

A grantable petition to revive an abandoned application under 37 CFR 1.137(b) must be accompanied by (1) the required reply, unless previously filed. In a nonprovisional application abandoned for failure to prosecute, the required reply may be met by the filing of a continuing application; (2) the petition fee as set forth in § 1.17(m); and (3) a statement that the entire delay in filing the required reply from the due date for the reply until the filing of a grantable petition pursuant to this paragraph was unintentional. The Commissioner may require additional information where there is a question whether the delay was unintentional; and (4) any terminal disclaimer (and fee as set forth in § 1.20 (d)) required pursuant to paragraph (c) of this section.

Petitioner has satisfied requirement (1) because the filing of a continuation patent application is a proper reply for the Notice mailed on November 8, 2007 by the USPTO.

In addition, petitioner has provided: (2) the petition fee set forth in §1.17(m) and (3) the proper statement under 137(b)(3). In this application, no terminal disclaimer is required.

Thus satisfying requirements (1) - (4) under 37 CFR 1.137(b).

Accordingly, the petition is deemed to satisfy all the items under 37 CFR 1.137(b).

DECISION

The petition under 37 CFR 1.137(b) is **GRANTED**.

This application is being returned to the United States Designated/Elected Office (DO/EO/US) for continued processing.

Rafael Bacares
PCT Legal Examiner
PCT Legal Administration
Work (571) 272-6312
Fax (571) 273-0459

UNITED STATES PATENT AND TRADEMARK OFFICE

Commissioner for Patents
United States Patent and Trademark Office
P.O. Box 1450
Alexandria, VA 22313-1450
www.uspto.gov

Decision Date : April 19, 2012

In re Application of :

Tilak Dias

Application No : 11914194

Filed : 21-Jul-2008

Attorney Docket No : 19183US01

DECISION ON REQUEST TO WITHDRAW AS ATTORNEY/AGENTOF RECORD

This is an electronic decision on the Request to Withdraw as attorney or agent of record under 37 CFR § 1.36(b), filed April 19, 2012

The request is **APPROVED.**

The request was signed by Sarah A. Kofflin (registration no. 60218) on behalf of all attorneys/agents associated with Customer Number 23446 . All attorneys/agents associated with Cusotmer Number 23446 have been withdrawn.

Since there are no remaining attorneys of record, all future communications from the Office will be directed to the first named inventor or assignee that has properly made itself of record pursuant to 37 CFR 3.71, with correspondence address:

Name	EntellFibres Limited
Name2	
Address 1	Unit 24, Wheel Forge Way
Address 2	
City	Trafford Park, Manchester
State	
Postal Code	M171EH
Country	GB

As a reminder, requester is required to inform the first named inventor or assignee that has properly made itself of record pursuant to 37 CFR 3.71 of the electronically processed petition.

Telephone inquiries concerning this decision should be directed to the Patent Electronic Business Center (EBC) at 866-217-9197.

Office of Petitions

Doc Code: PET.AUTO **Document Description: Petition automatically granted by EFS-Web**	PTO/SB/83 U.S. Patent and Trademark Office Department of Commerce

Electronic Petition Request	**REQUEST FOR WITHDRAWAL AS ATTORNEY OR AGENT AND CHANGE OF CORRESPONDENCE ADDRESS**
Application Number	11914194
Filing Date	21-Jul-2008
First Named Inventor	Tilak Dias
Art Unit	1798
Examiner Name	ANDREW PIZIALI
Attorney Docket Number	19183US01
Title	OPERATIVE DEVICES INSTALLED IN YARNS

◉ Please withdraw me as attorney or agent for the above identified patent application and the practitioners of record associated with Customer Number: 23446

The reason(s) for this request are those described in 37 CFR:

10.40(c)(1)(iv)

10.40(c)(1)(vi)

Certifications

☒ I/We have given reasonable notice to the client, prior to the expiration of the response period, that the practitioner(s) intend to withdraw from employment

☒ I/We have delivered to the client or a duly authorized representative of the client all papers and property (including funds) to which the client is entitled

☒ I/We have notified the client of any responses that may be due and the time frame within which the client must respond

Change the correspondence address and direct all future correspondence to the first named inventor or assignee that has properly made itself of record pursuant to 37 CFR 3.71:

Name	EntellFibres Limited
Address	Unit 24, Wheel Forge Way
City	Trafford Park, Manchester
State	
Postal Code	M171EH

Country	GB
I am authorized to sign on behalf of myself and all withdrawing practitioners.	
Signature	/Sarah A. Kofflin/
Name	Sarah A. Kofflin
Registration Number	60218

UNITED STATES PATENT AND TRADEMARK OFFICE

Commissioner for Patents
United States Patent and Trademark Office
P.O. Box 1450
Alexandria, VA 22313-1450
www.uspto.gov

GUDRUN E HUCKETT DRAUDT
SCHUBERTSTR 15A
WUPPERTAL 42289 DE GERMANY

MAILED
DEC 22 2011
OFFICE OF PETITIONS

In re Application of	:	
Kolczyk, et al.	:	
Application No. 11/914,237	:	DECISION ON PETITION
Filing Date: September 28, 2008	:	TO REVIVE
Attorney Docket No. 2230/US	:	

This is in response to the petition to revive under 37 CFR 1.137(b), filed December 9, 2011.

The petition under 37 CFR 1.137(b) is **GRANTED**.

The above application became abandoned for failure to timely file pay the issue fee in response to the Notice of Allowance, mailed September 6, 2011. This Notice set a statutory period for reply of three months. No issue fee having been received, the application became abandoned on December 7, 2011.

With the instant petition, applicants paid the petition fee, submitted the required reply in the form of the issue fee, and made the proper statement of unintentional delay.

The application is being forwarded to the Office of Data Management for processing into a patent.

Telephone inquiries concerning this decision may be directed to the undersigned at (571)272-3207.

Cliff Congo
Petitions Attorney
Office of Petitions

UNITED STATES PATENT AND TRADEMARK OFFICE

UNITED STATES DEPARTMENT OF COMMERCE
United States Patent and Trademark Office
Address: COMMISSIONER FOR PATENTS
P.O. Box 1450
Alexandria, Virginia 22313-1450
www.uspto.gov

APPLICATION NO.	FILING DATE	FIRST NAMED INVENTOR	ATTORNEY DOCKET NO.	CONFIRMATION NO.
11/914,283	11/13/2007	Soichiro Hiraoka	MAT-10096US	5181

52473 7590 10/27/2010
RATNERPRESTIA
P.O. BOX 980
VALLEY FORGE, PA 19482

EXAMINER
BALL, JOHN C

ART UNIT	PAPER NUMBER
1759	

MAIL DATE	DELIVERY MODE
10/27/2010	PAPER

Please find below and/or attached an Office communication concerning this application or proceeding.

The time period for reply, if any, is set in the attached communication.

UNITED STATES PATENT AND TRADEMARK OFFICE

Commissioner for Patents
United States Patent and Trademark Office
P.O. Box 1450
Alexandria, VA 22313-1450
www.uspto.gov

October 27, 2010 BC

In re application of Soichiro Hiraoka et al. Serial No. 11/914,283 Filed: November 13, 2007 For: CHIP FOR CELL ELECTROPHYSIO-LOGICAL SENSOR, CELL ELECTROPHYSO-LOGICAL SENOR USING THE SAME, AND MANUFACTURING METHOD OF CHIP FOR CELL ELECTROPHYSIOLOGICAL SENSOR	DECISION ON REQUEST TO PARTICIPATE IN PATENT PROSECUTION HIGHWAY PROGRAM AND PETITION TO MAKE SPECIAL UNDER 37 CFR 1.102(a)

This is a decision on the request to participate in the Patent Prosecution Highway (PPH) program filed September 23, 2010.

The request and petition are **GRANTED**.

A grantable request to participate in the PPH program and petition to make special require:

(1) The U.S. application must validly claim priority under 35 U.S.C. 119(a) to one or more applications filed in the JPO, note where the JPO application with similar claims is not the same application from which the U.S. application claims priority that the applicant must identify the relationship between the JPO application with similar claims and the JPO priority application;

(2) Applicant must submit a copy of:
   a. The allowable/patentable claim(s) from the JPO application(s) or if a copy of the allowable/patentable claims is available via the Dossier Access System (DAS) applicant may request the USPTO to obtain a copy from DAS; however, if the USPTO is unable to obtain a copy from the DAS, the applicant will be required to submit a copy;
   b. An English translation of the allowable/ patentable claim(s), if applicable; and
   c. A statement that the English translation is accurate, if applicable;

(3) Applicant must:
   a. Ensure all the claims in the U.S. application must sufficiently correspond or be amended to sufficiently correspond to the allowable/patentable claim(s) in the JPO application(s); and
   b. Submit a claims correspondence table in English;

(4) Examination of the U.S. application has not begun;

(5) Applicant must submit:

a. Documentation of prior office action:
   i. a copy of the office action(s) just prior to the "Decision to Grant a Patent" from each of the JPO application(s) containing the allowable/patentable claims(s) or
   ii. if the allowable/patentable claim(s) are from "Notification of Reasons for Refusal" then the Notification of Reasons for Refusal or
   iii. if the JPO application is a first action allowance then no office action from the JPO is necessary should be indicated on the request/petition form;
   Further, if a copy of the documents from a or b is available via the Dossier Access System (DAS), applicant may request the USPO obtain a copy from the DAS; however, if the USPTO is unable to obtain a copy of the DAS, the applicant will be required to submit a copy;
b. An English language translation of the JPO Office action from (5)(a)(i)-(ii) above if applicable; and
c. A statement that the English translation is accurate; and

(6) Applicant must submit:

a. An IDS listing the documents cited by the JPO examiner in the JPO office action (unless already submitted in this application)
b. Copies of documents except U.S. patents or U.S. patent application publications (unless already submitted in this application).

The request to participate in the PPH program and petition comply with the above requirements. Accordingly, the above-identified application has been accorded "special" status.

The application is being forwarded to the examiner for action on the merits commensurate with this decision.

Any inquiry regarding this decision should be directed to Blaine Copenheaver, Quality Assurance Specialist, at (571) 272-1156.

All other inquiries concerning the examination or status of the application is accessible in the PAIR system at http://www.uspto.gov/ebc/index.html.

/Blaine Copenheaver/

Blaine Copenheaver
Quality Assurance Specialist
Technology Center 1700

UNITED STATES PATENT AND TRADEMARK OFFICE

Commissioner for Patents
United States Patent and Trademark Office
P.O. Box 1450
Alexandria, VA 22313-1450
www.uspto.gov

Decision Date : December 6, 2011

In re Application of :

Lasse Larsen

Application No : 11914287

Filed : 05-May-2008

Attorney Docket No : 606-174.101

DECISION ON REQUEST TO WITHDRAW AS ATTORNEY/AGENTOF RECORD

This is an electronic decision on the Request to Withdraw as attorney or agent of record under 37 CFR § 1.36(b), filed December 6, 2011

The request is **APPROVED.**

The request was signed by Howard J. Klein (registration no. 28727) on behalf of all attorneys/agents associated with Customer Number 22145 . All attorneys/agents associated with Cusotmer Number 22145 have been withdrawn.

Since there are no remaining attorneys of record, all future communications from the Office will be directed to the first named inventor or assignee that has properly made itself of record pursuant to 37 CFR 3.71, with correspondence address:

Name Lasse L. K. Larsen

Name2

Address 1 Araishu Street 34

Address 2

City Riga

State

Postal Code LV-1039

Country LV

As a reminder, requester is required to inform the first named inventor or assignee that has properly made itself of record pursuant to 37 CFR 3.71 of the electronically processed petition.

Telephone inquiries concerning this decision should be directed to the Patent Electronic Business Center (EBC) at 866-217-9197.

Office of Petitions

Doc Code: PET.AUTO **Document Description: Petition automatically granted by EFS-Web**	PTO/SB/83 U.S. Patent and Trademark Office Department of Commerce

Electronic Petition Request	**REQUEST FOR WITHDRAWAL AS ATTORNEY OR AGENT AND CHANGE OF CORRESPONDENCE ADDRESS**
Application Number	11914287
Filing Date	05-May-2008
First Named Inventor	Lasse Larsen
Art Unit	3687
Examiner Name	RUSSELL GLASS
Attorney Docket Number	606-174.101
Title	METHOD AND SYSTEM FOR ELECTRONICALLY DISTRIBUTING SALES INFORMATION TO A SELECTED GROUP OF INDIVIDUALS

◉ Please withdraw me as attorney or agent for the above identified patent application and the practitioners of record associated with Customer Number: 22145

The reason(s) for this request are those described in 37 CFR:

10.40(c)(1)(iv)

10.40(c)(1)(vi)

Certifications

☒ I/We have given reasonable notice to the client, prior to the expiration of the response period, that the practitioner(s) intend to withdraw from employment

☒ I/We have delivered to the client or a duly authorized representative of the client all papers and property (including funds) to which the client is entitled

☒ I/We have notified the client of any responses that may be due and the time frame within which the client must respond

Change the correspondence address and direct all future correspondence to the first named inventor or assignee that has properly made itself of record pursuant to 37 CFR 3.71:

Name	Lasse L. K. Larsen
Address	Araishu Street 34
City	Riga
State	
Postal Code	LV-1039

Country	LV
I am authorized to sign on behalf of myself and all withdrawing practitioners.	
Signature	/HJK/
Name	Howard J. Klein
Registration Number	28727

UNITED STATES PATENT AND TRADEMARK OFFICE

Commissioner for Patents
United States Patent and Trademark Office
P.O. Box 1450
Alexandria, VA 22313-1450
www.uspto.gov

SMITH PATENT CONSULTING, LLC
515 East Braddock Road
Suite B
ALEXANDRIA VA 22314

MAILED
JUN 20 2011
OFFICE OF PETITIONS

In re Application of	:	
Tararov et al.	:	
Application No. 11/914,317	:	DECISION ON PETITION
Filed: January 22, 2008	:	
Attorney Dkt. No. LNK-037	:	

This is a decision on the petition under the unintentional provisions of 37 CFR 1.137(b), filed June 13, 2011, to revive the above-identified application.

The petition under 37 CFR 1.137(b) is **GRANTED**.

This above-identified application became abandoned for failure to timely file a reply to a restriction requirement mailed September 10, 2010. The Office Action set a one (1) month shortened statutory period for reply. No timely extensions of time were obtained under the provisions of 37 CFR 1.136(a). Accordingly, this application became abandoned on October 11, 2010. A Notice of Abandonment was mailed on April 11, 2011.

The petition satisfies the requirements of 37 CFR 1.137(b) in that petitioner has supplied (1) the reply in the form of a reply to the restriction requirement (2) the petition fee of $1620.00, and (3) a statement of unintentional delay.

Telephone inquiries concerning this decision should be directed to the undersigned at (571) 272-3215.

This application is being referred to Technology Center AU 1622 for appropriate action by the Examiner in the normal course of business on the reply received

/Charlema Grant/
Charlema Grant
Petitions Attorney
Office of Petitions

UNITED STATES PATENT AND TRADEMARK OFFICE

Commissioner for Patents
United States Patent and Trademark Office
P.O. Box 1450
Alexandria, VA 22313-1450
www.uspto.gov

Patent No. : 7,696,366 B2
Ser. No. : 11/914,489
Inventor(s) : Uchida et al.
Issued : Apr. 13, 2010
Title : PRODUCTION PROCESS OF BIFUNCTIONAL EPOXY MONOMER BY SELECTIVE OXIDATION OF DIOLEFIN COMPOUND
Docket No. : Q88133
Re: Request for Certificate of Correction

Consideration has been given your request for the issuance of a certificate of correction for the above-identified patent under the provisions of Rule(s) 1.322 and/or 1.323.

Assignees' names and addresses (assignment data) printed in a patent, are based *solely* on information supplied in the appropriate space for identifying the assignment data, i.e., item 3 of the Issue Fee Transmittal Form PTOL-85B. Granting of a request under 37 CFR 3.81(b) is required to correct applicant's error providing ***incorrect or erroneous*** assignment data, *before* issuance of a Certificate of Correction, under 37 CFR 1.323 *(see Manual of Patent Examining Procedures (M.P.E.P) Chp.1400, sect. 1481).* This procedure is required *at any time after the issue fee is paid*, including after issuance of the patent.

In view of the foregoing, your request, in this matter, is hereby denied.

A request to correct the Assignee under 37 CFR 3.81(b) should include:

A. **the processing fee set forth in 37 CFR 1. 17(i) (currently $130);**
B. a statement that the failure to include the correct assignee name on the PTOL-85B was inadvertent; and
C. a copy of the Notice of Recordation of Assignment Document, reflecting the reel and frame number where the assignment(s) is recorded and/or reflecting proof of *the date* the assignment was submitted for recordation.

In the Request, Applicant(s) may request that the file be forwarded to Certificates of Correction Branch, for issuance of a Certificate of Correction, if the Request is granted.

Any request under 37 CFR 3.81(b) should be directed to the following address or facsimile number:

By mail: Mail Stop PETITIONS
Commissioner for Patents
Post Office Box 1450
Alexandria, VA 22313-1450

By hand: Customer Service Window
Mail Stop Petitions
Randolph Building
401 Dulany Street
Alexandria, VA 22314

By fax: (703) 872-9306
ATTN: Office of Petitions

If a fee (currently $100) was previously submitted for consideration of a Request for Certificate of Correction, under CFR 1.323, to correct assignment data, no additional fee is required.

Ennis Young
For Mary Diggs
Decisions & Certificates
of Correction Branch
(571) **272-3435** or (703) 756-1814

UNITED STATES PATENT AND TRADEMARK OFFICE

Commissioner for Patents
United States Patent and Trademark Office
P.O. Box 1450
Alexandria, VA 22313-1450
www.uspto.gov

SUGHRUE MION, PLLC
2100 PENNSYLVANIA AVENUE, N.W.
SUITE 800
WASHINGTON DC 20037

MAILED
DEC 08 2010
OFFICE OF PETITIONS

In re Patent No. 7,696,366 :
Issued: April 13, 2010 :
Application No. 11/914,489 : DECISION ON PETITION
Filed: November 15, 2007 :
Attorney Docket No. Q88133 :

This is a decision on the petition, filed, November 16, 2010, which is being treated as a request under 37 CFR 3.81(b)[1] to correct the assignee's name and residence on the Letters Patent by way of a certificate of correction in the above-identified patent.

The request is GRANTED.

Petitioner states that the correct assignee's name includes "National Institute of Advanced Industrial Science and Technology" and that the assignee's name was not included on the Fee(s) Transmittal form PTOL-85(b) at the time of payment of the issue fee.

37 CFR 3.81(b), effective June 25, 2004, reads:

> *After payment of the issue fee:* Any request for issuance of an application in the name of the assignee submitted after the date of payment of the issue fee, and any request for a patent to be corrected to state the name of the assignee, must state that the assignment was submitted for recordation as set forth in § 3.11 before issuance of the patent, and must include a request for a certificate of correction under § 1.323 of this chapter (accompanied by the fee set forth in § 1.20(a) and the processing fee set forth in § 1.17(i) of this chapter).

The request was accompanied by a certificate of correction (and fee) as required by 3.81(b). Further, Office assignment records reflect that "National Institute of Advanced Industrial Science and Technology" is the assignee of record. Accordingly, as the request complies with the provisions of 37 CFR 3.81(b), it would be appropriate to issue a certificate of correction.

[1] *See* MPEP 1309, subsection II; and Official Gazette of June 22, 2004.

Inquiries concerning this decision should be directed to the undersigned at (571) 272-3205. Any questions concerning the issuance of a certificate of correction should be directed to the Certificates of Correction Branch at (571) 272-4200.

This matter is being referred to the Certificates of Correction Branch for processing of a certificate of correction after issuance of this application into a patent.

/ALESIA M. BROWN/

Alesia M. Brown
Petitions Attorney
Office of Petitions

UNITED STATES PATENT AND TRADEMARK OFFICE

Commissioner for Patents
United States Patent and Trademark Office
P.O. Box 1450
Alexandria, VA 22313-1450
www.uspto.gov

Paper No.

QUARLES & BRADY LLP
411 E. WISCONSIN AVENUE
SUITE 2040
MILWAUKEE WI 53202-4497

MAILED

APR 26 2011

OFFICE OF PETITIONS

In re Patent No. 7,874,458 :
Alberto Sogaro :
Issue Date: January 25, 2011 :
Application No. 11/914,576 : LETTER REGARDING
Filed: November 16, 2007 : FEE DEFICIENCY PAYMENT
Atty Docket No. 128051.00037 :

This is in response to the paper styled "Payment of Fee Deficiency Pursuant to 37 C.F.R. § 1.28(c) Due to Not Notifying the Office of a Loss of Entitlement to Small Entity Status" filed April 1, 2011, which is properly treated as a notification of loss of entitlement to small entity status.

The Office no longer investigates or rejects original or reissue applications under 37 CFR 1.56. 1098 Off. Gaz. Pat. Office 502 (January 3, 1989). Therefore, nothing in this Notice is intended to imply that an investigation was done.

This letter includes an itemization of the fee deficiencies and payment as required by 37 CFR 1.28(c)(2)(ii).

Your notification of a loss of entitlement to small entity status is made of record and your fee deficiency submission under 37 CFR 1.28 is hereby **ACCEPTED**.

Telephone inquiries related to this decision should be directed to the undersigned at 571-272-3219.

Nancy Johnson

Nancy Johnson
Senior Petitions Attorney
Office of Petitions

UNITED STATES PATENT AND TRADEMARK OFFICE

Commissioner for Patents
United States Patent and Trademark Office
P.O. Box 1450
Alexandria, VA 22313-1450
www.uspto.gov

MAILED
MAY 18 2011
OFFICE OF PETITIONS

WATERS TECHNOLOGIES CORPORATION
34 MAPLE STREET - LG
MILFORD MA 01757

In re Application of	:	
Geromanos, et al.	:	
Application No. 11/914,578	:	ON PETITION
Filed: August 1, 2008	:	
Attorney Docket No. W-425-02	:	

This is a decision on the petition to revive under 37 CFR 1.137(b), filed May 4, 2011.

The petition under 37 CFR 1.137(b) is **GRANTED**.

The above-identified application became abandoned for failure to timely file a reply in response to the non-final Office action mailed August 12, 2010. This Office action set a shortened statutory period for reply of three (3) months. No reply having been received, the application became abandoned on December 13, 2010. The Office mailed a Notice of Abandonment on March 25, 2011.

With the instant petition, applicants made the proper statement of unintentional delay, paid the petition fee, and filed the required reply in the form of an Amendment.

The application is being forwarded to Group Art Unit 2857 for consideration of the Amendment, filed May 4, 2011.

Telephone inquiries related to this decision should be directed to the undersigned at (571)272-3207.

Cliff Congo
Petitions Attorney
Office of Petitions

UNITED STATES PATENT AND TRADEMARK OFFICE

Commissioner for Patents
United States Patent and Trademark Office
P.O. Box 1450
Alexandria, VA 22313-1450
www.uspto.gov

FOLEY AND LARDNER LLP
SUITE 500
3000 K STREET NW
WASHINGTON DC 20007

MAILED
DEC 02 2010
OFFICE OF PETITIONS

In re Application of Steidl et al. :
Application No. 11/914,599 :
Filing Date: November 16, 2007 :
Attorney Docket No. 047744-0117 :
For: ANTI-GM-CSF ANTIBODIES AND :
USES THEREFOR :

Decision on Application
For Patent Term Adjustment

This is a decision in response to a "REQUEST FOR RECONSIDERATION OF PATENT TERM ADJUSTMENT FOR PATENT APPLICATION UNDER 37 C.F.R. § 1.705(b)," filed September 15, 2010. Applicants submit that the patent term adjustment to be indicated on the patent is one hundred nine (109) days, not sixty-seven (67) days as calculated by the Office as of the mailing of the initial determination of patent term adjustment.

The application for patent term adjustment is **DISMISSED.**

On June 16, 2010, the Office mailed a Determination of Patent Term Adjustment under 35 U.S.C. 154(b) in the above-identified application. Applicants were advised of a patent term adjustment to date of 67 days. In response, applicants timely[1] filed the instant request for reconsideration of the patent term adjustment. Applicants submit the relevant dates as specified in 1.703(a) through (e) for which an adjustment is sought and request that the patent term adjustment be corrected to 109 days. Applicants dispute the cumulative reduction of 47 days of PTA for applicant delay in filing supplemental responses on December 8, 2008 and December 9, 2008. Applicants state that the responses were filed at the request of the examiner and, therefore, no reductions are warranted.

The application history has been reviewed and it has been determined that the initial patent term adjustment of 67 days is correct.

[1] PALM Records indicate that the Issue Fee payment was received on September 15, 2010.

Applicants' arguments have been considered, but not found persuasive. The record does not support a conclusion that the supplemental reply of December 8, 2008 and the supplemental reply of December 9, 2008 were filed in response to an express request by the Examiner.

A restriction requirement was mailed on September 24, 2008. On October 23, 2008, applicants filed a response.

The record shows that on December 3, 2008, Examiner Mertz and applicants' representative discussed the 35 U.S.C. 112, first paragraph enablement rejections and 35 U.S.C. 102(b) rejections over the claims. Examiner Mertz states, "Attorney discussed submitting a supplemental amendment to obviate the rejections." *See* Interview Summary, mailed December 4, 2008.

On December 8, 2008, applicants filed a supplemental amendment including remarks concerning the April 21, 2009 Examiner Initiated Interview. The REMARKS section states (in pertinent part), "The Examiner Interview Summary dated December 4, 2008, reflects the substance of the discussions between Examiner Mertz and the undersigned representative. The forgoing amendments to the claims reflect amendments discussed with the Examiner. We thank the Examiner for the courtesy of an interview."

Applicants argue the December 8, 2008 supplemental amendment was expressly requested by the examiner, within the meaning of § 1.704(c)(8). Accordingly, applicants argue no reduction is warranted. The Office does not concur. Examiner Mertz never explicitly requested applicants submit a supplemental amendment. Examiner Mertz states, "Attorney discussed submitting a supplemental amendment to obviate the rejections." *See* Interview Summary, mailed December 4, 2008. Applicants' remarks on page 9 of the supplemental preliminary amendment do **not** include a statement that the examiner requested the submission of the amendment. There is insufficient contemporaneous evidence in the record to support the conclusion that the December 8, 2008 supplemental reply was expressly requested by the examiner.

The Office properly entered a 37 CFR 1.704(c)(8) reduction of 46 days, beginning on October 24, 2008, the day after the October 23, 2008 election was filed, and ending on December 8, 2008, the date the supplemental preliminary amendment was filed. No change will be made.

Applicants argue the December 9, 2008 supplemental amendment was expressly requested by the examiner, within the meaning of § 1.704(c)(8). To support their position, applicants point to page 9 of the second supplemental preliminary amendment, which states, in pertinent part, "These new claims accord with those agreed upon in the December 9, 2008 telephone conference between Examiner Mertz and the undersigned representative. Entry, consideration and allowance of all pending claims is respectfully sought."

Applicants' remarks on page 9 of second supplemental preliminary amendment do **not** include a statement that the examiner requested the submission of the amendment. It is noted that there is no Interview Summary for a telephone conference that allegedly took place on December 9, 2008 in the record. There is insufficient contemporaneous evidence in the record to support the

conclusion that the December 9, 2008 supplemental reply was expressly requested by the examiner.

The Office properly entered a 37 CFR 1.704(c)(8) reduction of 1 day for the December 9, 2008 second supplemental preliminary amendment. No change will be made.

In view thereof, the determination of the patent term adjustment at the time of the mailing of the notice of allowance remains sixty-seven (67) days.

Submission of the $200.00 fee set forth in 37 CFR 1.18(e) is acknowledged. This fee is required and will not be refunded. No additional fee is required.

The application file is being forwarded to the Office of Patent Publication for issuance of the patent. The patent term adjustment shown on the patent (and in the Issue Notification mailed approximately three weeks prior to issuance) will include any additional patent term accrued pursuant to sections 1.702(a)(4) and 1.703(b).

Telephone inquiries regarding this communication should be directed to the undersigned at (571) 272-3230.

Shirene Willis Brantley

Shirene Willis Brantley
Senior Petitions Attorney
Office of Petitions

UNITED STATES PATENT AND TRADEMARK OFFICE

Commissioner for Patents
United States Patent and Trademark Office
P.O. Box 1450
Alexandria, VA 22313-1450
www.uspto.gov

FOLEY AND LARDNER LLP
SUITE 500
3000 K STREET NW
WASHINGTON DC 20007

MAILED
SEP 30 2011
OFFICE OF PETITIONS

In re Patent of Steidl et al.	:	FINAL AGENCY DECISION
Patent No. 7,867,495	:	ON
Issued: January 11, 2011	:	REQUEST FOR RECONSIDERATION
Application No. 11/914,599	:	OF
Filing Date: November 16, 2007	:	DECISION ON APPLICATION
Attorney Docket No. 047744-0117	:	FOR
For: ANTI-GM-CSF ANTIBODIES AND	:	PATENT TERM ADJUSTMENT
USES THEREFOR	:	

This is a decision on the "RESPONSE TO, AND REQUEST FOR RECONSIDERATION OF, DECISION ON APPLICATION FOR PATENT TERM ADJUSTMENT UNDER 37 C.F.R. 1.705," filed February 2, 2011, requesting reconsideration of the decision of December 2, 2010, and restoration of 47 days of patent term.

The request for reconsideration of the decision of December 2, 2010, is granted to the extent that the decision of December 2, 2010, has been reconsidered; however, the request for reconsideration is **DENIED** with respect to making any change in the patent adjustment determination under 35 U.S.C. § 154(b). This decision may be viewed as a final agency action within the meaning of 5 U.S.C. § 704 and for purposes of seeking judicial review. See MPEP 1002.02.

BACKGROUND

On June 16, 2010, the Office mailed a Determination of Patent Term Adjustment under 35 U.S.C. 154(b) in the above-identified application. Applicants were advised of a patent term adjustment to date of 67 days. In response, applicants timely filed a request for reconsideration of the patent term adjustment under 37 CFR 1.705(b) on September 15, 2010, requesting that the patent term adjustment be corrected to 109 days. On December 2, 2010, the Office mailed a dismissal of the petition, maintaining a 67 day patent term adjustment. On January 11, 2011, the above-identified application matured into U.S. Patent No. 7,867,495, with a revised patent term adjustment of 3 days. Patentees filed the present reconsideration petition within two months of

the mailing of the December 2, 2010 dismissal, on February 2, 2011. Page 1 of the present petition states, "...This filing concerns only the assertion of 47 days of Applicant delay that was first raised in the Notice of Allowance, and is without waiver of any additional PTA to which Applicant may be entitled." Patentees renew their dispute of the cumulative reduction of 47 days of PTA for applicant delay in filing supplemental responses on December 8, 2008 and December 9, 2008. Patentees state that the responses were filed at the request of the examiner and, therefore, no reductions are warranted

RELEVANT REGULATION

37 CFR § 1.704 Reduction of period of adjustment of patent term.

....

(c) Circumstances that constitute a failure of the applicant to engage in reasonable efforts to conclude processing or examination of an application also include the following circumstances, which will result in the following reduction of the period of adjustment set forth in § 1.703 to the extent that the periods are not overlapping:

...

> (8) Submission of a supplemental reply or other paper, other than a supplemental reply or other paper expressly requested by the examiner, after a reply has been filed, in which case the period of adjustment set forth in § 1.703 shall be reduced by the number of days, if any, beginning on the day after the date the initial reply was filed and ending on the date that the supplemental reply or other such paper was filed;

OPINION

Patentees' arguments have been considered, but not found persuasive.The record does not support a conclusion that the supplemental reply of December 8, 2008 and the supplemental reply of December 9, 2008 were filed in response to an express request by the Examiner.

As of September 24, 2008, Claims 1, 4, 7, and 10-38 were pending.

The Office mailed a restriction requirement on September 24, 2008.

A reply to the restriction requirement was filed October 23, 2008.

An IDS was filed October 28, 2008.

An interview summary form mailed December 4, 2008, indicates the examiner and attorney Simon J. Elliott held a telephonic interview on December 3, 2008. The form indicates they discussed Claims 1, 4, 7, 10-23, 33, 37, and 38. The form states, with emphasis added in bold,

> The ... rejections over the claims [were] discussed. Attorney discussed submitting a supplemental amendment to obviate the rejections....
>
> THE FORMAL WRITTEN REPLY TO THE LAST OFFICE ACTION MUST INCLUDE THE SUBSTANCE OF THE INTERVIEW. (See MPEP Section 713.04)

MPEP 713.04 states, with emphasis added,

> A complete written statement as to the substance of any face-to-face, video conference, electronic mail or telephone interview with regard to the merits of an application must be made of record in the application, whether or not an agreement with the examiner was reached at the interview. See 37 CFR 1.133(b), MPEP § 502.03 and § 713.01....
>
> The action of the U.S. Patent and Trademark Office cannot be based exclusively on the written record in the Office if that record is itself incomplete through the failure to record the substance of interviews.
>
> It is the responsibility of the applicant or the attorney or agent to make the substance of an interview of record in the application file, except where the interview was initiated by the examiner and the examiner indicated on the "Examiner Initiated Interview Summary" form (PTOL-413B) that the examiner will provide a written summary.

The interview summary form is <u>not</u> an Examiner Initiated Interview Summary form, which appears to indicate applicants called the examiner instead of the examiner calling applicants with a request.

Applicants filed a supplemental amendment on December 8, 2008. Their comments on the actual substance of the interview state,

> The Examiner Interview Summary dated December 4, 2008, reflects the substance of the discussions.... The foregoing amendments to the claims reflect amendments discussed with the examiner. We thank the Examiner for the courtesy of an interview.

Applicants argue the December 8, 2008 supplemental amendment was expressly requested by the examiner, within the meaning of § 1.704(c)(8). Accordingly, applicants argue no reduction is warranted. The Office does not concur. Examiner Mertz never explicitly requested applicants submit a supplemental amendment. Examiner Mertz states, "Attorney discussed submitting a supplemental amendment to obviate the rejections." See Interview Summary, mailed December 4, 2008. Applicants' remarks on page 9 of the supplemental preliminary amendment do not include a statement that the examiner requested the submission of the amendment. There is insufficient contemporaneous evidence in the record to support the conclusion that the December 8, 2008 supplemental reply was expressly requested by the examiner. No rejections having been made by the examiner, and no art having been cited by the examiner, it cannot be said that the examiner called for an amendment to obviate an art rejection that does not appear to have been made. If anything, it appears that applicant contacted the examiner prior to the first Office action.

37 CFR 1.2 states,

> All business with the Patent and Trademark Office should be transacted in writing.... The action of the Patent and Trademark Office will be based exclusively on the written record in the Office. No attention will be paid to any alleged oral promise, stipulation, or understanding in relation to which there is disagreement or doubt.

The language quoted above means that the Office will not pay attention to any allegation that an examiner made a specific statement if any doubt exists as to whether the statement was made.

The examiner's interview summary form clearly indicated applicants were required make the substance of the interview of record. If applicants' December 8, 2008 response had included the alleged full substance of the interview, the examiner would have had the matter fresh in his mind and could have indicated in the record if he disagreed with any portion of their summary. By requiring applicants to make the substance of the interview of record, the examiner ensured all transactions were in writing.

Patentees are now, at a substantially later date, attempting to demonstrate a reduction in patent term adjustment is not warranted based on an alleged request made by the examiner during the December 3, 2008 interview. However, by relying on the alleged request, applicants are indicating the alleged request was not an insubstantial (lacking any substance) comment. Therefore, if the examiner requested the filing of a supplemental amendment, the following errors were made:

1. The examiner made an error by not indicating he requested the filing of a supplemental amendment,
2. Applicants made an error in failing to mention the examiner's request in their response, and
3. Applicants made an error in alleging the examiner's summary "reflects the substance of the discussions" since they are now alleging (in effect) that it only partially reflected the substance of the interview.

Patentees cite the following language in MPEP 2732:

> If an amendment is requested by an examiner, the examiner will have the paper processed so that it is included as part of an interview summary or examiner's amendment and not a separate paper for PALM to flag in the patent term adjustment calculation.

Patentees assert that because the Office assumes the burden of correctly processing any papers, the failure to correctly process the papers, and the resulting loss of PTA, should not be borne by applicants. Patentees, in essence, assert the Office has the burden of proving the examiner did not make an alleged statement/request during an interview summary. However, proving an examiner did not make a statement is almost impossible. In other words, if the burden of proving examiners did not make an alleged statement during an interview was on the Office, then parties

could basically allege examiners made any statement they wish because it would be almost impossible for the Office to prove the examiners did not make the statement.

With respect to the December 8, 2008 response, applicants failed to avail themselves of the opportunity to make the alleged request of record and thereby allow the examiner to consider their allegation that she had made the request. If applicants had done so, and the examiner had not commented on the matter, the Office would assume the lack of comment was an indication the examiner did not disagree with the allegation. The declaration provided by Attorney Elliot on February 2, 2011 states that based upon his records and memory, the filings of December 8 and 9, 2008 were in response to express requests of the Examiner, made by telephone. It is noted this declaration was provided over 2 years after the events at issue. There is insufficient contemporaneous evidence in the record to support the conclusion that the December 8, 2008 and December 9, 2008 supplemental replies were expressly requested by the examiner. Furthermore, prior to the first Office action, applicant has the right to file a preliminary amendment and so there would be no need for the examiner to require the filing of an amendment.

The Office properly entered a 37 CFR 1.704(c)(8) reduction of 46 days, beginning on October 24, 2008, the day after the October 23, 2008 election was filed, and ending on December 8, 2008, the date the supplemental preliminary amendment was filed. No change will be made.

Applicants argue the December 9, 2008 supplemental amendment was expressly requested by the examiner, within the meaning of 37 CFR 1.704(c)(8). To support their position, applicants point to page 9 of the second supplemental preliminary amendment, which states, in pertinent part, "These new claims accord with those agreed upon in the December 9, 2008 telephone conference between Examiner Mertz and the undersigned representative. Entry, consideration and allowance of all pending claims is respectfully sought." Applicants do **not** state the new claims were filed at the request of the examiner.

It is noted that there is no Interview Summary for a telephone conference that allegedly took place on December 9, 2008 in the record.

Applicants' petition under 37 CFR 1.705(b), filed September 15, 2010, states the examiner requested applicants "file amended claims to advance prosecution, with the goal of a first action allowance." However, applicants' December 9, 2009 amendment did not amend any of the claims, but instead added claims 76-89. The addition of new claims appears in no way to increase the allowability of the claims that were already presented. It is unlikely an examiner would request addition of the claims as part of a goal of issuing a first action allowance.

There is insufficient contemporaneous evidence in the record to support the conclusion that the December 9, 2008 supplemental reply was expressly requested by the examiner.

The Office properly entered a 37 CFR 1.704(c)(8) reduction of 1 day for the December 9, 2008 second supplemental preliminary amendment. No change will be made.

Patentees state the October 23, 2008 filing is strictly concerned with responding to the requirement for restriction and/or election of species that was set forth in the restriction requirement of September 23, 2008. Patentees argue the December 8, 2008 and the December 9, 2008 filings address possible future rejections, and therefore cannot be supplemental amendments to the October 23, 2008 filing. However, 37 CFR (c)(8) applies to the filing of any "supplemental amendment or other paper" after a reply has been filed. The timing of the filing, not its contents, is the pivotal issue.

CONCLUSION

Accordingly, the decision of December 2, 2010 on application for patent term adjustment has been reconsidered and the request for restoration of 47 days of patent term is **DENIED**.

The patent term adjustment is three (3) days, which is the sum of 114 days of delay under 35 U.S.C. § 154(b)(1)(A) and 56 of delay under 35 U.S.C. § 154(b)(1)(B), reduced by 167 (47 + 118 + 2) days of Applicant delay.

No fees will be refunded.

Telephone inquiries specific to this matter should be directed to Shirene Willis Brantley, Senior Petitions Attorney, at (571) 272-3230.

Anthony Knight
Director, Office of Petitions

UNITED STATES PATENT AND TRADEMARK OFFICE

Commissioner for Patents
United States Patent and Trademark Office
P.O. Box 1450
Alexandria, VA 22313-1450
www.uspto.gov

Waters Technologies Corporation
34 MAPLE STREET - LG
MILFORD MA 01757

MAILED

NOV 02 2011

PCT LEGAL ADMINISTRATION

In re Application of	:
GORENSTEIN, Marc, V.	:
Application No. 11/914,600	: DECISION ON PETITION
Int'l Filing Date: 05 June 2006	: UNDER 37 CFR 1.78(a)(6)
Attorney Docket No. W-419-02	:

This is a decision on the petition under 37 CFR 1.78(a)(6), filed 29 July 2011, to accept an unintentionally delayed claim under 35 U.S.C. §119(e) for the benefit of the prior-filed provisional application set forth in the concurrently filed amendment.

The petition is **GRANTED**.

A petition under 37 CFR 1.78(a)(6) is only applicable to those applications filed on or after November 29, 2000. Further, the petition is appropriate only after expiration of the period specified in 37 CFR 1.78(a)(5)(ii) and must be filed during the pendency of the nonprovisional application. In addition, the petition must be accompanied by:

(1) the reference required by 35 U.S.C. § 119(e) and 37 CFR 1.78(a)(5)(i) to the prior-filed application, unless previously submitted;
(2) the surcharge set forth in § 1.17(t); and
(3) a statement that the entire delay between the date the claim was due under 37 CFR 1.78(a)(5)(ii) and the date the claim was filed was unintentional. The Director may require additional information where there is a question whether the delay was unintentional.

The instant pending nonprovisional application was filed after November 29, 2000, and the claim herein for the benefit of priority to the prior-filed provisional application is submitted after expiration of the period specified in 37 CFR 1.78(a)(5)(ii). Therefore, this is a proper petition under 37 CFR 1.78(a)(6).

The petition complies with the requirements for a grantable petition under 37 CFR 1.78(a)(6) in that (1) a reference to the above-noted, prior-filed provisional application has been included in an amendment to the first sentence of the specification following the title, as provided by 37 CFR 1.78(a)(5)(iii); (2) the surcharge fee required by 37 CFR 1.17(t) has been submitted; and (3) the petition contains a proper statement of unintentional delay. Accordingly, having found that the instant petition for acceptance of an unintentionally delayed claim for the benefit of priority

under 35 U.S.C. § 119(e) to the above-noted, prior-filed provisional application satisfies the conditions of 37 CFR 1.78(a)(6), the petition is granted.

The granting of the petition to accept the delayed benefit claim to the prior-filed application under 37 CFR 1.78(a)(6) should not be construed as meaning that the instant application is entitled to the benefit of the filing date of the prior-filed application. In order for the instant application to be entitled to the benefit of the prior-filed application, all other requirements under 35 U.S.C. §119(e) and 37 CFR 1.78(a)(4) and (a)(5) must be met. Similarly, the fact that the corrected Filing Receipt accompanying this decision on petition includes the prior-filed application should not be construed as meaning that applicant is entitled to the claim for benefit of priority to the prior-filed application noted thereon. Accordingly, the examiner will, in due course, consider this benefit claim and determine whether the instant application is entitled to the benefit of the earlier filing date.

A corrected Filing Receipt, which includes the priority claim to the prior-filed provisional application, accompanies this decision on petition.

Any inquiries concerning this decision may be directed to Erin Thomson at (571) 272-3292. All other inquiries concerning either the examination procedures or status of the application should be directed to the Technology Center.

The application is being forwarded to Technology Center AU 1773 for appropriate action on the amendment submitted 29 July 2011, including consideration by the examiner of the claim under 35 U.S.C. §119(e) for the benefit of priority to prior-filed provisional Application No. 60/687,619.

/Boris Milef/

Boris Milef
PCT Legal Examiner
PCT Legal Administration

ATTACHMENT: Corrected Filing Receipt

UNITED STATES PATENT AND TRADEMARK OFFICE

Commissioner for Patents
United States Patent and Trademark Office
P.O. Box 1450
Alexandria, VA 22313-1450
www.uspto.gov

MAILED

MAR 14 2011

PCT LEGAL ADMINISTRATION

DENNISON, SCHULTZ & MACDONALD
1727 KING STREET
SUITE 105
ALEXANDRIA VA 22314

In re Application of	:	
KERMAN et al.	:	
Application No.: 11/914,699	:	DECISION
PCT No.: PCT/FR2006/001162	:	
Int. Filing Date: 22 May 2006	:	
Priority Date: 30 May 2005	:	
Attorney Docket No.: 07152	:	
For: CONTAINER WITH A POLYGONAL NECK	:	

This is a decision on applicants' petition under 37 CFR 1.47(a) filed 24 March 2008 in the United States Patent and Trademark Office (USPTO). The petition is **DISMISSED** without prejudice.

BACKGROUND

On 22 May 2006, applicants filed international application PCT/FR2006/001162, which designated the United States and claimed a priority date of 30 May 2005. A copy of the international application was communicated from the International Bureau to the USPTO on 07 December 2006. The thirty-month period for paying the basic national fee in the United States expired at midnight on 30 November 2007.

On 16 November 2007, applicants filed a submission for entry into the national stage in the United States which was accompanied by, *inter alia*, the U.S. Basic National Fee.

On 18 March 2008, the United States Designated/Elected Office (DO/EO/US) issued a NOTIFICATION OF MISSING REQUIREMENTS UNDER 35 U.S.C. 371 (Form PCT/DO/EO/905) indicating, *inter alia*, that an oath or declaration of the inventors in compliance with 37 CFR 1.497(a)-(b) was required.

On 24 March 2008, applicants filed the instant petition under 37 CFR 1.47(a) which was accompanied by, *inter alia*, a declaration of inventors, a declaration of facts by Eric Kerman, and a declaration of facts by Anne-Marie Montillot with documentation in support thereof.

DISCUSSION

A petition under 37 CFR 1.47(a) must be accompanied by: (1) the fee under 37 CFR 1.17(h); (2) factual proof that the missing joint inventor refuses to execute the application or cannot be reached after diligent effort; (3) a statement of the last known address of the missing inventor; and (4) an oath or declaration by each 37 CFR 1.47(a) applicant on his or her own behalf and on behalf of the non-signing joint inventor.

Items (1), (3), and (4) have been satisfied.

Item (2) has not been satisfied. To establish a refusal to sign, it is required that the inventor be presented with the application papers (specification, including claims, drawings, and oath or declaration). See MPEP 409.03(d). "It is reasonable to require that the inventor be presented with the application papers before a petition under 37 CFR 1.47 is granted since such a procedure ensures that the inventor is apprised of the application to which the oath or declaration is directed. *In re Gray*, 115 USPQ 80 (Comm'r Pat. 1956)." It is not clear from the evidence provided that non-signing inventor Herve Zakrzewski was presented with a copy of the application papers. The declaration of facts by Anne-Marie Montillot discusses the letter of November 13, 2007, which refers only to reference no. BR 3699, and states that it was delivered on November 29, 2007, as indicated by the copy of the return receipt for this letter. However, the copy of the return receipt provided for a delivery in November 2007 indicates two reference numbers: BR 3699 and BR 3698. Thus, it appears that the return receipt is for a different letter, which may or may not have included a copy of the instant application papers. Also, a translation of the return receipt has not been provided. (The letter dated 19 December 2007 has been considered but it does not appear to include a copy of the application papers for the instant application.) Accordingly, a copy of the return receipt for the letter dated 13 November 2007 and an English translation thereof should be provided. Alternatively, if the correspondence for which the return receipt was provided (RA 0099 7712 OFR) included a copy of the instant application papers, a copy of the letter and an English translation thereof should be provided along with a translation of the return receipt.

CONCLUSION

For the above reasons, applicants' petition under 37 CFR 1.47(a) is **DISMISSED** without prejudice.

If reconsideration on the merits of this petition is desired, a proper response must be filed within TWO (2) MONTHS from the mail date of this decision. **Failure to timely file the proper response will result in abandonment of this application.** Any reconsideration request should include a cover letter entitled "Renewed Petition Under 37 CFR 1.47(a)". No additional petition fee is required. Extensions of time may be obtained under 37 CFR 1.136(a).

Any further correspondence with respect to this matter may be filed electronically via EFS-Web selecting the document description "Petition for review and processing by the PCT Legal Office" or by mail addressed to Mail Stop PCT, Commissioner for Patents, Office of PCT Legal Administration, P.O. Box 1450, Alexandria, Virginia 22313-1450, with the contents of the letter marked to the attention of the Office of PCT Legal Administration.

/Daniel Stemmer/

Daniel Stemmer
Legal Examiner
PCT Legal Affairs
Office of Patent Cooperation Treaty
Legal Administration
Telephone: (571) 272-3301

UNITED STATES PATENT AND TRADEMARK OFFICE

Commissioner for Patents
United States Patent and Trademark Office
P.O. Box 1450
Alexandria, VA 22313-1450
www.uspto.gov

MAILED

MAY 09 2011

PCT LEGAL ADMINISTRATION

DENNISON, SCHULTZ & MACDONALD
1727 KING STREET
SUITE 105
ALEXANDRIA VA 22314

In re Application of	:	
KERMAN et al.	:	
Application No.: 11/914,699	:	DECISION
PCT No.: PCT/FR2006/001162	:	
Int. Filing Date: 22 May 2006	:	
Priority Date: 30 May 2005	:	
Attorney Docket No.: 07152	:	
For: CONTAINER WITH A POLYGONAL NECK	:	

This is a decision on applicants' renewed petition under 37 CFR 1.47(a) filed 17 March 2011 in the United States Patent and Trademark Office (USPTO). The petition is **GRANTED**.

BACKGROUND

On 22 May 2006, applicants filed international application PCT/FR2006/001162, which designated the United States and claimed a priority date of 30 May 2005. A copy of the international application was communicated from the International Bureau to the USPTO on 07 December 2006. The thirty-month period for paying the basic national fee in the United States expired at midnight on 30 November 2007.

On 16 November 2007, applicants filed a submission for entry into the national stage in the United States which was accompanied by, *inter alia*, the U.S. Basic National Fee.

On 18 March 2008, the United States Designated/Elected Office (DO/EO/US) issued a NOTIFICATION OF MISSING REQUIREMENTS UNDER 35 U.S.C. 371 (Form PCT/DO/EO/905) indicating, *inter alia*, that an oath or declaration of the inventors in compliance with 37 CFR 1.497(a)-(b) was required.

On 24 March 2008, applicants filed a petition under 37 CFR 1.47(a) which was accompanied by, *inter alia*, a declaration of inventors, a declaration of facts by Eric Kerman, and a declaration of facts by Anne-Marie Montillot with documentation in support thereof.

On 16 June 2008, the DO/EO/US mailed a NOTICE OF ACCEPTANCE OF APPLICATION UNDER 35 U.S.C. 371 AND 37 CFR 1.495 (Form PCT/DO/EO/909) according the application both a 35 U.S.C. 371(c)(1), (c)(2), and (c)(4) date and a 35 U.S.C. 371 date of 24 Marc h 2008.

On 14 March 2011, a decision was mailed dismissing without prejudice applicants' petition under 37 CFR 1.47(a).

On 17 March 2011, applicants filed the instant renewed petition under 37 CFR 1.47(a).

DISCUSSION

A petition under 37 CFR 1.47(a) must be accompanied by: (1) the fee under 37 CFR 1.17(h); (2) factual proof that the missing joint inventor refuses to execute the application or cannot be reached after diligent effort; (3) a statement of the last known address of the missing inventor; and (4) an oath or declaration by each 37 CFR 1.47(a) applicant on his or her own behalf and on behalf of the non-signing joint inventor.

As noted in the decision mailed 14 March 2011, items (1), (3), and (4) have been satisfied.

Item (2) has now been satisfied as well. As noted in the renewed petition, it has been established that non-signing inventor Herve Zakrzewski was presented with a copy of the application papers. It has also been established that Mr. Zakrzewski refuses to execute the application.

CONCLUSION

For the reasons set forth above, applicants' renewed petition under 37 CFR 1.47(a) is **GRANTED**.

As provided in 37 CFR 1.47(a), a notice of the filing of this application will be forwarded to each of the non-signing inventors at their respective last known address of record.

A notice of the filing of the application under 37 CFR 1.47(a) will be published in the Official Gazette.

Although the NOTICE OF ACCEPTANCE OF APPLICATION mailed 16 June 2008 was mailed before the petition under 37 CFR 1.47(a) was decided, it does include the correct 35 U.S.C. 371(c)(1), (c)(2), and (c)(4) date and 35 U.S.C. 371 dates and is hereby affirmed.

This application is being returned to the Office of Data Management, Publishing Division for further processing.

/Daniel Stemmer/

Daniel Stemmer
Legal Examiner
PCT Legal Affairs
Office of Patent Cooperation Treaty
Legal Administration
Telephone: (571) 272-3301

UNITED STATES PATENT AND TRADEMARK OFFICE

Commissioner for Patents
United States Patent and Trademark Office
P.O. Box 1450
Alexandria, VA 22313-1450
www.uspto.gov

MAILED

MAY 09 2011

PCT LEGAL ADMINISTRATION

Mr. Herve Zakrzewski
27 rue de Verdun
Fromereville les Vallons
55100 VERDUN
FRANCE

In re Application of
KERMAN et al.
Application No.: 11/914,699
PCT No.: PCT/FR2006/001162
Int. Filing Date: 22 May 2006
Priority Date: 30 May 2005
Attorney Docket No.: 07152
For: CONTAINER WITH A POLYGONAL NECK

Dear Mr. Zakrzewski:

You are named as an inventor in the above-captioned United States national stage application, filed under the provisions of 37 CFR 1.47(a) and 35 U.S.C. 116. Should a patent be granted, you will be designated as an inventor.

As a named inventor, you are entitled to inspect any paper in the file wrapper of the application, order copies of all or any part thereof (at a prepaid cost per 37 CFR 1.19) or to make your position of record in the application. Alternatively, you may arrange to do any of the preceding through a registered patent agent or attorney presenting written authorization from you. Joining in the application would entail the filing of an appropriate oath or declaration by you pursuant to 37 CFR 1.63.

/Daniel Stemmer/

Daniel Stemmer
PCT Legal Examiner
PCT Legal Affairs
Office of Patent Cooperation Treaty
Legal Administration
Telephone: (571) 272-3301

DENNISON, SCHULTZ & MACDONALD
1727 KING STREET
SUITE 105
ALEXANDRIA VA 22314

UNITED STATES PATENT AND TRADEMARK OFFICE

Commissioner for Patents
United States Patent and Trademark Office
P.O. Box 1450
Alexandria, VA 22313-1450
www.uspto.gov

FULBRIGHT & JAWORSKI L.L.P.
600 CONGRESS AVE.
SUITE 2400
AUSTIN TX 78701

MAILED

JAN 19 2011

OFFICE OF PETITIONS

In re Application of	:	
Hanadi Sleiman, et al.	:	
Application No. 11/914,721	:	DECISION ON PETITION
Filed: July 7, 2008	:	
Attorney Docket No. BRKP:051US/10717393	:	

This is a decision on the petition under the unintentional provisions of 37 CFR 1.137(b), filed December 15, 2010, to revive the above-identified application.

The petition is **GRANTED**.

The application became abandoned for failure to reply in a timely manner to the Restriction Requirement, mailed March 9, 2010, which set a shortened statutory period for reply of one (1) month or thirty (30) days (whichever is later). No extensions of time under the provisions of 37 CFR 1.136(a) were obtained. Accordingly, the application became abandoned on April 10, 2010. The Notice of Abandonment was mailed September 30, 2010.

The petition satisfies the requirements of 37 CFR 1.137(b) in that petitioner has supplied (1) the reply in the form of an election/amendment, (2) the petition fee of $810, and (3) a proper statement of unintentional delay.

Telephone inquiries concerning this decision should be directed to Terri Johnson at (571) 272-2991.

This application is being referred to Technology Center AU 1637 for appropriate action by the Examiner in the normal course of business on the reply received.

/Terri Johnson/
Terri Johnson
Petitions Examiner
Office of Petitions

UNITED STATES PATENT AND TRADEMARK OFFICE

Commissioner for Patents
United States Patent and Trademark Office
P.O. Box 1450
Alexandria, VA 22313-1450
www.uspto.gov

SUGHRUE MION, PLLC
2100 PENNSYLVANIA AVENUE, N.W.
SUITE 800
WASHINGTON DC 20037

MAILED
AUG 18 2011
OFFICE OF PETITIONS

In re Application of	:	
Takashi Inubushi, et al.	:	
Application No. 11/914,726	:	DECISION GRANTING PETITION
Filed: November 16, 2007	:	UNDER 37 CFR 1.313(c)(2)
Attorney No. Q104614	:	

This is a decision on the renewed petition under 37 CFR 1.313(c)(2), filed August 17, 2011, to withdraw the above-identified application from issue after payment of the issue fee.

The petition is **GRANTED**.

The above-identified application is withdrawn from issue for consideration of a submission under 37 CFR 1.114 (request for continued examination). *See* 37 CFR 1.313(c)(2).

Petitioner is advised that the issue fee paid on July 12, 2011 cannot be refunded. If, however, this application is again allowed, petitioner may request that it be applied towards the issue fee required by the new Notice of Allowance.[1]

Telephone inquiries regarding this decision should be directed to undersigned at (571) 272-1642. All other inquiries concerning the examination or status of this application should be directed to the Technology Center.

This application is being referred to Technology Center AU 3717 for processing of the request for continued examination under 37 CFR 1.114 and for consideration of the concurrently filed information disclosure statement.

/AMW/
April M. Wise
Petitions Examiner
Office of Petitions

---

[1] *The request to apply the issue fee to the new Notice may be satisfied by completing and returning the new Part B – Fee(s) Transmittal Form (along with any balance due at the time of submission). Petitioner is advised that the Issue Fee Transmittal Form must be completed and timely submitted to avoid abandonment of the application.*

Doc Code: PET.RELIEF
Document Description: Certification and Request for Disaster Relief

PTO/SB/425 (03-11)

CERTIFICATION AND REQUEST FOR RELIEF DUE TO EVENTS OF MARCH 11, 2011, IN JAPAN (Page 1 of 2)

Nonprovisional Application Number or Control Number (if applicable): 11/914,744	Patent Number (if applicable):
First Named Inventor: Li-Ying WANG	Title of Invention: OLIGONUCLEOTIDES OR THEIR FUNCTIONAL HOMOLOGUES, A COMPOSITION COMPRISING THE SAME AND A METHOD OF TREAT

APPLICANT/PATENTEE/REEXAMINATION PARTY HEREBY CERTIFIES AND REQUESTS THE FOLLOWING FOR THE ABOVE-IDENTIFIED APPLICATION/PATENT/REEXAMINATION PROCEEDING.

1. FOR PATENT APPLICATIONS AND REEXAMINATION PROCEEDINGS PENDING IN THE USPTO AS OF MARCH 11, 2011, IN WHICH A COMMUNICATION FROM THE USPTO IS SOUGHT TO BE REMAILED:

   a. One or more inventors, an assignee, or a correspondence address (for the application/proceeding) is in an area of Japan affected by the earthquake and/or tsunami of March 11, 2011.

   b. A reply or response to an Office action (final, non-final, or other), a notice of allowance, or other Office notice (hereinafter collectively referred to as "Office communication") is outstanding on March 11, 2011.

   c. The statutory or non-statutory time period set for response has not yet expired.

   d. Withdrawal and reissuance of the Office communication is requested.

   e. It is acknowledged that if this request is not made within sufficient time so that withdrawal and reissuance of the Office communication occur prior to expiration of the statutory or non-statutory time period (as permitted to be extended under 37 CFR 1.136(a), or as extended under 37 CFR 1.550(c) or 1.956), this request may not be granted.

   f. The need for the reissuance of the Office communication was due to the effects of the earthquake and/or tsunami of March 11, 2011.

   g. This request is being sent via EFS-Web or by mail directed to Mail Stop Petition, Commissioner for Patents, P.O. Box 1450, Alexandria, VA 22313-1450.

2. FOR PATENTEES WHO WERE UNABLE TO TIMELY PAY A PATENT MAINTENANCE FEE DURING THE SIX-MONTH GRACE PERIOD FOLLOWING THE WINDOW TO PAY THE MAINTENANCE FEE:

   a. The original window of time to pay the maintenance fee without the surcharge required by 37 CFR 1.20(h) expired on or after March 11, 2011.

   b. The delay in paying the fee was due to the effects of the earthquake and/or tsunami of March 11, 2011.

   c. The USPTO is requested to *sua sponte* waive the surcharge in 37 CFR 1.20(h) for paying a maintenance fee during the six-month grace period following the window to pay the maintenance fee.

   d. This request and payment of the maintenance fee during the six-month grace period following the window to pay the maintenance fee is being mailed to: Director of the United States Patent and Trademark Office, Attn: Maintenance Fee, 2051 Jamieson Avenue, Suite 300, Alexandria, VA 22314; or being transmitted via facsimile to: 571-273-6500.

CERTIFICATION AND REQUEST FOR RELIEF DUE TO EVENTS OF MARCH 11, 2011, IN JAPAN (Page 2 of 2)

3. FOR PATENTEES WHO NEED TO FILE A PETITION TO ACCEPT A DELAYED MAINTENANCE FEE PAYMENT UNDER 37 CFR 1.378(c):

   a. The maintenance fee payment was required to have been paid after March 10, 2011.

   b. A petition under 37 CFR 1.378(c) (using USPTO form PTO/SB/66 – Petition to Accept Unintentionally Delayed Payment of Maintenance Fee in an Expired Patent (37 CFR 1.378(c))) is being promptly filed accompanied by the applicable maintenance fee payment (but not the surcharge under 37 CFR 1.20(i)).

   c. The delay in payment of the maintenance fee was due to the effects of the earthquake and/or tsunami of March 11, 2011.

   d. The USPTO is requested to *sua sponte* waive the surcharge in 37 CFR 1.20(i) for accepting a delayed maintenance fee payment.

   e. It is acknowledged that the petition to accept a delayed maintenance fee payment under 37 CFR 1.378(c) must be filed by March 11, 2012, in order to be entitled to a waiver of the surcharge under 37 CFR 1.20(i).

   f. It is acknowledged that the petition to accept a delayed maintenance fee payment under 37 CFR 1.378(c) must be filed within twenty-four months from the expiration date of the patent. *See* 35 U.S.C 41(c).

   g. This request and the petition to accept a delayed maintenance fee payment under 37 CFR 1.378(c) is being submitted via EFS-Web or by mail directed to Mail Stop Petition, Commissioner for Patents, P.O. Box 1450, Alexandria, VA 22313-1450.

4. FOR NONPROVISIONAL PATENT APPLICATIONS FILED WITHOUT AN EXECUTED OATH OR DECLARATION OR PAYMENT OF THE BASIC FILING FEE, SEARCH FEE, AND/OR EXAMINATION FEE:

   a. The nonprovisional patent application was filed on or after March 11, 2011, and prior to April 12, 2011.

   b. The late filing of the oath or declaration or the basic filing fee, search fee, or examination fee was due to the effects of the earthquake and/or tsunami of March 11, 2011.

   c. The USPTO is requested to *sua sponte* waive the surcharge set forth in 37 CFR 1.16(f) for the late filing of the oath or declaration or basic filing fee, search fee, and/or examination fee.

   d. This request, together with the executed oath or declaration or the basic filing fee, search fee, or examination fee, as well as the reply to the Notice to File Missing Parts, is being submitted via EFS-Web or by mail directed to Mail Stop Missing Parts, Commissioner for Patents, P.O. Box 1450, Alexandria, VA 22313-1450.

Signature	Date May 31, 2011
Name (Print/Typed) Greg H. Kline, Ph.D.	Practitioner Registration Number 57,666

Note: *Signatures of all the inventors, § 1.41(b) applicants, or assignees of record of the entire interest or their representative(s), or reexamination requesters at the appeal stage are required in accordance with 37 CFR 1.33 and 11.18. Please see 37 CFR 1.4(d) for the form of the signature. If necessary, submit multiple forms for more than one signature, see below*.*

☐ *Total of _____ forms are submitted.

UNITED STATES PATENT AND TRADEMARK OFFICE

Commissioner for Patents
United States Patent and Trademark Office
P.O. Box 1450
Alexandria, VA 22313-1450
www.uspto.gov

MORGAN, LEWIS & BOCKIUS LLP (SF)
ONE MARKET, SPEAR STREET TOWER, SUITE 2800
SAN FRANCISCO CA 94105

MAILED
JUN 02 2011
OFFICE OF PETITIONS

In re Application of	:	
Wang et al.	:	
Application No. 11/914,744	:	DECISION ON PETITION
Filed: August 8, 2008	:	
Attorney Docket No. 066602-5001US	:	

This is a decision on the request filed May 31, 2011, seeking relief under the provisions of "Relief Available to Patent and Trademark Applicants, Patentees and Trademark Owners Affected by the Catastrophic Events of March 11, 2011 in Japan," 1365 Off. Gaz. Pat. Office 170 (April 19, 2011).

The request for relief is **GRANTED**.

In the above-identified application, an Office action was mailed on March 7, 2011. The instant petition was filed prior to the expiration of the period for reply and the certifications for granting of relief are considered to be met by the submission of the request.

Telephone inquires concerning this decision should be directed to the undersigned at 571-272-7751. All other inquires concerning either the examination or status of the application should be directed to the Technology Center.

This application is being referred to the Technology Center, Art Unit 1635 for re-mailing the Office action of March 7, 2011. The period for reply will run from the mailing date of the Office action.

/Joan Olszewski/
Joan Olszewski
Petitions Examiner
Office of Petitions

Doc Code: PET.RELIEF
Document Description: Certification and Request for Disaster Relief

PTO/SB/425 (03-11)

CERTIFICATION AND REQUEST FOR RELIEF DUE TO EVENTS OF MARCH 11, 2011, IN JAPAN (Page 1 of 2)

Nonprovisional Application Number or Control Number (if applicable): 11/914,745	Patent Number (if applicable):
First Named Inventor: Li-Ying WANG	Title of Invention: OLIGONUCLEOTIDE OR ITS FUNCTIONAL HOMOLOGUE, A COMPOSITION COMPRISING THE SAME AND A METHOD OF TREATING B

APPLICANT/PATENTEE/REEXAMINATION PARTY HEREBY CERTIFIES AND REQUESTS THE FOLLOWING FOR THE ABOVE-IDENTIFIED APPLICATION/PATENT/REEXAMINATION PROCEEDING.

1. FOR PATENT APPLICATIONS AND REEXAMINATION PROCEEDINGS PENDING IN THE USPTO AS OF MARCH 11, 2011, IN WHICH A COMMUNICATION FROM THE USPTO IS SOUGHT TO BE REMAILED:

   a. One or more inventors, an assignee, or a correspondence address (for the application/proceeding) is in an area of Japan affected by the earthquake and/or tsunami of March 11, 2011.

   b. A reply or response to an Office action (final, non-final, or other), a notice of allowance, or other Office notice (hereinafter collectively referred to as "Office communication") is outstanding on March 11, 2011.

   c. The statutory or non-statutory time period set for response has not yet expired.

   d. Withdrawal and reissuance of the Office communication is requested.

   e. It is acknowledged that if this request is not made within sufficient time so that withdrawal and reissuance of the Office communication occur prior to expiration of the statutory or non-statutory time period (as permitted to be extended under 37 CFR 1.136(a), or as extended under 37 CFR 1.550(c) or 1.956), this request may not be granted.

   f. The need for the reissuance of the Office communication was due to the effects of the earthquake and/or tsunami of March 11, 2011.

   g. This request is being sent via EFS-Web or by mail directed to Mail Stop Petition, Commissioner for Patents, P.O. Box 1450, Alexandria, VA 22313-1450.

2. FOR PATENTEES WHO WERE UNABLE TO TIMELY PAY A PATENT MAINTENANCE FEE DURING THE SIX-MONTH GRACE PERIOD FOLLOWING THE WINDOW TO PAY THE MAINTENANCE FEE:

   a. The original window of time to pay the maintenance fee without the surcharge required by 37 CFR 1.20(h) expired on or after March 11, 2011.

   b. The delay in paying the fee was due to the effects of the earthquake and/or tsunami of March 11, 2011.

   c. The USPTO is requested to *sua sponte* waive the surcharge in 37 CFR 1.20(h) for paying a maintenance fee during the six-month grace period following the window to pay the maintenance fee.

   d. This request and payment of the maintenance fee during the six-month grace period following the window to pay the maintenance fee is being mailed to: Director of the United States Patent and Trademark Office, Attn: Maintenance Fee, 2051 Jamieson Avenue, Suite 300, Alexandria, VA 22314; or being transmitted via facsimile to: 571-273-6500.

CERTIFICATION AND REQUEST FOR RELIEF DUE TO EVENTS OF MARCH 11, 2011, IN JAPAN (Page 2 of 2)

3. FOR PATENTEES WHO NEED TO FILE A PETITION TO ACCEPT A DELAYED MAINTENANCE FEE PAYMENT UNDER 37 CFR 1.378(c):

   a. The maintenance fee payment was required to have been paid after March 10, 2011.

   b. A petition under 37 CFR 1.378(c) (using USPTO form PTO/SB/66 – Petition to Accept Unintentionally Delayed Payment of Maintenance Fee in an Expired Patent (37 CFR 1.378(c))) is being promptly filed accompanied by the applicable maintenance fee payment (but not the surcharge under 37 CFR 1.20(i)).

   c. The delay in payment of the maintenance fee was due to the effects of the earthquake and/or tsunami of March 11, 2011.

   d. The USPTO is requested to *sua sponte* waive the surcharge in 37 CFR 1.20(i) for accepting a delayed maintenance fee payment.

   e. It is acknowledged that the petition to accept a delayed maintenance fee payment under 37 CFR 1.378(c) must be filed by March 11, 2012, in order to be entitled to a waiver of the surcharge under 37 CFR 1.20(i).

   f. It is acknowledged that the petition to accept a delayed maintenance fee payment under 37 CFR 1.378(c) must be filed within twenty-four months from the expiration date of the patent. *See* 35 U.S.C 41(c).

   g. This request and the petition to accept a delayed maintenance fee payment under 37 CFR 1.378(c) is being submitted via EFS-Web or by mail directed to Mail Stop Petition, Commissioner for Patents, P.O. Box 1450, Alexandria, VA 22313-1450.

4. FOR NONPROVISIONAL PATENT APPLICATIONS FILED WITHOUT AN EXECUTED OATH OR DECLARATION OR PAYMENT OF THE BASIC FILING FEE, SEARCH FEE, AND/OR EXAMINATION FEE:

   a. The nonprovisional patent application was filed on or after March 11, 2011, and prior to April 12, 2011.

   b. The late filing of the oath or declaration or the basic filing fee, search fee, or examination fee was due to the effects of the earthquake and/or tsunami of March 11, 2011.

   c. The USPTO is requested to *sua sponte* waive the surcharge set forth in 37 CFR 1.16(f) for the late filing of the oath or declaration or basic filing fee, search fee, and/or examination fee.

   d. This request, together with the executed oath or declaration or the basic filing fee, search fee, or examination fee, as well as the reply to the Notice to File Missing Parts, is being submitted via EFS-Web or by mail directed to Mail Stop Missing Parts, Commissioner for Patents, P.O. Box 1450, Alexandria, VA 22313-1450.

Signature	Date May 31, 2011
Name (Print/Typed) Greg H. Kline, Ph.D.	Practitioner Registration Number 57,666

***Note**: Signatures of all the inventors, § 1.41(b) applicants, or assignees of record of the entire interest or their representative(s), or reexamination requesters at the appeal stage are required in accordance with 37 CFR 1.33 and 11.18. Please see 37 CFR 1.4(d) for the form of the signature. If necessary, submit multiple forms for more than one signature, see below*.*

■ *Total of 1 forms are submitted.

UNITED STATES PATENT AND TRADEMARK OFFICE

Commissioner for Patents
United States Patent and Trademark Office
P.O. Box 1450
Alexandria, VA 22313-1450
www.uspto.gov

MORGAN, LEWIS & BOCKIUS LLP (SF)
ONE MARKET, SPEAR STREET TOWER, SUITE 2800
SAN FRANCISCO CA 94105

MAILED

JUN 02 2011

OFFICE OF PETITIONS

In re Application of	:	
Wang et al.	:	
Application No. 11/914,745	:	DECISION ON PETITION
Filed: August 8, 2008	:	
Attorney Docket No. 066602-5002-US	:	

This is a decision on the request filed May 31, 2011, seeking relief under the provisions of "Relief Available to Patent and Trademark Applicants, Patentees and Trademark Owners Affected by the Catastrophic Events of March 11, 2011 in Japan," 1365 Off. Gaz. Pat. Office 170 (April 19, 2011).

The request for relief is **GRANTED**.

In the above-identified application, an Office action was mailed on January 27, 2011. The instant petition was filed prior to the expiration of the period for reply and the certifications for granting of relief are considered to be met by the submission of the request.

Telephone inquires concerning this decision should be directed to the undersigned at 571-272-7751. All other inquires concerning either the examination or status of the application should be directed to the Technology Center.

This application is being referred to the Technology Center, Art Unit 1635 for re-mailing the Office action of January 27, 2011. The period for reply will run from the mailing date of the Office action.

/Joan Olszewski/
Joan Olszewski
Petitions Examiner
Office of Petitions

UNITED STATES PATENT AND TRADEMARK OFFICE

Commissioner for Patents
United States Patent and Trademark Office
P.O. Box 1450
Alexandria, VA 22313-1450
www.uspto.gov

NOVARTIS INSTITUTES FOR BIOMEDICAL RESEARCH, INC.
220 MASSACHUSETTS AVENUE
CAMBRIDGE MA 02139

MAILED
AUG 23 2011
OFFICE OF PETITIONS

In re Application of	:	
Bold et al.	:	
Application No. 11/914895	:	ON PETITION REGARDING
Filing or 371(c) Date: 11/19/2007	:	PATENT TERM ADJUSTMENT
Attorney Docket Number:	:	
34215-US-PCT	:	

This is a decision on the "PETITION REGARDING PATENT TERM ADJUSTMENT UNDER 37 C.F.R. § 1.705(b)," filed July 13, 2011. Applicants petition for reconsideration of the patent term adjustment calculation to include an additional Applicant delay of 35 days in connection with the filing of an Information Disclosure Statement ("IDS"), and Office delays of 377 days pursuant to 35 U.S.C. 154(b), in connection with the Office's failure to issue the patent within 3 years of the filing date.

The Application for Patent Term Adjustment Including Request for Reconsideration of Patent Term Adjustment ("PTA") under 37 CFR 1.705(b), as it relates to the assertion that the Office erred in failing to calculate a delay of 35 days, is **GRANTED to the EXTENT INDICATED**.

The Request for Reconsideration of Patent Term Adjustment and Application for Patent Term Adjustment Under 37 CFR 1.705(b), as it relates to Office delays of 377 days pursuant to 35 U.S.C. 154(b) in connection with the Office's failure to issue the patent within 3 years of the filing date, is **DISMISSED as PREMATURE**.

On April 15, 2011, the Office mailed the Determination of Patent Term Adjustment under 35 U.S.C. 154(b) in the above-identified application. The Notice stated that the patent term adjustment (PTA) to date is five hundred thirty-six (536) days.

On July 13, 2011, applicant timely submitted the instant application for patent term adjustment[1]. Applicants request that the Determination of Patent Term Adjustment be corrected to include an additional Applicant delay of 35 days in connection with the filing of an Information Disclosure Statement ("IDS"), filed September 14, 2010, after filing an Amendment in response to a restriction requirement on August 10, 2010, and an adjustment of 377 days pursuant to 35 U.S.C. 154(b).

[1] PALM records show that the Issue Fee payment was received in the Office on July 13, 2011.

A review of Office records confirms that the Office errantly neglected to assess a reduction in accordance with 37 CFR 1.704(c)(8) in connection with the IDS filed September 14, 2010. The reduction commenced August 11, 2010, the day after the date the initial Amendment in reply to the restriction requirement was filed, and ending on the date that the IDS, filed September 14, 2010, was filed.

A further review of Office records also confirms that the Office neglected to assess a reduction for the period of abandonment of the application. Office records confirm that the application as-filed included a petition to revive the application, which was granted in a decision mailed October 10, 2008. The period of reduction of 120 days pursuant to 37 CFR 1.704(c)(3), is calculated beginning on the date of abandonment, November 19, 2007, and ending on the date that is four months after the date the grantable petition to revive the application was filed.

In view thereof, the correct determination of patent term adjustment at the time of the mailing of the Notice of Allowance is **381 days**, (536 days of PTO delay, reduced by 155 days of applicant delay), subject to any terminal disclaimer.

As to the Office's failure to issue the patent within 3 years of the filing date, knowledge of the actual date the patent issues is required to calculate the amount, if any, of additional patent term patentee is entitled to for Office failure to issue the patent within 3 years. See § 1.702(b). (This is true even where a request for continued examination (RCE) was filed). The computer will not undertake the § 1.702(b) calculation until the actual date of issuance of the patent has been determined. Likewise, the computer will not calculate any further Office delay under § 1.702(a)(4) or applicant delay under § 1.704(c)(10) until the actual date of issuance of the patent has been determined. As such, the Office cannot make a determination on the correctness of the patent term adjustment until the patent has issued.

Requesting reconsideration of the patent term adjustment to be indicated on the patent under 37 CFR 1.705(b) based on the initial determination of patent term adjustment and a projected issuance date of the patent (or even the filing date of the request for continued examination) is premature. Accordingly, it is appropriate to dismiss as premature such a request.

Rather than file an application for patent term adjustment under 37 CFR 1.705(b) contesting the 37 CFR 1.702(b) calculation at the time of the mailing of the notice of allowance, applicant is advised that they may wait until the time of the issuance of the patent and file a request for reconsideration of the patent term adjustment pursuant to 37 CFR 1.705(d). As the USPTO does not calculate the amount of time earned pursuant to 37 CFR 1.702(b) until the time of the issuance of the patent, the Office will consider any request for reconsideration of the patent term adjustment due to an error in the calculation of 37 CFR 1.702(b) to be timely if the request for reconsideration is filed within two months of the issuance of the patent. However, as to all other bases for contesting the initial determination of patent term adjustment received with the notice of allowance, applicant must timely file an application for patent term adjustment prior to the payment of the issue fee[2].

---

[2] For example, if applicant disputes both the calculation of patent term adjustment under 37 CFR 1.702(a)(1) for Office failure to mail a first Office action or notice of allowance not later than fourteen months after the date on which the application was filed and under 37 CFR 1.702(b) for Office failure to issue a patent within three years of the actual filing date of the application, then applicant must still timely file an application for patent term adjustment

The Office acknowledges submission of the $200.00 fee set forth in 37 CFR 1.18(e) for consideration of the application for patent term adjustment under 37 CFR 1.705(b).

Any request for reconsideration of the patent term adjustment indicated on the patent, including any request as it relates to the Office's failure to issue the patent within 3 years of the filing date, must be timely filed within 2 months after issuance pursuant to 37 CFR 1.705(d) and **must** include payment of the required fee under 37 CFR 1.18(e).

The Office of Data Management has been advised of this decision. This application is being referred to the Office of Data Management for issuance of the patent. The patent term adjustment indicated on the patent (as shown on the Issue Notification mailed about three weeks prior to patent issuance) will include any additional adjustment accrued both for Office delay in issuing the patent more than four months after payment of the issue fee and satisfaction of all outstanding requirements, and for the Office taking in excess of three years to issue the patent (to the extent that the three-year period does not overlap with periods already accorded).

Telephone inquiries specific to this matter should be directed to the undersigned at (571) 272-3232.

/DLW/

Derek L. Woods
Attorney
Office of Petitions

Enclosure: Copy of Adjustment PAIR Calculations

---

prior to the payment of the issue fee to contest the calculation of Office delay in issuing a first Office action or notice of allowance. See 37 CFR 1.705(b) and 35 U.S.C. 154(b)(3)(B). A dispute as to the calculation of the §1.702(a)(1) period raised on request for reconsideration of patent term adjustment under 37 CFR 1.705(d) will be dismissed as untimely filed.

Patent Term Adjustments

PTA/PTE Information | Patent Term Adjustment | Patent Term Extension

Application Number*: 11914895 Search · Explanation of PTA Calculation · Explanation of PTE Calculation

PTA Calculations for Application: 11914895

Application Filing Date	11/19/2007	OverLapping Days Between (A and B) or (A and C)	0
Issue Date of Patent		Non-Overlapping USPTO Delays:	536
A Delays	536	PTO Manual Adjustment	-155
B Delays	0	Applicant Delay (APPL)	0
C Delays	0	Total PTA (days)	381

* - Sorted Column

File Contents History

Action Number	Action Recorded Date	Action Due Date	Action Code	Action Description	Duration PTO	Duration APPL	Parent Action Number
77	08/19/2011		P028	Adjustment of PTA Calculation by PTO		155	0
62	04/15/2011		MN/=.	Mail Notice of Allowance			0
61	04/12/2011		OAR	Office Action Review			0
60	04/12/2011		OAR	Office Action Review			0
58	04/11/2011		OAR	Office Action Review			0
57	04/11/2011		OAR	Office Action Review			0
52	03/30/2011		OAR	Office Action Review			0
51	03/30/2011		IREV	Issue Revision Completed			0
50	03/30/2011		DVER	Document Verification			0
49	03/30/2011		N/=.	Notice of Allowance Data Verification Completed			0
48	03/30/2011		EX.A	Examiner's Amendment Communication			0
47	03/28/2011		CNTA	Allowability Notice			0
44	01/11/2011		FWDX	Date Forwarded to Examiner			0
43	12/16/2010		A...	Response after Non-Final Action			0
45	12/02/2010		IDSC	Information Disclosure Statement considered			0
42	12/02/2010		M844	Information Disclosure Statement (IDS) Filed			0
41	12/02/2010		RCAP	Reference capture on IDS			0
40	12/02/2010		WIDS	Information Disclosure Statement (IDS) Filed			0
39	09/16/2010		ELC_RVW	Electronic Review			0
38	09/16/2010		EML_NTF	Email Notification			0
36	09/16/2010		MCTNF	Mail Non-Final Rejection			0
46	09/14/2010		IDSC	Information Disclosure Statement considered			0
37	09/14/2010		WIDS	Information Disclosure Statement (IDS) Filed			0
35	09/13/2010		CTNF	Non-Final Rejection			0
27	08/16/2010		FWDX	Date Forwarded to Examiner			0
26	08/10/2010		ELC.	Response to Election / Restriction Filed			0
25	08/10/2010		XT/G	Request for Extension of Time - Granted			0
24	07/12/2010		ELC_RVW	Electronic Review			0
23	07/09/2010		EML_NTF	Email Notification			0
22	07/09/2010	01/19/2009	MCTRS	Mail Restriction Requirement	536		9
21	07/06/2010		CTRS	Restriction/Election Requirement			0
20	12/17/2009		C.ADB	Correspondence Address Change			0
19	08/19/2009		DOCK	Case Docketed to Examiner in GAU			0
18	03/12/2009		DOCK	Case Docketed to Examiner in GAU			0
17	12/29/2008		PG-ISSUE	PG-Pub Issue Notification			0
16	12/04/2008		TSSCOMP	IFW TSS Processing by Tech Center Complete			0
15	12/04/2008		DOCK	Case Docketed to Examiner in GAU			0
12	10/10/2008		MPREV	Mail-Petition to Revive Application - Granted			0
11	10/09/2008		PREV	Petition to Revive Application - Granted			0
10	09/29/2008		OIPE	Application Dispatched from OIPE			0
8	09/15/2008		PGPC	Sent to Classification Contractor			0
7	09/15/2008		FLRCPT.O	Filing Receipt			0
6	09/15/2008		M903	Notice of DO/EO Acceptance Mailed			0
4	05/20/2008		L194	Cleared by OIPE CSR			0
2	11/20/2007		SCAN	IFW Scan & PACR Auto Security Review			0
14	11/19/2007		A.PE	Preliminary Amendment			0
13	11/19/2007		RQPR	Request for Foreign Priority (Priority Papers May Be Included)			0
9	11/19/2007		371COMP	371 Completion Date			0
5	11/19/2007		PET.	Petition Entered			0
1	11/19/2007		IEXX	Initial Exam Team nn			0
0.5	04/12/2006		NEFILE	International Filing date			0

Export to: Excel

UNITED STATES PATENT AND TRADEMARK OFFICE

Commissioner for Patents
United States Patent and Trademark Office
P.O. Box 1450
Alexandria, VA 22313-1450
www.uspto.gov

NOVARTIS INSTITUTES FOR BIOMEDICAL
RESEARCH, INC.
220 MASSACHUSETTS AVENUE
CAMBRIDGE MA 02139

MAILED
DEC 23 2011
OFFICE OF PETITIONS

In re Patent of	:	
Boldet al.	:	
Pat. Num.: 8,030,311	:	
Issue Date: 10/04/2011	:	
Application No. 11/914895	:	ON PETITION REGARDING
Filing or 371(c) Date: 11/19/2007	:	PATENT TERM ADJUSTMENT
Attorney Docket Number:	:	
34215-US-PCT	:	

This is a decision on the petition filed December 1, 2011, which is being treated as a petition under 37 CFR 1.705(d) requesting that the patent term adjustment indicated on the above-identified patent be corrected to indicate that the term of the above-identified patent is extended or adjusted by eight hundred twenty (820) days. The requested correction includes an assertion that (1) Patentee is properly assessed a reduction of 35 days pursuant to 37 CFR 1.704(c)(8), and (2) the Office erred in calculating the "B delay" period.

The request for reconsideration of patent term adjustment is **DISMISSED**.

On October 4, 2011, the above-identified application matured into U.S. Patent No. 8,030,311. The patent issued with a PTA of 735 days. The present request for reconsideration of patent term adjustment was timely filed within two months of the issue date of the patent.

Patentees provide that Patentee is properly assessed a reduction of 35 days pursuant to 37 CFR 1.704(c)(8), in connection with the filing of an Information Disclosure Statement ("IDS"), on September 15, 2008, 35 days after filing a reply to an Office action on August 10, 2008.

Patentees also aver that the Office erred in calculating the period of adjustment pursuant to 35 U.S.C. 154(b)(1)(B) and 37 CFR 1.702(b). Patentees provide that the "B delay" period commenced on November 19, 2010, three years after the application completed all its requirements under 35 U.S.C. 371, on November 19, 2007.

Patentees' arguments have been carefully considered. A review of the application file history reveals that in a decision on an application for patent term adjustment, mailed August 23, 2011, the Office properly assessed Patentees a reduction of 35 days pursuant to 37 CFR 1.704(c)(8), and a reduction of 120 days pursuant to 37 CFR 1.704(c)(3).

A further review of the application file history reveals that Patentee's have incorrectly calculated the period of adjustment under 35 U.S.C. 154(b)(1)(B) and 37 CFR 1.702(b) for failing to issue the patent within three years of the 'actual filing date' of the application. The period of adjustment under 35 U.S.C. 154(b)(1)(B) and 37 CFR 1.702(b) is the number of days in the period beginning on the day after the date that is three years after the date on which the national stage commenced under 35 U.S.C. 371(b) or (f)). See MPEP § 2730. The commencement date is the date 30 months from the earliest priority date claimed in the international application[1]. In this application, the earliest priority date claimed, as shown on the Notice of Acceptance of Application Under 35 U.S.C. § 371 and 37 CFR 1.495, mailed September 15, 2008, is April 14, 2005. As the expiration of the 30-month period pursuant to 35 U.S.C. 371(b) fell on a Sunday (October 14, 2007), the period expired on the subsequent business day . See PCT Rule 80.5. Accordingly, the commencement date is Monday, October 15, 2007, and the period of adjustment pursuant to 37 CFR 1.703(b) began October 16, 2010, the day after the date that is three years after the commencement date, and ended on October 4, 2011 - the issue date of the patent - and is properly calculated at 354 days.

In view thereof, it is concluded that the patent correctly issued with a revised Patent Term Adjustment of seven hundred thirty-five days (735), and no adjustment to the patent term will be made.

Receipt is acknowledged of the $200.00 fee set forth in 37 CFR 1.18(e). No additional fees are required.

Any request for reconsideration of this decision must be submitted within ONE MONTH of the mail date indicated herein. The time period for seeking reconsideration is not subject to extension under 37 CFR 1.136.

Nothing in this decision shall be construed as a waiver of the requirement of 35 U.S.C. 154(b)(4) that any civil action by an applicant dissatisfied with a determination made by the Director under 35 U.S.C. 154(b)(3) be filed in the United States District Court for the District of Columbia within 180 days after the grant of the patent.

Telephone inquiries specific to this matter should be directed to the undersigned at (571) 272-3232.

/DLW/

Derek L. Woods
Attorney
Office of Petitions

[1] The commencement date may be earlier than 30 months where (1) an applicant expressly requested early commencement, and completed all requirements under 35 U.S.C. 371(c), or (2) Demand was timely filed requesting a change in commencement from 20 to 30 months. Neither is applicable here.

UNITED STATES PATENT AND TRADEMARK OFFICE

Commissioner for Patents
United States Patent and Trademark Office
P.O. Box 1450
Alexandria, VA 22313-1450
www.uspto.gov

FOX ROTHSCHILD LLP
PRINCETON PIKE CORPORATE CENTER
997 LENOX DRIVE, BLDG. #3
LAWRENCEVILLE NJ 08648

MAILED
MAY 13 2011
OFFICE OF PETITIONS

In re Application of	:	
Lynch et al.	:	
Application Number: 11/914909	:	DECISION
Filing or 371(c) Date: 09/09/2008	:	ON PETITION
Attorney Docket Number: 70439.00208	:	

This is a decision on the "Petition for Withdrawal of Terminal Disclaimed Under 37 CFR 1.182," filed March 28, 2011, to withdraw the Terminal Disclaimer filed March 22, 2011.

The petition is **granted**.

Petitioner files the present petition and requests withdrawal of the Terminal Disclaimer. Petitioner provides that the Terminal Disclaimer filed March 22, 2011is in unnecessary, and Petitioner requests withdrawal of the Terminal Disclaimer with the present petitioner.

The Manual of Patent Examining Procedure ("MPEP") 1490, which states:

> While the filing and recordation of an unnecessary terminal disclaimer has been characterized as an "un-happy circumstance" in In re Jentoft, 392 F.2d 633, 157 USPQ 363 (CCPA 1968), there is no statutory prohibition against nullifying or otherwise canceling the effect of a recorded terminal disclaimer which was erroneously filed before the patent issues. Since the terminal disclaimer would not take effect until the patent is granted, and the public has not had the opportunity to rely on the terminal disclaimer, relief from this unhappy circumstance may be available by way of petition or by refiling the application (other than by refiling it as a CPA).

As the Examiner has agreed to the withdrawal of the Terminal Disclaimer, the petition is granted.

The application is being referred to Technology Center Art Unit 1765 for withdrawal of the Terminal Disclaimer, filed March 22, 2011.

Telephone inquiries concerning this matter should be directed to the undersigned at (571) 272-3232.

/DLW/

Derek L. Woods
Attorney
Office of Petitions

UNITED STATES PATENT AND TRADEMARK OFFICE

Commissioner for Patents
United States Patent and Trademark Office
P.O. Box 1450
Alexandria, VA 22313-1450
www.uspto.gov

MAILED
JUN 20 2011
OFFICE OF PETITIONS

FISH & RICHARDSON P.C. (DC)
P.O. BOX 1022
MINNEAPOLIS MN 55440-1022

In re Application of	:	
YOON, et al	:	
Application No. 11/914,949	:	DECISION ON PETITION
Filed: July 8, 2009	:	
Attorney Docket No. 19819-182US1 OPP-WZ-2007-	:	

This is a decision on the petition under the unintentional provisions of 37 CFR 1.137(b), filed April 25, 2011, to revive the above-identified application.

The petition is **GRANTED**.

The application became abandoned for failure to timely pay the issue and publication fees on or before February 28, 2011, as required by the Notice of Allowance and Fee(s) Due, mailed November 29, 2010, which set a statutory period for reply of three (3) months. Accordingly, the application became abandoned on March 1, 2011.

The petition satisfies the requirements of 37 CFR 1.137(b) in that petitioner has supplied (1) the reply in the form of payment of the issue fee of $1510 and publication fee of $300; (2) the petition fee of $1620; and (3) a proper statement of unintentional delay.

As authorized, the issue and publication fees of $1810 will be charged to Deposit Account No. 06-1050.

The submission of the Request for Continued Examination (RCE) is acknowledged and will be processed by the Technology Center.

Telephone inquiries concerning this decision should be directed to the undersigned at (571) 272-6735.

All other telephone inquiries should be directed to the Technology Center at (571) 272-2400.

The application is being referred to Technology Center AU 2484 for processing of the RCE within the normal course of business.

/Diane C. Goodwyn/
Diane C. Goodwyn
Petitions Examiner
Office of Petitions

UNITED STATES PATENT AND TRADEMARK OFFICE

Commissioner for Patents
United States Patent and Trademark Office
P.O. Box 1450
Alexandria, VA 22313-1450
www.uspto.gov

Husch Blackwell LLP
Husch Blackwell Sanders LLP Welsh & Katz
120 S RIVERSIDE PLAZA
22ND FLOOR
CHICAGO IL 60606

MAILED
JUL 05 2011
OFFICE OF PETITIONS

In re Application of	:	
Asami Tadokoro	:	
Application No. 11/914,973	:	DECISION ON PETITION
Filed: November 20, 2007	:	
Attorney Docket No. 0553-0632	:	

This is a decision on the petition under the unintentional provisions of 37 CFR 1.137(b), filed June 21, 2011, to revive the above-identified application.

The petition is **GRANTED**.

The application became abandoned for failure to properly reply in a timely manner to the non-final Office action mailed October 20, 2010, which set a shortened statutory period for reply of three (3) months. Three months extensions of time under the provisions of 37 CFR 1.136(a) were obtained. Accordingly, the application became abandoned on January 21, 2011. A Notice of Abandonment was mailed on May 4, 2011.

The petition satisfies the requirements of 37 CFR 1.137(b) in that petitioner has supplied (1) the reply in the form of an amendment, (2) the petition fee of $1,620 and (3) a proper statement of unintentional delay. Accordingly, the amendment is accepted as being unintentionally delayed.

It is not apparent whether the person signing the statement of unintentional delay was in a position to have firsthand or direct knowledge of the facts and circumstances of the delay at issue. Nevertheless, such statement is being treated as having been made as the result of a reasonable inquiry into the facts and circumstances of such delay. See 37 CFR 10.18(b) and Changes to Patent Practice and Procedure; Final Rule Notice, 62 Fed. Reg. 53131, 53178 (October 10, 1997), 1203 Off. Gaz. Pat. Office 63, 103 (October 21, 1997). In the event that such an inquiry has not been made, petitioner must make such an inquiry. If such inquiry results in the discovery that it is not correct that the entire delay in filing the required reply from the due date for the reply until the filing of a grantable petition pursuant to 37 CFR 1.137(b) was unintentional, petitioner must notify the Office.

Telephone inquiries concerning this decision should be directed to Kimberly Inabinet at (571) 272-4618.

This application is being referred to Technology Center AU 2436 for appropriate action by the Examiner in the normal course of business on the reply received June 21, 2011.

/Kimberly Inabinet/

Kimberly Inabinet
Petitions Examiner
Office of Petitions

SPE RESPONSE FOR CERTIFICATE OF CORRECTION

DATE : 01-14-12

TO SPE OF : ART UNIT 1766

SUBJECT : Request for Certificate of Correction for Appl. No.: 11/915061 Patent No.: 7985353

CofC mailroom date: 11-28-11

Please respond to this request for a certificate of correction within 7 days.

FOR IFW FILES:

Please review the requested changes/corrections as shown in the **COCIN** document(s) in the IFW application image. No new matter should be introduced, nor should the scope or meaning of the claims be changed.

Please complete the response (see below) and forward the completed response to scanning using document code **COCX**.

FOR PAPER FILES:

Please review the requested changes/corrections as shown in the attached certificate of correction. Please complete this form (see below) and forward it with the file to:

Certificates of Correction Branch (CofC)
Randolph Square – 9D10-A
Palm Location 7580

Note: _____

_____

A Green

Angela Green 571.272.9005

CofC Branch 703-756-1814

Thank You For Your Assistance

The request for issuing the above-identified correction(s) is hereby:

Note your decision on the appropriate box.

☑ **Approved** — **All** changes apply.

☐ **Approved in Part** — Specify below which changes **do not** apply.

☐ **Denied** — State the reasons for denial below.

Comments: _____

SPE Randy Gulakowski

Digitally signed by Randy Gulakowski
DN: cn=Randy Gulakowski, o, ou=1766, email=randy.gulakowski@uspto.gov, c=US
Date: 2012.02.06 08:36:16 -05'00'

Art Unit

Best Available Copy

SPE RESPONSE FOR CERTIFICATE OF CORRECTION

DATE : 01-14-12

TO SPE OF : ART UNIT 1766

SUBJECT : Request for Certificate of Correction for Appl. No.: 11/915061 Patent No.: 7985353

CofC mailroom date: 11-28-11

Please respond to this request for a certificate of correction within 7 days.

FOR IFW FILES:

Please review the requested changes/corrections as shown in the **COCIN** document(s) in the IFW application image. No new matter should be introduced, nor should the scope or meaning of the claims be changed.

Please complete the response (see below) and forward the completed response to scanning using document code **COCX**.

FOR PAPER FILES:

Please review the requested changes/corrections as shown in the attached certificate of correction. Please complete this form (see below) and forward it with the file to:

Certificates of Correction Branch (CofC)
Randolph Square – 9D10-A
Palm Location 7580

Note: _____

_____

A. Green

Angela Green 571.272.9005

CofC Branch 703-756-1814

Thank You For Your Assistance

The request for issuing the above-identified correction(s) is hereby:
Note your decision on the appropriate box.

- ☒ **Approved** — **All** changes apply.
- ☐ **Approved in Part** — Specify below which changes **do not** apply.
- ☐ **Denied** — State the reasons for denial below.

Comments: _____

SPE /Randy Gulakowski/ **Art Unit** 1766

UNITED STATES PATENT AND TRADEMARK OFFICE

Commissioner for Patents
United States Patent and Trademark Office
P.O. Box 1450
Alexandria, VA 22313-1450
www.uspto.gov

Arnold & Porter LLP (24126)
Attn: IP Docketing Dept.
555 Twelfth Street, N.W.
Washington DC 20004-1206

MAILED

NOV 10 2010

PCT LEGAL ADMINISTRATION

In re Application of	:	
FLORES, Heather, et al.	:	
Application No.: 11/915,110	:	DECISION
PCT No.: PCT/US2006/018137	:	
Int. Filing Date: 10 May 2006	:	ON PETITION UNDER
Priority Date: 24 May 2005	:	
Attorney Docket No.: 39766-0174	:	37 CFR 1.137(b)
For: APO-2 LIGAND/TRAIL	:	
FORMULATIONS	:	

This is a decision on applicants' renewed Petition to Revive an Unintentionally Abandoned Under 37 C.F.R. §1.137(b), filed in the above-captioned application on 26 August 2010.

BACKGROUND

On 13 July 2009, the Office mailed Notice to Comply With Requirements For Patent Applications Containing Nucleotide Sequence And/Or Amino Acid Sequence Disclosures (Form PCT/DO/EO/922) indicating that a Sequence Listing in computer readable format was required. It set a two month period for response, with extensions of time available under 37 CFR 1.136(a).

On 11 February 2010, applicant submitted the instant petition to vacate the holding of abandonment.

On 14 May 2010, the Office dismissed the petition to withdraw the holding of abandonment.

On 02 June 2010, applicant filed this petition to revive under 37 CFR 1.137(b).

On 30 July 2010, the Office mailed Decision On Petition Under 37 CFR 1.137(b) dismissing applicants' petition as it lacked the required reply.

On 26 August 2010, applicants filed this renewed petition.

DISCUSSION

A petition to revive an abandoned application under 37 CFR 1.137(b) must be filed without intentional delay from the time the application became abandoned and/or applicant first

became aware of the abandoned status of the application. A petition under 37 CFR 1.137(b) must be accompanied by (1) a statement that the entire delay in filing the required reply from the due date for the reply until the filing of a grantable petition was unintentional, (2) the required reply, (3) the petition fee required by law (37 CFR 1.17(m)), and (4) a terminal disclaimer and fee (if the international application was filed prior to June 8, 1995).

Items (1), (3) and (4) have been satisfied. A second payment of the petition fee was not required. It will be refunded to deposit account no. 50-2387, as authorized.

As to item (2), has now been satisfied.

CONCLUSION

For the above reasons, applicant's petition under 37 CFR 1.137(b) is **GRANTED**.

This application is being referred to the national phase processing branch of the Office of Patent Application Processing for further processing consistent with this decision.

/Erin P. Thomson/

Erin P. Thomson
Attorney Advisor
PCT Legal Administration

Telephone: 571-272-3292

UNITED STATES PATENT AND TRADEMARK OFFICE

Commissioner for Patents
United States Patent and Trademark Office
P.O. Box 1450
Alexandria, VA 22313-1450
www.uspto.gov

SCHWABE WILLIAMSON & WYATT
PACWEST CENTER, SUITE 1900
1211 SW FIFTH AVENUE
PORTLAND, OR 97204

MAILED

NOV 22 2010

OFFICE OF PETITIONS

In re Application of	:	
MENG, Zhiguo et al.	:	
Application No. 11/915,120	:	DECISION ON PETITION
Filed: November 20, 2007	:	TO WITHDRAW
Attorney Docket No. **P1933US00**	:	FROM RECORD
	:	

This is a decision on the Request to Withdraw as attorney or agent of record under 37 C.F.R. § 1.36(b), filed October 12, 2010.

The request is **NOT APPROVED** because it is moot.

A review of the file record indicates that the power of attorney to Schwabe Williamson & Wyatt has been revoked by the assignee of the patent application on October 20, 2010. Accordingly, the request to withdraw under 37 C.F.R. § 1.36(b) is moot.

All future communications from the Office will continue to be directed to the below-listed address until otherwise notified by applicant.

Telephone inquires concerning this decision should be directed to Michelle R. Eason at 571-272- 4231.

Michelle R. Eason
Paralegal Specialist
Office of Petitions

cc: **ELLA CHEONG HONG KONG**
5001 HOPEWELL CENTRE, 183 QUEEN'S ROAD EAST,
WAN CHAI HK HONG KONG

UNITED STATES PATENT AND TRADEMARK OFFICE

Commissioner for Patents
United States Patent and Trademark Office
P.O. Box 1450
Alexandria, VA 22313-1450
www.uspto.gov

BOZICEVIC, FIELD & FRANCIS LLP
1900 UNIVERSITY AVENUE
SUITE 200
EAST PALO ALTO, CA 94303

MAILED
JUL 05 2011
OFFICE OF PETITIONS

In re Application of	:	
MILNER, et al	:	
Application No. 11/915,147	:	DECISION ON PETITION
Filed: May 12, 2008	:	TO WITHDRAW
Attorney Docket No. AURAB 1312	:	FROM RECORD
	:	

This is a decision on the Request to Withdraw as attorney or agent of record under 37 C.F.R. § 1.36(b), filed June 3, 2011.

The request is **NOT APPROVED** because it is moot.

A review of the file record indicates that the power of attorney to Carol L. Francis, has been revoked by the applicant of the patent application on June 15, 2011. Accordingly, the request to withdraw under 37 C.F.R. § 1.36(b) is moot.

Telephone inquires concerning this decision should be directed to the undersigned at (571) 272-6735.

/Diane C. Goodwyn/
Diane C. Goodwyn
Petitions Examiner
Office of Petitions

UNITED STATES PATENT AND TRADEMARK OFFICE

Commissioner for Patents
United States Patent and Trademark Office
P.O. Box 1450
Alexandria, VA 22313-1450
www.uspto.gov

Decision Date : September 7,2011

In re Application of :

Guobao Zhang

DECISION ON PETITION

UNDER CFR 1.313(c)(2)

Application No : 11915148

Filed : 20-Nov-2007

Attorney Docket No :

This is an electronic decision on the petition under 37 CFR 1.313(c)(2), filed September 7,2011, to withdraw the above-identified application from issue after payment of the issue fee.

The petition is **GRANTED.**

The above-identified application is withdrawn from issue for consideration of a submission under 37 CFR 1.114 (request for continued examination). See 37 CFR 1.313(c)(2).

Petitioner is advised that the issue fee paid in this application cannot be refunded. If, however, this application is again allowed, petitioner may request that it be applied towards the issue fee required by the new Notice of Allowance.

Telephone inquiries concerning this decision should be directed to the Patent Electronic Business Center (EBC) at 866-217-9197.

This application file is being referred to Technology Center AU 1629 for processing of the request for continuing examination under 37 CFR 1.114 .

Office of Petitions

Doc Code: PET.AUTO Document Description: Petition automatically granted by EFS-Web	PTO/SB/140 U.S. Patent and Trademark Office Department of Commerce

Electronic Petition Request	**PETITION TO WITHDRAW AN APPLICATION FROM ISSUE AFTER PAYMENT OF THE ISSUE FEE UNDER 37 CFR 1.313(c)**
Application Number	11915148
Filing Date	20-Nov-2007
First Named Inventor	Guobao Zhang
Art Unit	1629
Examiner Name	SAVITHA RAO
Attorney Docket Number	
Title	PYRIMIDINE-SUBSTITUTED BENZIMIDAZOLE DERIVATIVES AS PROTEIN KINASE INHIBITORS

An application may be withdrawn from issue for further action upon petition by the applicant. To request that the Office withdraw an application from issue, applicant must file a petition under this section including the fee set forth in § 1.17(h) and a showing of good and sufficient reasons why withdrawal of the application from issue is necessary.

APPLICANT HEREBY PETITIONS TO WITHDRAW THIS APPLICATION FROM ISSUE UNDER 37 CFR 1.313(c).

A grantable petition requires the following items:
(1) Petition fee; and
(2) One of the following reasons:
(a) Unpatentability of one or more claims, which must be accompanied by an unequivocal statement that one or more claims are unpatentable, an amendment to such claim or claims, and an explanation as to how the amendment causes such claim or claims to be patentable;
(b) Consideration of a request for continued examination in compliance with § 1.114 (for a utility or plant application only); or
(c) Express abandonment of the application. Such express abandonment may be in favor of a continuing application, but not a CPA under 37 CFR 1.53(d).

Petition Fee

- ☐ Applicant claims SMALL ENTITY status. See 37 CFR 1.27.
- ☐ Applicant is no longer claiming SMALL ENTITY status. See 37 CFR 1.27(g)(2).
- ☐ Applicant(s) status remains as SMALL ENTITY.
- ☒ Applicant(s) status remains as other than SMALL ENTITY

Reason for withdrawal from issue

○ One or more claims are unpatentable

◉ Consideration of a request for continued examination (RCE) (List of Required Documents and Fees)

○ Applicant hereby expressly abandons the instant application (any attorney/agent signing for this reason must have power of attorney pursuant to 37 CFR 1.32(b)).

RCE request,submission, and fee.

☐ I certify, in accordance with 37 CFR 1.4(d)(4) that : The RCE request ,submission, and fee have already been filed in the above-identified application on

☒ Are attached.

THIS PORTION MUST BE COMPLETED BY THE SIGNATORY OR SIGNATORIES

I certify, in accordance with 37 CFR 1.4(d)(4) that I am:

◉ An attorney or agent registered to practice before the Patent and Trademark Office who has been given power of attorney in this application.

○ An attorney or agent registered to practice before the Patent and Trademark Office, acting in a representative capacity.

○ A sole inventor

○ A joint inventor; I certify that I am authorized to sign this submission on behalf of all of the inventors

○ A joint inventor; all of whom are signing this e-petition

○ The assignee of record of the entire interest that has properly made itself of record pursuant to 37 CFR 3.71

Signature	/Scott W. Reid/
Name	Scott William Reid
Registration Number	48097

UNITED STATES PATENT AND TRADEMARK OFFICE

Commissioner for Patents
United States Patent and Trademark Office
P.O. Box 1450
Alexandria, VA 22313-1450
www.uspto.gov

GENOMICS INSTITUTE OF THE
NOVARTIS RESEARCH FOUNDATION
10675 JOHN JAY HOPKINS DRIVE, SUITE E225
SAN DIEGO, CA 92121-1127

MAILED
DEC 19 2011
PCT LEGAL ADMINISTRATION

In re Application of ZHANG et al	:	
U.S. Application No.: 11/915,148	:	
PCT Application No.: PCT/US2006/025706	:	
Int. Filing Date: 30 June 2006	:	
Priority Date Claimed: 01 July 2005	:	DECISION
Attorney Docket No.: P1196US10	:	
For: PYRIMIDINE-SUBSTITUTED	:	
BENZIMIDAZOLE DERIVATIVES AS	:	
PROTEIN KINASE INHIBITORS	:	

This is in response to the petition filed 01 December 2011, which is being treated under 37 CFR 1.181. No petition fee is due.

BACKGROUND

On 30 June 2006, applicant filed international application PCT/US2006/025706, which claimed priority of an earlier United States application filed 01 July 2005. The thirty-month period for paying the basic national fee in the United States expired on 02 January 2008.

On 20 November 2007, applicant filed national stage papers in the United States Designated/Elected Office (DO/EO/US). The submission was accompanied by, *inter alia*, the basic national fee required by 35 U.S.C. 371(c)(1) and an executed declaration.

On 11 July 2008, the DO/EO/US mailed a Notice of Acceptance of Application Under 35 U.S.C. 371 (Form PCT/DO/EO/903).

On 18 October 2011, applicant filed a newly executed declaration.

On 25 October 2011, this Office mailed a communication which identified an error in one or more of the declarations.

On 01 December 2011, applicant filed the instant petition under 37 CFR 1.181.

DISCUSSION

The declarations filed on 01 December 2011 are in compliance with 37 CFR 1.497.

CONCLUSION

For the reasons above, the petition under 37 CFR 1.181 is GRANTED.

The application has an International Filing Date under 35 U.S.C. 363 of 30 June 2006, and a date under 35 U.S.C. 371(c)(1), (c)(2), and (c)(4) of 01 December 2011.

This application is being forwarded to the United States Designated/Elected Office (DO/EO/US) for further processing in accordance with this decision, including preparation and mailing of a corrected Notice of Acceptance of Application under 35 U.S.C. 371 (Form PCT/DO/EO/903) and a corrected filing receipt.

Bryan Lin

Bryan Lin
PCT Legal Examiner
PCT Legal Office

Telephone: 571-272-3303
Facsimile: 571-273-0459

UNITED STATES PATENT AND TRADEMARK OFFICE

Commissioner for Patents
United States Patent and Trademark Office
P.O. Box 1450
Alexandria, VA 22313-1450
www.uspto.gov

PHILIP S. JOHNSON
JOHNSON & JOHNSON
ONE JOHNSON & JOHNSON PLAZA
NEW BRUNSWICK NJ 08933-7003

MAILED
JUL 12 2011
OFFICE OF PETITIONS

In re Application of

Porstmann, et al. :

Application No. 11/915,204

: DECISION ON PETITION

Filed: November 21, 2007

:

Attorney Docket No. **PRD2451USPCT**

This is a decision on the petition under 37 CFR 1.137(b), filed June 20, 2011, to revive the above-identified application.

The petition is **GRANTED**.

The above-cited application became abandoned for failure to reply in a timely manner to the final Office action mailed May 6, 2010, which set a shortened statutory period for reply of three (3) months from its mailing date. No extension of time pursuant to 37 CFR 1.136(a) was obtained within the allowable period. Accordingly, the application became abandoned on August 7, 2010. A Notice of Abandonment was mailed April 19, 2011.

Examiner Chandrakumar has preliminarily determined that the amendment filed June 20, 2011, places the application in condition for allowance.

The application is being forwarded to Technology Center 1600, GAU 1625 for further processing.

Telephone inquiries concerning this decision should be directed to the undersigned at (571) 272-3222.

/Kenya A. McLaughlin/

Kenya A. McLaughlin
Petitions Attorney
Office of Petitions

UNITED STATES PATENT AND TRADEMARK OFFICE

UNITED STATES DEPARTMENT OF COMMERCE
United States Patent and Trademark Office
Address: COMMISSIONER FOR PATENTS
P.O. Box 1450
Alexandria, Virginia 22313-1450
www.uspto.gov

APPLICATION NO.	FILING DATE	FIRST NAMED INVENTOR	ATTORNEY DOCKET NO.	CONFIRMATION NO.
11/915,241	06/13/2008	Stephen Antonelli	2221.031A	4393

7590 04/07/2011
HESLIN ROTHENBERG FARLEY & MESITI PC
5 COLUMBIA CIRCLE
ALBANY, NY 12203

EXAMINER
BERCH, MARK L

ART UNIT	PAPER NUMBER
1622	

MAIL DATE	DELIVERY MODE
04/07/2011	PAPER

DECISION DISMISSING PETITION UNDER 37 CFR 1.138(d)

The declaration of express abandonment will not be recognized

This is in response to the petition under 37 CFR 1.138(d), requesting for a refund of any previously paid search fee and excess claims fee in the above-identified application.

The petition is dismissed.

The express abandonment will **not** be recognized for the reason(s) indicated below:

1. ☐ The petition was not filed in sufficient time to permit the appropriate officials to recognize the abandonment before an examination has been made of the application. See 37 CFR 1.138(d).
2. ☐ The petition was not signed by a party authorized by 37 CFR 1.33(b)(1), (3) or (4).
3. ☑ The application is not an application filed under 35 U.S.C. 111(a) on or after December 8, 2004.
4. ☐ The petition for express abandonment under 1.138(d) is dismissed because the applicant did not pay any search fee and excess claims fees in the above-identified application.

Telephone inquiries should be directed to the Office of Data Management at (571) 272-4200.

Patent Publication Branch
Office of Data Management

FORM PET651D (Rev. 08/07)

UNITED STATES PATENT AND TRADEMARK OFFICE

UNITED STATES DEPARTMENT OF COMMERCE
United States Patent and Trademark Office
Address: COMMISSIONER FOR PATENTS
P.O. Box 1450
Alexandria, Virginia 22313-1450
www.uspto.gov

APPLICATION NO.	FILING DATE	FIRST NAMED INVENTOR	ATTORNEY DOCKET NO.	CONFIRMATION NO.
11/915,242	12/27/2007	Jean-Marie Jacquet	099099-0106	4407

22428 7590 02/18/2011
FOLEY AND LARDNER LLP
SUITE 500
3000 K STREET NW
WASHINGTON, DC 20007

EXAMINER
TURNER, ARCHENE A

ART UNIT	PAPER NUMBER
1784	

MAIL DATE	DELIVERY MODE
02/18/2011	PAPER

Please find below and/or attached an Office communication concerning this application or proceeding.

The time period for reply, if any, is set in the attached communication.

UNITED STATES PATENT AND TRADEMARK OFFICE

Commissioner for Patents
United States Patent and Trademark Office
P.O. Box 1450
Alexandria, VA 22313-1450
www.uspto.gov

wk

2/18/2011

In re application of :
Jacquet et al. : DECISION ON
Serial No. 11/915,242 : PETITION
Filed: November 21, 2007 :
For: **COATING COMPRISING LAYERED STRUCTURES OF DIAMOND LIKE NANOCOMPOSITE LAYERS AND DIAMOND LIKE CARBON LAY**

This is a decision on the request filed on November 26, 2010. The request is to resend and reset the response period from the Office Action mailed May 10, 2010. Applicants assert that during a routine check of the status of the application on PAIR on November 17, 2010, Applicants discovered that an Office Action was issued on May 10, 2010. This was the first time that Applicants knew of the Office Action because the Office Action had not been received by the Applicants.

DECISION

The instant request is accepted as a timely petition under 37 C.F.R. 1.181 (no fee), and is evaluated under the procedures regarding an acceptable showing of non-receipt of an office action, TMOG 1156 O.G. 53, November 16, 1993, (see also MPEP 711.03(c) - NEW PROCEDURE TMOG 1170 O.G. 114).

To minimize costs and burdens to practitioners and the Office, the Office has modified the showing required to establish nonreceipt of an Office action. The showing required to establish nonreceipt of an Office communication must include a statement from the practitioner describing the system used for recording an Office action received at the correspondence address of record with the USPTO. The statement should establish that the docketing system is sufficiently reliable. It is expected that the record would include, but not be limited to, the application number, attorney docket number, the mail date of the Office action and the due date for the response.

Practitioner must state that the Office action was not received at the correspondence address of record, and that a search of the practitioner's record(s), including any file jacket or the equivalent, and the application contents, indicates that the Office action was not received. A copy of the record(s) used by the practitioner where the non-received Office action would have been entered had it been received is required.

A copy of the practitioner's record(s) required to show non-receipt of the Office action should include the master docket for the firm. That is, if a three month period for reply was set in the nonreceived Office action, a copy of the master docket report showing all replies docketed for a date three months from the mail date of the nonreceived Office action must be submitted as documentary proof of nonreceipt of the Office action. If no such master docket exists, the practitioner should so state and provide other evidence such as, but not limited to, the following: the application file jacket; incoming mail log; calendar; reminder system; or the individual docket record for the application in question.

The showing outlined above may not be sufficient if there are circumstances that point to a conclusion that the Office action may have been lost after receipt rather than a conclusion that the Office action was lost in the mail (e.g., if the practitioner has a history of not receiving Office actions).

Evidence of nonreceipt of an Office communication or action other than that action to which reply was required to avoid abandonment would not warrant withdrawal of the holding of abandonment. Abandonment takes place by operation of law for failure to reply to an Office action or timely pay the issue fee, not by operation of the mailing of a Notice of Abandonment.

The petitioner has not provided any evidence of nonreceipt of the Office Action.

The Petition is **DENIED.**

/SHARON GIBSON/
Sharon A. Gibson, Director
Technology Center 1700
Chemical and Materials Engineering

FOLEY AND LARDNER LLP
SUITE 500
3000 K STREET NW
WASHINGTON DC 20007

UNITED STATES PATENT AND TRADEMARK OFFICE

UNITED STATES DEPARTMENT OF COMMERCE
United States Patent and Trademark Office
Address: COMMISSIONER FOR PATENTS
P.O. Box 1450
Alexandria, Virginia 22313-1450
www.uspto.gov

APPLICATION NO.	FILING DATE	FIRST NAMED INVENTOR	ATTORNEY DOCKET NO.	CONFIRMATION NO.
11/915,242	12/27/2007	Jean-Marie Jacquet	099099-0106	4407

22428 7590 05/10/2011
FOLEY AND LARDNER LLP
SUITE 500
3000 K STREET NW
WASHINGTON, DC 20007

EXAMINER
TURNER, ARCHENE A

ART UNIT	PAPER NUMBER
1784	

MAIL DATE	DELIVERY MODE
05/10/2011	PAPER

Please find below and/or attached an Office communication concerning this application or proceeding.

The time period for reply, if any, is set in the attached communication.

UNITED STATES PATENT AND TRADEMARK OFFICE

Commissioner for Patents
United States Patent and Trademark Office
P.O. Box 1450
Alexandria, VA 22313-1450
www.uspto.gov

MAY 10 2011

In re application of :
Jacquet et al. : DECISION ON
Serial No. 11/915,242 : PETITION
Filed: November 21, 2007 :
For: **COATING COMPRISING LAYERED STRUCTURES OF DIAMOND LIKE NANOCOMPOSITE LAYERS AND DIAMOND LIKE CARBON LAY**

This is a decision on the request originally filed on November 26, 2010. The request is to resend and reset the response period from the Office Action mailed May 10, 2010. Applicants assert that during a routine check of the status of the application on PAIR on November 17, 2010, Applicants discovered that an Office Action was issued on May 10, 2010. This was the first time that Applicants knew of the Office Action because the Office Action had not been received by the Applicants. The original request was denied because the petitioner did not provide any evidence of nonreceipt of the Office Action. Applicants' second submission of March 18, 2011 does provide the necessary evidence.

DECISION

The instant request is accepted as a timely petition under 37 C.F.R. 1.181 (no fee), and is evaluated under the procedures regarding an acceptable showing of non-receipt of an office action, TMOG 1156 O.G. 53, November 16, 1993, (see also MPEP 711.03(c) - NEW PROCEDURE TMOG 1170 O.G. 114).

The Petition is **GRANTED.**

The Office Action of May 10, 2010 will be remailed and the date for response will be set from the mail date of the new action.

Karen M. Young

Karen M. Young, Director
Technology Center 1700
Chemical and Materials Engineering

FOLEY AND LARDNER LLP
SUITE 500
3000 K STREET NW
WASHINGTON DC 20007

UNITED STATES PATENT AND TRADEMARK OFFICE

UNITED STATES DEPARTMENT OF COMMERCE
United States Patent and Trademark Office
Address: COMMISSIONER FOR PATENTS
P.O. Box 1450
Alexandria, Virginia 22313-1450
www.uspto.gov

APPLICATION NO.	FILING DATE	FIRST NAMED INVENTOR	ATTORNEY DOCKET NO.	CONFIRMATION NO.
11/915,254	11/21/2007	Qian Liu	10195.0023	4547

7590 10/27/2010
Huawei Technologies Co., Ltd./Finnegan
901 New York Avenue
NW
Washington, DC 20001

EXAMINER
YANG, RYAN R

ART UNIT	PAPER NUMBER
2628	

MAIL DATE	DELIVERY MODE
10/27/2010	PAPER

DECISION DISMISSING PETITION UNDER 37 CFR 1.138(d)

The declaration of express abandonment will not be recognized

This is in response to the petition under 37 CFR 1.138(d), requesting for a refund of any previously paid search fee and excess claims fee in the above-identified application.

The petition is dismissed.

The express abandonment will **not** be recognized for the reason(s) indicated below:

1. ☐ The petition was not filed in sufficient time to permit the appropriate officials to recognize the abandonment before an examination has been made of the application. See 37 CFR 1.138(d).
2. ☐ The petition was not signed by a party authorized by 37 CFR 1.33(b)(1), (3) or (4).
3. ☑ The application is not an application filed under 35 U.S.C. 111(a) on or after December 8, 2004.
4. ☐ The petition for express abandonment under 1.138(d) is dismissed because the applicant did not pay any search fee and excess claims fees in the above-identified application.

Telephone inquiries should be directed to the Office of Data Management at (571) 272-4200.

Mimi Farmer

Patent Publication Branch
Office of Data Management

FORM PET651D (Rev. 08/07)

SPE RESPONSE FOR CERTIFICATE OF CORRECTION

DATE : 6/14/2011

TO SPE OF : ART UNIT 1649

SUBJECT : Request for Certificate of Correction for Appl. No.: 11/915324 Patent No.: 7879568 B2

CofC mailroom date: 5/27/2011

Please respond to this request for a certificate of correction within 7 days.

FOR IFW FILES:

Please review the requested changes/corrections as shown in the **COCIN** document(s) in the IFW application image. No new matter should be introduced, nor should the scope or meaning of the claims be changed.

Please complete the response (see below) and forward the completed response to scanning using document code **COCX**.

FOR PAPER FILES:

Please review the requested changes/corrections as shown in the attached certificate of correction. Please complete this form (see below) and forward it with the file to:

Certificates of Correction Branch (CofC)
Randolph Square – 9D10-A
Palm Location 7580

Note: _____

Virginia Tolbert

Certificates of Correction Branch

(571) 272-0460

Thank You For Your Assistance

The request for issuing the above-identified correction(s) is hereby:
Note your decision on the appropriate box.

- [X] **Approved** — **All** changes apply.
- [ ] **Approved in Part** — Specify below which changes **do not** apply.
- [ ] **Denied** — State the reasons for denial below.

Comments: Ok to enter changes on certificate of correction

/Daniel E. Kolker/
Primary Examiner

SPE

1649
Art Unit

12 AUG 2010

UNITED STATES PATENT AND TRADEMARK OFFICE

Commissioner for Patents
United States Patent and Trademark Office
P.O. Box 1450
Alexandria, VA 22313-1450
www.uspto.gov

FAY KAPLUN & MARCIN, LLP
150 BROADWAY, SUITE 702
NEW YORK NY 10038

In re Application of	:	
GÖDEKE, Holger, et al.	:	
Application No.: 11/915,350	:	DECISION ON
PCT No.: PCT/EP2007/009446	:	
Int. Filing Date: 25 October 2007	:	PETITION
Priority Date: 24 May 2007	:	
Attorney Docket No.: 40149/04301(077P 1664)	:	UNDER 37 CFR 1.182
For: TURBO CHARGER II	:	

This decision is in response to applicants' Petition Under 37 CFR 1.182, filed with the United States Patent and Trademark Office on 13 May 2010.

BACKGROUND

On 24 March 2010, applicants submitted, *inter alia*, a declaration of the inventors.

On 16 April 2010, the Office mailed Notification of Defective Response (Form PCT/DO/EO/916) indicating that the last name of the fifth named inventor did not match the name on the published international application.

On 13 May 2010, applicants submitted a petition under 37 CFR 1.182.

DISCUSSION

The fee for a petition under 37 CFR 1.182 will be charged to deposit account no. 50-1492, as authorized. However, applicant has not furnished a statement signed by the inventor setting forth both names and the procedure whereby the change of name was effected, or a copy of the court order. MPEP 605.04(c).

CONCLUSION

Applicant's petition under 37 CFR 1.182 to correct applicant's name is **DISMISSED** without prejudice.

Any request for reconsideration on the merits should be filed within a time period of **TWO (2) MONTHS** from the mail date of this Decision. Extensions of time under 37 CFR 1.136(a) are available. FAILURE TO PROPERLY RESPOND WILL RESULT IN ABANDONMENT. Any request for reconsideration of this decision should include a cover

letter entitled "Renewed Submission Under 37 CFR 1.182."

Any further correspondence with respect to this matter may be filed electronically via EFS-Web selecting the document description "Petition for review and processing by the PCT Legal Office" or by mail addressed to Mail Stop PCT, Commissioner for Patents, Office of PCT Legal Administration, P.O. Box 1450, Alexandria, Virginia 22313-1450, with the contents of the letter marked to the attention of the Office of PCT Legal Administration.

/Erin P. Thomson/

Erin P. Thomson
Attorney Advisor
PCT Legal Administration

Telephone: 571-272-3292

UNITED STATES PATENT AND TRADEMARK OFFICE

Commissioner for Patents
United States Patent and Trademark Office
P.O. Box 1450
Alexandria, VA 22313-1450
www.uspto.gov

MAILED

DEC 14 2010

PCT LEGAL ADMINISTRATION

FAY KAPLUN & MARCIN, LLP
150 BROADWAY, SUITE 702
NEW YORK NY 10038

In re Application of	:	
GÖDEKE, Holger, et al.	:	
Application No.: 11/915,350	:	DECISION ON
PCT No.: PCT/EP2007/009446	:	
Int. Filing Date: 25 October 2007	:	PETITION
Priority Date: 24 May 2007	:	
Attorney Docket No.: 40149/04301(077P 1664)	:	UNDER 37 CFR 1.182
For: TURBO CHARGER II	:	

This decision is in response to applicants' renewed Petition Under 37 CFR 1.182, filed with the United States Patent and Trademark Office on 07 October 2010.

BACKGROUND

On 12 August 2010, the Office mailed Decision On Petition Under 37 CFR 1.182, dismissing applicant's petition without prejudice for failure to furnish either a statement from the inventor regarding the name change or a copy of the court order.

On 07 October 2010, applicants submitted a petition under 37 CFR 1.182.

DISCUSSION

Applicants have now supplied a copy of the court order for the change of inventor Sandra Maier's name to Sandra Stehmer.

CONCLUSION

Applicants' petition under 37 CFR 1.182 to correct the inventor's name is **GRANTED**.

This application is being referred to the National Phase Processing Branch of the Office of Patent Application Processing for further action consistent with this decision.

/Erin P. Thomson/

Erin P. Thomson
Attorney Advisor
PCT Legal Administration

Telephone: 571-272-3292

2 AUG 2010

UNITED STATES PATENT AND TRADEMARK OFFICE

Commissioner for Patents
United States Patent and Trademark Office
P.O. Box 1450
Alexandria, VA 22313-1450
www.uspto.gov

FAY KAPLUN & MARCIN, LLP
150 BROADWAY, SUITE 702
NEW YORK NY 10038

In re Application of	:	
GODEKE et al.	:	
Application No.: 11/915,353	:	DECISION ON
PCT No.: PCT/EP07/09445	:	
Int. Filing Date: 25 October 2007	:	PETITION UNDER
Priority Date: 24 May 2007	:	
Attorney Docket No.:	:	37 CFR 1.182
For: MOTOR	:	

This is a decision applicant's "Response to Notification of Defective Response", treated as a petition under 37 CFR 1.182 to correct inventor's name, filed on 13 May 2010 in the United States Patent and Trademark Office (USPTO).

BACKGROUND

On 23 November 2007, applicant filed a request for U.S. National Stage entry for international application PCT/EP07/09445. On 25 February 2008, applicant filed an executed declaration.

On 04 January 2010, a Notification of Missing Requirements was mailed to applicant indicating, *inter alia*, that the declaration did not comply with 37 CFR 1.497(a) and (b) in that it identifies priority information not being claimed and not listed on International Application.

On 24 March 2010, applicant filed a newly executed declaration. The declaration identified and was executed by SANDRA STEHMER.

On 16 April 2010, a Notification of Defective Response was mailed requesting clarification regarding inventor Sandra Maier as identified on the international application and Sandra Stehmer as identified on the declaration.

DISCUSSION

A review of international application PCT/EP07/09445 revealed that SANDRA MAIER was the sixth named inventor in the published international application and that the declaration submitted in the above referenced application identified SANDRA STEHMER, making the declaration unacceptable.

To correct the inventor's name, a petition under 37 CFR 1.182 is required. The petition must include an appropriate petition fee and a statement signed by the inventor setting forth both names and the procedure whereby the change of name was effected, or a copy of the court order. See MPEP §605.04(c).

The petition fee of $400 is charged to applicant's deposit account per his authorization. However, applicant merely provided the attorney's statement that the change in the inventor's name was due to her marriage subsequent to the filing of the international application. A statement signed by the inventor setting forth both names and the procedure whereby the change of name was effected, or a copy of the court order is required.

CONCLUSION

For the above reasons, the petition under 37 CFR 1.182 to change the respective inventor's name to SANDRA STEHMER is **DISMISSED WITHOUT PREJUDICE**.

The declaration submitted on 24 March 2010 is unacceptable as filed at this time. What is required is a statement signed by the inventor setting forth both names and the procedure whereby the change of name was effected, or a copy of the court order is required.

Applicant is required to correct the above-noted defect within ONE (1) MONTH from the mail date of this decision or the time remaining in the Notification of Missing Requirements.

Any further correspondence with respect to this matter may be filed electronically via EFS-Web selecting the document description "Petition for review and processing by the PCT Legal Office" or by mail addressed to Mail Stop PCT, Commissioner for Patents, Office of PCT Legal Administration, P.O. Box 1450, Alexandria, Virginia 22313-1450, with the contents of the letter marked to the attention of the Office of PCT Legal Administration.

/Cynthia M. Kratz/
Cynthia M. Kratz
Attorney Advisor
PCT Legal Office
Office of PCT Legal Administration

Telephone: (571)272-3286
Facsimile: (571)273-0459

UNITED STATES PATENT AND TRADEMARK OFFICE

Commissioner for Patents
United States Patent and Trademark Office
P.O. Box 1450
Alexandria, VA 22313-1450
www.uspto.gov

MAILED

DEC 14 2010

PCT LEGAL ADMINISTRATION

FAY KAPLUN & MARCIN, LLP
150 BROADWAY, SUITE 702
NEW YORK NY 10038

In re Application of GODEKE et al. Application No.: 11/915,353 PCT No.: PCT/EP07/09445 Int. Filing Date: 25 October 2007 Priority Date: 24 May 2007 Attorney Docket No.: 40149/04201 For: ELECTRIC MOTOR II	:	DECISION ON PETITION UNDER 37 CFR 1.182

This is a decision applicant's "Renewed Petition under 37 CFR 1.182" to correct inventor's name, filed on 12 October 2010 in the United States Patent and Trademark Office (USPTO).

BACKGROUND

The procedural history of this application was set forth in the decision mailed on 02 August 2010 and is incorporated herein by reference.

DISCUSSION

To correct the inventor's name, a petition under 37 CFR 1.182 is required. The petition must include an appropriate petition fee and a statement signed by the inventor setting forth both names and the procedure whereby the change of name was effected, or a copy of the court order. See MPEP §605.04(c).

Applicant has provided the petition fee of $400 and a copy of the court order whereby the change of name is effected. The change in the inventor's name was due to her marriage subsequent to the filing of the international application.

CONCLUSION

For the above reasons, the petition under 37 CFR 1.182 to change the respective inventor's name to SANDRA STEHMER is **GRANTED**.

The declaration submitted on 24 March 2010 is acceptable. The 35 U.S.C. 371(c)(1), (c)(2) and (c)(4) date is 24 March 2010.

/Cynthia M. Kratz/
Cynthia M. Kratz
Attorney Advisor
PCT Legal Office
Office of PCT Legal Administration
Telephone: (571)272-3286
Facsimile: (571)273-0459

UNITED STATES PATENT AND TRADEMARK OFFICE

Commissioner for Patents
United States Patent and Trademark Office
P.O. Box 1450
Alexandria, VA 22313-1450
www.uspto.gov

MAILED

AUG 09 2011

OFFICE OF PETITIONS

SUGHRUE-265550
2100 PENNSYLVANIA AVE., NW
WASHINGTON DC 20037-3213

In re Application of	:	
Katsumi Kushiya	:	
Application No. 11/915,423	:	DECISION GRANTING PETITION
Filed: November 26, 2007	:	UNDER 37 CFR 1.313(c)(2)
Attorney Docket No. Q105239	:	

This is a decision on the petition under 37 CFR 1.313(c)(2), filed August 5, 2011, to withdraw the above-identified application from issue after payment of the issue fee.

The petition is **GRANTED**.

The above-identified application is withdrawn from issue for consideration of a submission under 37 CFR 1.114 (request for continued examination). *See* 37 CFR 1.313(c)(2).

Petitioner is advised that the issue fee paid on July 8, 2011 cannot be refunded. If, however, this application is again allowed, petitioner may request that it be applied towards the issue fee required by the new Notice of Allowance.[1]

Telephone inquiries should be directed to the undersigned at (571) 272-3208.

This application is being referred to Technology Center AU 2813 for processing of the request for continued examination under 37 CFR 1.114 and for consideration of the concurrently filed IDS.

/Karen Creasy/
Karen Creasy
Petitions Examiner
Office of Petitions

[1] *The request to apply the issue fee to the new Notice may be satisfied by completing and returning the new Part B – Fee(s) Transmittal Form (along with any balance due at the time of submission). Petitioner is advised that the Issue Fee Transmittal Form must be completed and timely submitted to avoid abandonment of the application.*

UNITED STATES PATENT AND TRADEMARK OFFICE

Commissioner for Patents
United States Patent and Trademark Office
P.O. Box 1450
Alexandria, VA 22313-1450
www.uspto.gov

NXP, B.V.
NXP INTELLECTUAL PROPERTY & LICENSING
M/S41-SJ
1109 MCKAY DRIVE
SAN JOSE, CA 95131

MAILED

OCT 06 2010

OFFICE OF PETITIONS

In re Application of :
Susanne Windischberger et al :
Application No. 11/915,543 : ON PETITION
Filed: November 26, 2007 :
Attorney Docket No. 00 0981 US1

This is a decision on the petition, filed October 5, 2010 under 37 CFR 1.313(c)(2) to withdraw the above-identified application from issue after payment of the issue fee.

The petition is **GRANTED**.

The above-identified application is withdrawn from issue for consideration of a submission under 37 CFR 1.114 (request for continued examination). See 37 CFR 1.313(c)(2).

Petitioner is advised that the issue fee paid on September 23, 2010 in the above-identified application cannot be refunded. If, however, the above-identified application is again allowed, petitioner may request that it be applied towards the issue fee required by the new Notice of Allowance.[1]

Telephone inquiries should be directed to Irvin Dingle at (571) 272-3210.

This matter is being referred to Technology Center AU 2832 for processing of the request for continued examination under 37 CFR 1.114 and for consideration of the concurrently filed Information Disclosure Statement.

/Irvin Dingle/
Irvin Dingle
Petitions Examiner
Office of Petitions

---

[1] The request to apply the issue fee to the new Notice may be satisfied by completing and returning the new Issue Fee Transmittal Form PTOL-85(b), which includes the following language thereon: Commissioner for Patents is requested to apply the Issue Fee and Publication Fee (if any) or re-apply any previously paid issue fee to the application identified above. Petitioner is advised that, whether a fee is indicated as being due or not, the Issue Fee Transmittal Form **must** be completed and timely submitted to avoid abandonment. Note the language in bold text on the first page of the Notice of Allowance and Fee(s) Due (PTOL-85).

UNITED STATES PATENT AND TRADEMARK OFFICE

Commissioner for Patents
United States Patent and Trademark Office
P.O. Box 1450
Alexandria, VA 22313-1450
www.uspto.gov

PATENT LAW OFFICE OF D.R. HASZKO
C/O DENNIS R. HASZKO
499 MOSHER HILL ROAD
FARMINGTON, ME 04938

MAILED

NOV 24 2010

OFFICE OF PETITIONS

In re Application	:	
Gerald G. Abraham	:	DECISION ON PETITION
Application No. 11/915,583	:	TO WITHDRAW
Filed: November 26, 2007	:	FROM RECORD
Attorney Docket No. 50912.1.P01US01	:	

This is a decision on the Request to Withdraw as attorney or agent of record under 37 C.F.R. § 1.36(b), filed October 18, 2010.

The request is **DISMISSED**.

A review of the file record indicates that the Patent Law Office of Dr. Haszko was never appointed power of attorney in this patent application and therefore, was only designated as the correspondence address of record. As a result, the request to withdraw under 37 C.F.R. § 1.36(b) is not applicable.

All future communications from the Office will continue to be directed to the above-listed address until otherwise notified by applicant.

There is an outstanding Office action mailed May 25, 2010, that requires a reply from the applicant.

Telephone inquires concerning this decision should be directed to the undersigned at (571) 272-6059. All other inquires concerning either the examination or status of the application should be directed to the Technology Center.

A. Kelley

Alicia Kelley
Petitions Examiner
Office of Petitions

Doc Code: PET.AUTO **Document Description: Petition automatically granted by EFS-Web**	PTO/SB/83 U.S. Patent and Trademark Office Department of Commerce

Electronic Petition Request	**REQUEST FOR WITHDRAWAL AS ATTORNEY OR AGENT AND CHANGE OF CORRESPONDENCE ADDRESS**
Application Number	11915593
Filing Date	27-Nov-2007
First Named Inventor	Bandi Parthasaradhi Reddy
Art Unit	1622
Examiner Name	MARK BERCH
Attorney Docket Number	H1089/20060
Title	SOLID FAROPENEM FREE ACID

◉ Please withdraw me as attorney or agent for the above identified patent application and the practitioners of record associated with Customer Number: 3000

The reason(s) for this request are those described in 37 CFR:

10.40(c)(5)

Certifications

☒ I/We have given reasonable notice to the client, prior to the expiration of the response period, that the practitioner(s) intend to withdraw from employment

☒ I/We have delivered to the client or a duly authorized representative of the client all papers and property (including funds) to which the client is entitled

☒ I/We have notified the client of any responses that may be due and the time frame within which the client must respond

Change the correspondence address and direct all future correspondence to the first named inventor or assignee that has properly made itself of record pursuant to 37 CFR 3.71:

Name	Hongmei Maggie Sheridan, J.D., M.S. Hetero USA Inc
Address	1035 Centennial Ave
City	Piscataway
State	NJ
Postal Code	08854
Country	US

I am authorized to sign on behalf of myself and all withdrawing practitioners.	
Signature	/Joseph F Murphy/
Name	Joseph F Murphy
Registration Number	58313

UNITED STATES PATENT AND TRADEMARK OFFICE

Commissioner for Patents
United States Patent and Trademark Office
P.O. Box 1450
Alexandria, VA 22313-1450
www.uspto.gov

Decision Date : October 10,2011

In re Application of :

Bandi Parthasaradhi Reddy

Application No : 11915593

Filed : 27-Nov-2007

Attorney Docket No : H1089/20060

DECISION ON REQUEST TO WITHDRAW AS ATTORNEY/AGENTOF RECORD

This is an electronic decision on the Request to Withdraw as attorney or agent of record under 37 CFR § 1.36(b), filed October 10,2011

The request is **APPROVED.**

The request was signed by Joseph F Murphy (registration no. 58313) on behalf of all attorneys/agents associated with Customer Number 3000 . All attorneys/agents associated with Cusotmer Number 3000 have been withdrawn.

Since there are no remaining attorneys of record, all future communications from the Office will be directed to the first named inventor or assignee that has properly made itself of record pursuant to 37 CFR 3.71, with correspondence address:

Name	Hongmei Maggie Sheridan, J.D., M.S.
Name2	Hetero USA Inc
Address 1	1035 Centennial Ave
Address 2	
City	Piscataway
State	NJ
Postal Code	08854
Country	US

As a reminder, requester is required to inform the first named inventor or assignee that has properly made itself of record pursuant to 37 CFR 3.71 of the electronically processed petition.

Telephone inquiries concerning this decision should be directed to the Patent Electronic Business Center (EBC) at 866-217-9197.

Office of Petitions

UNITED STATES PATENT AND TRADEMARK OFFICE

UNITED STATES DEPARTMENT OF COMMERCE
United States Patent and Trademark Office
Address: COMMISSIONER FOR PATENTS
P.O. Box 1450
Alexandria, Virginia 22313-1450
www.uspto.gov

APPLICATION NO.	FILING DATE	FIRST NAMED INVENTOR	ATTORNEY DOCKET NO.	CONFIRMATION NO.
11/915,603	07/02/2008	Christopher Mark Mann	LSN-2491-87	7300

7590 03/07/2011
NIXON & VANDERHYE, PC
901 NORTH GLEBE ROAD, 11TH FLOOR
ARLINGTON, VA 22203

EXAMINER

ART UNIT	PAPER NUMBER
1761	

MAIL DATE	DELIVERY MODE
03/07/2011	PAPER

DECISION DISMISSING PETITION UNDER 37 CFR 1.138(d)

The declaration of express abandonment will not be recognized

This is in response to the petition under 37 CFR 1.138(d), requesting for a refund of any previously paid search fee and excess claims fee in the above-identified application.

The petition is dismissed.

The express abandonment will **not** be recognized for the reason(s) indicated below:

1. ☐ The petition was not filed in sufficient time to permit the appropriate officials to recognize the abandonment before an examination has been made of the application. See 37 CFR 1.138(d).
2. ☐ The petition was not signed by a party authorized by 37 CFR 1.33(b)(1), (3) or (4).
3. ☑ The application is not an application filed under 35 U.S.C. 111(a) on or after December 8, 2004.
4. ☐ The petition for express abandonment under 1.138(d) is dismissed because the applicant did not pay any search fee and excess claims fees in the above-identified application.

Telephone inquiries should be directed to the Office of Data Management at (571) 272-4200.

Nioni Farmer

Patent Publication Branch
Office of Data Management

FORM PET651D (Rev. 08/07)

UNITED STATES PATENT AND TRADEMARK OFFICE

Commissioner for Patents
United States Patent and Trademark Office
P.O. Box 1450
Alexandria, VA 22313-1450
www.uspto.gov

WARREN A. SKLAR (SOER)
RENNER, OTTO, BOISSELLE & SKLAR, LLP
1621 EUCLID AVENUE
19TH FLOOR
CLEVELAND OH 44115

MAILED
JAN 03 2012
OFFICE OF PETITIONS

In re Application of	:	
Maria Rang, et al.	:	
Application No. 11/915,624	:	DECISION GRANTING PETITION
Filed: May 22, 2008	:	UNDER 37 CFR 1.313(c)(2)
Attorney Docket No. PS04 0445US1	:	

This is a decision on the petition under 37 CFR 1.313(c)(2), filed, December 30, 2011 to withdraw the above-identified application from issue after payment of the issue fee.

The petition is **GRANTED**.

The above-identified application is withdrawn from issue for consideration of a submission under 37 CFR 1.114 (request for continued examination). *See* 37 CFR 1.313(c)(2).

Petitioner is advised that the issue fee paid on December 7, 2011 cannot be refunded. If, however, this application is again allowed, petitioner may request that it be applied towards the issue fee required by the new Notice of Allowance.[1]

Telephone inquiries should be directed to Terri Johnson at (571) 272-2991.

This application is being referred to Technology Center AU 2617 for processing of the request for continued examination under 37 CFR 1.114 and for consideration of the concurrently filed information disclosure statement.

/Terri Johnson/
Terri Johnson
Petitions Examiner
Office of Petitions

---

[1] *The request to apply the issue fee to the new Notice may be satisfied by completing and returning the new Part B – Fee(s) Transmittal Form (along with any balance due at the time of submission). Petitioner is advised that the Issue Fee Transmittal Form must be completed and timely submitted to avoid abandonment of the application.*

United States Patent and Trademark Office

Commissioner for Patents
United States Patent and Trademark Office
P.O. Box 1450
Alexandria, VA 22313-1450
www.uspto.gov

MAR 0 8 2012

Stuart Macphail, Ph.D, J.D.
FISH & RICHARDSON P.C. (NY)
P.O. BOX 1022
MINNEAPOLIS MN 55440-1022

In re Application of	:
Polyak et al	:Decision on Petition
Serial No.: 11/915,645	:
Filed : 13 June 2008	:
Attorney Docket No.: 00530-0127US1/DFC1 1009.04	

This letter is in response to the Petition under 37 C.F.R. 1.144 and 1.181 filed on 13 January 2012 requesting reconsideration of the restriction requirement and the finality of the Office action mailed 14 October 2011.

BACKGROUND

This application was filed as a national stage application in compliance with 35 U.S.C. 371 and as such is entitled to re-consideration under PCT Unity of Invention rules.

On 1 November 2010, the examiner set forth a restriction requirement which divided the claims into 19 groups and required further election of species.

On 24 January 2011, applicants elected Group 6, claims 40, 45, 52, 57, 58 and 63 and the species of breast test fibroblasts, with traverse.

On 16 March 2011, in an interview between the examiner and Mr. Macphail, claims 58 and 63 were discussed.

On 18 April 2011, the examiner prepared a first Office action on the merits in which the traversal was considered and the restriction made final. The examiner indicated that applicants had elected the gene CXorf12 in the interview. Claims 1-40, 45-46, 51-52, 57, 64, 67-68, 75-76, 79-80, 83, 85, 87, 90-92, 97-101, 104-105 and 108 were withdrawn as non-elected subject matter. Claims 58 and 63 were examined and rejected under 35 U.S.C. 112, first and second paragraphs.

A final rejection on claims 58, 63, 109-110 and 113-118 was mailed on 14 October 2011. In that Office action, claims 1, 8-9, 13-23, 25-40, 45-46, 51-52, 57, 64, 67-68, 75-76, 79-80, 83, 85, 87, 90-92, 97-101, 104 and 105 and new claims 111-112 were withdrawn from examination. The examiner reasoned that claims 111-112 were withdrawn because they recited non-elected subject matter where gene expression was increased and the degree of methylation was decreased. An interview summary which accompanied the Office action indicated that on October 3-5, 2011, allowable subject matter was identified in Claims 63, however, applicants did not want to be limited to the elected species. The interview summary indicated that the genes listed in Tables 7 and 8 did not have unity of invention according to MPEP 1850(b).

On 13 January 2012, applicants filed a response to the Office action along with this petition.

DISCUSSION

The file history and petition have been considered carefully.

Claim 58 is drawn to a method of determining whether a human test breast tissue is likely to be cancerous, by requiring the steps of determining the degree of methylation of one or more C residues in a gene, wherein the gene is selected by tags listed in Tables 7 and 8 and the one or more C residues is in a CpG sequence. The examiner focused examination to the methylation pattern of the elected species, the CXorf12. No prior art has been applied to the elected claims. The other examined claims either depend from the generic claim 58 or to claim 63, which is now limited to the elected Cxorf12 gene.

The petition argues that because no prior art rejection has been made on the elected species or the generic claim, unity of invention exists. The petition also argues that in view of the 2011 Federal Register Notice, the species would have unity of invention when the "members of the Markush Group share a common use when they are disclosed in the specification or known in the art to be functionally equivalent." The petition also points to MPEP 803.02 for reciting that when a Markush group occurs in a claim reciting a process or a combination (not a single compound), it is sufficient if the members of the group are disclosed in the specification to possess at least one property in common which is mainly responsible for their function in the claimed relationship, and it is clear from their very nature or the prior art that all of them possess this property. Lastly, the petition points to both MPEP 803.02 and the Federal Register Notice to indicate that because there is no prior art found on the elected sequence, the search and examination should have been extended to non-elected sequences. This was not done.

Taken together, in view of the arguments presented and the facts of the instant application, the petition is persuasive.

This type of limited examination is inconsistent with the 9 February 2011 Federal Register Notice entitled "Supplemental Examination Guidelines for Determining Compliance with 35 U.S.C. 112 and for treatment of Related Issues in Patent Applications." This Notice applies to both national applications filed under 35 U.S.C. 111(a) and national stage applications filed in compliance with 35 U.S.C. 371. Page 7166 sets forth the following guidance for the treatment of Markush-type claims:

"Under principles of compact prosecution, the examiner should also require the applicant to elect a species or group of indistinct species for search and examination (i.e., an election of species). If the examiner does not find the species or group of indistinct species in the prior art, then the examiner should extend the search to those additional species that fall within the scope of a permissible Markush claim. In other words, the examiner should extend the search to the species that share a single structural similarity and a common use. The improper Markush claim should be examined for patentability over the prior art with respect to the elected species or group of indistinct species, as well as the species that share a single structural similarity and a common use with the elected species or group of indistinct species (i.e., the species that would fall within the scope of a proper Markush claim)."

For these reasons, the Office action mailed 14 October 2011 is incomplete and the finality premature.

DECISION

The petition filed on 13 January 2012 under 37 CFR 1.144 and 1.181 is **GRANTED** follows.

The finality of the 14 October 2011 Office action is withdrawn as premature.

The application will be forwarded to the examiner to consider the papers filed 13 January 2012, and to prepare an Office action consistent with this petition decision. Markush claims will be examined according to MPEP 803.02 and the 2011 Federal register Notice.

Should there be any questions regarding this decision, please contact Quality Assurance Specialist Julie Burke by mail addressed to Director, Technology Center 1600, PO BOX 1450, ALEXANDRIA, VA 22313-1450, or by telephone at (571) 272-0512 or by Official Fax at 703-272-8300.

Wanda Walker
Director, Technology Center 1600

2 1 SEP 2010

UNITED STATES PATENT AND TRADEMARK OFFICE

Commissioner for Patents
United States Patent and Trademark Office
P.O. Box 1450
Alexandria, VA 22313-1450
www.uspto.gov

Timothy H. Van Dyke
390 No. Orange Avenue
Suite 2500
Orlando FL 32801

In re Application of	:	
Daniell	:	DECISION ON PETITIONS
Application No. 11/915,666	:	
Filed: 30 May 2006	:	UNDER 37 CFR 1.78(a)(3) AND
Attorney Docket No. 10669-012US	:	
For: Chloroplasts Engineering To	:	UNDER 37 CFR 1.78(a)(6)
Express Pharmaceutical Proteins	:	

This is a decision on the petition under 37 CFR §§ 1.78(a)(3) and 1.78(a)(6), filed 19 July 2010, to accept an unintentionally delayed claim under 35 U.S.C. §§ 120 and 119(e) for the benefit of the prior-filed nonprovisional and provisional applications set forth in the concurrently filed amendment.

The petition is **DISMISSED**.

The present nonprovisional application was filed after November 29, 2000, and the claim herein for the benefit of priority to the prior-filed nonprovisional applications is submitted after expiration of the period specified in 37 CFR 1.78(a)(2)(ii) and 1.78(a)(5)(ii). Therefore, this is a proper petition under 37 CFR 1.78(a)(3) and 1.78(a)(6).

A petition for acceptance of a claim for late priority under 37 CFR §§ 1.78(a)(3) and 1.78(a)(6) is only applicable to those applications filed on or after November 29, 2000. Further, the petition is appropriate only after the expiration of the period specified in 37 CFR §§ 1.78(a)(2)(ii) and 1.78(a)(5)(ii). In addition, the petition under 37 CFR §§ 1.78(a)(3) and 1.78(a)(6) must be accompanied by:

(1) the reference required by 35 U.S.C. §§ 120 and 119(e) and 37 CFR §§ 1.78(a)(2)(i) and 1.78(a)(5)(i) of the prior-filed application, unless previously submitted;

(2) the surcharge set forth in § 1.17(t); and

(3) a statement that the entire delay between the date the claim was due under 37 CFR §§ 1.78(a)(2)(ii) and 1.78(a)(5)(ii) and the date the claim was filed was unintentional. The Commissioner may require additional where there is a question whether the delay was unintentional.

The petition fails to comply with item (1) above.

37 CFR 1.78(a)(2)(i) requires that any nonprovisional application claiming the benefit of one or more prior-filed copending nonprovisional applications must contain or be amended to contain a reference to each such prior-filed application, identifying it by application number (consisting of the series code and serial number) and indicating the relationship of the applications. The relationship between the applications is whether the subject application is a continuation, divisional, or continuation-in-part of a prior-filed nonprovisional application. An example of a proper benefit claim is: "This application is a continuation of Application No. 10/---, filed---." A benefit claim that merely states: "This application claims the benefit of Application No. 10/---, filed---," does not comply with 37 CFR 1.72(a)(2)(i) since the proper relationship, which includes the type of continuing application, is not stated. Also, the status of each nonprovisional parent application (if it is patented or abandoned) should also be indicated, following the filing date of the parent nonprovisional application. See MPEP Section 201.11, Rev. 2, May 2004, Reference to Prior Application. The amendment filed on 19 July 2010 fails to comply with the provisions of 37 CFR 1.78(a)(2)(i) and is therefore unacceptable.

Accordingly, before the petition under 37 CFR §§ 1.78(a)(3) and 1.78(a)(6) can be granted, a renewed petition under 37 CFR §§ 1.78(a)(3) and 1.78(a)(6) and a substitute amendment[1] which sets forth the relationship of the prior-filed application(s) is required.

Any further correspondence with respect to this matter may be filed electronically via EFS-Web selecting the document description "Petition for review and processing by the PCT Legal Office" or by mail addressed to Mail Stop PCT, Commissioner for Patents, Office of PCT Legal Administration, P.O. Box 1450, Alexandria, Virginia 22313-1450, with the contents of the letter marked to the attention of the Office of PCT Legal Administration.

/George Dombroske/
George Dombroske
PCT Legal Examiner
Office of PCT Legal Administration

/Bryan Lin/
Bryan Lin
PCT Legal Examiner
Office of PCT Legal Administration

[1] *Note* 37 CFR 1.121

UNITED STATES PATENT AND TRADEMARK OFFICE

Commissioner for Patents
United States Patent and Trademark Office
P.O. Box 1450
Alexandria, VA 22313-1450
www.uspto.gov

MAILED

DEC 03 2010

PCT LEGAL ADMINISTRATION

Timothy H. Van Dyke
390 No. Orange Avenue
Suite 2500
Orlando FL 32801

In re Application of Daniell Application No. 11/915,666 Filed: 30 May 2006 Attorney Docket No. 10669-012US For: Chloroplasts Engineering To Express Pharmaceutical Proteins	:	DECISION ON PETITIONS UNDER 37 CFR 1.78(a)(3) AND UNDER 37 CFR 1.78(a)(6)

This is a decision on the petitions under 37 CFR §§ 1.78(a)(3) and 1.78(a)(6), filed on September 28, 2010, to accept an unintentionally delayed claim under 35 U.S.C. §§120, 365(c) and 119(e) for the benefit of the prior-filed applications set forth in the concurrently filed amendment.

The petitions are **GRANTED**.

The present nonprovisional application was filed after November 29, 2000, and the claim herein for the benefit of priority to the prior-filed nonprovisional applications is submitted after expiration of the period specified in 37 CFR 1.78(a)(2)(ii) and 1.78(a)(5)(ii). Therefore, this is a proper petition under 37 CFR 1.78(a)(3) and 1.78(a)(6).

A petition for acceptance of a claim for late priority under 37 CFR §§ 1.78(a)(3) and 1.78(a)(6) is only applicable to those applications filed on or after November 29, 2000. Further, the petition is appropriate only after the expiration of the period specified in 37 CFR §§ 1.78(a)(2)(ii) and 1.78(a)(5)(ii). In addition, the petition under 37 CFR §§ 1.78(a)(3) and 1.78(a)(6) must be accompanied by:

(1) the reference required by 35 U.S.C. §§ 120 and 119(e) and 37 CFR §§ 1.78(a)(2)(i) and 1.78(a)(5)(i) of the prior-filed application, unless previously submitted;
(2) the surcharge set forth in § 1.17(t); and
(3) a statement that the entire delay between the date the claim was due under 37 CFR §§ 1.78(a)(2)(ii) and 1.78(a)(5)(ii) and the date the claim was filed was unintentional. The Commissioner may require additional where there is a question whether the delay was unintentional.

The petition complies with the requirements for a grantable petition under 37 CFR §§1.78(a)(3)

and 1.78(a)(6) in that (1) a reference to the prior-filed applications has been included in an amendment to the first sentence of the specification following the title, as provided by 37 CFR §§ 1.78(a)(2)(iii) and 1.78(a)(5)(iii); (2) the surcharge required by 37 CFR 1.17(t) has been submitted; and (3) an acceptable statement of unintentional delay. The statement of unintentional delay differs slightly from the prescribed language. The statement is being construed as a statement that "the entire delay between the date the claims were due under 37 CFR 1.78(a)(2)(ii) and 37 CFR 1.78(a)(5)(ii) and the date the claims were filed was unintentional." Petitioner is required to promptly notify this Office if said interpretation is incorrect. Accordingly, having found that the petition for acceptance of an unintentionally delayed claim for the benefit of priority under 35 U.S.C. §§ 120 and 119(e) to the prior-filed applications satisfies the conditions of 37 CFR §§ 1.78(a)(3) and 1.78(a)(6), the petition is granted.

The granting of the petition to accept the delayed benefit claim to the prior-filed applications under 37 CFR §§ 1.78(a)(3) and 1.78(a)(6) should <u>not</u> be construed as meaning that this application is entitled to the benefit of the filing date of the prior-filed applications. In order for this application to be entitled to the benefit of the prior-filed applications, all other requirements under 35 U.S.C. §§120 and 365(c) and 1.78(a)(1) and (a)(2) and under 35 U.S.C. §119(e) and 37 CFR 1.78(a)(4) and (a)(5) must be met. Similarly, the fact that the corrected Filing Receipt accompanying this decision on petition includes the prior-filed applications should <u>not</u> be construed as meaning that applicant is entitled to the claim for benefit of priority to the prior-filed applications noted thereon. Accordingly, the examiner will, in due course, consider this benefit claim and determine whether this application is entitled to the benefit of the earlier filing date.

A corrected Filing Receipt, which includes the priority claim to the prior-filed applications, accompanies this decision on petition.

Any questions concerning this matter may be directed to the undersigned. All other inquiries concerning either the examination procedures or status of the application should be directed to the Technology Center.

This matter is being referred to Technology Center Art Unit 1648 for appropriate action on the amendment submitted September 28, 2010, including consideration by the examiner of the claim for benefit of the prior-filed applications.

/George Dombroske/
George Dombroske
PCT Legal Examiner
Office of PCT Legal Administration

/Bryan Lin/
Bryan Lin
PCT Legal Examiner
Office of PCT Legal Administration

UNITED STATES PATENT AND TRADEMARK OFFICE

Commissioner for Patents
United States Patent and Trademark Office
P.O. Box 1450
Alexandria, VA 22313-1450
www.uspto.gov

Vedder Price, PC
875 15th Street, NW
Suite 725
Washington DC 20005

MAILED

OCT 12 2010

OFFICE OF PETITIONS

In re Application of John G. Coles, et al. Application No. 11/915,687 Filed: November 27, 2007 Attorney Docket No. 42145.01.0001	DECISION GRANTING PETITION UNDER 37 CFR 1.313(c)(2)

This is a decision on the petition under 37 CFR 1.313(c)(2), filed, October 7, 2010 to withdraw the above-identified application from issue after payment of the issue fee.

The petition is **GRANTED**.

The above-identified application is withdrawn from issue for consideration of a submission under 37 CFR 1.114 (request for continued examination). *See* 37 CFR 1.313(c)(2).

Petitioner is advised that the issue fee paid on September 27, 2010 cannot be refunded. If, however, this application is again allowed, petitioner may request that it be applied towards the issue fee required by the new Notice of Allowance.[1]

Telephone inquiries should be directed to Terri Johnson at (571) 272-2991.

This application is being referred to Technology Center AU 1657 for processing of the request for continued examination under 37 CFR 1.114 and for consideration of the concurrently filed amendment.

/Terri Johnson/
Terri Johnson
Petitions Examiner
Office of Petitions

---

[1] *The request to apply the issue fee to the new Notice may be satisfied by completing and returning the new Part B – Fee(s) Transmittal Form (along with any balance due at the time of submission). Petitioner is advised that the Issue Fee Transmittal Form must be completed and timely submitted to avoid abandonment of the application.*

UNITED STATES PATENT AND TRADEMARK OFFICE

Commissioner for Patents
United States Patent and Trademark Office
P.O. Box 1450
Alexandria, VA 22313-1450
www.uspto.gov

Decision Date February 21, 2012

In re Application of Arnaud Struillou

Application No. 11915723

Filed: 27-Nov-2007

Attorney Docket No. 81455-6490

DECISION ON PETITION

UNDER CFR 1.137(b)

This is an electronic decision on the petition under 37 CFR 1.137(b), February 21, 2012 , to revive the above-identified application.

The petition is **GRANTED**.

The above-identified application became abandoned for failure to reply in a timely manner to the outstanding Office communication. The date of abandonment is the day after the last day of the period set for reply in the Office action plus any applicable extensions of time properly requested.

The electronic petition satisfies the conditions for revival pursuant to the provisions of 37 CFR 1.137(b) in that (1) the reply in the form of aresponse; (2) the petition fee as set forth in 37 CFR 1.17 (m); and (3) the required statement of unintentional delay have been received. Accordingly, the response is accepted as having been unintentionally delayed.

Telephone inquiries concerning this decision should be directed to the Patent Electronic Business Center (EBC) at 866-217-9197.

This application file is being directed to the Technology Center.

Office of Petitions

Doc Code: PET.AUTO Document Description: Petition automatically granted by EFS-Web	PTO/SB/64 U.S. Patent and Trademark Office Department of Commerce

Electronic Petition Request	**PETITION FOR REVIVAL OF AN APPLICATION FOR PATENT ABANDONED UNINTENTIONALLY UNDER 37 CFR 1.137(b)**
Application Number	11915723
Filing Date	27-Nov-2007
First Named Inventor	Arnaud Struillou
Attorney Docket Number	81455-6490
Title	Near Anhydrous Consumer Products Comprising Fragranced Aminoplast Capsules

The above-identified application became abandoned for failure to file a timely and proper reply to a notice or action by the United States Patent and Trademark Office. The date of abandonment is the day after the expiration date of the period set for reply in the office notice or action plus any extensions of time actually obtained.

APPLICANT HEREBY PETITIONS FOR REVIVAL OF THIS APPLICATION

NOTE: A grantable petition requires the following items:
(1) Petition fee;
(2) Reply and/or issue fee;
(3) Terminal disclaimer with disclaimer fee - required for all utility and plant applications filed before June 8, 1995; and for all design applications; and
(4) Statement that the entire delay was unintentional

Petition Fee

- ○ Applicant claims SMALL ENTITY status. See 37 CFR 1.27.
- ○ Applicant is no longer claiming SMALL ENTITY status. See 37 CFR 1.27(g)(2).
- ○ Applicant(s) status remains as SMALL ENTITY.
- ◉ Applicant(s) status remains as other than SMALL ENTITY.

2. Reply and/or fee

- ○ I certify, in accordance with 37 CFR 1.4(d)(4) that the amendment and response have already been filed in the above-identified application on
- ◉ Amendment and response are attached

RCE request,submission, and fee.

- ○ I certify, in accordance with 37 CFR 1.4(d)(4) that the RCE Request, Submission, and Fee have already been filed in the above-identified application on
- ○ RCE Request, Submission, and Fee are attached

Notice of Appeal

○ I certify, in accordance with 37 CFR 1.4(d)(4) that the Notice of Appeal and Fee have already been filed in the above-identified application on

○ Notice of Appeal and Fee are attached

3. Terminal Disclaimer is not required, since the Electronic Petition format is not support for Design applications and applications filed before June 8, 1995. Please file using regular petition format for review by the Office of Petitions.

☒ STATEMENT: The entire delay in filing the required reply from the due date for the required reply until the filing of a grantable petition under 37 CFR 1.137(b) was unintentional.

THIS PORTION MUST BE COMPLETED BY THE SIGNATORY OR SIGNATORIES

I certify, in accordance with 37 CFR 1.4(d)(4) that I am:

◉ An attorney or agent registered to practice before the Patent and Trademark Office who has been given power of attorney in this application.

○ An attorney or agent registered to practice before the Patent and Trademark Office, acting in a representative capacity.

○ A sole inventor

○ A joint inventor; I certify that I am authorized to sign this submission on behalf of all of the inventors

○ A joint inventor; all of whom are signing this e-petition

○ The assignee of record of the entire interest that has properly made itself of record pursuant to 37 CFR 3.71

Signature	/Allan A. Fanucci/
Name	Allan A. Fanucci
Registration Number	30256

UNITED STATES PATENT AND TRADEMARK OFFICE

Commissioner for Patents
United States Patent and Trademark Office
P.O. Box 1450
Alexandria, VA 22313-1450
www.uspto.gov

MAILED

DEC 16 2011

OFFICE OF PETITIONS

LAWRENCE BERKELEY NATIONAL LABORATORY
Technology Transfer & Intellectual Property Managem
One Cyolotron Road MS 56A-120
BERKELEY CA 94720

In re Application of	:
Radisky, et al.	: DECISION ON PETITION
Application No. 11/915,726	:
Filed: December 10, 2007	:
Atty. Dkt. No.: IB-2167	:

This is a decision on the petition under 37 CFR 1.137(b), filed December 9, 2011, to revive the above-identified application.

The petition is GRANTED.

This application became abandoned April 14, 2011 for failure to timely submit a proper reply to the final Office action mailed October 13, 2010. The final Office action set a three (3) month shortened statutory period of time for reply. Notice of Abandonment was mailed May 24, 2011.

A grantable petition under 37 CFR 1.137(b) must be accompanied by: (1) the required reply, unless previously filed; (2) the petition fee as set forth in 37 CFR 1.17(l); (3) a showing to the satisfaction of the Commissioner that the entire delay in filing the required reply from the due date for the reply until the filing of a grantable petition pursuant to 37 CFR 1.137(b) was unintentional; and (4) any terminal disclaimer (and fee as set forth in 37 CFR 1.20(d)) required pursuant to 37 CFR 1.137(c).

The instant petition has been reviewed and found in compliance with the provisions of 37 CFR 1.137(b). Accordingly, the failure to timely submit a proper reply to the final Office action is accepted as having been unintentionally delayed.

This application file is being forwarded to Group Art Unit 1643 for processing of the RCE submitted herewith.

Telephone inquiries concerning this matter may be directed to the undersigned at (571) 272-3205.

Alesia M. Brown
Petitions Attorney
Office of Petitions

UNITED STATES PATENT AND TRADEMARK OFFICE

COMMISSIONER FOR PATENTS
UNITED STATES PATENT AND TRADEMARK OFFICE
P.O. BOX 1450
ALEXANDRIA, VA 22313-1450
www.uspto.gov

MAILED

JUN 14 2011

OFFICE OF PETITIONS

ELI LILLY & COMPANY
PATENT DIVISION
P.O. BOX 6288
INDIANAPOLIS IN 46206-6288

In re Patent No. 7,918,824
Issued: April 5, 2011
Application No. 11/915,859
Filing or 371(c) Date: November 29, 2007
Dkt. No.: X-17031

: DECISION ON APPLICATION FOR
: PATENT TERM ADJUSTMENT and
: NOTICE OF INTENT TO ISSUE
: CERTIFICATE OF CORRECTION
:

This is a decision on the petition filed on June 3, 2011 requesting that the patent term adjustment indicated on the above-identified patent be corrected to indicate that the term of the above-identified patent is extended or adjusted by 618 days. This matter is being properly treated under 37 CFR 1.705(d).

The petition to correct the patent term adjustment indicated on the above-identified patent is **GRANTED TO THE EXTENT INDICATED HEREIN.**

The above-identified application matured into U.S. Patent No. 7,918,824 on April 5, 2011. The patent issued with a patent term adjustment of 513 days. The instant petition is timely filed in accordance with 37 CFR 1.705(d). Patentee argues that the patent is entitled to 105 days of adjustment pursuant to 37 CFR 1.702(b) rather than the zero days reflected on the patent.

The arguments presented by patentee have been carefully reviewed, and are in part persuasive. Review of the record does reveal an error in the calculation of adjustment pursuant to 37 CFR 1.702(b).

The period of adjustment pursuant to 37 CFR 1.703(b) is 135 days. In an international application, the period of adjustment under 37 CFR 1.703(b) is based on the failure of the Office to issue a patent within three years after the national stage commenced under 35 U.S.C. 371(b) or (f). See, 1.702(b). The priority date of this application is June 21, 2005. The requirements for early commencement were not met; accordingly, the national stage commenced in this application on Friday, December 21, 2007. The period of adjustment pursuant to 37 CFR 1.703(b) commenced December 22, 2010, the day after the date that is three years after the date of commencement, and ended April 5, 2011, the date that the patent issued. See, 35 U.S.C. 154(b)(1)(B)(i), 37 CFR 1.702(b) and 1.703(b).

In view thereof, at the time of issuance, the patent was entitled to an overall adjustment of 648 days (513 days under 37 CFR 1.703(a) and 135 days under 37 CFR 1.703(b)).

The Office will *sua sponte* issue a certificate of correction. Pursuant to 37 CFR 1.322, the Office will not issue a certificate of correction without first providing assignee or patentee an opportunity to be heard. Accordingly, patentees are given **one (1) month or thirty (30) days**, whichever is longer, from the mail date of this decision to respond. No extensions of time will be granted under § 1.136. See 37 CFR 1.323(a)(4).

Nothing in this decision shall be construed as a waiver of the requirement of 35 U.S.C. 154(b)(4) that any civil action by an applicant dissatisfied with a determination made by the Director under 35 U.S.C. 154(b)(3) be filed in the United States District Court for the District of Columbia within 180 days after the grant of the patent.

The application is being forwarded to the Certificates of Corrections Branch for issuance of a certificate of correction. The Office will issue a certificate of correction indicating that the term of the above-identified patent is extended or adjusted by 648 days.

The Office acknowledges the previous submission of the $200.00 fee set forth in 37 CFR 1.18(e). No additional fees are required.

Telephone inquiries specific to this matter should be directed to the undersigned at (571) 272-3205.

/ALESIA M. BROWN/

Alesia M. Brown
Attorney Advisor
Office of Petitions

UNITED STATES PATENT AND TRADEMARK OFFICE

CERTIFICATE OF CORRECTION

PATENT : 7,918,824

DATED : April 5, 2011 **DRAFT**

INVENTOR(S) : Bishop, et al.

It is certified that error appears in the above-identified patent and that said Letters Patent is hereby corrected as shown below:

On the cover page,

[*] Notice: Subject to any disclaimer, the term of this patent is extended or adjusted under 35 USC 154(b) by 513 days

Delete the phrase "by 513 days" and insert -- by 648 days --

UNITED STATES PATENT AND TRADEMARK OFFICE

COMMISSIONER FOR PATENTS
UNITED STATES PATENT AND TRADEMARK OFFICE
P.O. BOX 1450
ALEXANDRIA, VA 22313-1450
www.uspto.gov

MAILED

JUL 19 2011

OFFICE OF PETITIONS

ELI LILLY & COMPANY
PATENT DIVISION
P.O. BOX 6288
INDIANAPOLIS IN 46206-6288

In re Patent No. 7,918,824
Issued: April 5, 2011
Application No. 11/915,859
Filing or 371(c) Date: November 29, 2007
Dkt. No.: X-17031

: DECISION ON APPLICATION FOR
: PATENT TERM ADJUSTMENT and
: NOTICE OF INTENT TO ISSUE
: CERTIFICATE OF CORRECTION
:

This is a decision on the petition filed on June 3, 2011 requesting that the patent term adjustment indicated on the above-identified patent be corrected to indicate that the term of the above-identified patent is extended or adjusted by 618 days. This matter is being properly treated under 37 CFR 1.705(d). This decision corrects the decision mailed June 14, 2011.

The petition to correct the patent term adjustment indicated on the above-identified patent to indicate that the term of the above-identified patent is extended or adjusted by 618 days is **GRANTED**.

Nothing in this decision shall be construed as a waiver of the requirement of 35 U.S.C. 154(b)(4) that any civil action by an applicant dissatisfied with a determination made by the Director under 35 U.S.C. 154(b)(3) be filed in the United States District Court for the District of Columbia within 180 days after the grant of the patent.

The application is being forwarded to the Certificates of Corrections Branch for issuance of a certificate of correction. The Office will issue a certificate of correction indicating that the term of the above-identified patent is extended or adjusted by 618 days.

The Office acknowledges the previous submission of the $200.00 fee set forth in 37 CFR 1.18(e). No additional fees are required.

Telephone inquiries specific to this matter should be directed to the undersigned at (571) 272-3205.

/ALESIA M. BROWN/

Alesia M. Brown
Attorney Advisor
Office of Petitions

UNITED STATES PATENT AND TRADEMARK OFFICE

CERTIFICATE OF CORRECTION

PATENT : 7,918,824

DATED : April 5, 2011 **DRAFT**

INVENTOR(S) : Bishop, et al.

It is certified that error appears in the above-identified patent and that said Letters Patent is hereby corrected as shown below:

On the cover page,

[*] Notice: Subject to any disclaimer, the term of this patent is extended or adjusted under 35 USC 154(b) by 513 days

Delete the phrase "by 513 days" and insert -- by 618 days --

UNITED STATES PATENT AND TRADEMARK OFFICE

Commissioner for Patents
United States Patent and Trademark Office
P.O. Box 1450
Alexandria, VA 22313-1450
www.uspto.gov

JOHN S. PRATT, ESQ
KILPATRICK STOCKTON, LLP
1100 PEACHTREE STREET
SUITE 2800
ATLANTA GA 30309

MAILED

SEP 27 2010

OFFICE OF PETITIONS

In re Application of	:	
Yoshiko Kitagawa et al.	:	
Application No. 11/915,879	:	DECISION ON PETITION
Filed: September 14, 2009	:	TO WITHDRAW
Attorney Docket No. 44471/351879	:	FROM RECORD
	:	

This is a decision on the Request to Withdraw as attorney or agent of record under 37 CFR § 1.36(b), filed August 24, 2010.

The request is **NOT APPROVED**.

The request cannot be approved because the requested change in the correspondence address is improper.

The Office will only accept correspondence address changes to the most current address information provided for the assignee of the entire interest *who properly became of record under 37 CFR 3.71,* or, if no assignee of the entire interest has properly been made of record, the most current address information provided for the first named inventor. 37 CFR 3.71(c) states:

> *An assignee becomes of record either in a national patent application or a reexamination proceeding by filing a statement in compliance with § 3.73(b) that is signed by a party who is authorized to act on behalf of the assignee.*

The assignee must establish its ownership of the patent to the satisfaction of the Director. In this regard, the statement under 37 CFR 3.73(b) must have either: (i) documentary evidence of a chain of title from the original owner to the assignee (*e.g.*, copy of an executed assignment), and a statement affirming that the documentary evidence of the chain of title from the original owner to the assignee was or concurrently is being submitted for recordation pursuant to § 3.11; or (ii) a statement specifying where documentary evidence of a chain of title from the original owner to the assignee is recorded in the assignment records of the Office (*e.g.*, reel and frame number).

Therefore, as there is currently no Statement under 37 CFR 3.73(b) with the current assignee information of record in the instant application, the Office cannot change the correspondence address to the address on the Request to Withdraw at this present time.

All future communications from the Office will continue to be directed to the above-listed address until otherwise notified by applicant.

Telephone inquires concerning this decision should be directed to JoAnne Burke at 571-272-4584.

/JoAnne Burke/
JoAnne Burke
Petitions Examiner
Office of Petitions

UNITED STATES PATENT AND TRADEMARK OFFICE

Commissioner for Patents
United States Patent and Trademark Office
P.O. Box 1450
Alexandria, VA 22313-1450
www.uspto.gov

JOHN S. PRATT, ESQ
KILPATRICK STOCKTON, LLP
1100 PEACHTREE STREET
SUITE 2800
ATLANTA GA 30309

MAILED

NOV 18 2010

OFFICE OF PETITIONS

In re Application of	:	
Yoshiko Kitagawa et al.	:	
Application No. 11/915,879	:	DECISION ON PETITION
Filed: September 14, 2009	:	TO WITHDRAW
Attorney Docket No. **44471/351879**	:	FROM RECORD
	:	

This is a decision on the renewed Request to Withdraw as attorney or agent of record under 37 CFR § 1.36(b), filed October 29, 2010.

The request is **APPROVED**.

A grantable request to withdraw as attorney/agent of record must be signed by every attorney/agent seeking to withdraw or contain a clear indication that one attorney is signing on behalf of another/others. The Office requires the practitioner(s) requesting withdrawal to certify that he, she, or they have: (1) given reasonable notice to the client, prior to the expiration of the response period, that the practitioner(s) intends to withdraw from employment; (2) delivered to the client or a duly authorized representative of the client all papers and property (including funds) to which the client is entitled; and (3) notified the client of any responses that may be due and the time frame within which the client must respond , pursuant to 37 CFR 10.40.

The request was signed by Brenda O. Holmes on behalf of all attorneys of record who are associated with Customer Number 23370.

All attorneys/agents associated with Customer Number 23370 have been withdrawn.

Applicant is reminded that there is no attorney of record at this time.

The correspondence address of record has been changed and all future correspondence will be directed to the assignee of the entire interest at the address indicated below.

There is no outstanding Office action that requires a reply from the applicant.

Telephone inquiries concerning this decision should be directed to the undersigned at 571-272-4584.

/JoAnne Burke/
JoAnne Burke
Petitions Examiner
Office of Petitions

cc: Mediastick, Inc.
3-14, Hiroo 2-Chome, Shibuya-ku
Tokyo, Japan 150-0012

UNITED STATES PATENT AND TRADEMARK OFFICE

Commissioner for Patents
United States Patent and Trademark Office
P.O. Box 1450
Alexandria, VA 22313-1450
www.uspto.gov

Paper No.

Avery Dennison Corporation
Amanda Wittine
8080 Norton Parkway
22-D
Mentor OH 44060

MAILED
JAN 20 2012
OFFICE OF PETITIONS

In re Application of :
Ralph Kitson : DECISION ON
Application No. 11/915,880 : PETITION
Filed: November 29, 2007 :
Atty Docket No. **AVERP3996WOUS**:

This is a decision on the PETITION FOR REVIVAL OF AN APPLICATION FOR PATENT ABANDONED UNINTENTIONALLY UNDER 37 CFR 1.137(b) filed December 27, 2011.

The petition is **GRANTED**.

The above-identified application was abandoned for failure to file a reply to the non-final Office action mailed March 31, 2011. This Office action set a shortened statutory period for reply of three (3) months from the mail date of the action. No reply received and no extension of time obtained, the application became abandoned effective July 1, 2011. A courtesy Notice of Abandonment was mailed on October 31, 2011.

On petition, petitioner submitted a reply in the form of an amendment; paid the petition fee; and made the required statement of unintentional delay.

An extension of time under 37 CFR 1.136 must be filed prior to the expiration of the maximum extendable period for reply. See In re Application of S., 8 USPQ2d 1630, 1631 (Comm'r Pats. 1988). Since the $1270 extension of time fee submitted with the petition on December 27, 2011 was submitted subsequent to the

maximum extendable period for reply, this fee is unnecessary and is being refunded.

Technology Center AU 1767 has been advised of this decision. The application is, thereby, forwarded to the examiner for consideration of the amendment submitted on petition filed December 27, 2011.

Telephone inquiries concerning this decision should be directed to the undersigned at (571) 272-3219.

Nancy Johnson
Senior Petitions Attorney
Office of Petitions

1 3 SEP 2010

11United States Patent and Trademark Office

Commissioner for Patents
United States Patent and Trademark Office
P.O. Box 1450
Alexandria, VA 22313-1450
www.uspto.gov

INTELLECTUAL PROPERTY / TECHNOLOGY LAW
PO BOX 14329
RESEARCH TRIANGLE PARK NC 27709

In re Application of
Kingery et al.
Application No.: 11/915,996
PCT No.: PCT/US2006/021622
Int. Filing Date: 05 June 2006
Priority Date: 06 June 2005
Attorney Docket No.: 2771-758
For: Fluid Storage And Dispensing Systems And Processes

DECISION

This is in response to the request under 37 CFR 1.48 filed on 06 January 2010, which is being treated under 37 CFR 1.497(d).

BACKGROUND

This international application was filed on 05 June 2006, claimed an earlier priority date of 06 June 2005, and designated the U.S. The 30 month time period for paying the basic national fee in the United States expired at midnight on 06 December 2007. Applicants filed *inter alia* the basic national fee on 29 November 2007.

On 17 September 2009, a Notification of Missing Requirements (Form PCT/DO/EO/905) was mailed, requiring an oath or declaration compliant with 37 CFR 1.497(a) and (b) and the surcharge under 37 CFR 1.492(h).

DISCUSSION

Counsel requests that the inventive entity of this application be changed by way of deleting inventors John R. Kingery, Dennis Brestovansky, Kirk Mikkelsen, Matthew Smith, Donald D. Ware, Greg Nelson, Robert Haapala and Russell Oberg. Relief is requested under 37 CFR 1.48, but the regulation most pertinent to this situation is 37 CFR 1.497(d). A declaration filed under 37 CFR 1.497 (d) must be by the actual inventor or inventors as required under 37 CFR 1.63 or as permitted by 37 CFR 1.42, 1.43 or 1.47. The declaration must be accompanied by (1) a statement from each person being added as an inventor and from each person being deleted as an inventor that the error in inventorship occurred without deceptive intention on his or her part, (2) the processing fee set forth in 37 CFR 1.17; and (3) if an assignment has been executed by any of the original named inventors, the written consent of the assignee (*See* 37 CFR 3.73(b)).

Regarding requirement (1), applicants have provided appropriate statements signed by inventors Kingery, Brestovansky, Mikkelsen, Smith, Ware, Nelson, Haapala and Oberg. The published international application also nominates Hoyt, Gerold, Nesdahl and Jancsek as applicants/inventors, but no statements by them have been provided.

Regarding requirement (2), the processing fee has been paid.

Regarding requirement (3), counsel has presented written "Consent Of Assignee..." documents signed by officers of Advanced Technology Materials, Inc. and Tokyo Electron Limited. These statements identify the respective entities as "joint owner," but do not specify the

percentage ownership enjoyed by each. In addition, the statements were not accompanied by documentary evidence of a chain of title, or identification of the reel and frame numbers where such evidence has been recorded in the USPTO. Therefore, the requirements of 37 CFR 3.73(b) and 3.73(c)(2) have not been satisfied..

The declaration filed on 06 January 2010 and naming inventors Kingery et al. is defective because it includes un-initialed alterations and fails to nominate the same inventive entity as the published international application.

The Filing Receipt and Notice of Acceptance (Form PCT/DO/EO/903) mailed on 22 January 2010 were issued in error, and both are hereby **VACATED**.

DECISION

The declaration is **NOT ACCEPTED** under 37 CFR 1.497(d), without prejudice.

If reconsideration on the merits of this matter is desired, a proper response must be filed within **TWO (2) MONTHS** from the mail date of this decision. Any reconsideration request should include a cover letter entitled "Renewed Submission Under 37 CFR 1.497(d)." Extensions of time may be obtained under 37 CFR 1.136(a). Failure to timely file a proper response will result in **ABANDONMENT**.

Any further correspondence with respect to this matter may be filed electronically via EFS-Web selecting the document description "Petition for review and processing by the PCT Legal Office" or by mail addressed to Mail Stop PCT, Commissioner for Patents, Office of PCT Legal Administration, P.O. Box 1450, Alexandria, Virginia 22313-1450, with the contents of the letter marked to the attention of the Office of PCT Legal Administration.

/George Dombroske/
George Dombroske
PCT Legal Examiner
Office of PCT Legal Administration
Tel: (571) 272-3283

11United States Patent and Trademark Office

Commissioner for Patents
United States Patent and Trademark Office
P.O. Box 1450
Alexandria, VA 22313-1450
www.uspto.gov

MAILED

MAY 06 2011

PCT LEGAL ADMINISTRATION

Hultquist IP
P.O. Box 14329
RESEARCH TRIANGLE PARK NC 27709

In re Application of
Kingery et al.
Application No.: 11/915,996
PCT No.: PCT/US2006/021622
Int. Filing Date: 05 June 2006
Priority Date: 06 June 2005
Attorney Docket No.: 2771-758
For: Fluid Storage And Dispensing Systems And Processes

DECISION

This is in response to the renewed submissions under 37 CFR 1.497(d) filed on 14 February 2011 and 08 March 2011, and the included request for treatment under 37 CFR 1.47(a).

DISCUSSION

Petition Under 37 CFR 1.47(a)

The petition filed on 08 March 2011 requests withdrawal of the petition under 37 CFR 1.47(a) filed on 14 February 2011, in view of the concurrent submission of a declaration "executed by co-inventor Brestovansky on November 10, 2010." In view of the submission of a declaration signed by Brestovansky, the petition under 37 CFR 1.47(a) with respect to him is **DISMISSED AS MOOT**, without prejudice.

To the extent that petitioner wishes to excuse the absence of Gerold's signature on a statement under 37 CFR 1.497(d)(1), counsel's attention is drawn to MPEP 201.03, which explains (in part) that

> On very infrequent occasions, the requirements of 37 CFR 1.48(a) have been waived upon the filing of a *>petition< and fee under 37 CFR 1.183 (along with the request and fee under 37 CFR 1.48(a)) to permit the filing of a statement by less than all the parties required to submit a statement. In re Cooper, 230 USPQ 638, 639 (Dep. Assist. Comm'r Pat. 1986). However, such a waiver will not be considered unless the facts of record unequivocally support the correction sought. In re Hardee, 223 USPQ 1122, 1123 (Comm'r Pat. 1984). As 37 CFR 1.48(a) is intended as a simple procedural remedy and does not represent a substantive determination as to inventorship, issues relating to the inventors' or alleged inventors' actual contributions to conception and reduction to practice are not appropriate for consideration in determining whether the record unequivocally supports the correction sought.
>
> In those situations where an inventor to be added refuses to submit a statement supporting the addition or such party cannot be reached, waiver under 37 CFR 1.183 of the requirement for a statement from that party would be appropriate upon a showing of such refusal or inability to reach the inventor. Every existing assignee of the original named inventors must give its consent to the requested correction. Where there is more than one assignee giving its consent, the extent of that interest (percentage) should be shown. Where no assignment has been executed by the inventors, or if deletion of a refusing inventor is requested,

> waiver will not be granted absent unequivocal support for the correction sought. Petitions under 37 CFR 1.47 are not applicable to the requirement for statements from each originally named inventor.
>
> An available remedy to obtain correction of inventorship where waiver of a required statement is not available to correct the inventorship in a particular application is to refile the application naming the correct inventive entity. A request under 37 CFR 1.48(a) would not then be required in the newly filed application as no correction would be needed. Furthermore, a request under 37 CFR 1.48(a) would also not be required in the prior application that was refiled, since the prior application will be abandoned. Benefit of the parent application's filing date would be available under 35 U.S.C. 120 provided there is at least one inventor overlap between the two applications. (Note: a sole-to-sole correction would not obtain benefit under 35 U.S.C. 120).

Similar policy considerations apply to 37 CFR 1.497(d) and, as such, 37 CFR 1.47 is not available to excuse the absence of an inventor's signature on a statement under 37 CFR 1.497(d)(1). Petitioner may wish to consider filing a 35 U.S.C. 111(a) continuation of the international application.

Request Under 37 CFR 1.497(d)

In a Decision mailed on 13 September 2010, the declaration was not accepted under 37 CFR 1.497(d), without prejudice, because

> Regarding requirement (1), applicants have provided appropriate statements signed by inventors Kingery, Brestovansky, Mikkelsen, Smith, Ware, Nelson, Haapala and Oberg. The published international application also nominates Hoyt, Gerold, Nesdahl and Jancsek as applicants/inventors, but no statements by them have been provided.
>
> Regarding requirement (3), counsel has presented written "Consent Of Assignee..." documents signed by officers of Advanced Technology Materials, Inc. and Tokyo Electron Limited. These statements identify the respective entities as "joint owner," but do not specify the percentage ownership enjoyed by each. In addition, the statements were not accompanied by documentary evidence of a chain of title, or identification of the reel and frame numbers where such evidence has been recorded in the USPTO. Therefore, the requirements of 37 CFR 3.73(b) and 3.73(c)(2) have not been satisfied..
>
> The declaration filed on 06 January 2010 and naming inventors Kingery et al. is defective because it includes un-initialed alterations and fails to nominate the same inventive entity as the published international application.

In response, with respect to requirement (1), petitioner now has provided statements signed by Hoyt, Neddahl and Jancsek, but no such statement from Gerold has been provided.

With respect to requirement (3), petitioner has provided two new statements under 37 CFR 3.73(b), both of which refer to an assignment from Advanced Technology Materials, Inc. to Tokyo Electron Limited and state that "Copies of assignments or other documents in the chain of title are attached." However, it is not clear that the assignment in question was recorded, or was submitted for recordation concurrently with the filing of the 37 CFR 3.73(b) statements.

DECISION

The petition under 37 CFR 1.47(a) is **DISMISSED AS MOOT**, without prejudice.

The declaration is **NOT ACCEPTED** under 37 CFR 1.497(d), without prejudice.

If reconsideration on the merits of this matter is desired, a proper response must be filed within **TWO (2) MONTHS** from the mail date of this decision. Any reconsideration request should include a cover letter entitled "Renewed Submission Under 37 CFR 1.497(d)." Extensions of time may be obtained under 37 CFR 1.136(a). Failure to timely file a proper response will result in **ABANDONMENT**.

Any further correspondence with respect to this matter may be filed electronically via EFS-Web selecting the document description "Petition for review and processing by the PCT Legal Office" or by mail addressed to Mail Stop PCT, Commissioner for Patents, Office of PCT Legal Administration, P.O. Box 1450, Alexandria, Virginia 22313-1450, with the contents of the letter marked to the attention of the Office of PCT Legal Administration.

/George Dombroske/
George Dombroske
PCT Legal Examiner
Office of PCT Legal Administration
Tel: (571) 272-3283

UNITED STATES PATENT AND TRADEMARK OFFICE

Commissioner for Patents
United States Patent and Trademark Office
P.O. Box 1450
Alexandria, VA 22313-1450
www.uspto.gov

ROTHWELL, FIGG, ERNST & MANBECK, P.C.
1425 K STREET, N.W.
SUITE 800
WASHINGTON DC 20005

MAILED

DEC 15 2011

OFFICE OF PETITIONS

In re Application of	:	
HEID, et al	:	
Application No. 11/916,025	:	DECISION ON PETITION
Filed: December 10, 2008	:	TO WITHDRAW
Attorney Docket No. 3749-118	:	FROM RECORD
	:	

This is a decision on the Request to Withdraw as attorney or agent of record under 37 C.F.R. § 1.36(b), filed November 22, 2011.

The request is **NOT APPROVED.**

A grantable request to withdraw as attorney/agent of record must be signed by every attorney/agent seeking to withdraw or contain a clear indication that one attorney is signing on behalf of another/others. The Office requires the practitioner(s) requesting withdrawal to certify that he, she, or they have: (1) given reasonable notice to the client, prior to the expiration of the response period, that the practitioner(s) intends to withdraw from employment; (2) delivered to the client or a duly authorized representative of the client all papers and property (including funds) to which the client is entitled; and (3) notified the client of any responses that may be due and the time frame within which the client must respond, pursuant 37 CFR 10.40(c).

The request cannot be approved because there is no indication that the acts noted above at items (1) and (3) have been performed.

The request cannot be approved because no reason for the withdrawal has been provided. In this regard, the Office cannot determine whether practitioner's request is one of the mandatory or permissive reasons enumerated in 37 CFR 10.40. Any subsequent requests must include reasons for withdrawal. Please note that there is a space provided for on PTO/SB/83 (Request to Withdraw as Attorney or Agent) to supply practitioner's reasons.

Further, the request cannot be approved because no correspondence address for future communications from the Office has been provided.

The Office will either change the correspondence address of record to the most current address information provided for the assignee of the entire interest who properly became of record under 37 CFR 3.71 or, if no assignee of the entire interest has properly been made of record under 37 CFR 3.71, the most current address information provided for the first named inventor.

All future communications from the Office will continue to be directed to the above-listed address until otherwise notified by the applicant.

Telephone inquiries concerning this decision should be directed to the undersigned at (571) 272-6735.

/Diane Goodwyn/
Diane Goodwyn
Petitions Examiner
Office of Petitions

UNITED STATES PATENT AND TRADEMARK OFFICE

Commissioner for Patents
United States Patent and Trademark Office
P.O. Box 1450
Alexandria, VA 22313-1450
www.uspto.gov

ROTHWELL, FIGG, ERNST & MANBECK, P.C.
1425 K STREET, N.W.
SUITE 800
WASHINGTON DC 20005

MAILED
FEB 14 2012
OFFICE OF PETITIONS

In re Application of	:	
HEID, et al	:	
Application No. 11/916,025	:	DECISION ON PETITION
Filed: December 10, 2008	:	TO WITHDRAW
Attorney Docket No. 3749-118	:	FROM RECORD
	:	

This is a decision on the Request to Withdraw as attorney or agent of record under 37 C.F.R. 1.36(b), filed February 2, 2012.

The request is **NOT APPROVED.**

The request to withdraw from record cannot be approved because the request does not include the current correspondence address of a law firm or practitioner who has filed a proper power of attorney. Therefore, Customer Number 22434, as indicated on the Request for Withdrawal as Attorney or Agent filed February 2, 2012, cannot be accepted.

The Office will no longer accept address changes to a new practitioner or law firm filed with a Request, absent the filing of a power of attorney to the new representative. The Office will either change the correspondence address of record to the most current address information provided for the assignee of the entire interest who properly became of record under 37 CFR 3.71 or, if no assignee of the entire interest has properly been made of record under 37 CFR 3.71, the most current address information provided for the first named inventor.

All future communications from the Office will continue to be directed to the above-identified address until otherwise properly notified.

Telephone inquiries concerning this decision should be directed to the undersigned at (571) 272- 6735.

/Diane Goodwyn/
Diane Goodwyn
Petitions Examiner
Office of Petitions

UNITED STATES PATENT AND TRADEMARK OFFICE

Commissioner for Patents
United States Patent and Trademark Office
P.O. Box 1450
Alexandria, VA 22313-1450
www.uspto.gov

Patent No. : 7,896,850 B2
Ser. No. : 11/916,078
Inventor(s) : Kronestedt et al.
Issued : Mar. 1, 2011
Title : DEVICE FOR DELIVERING MEDICAMENT
Docket No. : 0225-026
Re: Request for Certificate of Correction

Consideration has been given your request for the issuance of a certificate of correction for the above-identified patent under the provisions of Rule(s) 1.322 and/or 1.323.

Assignees' names and addresses (assignment data) printed in a patent, are based *solely* on information supplied in the appropriate space for identifying the assignment data, i.e., item 3 of the Issue Fee Transmittal Form PTOL-85B. Granting of a request under 37 CFR 3.81(b) is required to correct applicant's error providing ***incorrect or erroneous*** assignment data, *before* issuance of a Certificate of Correction, under 37 CFR 1.323 *(see Manual of Patent Examining Procedures (M.P.E.P) Chp.1400, sect. 1481).* This procedure is required *at any time after the issue fee is paid*, including after issuance of the patent.

In view of the foregoing, your request, in this matter, is hereby denied.

A request to correct the Assignee under 37 CFR 3.81(b) should include:

A. **the processing fee set forth in 37 CFR 1. 17(i) (currently $130);**
B. a statement that the failure to include the correct assignee name on the PTOL-85B was inadvertent; and
C. a copy of the Notice of Recordation of Assignment Document, reflecting the reel and frame number where the assignment(s) is recorded and/or reflecting proof of *the date* the assignment was submitted for recordation.

In the Request, Applicant(s) may request that the file be forwarded to Certificates of Correction Branch, for issuance of a Certificate of Correction, if the Request is granted.

Any request under 37 CFR 3.81(b) should be directed to the following address or facsimile number:

By mail: Mail Stop PETITIONS
Commissioner for Patents
Post Office Box 1450
Alexandria, VA 22313-1450

By hand: Customer Service Window
Mail Stop Petitions
Randolph Building
401 Dulany Street
Alexandria, VA 22314

By fax: (703) 872-9306
ATTN: Office of Petitions

If a fee (currently $100) was previously submitted for consideration of a Request for Certificate of Correction, under CFR 1.323, to correct assignment data, no additional fee is required.

Ennis Young
For Mary Diggs
Decisions & Certificates
of Correction Branch
(571) **272-3435** or (703) 756-1814

UNITED STATES PATENT AND TRADEMARK OFFICE

Commissioner for Patents
United States Patent and Trademark Office
P.O. Box 1450
Alexandria, VA 22313-1450
www.uspto.gov

MAILED
MAY 31 2011
OFFICE OF PETITIONS

POTOMAC PATENT GROUP PLLC
P.O. BOX 270
FREDERICKSBURG VA 22404

In re Patent No. 7,896,850	:	
Issue Date: March 1, 2011	:	
Application No. 11/916,078	:	ON PETITION
Filed: January 10, 2008	:	
Attorney Docket No. 0225-026	:	

This is a decision on the petition filed April 25, 2011, which is being treated as a request under 37 CFR 3.81(b)[1] to correct the name of the assignee on the front page of the above-identified patent by way of a Certificate of Correction.

The request is **GRANTED**.

Telephone inquiries concerning this decision may be directed to Diane Goodwyn at (571) 272-6735. Inquiries regarding the issuance of a certificate of correction should be directed to the Certificate of Correction Branch at (571) 272-4200.

The Certificates of Correction Branch will be notified of this decision granting the petition under 37 CFR 3.81(b) and directing issuance of the requested Certificate of Correction.

Thurman K. Page
Petitions Examiner
Office of Petitions

[1] *See* MPEP 1309, subsection II; and Official Gazette of June 22, 2004.

UNITED STATES PATENT AND TRADEMARK OFFICE

23 SEP 2010

Commissioner for Patents
United States Patent and Trademark Office
P.O. Box 1450
Alexandria, VA 22313-1450
www.uspto.gov

22859
FREDRIKSON & BYRON, P.A.
Intellectual Property Group
200 South Sixth Street, Suite 4000
Minneapolis, MN 55402

In re Application of
MASTERS *et al*
U.S. Application No.: 11/916,165
PCT No.: PCT/US2005/021553
Int. Filing Date: 17 June 2005
Priority Date: 14 June 2004
Attorney Docket No.: 45795.91.7
For: ENCAPSULATED OR COATED STENT SYSTEMS

DECISION ON PETITION UNDER 37 CFR 1.137(b)

Applicants' petition to revive under 37 CFR 1.137(b) filed on 30 November 2007 is hereby **GRANTED** as follows:

The proper fees and the petition fee for a small entity have been paid. Applicants made the required statement pursuant to 37 CFR 1.137(b)(3). A terminal disclaimer is not required. Accordingly, all requirements under 37 CFR 1.137(b) have been satisfied.

A declaration in compliance with 37 CFR 1.497(a) and (b) was not submitted.

This application is being forwarded to the United States Designated/Elected Office for further processing including mailing a Notification of Missing Requirements Under 35 U.S.C. 371 in the United States Designated/Elected Office (DO/EO/US) (Form PCT/DO/EO/905) indicating that an oath or declaration in compliance with 37 CFR 1.497(a) and (b) is required.

James Thomson
Attorney Advisor
Office of PCT Legal Administration

Tel.: (571) 272-3302

UNITED STATES PATENT AND TRADEMARK OFFICE

Commissioner for Patents
United States Patent and Trademark Office
P.O. Box 1450
Alexandria, VA 22313-1450
www.uspto.gov

FISH & RICHARDSON P.C. (TC)
PO BOX 1022
MINNEAPOLIS MN 55440-1022

MAILED

APR 06 2012

OFFICE OF PETITIONS

In re Application of	:	
DIVIRGILIO, et al	:	
Application No. 11/916,237	:	DECISION ON PETITION
Filed: December 8, 2009	:	TO WITHDRAW
Attorney Docket No. 17783-005US1	:	FROM RECORD
	:	

This is a decision on the Request to Withdraw as attorney or agent of record under 37 C.F.R. § 1.36(b), filed February 10, 2012.

The request is **APPROVED**.

A grantable request to withdraw as attorney/agent of record must be signed by every attorney/agent seeking to withdraw or contain a clear indication that one attorney is signing on behalf of another/others. The Office requires the practitioner(s) requesting withdrawal to certify that he, she, or they have: (1) given reasonable notice to the client, prior to the expiration of the response period, that the practitioner(s) intends to withdraw from employment; (2) delivered to the client or a duly authorized representative of the client all papers and property (including funds) to which the client is entitled; and (3) notified the client of any responses that may be due and the time frame within which the client must respond, pursuant 37 CFR 10.40(c).

The request was signed by Stuart Macphail on behalf of all attorneys associated with Customer Number 26191.

All attorneys associated with Customer Number 26191 have been withdrawn.

Applicant is reminded that there is no attorney of record at this time.

The correspondence address has been changed and the new correspondence address is the address copied below until otherwise properly notified by the applicant.

Telephone inquiries concerning this decision should be directed to the undersigned at (571) 272-6735.

/Diane Goodwyn/
Diane Goodwyn
Petitions Examiner
Office of Petitions

cc: DUSKA SCIENTIFIC CO.
C/O SHEPARD GOLDBERG,
1600 HILARY COURT
HEWLETT NY 11557

UNITED STATES PATENT AND TRADEMARK OFFICE

UNITED STATES DEPARTMENT OF COMMERCE
United States Patent and Trademark Office
Address: COMMISSIONER FOR PATENTS
P.O. Box 1450
Alexandria, Virginia 22313-1450
www.uspto.gov

APPLICATION NUMBER	FILING OR 371(C) DATE	FIRST NAMED APPLICANT	ATTY. DOCKET NO./TITLE
11/916,237	12/08/2009	Francesco Divirgilio	17783-005US1

CONFIRMATION NO. 3217

POWER OF ATTORNEY NOTICE

26191
FISH & RICHARDSON P.C. (TC)
PO BOX 1022
MINNEAPOLIS, MN 55440-1022

OC000000053574599

Date Mailed: 04/05/2012

NOTICE REGARDING CHANGE OF POWER OF ATTORNEY

This is in response to the Power of Attorney filed 02/10/2012.

- The withdrawal as attorney in this application has been accepted. Future correspondence will be mailed to the new address of record. 37 CFR 1.33.

/dcgoodwyn/

Office of Data Management, Application Assistance Unit (571) 272-4000, or (571) 272-4200, or 1-888-786-0101

UNITED STATES PATENT AND TRADEMARK OFFICE

Commissioner for Patents
United States Patent and Trademark Office
P.O. Box 1450
Alexandria, VA 22313-1450
www.uspto.gov

The Exeter Law Group LLP
40 Wall Street
Floor 28
New York, NY 10005

MAILED

DEC 03 2010

PCT LEGAL ADMINISTRATION

In re Application of :
LI et al. :
U.S. Application No.: 11/916,242 :
PCT No.: PCT/CN2007/002782 : PETITION UNDER
Int. Filing Date: 20 September 2007 : 37 CFR 1.47(a)
Priority Date: None :
Attorney Docket No.: 618902004500 :
For: ETCH ISOLATION LPCC/QFN STRIP :

This decision is issued in response to applicants' "Petition pursuant to 37 CFR 1.47(a)" filed 07 October 2010 to accept the application without the signature of joint-inventor, Kwok Cheung TSANG.

BACKGROUND

On 20 September 2007, applicants filed international application PCT/CN2007/002782. A copy of the international application was communicated to the United States Patent and Trademark Office from the International Bureau on 26 March 2009. Pursuant to 37 CFR 1.495, the deadline for payment of the basic national fee in the United States was to expire 30 months from the international filing date, 20 March 2010.

On 30 November 2007, applicants filed a transmittal letter for entry into the national stage in the United States, which accompanied by, inter alia, the requisite basic national fee as required by 35 U.S.C. 371(c)(1); a preliminary amendment; and an application data sheet.

On 08 April 2010, the United Stated Designated/Elected Office mailed a Notification of Missing Requirements under 35 U.S.C. 371 (Form PCT/DO/EO/905) indicating that an oath or declaration in compliance with 37 CFR 1.497(a) and (b) must be filed. The notification set a two-month time limit in which to respond.

On 07 October 2010, applicants filed the present petition under 37 CFR 1.47(a).

DISCUSSION

A petition under 37 CFR 1.47(a) must be accompanied by: (1) the fee under 37 CFR 1.17, (2) factual proof that the missing joint inventor refuses to execute the application or

cannot be reached after diligent effort, (3) a statement of the last known address of the missing inventor, and (4) an oath or declaration by each 37 CFR 1.47(a) applicant on his or her own behalf and behalf of the nonsigning joint inventor. Items (1), (3) and (4) have been satisfied.

As to item (2), petitioner states that Kwok Cheung TSANG cannot be found or reached after diligent effort. Section 409.03(d) of the Manual of Patent Examining Procedure (M.P.E.P.), **Proof of Unavailability or Refusal**, states, in part:

> Where inability to find or reach a nonsigning inventor "after diligent effort" is the reason for filing under 37 CFR 1.47, a statement of facts should be submitted that fully describes the exact facts which are relied on to establish that a diligent effort was made.
>
> The fact that a nonsigning inventor is on vacation or out of town and is therefore temporarily unavailable to sign the declaration is not an acceptable reason for filing under 37 CFR 1.47.
>
> The statement of facts must be signed, where at all possible, by a person having firsthand knowledge of the facts recited therein. Statements based on hearsay will not normally be accepted. Copies of documentary evidence such as internet searches, certified mail return receipts, cover letters of instructions, telegrams, that support a finding that the nonsigning inventor could not be found or reached should be made part of the statement. The steps taken to locate the whereabouts of the nonsigning inventor should be included statement of facts. It is important that the statement contain facts as opposed to conclusions.

A review of the present petition reveals that petitioner has not provided an acceptable showing that a diligent effort was made to locate the nonsigning inventor, Kwok Cheung TSANG. The petition alleges that inventor Kwok Cheung TSANG cannot be found or located, however, no documentary evidence to support the attempt(s) was provided with the petition.

Before item (2) can be considered satisfied, applicants must provide the required firsthand evidence (with documentary support) demonstrating that a diligent effort has been made to locate the nonsigning inventor(s). A diligent effort to locate the inventor should include an internet search, and the results of such a search should be included in any subsequent submission herein.

CONCLUSION

The petition under 37 CFR 1.47(a) is DISMISSED without prejudice.

If reconsideration on the merits of this petition is desired, a proper response must be filed within TWO (2) MONTH from the mail date of this decision. Any reconsideration

request should include a cover letter entitled "Renewed Petition Under 37 CFR 1.47(a)." No additional petition fee is required.

Any further correspondence with respect to this matter may be filed electronically via EFS-Web selecting the document description "Petition for review and processing by the PCT Legal Office" or by mail addressed to Mail Stop PCT, Commissioner for Patents, Office of PCT Legal Administration, P.O. Box 1450, Alexandria, Virginia 22313-1450, with the contents of the letter marked to the attention of the Office of PCT Legal Administration.

Anthony Smith
Attorney-Advisor
Office of PCT Legal Administration
Telephone: (571) 272-3298

UNITED STATES PATENT AND TRADEMARK OFFICE

Commissioner for Patents
United States Patent and Trademark Office
P.O. Box 1450
Alexandria, VA 22313-1450
www.uspto.gov

The Exeter Law Group LLP
40 Wall Street
Floor 28
New York, NY 10005

MAILED
AUG 15 2011
PCT LEGAL ADMINISTRATION

In re Application of :
LI et al. :
U.S. Application No.: 11/916,242 :
PCT No.: PCT/CN2007/002782 :
Int. Filing Date: 20 September 2007 :
Priority Date: None :
Attorney Docket No.: 618902004500 :
For: ETCH ISOLATION LPCC/QFN STRIP :

PETITION UNDER
37 CFR 1.47(a)

In a decision mailed by this Office on 03 December 2010, applicants' petition under 37 CFR 1.47(a) was dismissed without prejudice for failing to satisfy all the requirements of a grantable petition.

On 02 June 2011, petitioner filed the renewed petition considered herein. The renewed petition includes a statement from Jonathan Ross, with accompanying documents, which provides the required firsthand evidence that the nonsigning inventor (Kwok Cheung TSANG) could not be reached after diligent effort. These materials satisfy the outstanding requirements for a grantable petition under 37 CFR 1.47(a). The petition under 37 CFR 1.47(a) is **GRANTED**.

The application is accepted without the signature of nonsigning inventor, Kwok Cheung TSANG.

A notice of the acceptance of the application will be published in the Official Gazette, and a letter informing the nonsigning inventor of the application will be forwarded to the inventor's last-known address, as set forth in the petition.

This application is being returned to the United States Designated/Elected Office for processing in accordance with this decision.

Anthony Smith
Attorney-Advisor
Office of PCT Legal Administration
Telephone: (571) 272-3298

UNITED STATES PATENT AND TRADEMARK OFFICE

Commissioner for Patents
United States Patent and Trademark Office
P.O. Box 1450
Alexandria, VA 22313-1450
www.uspto.gov

Kwok Cheung TSANG
Flat F, 34/F Block 1
Metro Harbour View
Kowloon, Hong Kong
China

MAILED
AUG 15 2011
PCT LEGAL ADMINISTRATION

In re Application of
LI et al.
U.S. Application No.: 11/916,242
PCT No.: PCT/CN2007/002782
Int. Filing Date: 20 September 2007
Priority Date: None
Attorney Docket No.: 618902004500
For: ETCH ISOLATION LPCC/QFN STRIP

Dear Kwok Cheung TSANG:

You are named as an inventor in the above identified United States patent application, filed under the provisions of 37 CFR 1.47(a) and 35 U.S.C. 116. Should a patent be granted, you will be designated as an inventor.

As a named inventor, you are entitled to inspect any paper in the file wrapper of the application, order copies of all or any part thereof (at a prepaid cost per 37 CFR 1.19) or to make your position of record in the application. Alternatively, you may arrange to do any of the preceding through a registered patent agent or attorney presenting written authorization from you. If you care to join in the application, counsel of record (see below) would presumably assist you. Joining in the application would entail the filing of an appropriate oath or declaration by you pursuant to 37 CFR 1.63.

Anthony Smith
Attorney-Advisor
Office of PCT Legal Administration
Telephone: (571) 272-3298
Facsimile: (571) 273-0459

Counsel of Record:
The Exeter Law Group LLP
40 Wall Street
Floor 28
New York, NY 10005

UNITED STATES PATENT AND TRADEMARK OFFICE

Commissioner for Patents
United States Patent and Trademark Office
P.O. Box 1450
Alexandria, VA 22313-1450
www.uspto.gov

SEED INTELLECTUAL PROPERTY LAW GROUP PLLC
701 FIFTH AVE
SUITE 5400
SEATTLE, WA 98104

MAILED
MAR 3 1 2011
OFFICE OF PETITIONS

Applicant: Jianmin, et al.
Appl. No.: 11/916,243
International Filing Date: June 5, 2006
Title: Aminothiazole Derivatives as Human Stearoyl-COA Desaturase Inhibitors
Attorney Docket: 980057.436USPC
Pub. No.: US 2010/0152187 A1
Pub. Date: June 17, 2010

This is a decision on the request for a corrected patent application publication under 37 CFR 1.221(b), received on July 20, 2010, for the above-identified application.

The request is DISMISSED.

Applicant requests that the application be republished because the patent application publication contains an error in claim 38, wherein the letter "o" is missing from the word "carbonyl".

37 CFR 1.221 (b) is applicable: "only when the Office makes a **material mistake** which is apparent from Office records.... Any request for a corrected publication or revised patent application publication other than provided as provided in paragraph (a) of this section must be filed within two months from the date of the patent application publication. This period is not extendable" A material mistake must affect the public's ability to appreciate the technical disclosure of the patent application publication, to determine the scope of the patent application publication, or to determine the scope of the provisional rights that an applicant may seek to enforce upon issuance of a patent. [1]

The error in claims 38 wherein the letter "o" is missing from the word "carbonyl" may be an Office error, but it is not a material Office error under 37 CFR 1.221. The error in published claim 38, wherein the letter "o" is missing from the word "carbonyl" is clearly a typographical error. Thus, one of ordinary skill in the art would clearly understand the nature of the typographical error and would not be misled as to the scope of the claim. This error therefore does not affect the public's ability to appreciate the technical disclosure of the patent application

[1] Changes to Implement Eighteen-Month Publication of Patent Applications, 65 FR 57023, 57038 (Sept. 20, 2000), 1239, Off. Gaz. Pat. Office Notices 63, 75 (Oct. 10, 2000) (final rule).

publication, to determine the scope of the patent application publication, or to determine the scope of the provisional rights that an applicant may seek to enforce upon issuance of a patent.

The applicant is advised that a "request for republication of an application previously published" may be filed under 37 CFR 1.221(a). Such a request for republication "must include a copy of the application compliance with the Office's electronic filing system requirements and be accompanied by the publication fee set forth in § 1.18(d) and the processing fee set forth in § 1.17(i)." If the request for republication does not comply with the electronic filing system requirements, the republication will not take place and the publication fee set forth in § 1.18(d) will be refunded. The processing fee will be retained.

A guide for filing a request for a Pre-Grant Publication, such as a request for republication, may be found on the link below:

http://www.uspto.gov/patents/process/file/efs/guidance/index.jsp
OR
http://www.uspto.gov/ebc/portal/efs/pgpub_quickstart.pdf

Any request for republication under 37 CFR 1.221(a), must be submitted via the EFS system, as a "Pre-Grant Publication" and questions or request for reconsideration of the decision, should be addressed as follows:

By mail to: Mail Stop PGPUB
Commissioner for Patents
P.O. Box 1450
Alexandria, Va. 22313-1450

Inquiries relating to this matter may be directed to Mark Polutta at (571) 272-7709.

Mark Polutta
Senior Legal Advisor
Office of Patent Legal Administration
Office of the Deputy Commissioner
for Patent Examination Policy

UNITED STATES PATENT AND TRADEMARK OFFICE

Commissioner for Patents
United States Patent and Trademark Office
P.O. Box 1450
Alexandria, VA 22313-1450
www.uspto.gov

BRIAN G. BEMBENICK
AVERY DENNISON CORPORATION
8080 NORTON PARKWAY, BLDG. 22-D
MENTOR OH 44060

MAILED

OCT 26 2011

OFFICE OF PETITIONS

In re Application of	:	
Michel Coomans	:	
Application No. 11/916,309	:	DECISION ON PETITION
Filed: December 3, 2007	:	
Attorney Docket No. AVERP3978WOUSA	:	

This is a decision on the petition under the unintentional provisions of 37 CFR 1.137(b), filed October 18, 2011, to revive the above-identified application.

The petition is **GRANTED**.

This application became abandoned for failure to timely pay the issue and publication fees on or before October 11, 2011, as required by the Notice of Allowance and Fee(s) Due mailed July 8, 2011. Accordingly, the date of abandonment of this application is October 12, 2011.

The petition satisfies the requirements of 37 CFR 1.137(b) in that petitioner has supplied (1) the reply in the form of payment of the issue fee of $1,740.00 and the publication fee of $300.00, (2) the petition fee of $1,860.00; and (3) a proper statement of unintentional delay.

Further, it is not apparent whether the person signing the instant petition was ever given a power of attorney or authorization of agent to prosecute this patent application. In accordance with 37 CFR 1.34(a), the signature appearing on the petition shall constitute a representation to the United States Patent and Trademark Office that he/she is authorized to represent the particular party in whose behalf he/she acts.

Telephone inquiries concerning this decision should be directed to the undersigned at (571) 272-7751.

This application is being referred to the Office of Data Management for processing into a patent.

/Joan Olszewski/
Joan Olszewski
Petitions Examiner
Office of Petitions

UNITED STATES PATENT AND TRADEMARK OFFICE

Commissioner for Patents
United States Patent and Trademark Office
P.O. Box 1450
Alexandria, VA 22313-1450
www.uspto.gov

WATERS TECHNOLOGIES CORPORATION
34 MAPLE STREET – LG
MILFORD MA 01757

MAILED
JAN 09 2012
OFFICE OF PETITIONS

In re Application of	:	
Marc V. Gorenstein et al	:	
Application No. 11/916,322	:	DECISION DISMISSING PETITION
Filed: June 10, 2009	:	UNDER 37 CFR 1.313(a)
Attorney Docket No. W-438-02	:	

This is a decision on the petition filed December 5, 2011, which is being treated as a petition under 37 CFR 1.313(a), requesting withdrawal of the above-identified application from issue.

The petition is **dismissed** as moot for the reasons stated below.

A review of the file record discloses that a Notice of Allowance and Fee(s) Due was mailed on November 9, 2011, with the issue fee being due on or before February 9, 2012. The issue fee in this case has not been paid.

The filing of a petition under 37 CFR 1.313(a) is unnecessary, since the mere filing of an RCE and submission will effectively withdraw an application from issue prior to payment of the issue fee. In view thereof, the petition to withdraw from issue is dismissed as involving a moot issue. *Note* MPEP §§ 706.07(h)(IX) and 1308.

Inquiries concerning this decision may be directed to Irvin Dingle at (571) 272-3210.

The matter is being referred to Technology Center AU 2857 for appropriate processing of the RCE and for consideration of the Information Disclosure Statement filed December 5, 2011.

/Irvin Dingle/
Irvin Dingle
Petitions Examiner
Office of Petitions

SPE RESPONSE FOR CERTIFICATE OF CORRECTION

Paper No.: _____

DATE : 10/27/2010

TO SPE OF : ART UNIT 1657 Weber Jon (Spe)

SUBJECT : Request for Certificate of Correction for Appl. No.: 11/916347 Patent No.: 7754457

Please respond to this request for a certificate of correction within 7 days.

FOR IFW FILES:

Please review the requested changes/corrections as shown in the **COCIN** document(s) in the IFW application image. No new matter should be introduced, nor should the scope or meaning of the claims be changed.

Please complete the response (see below) and forward the completed response to scanning using document code **COCX**.

FOR PAPER FILES:

Please review the requested changes/corrections as shown in the attached certificate of correction. Please complete this form (see below) and forward it with the file to:

Certificates of Correction Branch (CofC)
Randolph Square – 9D40-A
Palm Location 7580

Certificates of Correction Branch
703-756-1571 _____

Thank You For Your Assistance

The request for issuing the above-identified correction(s) is hereby:
Note your decision on the appropriate box.

- ☒ **Approved** — **All** changes apply.
- ☐ **Approved in Part** — Specify below which changes **do not** apply.
- ☐ **Denied** — State the reasons for denial below.

Comments: _____

/Jon P Weber/ — **SPE**

1657 — **Art Unit**

UNITED STATES PATENT AND TRADEMARK OFFICE

04 OCT 2010

Commissioner for Patents
United States Patent and Trademark Office
P.O. Box 1450
Alexandria, VA 22313-1450
www.uspto.gov

David P. Stitzel
OBLON, SPIVAK, MCCLELLAND MAIER & NEUSTADT, L.L.P.
1940 Duke Street
Alexandria, VA 22314

In re Application of	:	
Uehara, et al.	:	
Serial No.: 11/916,371	:	DECISION ON
PCT No.: PCT/JP2006/310696	:	PETITION
Int. Filing Date: 29 May 2006	:	UNDER 37 CFR 1.181
Priority Date: 03 June 2005	:	
Attorney's Docket No.: 319176US0PCT	:	
For: GAS BARRIER LAYERED PRODUCT,	:	
METHOD OF MANUFACTURING THE	:	
SAME AND PACKAGING MEDIUM USING	:	
THE SAME		

This decision is responsive to the "REQUEST TO CORRECT FILING DATE" filed 16 July 2010.

BACKGROUND

On 29 May 2006, applicants filed international application PCT/JP2006/310696, which claimed priority of an earlier Japanese application filed 03 June 2005. Accordingly, the thirty-month period for paying the basic national fee for the national stage in the United States expires at midnight on 03 December 2007.

On 03 December 2007, applicants filed the current petition along with a transmittal letter for entry into the national stage in the United States. The transmittal letter was accompanied by, *inter alia*, an application data sheet and authorization to charge the deposit account for the basic national fee. These papers were assigned Application No. 11/916,371.

On 21 May 2008, applicants filed a supplemental application data sheet and a declaration of inventorship signed by the three inventors.

On 20 October 2008, the United States Patent and Trademark mailed the "NOTICE OF ACCEPTANCE OF APPLICATION UNDER 35 U.S.C. 371 AND 37 CFR 1.495." This notice indicated that both the "DATE OF RECEIPT OF 35 U.S.C. 371(c)(1), (c)(2) and (c)(4) REQUIREMENTS" and the "DATE OF COMPLETION OF ALL 35 U.S.C. 371 REQUIREMENTS" is 03 December 2007.

On 16 July 2010, applicant filed the current request to correct the filing date.

DISCUSSION

On 21 may 2008, applicant filed a "Declaration and Power of Attorney for Patent Application Japanese Language Declaration."

37 CFR 1.69(b) states:

> Unless the text of any oath or declaration in a language other than English is in a form provided by the Patent and Trademark Office or in accordance with PCT Rule 4.17(iv), it must be accompanied by an English translation together with a statement that the translation is accurate, except that in the case of an oath or declaration filed under § 1.63, the translation may be filed in the Office no later than two months from the date applicant is notified to file the translation.

The translation provided by applicants on 21 May 2008 is not on a form provided by the Patent and Trademark Office or filed in accordance with PCT Rule 4.17(iv) during the international stage. Therefore, applicant is required to file either: (1) a new oath or declaration in compliance with 37 CFR 1.497 (a)-(b) and 1.69; or (2) provide a statement that the translation of the declaration filed 21 May 2008 is an accurate translation.

CONCLUSION

The petition to correct the filing date to 21 May 2008 is hereby **DISMISSED**.

The "NOTICE OF ACCEPTANCE OF APPLICATION UNDER 35 U.S.C. 371 AND 37 CFR 1.495" is hereby **VACATED**.

In response to this decision, applicant is required to file a proper response as indicated above. Failure to timely submit the proper response will result in **ABANDONMENT**. Any reconsideration request should include a cover letter entitled "Renewed Petition Under 37 CFR 1.181." No additional petition fee is required. Extensions of time may be obtained under 37 CFR 1.136(a).

Any further correspondence with respect to this matter may be filed electronically via EFS-Web selecting the document description "Petition for review and processing by the PCT Legal Office" or by mail addressed to Mail Stop PCT, Commissioner for Patents, Office of PCT Legal Administration, P.O. Box 1450, Alexandria, Virginia 22313-1450, with the contents of the letter marked to the attention of the Office of PCT Legal Administration.

Debra Brittingham
PCT Special Programs Examiner
Office of PCT Legal Administration

Boris Milef
PCT Legal Examiner
Office of PCT Legal Administration

Tel: (571) 272-3280

UNITED STATES PATENT AND TRADEMARK OFFICE

Commissioner for Patents
United States Patent and Trademark Office
P.O. Box 1450
Alexandria, VA 22313-1450
www.uspto.gov

David P. Stitzel
OBLON, SPIVAK, MCCLELLAND MAIER & NEUSTADT, L.L.P.
1940 Duke Street
Alexandria, VA 22314

MAILED
APR 06 2011
PCT LEGAL ADMINISTRATION

In re Application of
Uehara, et al.
Serial No.: 11/916,371
PCT No.: PCT/JP2006/310696
Int. Filing Date: 29 May 2006
Priority Date: 03 June 2005
Attorney's Docket No.: 319176US0PCT
For: GAS BARRIER LAYERED PRODUCT, METHOD OF MANUFACTURING THE SAME AND PACKAGING MEDIUM USING THE SAME

DECISION ON PETITION UNDER 37 CFR 1.181

This decision is responsive to the "RENEWED PETITION UNDER 37 C.F.R. § 1.181" filed 15 October 2010.

BACKGROUND

On 29 May 2006, applicants filed international application PCT/JP2006/310696, which claimed priority of an earlier Japanese application filed 03 June 2005. Accordingly, the thirty-month period for paying the basic national fee for the national stage in the United States expires at midnight on 03 December 2007.

On 03 December 2007, applicants filed the current petition along with a transmittal letter for entry into the national stage in the United States. The transmittal letter was accompanied by, *inter alia*, an application data sheet and authorization to charge the deposit account for the basic national fee. These papers were assigned Application No. 11/916,371.

On 21 May 2008, applicants filed a supplemental application data sheet and a declaration of inventorship signed by the three inventors.

On 20 October 2008, the United States Patent and Trademark mailed the "NOTICE OF ACCEPTANCE OF APPLICATION UNDER 35 U.S.C. 371 AND 37 CFR 1.495." This notice indicated that both the "DATE OF RECEIPT OF 35 U.S.C. 371(c)(1), (c)(2) and (c)(4) REQUIREMENTS" and the "DATE OF COMPLETION OF ALL 35 U.S.C. 371 REQUIREMENTS" is 03 December 2007.

On 16 July 2010, applicant filed a request to correct the filing date.

On 04 October 2010, a decision was mailed to applicant indicating that according to 37 CFR 1.69(b), applicant was required to provide either a (1) a new oath or declaration in compliance with 37 CFR 1.497 (a)-(b) and 1.69; or (2) provide a statement that the translation of the declaration filed 21 May 2008 is an accurate translation.

On 15 October 2010, applicant filed the instant renewed petition under 37 CFR 1.181.

DISCUSSION

The petition includes a purported statement concerning the accuracy of the translation contained in the 21 May 2008 declaration. Although the statement appears to be notarized, the statement itself is not signed.

CONCLUSION

For the reasons above, the renewed petition under 37 CFR 1.181 is **DISMISSED** without prejudice.

If reconsideration on the merits of the petition is desired, a proper response must be filed within TWO (2) MONTHS from the mail date of this decision. Failure to timely file a proper response will result in ABANDONMENT of the application. Extensions of time are available under 37 CFR 1.136(a). Any reconsideration request should include a cover letter entitled "Renewed Petition Under 37 CFR 1.181.

Any further correspondence with respect to this matter may be filed electronically via EFS-Web selecting the document description "Petition for review and processing by the PCT Legal Office" or by mail addressed to Mail Stop PCT, Commissioner for Patents, Office of PCT Legal Administration, P.O. Box 1450, Alexandria, Virginia 22313-1450, with the contents of the letter marked to the attention of the Office of PCT Legal Administration.

/Debra Brittingham/
Debra Brittingham
PCT Special Programs Examiner
Office of PCT Legal Administration

/Bryan Lin/
Bryan Lin
PCT Legal Examiner
Office of PCT Legal Administration

Tel: (571) 272-3280

UNITED STATES PATENT AND TRADEMARK OFFICE

Commissioner for Patents
United States Patent and Trademark Office
P.O. Box 1450
Alexandria, VA 22313-1450
www.uspto.gov

MAILED

DEC 27 2011

PCT LEGAL ADMINISTRATION

David P. Stitzel
OBLON, SPIVAK, MCCLELLAND MAIER & NEUSTADT, L.L.P.
1940 Duke Street
Alexandria, VA 22314

In re Application of: UEHARA et al. :
U.S. Patent No.: 7,799,396
Application No.: 11/916,371 : DECISION
PCT No.: PCT/JP2006/310696 :
Int. Filing Date: 29 May 2006 :
Priority Date: 03 June 2005 :
Attorney's Docket No.: 319176US0PCT :
For: GAS BARRIER LAYERED PRODUCT, :
METHOD OF MANUFACTURING THE :
SAME AND PACKAGING MEDIUM USING :
THE SAME

This decision is responsive to the "RENEWED PETITION UNDER 37 C.F.R. § 1.181", filed 06 June 2011, requesting that Office records reflect "May 21, 2008" as the "filing date" of the above-captioned application. The decision is **GRANTED** as follows:

The filing date of a U.S. national stage application is its international filing date. See 35 U.S.C. 363. MPEP 1893.03(b) further states:

> *37 CFR 1.496(a), first sentence, reads "International applications which have complied with the requirements of 35 U.S.C. 371(c) will be taken up for action based on the date on which such requirements were met." Thus, when the file wrapper label or PALM bib-data sheet and filing receipt are printed, the information is read from the PALM data base and the information printed in the filing date box is the date of receipt of 35 U.S.C. 371(c)(1), (c)(2) and (c)(4) requirements rather than the actual international filing date.*

Office records reflect that the date of receipt of the 35 U.S.C. 371(c)(1), (c)(2) and (c)(4) requirements is May 21, 2008. See Replacement Filing Receipt mailed herewith.

Any correction of the §371(c) date on the front page of the above-captioned patent should be by way of Certificate of Correction. See MPEP 1400.

/Debra Brittingham/
Debra Brittingham
PCT Special Programs Examiner
Office of PCT Legal Administration
Tel: (571) 272-3280

/Boris Milef/
Boris Milef
PCT Legal Examiner
Office of PCT Legal Administration

UNITED STATES PATENT AND TRADEMARK OFFICE

Commissioner for Patents
United States Patent and Trademark Office
P.O. Box 1450
Alexandria, VA 22313-1450
www.uspto.gov

Decision Date : March 15, 2012

In re Application of :

Edgar Johnson

Application No : 11916448

Filed : 20-May-2010

Attorney Docket No : 107292000120

DECISION ON REQUEST TO WITHDRAW AS ATTORNEY/AGENTOF RECORD

This is an electronic decision on the Request to Withdraw as attorney or agent of record under 37 CFR § 1.36(b), filed March 15, 2012

The request is **APPROVED.**

The request was signed by Michael Ward (registration no. 38651) on behalf of all attorneys/agents associated with Customer Number 20872 . All attorneys/agents associated with Cusotmer Number 20872 have been withdrawn.

Since there are no remaining attorneys of record, all future communications from the Office will be directed to the first named inventor or assignee that has properly made itself of record pursuant to 37 CFR 3.71, with correspondence address:

Name	U.S. Borax Inc.
Name2	
Address 1	26877 Tourney Road
Address 2	
City	Valencia
State	CA
Postal Code	91355-1847
Country	US

As a reminder, requester is required to inform the first named inventor or assignee that has properly made itself of record pursuant to 37 CFR 3.71 of the electronically processed petition.

Telephone inquiries concerning this decision should be directed to the Patent Electronic Business Center (EBC) at 866-217-9197.

Office of Petitions

Doc Code: PET.AUTO **Document Description: Petition automatically granted by EFS-Web**	PTO/SB/83 U.S. Patent and Trademark Office Department of Commerce

Electronic Petition Request	**REQUEST FOR WITHDRAWAL AS ATTORNEY OR AGENT AND CHANGE OF CORRESPONDENCE ADDRESS**
Application Number	11916448
Filing Date	20-May-2010
First Named Inventor	Edgar Johnson
Art Unit	1653
Examiner Name	SHERIDAN MACAULEY
Attorney Docket Number	107292000120
Title	PREVENTION AND TREATMENT OF OSTEOCHONDROSIS IN ANIMALS AND HUMANS

◉ Please withdraw me as attorney or agent for the above identified patent application and the practitioners of record associated with Customer Number: 20872

The reason(s) for this request are those described in 37 CFR:

10.40(b)(4)

Certifications

☒ I/We have given reasonable notice to the client, prior to the expiration of the response period, that the practitioner(s) intend to withdraw from employment

☒ I/We have delivered to the client or a duly authorized representative of the client all papers and property (including funds) to which the client is entitled

☒ I/We have notified the client of any responses that may be due and the time frame within which the client must respond

Change the correspondence address and direct all future correspondence to the first named inventor or assignee that has properly made itself of record pursuant to 37 CFR 3.71:

Name	U.S. Borax Inc.
Address	26877 Tourney Road
City	Valencia
State	CA
Postal Code	91355-1847
Country	US

I am authorized to sign on behalf of myself and all withdrawing practitioners.	
Signature	/Michael Ward/
Name	Michael Ward
Registration Number	38651

UNITED STATES PATENT AND TRADEMARK OFFICE

Commissioner for Patents
United States Patent and Trademark Office
P.O. Box 1450
Alexandria, VA 22313-1450
www.uspto.gov

MORRISON & FOERSTER, LLP
555 WEST FIFTH STREET
SUITE 3500
LOS ANGELES, CA 90013-1024

MAILED

APR 09 2012

OFFICE OF PETITIONS

In re Application of	:	
Edgar W. Johnson et al.	:	
Application No. 11/916,449	:	DECISION ON PETITION
Filed: May 21, 2008	:	TO WITHDRAW
Attorney Docket No. **BTER D999W1**	:	FROM RECORD
(107292000100	:	

This is a decision on the Request to Withdraw as attorney or agent of record under 37 CFR § 1.36(b), filed March 15, 2012.

The request is **NOT APPROVED** as moot.

A review of the file record indicates that the power of attorney to attorneys/agents associated with Customer Number 20872 has been revoked by the assignee who has intervened as provide by 37 CFR 3.71 on April 2, 2012. Accordingly, the request to withdraw under 37 CFR § 1.36(b) is moot.

All future communications from the Office will continue to be directed to the below-listed address until otherwise notified by applicant.

Telephone inquires concerning this decision should be directed to the undersigned at 571-272-4584.

/JoAnne Burke/
JoAnne Burke
Petitions Examiner
Office of Petitions

cc: Polster, Lieder, Woodruff & Lucchesi, L.C.
12412 Powerscourt Dr. Suite 200
St. Louis MO 63131-3615

UNITED STATES PATENT AND TRADEMARK OFFICE

UNITED STATES DEPARTMENT OF COMMERCE
United States Patent and Trademark Office
Address: COMMISSIONER FOR PATENTS
P.O. Box 1450
Alexandria, Virginia 22313-1450
www.uspto.gov

APPLICATION NO.	FILING DATE	FIRST NAMED INVENTOR	ATTORNEY DOCKET NO.	CONFIRMATION NO.
11/916,460	01/03/2008	Kari Vahervuo	06267.0154-00000	5518

22852 7590 11/21/2011
FINNEGAN, HENDERSON, FARABOW, GARRETT & DUNNER LLP
901 NEW YORK AVENUE, NW
WASHINGTON, DC 20001-4413

EXAMINER
MILLIGAN, ADAM C

ART UNIT	PAPER NUMBER
1612	

MAIL DATE	DELIVERY MODE
11/21/2011	PAPER

Please find below and/or attached an Office communication concerning this application or proceeding.

The time period for reply, if any, is set in the attached communication.

UNITED STATES PATENT AND TRADEMARK OFFICE

Commissioner for Patents
United States Patent and Trademark Office
P.O. Box 1450
Alexandria, VA 22313-1450
www.uspto.gov

NOV 21 2011

FINNEGAN, HENDERSON, FARABOW, GARRETT & DUNNER
LLP
901 NEW YORK AVENUE, NW
WASHINGTON DC 20001-4413

In re Application of:	:
Kari Vahervuo	: PETITION DECISION
Serial No.: 11/916,460	:
Filed: January 3, 2008	:
Attorney Docket No.: **06267.0154-00000**	

This is in response to the petition under 37 CFR § 1.181, filed August 11, 2011, requesting that the final Office action of May 12, 2011 be withdrawn.

Applicant's arguments have been accorded careful consideration but they are not persuasive for the following reasons. The petition was untimely and therefore the merits of such won't be considered. Applicant should note that 37 CFR 1.181(f) indicates that any petition not filed within two months of the mailing date of the action from which relief is requested may be dismissed as untimely, that action being the final rejection of May 12, 2011. If the applicant wants consideration after the two months they should file a petition, and corresponding petition fee for such, under 37 CFR 1.183 and ask for a suspension of the Rule 181 and ask that consideration be made later than the 2 months.

Accordingly, the petition filed under 37 CFR 1. 181 is **DISMISSED** as untimely.

Should there be any questions about this decision please contact Marianne C. Seidel, by letter addressed to Director, TC 1600, at the address listed above, or by telephone at 571-272-0584 or by facsimile sent to the general Office facsimile number, 571-273-8300.

Remy Yucel
Director, Technology Center 1600

UNITED STATES PATENT AND TRADEMARK OFFICE

Commissioner for Patents
United States Patent and Trademark Office
P.O. Box 1450
Alexandria, VA 22313-1450
www.uspto.gov

PATENT CORRESPONDENCE
ARNALL GOLDEN GREGORY LLP
171 17TH STREET NW
SUITE 2100
ATLANTA GA 30363

MAILED
NOV 25 2011
OFFICE OF PETITIONS

In re Application of
Svetlana A. Dambinova
Application No. 11/916,507
Filed: September 16, 2008
Attorney Docket Number: 23432.4

ON PETITION

This is a decision on the petition, filed November 9, 2011 under 37 CFR 1.137(b)[1], to revive the above identified application.

The petition is **GRANTED**.

This application became abandoned October 26, 2011 for failure to pay the issue fee in response to the Notice of Allowance mailed on July 25, 2011. The instant petition precedes the Notice of Abandonment filed mailed November 15, 2011.

The issue fee in the amount of $870, publication fee in the amount of $300 and the petition fee in the amount of $930 have been charged to deposit account no. 50-4667.

All other requirements of 37 CFR 1.137(b) having now been met, this matter is being referred to the Publishing Division to be processed into a patent.

Telephone inquiries concerning this matter may be directed to the undersigned Petitions Attorney at (571) 272-3212.

Patricia Faison-Ball
Senior Petitions Attorney
Office of Petitions

---

[1]Effective December 1, 1997, the provisions of 37 CFR 1.137(b) now provide that where the delay in reply was unintentional, a petition may be filed to revive an abandoned application or a lapsed patent pursuant to 37 CFR 1.137(b). A grantable petition filed under the provisions of 37 CFR 1.137(b) must be accompanied by:

(1) the required reply, unless previously filed. In a nonprovisional application abandoned for failure to prosecute, the required reply may be met by the filing of a continuing application. In an application or patent, abandoned or lapsed for failure to pay the issue fee or any portion thereof, the required reply must be the payment of the issue fee or any outstanding balance thereof.

(2) the petition fee as set forth in 37 CFR 1.17(m);

(3) a statement that the entire delay in filing the required reply from the due date for the reply until the filing of a grantable petition pursuant to 37 CFR 1.137(b) was unintentional. The Director may require additional information where there is a question whether the delay was unintentional; and

(4) any terminal disclaimer (and fee as set forth in 37 CFR 1.20(d)) required pursuant to 37 CFR 1.137(c)).

UNITED STATES PATENT AND TRADEMARK OFFICE

Commissioner for Patents
United States Patent and Trademark Office
P.O. Box 1450
Alexandria, VA 22313-1450
www.uspto.gov

GORE ENTERPRISE HOLDINGS, INC.
551 PAPER MILL ROAD
P.O. BOX 9206
NEWARK, DE 19714-9206

MAILED

AUG 2 0 2010

OFFICE OF PETITIONS

Applicant: Hiroyuki Noreida, et al.
Appl. No.: 11/916,602
International Filing Date: June 9, 2006
Title: ELECTRODE FOR ELECTRIC DOUBLE LAYER CAPACITOR AND ELECTRIC DOUBLE LAYER CAPACITOR
Attorney Docket No.: MI/298
Pub. No.: US 2009/0303658 A1
Pub. Date: December 10, 2009

This is a decision on the request for a corrected patent application publication under 37 CFR 1.221(b), received on January 11, 2010, for the above-identified application.

The request is DISMISSED.

Applicant requests that the application be republished because the patent application publication contains material errors on the front page of the publication wherein the name of the first inventor "Norieda Hiroyuki" should be listed as "Hiroyuki Norieda".

37 CFR 1.221 (b) is applicable "only when the Office makes a material mistake which is apparent from Office records.... Any request for a corrected publication or revised patent application publication other than provided as provided in paragraph (a) of this section must be filed within two months from the date of the patent application publication. This period is not extendable." A material mistake must affect the public's ability to appreciate the technical disclosure of the patent application publication, to determine the scope of the patent application publication, or to determine the scope of the provisional rights that an applicant may seek to enforce upon issuance of a patent. [1]

The error on the front page of the publication wherein the first named inventor is listed as "Norieda Hiroyuki" instead of "Hiroyuki Norieda" may be an Office error, but it is not a material Office error under 37 CFR 1.221. The listing of the inventor's name does not affect the understanding of the application. The mistake does not affect the public's ability to appreciate the technical disclosure of the patent application publication, or determine the scope of the patent

[1] Changes to Implement Eighteen-Month Publication of Patent Applications, 65 FR 57023, 57038 (Sept. 20, 2000), 1239, Off. Gaz. Pat. Office Notices 63, 75 (Oct. 10, 2000) (final rule).

application publication or determine the scope of the provisional rights that an applicant may seek to enforce upon issuance of a patent.

On September 1, 2009, a Filing Receipt was mailed by the Office, which listed the first named inventor as Norieda Hiroyuki. To avoid this type of problem in the future, applicant's representative should make request for a corrected filing receipt, prior to export of the application to the publisher.

The applicant is advised that a "request for republication of an application previously published" may be filed under 37 CFR 1.221(a). Such a request for republication "must include a copy of the application compliance with the Office's electronic filing system requirements and be accompanied by the publication fee set forth in § 1.18(d) and the processing fee set forth in § 1.17(i)." If the request for republication does not comply with the electronic filing system requirements, the republication will not take place and the publication fee set forth in § 1.18(d) will be refunded. The processing fee will be retained.

A guide for filing a request for a Pre-Grant Publication, such as a request for republication, may be found on the link below:

http://www.uspto.gov/ebc/portal/tutorials.htm

Any request for republication under 37 CFR 1.221(a), must be submitted via the EFS system, as a "Pre-Grant Publication" and questions or request for reconsideration of the decision, should be addressed as follows:

By mail to: Mail Stop PGPUB
Commissioner for Patents
P.O. Box 1450
Alexandria, Va. 22313-1450

Inquiries relating to this matter may be directed to Mark Polutta at (571) 272-7709.

Mark Polutta
Senior Legal Advisor
Office of Patent Legal Administration
Office of the Deputy Commissioner
for Patent Examination Policy

UNITED STATES PATENT AND TRADEMARK OFFICE

Commissioner for Patents
United States Patent and Trademark Office
P.O. Box 1450
Alexandria, VA 22313-1450
www.uspto.gov

HOXIE & ASSOCIATES LLC
75 MAIN STREET , SUITE 301
MILLBURN NJ 07041

MAILED

AUG 02 2010

OFFICE OF PETITIONS

In re Application of	:	
Rainer Albert, et al.	:	
Application No. 11/916,610	:	DECISION ON PETITION
Filed: July 3, 2008	:	
Attorney Docket No. NOV-21-US	:	

This is a decision on the petition under the unintentional provisions of 37 CFR 1.137(b), filed July 21, 2010, to revive the above-identified application.

The petition is **GRANTED**.
The application became abandoned for failure to reply in a timely manner to the non-final Office action mailed, August 3, 2009, which set a shortened statutory period for reply of three (3) months. No extensions of time under the provisions of 37 CFR 1.136(a) were obtained. Accordingly, the application became abandoned on November 4, 2009. The Notice of Abandonment was mailed July 12, 2010.

The petition satisfies the requirements of 37 CFR 1.137(b) in that petitioner has supplied (1) the reply in the form of an amendment, (2) the petition fee of $1,620, and (3) a proper statement of unintentional delay.

Telephone inquiries concerning this decision should be directed to Terri Johnson at (571) 272-2991.

This application is being referred to Technology Center AU 1626 for appropriate action by the Examiner in the normal course of business on the reply received.

Terri Johnson

Terri Johnson
Petitions Examiner
Office of Petitions

UNITED STATES PATENT AND TRADEMARK OFFICE

Commissioner for Patents
United States Patent and Trademark Office
P.O. Box 1450
Alexandria, VA 22313-1450
www.uspto.gov

SCHWEGMAN, LUNDBERG & WOESSNER, P.A.
P.O. BOX 2938
MINNEAPOLIS, MN 55402

MAILED

DEC 06 2010

OFFICE OF PETITIONS

In re Application of	:	
BOHNER, Marc et al.	:	
Application No. 11/916,693	:	DECISION ON PETITION
Filed: December 06, 2007	:	TO WITHDRAW
Attorney Docket No. **LUS-34024**	:	FROM RECORD
	:	

This is a decision on the Request to Withdraw as attorney or agent of record under 37 C.F.R. § 1.36(b), filed November 19, 2010.

The request is **NOT APPROVED** as moot.

A review of the file record indicates that the power of attorney to Schwegman, Lundberg & Woessner, P.A. has been revoked by the applicants of the patent application on September 13, 2010. Accordingly, the request to withdraw under 37 C.F.R. § 1.36(b) is moot.

All future communications from the Office will continue to be directed to the below-listed address until otherwise notified by applicant.

Telephone inquires concerning this decision should be directed to the undersigned at 571-272-4231.

Michelle R. Eason
Paralegal Specialist
Office of Petitions

cc: **RANKIN, HILL & CLARK LLP**
23755 LORAIN ROAD, SUITE 200
NORTH OLMSTED OH 44070
SUITE 400E
SANTA MONICA CA 90404

UNITED STATES PATENT AND TRADEMARK OFFICE

Commissioner for Patents
United States Patent and Trademark Office
P.O. Box 1450
Alexandria, VA 22313-1450
www.uspto.gov

KIMBERLY A. CHASTEEN
PO BOX 1243
YORKTOWN VA 23692

MAILED
APR 08 2011
OFFICE OF PETITIONS

In re Application of
Kathryn Leigh Smith et al.
Application No. 11/916,698
Filed: August 13, 2008
Attorney Docket No. AKERS - 18

ON PETITION

This is a decision on the petition filed March 7, 2011, to withdraw the holding of abandonment, which is being treated under 37 CFR 1.181.

The petition under 37 CFR 1.181 is **GRANTED**.

A Final Office Action was mailed March 29, 2010 which set a three month period for response. A response was filed September 29, 2010, but by Advisory Action of October 8, 2010, petitioner was advised that the response did not place the application in condition for allowance. Accordingly, a Notice of Abandonment was mailed February 9, 2011.

Petitioner argues that in response to the Final Office Action, a three month extension of time, a Request for Continued Examination (RCE) and amendment as the submission under 37 CFR 1.114,was filed September 29, 2010, prior to expiration of the maximum period obtainable for reply, thus the Notice of Abandonment was mailed in error.

A search of the USPTO records reveals that in fact, an RCE, amendment and extension of time, extending the response date to September 29, 2010 were filed. In view thereof, the response was timely and the Notice of Abandonment mailed February 9, 2011 was mailed in error .

In view thereof, the Notice of Abandonment mailed February 9, 2011 is withdrawn. No petition fee is due and none has been charged.

This matter is being referred to Technology Center 3735 for processing the RCE filed September 29, 2010.

Telephone inquiries concerning this matter may be directed to the undersigned Petitions Attorney at (571) 272-3212.

Patricia Faison-Ball

Patricia Faison-Ball
Senior Petitions Attorney
Office of Petitions

UNITED STATES PATENT AND TRADEMARK OFFICE

Commissioner for Patents
United States Patent and Trademark Office
P.O. Box 1450
Alexandria, VA 22313-1450
www.uspto.gov

FOLEY AND LARDNER LLP
SUITE 500
3000 K STREET NW
WASHINGTON, DC 20007

MAILED

AUG 27 2010

OFFICE OF PETITIONS

In re Application of
Barry Sim Hochfield, et al.
Application No. 11/916,750
Filed: December 6, 2007
Attorney Docket No. 097158-0104

DECISION ON PETITION
TO WITHDRAW
FROM RECORD

This is a decision on the Request to Withdraw as attorney or agent of record under 37 C.F.R. § 1.36(b), filed July 30, 2010.

The request is **DISMISSED** as moot.

A review of the file record indicates that the power of attorney to Foley and Lardner, LLP has been revoked by the assignee of the patent application on August 6, 2010. Accordingly, the request to withdraw under 37 C.F.R. § 1.36(b) is moot.

All future communications from the Office will continue to be directed to the address of record until otherwise notified by applicant.

Telephone inquires concerning this decision should be directed to undersigned at 571-272- 1642. All other inquiries concerning the examination or status of this application should be directed to the Technology Center.

/AMW/
April M. Wise
Petitions Examiner
Office of Petitions

UNITED STATES PATENT AND TRADEMARK OFFICE

Commissioner for Patents
United States Patent and Trademark Office
P.O. Box 1450
Alexandria, VA 22313-1450
www.uspto.gov

MAILED

MAY 02 2011

PCT LEGAL ADMINISTRATION

LAW OFFICES OF ALBERT WAI-KIT CHAN, PLLC
141-07 20TH AVENUE
WORLD PLAZA, SUITE 604
WHITESTONE NY 11357

In re Application of	:	
ANNUNZIATA	:	
Application No.: 11/916,769	:	DECISION
PCT No.: PCT/IT2006/000429	:	
Int. Filing Date: 08 June 2006	:	
Priority Date: 08 June 2005	:	
Attorney's Docket No.: 1295-PCT-US	:	
For: ANTIBODIES DIRECTED AGAINST . . .	:	
AS IMMUNOSUPPRESSANTS	:	

This decision is in response to applicant's petition to revive under 37 CFR 1.137(b)filed in the United States Patent and Trademark Office (USPTO) on 19 November 2010, which has properly been treated as a petition to withdraw the NOTIFICATION OF ABANDONMENT (Form PCT/DO/EO/909) mailed 22 July 2009. No petition fee is required. The petition fee of $810 charged to Deposit Account 501891 on 22 November 2010 has been credited to that same Deposit Account.

BACKGROUND

On 08 June 2006, applicants filed international application PCT/IT2006/000429, which designated the United States and claimed a priority date of 08 June 2005. A copy of the international application was communicated to the United States Patent and Trademark Office from the International Bureau on 14 December 2006. The thirty-month period for paying the basic national fee in the United States expired at midnight on 10 December 2007 (08 December 2007 being a Saturday).

On 06 December 2007, applicants filed a submission for entry into the national stage in the United States.

On 06 February 2008, applicant filed a declaration of inventors.

On 06 May 2008, the United States Designated/Elected Office (DO/EO/US) issued a NOTICE TO COMPLY WITH REQUIREMENTS FOR PATENT APPLICATIONS

CONTAINING NUCLEOTIDE SEQUENCE AND/OR AMINO ACID SEQUENCE DISCLOSURES (Form PCT/DO/EO/922) requiring, *inter alia*, a computer readable form of the Sequence Listing.

On 15 May 2008, applicants filed a response to the NOTICE mailed 06 May 2008.

On 22 July 2009, the DO/EO/US issued a NOTIFICATION OF ABANDONMENT (Form PCT/DO/EO/909) indicating that the application was abandoned because the USPTO had not received a disk.

On 27 July 2009, applicants filed the instant petition.

DISCUSSION

The petition has properly been treated as a petition to withdraw the NOTIFICATION OF ABANDONMENT (Form PCT/DO/EO/909) mailed 22 July 2009. As noted by applicant, a computer readable form of the Sequence Listing was filed electronically on 15 May 2008 as a .txt file. This file is sufficient as a computer readable form of the Sequence Listing. Accordingly, the NOTIFICATION OF ABANDONMENT mailed 22 July 2009 is hereby VACATED.

CONCLUSION

For the reasons set forth above, the petition to withdraw the holding of abandonment is **GRANTED**.

For the reasons set forth above, the NOTIFICATION OF ABANDONMENT mailed 22 July 2009 is hereby VACATED.

This application is being forwarded to the National Stage Processing Branch of the Office of PCT Operations to continue national stage processing of the application in accordance with this decision.

/Daniel Stemmer/
Daniel Stemmer
PCT Legal Examiner
PCT Legal Affairs
Office of Patent Cooperation Treaty
Legal Administration
Telephone: (571) 272-3301

UNITED STATES PATENT AND TRADEMARK OFFICE

Commissioner for Patents
United States Patent and Trademark Office
P.O. Box 1450
Alexandria, VA 22313-1450
www.uspto.gov

Browdy and Neimark, PLLC
1625 K Street, N.W.
Suite 1100
Washington, DC 20006

MAILED

JUN 28 2011

OFFICE OF PETITIONS

In re Application of :
Giorgio Girondi :
Application No. 11/916,772 : NOTICE
Filed: December 6, 2007 :
Attorney Docket No. GIRONDI=17 :

This is a Notice regarding your request for acceptance of a fee deficiency submission under 37 CFR 1.28, filed on May 10, 2011.

The Office no longer investigates or rejects original or reissue applications under 37 CFR 1.56. 1098 Off. Gaz. Pat. Office 502 (January 3, 1989). Therefore, nothing in this Notice is intended to imply that an investigation was done.

Your fee deficiency submission under 37 CFR 1.28 is hereby **ACCEPTED**. Therefore, status as a small entity has been removed and any future fee(s) submitted must be paid at the large entity rate.

Inquiries related to this communication should be directed to the undersigned at (571) 272-3226.

Andrea Smith
Petitions Examiner
Office of Petitions

UNITED STATES PATENT AND TRADEMARK OFFICE

Commissioner for Patents
United States Patent and Trademark Office
P.O. Box 1450
Alexandria, VA 22313-1450
www.uspto.gov

Paper No.

MAILED
NOV 03 2011
OFFICE OF PETITIONS

MARSHALL, GERSTEIN & BORUN LLP
233 SOUTH WACKER DRIVE
6300 WILLIS TOWER
CHICAGO IL 60606-6357

In re Patent No. 7,844,664	:	
Issue Date: November 30, 2010	:	
Application No. 11/916,790	:	ON PETITION
Filed: December 6, 2007	:	
Attorney Docket No. 30952/43493	:	
	:	

This is in response to the REQUEST TO CORRECT ASSIGNEE UNDER 37 CFR 3.81(b) filed October 19, 2011, which is properly treated as a request under 37 CFR 3.81(b) to correct the name of the assignee on the front page of the above-identified patent by way of a Certificate of Correction.

The request is **GRANTED.**

Pursuant to the issue fee transmittal filed October 19, 2010, the patent issued in the name of assignees "Huawei Technologies Co., Ltd." and "Tencent Technology (Shenzhen) Company Ltd." Patentee files this request, requesting that the name of the assignee be corrected to only "Tencent Technology (Shenzhen) Company Ltd" and submits a certificate of correction for this purpose.

Patentee's evidence and Office records show that the change of name for the assignee of the above-identified application to "Tencent Technology (Shenzhen) Company Ltd." was recorded on January 16, 2008. The recording of the assignment (Reel/Frame 020370/0946) occurred before issuance of the patent on November 30, 2010.

Receipt of the required $100 certificate of correction fee and the required $130 processing fee is acknowledged.

Telephone inquiries concerning this decision may be directed to the undersigned at (571) 272-3219. Inquiries regarding the

issuance of a certificate of correction should be directed to the Certificate of Correction Branch at (571) 272-4200.

The Certificates of Correction Branch has been notified of this decision granting the petition under 37 CFR 3.81(b) and directing issuance of the requested Certificate of Correction to correct the Assignee data.

Nancy Johnson
Senior Petitions Attorney
Office of Petitions

UNITED STATES PATENT AND TRADEMARK OFFICE

UNITED STATES DEPARTMENT OF COMMERCE
United States Patent and Trademark Office
Address: COMMISSIONER FOR PATENTS
P.O. Box 1450
Alexandria, Virginia 22313-1450
www.uspto.gov

APPLICATION NO.	FILING DATE	FIRST NAMED INVENTOR	ATTORNEY DOCKET NO.	CONFIRMATION NO.
11/916,795	05/29/2008	Emil A.J. Wiesert-Linhart	27656/43535	9362

7590 02/28/2011
MARSHALL, GERSTEIN & BORUN LLP
233 SOUTH WACKER DRIVE
6300 WILLIS TOWER
CHICAGO, IL 60606-6357

EXAMINER
MCCAIG, BRIAN A

ART UNIT	PAPER NUMBER
1774	

NOTIFICATION DATE	DELIVERY MODE
02/28/2011	ELECTRONIC

DECISION DISMISSING PETITION UNDER 37 CFR 1.138(d)

The declaration of express abandonment will not be recognized

This is in response to the petition under 37 CFR 1.138(d), requesting for a refund of any previously paid search fee and excess claims fee in the above-identified application.

The petition is dismissed.

The express abandonment will **not** be recognized for the reason(s) indicated below:

1. ☐ The petition was not filed in sufficient time to permit the appropriate officials to recognize the abandonment before an examination has been made of the application. See 37 CFR 1.138(d).
2. ☐ The petition was not signed by a party authorized by 37 CFR 1.33(b)(1), (3) or (4).
3. ☑ The application is not an application filed under 35 U.S.C. 111(a) on or after December 8, 2004.
4. ☐ The petition for express abandonment under 1.138(d) is dismissed because the applicant did not pay any search fee and excess claims fees in the above-identified application.

Telephone inquiries should be directed to the Office of Data Management at (571) 272-4200.

Mimi Farmer

Patent Publication Branch
Office of Data Management

UNITED STATES PATENT AND TRADEMARK OFFICE

Commissioner for Patents
United States Patent and Trademark Office
P.O. Box 1450
Alexandria, VA 22313-1450
www.uspto.gov

LADAS & PARRY LLP
224 SOUTH MICHIGAN AVENUE, SUITE 1600
CHICAGO, IL 60604

MAILED
JUL 20 2011
OFFICE OF PETITIONS

In re Application of	:	
Chonghui HUANG	:	
Application No. 11/916,836	:	DECISION GRANTING PETITION
Filed: December 7, 2007	:	UNDER 37 CFR 1.313(c)(2)
Attorney Docket No. **CU6258 WWP**	:	

This is a decision on the petition under 37 CFR 1.313(c)(2); filed July 18, 2011, to withdraw the above-identified application from issue after payment of the issue fee.

The petition is **GRANTED**.

The above-identified application is withdrawn from issue for consideration of a submission under 37 CFR 1.114 (request for continued examination). *See* 37 CFR 1.313(c)(2).

Petitioner is advised that the issue fee paid on July 1, 2011 cannot be refunded. If, however, this application is again allowed, petitioner may request that it be applied towards the issue fee required by the new Notice of Allowance.[1]

Telephone inquiries should be directed to the undersigned at (571) 272-7253.

This application is being referred to Technology Center AU 2617 for processing of the request for continued examination under 37 CFR 1.114 and for consideration of the concurrently filed information disclosure statement.

/Monica A. Graves/
Petitions Examiner, Office of Petitions

---

[1] *The request to apply the issue fee to the new Notice may be satisfied by completing and returning the new Part B – Fee(s) Transmittal Form (along with any balance due at the time of submission). Petitioner is advised that the Issue Fee Transmittal Form* ***must*** *be completed and timely submitted to avoid abandonment of the application.*

UNITED STATES PATENT AND TRADEMARK OFFICE

Commissioner for Patents
United States Patent and Trademark Office
P.O. Box 1450
Alexandria, VA 22313-1450
www.uspto.gov

MAILED
JUN 16 2011
OFFICE OF PETITIONS

COOLEY LLP
ATTN: PATENT GROUP
SUITE 1100
777 - 6TH STREET, NW
WASHINGTON, DC 20001

In re Application of	:	
SHENOY, Bhami C. et al.	:	
Application No. 11/916,858	:	DECISION ON PETITION
Filed: July 11, 2008	:	TO WITHDRAW
Attorney Docket No. **ALTH-005/01US 307255-2046**	:	FROM RECORD

This is a decision on the Request to Withdraw as attorney or agent of record under 37 C.F.R. § 1.36(b), filed May 09, 2011.

The request is **NOT APPROVED** as moot.

A review of the file record indicates that the power of attorney to Cooley LLP has been revoked by the assignee of the patent application on May 19, 2011. Accordingly, the request to withdraw under 37 C.F.R. § 1.36(b) is moot.

All future communications from the Office will continue to be directed to the new address of record until otherwise notified by applicant.

Telephone inquires concerning this decision should be directed to the undersigned at 571-272-4231.

Michelle R. Eason
Paralegal Specialist
Office of Petitions

UNITED STATES PATENT AND TRADEMARK OFFICE

Commissioner for Patents
United States Patent and Trademark Office
P.O. Box 1450
Alexandria, VA 22313-1450
www.uspto.gov

MAILED

APR 28 2011

OFFICE OF PETITIONS

ALSTON & BIRD LLP
BANK OF AMERICA PLAZA
101 SOUTH TRYON STREET, SUITE 4000
CHARLOTTE, NC 28280-4000

In re Application of	:	
Marc Beverini, et al.	:	
Application No. 11/916,903	:	ON PETITION
Filed: December 7, 2007	:	
Attorney Docket No.: 047578/338002	:	

This is a decision in response to the petition under 37 CFR 1.137(b), filed March 1, 2011, to revive the above-identified application.

The petition is **GRANTED**.

The application became abandoned on for failure to timely file a reply within the meaning of 37 CFR 1.113 to the final Office action, mailed August 26, 2010, which set a shortened statutory period for reply of three (3) months. In view of the extension of time for two months on January 24, 2011, the application became abandoned on January 27, 2011. This decision precedes the mailing of a Notice of Abandonment. On March 1, 2011, the present petition was filed.

The petition satisfies the requirements of 37 CFR 1.137(b) in that petitioner has supplied (1) the reply in the form of a Request for Continued Examination (RCE), including the fee of $810 and submission required under 37 CFR 1.114; (2) the petition fee of $1,620; and (3) an adequate statement of unintentional delay.

Extensions of time under 37 CFR 1.136 are available only if asked for prior to or with the response. In no case, however, may an applicant respond later than the maximum time period set by statute. Accordingly, if the question of abandonment arises when the provisions of 37 CFR 1.136 can no longer be used, then the application is abandoned when the unextended time for response has expired. Since, no extension of time fees are due on a petition for revival, petitioner is entitled to a refund of the $1,110 extension fees included with this petition.

Any request for refund must included a copy of this decision and be mailed to Mail Stop 16, Director of the U.S. Patent and Trademark Office, P. O. Box 1450, Alexandria, VA 22313-1450 or faxed to the Customer Service Help Desk at (571) 273-6500.

This application is being referred to Technology Center AU 1781 for processing of the RCE and for appropriate action by the Examiner in the normal course of business on the amendment submitted in accordance with 37 CFR 1.114.

Telephone inquiries concerning this decision should be directed to the undersigned at (571) 272-3204. Inquiries relating to further prosecution should be directed to the Technology Center.

/SDB/

Sherry D. Brinkley
Petitions Examiner
Office of Petitions

PTO/SB/20PCT-KR (06-10)
Approved for use through 01/31/2012. OMB 0651-0058
U.S. Patent and Trademark Office; U. S. DEPARTMENT OF COMMERCE
Under the Paperwork Reduction Act of 1995, no persons are required to respond to a collection of information unless it displays a valid OMB control number.

REQUEST FOR PARTICIPATION IN THE PATENT COOPERATION TREATY - PATENT PROSECUTION HIGHWAY (PCT-PPH) PILOT PROGRAM BETWEEN THE KOREAN INTELLECTUAL PROPERTY OFFICE (KIPO) AND THE USPTO

Application No:	11/916,954	Filing date:	December 7, 2007
First Named Inventor:	HEO, SOON YEONG		
Title of the Invention:	A SILVER PASTE FOR FORMING CONDUCTIVE LAYERS		

THIS REQUEST FOR PARTICIPATION IN THE PCT-PPH PILOT PROGRAM ALONG WITH THE REQUIRED DOCUMENTS MUST BE SUBMITTED VIA EFS-WEB. INFORMATION REGARDING EFS-WEB IS AVAILABLE AT HTTP://WWW.USPTO.GOV/EBC/EFS_HELP.HTML

APPLICANT HEREBY REQUESTS PARTICIPATION IN THE PCT-PPH PROGRAM AND PETITIONS TO MAKE THE ABOVE-IDENTIFIED APPLICATION SPECIAL UNDER THE PCT-PPH PROGRAM.

The above-identified application is (1) a national stage entry of the corresponding PCT application, or (2) a national stage entry of another PCT application which claims priority to the corresponding PCT application, or (3) a national application that claims domestic/ foreign priority to the corresponding PCT application, or (4) a national application which forms the basis for the priority claim in the corresponding PCT application, or (5) a continuing application of a U.S. application that satisfies one of (1) to (4) above, or (6) a U.S. application that claims domestic benefit to a U.S. provisional application which forms the basis for the priority claim in the corresponding PCT application.

The corresponding PCT application number(s) is/are: PCT/KR2007/002533

The international date of the corresponding PCT application(s) is/are: 25 MAY 2007

I. List of Required Documents:

a. **A copy of the latest international work product (WO/ISA, WO/IPEA, or IPER) in the above–identified corresponding PCT application(s)**

- [x] Is attached.
- [ ] Is not attached because the document is already in the U.S. application.

b. **A copy of all claims which were indicated as having novelty, inventive step and industrial applicability in the above-identified corresponding PCT application(s).**

- [x] Is attached.
- [ ] Is not attached because the document is already in the U.S. application.

c. **English translations of the documents in a. and b. above are attached (if the documents are not in the English language). A statement that the English translation is accurate is attached for the document in b. above.**

This collection of information is required by 35 U.S.C. 119, 37 CFR 1.55, and 37 CFR 1.102(d). The information is required to obtain or retain a benefit by the public, which is to file (and by the USPTO to process) an application. Confidentiality is governed by 35 U.S.C. 122 and 37 CFR 1.11 and 1.14. This collection is estimated to take 2 hours to complete, including gathering, preparing, and submitting the completed application form to the USPTO. Time will vary depending upon the individual case. Any comments on the amount of time you require to complete this form and/or suggestions for reducing this burden should be sent to the Chief Information Officer, U.S. Patent and Trademark Office, U.S. Department of Commerce, P.O. Box 1450, Alexandria, VA 22313-1450. DO NOT SEND FEES OR COMPLETED FORMS TO THIS ADDRESS.

Approved for use through 01/31/2012. OMB 0651-0058
U.S.Patent and Trademark Office; U.S. DEPARTMENT OF COMMERCE
Under the Paperwork Reduction Act of 1995, no persons are required to respond to a collection of information unless it displays a valid OMB control number.

REQUEST FOR PARTICIPATION IN THE PCT-PPH PILOT PROGRAM BETWEEN THE KIPO AND THE USPTO

(continued)

Application No.:	11/916954
First Named Inventor:	HEO, SOON YEONG

d. **(1) An information disclosure statement listing the documents cited in the international work products (ISR, WO/ISA, WO/IPEA, IPER) of the corresponding PCT application.**

☐ Is attached

☒ Has already been filed in the above-identified U.S. application on January 25, 2010

(2) Copies of all documents (except) for U.S. patents or U.S. patent application publications)

☐ Are attached.

Have already been filed in the above-identified U.S. application on _____

II. Claims Correspondence Table:

Claims in US Application	Patentable Claims in the corresponding PCT Application	Explanation regarding the correspondence
1-8	1-8	The claims are identical.

III. All the claims in the US application sufficiently correspond to the patentable claims in the corresponding PCT application.

Signature /Elizabeth E. Kim/	Date August 28, 2010
Name (Print/Typed) Elizabeth E. Kim	Registration Number 43334

Privacy Act Statement

The **Privacy Act of 1974 (P.L. 93-579)** requires that you be given certain information in connection with your submission of the attached form related to a patent application or patent. Accordingly, pursuant to the requirements of the Act, please be advised that: (1) the general authority for the collection of this information is 35 U.S.C. 2(b)(2); (2) furnishing of the information solicited is voluntary; and (3) the principal purpose for which the information is used by the U.S. Patent and Trademark Office is to process and/or examine your submission related to a patent application or patent. If you do not furnish the requested information, the U.S. Patent and Trademark Office may not be able to process and/or examine your submission, which may result in termination of proceedings or abandonment of the application or expiration of the patent.

The information provided by you in this form will be subject to the following routine uses:

1. The information on this form will be treated confidentially to the extent allowed under the Freedom of Information Act (5 U.S.C. 552) and the Privacy Act (5 U.S.C 552a). Records from this system of records may be disclosed to the Department of Justice to determine whether disclosure of these records is required by the Freedom of Information Act.
2. A record from this system of records may be disclosed, as a routine use, in the course of presenting evidence to a court, magistrate, or administrative tribunal, including disclosures to opposing counsel in the course of settlement negotiations.
3. A record in this system of records may be disclosed, as a routine use, to a Member of Congress submitting a request involving an individual, to whom the record pertains, when the individual has requested assistance from the Member with respect to the subject matter of the record.
4. A record in this system of records may be disclosed, as a routine use, to a contractor of the Agency having need for the information in order to perform a contract. Recipients of information shall be required to comply with the requirements of the Privacy Act of 1974, as amended, pursuant to 5 U.S.C. 552a(m).
5. A record related to an International Application filed under the Patent Cooperation Treaty in this system of records may be disclosed, as a routine use, to the International Bureau of the World Intellectual Property Organization, pursuant to the Patent Cooperation Treaty.
6. A record in this system of records may be disclosed, as a routine use, to another federal agency for purposes of National Security review (35 U.S.C. 181) and for review pursuant to the Atomic Energy Act (42 U.S.C. 218(c)).
7. A record from this system of records may be disclosed, as a routine use, to the Administrator, General Services, or his/her designee, during an inspection of records conducted by GSA as part of that agency's responsibility to recommend improvements in records management practices and programs, under authority of 44 U.S.C. 2904 and 2906. Such disclosure shall be made in accordance with the GSA regulations governing inspection of records for this purpose, and any other relevant (*i.e.*, GSA or Commerce) directive. Such disclosure shall not be used to make determinations about individuals.
8. A record from this system of records may be disclosed, as a routine use, to the public after either publication of the application pursuant to 35 U.S.C. 122(b) or issuance of a patent pursuant to 35 U.S.C. 151. Further, a record may be disclosed, subject to the limitations of 37 CFR 1.14, as a routine use, to the public if the record was filed in an application which became abandoned or in which the proceedings were terminated and which application is referenced by either a published application, an application open to public inspection or an issued patent.
9. A record from this system of records may be disclosed, as a routine use, to a Federal, State, or local law enforcement agency, if the USPTO becomes aware of a violation or potential violation of law or regulation.

PATENT COOPERATION TREATY

From the
INTERNATIONAL SEARCHING AUTHORITY

To:
SHINSEGI PATENT LAW FIRM

3rd Floor, Yoong-jun Bldg., 829-6 Yeoksam-dong, Gangnam-ku Seoul 135-936 Republic of Korea

PCT

WRITTEN OPINION OF THE INTERNATIONAL SEARCHING AUTHORITY

(PCT Rule 43bis.1)

Date of mailing *(day/month/year)*	**25 OCTOBER 2007 (25.10.2007)**
Applicant's or agent's file reference LBM145-07	**FOR FURTHER ACTION** See paragraph 2 below

International application No.	International filing date *(day/month/year)*	Priority date *(day/month/year)*
PCT/KR2007/002533	**25 MAY 2007 (25.05.2007)**	30 JANUARY 2007 (30.01.2007)

International Patent Classification (IPC) or both national classification and IPC

H01B 1/22(2006.01)i

Applicant

EXAX INC. et al

1. This opinion contains indications relating to the following items:

- [x] Box No. I Basis of the opinion
- [ ] Box No. II Priority
- [ ] Box No. III Non-establishment of opinion with regard to novelty, inventive step and industrial applicability
- [ ] Box No. IV Lack of unity of invention
- [x] Box No. V Reasoned statement under Rule 43bis.1(a)(i) with regard to novelty, inventive step or industrial applicability; citations and explanations supporting such statement
- [ ] Box No. VI Certain documents cited
- [ ] Box No. VII Certain defects in the international application
- [ ] Box No. VIII Certain observations on the international application

2. **FURTHER ACTION**
If a demand for international preliminary examination is made, this opinion will be considered to be a written opinion of the International Preliminary Examining Authority ("IPEA") except that this does not apply where the applicant chooses an Authority other than this one to be the IPEA and the chosen IPEA has notified the International Bureau under Rule 66.1bis(b) that written opinions of this International Searching Authority will not be so considered.

If this opinion is, as provided above, considered to be a written opinion of the IPEA, the applicant is invited to submit to the IPEA a written reply together, where appropriate, with amendments, before the expiration of 3 months from the date of mailing of Form PCT/ISA/220 or before the expiration of 22 months from the priority date, whichever expires later.
For further options, see Form PCT/ISA/220.

3. For further details, see notes to Form PCT/ISA/220.

Name and mailing address of the ISA/KR	Date of completion of this opinion	Authorized officer
Korean Intellectual Property Office 920 Dunsan-dong, Seo-gu, Daejeon 302-701, Republic of Korea Facsimile No. 82-42-472-7140	25 OCTOBER 2007 (25.10.2007)	JUNG Sug Woo Telephone No.82-42-481-839(

WRITTEN OPINION OF THE INTERNATIONAL SEARCHING AUTHORITY

International application No.
PCT/KR2007/002533

Box No. I Basis of this opinion

1. With regard to the **language**, this opinion has been established on the basis of :

   ☒ the international application in the language in which it was filed

   ☐ a translation of the international application into _____ , which is the language of a translation furnished for the purposes of international search (Rules 12.3(a) and 23.1(b))

2. ☐ This opinion has been established taking into account the **rectification of an obvious mistake** authorized by or notified to this Authority under Rule 91 (Rule 43*bis*.1(a))

3. With regard to any **nucleotide and/or amino acid sequence** disclosed in the international application, this opinion has been established on the basis of:

   a. type of material
   - ☐ a sequence listing
   - ☐ table(s) related to the sequence listing

   b. format of material
   - ☐ on paper
   - ☐ in electronic form

   c. time of filing/furnishing
   - ☐ contained in the international application as filed.
   - ☐ filed together with the international application in electronic form.
   - ☐ furnished subsequently to this Authority for the purposes of search.

4. ☐ In addition, in the case that more than one version or copy of a sequence listing and/or table relating thereto has been filed or furnished, the required statements that the information in the subsequent or additioanl copies is identical to that in the application as filed or does not go beyond the application as filed, as appropriate, were furnished.

5. Additional comments:

WRITTEN OPINION OF THE INTERNATIONAL SEARCHING AUTHORITY

International application No.
PCT/KR2007/002533

Box No. V Reasoned statement under Rule 43bis.1(a)(i) with regard to novelty, inventive step or industrial applicability; citations and explanations supporting such statement

1. Statement

Novelty (N)	Claims	1-8	YES
	Claims	None	NO
Inventive step (IS)	Claims	1-8	YES
	Claims	None	NO
Industrial applicability (IA)	Claims	1-8	YES
	Claims	None	NO

2. Citations and explanations :

Reference is made to the following documents:

D1: KR 10-1997-0076901 A

1. Novelty & Inventive Step

The present application refers to a silver paste for forming an electrically conductive layer.

The problem to be solved by the present application is to provide a silver paste for forming an electrically conductive layer having excellent electrically conductivity, being economically prepared, having high adaptability to various sites, and forming an electrically conductive layer through metallization at a relatively low temperature.

The solution is to provide a silver paste for forming electrically conductive pattern comprising: 0.1 to 60 wt.% of a silver C0 to C12 aliphatic carboxylate; 1 to 80 wt.% of silver powder; 0.1 to 15 wt.% of a binder; and a residual organic solvent.

The closest prior art may be represented by D1 that discloses an electrolyte paste composition comprising: 60 to 80 wt.% of silver powder; 0.1 to 2 wt.% of palladium powder; 1 to 10 wt.% of inorganic binder; and 8 to 38.9 wt.% of organic binder, wherein organic binder comprises 10 to 25 wt.% of cellulose acetate butyrate, 3.2 to 13 wt.% of additives, and 62 to 86.8 wt.% of solvents, in which additives are dihydrate caster oil and disperbyk humid dispersive agent, and solvents are mixed with at least one of toluene, methylisobutylketone, ethoxyethoxyethyl acetate, buthoxyethyl acetate.

However D1 does not suggest a silver C0 to C12 aliphatic carboxylate corresponding to the technical feature of this invention, and the feature is neither known from, nor rendered obvious by, the available prior art.

Thus the present application is considered to be novel and to involve an inventive step.

Therefore, the present application meets the criteria set out in Article 33(2)-(3) PCT.

(Continued on Supplemental Box.)

Supplemental Box

In case **the space in any of the preceding boxes is not sufficient.**
Continuation of :

Box V.

2. Industrial Applicability

There is no reason for denying industrial applicability of the present application. Consequently, the present application appears to meet the requirements of Article 33(4) PCT.

Claims

[1] A silver paste for forming electrically conductive pattern comprising 0.1 to 60 wt% of a silver C0 to C12 aliphatic carboxylate; 1 to 80 wt% of silver powder; 0.1 to 15 wt% of a binder; and a residual organic solvent.

[2] A silver paste for forming an electrically conductive layer according to claim 1, wherein the silver powder has an average particle diameter in the range of 0.1 to 10 micrometers and the silver aliphatic carboxylate is selected from the group consisting of silver citrate, silver oxalate, silver formate and silver malate.

[3] A silver paste for forming a electrically conductive layer according to claim 1 or claim 2, wherein the organic solvent is selected from the group consisting of a vehicle for modulating viscosity, a reactive organic solvent and a mixture thereof.

[4] A silver paste for forming an electrically conductive layer according to claim 3, wherein the vehicle for modulating viscosity is C1 to C4 aliphatic alcohol having a mono- to tri-valent hydroxyl group, C2 to C8 alkyl ether of the aliphatic alcohol or C2 to C8 alkyl ester of the aliphatic alcohol.

[5] A silver paste for forming an electrically conductive layer according to claim 3, wherein the reactive organic solvent is selected from the group consisting of an amine substituted by one or more C1 to C6 aliphatic group and a linear or branched C1 to C16 aliphatic thiol.

[6] A silver paste for forming a electrically conductive layer according to claim 3, wherein the reactive organic solvent is selected from the group consisting of methylamine, ethylamine, isopropylamine, monoethanolamine, diethanolamine, triethanolamine and a mixture thereof and the vehicle for modulating viscosity is selected from the group consisting of butylcarbitol acetate, butylcarbitol, ethylcarbitol, ethylcarbitol acetate, terpineol, texanol, menthanol, isoamyl acetate, methanol, ethanol and a mixture thereof.

[7] A silver paste for forming an electrically conductive layer according to claim 6, wherein the binder is thermo-setting and 1 to 13 w% of the total paste.

[8] A silver paste for forming a electrically conductive layer according to claim 7, wherein the metallization temperature of the silver paste is 80°C to 280°C.

PATENT COOPERATION TREATY

PCT

INTERNATIONAL PRELIMINARY REPORT ON PATENTABILITY

(Chapter I of the Patent Cooperation Treaty)

(PCT Rule 44*bis*)

Applicant's or agent's file reference LBM145-07	**FOR FURTHER ACTION**	See item 4 below
International application No. PCT/KR2007/002533	International filing date *(day/month/year)* 25 May 2007 (25.05.2007)	Priority date *(day/month/year)* 30 January 2007 (30.01.2007)
International Patent Classification (8th edition unless older edition indicated) See relevant information in Form PCT/ISA/237		
Applicant EXAX INC.		

1. This international preliminary report on patentability (Chapter I) is issued by the International Bureau on behalf of the International Searching Authority under Rule 44 *bis*.1(a).

2. This REPORT consists of a total of 5 sheets, including this cover sheet.

   In the attached sheets, any reference to the written opinion of the International Searching Authority should be read as a reference to the international preliminary report on patentability (Chapter I) instead.

3. This report contains indications relating to the following items:

   - [x] Box No. I — Basis of the report
   - [ ] Box No. II — Priority
   - [ ] Box No. III — Non-establishment of opinion with regard to novelty, inventive step and industrial applicability
   - [ ] Box No. IV — Lack of unity of invention
   - [x] Box No. V — Reasoned statement under Article 35(2) with regard to novelty, inventive step or industrial applicability; citations and explanations supporting such statement
   - [ ] Box No. VI — Certain documents cited
   - [ ] Box No. VII — Certain defects in the international application
   - [ ] Box No. VIII — Certain observations on the international application

4. The International Bureau will communicate this report to designated Offices in accordance with Rules 44*bis*.3(c) and 93*bis*.1 but not, except where the applicant makes an express request under Article 23(2), before the expiration of 30 months from the priority date (Rule 44*bis* .2).

	Date of issuance of this report 04 August 2009 (04.08.2009)
The International Bureau of WIPO 34, chemin des Colombettes 1211 Geneva 20, Switzerland Facsimile No. +41 22 338 82 70	Authorized officer Philippe Becamel e-mail: pt12.pct@wipo.int

PATENT COOPERATION TREATY

From the
INTERNATIONAL SEARCHING AUTHORITY

To:
SHINSEGI PATENT LAW FIRM

3rd Floor, Yoong-jun Bldg., 829-6 Yeoksam-dong, Gangnam-ku Seoul 135-936 Republic of Korea

PCT

WRITTEN OPINION OF THE INTERNATIONAL SEARCHING AUTHORITY

(PCT Rule 43bis.1)

Date of mailing *(day/month/year)*	**25 OCTOBER 2007 (25.10.2007)**
Applicant's or agent's file reference LBM145-07	**FOR FURTHER ACTION** See paragraph 2 below

International application No.	International filing date *(day/month/year)*	Priority date *(day/month/year)*
PCT/KR2007/002533	**25 MAY 2007 (25.05.2007)**	30 JANUARY 2007 (30.01.2007)

International Patent Classification (IPC) or both national classification and IPC

H01B 1/22(2006.01)i

Applicant

EXAX INC. et al

1. This opinion contains indications relating to the following items:

- [x] Box No. I Basis of the opinion
- [ ] Box No. II Priority
- [ ] Box No. III Non-establishment of opinion with regard to novelty, inventive step and industrial applicability
- [ ] Box No. IV Lack of unity of invention
- [x] Box No. V Reasoned statement under Rule 43bis.1(a)(i) with regard to novelty, inventive step or industrial applicability; citations and explanations supporting such statement
- [ ] Box No. VI Certain documents cited
- [ ] Box No. VII Certain defects in the international application
- [ ] Box No. VIII Certain observations on the international application

2. **FURTHER ACTION**
If a demand for international preliminary examination is made, this opinion will be considered to be a written opinion of the International Preliminary Examining Authority ("IPEA") except that this does not apply where the applicant chooses an Authority other than this one to be the IPEA and the chosen IPEA has notified the International Bureau under Rule 66.1bis(b) that written opinions of this International Searching Authority will not be so considered.

If this opinion is, as provided above, considered to be a written opinion of the IPEA, the applicant is invited to submit to the IPEA a written reply together, where appropriate, with amendments, before the expiration of 3 months from the date of mailing of Form PCT/ISA/220 or before the expiration of 22 months from the priority date, whichever expires later.
For further options, see Form PCT/ISA/220.

3. For further details, see notes to Form PCT/ISA/220.

Name and mailing address of the ISA/KR	Date of completion of this opinion	Authorized officer
Korean Intellectual Property Office 920 Dunsan-dong, Seo-gu, Daejeon 302-701, Republic of Korea Facsimile No. 82-42-472-7140	25 OCTOBER 2007 (25.10.2007)	JUNG Sug Woo Telephone No.82-42-481-839(

WRITTEN OPINION OF THE INTERNATIONAL SEARCHING AUTHORITY

International application No.
PCT/KR2007/002533

Box No. I Basis of this opinion

1. With regard to the **language**, this opinion has been established on the basis of :

   ☒ the international application in the language in which it was filed

   ☐ a translation of the international application into _____ , which is the language of a translation furnished for the purposes of international search (Rules 12.3(a) and 23.1(b))

2. ☐ This opinion has been established taking into account the **rectification of an obvious mistake** authorized by or notified to this Authority under Rule 91 (Rule 43*bis*.1(a))

3. With regard to any **nucleotide and/or amino acid sequence** disclosed in the international application, this opinion has been established on the basis of:

   a. type of material
   - ☐ a sequence listing
   - ☐ table(s) related to the sequence listing

   b. format of material
   - ☐ on paper
   - ☐ in electronic form

   c. time of filing/furnishing
   - ☐ contained in the international application as filed.
   - ☐ filed together with the international application in electronic form.
   - ☐ furnished subsequently to this Authority for the purposes of search.

4. ☐ In addition, in the case that more than one version or copy of a sequence listing and/or table relating thereto has been filed or furnished, the required statements that the information in the subsequent or additioanl copies is identical to that in the application as filed or does not go beyond the application as filed, as appropriate, were furnished.

5. Additional comments:

WRITTEN OPINION OF THE INTERNATIONAL SEARCHING AUTHORITY

International application No.
PCT/KR2007/002533

Box No. V Reasoned statement under Rule 43bis.1(a)(i) with regard to novelty, inventive step or industrial applicability; citations and explanations supporting such statement

1. Statement

Novelty (N)	Claims	1-8	YES
	Claims	None	NO
Inventive step (IS)	Claims	1-8	YES
	Claims	None	NO
Industrial applicability (IA)	Claims	1-8	YES
	Claims	None	NO

2. Citations and explanations :

Reference is made to the following documents:

D1: KR 10-1997-0076901 A

1. Novelty & Inventive Step

The present application refers to a silver paste for forming an electrically conductive layer.

The problem to be solved by the present application is to provide a silver paste for forming an electrically conductive layer having excellent electrically conductivity, being economically prepared, having high adaptability to various sites, and forming an electrically conductive layer through metallization at a relatively low temperature.

The solution is to provide a silver paste for forming electrically conductive pattern comprising: 0.1 to 60 wt.% of a silver C0 to C12 aliphatic carboxylate; 1 to 80 wt.% of silver powder; 0.1 to 15 wt.% of a binder; and a residual organic solvent.

The closest prior art may be represented by D1 that discloses an electrolyte paste composition comprising: 60 to 80 wt.% of silver powder; 0.1 to 2 wt.% of palladium powder; 1 to 10 wt.% of inorganic binder; and 8 to 38.9 wt.% of organic binder, wherein organic binder comprises 10 to 25 wt.% of cellulose acetate butyrate, 3.2 to 13 wt.% of additives, and 62 to 86.8 wt.% of solvents, in which additives are dihydrate caster oil and disperbyk humid dispersive agent, and solvents are mixed with at least one of toluene, methylisobutylketone, ethoxyethoxyethyl acetate, buthoxyethyl acetate.

However D1 does not suggest a silver C0 to C12 aliphatic carboxylate corresponding to the technical feature of this invention, and the feature is neither known from, nor rendered obvious by, the available prior art.

Thus the present application is considered to be novel and to involve an inventive step.

Therefore, the present application meets the criteria set out in Article 33(2)-(3) PCT.

(Continued on Supplemental Box.)

Supplemental Box

In case **the space in any of the preceding boxes is not sufficient.**
Continuation of :

Box V.

2. Industrial Applicability

There is no reason for denying industrial applicability of the present application. Consequently, the present application appears to meet the requirements of Article 33(4) PCT.

UNITED STATES PATENT AND TRADEMARK OFFICE

UNITED STATES DEPARTMENT OF COMMERCE
United States Patent and Trademark Office
Address: COMMISSIONER FOR PATENTS
P.O. Box 1450
Alexandria, Virginia 22313-1450
www.uspto.gov

APPLICATION NO.	FILING DATE	FIRST NAMED INVENTOR	ATTORNEY DOCKET NO.	CONFIRMATION NO.
11/916,954	11/16/2009	Soon Yeong Heo	SHIN-001	1763

87708 7590 10/28/2010
Elizabeth Eunjoo Kim
Rauschenbach Patent Law Group, LLP
43 Hackensack Road
Chestnut Hill, MA 02467-9998

EXAMINER
KOPEC, MARK T

ART UNIT	PAPER NUMBER
1761	

NOTIFICATION DATE	DELIVERY MODE
10/28/2010	ELECTRONIC

Please find below and/or attached an Office communication concerning this application or proceeding.

The time period for reply, if any, is set in the attached communication.

Notice of the Office communication was sent electronically on above-indicated "Notification Date" to the following e-mail address(es):

ekim@rauschenbach.com
elizabethkim61@gmail.com

UNITED STATES PATENT AND TRADEMARK OFFICE

Commissioner for Patents
United States Patent and Trademark Office
P.O. Box 1450
Alexandria, VA 22313-1450
www.uspto.gov

BC

October 27, 2010

In re application of	:	DECISION ON REQUEST TO
Soon Yeong Heo et al.	:	PARTICIPATE IN PATENT
Serial No. 11/916,954	:	PROSECUTION HIGHWAY
Filed: December 07, 2007	:	PROGRAM AND
For: SILVER PASTE FOR FORMING	:	PETITION TO MAKE SPECIAL
CONDUCTIVE LAYERS	:	UNDER 37 CFR 1.102(a)

This is a decision on the request to participate in the PCT Patent Prosecution Highway (PCT-PPH) pilot program and the petition under 37 CFR 1.102(a), filed August 28, 2010, to make the above-identified application special.

The request and petition are **GRANTED**.

A grantable request to participate in the PCT-PPH pilot program and petition to make special require:

(1) The U.S. application must disclose an eligible relationship to one or more PCT applications where the ISA or IPEA are the JPO, EPO, KIPO or USPTO;

(2) At least one claim in the PCT application has novelty, inventive step, and industrial applicability and must be free of any observations in Box VIII in the latest work product in the international stage or applicant must identify and explain why the claim(s) is/are not subject to the observation in Box VIII;

(3) Applicant must submit a copy of the claim(s) from the PCT application(s) that have novelty, inventive step, and industrial applicability along with an English translation thereof and a statement that the English translation is accurate, if the claims are not in the English language;

(4) All the claims in the U.S. application must sufficiently correspond or be amended to sufficiently correspond to the claim(s) that have novelty, inventive step, and industrial applicability in the PCT application(s);

(5) Examination of the U.S. application has not begun;

(6) Applicant must submit a copy of the latest international work product from the PCT application indicating that the claim(s) have novelty, inventive step, and industrial applicability along with an English translation thereof if the latest international work

product is not in the English language; and

(7) Applicant must submit an IDS listing the documents cited by the PCT examiner in the international work product along with copies of documents except U.S. patents or U.S. patent application publications.

The request to participate in the PPH program and petition comply with the above requirements. Accordingly, the above-identified application has been accorded "special" status.

The application is being forwarded to the examiner for action on the merits commensurate with this decision.

Any inquiry regarding this decision should be directed to Blaine Copenheaver, Quality Assurance Specialist, at (571) 272-1156.

All other inquiries concerning the examination or status of the application is accessible in the PAIR system at http://www.uspto.gov/ebc/index.html.

/Blaine Copenheaver/

Blaine Copenheaver
Quality Assurance Specialist
Technology Center 1700

PTO/SB/20PCT-KR (06-10)
Approved for use through 01/31/2012. OMB 0651-0058
U.S. Patent and Trademark Office; U. S. DEPARTMENT OF COMMERCE
Under the Paperwork Reduction Act of 1995, no persons are required to respond to a collection of information unless it displays a valid OMB control number.

REQUEST FOR PARTICIPATION IN THE PATENT COOPERATION TREATY - PATENT PROSECUTION HIGHWAY (PCT-PPH) PILOT PROGRAM BETWEEN THE KOREAN INTELLECTUAL PROPERTY OFFICE (KIPO) AND THE USPTO

Application No:	11/916,956	Filing date:	December 7, 2007
First Named Inventor:	HEO, SOON YEONG		
Title of the Invention:	A METAL PASTE FOR FORMING A CONDUCTIVE LAYER		

THIS REQUEST FOR PARTICIPATION IN THE PCT-PPH PILOT PROGRAM ALONG WITH THE REQUIRED DOCUMENTS MUST BE SUBMITTED VIA EFS-WEB. INFORMATION REGARDING EFS-WEB IS AVAILABLE AT HTTP://WWW.USPTO.GOV/EBC/EFS_HELP.HTML

APPLICANT HEREBY REQUESTS PARTICIPATION IN THE PCT-PPH PROGRAM AND PETITIONS TO MAKE THE ABOVE-IDENTIFIED APPLICATION SPECIAL UNDER THE PCT-PPH PROGRAM.

The above-identified application is (1) a national stage entry of the corresponding PCT application, or (2) a national stage entry of another PCT application which claims priority to the corresponding PCT application, or (3) a national application that claims domestic/ foreign priority to the corresponding PCT application, or (4) a national application which forms the basis for the priority claim in the corresponding PCT application, or (5) a continuing application of a U.S. application that satisfies one of (1) to (4) above, or (6) a U.S. application that claims domestic benefit to a U.S. provisional application which forms the basis for the priority claim in the corresponding PCT application.

The corresponding PCT application number(s) is/are: PCT/KR2007/002561

The international date of the corresponding PCT application(s) is/are: 28 MAY 2007

I. List of Required Documents:

a. **A copy of the latest international work product (WO/ISA, WO/IPEA, or IPER) in the above–identified corresponding PCT application(s)**

- [x] Is attached.
- [ ] Is not attached because the document is already in the U.S. application.

b. **A copy of all claims which were indicated as having novelty, inventive step and industrial applicability in the above-identified corresponding PCT application(s).**

- [x] Is attached.
- [ ] Is not attached because the document is already in the U.S. application.

c. **English translations of the documents in a. and b. above are attached (if the documents are not in the English language). A statement that the English translation is accurate is attached for the document in b. above.**

This collection of information is required by 35 U.S.C. 119, 37 CFR 1.55, and 37 CFR 1.102(d). The information is required to obtain or retain a benefit by the public, which is to file (and by the USPTO to process) an application. Confidentiality is governed by 35 U.S.C. 122 and 37 CFR 1.11 and 1.14. This collection is estimated to take 2 hours to complete, including gathering, preparing, and submitting the completed application form to the USPTO. Time will vary depending upon the individual case. Any comments on the amount of time you require to complete this form and/or suggestions for reducing this burden should be sent to the Chief Information Officer, U.S. Patent and Trademark Office, U.S. Department of Commerce, P.O. Box 1450, Alexandria, VA 22313-1450. DO NOT SEND FEES OR COMPLETED FORMS TO THIS ADDRESS.

Approved for use through 01/31/2012. OMB 0651-0058
U.S.Patent and Trademark Office; U.S. DEPARTMENT OF COMMERCE
Under the Paperwork Reduction Act of 1995, no persons are required to respond to a collection of information unless it displays a valid OMB control number.

REQUEST FOR PARTICIPATION IN THE PCT-PPH PILOT PROGRAM BETWEEN THE KIPO AND THE USPTO

(continued)

Application No.:	11/916956
First Named Inventor:	HEO, SOON YEONG

d. **(1) An information disclosure statement listing the documents cited in the international work products (ISR, WO/ISA, WO/IPEA, IPER) of the corresponding PCT application.**

☐ Is attached

☒ Has already been filed in the above-identified U.S. application on 2010-01-25

(2) Copies of all documents (except) for U.S. patents or U.S. patent application publications)

☐ Are attached.

Have already been filed in the above-identified U.S. application on _____

II. Claims Correspondence Table:

Claims in US Application	Patentable Claims in the corresponding PCT Application	Explanation regarding the correspondence
1-12	1-12	The claims are identical.

III. All the claims in the US application sufficiently correspond to the patentable claims in the corresponding PCT application.

Signature	/Elizabeth E. Kim/	Date	August 29, 2010
Name (Print/Typed)	Elizabeth E. Kim	Registration Number	43334

Privacy Act Statement

The **Privacy Act of 1974 (P.L. 93-579)** requires that you be given certain information in connection with your submission of the attached form related to a patent application or patent. Accordingly, pursuant to the requirements of the Act, please be advised that: (1) the general authority for the collection of this information is 35 U.S.C. 2(b)(2); (2) furnishing of the information solicited is voluntary; and (3) the principal purpose for which the information is used by the U.S. Patent and Trademark Office is to process and/or examine your submission related to a patent application or patent. If you do not furnish the requested information, the U.S. Patent and Trademark Office may not be able to process and/or examine your submission, which may result in termination of proceedings or abandonment of the application or expiration of the patent.

The information provided by you in this form will be subject to the following routine uses:

1. The information on this form will be treated confidentially to the extent allowed under the Freedom of Information Act (5 U.S.C. 552) and the Privacy Act (5 U.S.C 552a). Records from this system of records may be disclosed to the Department of Justice to determine whether disclosure of these records is required by the Freedom of Information Act.
2. A record from this system of records may be disclosed, as a routine use, in the course of presenting evidence to a court, magistrate, or administrative tribunal, including disclosures to opposing counsel in the course of settlement negotiations.
3. A record in this system of records may be disclosed, as a routine use, to a Member of Congress submitting a request involving an individual, to whom the record pertains, when the individual has requested assistance from the Member with respect to the subject matter of the record.
4. A record in this system of records may be disclosed, as a routine use, to a contractor of the Agency having need for the information in order to perform a contract. Recipients of information shall be required to comply with the requirements of the Privacy Act of 1974, as amended, pursuant to 5 U.S.C. 552a(m).
5. A record related to an International Application filed under the Patent Cooperation Treaty in this system of records may be disclosed, as a routine use, to the International Bureau of the World Intellectual Property Organization, pursuant to the Patent Cooperation Treaty.
6. A record in this system of records may be disclosed, as a routine use, to another federal agency for purposes of National Security review (35 U.S.C. 181) and for review pursuant to the Atomic Energy Act (42 U.S.C. 218(c)).
7. A record from this system of records may be disclosed, as a routine use, to the Administrator, General Services, or his/her designee, during an inspection of records conducted by GSA as part of that agency's responsibility to recommend improvements in records management practices and programs, under authority of 44 U.S.C. 2904 and 2906. Such disclosure shall be made in accordance with the GSA regulations governing inspection of records for this purpose, and any other relevant (*i.e.*, GSA or Commerce) directive. Such disclosure shall not be used to make determinations about individuals.
8. A record from this system of records may be disclosed, as a routine use, to the public after either publication of the application pursuant to 35 U.S.C. 122(b) or issuance of a patent pursuant to 35 U.S.C. 151. Further, a record may be disclosed, subject to the limitations of 37 CFR 1.14, as a routine use, to the public if the record was filed in an application which became abandoned or in which the proceedings were terminated and which application is referenced by either a published application, an application open to public inspection or an issued patent.
9. A record from this system of records may be disclosed, as a routine use, to a Federal, State, or local law enforcement agency, if the USPTO becomes aware of a violation or potential violation of law or regulation.

USSN 11/916,956
SHIN-002

Copy of All Claims Which Were Indicated As Having Novelty, Inventive Step and Industrial Applicability In Corresponding PCT Application

Claims

[1] A paste for forming an electrically conductive layer comprising a metal solution in a reactive organic solvent having a heteroatom, P, S, O, or N; metal powder; a binder; and a residual amount of a polar or non-polar viscosity modulating solvent.

[2] A paste for forming an electrically conductive layer comprising a metal solution consisting of an effective amount of metal C1 to C12 aliphatic carboxylate having 1 to 3 carboxyl groups and a reactive organic solvent for dissolving the metal aliphatic carboxylate; metal powder; a binder; and a residual amount of a polar or non-polar viscosity modulating solvent.

[3] The paste for forming an electrically conductive layer according to claim 2, wherein the metal is silver, the silver solution is contained in an amount of 0.1 to 90w%, the silver powder are contained in an amount of 1 to 95w%, and the binder is contained in an amount of 0.1 to 15w%.

[4] The paste for forming an electrically conductive layer according to claim 3, wherein the reactive organic solvent is selected from the group consisting of an amine substituted by one or more C1 to C6 aliphatic group and a linear or branched C1 to C16 aliphatic thiol.

[5] The paste for forming an electrically conductive layer according to claim 4, wherein the silver aliphatic carboxylate is substituted by an amino group, a nitro group, or a hydroxyl group, and the C1 to C6 aliphatic group of the amine as the reactive organic solvent is substituted with a nitro group, or a hydroxyl group.

[6] The paste for forming an electrically conductive layer according to claim 4, wherein the silver powder has an average particle diameter of micrometer scale.

[7] The paste for forming an electrically conductive layer according to claim 6, wherein the silver aliphatic carboxylate is selected from the group consisting of silver citrate, silver oxalate, silver formate, silver maleate and a mixture thereof.

[8] The paste for forming an electrically conductive layer according to claim 7, wherein the binder is a polymeric compound.

[9] The paste for forming an electrically conductive layer according to claim 8, wherein the reactive organic solvent is methylamine, ethylamine, iso-propylamine, monoethanolamine, diethanolamine, triethanolamine, or a linear, saturated aliphatic thiol containing 5 to 14 carbon atoms.

[10] The paste for forming an electrically conductive layer according to claim 9,

wherein the binder is a thermosetting binder, and is contained in an amount of 1 to 13w%, and the silver solution is contained in an amount of 0.1 to 40w%.

[11] The paste for forming an electrically conductive layer according to claim 10, wherein the polar or non-polar solvent is C1 to C4 aliphatic alcohol having a mono- to tri-valent hydroxyl group, C2 to C8 alkyl ether of the aliphatic alcohol or C2 to C8 alkyl ester of the aliphatic alcohol .

[12] The paste for forming an electrically conductive layer according to claim 11, wherein the polar or non-polar solvent is selected from the group consisting of butylcarbitol acetate, butylcarbitol, ethylcarbitol, ethylcarbitol acetate, terpineol, texanol, menthanol, isoamyl acetate, methanol, ethanol, and a mixture thereof.

PATENT COOPERATION TREATY

From the
INTERNATIONAL SEARCHING AUTHORITY

To:
SHINSEGI PATENT LAW FIRM

3rd Floor, Yoong-jun Bldg., 829-6 Yeoksam-dong, Gangnam-ku Seoul 135-936 Republic of Korea

PCT

WRITTEN OPINION OF THE INTERNATIONAL SEARCHING AUTHORITY

(PCT Rule 43bis.1)

Date of mailing *(day/month/year)*	**25 OCTOBER 2007 (25.10.2007)**
Applicant's or agent's file reference LBM144-07	**FOR FURTHER ACTION** See paragraph 2 below

International application No.	International filing date *(day/month/year)*	Priority date *(day/month/year)*
PCT/KR2007/002561	**28 MAY 2007 (28.05.2007)**	30 JANUARY 2007 (30.01.2007)

International Patent Classification (IPC) or both national classification and IPC

H01B 1/22(2006.01)i

Applicant

EXAX INC. et al

1. This opinion contains indications relating to the following items:

- [x] Box No. I Basis of the opinion
- [ ] Box No. II Priority
- [ ] Box No. III Non-establishment of opinion with regard to novelty, inventive step and industrial applicability
- [ ] Box No. IV Lack of unity of invention
- [x] Box No. V Reasoned statement under Rule 43bis.1(a)(i) with regard to novelty, inventive step or industrial applicability; citations and explanations supporting such statement
- [ ] Box No. VI Certain documents cited
- [ ] Box No. VII Certain defects in the international application
- [ ] Box No. VIII Certain observations on the international application

2. **FURTHER ACTION**

If a demand for international preliminary examination is made, this opinion will be considered to be a written opinion of the International Preliminary Examining Authority ("IPEA") except that this does not apply where the applicant chooses an Authority other than this one to be the IPEA and the chosen IPEA has notified the International Bureau under Rule 66.1bis(b) that written opinions of this International Searching Authority will not be so considered.

If this opinion is, as provided above, considered to be a written opinion of the IPEA, the applicant is invited to submit to the IPEA a written reply together, where appropriate, with amendments, before the expiration of 3 months from the date of mailing of Form PCT/ISA/220 or before the expiration of 22 months from the priority date, whichever expires later.
For further options, see Form PCT/ISA/220.

3. For further details, see notes to Form PCT/ISA/220.

Name and mailing address of the ISA/KR	Date of completion of this opinion	Authorized officer
Korean Intellectual Property Office 920 Dunsan-dong, Seo-gu, Daejeon 302-701, Republic of Korea Facsimile No. 82-42-472-7140	25 OCTOBER 2007 (25.10.2007)	JUNG Sug Woo Telephone No.82-42-481-839(

WRITTEN OPINION OF THE INTERNATIONAL SEARCHING AUTHORITY

International application No.
PCT/KR2007/002561

Box No. I Basis of this opinion

1. With regard to the **language**, this opinion has been established on the basis of:

   ☒ the international application in the language in which it was filed

   ☐ a translation of the international application into _____ , which is the language of a translation furnished for the purposes of international search (Rules 12.3(a) and 23.1(b))

2. ☐ This opinion has been established taking into account the **rectification of an obvious mistake** authorized by or notified to this Authority under Rule 91 (Rule 43*bis*.1(a))

3. With regard to any **nucleotide and/or amino acid sequence** disclosed in the international application, this opinion has been established on the basis of:

   a. type of material
   ☐ a sequence listing
   ☐ table(s) related to the sequence listing

   b. format of material
   ☐ on paper
   ☐ in electronic form

   c. time of filing/furnishing
   ☐ contained in the international application as filed.
   ☐ filed together with the international application in electronic form.
   ☐ furnished subsequently to this Authority for the purposes of search.

4. ☐ In addition, in the case that more than one version or copy of a sequence listing and/or table relating thereto has been filed or furnished, the required statements that the information in the subsequent or additioanl copies is identical to that in the application as filed or does not go beyond the application as filed, as appropriate, were furnished.

5. Additional comments:

WRITTEN OPINION OF THE INTERNATIONAL SEARCHING AUTHORITY

International application No.
PCT/KR2007/002561

Box No. V Reasoned statement under Rule 43bis.1(a)(i) with regard to novelty, inventive step or industrial applicability; citations and explanations supporting such statement

1. Statement

Novelty (N)	Claims	1-12	YES
	Claims	None	NO
Inventive step (IS)	Claims	1-12	YES
	Claims	None	NO
Industrial applicability (IA)	Claims	1-12	YES
	Claims	None	NO

2. Citations and explanations :

Reference is made to the following documents:

D1: KR 10-1997-0076901 A

1. Novelty & Inventive Step

The present application refers to a metal paste for forming an electrically conductive layer.

The problem to be solved by the present application is to provide a metal paste for forming an electrically conductive layer having excellent electrical conductivity, being economically prepared, having high adaptability to various surfaces, and having excellent conductivity through metallization at a relatively lower temperature.

Independent claim 1 as one solution is to provide a metal paste comprising: a metal solution in a reactive organic solvent having a heteroatom, P, S, O, or N; metal powder; a binder; and a residual amount of a polar or non-polar viscosity modulating solvent. Independent claim 2 as another solution is to provide a metal paste comprising: a metal solution consisting of an effective amount of metal C1 to C12 aliphatic carboxylate having 1 to 3 carboxyl groups and a reactive organic solvent for dissolving the metal aliphatic carboxylate; metal powder; a binder; and a residual amount of a polar or non-polar viscosity modulating solvent.

The closest prior art may be represented by D1 that discloses an electrolyte paste composition comprising: 60 to 80 wt.% of silver powder; 0.1 to 2 wt.% of palladium powder; 1 to 10 wt.% of inorganic binder; and 8 to 38.9 wt.% of organic binder, wherein organic binder comprises 10 to 25 wt.% of cellulose acetate butyrate, 3.2 to 13 wt.% of additives, and 62 to 86.8 wt.% of solvents, in which additives are dihydrate caster oil and disperbyk humid dispersive agent, and solvents are mixed with at least one of toluene, methylisobutylketone, ethoxyethoxyethyl acetate, buthoxyethyl acetate.

However D1 does not suggest the metal solution of claims 1 and 2 corresponding to the technical feature of this invention, and the feature is neither known from, nor rendered obvious by, the available prior art.

(Continued on Supplemental Box.)

Supplemental Box

In case the space in any of the preceding boxes is not sufficient.
Continuation of :

Box V.

Thus the present application is considered to be novel and to involve an inventive step.

Therefore, the present application meets the criteria set out in Article 33(2)-(3) PCT.

2. Industrial Applicability

There is no reason for denying industrial applicability of the present application. Consequently, the present application appears to meet the requirements of Article 33(4) PCT.

COPY FOR IB

PCT/KR2007/002561

PATENT COOPERATION TREATY

PCT

INTERNATIONAL PRELIMINARY REPORT ON PATENTABILITY

(Chapter II of the Patent Cooperation Treaty)

(PCT Article 36 and Rule 70)

Applicant's or agent's file reference LBM144-07	FOR FURTHER ACTION	See Form PCT/IPEA/416
International application No. **PCT/KR2007/002561**	International filing date *(day/month/year)* 28 MAY 2007 (28.05.2007)	Priority date *(day/month/year)* 30 JANUARY 2007 (30.01.2007)
International Patent Classification (IPC) or national classification and IPC ***H01B 1/22(2006.01)i***		
Applicant **EXAX INC. et al**		

1. This report is the international preliminary examination report, established by this International Preliminary Examining Authority under Article 35 and transmitted to the applicant according to Article 36.
2. This REPORT consists of a total of 3 sheets, including this cover sheet.
3. This report is also accompanied by ANNEXES, comprising:
   a. ☒ (sent to the applicant and to the International Bureau) a total of 15 sheets, as follows:
      - ☒ sheets of the description, claims and/or drawings which have been amended and are the basis for this report and/or sheets containing rectifications authorized by this Authority (see Rule 70.16 and Section 607 of the Administrative Instructions).
      - ☐ sheets which supersede earlier sheets, but which this Authority considers contain an amendment that goes beyond the disclosure in the international application as filed, as indicated in item 4 of Box No. I and the Supplemental Box.
   b. ☐ *(sent to the International Bureau only)* a total of (indicate type and number of electronic carrier(s)) _____, containing a sequence listing and/or tables related thereto, in electronic form only, as indicated in the Supplemental Box relating to Sequence Listing (see Section 802 of the Administrative Instructions).
4. This report contains indications relating to the following items:
   - ☒ Box No. I Basis of the report
   - ☐ Box No. II Priority
   - ☐ Box No. III Non-establishment of opinion with regard to novelty, inventive step and industrial applicability
   - ☐ Box No. IV Lack of unity of invention
   - ☒ Box No. V Reasoned statement under Article 35(2) with regard to novelty, inventive step or industrial applicability; citations and explanations supporting such statement
   - ☐ Box No. VI Certain documents cited
   - ☐ Box No. VII Certain defects in the international application
   - ☐ Box No. VIII Certain observations on the international application

Date of submission of the demamd **26 JUNE 2008 (26.06.2008)**	Date of completion of this report 26 FEBRUARY 2009 (26.02.2009)
Name and mailing address of the IPEA/KR Korean Intellectual Property Office Government Complex-Daejeon, 139 Seonsa-ro, Seo-gu, Daejeon 302-701, Republic of Korea Facsimile No. 82-42-472-7140	Authorized officer Jang, Ki Wan Telephone No. 82-42-481-5567

INTERNATIONAL PRELIMINARY REPORT ON PATENTABILITY

International application No.
PCT/KR2007/002561

Box No. I Basis of the report

1. With regard to the **language**, this report is based on:

   ☒ the international application in the language in which it was filed.

   ☐ a translation of the international application into _____ which is the language of a translation furnished for the purposes of:
   - ☐ international search (under Rules 12.3(a) and 23.1(b)).
   - ☐ publication of the international application (under Rule 12.4(a)).
   - ☐ international preliminary examination (under Rules 55.2(a) and/or 55.3(a)).

2. With regard to the **elements** of the international application, this report is based on *(replacement sheets which have been furnished to the receiving Office in response to an invitation under Article 14 are referred to in this report as "originally filed" and are not annexed to this report):*

   ☐ the international application as originally filed/furnished

   ☒ the description:
   pages _____ as originally filed/furnished
   pages* 1-13 _____ received by this Authority on 18/02/2009
   pages* _____ received by this Authority on _____

   ☒ the claims:
   pages _____ as originally filed/furnished
   pages* _____ as amended (together with any statment) under Article 19
   pages* 14,15 _____ received by this Authority on 18/02/2009
   pages* _____ received by this Authority on _____

   ☒ the drawings:
   pages 1/2, 2/2 _____ as originally filed/furnished
   pages* _____ received by this Authority on _____
   pages* _____ received by this Authority on _____

   ☐ the sequence listing and/or any related table(s) - see Supplemental Box Relating to Sequence Listing.

3. ☒ The amendments have resulted in the cancellation of:
   - ☒ the description, pages 14
   - ☐ the claims, Nos. _____
   - ☐ the drawings, sheets _____
   - ☐ the sequence listing *(specify)* : _____
   - ☐ any table(s) related to sequence listing *(specify)* : _____

4. ☐ This report has been established as if (some of) the amendments annexed to this report and listed below had not been made, since they have been considered to go beyond the disclosure as filed, as indicated in the Supplemental Box (Rule 70.2(c)).
   - ☐ the description, pages _____
   - ☐ the claims, Nos. _____
   - ☐ the drawings, sheets _____
   - ☐ the sequence listing *(specify)*: _____
   - ☐ any table(s) related to sequence listing *(specify)* : _____

5. ☐ This report has been established taking into account the **rectification of an obvious mistake** authorized by or notified to this Authority under Rule 91 (Rule70.2(e)).

6. ☐ Supplementary international search report(s) from Authority(ies) _____ have been received and taken into account in drawing up this report (Rule 45*bis*.8(b) and (c)).

* *If item 4 applies, some or all of those sheets may be marked "superseded."*

INTERNATIONAL PRELIMINARY REPORT ON PATENTABILITY

International application No.
PCT/KR2007/002561

Box No. V Reasoned statement under Article 35(2) with regard to novelty, inventive step or industrial applicability; citations and explanations supporting such statement

1. Statement

Novelty (N)	Claims	1-12	YES
	Claims	None	NO
Inventive step (IS)	Claims	1-12	YES
	Claims	None	NO
Industrial applicability (IA)	Claims	1-12	YES
	Claims	None	NO

2. Citations and explanations (Rule 70.7)

Reference is made to the following documents:

D1 : KR 10-1997-0076901 A
D2 : KR 10-1999-0056608 A
D3 : KR 10-2006-0030638 A
D4 : JP 18-183072 A

1. Novelty and Inventive Step

The subject matters of claims 1 and 2 differ from these prior art documents in that the paste comprises a metal solution having a heteroatom (P, S, O, or N) and metal C1 to C12 aliphatic carboxylate having 1 to 3 carboxyl groups respectively. And it is not obvious to a skilled person in the art by the documents, taken alone or in combination. Therefore, claims 1 and 2 meet the requirements of PCT Article 33(2) and (3) with respect to novelty and inventive step.

Claims 3-12 are dependent on claims 2. Therefore said dependent claims as such also meet the requirements of PCT Article 33(2) and (3).

2. Industrial Applicability

Claims 1-12 are industrially applicable under PCT Article 33(4).

UNITED STATES PATENT AND TRADEMARK OFFICE

UNITED STATES DEPARTMENT OF COMMERCE
United States Patent and Trademark Office
Address: COMMISSIONER FOR PATENTS
P.O. Box 1450
Alexandria, Virginia 22313-1450
www.uspto.gov

APPLICATION NO.	FILING DATE	FIRST NAMED INVENTOR	ATTORNEY DOCKET NO.	CONFIRMATION NO.
11/916,956	11/17/2009	Soon Yeong Heo	SHIN-002	1820

87708 7590 10/28/2010
Elizabeth Eunjoo Kim
Rauschenbach Patent Law Group, LLP
43 Hackensack Road
Chestnut Hill, MA 02467-9998

EXAMINER
KOPEC, MARK T

ART UNIT	PAPER NUMBER
1761	

NOTIFICATION DATE	DELIVERY MODE
10/28/2010	ELECTRONIC

Please find below and/or attached an Office communication concerning this application or proceeding.

The time period for reply, if any, is set in the attached communication.

Notice of the Office communication was sent electronically on above-indicated "Notification Date" to the following e-mail address(es):

ekim@rauschenbach.com
elizabethkim61@gmail.com

UNITED STATES PATENT AND TRADEMARK OFFICE

Commissioner for Patents
United States Patent and Trademark Office
P.O. Box 1450
Alexandria, VA 22313-1450
www.uspto.gov

BC

October 27, 2010

In re application of Soon Yeong Heo et al. Serial No. 11/916,956 Filed: December 07, 2007 For: METAL PASTE FOR FORMING CONDUCTIVE LAYERS	: : : : : :	DECISION ON REQUEST TO PARTICIPATE IN PATENT PROSECUTION HIGHWAY PROGRAM AND PETITION TO MAKE SPECIAL UNDER 37 CFR 1.102(a)

This is a decision on the request to participate in the PCT Patent Prosecution Highway (PCT-PPH) pilot program and the petition under 37 CFR 1.102(a), filed August 28, 2010, to make the above-identified application special.

The request and petition are **GRANTED**.

A grantable request to participate in the PCT-PPH pilot program and petition to make special require:

(1) The U.S. application must disclose an eligible relationship to one or more PCT applications where the ISA or IPEA are the JPO, EPO, KIPO or USPTO;

(2) At least one claim in the PCT application has novelty, inventive step, and industrial applicability and must be free of any observations in Box VIII in the latest work product in the international stage or applicant must identify and explain why the claim(s) is/are not subject to the observation in Box VIII;

(3) Applicant must submit a copy of the claim(s) from the PCT application(s) that have novelty, inventive step, and industrial applicability along with an English translation thereof and a statement that the English translation is accurate, if the claims are not in the English language;

(4) All the claims in the U.S. application must sufficiently correspond or be amended to sufficiently correspond to the claim(s) that have novelty, inventive step, and industrial applicability in the PCT application(s);

(5) Examination of the U.S. application has not begun;

(6) Applicant must submit a copy of the latest international work product from the PCT application indicating that the claim(s) have novelty, inventive step, and industrial applicability along with an English translation thereof if the latest international work

product is not in the English language; and

(7) Applicant must submit an IDS listing the documents cited by the PCT examiner in the international work product along with copies of documents except U.S. patents or U.S. patent application publications.

The request to participate in the PPH program and petition comply with the above requirements. Accordingly, the above-identified application has been accorded "special" status.

The application is being forwarded to the examiner for action on the merits commensurate with this decision.

Any inquiry regarding this decision should be directed to Blaine Copenheaver, Quality Assurance Specialist, at (571) 272-1156.

All other inquiries concerning the examination or status of the application is accessible in the PAIR system at http://www.uspto.gov/ebc/index.html.

/Blaine Copenheaver/

Blaine Copenheaver
Quality Assurance Specialist
Technology Center 1700

UNITED STATES PATENT AND TRADEMARK OFFICE

Commissioner for Patents
United States Patent and Trademark Office
P.O. Box 1450
Alexandria, VA 22313-1450
www.uspto.gov

WRB-IP LLP
801 N. PITT STREET
SUITE 123
ALEXANDRIA VA 22314

MAILED

FEB 11 2011

OFFICE OF PETITIONS

In re Application of	:	
Sjogren et al.	:	
Application No. 11/917,001	:	DECISION ON PETITION
Filed: December 9, 2007	:	
Attorney Docket No. 000009-169	:	

This is a decision on the petition under the unintentional provisions of 37 CFR 1.137(b), filed January 12, 2011, to revive the above-identified application.

The petition is **GRANTED**.

The application became abandoned for failure to reply in a proper and timely manner to the final Office action mailed, July 8, 2010, which set a shortened statutory period for reply of three (3) months. No extensions of time under the provisions of 37 CFR 1.136(a) were obtained. Accordingly, the application became abandoned on October 9, 2010.

The petition satisfies the requirements of 37 CFR 1.137(b) in that petitioner has supplied (1) the reply in the form of a Notice of Appeal and fee of $540.00; (2) the petition fee of $1,620.00; and (3) a proper statement of unintentional delay.

The two-month period for filing an appeal brief under 37 CFR 41.37 (accompanied by the fee required by 37 CFR 41.20(b)(2)), runs from the date of this decision.

Telephone inquiries concerning this decision should be directed to the undersigned at (571) 272-7751.

This matter is being referred to Technology Center AU 3663 to await the filing of an appeal brief or for such other appropriate reply as may be submitted to continue prosecution of the application.

Joan Olszewski
Petitions Examiner
Office of Petitions

UNITED STATES PATENT AND TRADEMARK OFFICE

UNITED STATES DEPARTMENT OF COMMERCE
United States Patent and Trademark Office
Address: COMMISSIONER FOR PATENTS
P.O. Box 1450
Alexandria, Virginia 22313-1450
www.uspto.gov

APPLICATION NO.	FILING DATE	FIRST NAMED INVENTOR	ATTORNEY DOCKET NO.	CONFIRMATION NO.
11/917,022	12/10/2007	Stephane Valente	00 0052 US1	1652

65913 7590 02/23/2012
Intellectual Property and Licensing
NXP B.V.
411 East Plumeria Drive, MS41
SAN JOSE, CA 95134

EXAMINER
SINKANTARAKORN, PAWARIS

ART UNIT	PAPER NUMBER
2464	

NOTIFICATION DATE	DELIVERY MODE
02/23/2012	ELECTRONIC

Please find below and/or attached an Office communication concerning this application or proceeding.

The time period for reply, if any, is set in the attached communication.

Notice of the Office communication was sent electronically on above-indicated "Notification Date" to the following e-mail address(es):

ip.department.us@nxp.com

UNITED STATES PATENT AND TRADEMARK OFFICE

Commissioner for Patents
United States Patent and Trademark Office
P.O. Box 1450
Alexandria, VA 22313-1450
www.uspto.gov

Intellectual Property and Licensing
NXP B.V.
411 East Plumeria Drive, MS41
SAN JOSE CA 95134

In re Application of: VALENTE, S. et al.
Application No.: **11/917,022**
Filed: December 10, 2007
Docket No.: 00 0052 US1
Title: DECODIG METHOD AND DECODER WITH ROUDING MEANS

DECISION ON PETITION

UNDER 37 C.F.R. § 1.181

This is a decision on the petition filed on **January 30, 2012** under 37 CFR § 1.181(a) requesting that the finality of Office Action dated November 30, 2011 be withdrawn, as being improper because no response to numerous underlying arguments presented by Applicant were not responded to and correspondence with the various limitations of the claimed with the applied prior art has not been provided.

The petition is **DISMISSED AS MOOT**.

A review of the file of the instant application indicates that on February 21, 2012, the Office issued a Notice of Allowance were all pending claims 1-10 were allowed. Accordingly, the petition is dismissed as moot.

Any inquiry regarding this decision should be directed the undersigned whose telephone number is (571) 272-3902. If attempts to reach the undersigned by telephone are unsuccessful, Christopher C. Grant, Quality Assurance Specialist, can be reached at (571) 272-7294.

/Beatriz Prieto/

Beatriz Prieto, Quality Assurance Specialist (QAS)
Technology Center 2400

UNITED STATES PATENT AND TRADEMARK OFFICE

Commissioner for Patents
United States Patent and Trademark Office
P.O. Box 1450
Alexandria, VA 22313-1450
www.uspto.gov

OSHA LIANG L.L.P.
TWO HOUSTON CENTER
909 FANNIN, SUITE 3500
HOUSTON TX 77010

MAILED

DEC 23 2011

OFFICE OF PETITIONS

In re Application of :
Suzuki et al. :
Application No.: 11/917026 : ON PETITION
Filing or 371(c) Date: 12/10/2007 :
Title of Invention: :
SOLUTION FOR TISSUE ADHESION :
PREVENTION AND METHOD FOR :
TISSUE ADHESION PREVENTION :

This is a decision on the Petition for Revival of an Application for Patent Abandoned Unintentionally Under 37 C.F.R. § 1.137(b), filed December 5, 2011.

This Petition is hereby **dismissed**.

Any further petition to revive the above-identified application must be submitted within TWO (2) MONTHS from the mail date of this decision. Extensions of time under 37 CFR 1.136(a) are permitted. The reconsideration request should include a cover letter entitled "Request for Reconsideration of Petition under [insert the applicable code section]". This is **not** final agency action within the meaning of 5 U.S.C. § 704.

Background

The above-identified application became abandoned for failure to timely reply to the Notice of Non-Compliant Amendment ("Notice"), mailed January 13, 2011. The Notice set a three (3) period for reply. Extensions of time under 37 CFR 1.136(a) were available.

In an Examiner Interview entered into the application file on July 20, 2011, the Examiner noted the following: "Ms. Mack confirmed that the case was being allowed to go abandoned in response to the notice of non-responsive amendment."

Office records confirm that Ms. Mack was applicant's duly appointed and authorized representative for the present application, responsible for prosecuting the present application as directed in the oath/declaration filed with the present application on December 0, 2007. Ms. Mack filed an Amendment in reply to a non-final Office action on December 30, 2010. In response, the Office mailed the Notice of Non-Compliant Amendment on January 13, 2011.

Subsequent to the Interview Summary, the Office mailed a Notice of Abandonment on July 20, 2011. The Notice of Abandonment reiterated that Ms. Mack confirmed that the case was being allowed to go abandoned in response to the notice of non-responsive amendment.

Applicant files the present petition to revive the application. The petition is accompanied by a statement that identifies Ms. Mack as previous counsel and notes that previous counsel failed to file a reply to the Notice. Petitioner further provides that Applicant contacted petitioner on March 11, 2011, to file a divisional application. Applicant also notes that the parent application (the present application), and the divisional application were handled by different law firms.

Applicable Law, Rules and MPEP

A grantable petition pursuant to this paragraph must be accompanied by:
(1) The reply required to the outstanding Office action or notice, unless previously filed;
(2) The petition fee as set forth in § 1.17(m);
(3) A statement that the entire delay in filing the required reply from the due date for the reply until the filing of a grantable petition pursuant to this paragraph was unintentional. The Director may require additional information where there is a question whether the delay was unintentional; and
(4) Any terminal disclaimer (and fee as set forth in § 1.20(d)) required pursuant to paragraph (d) of this section.

However, an applicant is unable to make the statement that the entire delay in filing the required reply from the due date for the reply until the filing of a grantable petition pursuant to this paragraph was unintentional, where there is shown to be intentional delay.

The MPEP provides

> A delay resulting from a deliberately chosen course of action on the part of the applicant does not become an "unintentional" delay within the meaning of 37 CFR 1.137(b) because:
>
> (A) the applicant does not consider the claims to be patentable over the references relied upon in an outstanding Office action;
> (B) the applicant does not consider the allowed or patentable claims to be of sufficient breadth or scope to justify the financial expense of obtaining a patent;
> (C) the applicant does not consider any patent to be of sufficient value to justify the financial expense of obtaining the patent;
> (D) the applicant does not consider any patent to be of sufficient value to maintain an interest in obtaining the patent; or
> (E) the applicant remains interested in eventually obtaining a patent, but simply seeks to defer patent fees and patent prosecution expenses.
>
> Likewise, a change in circumstances that occurred subsequent to the abandonment of an application does not render "unintentional" the delay resulting from a previous deliberate decision to permit an application to be abandoned. These matters simply

confuse the question of whether there was a deliberate decision not to continue the prosecution of an application with why there was a deliberate decision not to continue the prosecution of an application.

D. Delay Until the Filing of a Grantable Petition

There are three periods to be considered during the evaluation of a petition under 37 CFR 1.137:

(A) the delay in reply that originally resulted in the abandonment;
(B) the delay in filing an initial petition pursuant to 37 CFR 1.137 to revive the application; and
(C) the delay in filing a grantable petition pursuant to 37 CFR 1.137 to revive the application.

As discussed above, the abandonment of an application is considered to be a deliberately chosen course of action, and the resulting delay cannot be considered as "unintentional" within the meaning of 37 CFR 1.137(b), where the applicant deliberately permits the application to become abandoned. See Application of G, 11 USPQ2d at 1380. Likewise, where the applicant deliberately chooses not to seek or persist in seeking the revival of an abandoned application, or where the applicant deliberately chooses to delay seeking the revival of an abandoned application, the resulting delay in seeking revival of the abandoned application cannot be considered as "unintentional" within the meaning of 37 CFR 1.137(b). An intentional delay resulting from a deliberate course of action chosen by the applicant is not affected by:

(A) the correctness of the applicant's (or applicant's representative's) decision to abandon the application or not to seek or persist in seeking revival of the application;
(B) the correctness or propriety of a rejection, or other objection, requirement, or decision by the Office; or
(C) the discovery of new information or evidence, or other change in circumstances subsequent to the abandonment or decision not to seek or persist in seeking revival.

Obviously, delaying the revival of an abandoned application, by a deliberately chosen course of action, until the industry or a competitor shows an interest in the invention is the antithesis of an "unavoidable" or "unintentional" delay. An intentional abandonment of an application, or an intentional delay in seeking the revival of an abandoned application, precludes a finding of unavoidable or unintentional delay pursuant to 37 CFR 1.137. See Maldague, 10 USPQ2d at 1478.

MPEP 711.03(c)(2)

<u>Analysis and conclusion</u>

In this instance, Applicant made a deliberate decision to allow this application to go abandoned. An intentional abandonment of an application, or an intentional delay in seeking the revival of an abandoned application, precludes a finding of unavoidable or unintentional delay pursuant to 37 CFR 1.137.

Moreover petitioner, admittedly not responsible for prosecuting the present application, is not in a position to state whether the entire delay in filing the required reply from the due date for the reply until the filing of a grantable petition pursuant to this paragraph was unintentional. At a minimum, a statement from Ms. Mack, clarifying her decision to allow this application to go abandoned and explaining why and/or how this decision can be construed as anything other that a decision to allow the case to go abandoned, is requied.

Further correspondence with respect to this matter should be addressed as follows:

By mail: Director for Patents
PO Box 1450
Alexandria, VA 22313-1450

By FAX: (571) 273-8300
Attn: Office of Petitions

By hand: Customer Service Window
Randolph Building
401 Dulany Street
Alexandria, VA 22314

Telephone inquiries concerning this petition Decision should be directed to the undersigned at (571) 272-3232.

/DLW/

Derek L. Woods
Attorney
Office of Petitions

UNITED STATES PATENT AND TRADEMARK OFFICE

Commissioner for Patents
United States Patent and Trademark Office
P.O. Box 1450
Alexandria, VA 22313-1450
www.uspto.gov

OSHA LIANG L.L.P.
TWO HOUSTON CENTER
909 FANNIN, SUITE 3500
HOUSTON TX 77010

MAILED
FEB 07 2012
OFFICE OF PETITIONS

In re Application of :
Suzuki et al. :
Application No.: 11/917026 : ON PETITION
Filing or 371(c) Date: 12/10/2007 :
Title of Invention: :
SOLUTION FOR TISSUE ADHESION :
PREVENTION AND METHOD FOR :
TISSUE ADHESION PREVENTION :

This is a decision on the Petition for Revival of an Application for Patent Abandoned Unintentionally Under 37 C.F.R. § 1.137(b), filed February 1, 2012.

This Petition is hereby **granted**.

Background

The above-identified application became abandoned for failure to timely reply to the Notice of Non-Compliant Amendment ("Notice"), mailed January 13, 2011. The Notice set a one (1) period for reply. Extensions of time under 37 CFR 1.136(a) were available.

In an Examiner Interview entered into the application file on July 20, 2011, the Examiner noted the following: "Ms. Mack confirmed that the case was being allowed to go abandoned in response to the notice of non-responsive amendment."

Office records confirm that Ms. Mack was applicant's duly appointed and authorized representative for the present application, responsible for prosecuting the present application as directed in the oath/declaration filed with the present application on December 10, 2007. Ms. Mack filed an Amendment in reply to a non-final Office action on December 30, 2010. In response, the Office mailed the Notice of Non-Compliant Amendment on January 13, 2011.
Subsequent to the Interview Summary, the Office mailed a Notice of Abandonment on July 20, 2011. The Notice of Abandonment reiterated that Ms. Mack confirmed that the case was being allowed to go abandoned in response to the notice of non-responsive amendment.

Applicant files the present petition to revive the application. The petition is accompanied by a statement that identifies Ms. Mack as previous counsel and notes that previous counsel failed to file a reply to the

Notice. Petitioner further provides that Applicant contacted petitioner on March 11, 2011, to file a divisional application. Applicant also notes that the parent application (the present application), and the divisional application were handled by different law firms.

The petition was dismissed in a Decision mailed December 23, 2011. The Decision dismissing the petition noted that an intentional abandonment of an application, or an intentional delay in seeking the revival of an abandoned application, precludes a finding of unavoidable or unintentional delay pursuant to 37 CFR 1.137.

The present renewed petition

Applicant files the present renewed petition and avers that a request and fee for a one (1) month extension of time, along with a continuing (divisional) application, were filed on March 14, 2011. In support of this assertion, Applicant files a copy of the request and fee for a one (1) month extension of time.

Office records

A review of Office records confirms that Applicant electronically filed a request and fee for a one (1) month extension of time, along with a continuing (Divisional) application, on Monday, March 14, 2011. The Divisional application was assigned application serial number 13/047551. A review of the application papers in application no. 13/047551 reveal that the petition and fee for extension of time were filed in application serial number 13/047551, and the extension of time fee was subsequently refunded to petitioner.

The extension of time fee has been charged to Applicant's deposit account as per the petition.

Analysis and conclusion

In view of the filing of the petition and fee for a one (1) month extension of time, and the continuing application, the petition satisfies the requirements of 37 CFR 1.137(b) in that petitioner has supplied (1) the reply in the form of a continuing application under 37 CFR 1.53(b); (2) the petition fee; and (3) a proper statement of unintentional delay.

This application is being revived solely for purposes of continuity. As continuity has been established by this decision, the application is again abandoned in favor of continuation (Divisional) application No. 13/047551, filed March 14, 2011.

Telephone inquiries concerning this decision should be directed to the undersigned at (571) 272-3232.

/DLW/

Derek L. Woods
Attorney
Office of Petitions

UNITED STATES PATENT AND TRADEMARK OFFICE

Commissioner for Patents
United States Patent and Trademark Office
P.O. Box 1450
Alexandria, VA 22313-1450
www.uspto.gov

MAILED

MAR 17 2011

PCT LEGAL ADMINISTRATION

Docket Clerk
P.O. Box 802432
Dallas TX 75380

In re Application of	:	
HUSEN et al.	:	
Application No.: 11/917,043	:	DECISION ON PETITION
PCT No.: PCT/IB06/51940	:	
Int. Filing Date: 16 June 2006	:	UNDER 37 CFR 1.497(d)
Priority Date: 16 June 2005	:	
Attorney Docket No.: EIN-006259US	:	
For: RECEIVER APPARATUS FOR RECEIVING A MULTICARRIER SIGNAL	:	

This is a decision on applicant's "Petition to Correct Inventorship in a National Stage Application under 37 CFR 1.497(d)" filed in the United States Patent and Trademark Office on 14 December 2009.

BACKGROUND

On 10 December 2007, applicant filed a request for entry of international application PCT/IB06/51940 into the U.S. National stage under 35 U.S.C. 371 accompanied by the basic national fee.

On 20 May 2008, a Notification of Missing Requirements (Form PCT/DO/EO/905) was mailed to applicant indicating that an oath or declaration, in compliance with 37 CFR 1.497(a) and (b), and the surcharge for filing the oath or declaration after the thirty month period, was required.

On 15 December 2008, applicant responded to the Notification with an executed declaration. The declaration was executed by HUSEN, FILIPPI and VOORTHUISEN who were identified as inventors in the above referenced application.

On 30 July 2009, a Notification of Defective Response (Form PCT/DO/EO/916) was mailed to applicant indicating that the declaration was not in compliance with 37 CFR 1.497(a) and (b) because the inventors HUSEN, FILIPPI and VOORTHUISEN as identified on the declaration were different than that those identified in the published international application-BAGGEN, HUSEN, STASSEN, TSANG.

On 04 September 2009, applicant filed a response to the Form 916. On 10 November 2009, a decision on the response was mailed to applicant indicating that the executed declaration was not in compliance with 37 CFR 1.497(a) and (b) as the declaration did not name the inventive entities identified in the published international application. Applicant was advised that a petition under 37 CFR 1.497(d) was required to add or delete inventors in the U.S. national stage.

DISCUSSION

Where the oath or declaration filed pursuant to 35 U.S.C. 371(c)(4) and 37 CFR 1.497(d) names an inventive entity different from the inventive entity set forth in the international application, the oath or declaration must be accompanied by: (1) a statement from each person being added and each person being deleted as an inventor that any error in inventorship occurred without deceptive intention on his or her part; (2) the fee set forth in § 1.17(i); and (3) if an assignment has been executed by any of the original named inventors, the written consent of the assignee(s) (See 37 CFR 3.73(b)).

The petition under 37 CFR 1.497(d) seeks to delete Constant P.M.J. Baggen, Maurice I.A. Stassen and Hoi Y. Tsang as inventors and to add Alessio Filippi and PHJM van Voorthuisen as co-inventors in the above-identified international application. Items (1), (2) and (3) above are satisfied with respect to deleting inventors Stassen and Tsang and adding inventors Filippi and van Voorthuisen.

However, a statement from inventor Constant P.M.J. Baggen deleting him as an inventor and indicating that any error in inventorship occurred without deceptive intention on his part was not provided and is required. Counsel indicates that inventor Baggen's statement to be deleted has not yet been obtained.

Accordingly, applicant's petition under 37 CFR 1.497(d) to delete Maurice I.A. Stassen and Hoi Y. Tsang as inventors and to add Alessio Filippi and PHJM van Voorthuisen as co-inventors in the above-identified international application is granted. However, the declaration does not identify inventor Baggen and was not executed by him. Thus, the declaration is not in compliance with 37 CFR 1.497(a) and (b). A request under 37 CFR 1.497(d)(1) for deletion of inventor Baggen as an inventive entity is needed.

CONCLUSION

The petition under 37 CFR 1.497(d) delete Maurice I.A. Stassen and Hoi Y. Tsang as inventors and to add Alessio Filippi and PHJM van Voorthuisen as co-inventors in the above-captioned application is **GRANTED**.

The petition under 37 CFR 1.497(d) to delete inventor Baggen is **DISMISSED WITHOUT PREJUDICE**. Pursuant to 37 CFR 1.497(d)(1), a statement of inventor Baggen is

needed.

Any reconsideration on the merits of the renewed petition under 37 CFR §1.497(d) must be filed within TWO (2) MONTHS from the mail date of this decision. Any reconsideration request should include a cover letter entitled "Renewed Petition Under 37 CFR §1.497(d)." No petition fee is required. Any further extensions of time available may be obtained under 37 CFR 1.136(a).

Any further correspondence with respect to this matter may be filed electronically via EFS-Web selecting the document description "Petition for review and processing by the PCT Legal Office" or by mail addressed to Mail Stop PCT, Commissioner for Patents, Office of PCT Legal Administration, P.O. Box 1450, Alexandria, Virginia 22313-1450, with the contents of the letter marked to the attention of the Office of PCT Legal Administration.

/Cynthia M. Kratz/
Cynthia M. Kratz
Attorney Advisor
Office of PCT Legal Administration
Telephone: (571) 272-3286

UNITED STATES PATENT AND TRADEMARK OFFICE

Commissioner for Patents
United States Patent and Trademark Office
P.O. Box 1450
Alexandria, VA 22313-1450
www.uspto.gov

MAILED

SEP 20 2011

PCT LEGAL ADMINISTRATION

Docket Clerk
P.O. Box 802432
Dallas TX 75380

In re Application of	:	
HUSEN et al.	:	
Application No.: 11/917,043	:	DECISION ON PETITION
PCT No.: PCT/IB06/51940	:	
Int. Filing Date: 16 June 2006	:	UNDER 37 CFR 1.497(d)
Priority Date: 16 June 2005	:	
Attorney Docket No.: EIN-006259US	:	
For: RECEIVER APPARATUS FOR RECEIVING A MULTICARRIER SIGNAL	:	

This is a decision on applicant's "Petition to Correct Inventorship in a National Stage Application under 37 CFR 1.497(d)" filed in the United States Patent and Trademark Office on 18 July 2011.

BACKGROUND

On 10 December 2007, applicant filed a request for entry of international application PCT/IB06/51940 into the U.S. National stage under 35 U.S.C. 371 accompanied by the basic national fee.

On 20 May 2008, a Notification of Missing Requirements (Form PCT/DO/EO/905) was mailed to applicant indicating that an oath or declaration, in compliance with 37 CFR 1.497(a) and (b), and the surcharge for filing the oath or declaration after the thirty month period, was required.

On 15 December 2008, applicant responded to the Notification with an executed declaration. The declaration was executed by HUSEN, FILIPPI and VOORTHUISEN who were identified as inventors in the above referenced application.

On 30 July 2009, a Notification of Defective Response (Form PCT/DO/EO/916) was mailed to applicant indicating that the declaration was not in compliance with 37 CFR 1.497(a) and (b) because the inventors HUSEN, FILIPPI and VOORTHUISEN as identified on the declaration were different than that those identified in the published international application- BAGGEN, HUSEN, STASSEN, TSANG.

On 04 September 2009, applicant filed a response to the Form 916. On 10 November 2009, a decision on the response was mailed to applicant indicating that the executed declaration was not in compliance with 37 CFR 1.497(a) and (b) as the declaration did not name the

inventive entities identified in the published international application. Applicant was advised that a petition under 37 CFR 1.497(d) was required to add or delete inventors in the U.S. national stage.

On 14 December 2009, applicant filed a petition under 37 CFR 1.497(d). On 17 March 2011, a decision was mailed to applicant, deleting inventors Stassen and Tsang and adding inventors Filippi and van Voorthuisen. However, a statement from inventor Constant P.M.J. Baggen deleting him as an inventor and indicating that any error in inventorship occurred without deceptive intention on his part was not provided and was required.

DISCUSSION

Where the oath or declaration filed pursuant to 35 U.S.C. 371(c)(4) and 37 CFR 1.497(d) names an inventive entity different from the inventive entity set forth in the international application, the oath or declaration must be accompanied by: (1) a statement from each person being added and each person being deleted as an inventor that any error in inventorship occurred without deceptive intention on his or her part; (2) the fee set forth in § 1.17(i); and (3) if an assignment has been executed by any of the original named inventors, the written consent of the assignee(s) (See 37 CFR 3.73(b)).

Items (1), (2) and (3) above were previously satisfied with respect to deleting inventors Stassen and Tsang and adding inventors Filippi and van Voorthuisen. A statement from inventor Constant P.M.J. Baggen deleting him as an inventor and indicating that any error in inventorship occurred without deceptive intention on his part has now been obtained and submitted.

Accordingly, applicant's petition under 37 CFR 1.497(d) to delete inventor Baggen is granted.

CONCLUSION

The petition under 37 CFR 1.497(d) to delete Constant P.M.J. Baggen as co-inventor in the above-captioned application is **GRANTED**. The declaration submitted on 15 December 2008 is acceptable and in compliance with 37 CFR 1.497.

The application will be forwarded to the United States Designated/Elected Office for further processing. The 35 U.S.C. 371(c)(1), (c)(2) and (c)(4) date is 15 December 2008.

/Cynthia M. Kratz/
Cynthia M. Kratz
Attorney Advisor
Office of PCT Legal Administration
Telephone: (571) 272-3286

UNITED STATES PATENT AND TRADEMARK OFFICE

Commissioner for Patents
United States Patent and Trademark Office
P.O. Box 1450
Alexandria, VA 22313-1450
www.uspto.gov

TAROLLI, SUNDHEIM, COVELL & TUMMINO L.L.P.
1300 EAST NINTH STREET, SUITE 1700
CLEVELAND OH 44114

MAILED

JUN 09 2011

OFFICE OF PETITIONS

In re Application of	:	
Yoon-Hwa Park	:	
Application No. 11/917,051	:	DECISION GRANTING PETITION
Filed: December 10, 2007	:	UNDER 37 CFR 1.313(c)(2)
Attorney Docket No. 319203US3PCT	:	

This is a decision on the petition under 37 CFR 1.313(c)(2), filed June 8, 2011, to withdraw the above-identified application from issue after payment of the issue fee.

The petition is **GRANTED**.

The above-identified application is withdrawn from issue for consideration of a submission under 37 CFR 1.114 (request for continued examination). *See* 37 CFR 1.313(c)(2).

Petitioner is advised that the issue fee paid on May 4, 2011 cannot be refunded. If, however, this application is again allowed, petitioner may request that it be applied towards the issue fee required by the new Notice of Allowance.[1]

Telephone inquiries should be directed to the undersigned at (571) 272-3208.

This application is being referred to Technology Center AU 3677 for processing of the request for continued examination under 37 CFR 1.114 and for consideration of the concurrently filed IDS.

/Karen Creasy/
Karen Creasy
Petitions Examiner
Office of Petitions

---

[1] *The request to apply the issue fee to the new Notice may be satisfied by completing and returning the new Part B – Fee(s) Transmittal Form (along with any balance due at the time of submission). Petitioner is advised that the Issue Fee Transmittal Form* ***must*** *be completed and timely submitted to avoid abandonment of the application.*

2 3 SEP 2010

United States Patent and Trademark Office

Commissioner for Patents
United States Patent and Trademark Office
P.O. Box 1450
Alexandria, VA 22313-1450
www.uspto.gov

NXP, B.V.
NXP INTELLECTUAL PROPERTY & LICENSING
M/S41-SJ
1109 MCKAY DRIVE
SAN JOSE CA 95131

In re Application of	:	
Wood et al.	:	
Application No. 11/917,106	:	
PCT No.: PCT/IB2006/052016	:	
Int. Filing Date: 21 June 2006	:	DECISION
Priority Date: 21 June 2005	:	
Atty. Docket No.: 00 1547 US2	:	
For: Method For Parallel Data Integrity	:	
Checking Of PCI Express Devices	:	

This is in response to the petition under 37 CFR 1.182 filed on 22 July 2010.

BACKGROUND

This international application was filed on 21 June 2006, claimed an earlier priority date of 21 June 2005, and designated the U.S. The International Bureau transmitted a copy of the published international application to the USPTO on 28 December 2006. The 30 month time period for paying the basic national fee in the United States expired at midnight on 21 December 2007. Applicants filed, *inter alia*, the basic national fee on 10 December 2007.

On 14 May 2010, a Notification of Missing Requirements (Form PCT/DO/EO/905) was mailed to applicants, requiring an oath or declaration compliant with 37 CFR 1.497(a) and (b) and the surcharge under 37 CFR 1.492(h), as well as $220.00 in claims fees.

On 14 July 2010, applicants filed a response.

On 21 July 2010, a Notification of Defective Response (Form PCT/DO/EO/916) was mailed to applicants, indicating that the declaration filed on 14 July 2010 was defective due to a discrepancy in the name of one of the inventors.

DISCUSSION

Inspection of the published international application reveals that it nominates "Wood, Casey" and "Caesar, Bob" instead of "Sam C. Wood" and "Robert J. Caesar Jr." named in the declaration filed on 14 July 2010. Said declaration was accompanied by statements from Messrs. Wood and Caesar to the effect that they were inventors of the above-identified application but their names were not set forth accurately therein. MPEP 605.04(b) states in part that

> *Except for correction of a typographical or transliteration error in the spelling of an inventor's name, a request to have the name changed from the typewritten version to the signed version or*

any other corrections in the name of the inventor(s) will not be entertained, unless accompanied by a petition under 37 CFR 1.182 together with an appropriate petition fee.

In that the requested change clearly represents more than the correction of a typographical or transliteration error, a formal petition under 37 CFR 1.182 would be required in order for the change to be accepted. Any such petition should be accompanied by a first-hand statement, preferably by the inventor herself, stating the relevant facts. Here, applicants have filed such a petition, supported by statements by the inventors. Based on the totality of the evidence of record, including the inventors' statements, it would be appropriate to accept petitioner's explanations of the discrepancies in the inventors' names.

DECISION

The petition under 37 CFR 1.182 is **GRANTED**.

The declaration filed on 14 July 2010 is **ACCEPTED** for purposes of compliance with 37 CFR 1.497(a) and (b).

This application is being forwarded to the Office of Patent Application Processing. Its date under 35 U.S.C. 371(c)(1), (2) and (4) is **14 July 2010**.

/George Dombroske/
George Dombroske
PCT Legal Examiner
Office of PCT Legal Administration
Tel: (571) 272-3283

UNITED STATES PATENT AND TRADEMARK OFFICE

Commissioner for Patents
United States Patent and Trademark Office
P.O. Box 1450
Alexandria, VA 22313-1450
www.uspto.gov

MAILED

DEC 06 2010

PCT LEGAL ADMINISTRATION

DAVID A. EINHORN
BAKER & HOSTETLER, LLP
45 ROCKEFELLER PLAZA
NEW YORK NY 10111

In re Application of	:	
SHIN, Ji-Hoon	:	
Application No.: 11/917,159	:	DECISION
PCT No.: PCT/KR2007/003567	:	
Int. Filing Date: 25 July 2007	:	
Priority Date: 23 February 2007	:	
Attorney Docket No.: DE1786	:	
For: DISCOUNT PAYMENT METHOD AND	:	
SYSTEM USING A TEMPORARY CARD NUMBER	:	

This decision is in response to applicant's petition under 37 CFR 1.137(b) filed 17 August 2010 in the United States Patent and Trademark Office (USPTO).

BACKGROUND

On 25 July 2007, applicant filed international application PCT/KR2007/003567 which designated the U.S. and claimed a priority date of 23 February 2007. A copy of the international application was communicated to the USPTO from the International Bureau on 28 August 2008. The thirty-month period for paying the basic national fee in the United States expired at midnight on 24 August 2009 (23 August 2009 being a Sunday).

On 11 December 2007, applicant filed a transmittal letter for entry into the national stage in the United States, which was accompanied by, *inter alia*, the U.S. Basic National Fee and a declaration of the inventor.

On 10 August 2009, the United States Designated/Elected Office (DO/EO/US) mailed a Notification of Insufficient Fees (Form PCT/DO/EO/923) indicating, *inter alia*, that additional claim fees of $324 were required. The Notification set a two-month extendable time period.

On 08 July 2010, the DO/EO/US mailed a NOTIFICATION OF ABANDONMENT (Form PCT/DO/EO/909) indicating that the application was abandoned as to the United States of America for failure to respond to the Notification mailed 10 August 2009.

On 17 August 2010, applicant filed the instant petition under 37 CFR 1.137(b).

DISCUSSION

A petition to revive the present application under 37 CFR 1.137(b) must include:

(1) The required reply;
(2) The petition fee;
(3) A statement that the entire delay in filing the required reply from the due date for the reply until the filing of a grantable petition was unintentional.

As to item (1), authorization to charge the $324 in additional claim fees to Deposit Account 50-4581 was provided on 17 August 2010.

As to item (2), applicant submitted the petition fee on 17 August 2010.

As to item (3), the required statement has been provided.

A review of the application file reveals that, with the filing of the present petition and accompanying papers, a proper response has been submitted and all of the requirements of 37 CFR 1.137(b) for revival have been satisfied and revival is therefore appropriate.

CONCLUSION

The petition under 37 CFR 1.137(b) is **GRANTED** for the reasons set forth above.

This application is being forwarded to the National Stage Processing Branch of the Office of PCT Operations to continue national stage processing of the application.

/Daniel Stemmer/

Daniel Stemmer
Legal Examiner
PCT Legal Affairs
Office of Patent Cooperation Treaty
Legal Administration
Telephone: (571) 272-3301

UNITED STATES PATENT AND TRADEMARK OFFICE

Commissioner for Patents
United States Patent and Trademark Office
P.O. Box 1450
Alexandria, VA 22313-1450
www.uspto.gov

HILDEBRAND, CHRISTA
NORRIS MCLAUGHLIN & MARCUS PA
875 THIRD AVENUE, 8TH FLOOR
NEW YORK, NY 10022

MAILED

JAN 11 2011

OFFICE OF PETITIONS

In re Application of	:	
Husemann et al.	:	
Application No. 11/917,243	:	DECISION ON PETITION
Filed: March 25, 2008	:	
Attorney Docket No. 101769-432	:	

This is a decision on the petition 37 C.F.R. § 1.137(a), filed October 28, 2010, to revive the above-identified application. In view of the assertion of nonreceipt of the Office action and the evidence submitted in support thereof, the petition is alternatively treated as a petition under 37 CFR 1.181 requesting the withdrawal of the holding of abandonment.

The petition under 1.181 is **GRANTED**.

This application was held abandoned for failure to reply to the Notice of Non-Compliant Amendment, mailed April 14, 2010, which set a shortened statutory period for reply of one (1) month or thirty (30) days (whichever is later). A Notice of Abandonment was mailed on October 21, 2010.

Petitioner asserts that the Notice dated April 14, 2010, was not received.

A review of the written record indicates no irregularity in the mailing of the Office action and, in the absence of any irregularity, there is a strong presumption that the Office action was properly mailed to the practitioner at the address of record. This presumption may be overcome by a showing that the Office action was not in fact received. In this regard, the showing required to establish the failure to receive the Office action must consist of the following:

> (1) A statement from the practitioner describing the system used for recording an Office action received at the correspondence address of record with the USPTO. The statement should establish that the docketing system is sufficiently reliable.
>
> (2) A statement from the practitioner that the Office action was not received at the correspondence address of record, and that a search of the practitioner's record(s), including any file jacket or the equivalent, and the application contents, indicates that the Office action was not received.

(3) A copy of the record(s) used by the practitioner where the non-received Office action would have been entered had it been received is required. A copy of the practitioner's record(s) required to show non-receipt of the Office action should include the master docket for the firm.

See MPEP § 711.03(c) under subheading "Petition to Withdraw Holding of Abandonment Based on Failure to Receive Office Action," and "Withdrawing the Holding of Abandonment When Office Actions Are Not Received," 1156 Official Gazette 53 (November 16, 1993).

The petition satisfies the above-stated requirements. The Notice of Abandonment is hereby vacated and the holding of abandonment withdrawn.

In view of the above, the petition under 1.137(a) is **DISMISSED.**

The petition fee of $540 will not be charged to petitioner's deposit account.

This application is being referred to Technology Center AU 1788 for appropriate action in the normal course of business on the reply filed October 28, 2010.

Telephone inquiries concerning this decision should be directed to Alicia Kelley at (571) 272-6059.

/Carl Friedman/
Carl Friedman
Petitions Examiner
Office of Petitions

UNITED STATES PATENT AND TRADEMARK OFFICE

Commissioner for Patents
United States Patent and Trademark Office
P.O. Box 1450
Alexandria, VA 22313-1450
www.uspto.gov

Decision Date : March 1, 2012

In re Application of :

Ken Mayer

Application No : 11917245

Filed : 25-Nov-2008

Attorney Docket No : 94682.911F-US

DECISION ON REQUEST TO WITHDRAW AS ATTORNEY/AGENTOF RECORD

This is an electronic decision on the Request to Withdraw as attorney or agent of record under 37 CFR § 1.36(b), filed March 1, 2012

The request is **APPROVED.**

The request was signed by Frank Weyer (registration no. 33050) on behalf of all attorneys/agents associated with Customer Number 22804 . All attorneys/agents associated with Cusotmer Number 22804 have been withdrawn.

Since there are no remaining attorneys of record, all future communications from the Office will be directed to the first named inventor or assignee that has properly made itself of record pursuant to 37 CFR 3.71, with correspondence address:

Name	Ken Mayer
Name2	Wordclick, LLC
Address 1	318 S. Cochran Avenue
Address 2	
City	Los Angeles
State	CA
Postal Code	90036
Country	US

As a reminder, requester is required to inform the first named inventor or assignee that has properly made itself of record pursuant to 37 CFR 3.71 of the electronically processed petition.

Telephone inquiries concerning this decision should be directed to the Patent Electronic Business Center (EBC) at 866-217-9197.

Office of Petitions

Doc Code: PET.AUTO **Document Description: Petition automatically granted by EFS-Web**	PTO/SB/83 U.S. Patent and Trademark Office Department of Commerce

Electronic Petition Request	**REQUEST FOR WITHDRAWAL AS ATTORNEY OR AGENT AND CHANGE OF CORRESPONDENCE ADDRESS**
Application Number	11917245
Filing Date	25-Nov-2008
First Named Inventor	Ken Mayer
Art Unit	2175
Examiner Name	ANDREW TANK
Attorney Docket Number	94682.911F-US
Title	METHOD AND SYSTEM FOR AUTOMATED INITIATION OF SEARCH QUERIES FROM COMPUTER DISPLAYED CONTENT

◉ Please withdraw me as attorney or agent for the above identified patent application and the practitioners of record associated with Customer Number: 22804

The reason(s) for this request are those described in 37 CFR:

10.40(c)(1)(vi)

Certifications

☒ I/We have given reasonable notice to the client, prior to the expiration of the response period, that the practitioner(s) intend to withdraw from employment

☒ I/We have delivered to the client or a duly authorized representative of the client all papers and property (including funds) to which the client is entitled

☒ I/We have notified the client of any responses that may be due and the time frame within which the client must respond

Change the correspondence address and direct all future correspondence to the first named inventor or assignee that has properly made itself of record pursuant to 37 CFR 3.71:

Name	Ken Mayer Wordclick, LLC
Address	318 S. Cochran Avenue
City	Los Angeles
State	CA
Postal Code	90036
Country	US

I am authorized to sign on behalf of myself and all withdrawing practitioners.	
Signature	/Frank Weyer/
Name	Frank Weyer
Registration Number	33050

UNITED STATES PATENT AND TRADEMARK OFFICE

Commissioner for Patents
United States Patent and Trademark Office
P.O. Box 1450
Alexandria, VA 22313-1450
www.uspto.gov

VARNUM, RIDDERING, SCHMIDT & HOWLETT LLP
333 BRIDGE STREET, NW
P.O. BOX 352
GRAND RAPIDS MI 49501-0352

MAILED
APR 13 2011
OFFICE OF PETITIONS

In re Application of :
Norman Byrne :
Application No.11/917,258 :
Filed: December 12, 2007 :
Attorney Docket No. Byrne :
P256US1-DCA

DECISION ON PETITION

This is a decision on the petition under the unintentional provisions of 37 CFR 1.137(b), filed March 4, 2011, to revive the above-identified application.

The petition is **GRANTED.**

This application became abandoned for failure to timely file a reply within the meaning of 37 CFR 1.113 to the final Office action of March 5, 2010. The proposed reply required for consideration of a petition to revive must be a Notice of Appeal (and appeal fee required by 37 CFR 41.20(b)(2)), an amendment that *prima facie* places the application in condition for allowance, a Request for Continued Examination (RCE) and submission (37 CFR 1.114), or the filing of a continuing application under 37 CFR 1.53(b). See MPEP 711.03(c)(III)(A)(2). No extension of time pursuant to the provisions of 37 CFR 1.136(a) was obtained. Accordingly, the date of abandonment of this application is June 6, 2010.

The petition satisfies the requirements of 37 CFR 1.137(b) in that petitioner has supplied (1) the reply in the form of the Notice of Appeal and fee; (2) the petition fee of $810.00; and (3) a proper statement of unintentional delay.

The two-month period for filing an appeal brief under 37 CFR 41.37(a)(1), accompanied by the fee required by 37 CFR 41.20(b)(2), runs from the date of this decision.

Telephone inquiries concerning this decision should be directed to the undersigned at (571) 272-3215.

This application is being referred to Technology Center AU 2839 for processing in the normal course of business.

Charlema Grant
Petitions Attorney
Office of Petitions

UNITED STATES PATENT AND TRADEMARK OFFICE

UNITED STATES DEPARTMENT OF COMMERCE
United States Patent and Trademark Office
Address: COMMISSIONER FOR PATENTS
P.O. Box 1450
Alexandria, Virginia 22313-1450
www.uspto.gov

APPLICATION NO.	FILING DATE	FIRST NAMED INVENTOR	ATTORNEY DOCKET NO.	CONFIRMATION NO.
11/917,309	12/12/2007	Kai Schiemann	MERCK-3392	5026

23599 7590 11/08/2011
MILLEN, WHITE, ZELANO & BRANIGAN, P.C.
2200 CLARENDON BLVD.
SUITE 1400
ARLINGTON, VA 22201

EXAMINER
CHANDRAKUMAR, NIZAL S

ART UNIT	PAPER NUMBER
1625	

NOTIFICATION DATE	DELIVERY MODE
11/08/2011	ELECTRONIC

Please find below and/or attached an Office communication concerning this application or proceeding.

The time period for reply, if any, is set in the attached communication.

Notice of the Office communication was sent electronically on above-indicated "Notification Date" to the following e-mail address(es):

docketing@mwzb.com

UNITED STATES PATENT AND TRADEMARK OFFICE

Commissioner for Patents
United States Patent and Trademark Office
P.O. Box 1450
Alexandria, VA 22313-1450
www.uspto.gov

NOV - 8 2011

MILLEN, WHITE, ZELANO & BRANIGAN, P.C.
2200 CLARENDON BLVD.
SUITE 1400
ARLINGTON VA 22201

In re Application of:	:	
Schiemann et al.	:	
Serial No.: 11/917,309	:	PETITION DECISION
Filed: December 12, 2007	:	
Attorney Docket No.: **MERCK-3392**	:	

This is in response to the Petition filed by applicants under 37 CFR § 1.181 on October 18, 2011, requesting the removal of the finality of the Office action of August 23, 2011.

BACKGROUND

A new final Office action has been mailed November 7, 2011 which is subsequent to the petition of October 18, 2011.

DECISION

The petition is **DISMISSED AS MOOT** in view of the new final Office action of November 7, 2011.

Should there be any questions about this decision please contact Marianne C. Seidel, by letter addressed to Director, TC 1600, at the address listed above, or by telephone at 571-272-0584 or by facsimile sent to the general Office facsimile number, 571-273-8300.

/MC Seidel/
Marianne C. Seidel, Quality Assurance Specialist
Technology Center 1600

UNITED STATES PATENT AND TRADEMARK OFFICE

Commissioner for Patents
United States Patent and Trademark Office
P.O. Box 1450
Alexandria, VA 22313-1450
www.uspto.gov

MERCK
P O BOX 2000
RAHWAY NJ 07065-0907

MAILED
SEP 08 2011
OFFICE OF PETITIONS

In re Application of	:	
Edward Baker	:	
Application No. 11/917,456	:	DECISION ON PETITION
Filed: December 13, 2007	:	
Attorney Docket No. 2005.906US	:	

This is a decision on the petition under the unintentional provisions of 37 CFR 1.137(b), filed August 30, 2011, to revive the above-identified application.

The petition is **GRANTED**.

The application became abandoned for failure to reply in a timely manner to the final Office action mailed February 17, 2011, which set a shortened statutory period for reply of three (3) months. No extensions of time under the provisions of 37 CFR 1.136(a) were obtained. Accordingly, the application became abandoned on May 18, 2011. A Notice of Abandonment was mailed August 30, 2011.

The petition satisfies the requirements of 37 CFR 1.137(b) in that petitioner has supplied (1) the reply in the form of a Notice of Appeal, with the required fee of $540, (2) the petition fee of $1,620, and (3) a proper statement of unintentional delay. Accordingly the Notice of Appeal is accepted as being unintentionally delayed.

The two-month period for filing an appeal brief under 37 CFR 41.37 (accompanied by the fee required by 37 CFR 41.20(b)(2)), runs from the date of this decision.

The application file does not indicate a change of address has been filed in this case, although the address given on the petition differs from the address of record. A change of address should be filed in this case in accordance with MPEP 601.03. A courtesy copy of this decision is being mailed to the address noted on the petition. However, until otherwise instructed, all future correspondence regarding this application will be mailed solely to the address of record.

An extension of time under 37 CFR 1.136 must be filed prior to the expiration of the maximum extendable period for reply. *See* In re Application of S., 8 USPQ2d 1630, 1631 (Comm'r Pats. 1988). Since the $1,110 extension of time fee submitted with the petition on August 30, 2011 was subsequent to the maximum extendable period for reply, this fee is unnecessary and will be credited to petitioner's deposit account.

Telephone inquiries concerning this decision should be directed to Kimberly Inabinet at (571) 272-4618.

This application is being referred to the Board of Patent Appeals and Interferences for appropriate action in the normal course of business for processing of the reply received August 30, 2011.

/Kimberly Inabinet/

Kimberly Inabinet
Petitions Examiner
Office of Petitions

cc: Susan L. Hess
Merck, Sharp & Dohme Corp.
126 East Lincoln Avenue
Rahway, NJ 07065

UNITED STATES PATENT AND TRADEMARK OFFICE

Commissioner for Patents
United States Patent and Trademark Office
P.O. Box 1450
Alexandria, VA 22313-1450
www.uspto.gov

WESTERMAN, HATTORI, DANIELS & ADRIAN, LLP
1250 CONNECTICUT AVENUE, NW
SUITE 700
WASHINGTON DC 20036

MAILED

AUG 17 2010

OFFICE OF PETITIONS

ON PETITION

In re Patent No. 7,734,447 :
Issue Date: June 8, 2010 :
Application No. 11/917,459 :
Filed: December 13, 2007 :
Attorney Docket No. 072379 :

This is a decision on the petition filed July 28, 2010, which is being treated as a request under 37 CFR 3.81(b)[1] to correct the name of the assignee on the front page of the above-identified patent by way of a Certificate of Correction.

The request is **GRANTED**.

Petitioner states that the correct assignee's name is "**National Institute of Radiological Sciences, Chiba (JP); Aloka Co., Ltd., Tokyo (JP)**" and that the incorrect assignee's name was included on the Fee(s) Transmittal form PTOL-85(b) at the time of payment of the issue fee. Accordingly, petitioner requests that a certificate of correction be issued to reflect the correct assignee on the front page of the Letters Patent in the patent to be issued from the application.

Telephone inquiries concerning this decision may be directed to the JoAnne Burke at (571) 272-4584. Inquiries regarding the issuance of a certificate of correction should be directed to the Certificate of Correction Branch at (571) 272-4200.

The Certificates of Correction Branch will be notified of this decision granting the petition under 37 CFR 3.81(b) and directing issuance of the requested Certificate of Correction.

JoAnne Burke
Petitions Examiner
Office of Petitions

[1] *See* MPEP 1309, subsection II; and Official Gazette of June 22, 2004.

UNITED STATES PATENT AND TRADEMARK OFFICE

UNITED STATES DEPARTMENT OF COMMERCE
United States Patent and Trademark Office
Address: COMMISSIONER FOR PATENTS
P.O. Box 1450
Alexandria, Virginia 22313-1450
www.uspto.gov

APPLICATION NO.	FILING DATE	FIRST NAMED INVENTOR	ATTORNEY DOCKET NO.	CONFIRMATION NO.
11/917,477	11/24/2009	Bingbing Yao	10195-0027	6922

7590 09/07/2010
Huawei Technologies Co., Ltd./Finnegan
901 New York Avenue
NW
Washington, DC 20001

EXAMINER
BOST, DWAYNE D

ART UNIT	PAPER NUMBER
2617	

MAIL DATE	DELIVERY MODE
09/07/2010	PAPER

DECISION DISMISSING PETITION UNDER 37 CFR 1.138(d)

The declaration of express abandonment will not be recognized

This is in response to the petition under 37 CFR 1.138(d), requesting for a refund of any previously paid search fee and excess claims fee in the above-identified application.

The petition is dismissed.

The express abandonment will **not** be recognized for the reason(s) indicated below:

1. ☐ The petition was not filed in sufficient time to permit the appropriate officials to recognize the abandonment before an examination has been made of the application. See 37 CFR 1.138(d).

2. ☐ The petition was not signed by a party authorized by 37 CFR 1.33(b)(1), (3) or (4).

3. ☒ The application is not an application filed under 35 U.S.C. 111(a) on or after December 8, 2004.

4. ☐ The petition for express abandonment under 1.138(d) is dismissed because the applicant did not pay any search fee and excess claims fees in the above-identified application.

Telephone inquiries should be directed to the Office of Data Management at (571) 272-4200.

Betty Powell

Patent Publication Branch
Office of Data Management

FORM PET651D (Rev. 08/07)

UNITED STATES PATENT AND TRADEMARK OFFICE

UNITED STATES DEPARTMENT OF COMMERCE
United States Patent and Trademark Office
Address: COMMISSIONER FOR PATENTS
P.O. Box 1450
Alexandria, Virginia 22313-1450
www.uspto.gov

APPLICATION NO.	FILING DATE	FIRST NAMED INVENTOR	ATTORNEY DOCKET NO.	CONFIRMATION NO.
11/917,477	11/24/2009	Bingbing Yao	10195-0027	6922

7590 10/29/2010
Huawei Technologies Co., Ltd./Finnegan
901 New York Avenue
NW
Washington, DC 20001

EXAMINER
NGUYEN, KHAI MINH

ART UNIT	PAPER NUMBER
2617	

MAIL DATE	DELIVERY MODE
10/29/2010	PAPER

DECISION DISMISSING PETITION UNDER 37 CFR 1.138(d)

The declaration of express abandonment will not be recognized

This is in response to the petition under 37 CFR 1.138(d), requesting for a refund of any previously paid search fee and excess claims fee in the above-identified application.

The petition is dismissed.

The express abandonment will **not** be recognized for the reason(s) indicated below:

1. ☐ The petition was not filed in sufficient time to permit the appropriate officials to recognize the abandonment before an examination has been made of the application. See 37 CFR 1.138(d).
2. ☐ The petition was not signed by a party authorized by 37 CFR 1.33(b)(1), (3) or (4).
3. ☑ The application is not an application filed under 35 U.S.C. 111(a) on or after December 8, 2004.
4. ☐ The petition for express abandonment under 1.138(d) is dismissed because the applicant did not pay any search fee and excess claims fees in the above-identified application.

Telephone inquiries should be directed to the Office of Data Management at (571) 272-4200.

Kaletris Buchanan
Patent Publication Branch
Office of Data Management

FORM PET651D (Rev. 08/07)

UNITED STATES PATENT AND TRADEMARK OFFICE

Commissioner for Patents
United States Patent and Trademark Office
P.O. Box 1450
Alexandria, VA 22313-1450
www.uspto.gov

MCDERMOTT WILL & EMERY
600 13TH STREET, NW
WASHINGTON DC 20005-3096

MAILED
MAY 23 2011
OFFICE OF PETITIONS

In re Application of	:	
RISK	:	
Application No. 11/917,572	:	DECISION ON PETITION
Filed: July 18, 2008	:	TO MAKE SPECIAL UNDER
Attorney Docket No. 074225-013 (CGRK-001)	:	37 CFR 1.102(c)(1)
	:	

This is a decision on the petition under 37 CFR 1.102(c)(1), filed April 21, 2011, to make the above-identified application special based on applicant's age as set forth in M.P.E.P. § 708.02, Section IV.

The petition is **GRANTED**.

A grantable petition to make an application special under 37 CFR 1.102(c)(1) and MPEP § 708.02, Section IV: Applicant's Age must be accompanied by evidence showing that at least one of the applicants is 65 years of age, or more, such as a birth certificate or a statement by applicant. No fee is required

The instant petition includes a photocopy of the applicant driver's license. Accordingly, the above-identified application has been accorded "special" status.

Telephone inquiries concerning this decision should be directed to the undersigned at (571) 272-6735.

All other inquiries concerning either the examination or status of the application should be directed to the Technology Center at (571) 272-1600.

The application is being returned to Technology Center Art Unit 1644 for action on the merits commensurate with this decision.

/Diane C. Goodwyn/
Diane C. Goodwyn
Petitions Examiner
Office of Petitions

SPE RESPONSE FOR CERTIFICATE OF CORRECTION

DATE : 03/16/12

TO SPE OF : ART UNIT 1774

SUBJECT : Request for Certificate of Correction for Appl. No.: 11917780 Patent No.: 8097570

CofC mailroom date: 03/05/12

Please respond to this request for a certificate of correction within 7 days.

FOR IFW FILES:

Please review the requested changes/corrections as shown in the **COCIN** document(s) in the IFW application image. No new matter should be introduced, nor should the scope or meaning of the claims be changed.

Please complete the response (see below) and forward the completed response to scanning using document code **COCX**.

FOR PAPER FILES:

Please review the requested changes/corrections as shown in the attached certificate of correction. Please complete this form (see below) and forward it with the file to:

Certificates of Correction Branch (CofC)
Randolph Square – 9D10-A
Palm Location 7580
You can fax the Directors/SPE response to 571-273-3421

Note: **Should the changes to claim 8 be approved?**

Lamonte Newsome

Certificates of Correction Branch

571-272-3421

Thank You For Your Assistance

The request for issuing the above-identified correction(s) is hereby:
Note your decision on the appropriate box.

SPE RESPONSE FOR CERTIFICATE OF CORRECTION

☑ **Approved** — **All** changes apply.

☐ **Approved in Part** — Specify below which changes **do not** apply.

☐ **Denied** — State the reasons for denial below.

Comments: All changes are approved including the change to claim 8.

/Walter D. Griffin/ — 1774

SPE — **Art Unit**

UNITED STATES PATENT AND TRADEMARK OFFICE

Commissioner for Patents
United States Patent and Trademark Office
P.O. Box 1450
Alexandria, VA 22313-1450
www.uspto.gov

MAILED

SEP 28 2010

OFFICE OF PETITIONS

FOLEY AND LARDNER LLP
SUITE 500
3000 K STREET NW
WASHINGTON, DC 20007

In re Application of	:	
Hochfield et al.	:	DECISION ON PETITION
Application No. 11/917,793	:	TO WITHDRAW
Filed: June 3, 2008	:	FROM RECORD
Attorney Docket: 136024-1003	:	

This is a decision on the Request to Withdraw as attorney or agent of record under 37 C.F.R. § 1.36(b), filed July 30, 2010.

The request is **NOT APPROVED** because it is moot.

A review of the file record indicates that Foley and Lardner LLP were revoked as power of attorney by the assignee of the patent application on August 6, 2010. Accordingly, the request to withdraw under 37 C.F.R. § 1.36(b) is moot.

All future communications from the Office will continue to be directed to the below-listed address until otherwise notified by applicant.

Telephone inquires concerning this decision should be directed to the undersigned at 571-272-6059.

A. Kelley

Alicia Kelley
Petitions Examiner
Office of Petitions

cc: GARDERE WYNNE SEWELL LLP
INTELLECTUAL PROPERTY SECTION
3000 THANKSGIVING TOWER
1601 ELM ST
DALLAS, TX 75201-4761

UNITED STATES PATENT AND TRADEMARK OFFICE

Commissioner for Patents
United States Patent and Trademark Office
P.O. Box 1450
Alexandria, VA 22313-1450
www.uspto.gov

LEYDIG VOIT & MAYER, LTD
TWO PRUDENTIAL PLAZA, SUITE 4900
180 NORTH STETSON AVENUE
CHICAGO IL 60601-6731

MAILED

MAR 06 2012

PCT LEGAL ADMINISTRATION

In re Application of	:	
FUJII, et al.	:	
Application No.: 11/917,817	:	DECISION ON PETITION
PCT No.: PCT/JP2006/312079	:	
Int. Filing Date: 09 June 2006	:	UNDER 37 CFR 1.181
Priority Date: 17 June 2005	:	
Atty Docket No.: 702368	:	
For: METHOD FOR ANALYSIS OF NKT CELL FUNCTION	:	

This decision is in response to applicant's "REQUEST FOR CORRECTED NOTICE OF ACCEPTANCE OF APPLICATION" filed 10 July 2009 in the United States Patent and Trademark Office (USPTO). The request is being treated as a petition under 37 CFR 1.181 to assign a 35 U.S.C. 371 date of 14 February 2008. No petition fee is required.

On 09 June 2009, applicant was mailed a Form PCT/DO/EO/903 which identified the 35 U.S.C. 371(c)(1), (c)(2) and (c)(4) date and the date of completion of all 35 U.S.C. 371 requirements as 14 December 2008. Applicant was concurrently mailed a filing receipt which listed the "filing or 371 (c) date" as "12/14/2008." Applicant seeks correction to 14 February 2008.

A review of the application file finds that the last of the 35 U.S.C. 371 requirements, the executed declaration of the inventors, was filed was filed on 14 February 2008. As such it is proper to **GRANT** applicant's petition at this time.

The Form PCT/DO/EO/903 mailed 09 June 2009 is hereby **VACATED**.

The application has an international filing date of 09 June 2006 under 35 U.S.C. 363 and will be given a date of **14 February 2008** under 35 U.S.C. 371(c)(1), (c)(2) and (c)(4).

This application is being returned to the United States Designated/Elected Office (DO/EO/US) for treatment in accordance with this decision; including the mailing of a corrected Form PCT/DO/EO/903 and Official Filing Receipt.

Derek A. Putonen
Attorney Advisor
Office of PCT Legal Administration
Tel: (571) 272-3294

UNITED STATES PATENT AND TRADEMARK OFFICE

UNITED STATES DEPARTMENT OF COMMERCE
United States Patent and Trademark Office
Address: COMMISSIONER FOR PATENTS
P.O. Box 1450
Alexandria, Virginia 22313-1450
www.uspto.gov

APPLICATION NO.	FILING DATE	FIRST NAMED INVENTOR	ATTORNEY DOCKET NO.	CONFIRMATION NO.
11/917,855	07/22/2008	Michael M. Thornton	SIM0102	1208

832 7590 05/18/2011
BAKER & DANIELS LLP
111 E. WAYNE STREET
SUITE 800
FORT WAYNE, IN 46802

EXAMINER
THOMAS, COURTNEY D

ART UNIT	PAPER NUMBER
2882	

MAIL DATE	DELIVERY MODE
05/18/2011	PAPER

Please find below and/or attached an Office communication concerning this application or proceeding.

The time period for reply, if any, is set in the attached communication.

UNITED STATES PATENT AND TRADEMARK OFFICE

Commissioner for Patents
United States Patent and Trademark Office
P.O. Box 1450
Alexandria, VA 22313-1450
www.uspto.gov

Paper No. 05102011

BAKER & DANIELS LLP
111 E. WAYNE STREET, SUITE 800
FORT WAYNE, IN 46802

In re Application of:	:	
Michael M. Thornton	:	DECISION TO WITHDRAW
Application No. 11/917,855	:	HOLDING
Filed: July 22, 2008	:	OF ABANDONMENT
Attorney Docket No. SIM0102	:	

This decision is in response to the communication filed on September 21, 2009, requesting that the Notice of Abandonment be withdrawn. The communication has been treated as a petition to withdraw the holding of abandonment under 37 CFR § 1.181 for which no fee is required.

The petition is **granted.**

The application was held abandoned for failure to submit a proper reply to the Office action mailed February 23, 2009. A Notice of Abandonment was mailed on September 3, 2009.

Petitioner asserts that a response was timely filed in the above-identified application. To support this assertion, petitioner has submitted a copy of the response and a copy of a return postcard which properly identifies and acknowledges timely receipt of each item of the response by the Patent and Trademark Office on August 27, 2009.

A review of the application file record reveals that the originally submitted response was not properly matched with the application file at the time the Notice of Abandonment was mailed but has since been matched therewith. Accordingly, the application is not abandoned in fact.

For the above stated reason, the petition is **granted**. The Notice of Abandonment is hereby vacated and the holding of abandonment withdrawn.

Inquiries regarding this decision should be directed to Ed Glick at (571) 272-2490.

The application file is being forwarded to the examiner for further examination.

Joseph Thomas, Director
Technology Center 2800
Semiconductors, Electrical and Optical
Systems and Component

UNITED STATES PATENT AND TRADEMARK OFFICE

Commissioner for Patents
United States Patent and Trademark Office
P.O. Box 1450
Alexandria, VA 22313-1450
www.uspto.gov

DANN, DORFMAN, HERRELL & SKILLMAN
1601 MARKET STREET
SUITE 2400
PHILADELPHIA PA 19103-2307

MAILED

JUN 22 2011

OFFICE OF PETITIONS

In re Application of	:	
Gilvarg et al.	:	DECISION ON PETITION
Application No. 11/917,864	:	TO WITHDRAW
Filed: July 25, 2008	:	FROM RECORD
Attorney Docket No. 4852-P04493US0	:	

This is a decision on the Request to Withdraw as attorney or agent of record under 37 C.F.R. § 1.36(b), filed June 9, 2011.

The request is **NOT APPROVED.**

A grantable request to withdraw as attorney/agent of record must be signed by every attorney/agent seeking to withdraw or contain a clear indication that one attorney is signing on behalf of another/others.

The request was signed by Kathleen D. Rigaut on behalf of all attorneys of record associated with Customer Number 00110. However, since the practitioners were not appointed by a Customer Number upon filing of the instant application, petitioner may not withdraw the practitioners by Customer Number.

Currently, there is an outstanding Office action mailed April 12, 2011 that requires a reply.

Telephone inquires concerning this decision should be directed to the undersigned at (571) 272-7751.

/Joan Olszewski/
Joan Olszewski
Petitions Examiner
Office of Petitions

UNITED STATES PATENT AND TRADEMARK OFFICE

Commissioner for Patents
United States Patent and Trademark Office
P.O. Box 1450
Alexandria, VA 22313-1450
www.uspto.gov

DANN, DORFMAN, HERRELL & SKILLMAN
1601 MARKET STREET
SUITE 2400
PHILADELPHIA PA 19103-2307

MAILED

JUL 05 2011

OFFICE OF PETITIONS

In re Application of Gilvarg et al. Application No. 11/917,864 Filed: July 25, 2008 Attorney Docket No. 4852-P04493US0	: : : : :	DECISION ON PETITION TO WITHDRAW FROM RECORD

This is a decision on the renewed Request to Withdraw as attorney or agent of record under 37 C.F.R. § 1.36(b), filed June 30, 2011.

The request is **APPROVED**.

A grantable request to withdraw as attorney/agent of record must be signed by every attorney/agent seeking to withdraw or contain a clear indication that one attorney is signing on behalf of another/others. The Office will require the practitioner(s) to certify that he, she or they have: (1) given reasonable notice to the client, prior to the expiration of the reply period, which the practitioner(s) intends to withdraw from employment; (2) delivered to the client or a duly authorized representative of the client all papers and property (including funds) to which the client is entitled; and (3) notified the client of any replies that may be due and the time frame within which the client must respond, pursuant to 37 CFR 10.40 (c).

The request was signed by Kathleen D. Rigaut on behalf of all attorneys of record.

All attorneys/agents associated with the above-identified application have been withdrawn. Applicants are reminded that there is no attorney of record at this time.

All future correspondence will be directed to the first named inventor at the address indicated below.

Currently, there is an outstanding Office action mailed April 12, 2011 that requires a reply.

Telephone inquiries concerning this decision should be directed to the undersigned at (571) 272-7751. All other inquires concerning either the examination or status of the application should be directed to the Technology Center.

/Joan Olszewski/
Joan Olszewski
Petitions Examiner
Office of Petitions

cc: Charles Gilvarg
240 Hartley Avenue
Princeton, NJ 08540-5656

Best Available Copy

UNITED STATES PATENT AND TRADEMARK OFFICE

Commissioner for Patents
United States Patent and Trademark Office
P.O. Box 1450
Alexandria, VA 22313-1450
www.uspto.gov

ELI LILLY & COMPANY
PATENT DIVISION
P.O. BOX 6288
INDIANAPOLIS IN 46206-6288

MAILED
JAN 31 2012
OFFICE OF PETITIONS

In re Application of :
Loizos et al. :
Application No. 11/917,890 :
Filed: October 15, 2008 :
Attorney Dkt. No: X18521 :
For: ANTIBODIES AGAINST PDGFRA :

ON APPLICATION FOR
PATENT TERM ADJUSTMENT

This is in response to the "REQUEST FOR THE RECONSIDERATION OF THE PATENT TERM ADJUSTMENT INDICATED IN NOTICE OF ALLOWANCE (37 CFR §1.705)", filed December 13, 2011. This request is properly treated under 37 CFR §1.705(b). Applicants dispute the 56 day reduction for the submission of the information disclosure on March 17, 2011. Applicants also indicate an additional reduction of 78 days is required.

The Office acknowledges submission of the $200.00 fee set forth in 37 CFR 1.18(e) for consideration of the application for patent term adjustment under 37 CFR 1.705(b).

The application for patent term adjustment is **Dismissed**.

Applicants dispute the 56 day reduction for the submission of the information disclosure statement (IDS) on March 17, 2011. Applicants contend the March 17, 2011 IDS was submitted solely for the benefit of the examiner's understanding.

Applicants' argument has been considered but deemed to be unpersuasive. A period of reduction of 56 days was warranted based on 37 CFR 1.704(c)(8).37 CFR §1.704(c)(8) provides that a period of reduction is entered for:

Circumstances that constitute a failure of the applicant to engage in reasonable efforts to conclude processing or examination of an application also include the following circumstances, which will result in the following reduction of the period of adjustment set forth in § 1.703 to the extent that the periods are not overlapping:

(8) Submission of a supplemental reply or other paper, other than a supplemental reply or other paper expressly requested by the examiner, after a reply has been filed, in which case the period of adjustment set forth in § 1.703 shall be reduced by the number of days, if any, beginning on the day after the date the initial reply was filed and ending on the date that the supplemental reply or other such paper was filed;

37 CFR 1.704(d) provides:

> A paper containing only an information disclosure statement in compliance with § § 1.97 and 1.98 will not be considered a failure to engage in reasonable efforts to conclude prosecution (processing or examination) of the application under paragraphs (c)(6), (c)(8), (c)(9), or (c)(10) of this section if it is accompanied by a statement that each item of information contained in the information disclosure statement was first cited in any communication from a foreign patent office in a counterpart application and that this communication was not received by any individual designated in § 1.56(c) more than thirty days prior to the filing of the information disclosure statement. This thirty-day period is not extendable.

In this instance, after the filing of a response on January 20, 2011, on March 17, 2011, applicants filed a supplemental response in the form of an information disclosure statement (IDS). The record supports a conclusion that this additional response was not expressly requested by the examiner. Further, the IDS did not include a §1.704(d) statement. Accordingly, the PTA was properly reduced by 56 days, the number of days beginning on the day after the date the initial reply was filed, January 21, 2011, and ending on the date that the supplemental reply or other such paper was filed, March 17, 2011. The 56 day reduction will not be removed.

Applicants also indicate that a 78 day period of reduction should be entered pursuant to 37 CFR 1.704(b). However, in this instance no reduction is required. The January 22, 2009 Notice withdrew the April 29, 2008 Notification of Missing Requirements. Thus, in this instance, an additional reduction is not warranted.

Applicants' delay prior to the mailing of the Notice of Allowance is 86 days. Office delay prior to the mailing of the Notice of Allowance is 190 days.

In view thereof, the correct patent term adjustment at the time of the mailing of the notice of allowance is one hundred four (104) days.

Any request for reconsideration of the patent term adjustment indicated on the patent must be timely filed within 2 months after issuance pursuant to 37 CFR 1.705(d) and **must** include payment of the required fee under 37 CFR 1.18(e).

The Office of Data Management has been advised of this decision. This application is being referred to the Office of Data Management for issuance of the patent.

Telephone inquiries specific to this matter should be directed to the undersigned at (571) 272-3215.

Charlema Grant

Charlema Grant
Attorney Advisor
Office of Petitions

UNITED STATES PATENT AND TRADEMARK OFFICE

Commissioner for Patents
United States Patent and Trademark Office
P.O. Box 1450
Alexandria, VA 22313-1450
www.uspto.gov

Date Mailed : 04/02/12

Patent No. : 8128929 B2
Inventor : **Loizos , et al.**
Patent Issued : **March 6, 2012**
Docket No. : **X18521**

Re: Request for Certificate of Correction

Consideration has been given your request for the issuance of a certificate of correction for the above-identified patent under the provisions of Rule(s) 1.322.

Inspection of the file of the application for the patent reveals that in column 1, line 5 is printed in accordance with the record (no fee or authorization to charge fee). **"Therefore, no correction(s) is in order here under United States Codes (U.S.C.) 254 and the Code of Federal Regulation (C.F.R.) 1322."**

In view of the foregoing, your request in this matter is hereby denied.

Lamonte M. Newsome
For Mary Diggs, Supervisor
Decisions & Certificates
Of Correction Branch
(571) 272-3421 or (703)756-1580

LI LILLY & COMPANY
PATENT DIVISION
P.O. BOX 6288
INDIANAPOLIS IN 46206-6288

Lmn

UNITED STATES PATENT AND TRADEMARK OFFICE

Commissioner for Patents
United States Patent and Trademark Office
P.O. Box 1450
Alexandria, VA 22313-1450
www.uspto.gov

Paper No.

WRB-IP LLP
801 N. PITT STREET
SUITE 123
ALEXANDRIA VA 22314

MAILED
APR 04 2011
OFFICE OF PETITIONS

In re Application of	:	
Geyer et al.	:	
Application No. 11/917,911	:	ON APPLICATION FOR
Filed: 12/18/2007	:	PATENT TERM ADJUSTMENT
Atty Docket No.	:	
000009-180	:	

This is a decision in response to the APPLICATION FOR PATENT TERM ADJUSTMENT filed on February 12, 2011, which is treated as a petition under 37 CFR 1.705(b). Applicants requests that the determination of patent term adjustment be corrected from 0 days to 574 days. Applicants request this correction, in part, on the basis that the Office will take in excess of three years to issue this patent.

To the extent the instant application for patent term adjustment requests reconsideration of the patent term adjustment as it relates to the Office's failure to issue the patent within 3 years of the filing date, the application for patent term adjustment under 37 CFR 1.705(b) is **DISMISSED as PREMATURE**.

Knowledge of the actual date the patent issues is required to calculate the amount, if any, of additional patent term patentee is entitled to for Office failure to issue the patent within 3 years. See § 1.702(b). The computer will not undertake the § 1.702(b) calculation until the actual date of issuance of the patent has been determined. Likewise, the computer will not calculate any further Office delay under § 1.702(a)(4) or applicant delay under § 1.704(c)(10) until the actual date of issuance of the patent has been determined. As such, the Office can not make a determination on the correctness of the patent term adjustment until the patent has issued.

Requesting reconsideration of the patent term adjustment to be indicated on the patent under 37 CFR 1.705(b) based on the initial determination of patent term adjustment and a projected

issuance date of the patent is premature. Accordingly, it is appropriate to dismiss as premature such a request.

Rather than file an application for patent term adjustment under 37 CFR 1.705(b) contesting the 37 CFR 1.702(b) calculation at the time of the mailing of the notice of allowance, applicants are advised that they may wait until the time of the issuance of the patent and file a request for reconsideration of the patent term adjustment pursuant to 37 CFR 1.705(d). As the USPTO does not calculate the amount of time earned pursuant to 37 CFR 1.702(b) until the time of the issuance of the patent, the Office will consider any request for reconsideration of the patent term adjustment due to an error in the calculation of 37 CFR 1.702(b) to be timely if the request for reconsideration is filed within two months of the issuance of the patent. However, as to all other bases for contesting the initial determination of patent term adjustment received with the notice of allowance, applicant must timely file an application for patent term adjustment prior to the payment of the issue fee[1].

The Office acknowledges submission of the $200.00 fee set forth in 37 CFR 1.18(e) for consideration of the application for patent term adjustment under 37 CFR 1.705(b).

Applicants state that that the application is not subject to a terminal disclaimer.

To the extent that the instant application for patent term adjustment requests reconsideration of the PTA at the time of the mailing of the Notice of Allowance, the request is **GRANTED TO THE EXTENT INDICATED**.

---

[1] For example, if applicant disputes both the calculation of patent term adjustment under 37 CFR 1.702(a)(1) for Office failure to mail a first Office action or notice of allowance not later than fourteen months after the date on which the application was filed and under 37 CFR 1.702(b) for Office failure to issue a patent within three years of the actual filing date of the application, then applicant must still timely file an application for patent term adjustment prior to the payment of the issue fee to contest the calculation of Office delay in issuing a first Office action or notice of allowance. See 37 CFR 1.705(b) and 35 U.S.C. 154(b)(3)(B). A dispute as to the calculation of the §1.702(a)(1) period raised on request for reconsideration of patent term adjustment under 37 CFR 1.705(d) will be dismissed as untimely filed.

The Office has updated the PALM and PAIR screens to reflect that the correct Patent Term Adjustment (PTA) determination at the time of the mailing of the Notice of Allowance is 573 days. A copy of the updated PAIR screen, showing the correct determination, is enclosed.

On January 26, 2011, the Office mailed a Determination of Patent Term Adjustment under 35 U.S.C. 154(b) in the above-identified application. Applicants were advised that the patent term adjustment to date was 0 days (0 days of PTO delay less 0 days of applicant delay).

The instant application for patent term adjustment was timely filed.[2]

Applicants assert that the period of "A" delay is 535 days, or 14 months and 535 days after December 18, 2007.

Applicants are correct, to the extent indicated.

37 CFR 1.702(a)(1) states:

> Failure to take certain actions within specified time frames. Subject to the provisions of 35 U.S.C. 154(b) and this subpart, the term of an original patent shall be adjusted if the issuance of the patent was delayed due to the failure of the Office to:
>
> (1) Mail at least one of a notification under 35 U.S.C. 132 or a notice of allowance under 35 U.S.C. 151 not later than fourteen months after the date on which the application was filed under 35 U.S.C. 111(a) or fulfilled the requirements of 35 U.S.C. 371 in an international application.

37 CFR 1.703(a)(1) states that:

> The period of adjustment under § 1.702(a) is the sum of the following periods:

[2] PALM Records indicate that the issue fee has not been paid as of the filing date of the subject application for patent term adjustment.

> (1) The number of days, if any, in the period beginning on the day after the date that is fourteen months after the date on which the application was filed under 35 U.S.C. 111(a) or fulfilled the requirements of 35 U.S.C. 371 and ending on the date of mailing of either an action under 35 U.S.C. 132, or a notice of allowance under 35 U.S.C. 151, whichever occurs first.

In this case, the application fulfilled the requirements of 35 U.S.C. 371 on January 11, 2008. On October 5, 2010, fourteen months and 573 days after day after the date the application fulfilled the requirements of 35 U.S.C. 371, a non-final Office action was mailed.

In view thereof, the correct patent term adjustment at the time of the mailing of the notice of allowance is 573 days (573 days of Office delay less 0 days of applicant delay).

The Office acknowledges submission of the $200.00 fee set forth in 37 CFR 1.18(e). No additional fees are required.

The application is being forwarded to the Office of Data Management for issuance of the patent. The patent term adjustment indicated on the patent (as shown on the Issue Notification mailed about three weeks prior to patent issuance) will include any additional adjustment accrued both for Office delay in issuing the patent more than four months after payment of the issue fee and satisfaction of all outstanding requirements, and for the Office taking in excess of three years to issue the patent (to the extent that the three-year period does not overlap with periods already accorded).

Telephone inquiries specific to this decision should be directed to the undersigned at (571) 272-3231.

D Wood

Douglas I. Wood
Senior Petitions Attorney
Office of Petitions

Encl: Revised PAIR Calculation

11/917,911	ENGINE AND METHOD OF MAINTAINING ENGINE EXHAUST TEMPERATURE	03-31-2011::13:17:05

Patent Term Adjustments

Patent Term Adjustment (PTA) for Application Number: 11/917,911

Filing or 371(c) Date:	12-18-2007	Overlapping Days Between {A and B} or {A and C}:	0
Issue Date of Patent:	-	Non-Overlapping USPTO Delays:	0
A Delays:	0	PTO Manual Adjustments:	573
B Delays:	0	Applicant Delays:	0
C Delays:	0	Total PTA Adjustments:	573

Patent Term Adjustment History **Explanation Of Calculations**

Number	Date	Contents Description	PTO(Days)	APPL (Days)	Start
46	03-31-2011	Adjustment of PTA Calculation by PTO	573		0
41	01-26-2011	Mail Notice of Allowance			0
40	01-21-2011	Issue Revision Completed			0
39	01-21-2011	Document Verification			0
38	01-21-2011	Notice of Allowance Data Verification Completed			0
37	01-18-2011	Allowability Notice			0
33	01-05-2011	Information Disclosure Statement considered			0
32	01-05-2011	Electronic Information Disclosure Statement		0	30
31	01-11-2011	Date Forwarded to Examiner			0
30	01-05-2011	Response after Non-Final Action			0
29	01-05-2011	Information Disclosure Statement (IDS) Filed			0
28	10-05-2010	Electronic Review			0
27	10-05-2010	Email Notification			0
26	10-05-2010	Mail Non-Final Rejection			0
25	09-30-2010	Non-Final Rejection			0
20	09-11-2010	Case Docketed to Examiner in GAU			0
18	08-25-2010	Email Notification			0
17	08-25-2010	Email Notification			0
16	05-13-2010	371 Completion Date			0
15	08-24-2010	Application Dispatched from OIPE			0
14	08-25-2010	Filing Receipt - Updated			0
13	08-25-2010	Notice of DO/EO Acceptance Mailed			0
12	05-13-2010	Additional Application Filing Fees			0
11	08-20-2010	Email Notification			0
10	08-19-2010	PG-Pub Issue Notification			0
9	05-13-2010	Electronic Review			0
8	05-13-2010	Email Notification			0
7	05-13-2010	Email Notification			0
6	05-13-2010	371 Supplemental Fees Missing - Form M923			0
5	05-13-2010	Filing Receipt			0
0.5	07-11-2005	International Filing date			0

Close Window

Doc Code: PET.RELIEF
Document Description: Certification and Request for Japan Events Relief

PTO/SB/425 (03-11)

CERTIFICATION AND REQUEST FOR RELIEF DUE TO EVENTS OF MARCH 11, 2011, IN JAPAN (Page 1 of 2)

Nonprovisional Application Number or Control Number (if applicable): 11/918,006	Patent Number (if applicable):
First Named Inventor: Tadahiro OHMI	Title of Invention: FILM FORMING APPARATUS AND FILM FORMING METHOD

APPLICANT/PATENTEE/REEXAMINATION PARTY HEREBY CERTIFIES AND REQUESTS THE FOLLOWING FOR THE ABOVE-IDENTIFIED APPLICATION/PATENT/REEXAMINATION PROCEEDING.

1. FOR PATENT APPLICATIONS AND REEXAMINATION PROCEEDINGS PENDING IN THE USPTO AS OF MARCH 11, 2011, IN WHICH A COMMUNICATION FROM THE USPTO IS SOUGHT TO BE REMAILED:

   a. One or more inventors, an assignee, or a correspondence address (for the application/proceeding) is in an area of Japan affected by the earthquake and/or tsunami of March 11, 2011.

   b. A reply or response to an Office action (final, non-final, or other), a notice of allowance, or other Office notice (hereinafter collectively referred to as "Office communication") is outstanding.

   c. The statutory or non-statutory time period set for response has not yet expired.

   d. Withdrawal and reissuance of the Office communication is requested.

   e. It is acknowledged that if this request is not made within sufficient time so that withdrawal and reissuance of the Office communication occur prior to expiration of the statutory or non-statutory time period (as permitted to be extended under 37 CFR 1.136(a), or as extended under 37 CFR 1.550(c) or 1.956), this request may not be granted.

   f. The need for the reissuance of the Office communication was due to the effects of the earthquake and/or tsunami of March 11, 2011.

   g. This request is being sent via EFS-Web or by mail directed to Mail Stop Petition, Commissioner for Patents, P.O. Box 1450, Alexandria, VA 22313-1450.

2. FOR PATENTEES WHO WERE UNABLE TO TIMELY PAY A PATENT MAINTENANCE FEE DURING THE SIX-MONTH GRACE PERIOD FOLLOWING THE WINDOW TO PAY THE MAINTENANCE FEE:

   a. The original window of time to pay the maintenance fee without the surcharge required by 37 CFR 1.20(h) expired on or after March 11, 2011.

   b. The delay in paying the fee was due to the effects of the earthquake and/or tsunami of March 11, 2011.

   c. The USPTO is requested to *sua sponte* waive the surcharge in 37 CFR 1.20(h) for paying a maintenance fee during the six-month grace period following the window to pay the maintenance fee.

   d. This request and payment of the maintenance fee during the six-month grace period following the window to pay the maintenance fee is being mailed to: Director of the United States Patent and Trademark Office, Attn: Maintenance Fee, 2051 Jamieson Avenue, Suite 300, Alexandria, VA 22314; or being transmitted via facsimile to: 571-273-6500.

CERTIFICATION AND REQUEST FOR RELIEF DUE TO EVENTS OF MARCH 11, 2011, IN JAPAN (Page 2 of 2)

3. FOR PATENTEES WHO NEED TO FILE A PETITION TO ACCEPT A DELAYED MAINTENANCE FEE PAYMENT UNDER 37 CFR 1.378(c):

   a. The maintenance fee payment was required to have been paid after March 10, 2011.

   b. A petition under 37 CFR 1.378(c) (using USPTO form PTO/SB/66 – Petition to Accept Unintentionally Delayed Payment of Maintenance Fee in an Expired Patent (37 CFR 1.378(c))) is being promptly filed accompanied by the applicable maintenance fee payment (but not the surcharge under 37 CFR 1.20(i)).

   c. The delay in payment of the maintenance fee was due to the effects of the earthquake and/or tsunami of March 11, 2011.

   d. The USPTO is requested to *sua sponte* waive the surcharge in 37 CFR 1.20(i) for accepting a delayed maintenance fee payment.

   e. It is acknowledged that the petition to accept a delayed maintenance fee payment under 37 CFR 1.378(c) must be filed by March 11, 2012, in order to be entitled to a waiver of the surcharge under 37 CFR 1.20(i).

   f. It is acknowledged that the petition to accept a delayed maintenance fee payment under 37 CFR 1.378(c) must be filed within twenty-four months from the expiration date of the patent. *See* 35 U.S.C 41(c).

   g. This request and the petition to accept a delayed maintenance fee payment under 37 CFR 1.378(c) is being submitted via EFS-Web or by mail directed to Mail Stop Petition, Commissioner for Patents, P.O. Box 1450, Alexandria, VA 22313-1450.

4. FOR NONPROVISIONAL PATENT APPLICATIONS FILED WITHOUT AN EXECUTED OATH OR DECLARATION OR PAYMENT OF THE BASIC FILING FEE, SEARCH FEE, AND/OR EXAMINATION FEE:

   a. The nonprovisional patent application was filed on or after March 11, 2011, and prior to April 12, 2011.

   b. The late filing of the oath or declaration or the basic filing fee, search fee, or examination fee was due to the effects of the earthquake and/or tsunami of March 11, 2011.

   c. The USPTO is requested to *sua sponte* waive the surcharge set forth in 37 CFR 1.16(f) for the late filing of the oath or declaration or basic filing fee, search fee, and/or examination fee.

   d. This request, together with the executed oath or declaration or the basic filing fee, search fee, or examination fee, as well as the reply to the Notice to File Missing Parts, is being submitted via EFS-Web or by mail directed to Mail Stop Missing Parts, Commissioner for Patents, P.O. Box 1450, Alexandria, VA 22313-1450.

Signature	Date March 24, 2011
Name (Print/Typed) Steven B. Chang	Practitioner Registration Number 59,423

Note: *Signatures of all the inventors, § 1.41(b) applicants, or assignees of record of the entire interest or their representative(s), or reexamination requesters at the appeal stage are required in accordance with 37 CFR 1.33 and 11.18. Please see 37 CFR 1.4(d) for the form of the signature. If necessary, submit multiple forms for more than one signature, see below*.*

☐ *Total of _____ forms are submitted.

UNITED STATES PATENT AND TRADEMARK OFFICE

Commissioner for Patents
United States Patent and Trademark Office
P.O. Box 1450
Alexandria, VA 22313-1450
www.uspto.gov

OBLON, SPIVAK, MCCLELLAND MAIER & NEUSTADT, L.L.P.
1940 DUKE STREET
ALEXANDRIA VA 22314

MAILED
APR 06 2011
OFFICE OF PETITIONS

In re Application of :
Tadahiro OHMI et al. :
Application No. 11/918,006 : DECISION ON PETITION
Filed: November 15, 2007 :
Attorney Docket No.: 322165US26PCT :

This is a decision on the request filed March 24, 2011, seeking relief under the provisions of an announcement by the Under Secretary and Director of the United States Patent and Trademark Office on March 17, 2011, http://www.uspto.gov/patents/announce/japan_relief_2011mar17.pdf, providing relief to inventors and patent owners in areas affected by the earthquake and resulting tsunami of March 11, 2011.

The request for relief is **GRANTED**.

In the above-identified application, an Office action was mailed on October 27, 2010. The instant petition was filed prior to the expiration of the period for reply and the certifications for granting of relief are considered to be met by the submission of the request.

Telephone inquires concerning this decision should be directed to Ramesh Krishnamurthy at 571-272-4914. All other inquires concerning either the examination or status of the application should be directed to the Technology Center.

This application is being referred to the Technology Center, Art Unit 1716 for re-mailing the Office action of October 27, 2010. The period for reply will run from the mailing date of the Office action.

Ramesh Krishnamurthy

Ramesh Krishnamurthy
Petitions Examiner
Office of Petitions

UNITED STATES PATENT AND TRADEMARK OFFICE

Commissioner for Patents
United States Patent and Trademark Office
P.O. Box 1450
Alexandria, VA 22313-1450
www.uspto.gov

STEPTOE & JOHNSON LLP
1330 CONNECTICUT AVE., NW
WASHINGTON DC 20036

MAILED
JAN 28 2011
OFFICE OF PETITIONS

In re Application of	:
Ryangsu Kim, et al.	:
Application No. 11/918,040	: DECISION DISMISSING
Filed: October 9, 2007	: PETITION UNDER
Attorney Docket No. 28951.1202	: 37 CFR 1.313(c)(2)

This is a decision on the petition under 37 CFR 1.313(c)(2), filed January 24, 2011, to withdraw the above-identified application from issue after payment of the issue fee.

The petition is **DISMISSED AS MOOT.**

Unfortunately, the petition was not referred to the appropriate deciding official for decision until after the issuance of this application into a patent. However, petitioner's attention is directed to 37 CFR 1.313(d), which states:

> A petition under this section will not be effective to withdraw the application from issue unless it is actually received and granted by the appropriate officials **before the date of issue.** (Emphasis added)

In this case, the petition was not received in the Office of Petitions for consideration until January 28, 2011, which is after the above-identified application issued as U.S. Patent No. 7,877,063 on January 25, 2011. Since the case has now issued, the petition to withdraw from issue cannot be granted.

Petitioner is reminded, that while petitions to withdraw from issue may be mailed to the Commissioner for Patents, as was done in this case, applicants were cautioned to hand carry or fax petitions to withdraw from issue directly to the Office of Petitions. *See* MPEP § 1308.

The request for continued examination (RCE) filed concurrently with the petition is improper in view of the issuance of this application into a patent and will not be processed.

Accordingly, the $810 filing fee and the $130 petition fee submitted are unnecessary and will be refunded in due course.

The Information Disclosure Statement has been made of record in the file of the above-identified application without further consideration. *See* 37 CFR 1.97(i).

Telephone inquiries concerning this matter may be directed to the undersigned at (571) 272-3208.

/KOC/
Karen Creasy
Petitions Examiner
Office of Petitions

Doc Code: PET.RELIEF
Document Description: Certification and Request for Japan Events Relief

PTO/SB/425 (03-11)

CERTIFICATION AND REQUEST FOR RELIEF DUE TO EVENTS OF MARCH 11, 2011, IN JAPAN (Page 1 of 2)

Nonprovisional Application Number or Control Number (if applicable): 11/918,068	Patent Number (if applicable):
First Named Inventor: Takahiro OHMI	Title of Invention: FLUORESCENT LAMP

APPLICANT/PATENTEE/REEXAMINATION PARTY HEREBY CERTIFIES AND REQUESTS THE FOLLOWING FOR THE ABOVE-IDENTIFIED APPLICATION/PATENT/REEXAMINATION PROCEEDING.

1. FOR PATENT APPLICATIONS AND REEXAMINATION PROCEEDINGS PENDING IN THE USPTO AS OF MARCH 11, 2011, IN WHICH A COMMUNICATION FROM THE USPTO IS SOUGHT TO BE REMAILED:

   a. One or more inventors, an assignee, or a correspondence address (for the application/proceeding) is in an area of Japan affected by the earthquake and/or tsunami of March 11, 2011.

   b. A reply or response to an Office action (final, non-final, or other), a notice of allowance, or other Office notice (hereinafter collectively referred to as "Office communication") is outstanding.

   c. The statutory or non-statutory time period set for response has not yet expired.

   d. Withdrawal and reissuance of the Office communication is requested.

   e. It is acknowledged that if this request is not made within sufficient time so that withdrawal and reissuance of the Office communication occur prior to expiration of the statutory or non-statutory time period (as permitted to be extended under 37 CFR 1.136(a), or as extended under 37 CFR 1.550(c) or 1.956), this request may not be granted.

   f. The need for the reissuance of the Office communication was due to the effects of the earthquake and/or tsunami of March 11, 2011.

   g. This request is being sent via EFS-Web or by mail directed to Mail Stop Petition, Commissioner for Patents, P.O. Box 1450, Alexandria, VA 22313-1450.

2. FOR PATENTEES WHO WERE UNABLE TO TIMELY PAY A PATENT MAINTENANCE FEE DURING THE SIX-MONTH GRACE PERIOD FOLLOWING THE WINDOW TO PAY THE MAINTENANCE FEE:

   a. The original window of time to pay the maintenance fee without the surcharge required by 37 CFR 1.20(h) expired on or after March 11, 2011.

   b. The delay in paying the fee was due to the effects of the earthquake and/or tsunami of March 11, 2011.

   c. The USPTO is requested to *sua sponte* waive the surcharge in 37 CFR 1.20(h) for paying a maintenance fee during the six-month grace period following the window to pay the maintenance fee.

   d. This request and payment of the maintenance fee during the six-month grace period following the window to pay the maintenance fee is being mailed to: Director of the United States Patent and Trademark Office, Attn: Maintenance Fee, 2051 Jamieson Avenue, Suite 300, Alexandria, VA 22314; or being transmitted via facsimile to: 571-273-6500.

CERTIFICATION AND REQUEST FOR RELIEF DUE TO EVENTS OF MARCH 11, 2011, IN JAPAN (Page 2 of 2)

3. FOR PATENTEES WHO NEED TO FILE A PETITION TO ACCEPT A DELAYED MAINTENANCE FEE PAYMENT UNDER 37 CFR 1.378(c):

   a. The maintenance fee payment was required to have been paid after March 10, 2011.

   b. A petition under 37 CFR 1.378(c) (using USPTO form PTO/SB/66 – Petition to Accept Unintentionally Delayed Payment of Maintenance Fee in an Expired Patent (37 CFR 1.378(c))) is being promptly filed accompanied by the applicable maintenance fee payment (but not the surcharge under 37 CFR 1.20(i)).

   c. The delay in payment of the maintenance fee was due to the effects of the earthquake and/or tsunami of March 11, 2011.

   d. The USPTO is requested to *sua sponte* waive the surcharge in 37 CFR 1.20(i) for accepting a delayed maintenance fee payment.

   e. It is acknowledged that the petition to accept a delayed maintenance fee payment under 37 CFR 1.378(c) must be filed by March 11, 2012, in order to be entitled to a waiver of the surcharge under 37 CFR 1.20(i).

   f. It is acknowledged that the petition to accept a delayed maintenance fee payment under 37 CFR 1.378(c) must be filed within twenty-four months from the expiration date of the patent. *See* 35 U.S.C 41(c).

   g. This request and the petition to accept a delayed maintenance fee payment under 37 CFR 1.378(c) is being submitted via EFS-Web or by mail directed to Mail Stop Petition, Commissioner for Patents, P.O. Box 1450, Alexandria, VA 22313-1450.

4. FOR NONPROVISIONAL PATENT APPLICATIONS FILED WITHOUT AN EXECUTED OATH OR DECLARATION OR PAYMENT OF THE BASIC FILING FEE, SEARCH FEE, AND/OR EXAMINATION FEE:

   a. The nonprovisional patent application was filed on or after March 11, 2011, and prior to April 12, 2011.

   b. The late filing of the oath or declaration or the basic filing fee, search fee, or examination fee was due to the effects of the earthquake and/or tsunami of March 11, 2011.

   c. The USPTO is requested to *sua sponte* waive the surcharge set forth in 37 CFR 1.16(f) for the late filing of the oath or declaration or basic filing fee, search fee, and/or examination fee.

   d. This request, together with the executed oath or declaration or the basic filing fee, search fee, or examination fee, as well as the reply to the Notice to File Missing Parts, is being submitted via EFS-Web or by mail directed to Mail Stop Missing Parts, Commissioner for Patents, P.O. Box 1450, Alexandria, VA 22313-1450.

Signature	Date March 30, 2011
Name (Print/Typed) George C. Beck	Practitioner Registration Number 38,072

Note: *Signatures of all the inventors, § 1.41(b) applicants, or assignees of record of the entire interest or their representative(s), or reexamination requesters at the appeal stage are required in accordance with 37 CFR 1.33 and 11.18. Please see 37 CFR 1.4(d) for the form of the signature. If necessary, submit multiple forms for more than one signature, see below*.*

☐ *Total of _____ forms are submitted.

UNITED STATES PATENT AND TRADEMARK OFFICE

Commissioner for Patents
United States Patent and Trademark Office
P.O. Box 1450
Alexandria, VA 22313-1450
www.uspto.gov

FOLEY AND LARDNER LLP
SUITE 500
3000 K STREET NW
WASHINGTON DC 20007

MAILED

APR 05 2011

OFFICE OF PETITIONS

In re Application of	:	
Ohmi et al.	:	
Application No. 11/918,068	:	DECISION ON PETITION
Filed: November 15, 2007	:	
Attorney Docket No. 039262-0185	:	

This is a decision on the request filed March 30, 2011, seeking relief under the provisions of an announcement by the Under Secretary and Director of the United States Patent and Trademark Office on March 17, 2011, http://www.uspto.gov/patents/announce/japan_relief_2011mar17.pdf, providing relief to inventors and patent owners in areas affected by the earthquake and resulting tsunami of March 11, 2011.

The request for relief is **GRANTED**.

In the above-identified application, an Office action was mailed on January 26, 2011. The instant petition was filed prior to the expiration of the period for reply and the certifications for granting of relief are considered to be met by the submission of the request.

Telephone inquires concerning this decision should be directed to the undersigned at 571-272-7751. All other inquires concerning either the examination or status of the application should be directed to the Technology Center.

This application is being referred to the Technology Center, Art Unit 2889 for re-mailing the Office action of January 26, 2011. The period for reply will run from the mailing date of the Office action.

/Joan Olszewski/
Joan Olszewski
Petitions Examiner
Office of Petitions

UNITED STATES PATENT AND TRADEMARK OFFICE

Commissioner for Patents
United States Patent and Trademark Office
P.O. Box 1450
Alexandria, VA 22313-1450
www.uspto.gov

ARGOS THERPEUTICS, INC.
4233 TECHNOLOGY DRIVE
DURHAM, NC 27704

MAILED
JAN 18 2012
OFFICE OF PETITIONS

In re Application of	:	
Rebecca Pogue-Caley, et al.	:	
Application No. 11/918,076	:	DECISION GRANTING PETITION
Filed: October 9, 2007	:	UNDER 37 CFR 1.313(c)(2)
Attorney Docket No. ARG035US	:	

This is a decision on the petition under 37 CFR 1.313(c)(2), filed January 17, 2012, to withdraw the above-identified application from issue after payment of the issue fee.

The petition is not signed by an attorney of record. Nevertheless, in accordance with 37 CFR 1.34, the signature of Ms. Elaine T. Sale appearing on the correspondence shall constitute a representation to the United States Patent and Trademark Office that he is authorized to represent the particular party on whose behalf he acts. If Ms. Sale desires to receive future correspondence regarding this file, the appropriate power of attorney documents must be submitted. All future correspondence regarding this application file will be directed solely to the above-noted correspondence address of record.

The petition is **GRANTED**.

The above-identified application is withdrawn from issue for consideration of a submission under 37 CFR 1.114 (request for continued examination). *See* 37 CFR 1.313(c)(2).

Petitioner is advised that the issue fee paid on January 12, 2012 cannot be refunded. If, however, this application is again allowed, petitioner may request that it be applied towards the issue fee required by the new Notice of Allowance.[1]

Telephone inquiries regarding this decision should be directed to undersigned at (571) 272-1642. All other inquiries regarding the examination or status of this application should be directed to the Technology Center.

[1] *The request to apply the issue fee to the new Notice may be satisfied by completing and returning the new Part B – Fee(s) Transmittal Form (along with any balance due at the time of submission). Petitioner is advised that the Issue Fee Transmittal Form must be completed and timely submitted to avoid abandonment of the application.*

This application is being referred to Technology Center AU 1633 for processing of the request for continued examination under 37 CFR 1.114 and for consideration of the concurrently filed information disclosure statement.

/AMW/
April M. Wise
Petitions Examiner
Office of Petitions

UNITED STATES PATENT AND TRADEMARK OFFICE

Commissioner for Patents
United States Patent and Trademark Office
P.O. Box 1450
Alexandria, VA 22313-1450
www.uspto.gov

MAILED
FEB 15 2011
OFFICE OF PETITIONS

NOVARTIS INSTITUTES FOR BIOMEDICAL RESEARCH, INC.
220 MASSACHUSETTS AVENUE
CAMBRIDGE, MA 02139

In re Application of	:	
Lai et al.	:	
Application No. 11/918,176	:	ON PETITION
Filed: December 2, 2008	:	
Attorney Docket No. PP028073.0003	:	

This is a decision on the petition under the unintentional provisions of 37 CFR 1.137(b), filed December 14, 2010, to revive the above-identified application.

The petition is **GRANTED**.

The application became abandoned for failure to file a reply in a timely manner to the Restriction Requirement, mailed May 27, 2010, which set a shortened statutory period for reply of one (1) month or thirty (30) days (whichever is later). No extensions of time under the provisions of 37 CFR 1.136(a) were timely obtained. Accordingly, the application became abandoned on June 28, 2010.

The petition satisfies the requirements of 37 CFR 1.137(b) in that petitioner has supplied (1) the reply in the form of an election of the species to be examined, (2) the petition fee of $1,620, and (3) a proper statement of unintentional delay.

An extension of time under 37 CFR 1.136 must be filed prior to the expiration of the maximum extendable period for reply. See In re Application of S., 8 USPQ2d 1630, 1631 (Comm'r Pats. 1988). Since the $2,350 extension of time fee submitted with the petition on December 14, 2010, was subsequent to the maximum extendable period for reply, this fee is unnecessary and will be credited to petitioner's deposit account.

Telephone inquiries concerning this decision should be directed to the undersigned at (571) 272-6059.

This matter is being referred to Technology Center 1642 for further examination on the merits.

A. Kelley

Alicia Kelley
Petitions Examiner
Office of Petitions

UNITED STATES PATENT AND TRADEMARK OFFICE

Commissioner for Patents
United States Patent and Trademark Office
P.O. Box 1450
Alexandria, VA 22313-1450
www.uspto.gov

KENNETH E. DARNELL
1975 Grimsley Road
Gordon AL 36343

MAILED

DEC 19 2011

OFFICE OF PETITIONS

In re Application of	:	
James P. Yates	:	
Application No. 11/918,177	:	DECISION ON PETITION
Filed: October 9, 2007	:	TO WITHDRAW
Attorney Docket No. PWV-P010-US	:	FROM RECORD
	:	

This is a decision on the Request to Withdraw as attorney or agent of record under 37 C.F.R. § 1.36(b), filed November 28, 2011.

The request is **NOT APPROVED.**

The Office will no longer accept address changes to a new practitioner or law firm filed with a Request, absent the filing of a power of attorney to the new representative. The Office will either change the correspondence address of record to the most current address information provided for the assignee of the entire interest who properly became of record under 37 CFR 3.71 or, if no assignee of the entire interest has properly been made of record under 37 CFR 3.71, the most current address information provided for the first named inventor.

Accordingly, the request to withdraw from record cannot be approved because a forwarding address was not provided. The request to change the correspondence address should be that of the: (1) the first named signing inventor; or (2) an assignee of the entire interest under 37 C.F.R 3.71. If an assignee has intervened in this application then a Statement under 37 CFR 3.73(b), or a copy of the actual assignment must be submitted with a renewed request.

According to the records of the assignment branch an assignment was recorded on August 10, 2009. Upon the filing of a renewed request, a copy of the assignment or a statement under 37 CFR 3.73(b) must be electronically filed in this application to update the application file.

All future communications from the Office will continue to be directed to the above-identified address until otherwise properly notified.

Telephone inquiries concerning this decision should be directed to the undersigned at 571-272-4618.

/Kimberly Inabinet/

Kimberly Inabinet
Petitions Examiner
Office of Petitions

UNITED STATES PATENT AND TRADEMARK OFFICE

Commissioner for Patents
United States Patent and Trademark Office
P.O. Box 1450
Alexandria, VA 22313-1450
www.uspto.gov

Decision Date : May 17,2011

In re Application of :

Patrick McCance

Application No : 11918182

Filed : 09-Oct-2007

Attorney Docket No : ILP-0003/23870-PCT2-US

DECISION ON REQUEST TO WITHDRAW AS ATTORNEY/AGENTOF RECORD

This is an electronic decision on the Request to Withdraw as attorney or agent of record under 37 CFR § 1.36(b), filed May 17,2011

The request is **APPROVED.**

The request was signed by Barry E. Kaplan (registration no. 38934) on behalf of all attorneys/agents associated with Customer Number 30184 . All attorneys/agents associated with Cusotmer Number 30184 have been withdrawn.

Since there are no remaining attorneys of record, all future communications from the Office will be directed to the first named inventor or assignee that has properly made itself of record pursuant to 37 CFR 3.71, with correspondence address:

Name	Mr. Patrick M. McCance
Name2	
Address 1	2145 Wood Valley Drive
Address 2	
City	Loganville
State	GA
Postal Code	30052
Country	US

As a reminder, requester is required to inform the first named inventor or assignee that has properly made itself of record pursuant to 37 CFR 3.71 of the electronically processed petition.

Telephone inquiries concerning this decision should be directed to the Patent Electronic Business Center (EBC) at 866-217-9197.

Office of Petitions

Doc Code: PET.AUTO **Document Description: Petition automatically granted by EFS-Web**	PTO/SB/83 U.S. Patent and Trademark Office Department of Commerce

Electronic Petition Request	**REQUEST FOR WITHDRAWAL AS ATTORNEY OR AGENT AND CHANGE OF CORRESPONDENCE ADDRESS**
Application Number	11918182
Filing Date	09-Oct-2007
First Named Inventor	Patrick McCance
Art Unit	2875
Examiner Name	EVAN DZIERZYNSKI
Attorney Docket Number	ILP-0003/23870-PCT2-US
Title	Multi-Function Cooler Apparatus and System

◉ Please withdraw me as attorney or agent for the above identified patent application and the practitioners of record associated with Customer Number: 30184

The reason(s) for this request are those described in 37 CFR:

10.40(c)(1)(iv)

Certifications

☒ I/We have given reasonable notice to the client, prior to the expiration of the response period, that the practitioner(s) intend to withdraw from employment

☒ I/We have delivered to the client or a duly authorized representative of the client all papers and property (including funds) to which the client is entitled

☒ I/We have notified the client of any responses that may be due and the time frame within which the client must respond

Change the correspondence address and direct all future correspondence to the first named inventor or assignee that has properly made itself of record pursuant to 37 CFR 3.71:

Name	Mr. Patrick M. McCance
Address	2145 Wood Valley Drive
City	Loganville
State	GA
Postal Code	30052
Country	US

I am authorized to sign on behalf of myself and all withdrawing practitioners.	
Signature	/Barry E. Kaplan/
Name	Barry E. Kaplan
Registration Number	38934

UNITED STATES PATENT AND TRADEMARK OFFICE

COMMISSIONER FOR PATENTS
UNITED STATES PATENT AND TRADEMARK OFFICE
P.O. BOX 1450
ALEXANDRIA, VA 22313-1450
www.uspto.gov

NELSON MULLINS RILEY &
SCARBOROUGH LLP
FLOOR 30, SUITE 3000
ONE POST OFFICE SQUARE
BOSTON MA 02109

MAILED
DEC 17 2010
OFFICE OF PETITIONS

In re Application of	:	
CARDARELLI et al.	:	APPLICATION FOR PATENT
Application No. 11/918,191	:	TERM ADJUSTMENT
Filed: 05/19/2008	:	
Attorney Docket No. MXI-335US	:	

This is a decision on the APPLICATION FOR PATENT TERM ADJUSTMENT INCLUDING REQUEST FOR RECONSIDERATION UNDER 37 CFR §1.705(b) filed October 13, 2010. Applicants submit that the correct patent term adjustment to be indicated on the patent is a minimum of two hundred ninety-six (296) days as calculated by the Office as of the mailing of the initial determination of patent term adjustment. Applicants seek this correction partly on the basis that the Office will take in excess of three years to issue this patent.

The request for reconsideration of the patent term adjustment is **GRANTED to the extent indicated herein.**

The Office has updated the PALM and PAIR screens to reflect that the corrected patent term adjustment determination at the time of the mailing of the notice of allowance is **one hundred thirty-six (136) days**. A copy of the updated PAIR screen, showing the corrected determination, is enclosed.

Initially, applicants disclose that they should have been assessed a period of delay of 83 day pursuant to 37 CFR 1.704(c)(3) for the abandonment of the application. The Office concurs with applicants.

37 CFR 1.704(c)(3) states:

> Abandonment of the application or late payment of the issue fee, in which case the period of adjustment set forth in § 1.703 shall be reduced by the number of days, if any, beginning on the date of abandonment or the date after the date the issue fee was due and ending on the earlier of:
>
> (i) The date of mailing of the decision reviving the application or accepting late payment of the issue fee; or
>
> (ii) The date that is four months after the date the grantable petition to revive the application or accept late payment of the issue fee was filed[.]

In this instance, the application became abandoned on August 19, 2007. On October 9, 2007, applicants filed a petition under 37 CFR 1.137(b) to revive the application. A decision granting the petition to revive was mailed on November 9, 2007. Accordingly, the period of adjustment should be reduced by an additional 83 days, the number of days beginning on the date of abandonment, August 19, 2007, and ending on the lesser period of the date of mailing of the decision reviving the application, November 9, 2007. See 37 CFR 1.704(c)(3)(i). A period of reduction of 83 days will be entered.

As to applicants' request for reconsideration of the patent term adjustment as it relates to the Office's failure to issue the patent within three years of the filing date, the application for patent term adjustment under 37 CFR 1.705(b) is **DISMISSED as PREMATURE**.

Knowledge of the actual date the patent issues is required to calculate the amount, if any, of additional patent term patentees are entitled to for Office failure to issue the patent within three years. See 37 CFR 1.702(b). (This is true even where a request for continued examination (RCE) was filed). The computer will not undertake the § 1.702(b) calculation until the actual date of issuance of the patent has been determined. Likewise, the computer will not calculate any further Office delay under 37 CFR 1.702(a)(4) or applicant delay under 37 CFR

1.704(c)(10) until the actual date of issuance of the patent has been determined. As such, the Office cannot make a determination on the correctness of the patent term adjustment until the patent has issued. Requesting reconsideration of the patent term adjustment to be indicated on the patent under 37 CFR 1.705(b) based on the initial determination of patent term adjustment and a projected issuance date of the patent (or even the filing date of the request for continued examination) is premature. Accordingly, it is appropriate to dismiss such a request as premature.

Rather than file an application for patent term adjustment under 37 CFR 1.705(b) contesting the 37 CFR 1.702(b) calculation at the time of the mailing of the notice of allowance, applicants are advised that they may wait until the time of the issuance of the patent and file a request for reconsideration of the patent term adjustment pursuant to 37 CFR 1.705(d). As the USPTO does not calculate the amount of time earned pursuant to 37 CFR 1.702(b) until the time of the issuance of the patent, the Office will consider any request for reconsideration of the patent term adjustment due to an error in the calculation of 37 CFR 1.702(b) to be timely if the request for reconsideration is filed within two months of the issuance of the patent. However, as to all other bases for contesting the initial determination of patent term adjustment received with the notice of allowance, applicants must timely file an application for patent term adjustment prior to the payment of the issue fee.[1]

Any request for reconsideration of the patent term adjustment indicated on the patent must be timely filed within two months after issuance pursuant to 37 CFR 1.705(d) and must include payment of the required fee under 37 CFR 1.18(e).

---

[1] For example, if applicants dispute both the calculation of patent term adjustment under 37 CFR 1.702(a)(1) for Office failure to mail a first Office action or notice of allowance not later than fourteen months after the date on which the application was filed, and under 37 CFR 1.702(b) for Office failure to issue a patent within three years of the actual filing date of the application, then applicants must still timely file an application for patent term adjustment prior to the payment of the issue fee to contest the calculation of Office delay in issuing a first Office action or notice of allowance. See 37 CFR 1.705(b) and 35 U.S.C. 154(b)(3)(B). A dispute as to the calculation of the § 1.702(a)(1) period raised on request for reconsideration of patent term adjustment under 37 CFR 1.705(d) will be dismissed as untimely filed.

In view of the additional period of reduction pursuant to 37 CFR 1.704(c)(3), the patent term adjustment determination at the time of the mailing of the notice of allowance should be **one hundred thirty-six (136) days.**

The Office acknowledges submission of the $200.00 fee set forth in 37 CFR 1.18(e) for consideration of the application for patent term adjustment under 37 CFR 1.705(b).

The Office of Data Management has been advised of this decision. This application is being referred to the Office of Data Management for issuance of the patent.

Telephone inquiries specific to this decision should be directed to the undersigned at (571) 272-3211.

Christina Tartera Donnell

Christina Tartera Donnell
Senior Petitions Attorney
Office of Petitions

Enclosure: Copy of updated PAIR screen

11/918,191	MONOCLONAL ANTIBODIES AGAINST PROSTATE SPECIFIC MEMBRANE ANTIGEN (PSMA) LACKING IN FUCOSYL RESIDUES	12-16-2010::11:02:54

Patent Term Adjustments

Patent Term Adjustment (PTA) for Application Number: 11/918,191

Filing or 371(c) Date:	05-19-2008	Overlapping Days Between {A and B} or {A and C}:	0
Issue Date of Patent:	-	Non-Overlapping USPTO Delays:	219
A Delays:	219	PTO Manual Adjustments:	-83
B Delays:	0	Applicant Delays:	0
C Delays:	0	Total PTA Adjustments:	136

Patent Term Adjustment History **Explanation Of Calculations**

Number	Date	Contents Description	PTO (Days)	APPL (Days)	Start
65	12-16-2010	Adjustment of PTA Calculation by PTO		83	0
56	07-14-2010	Mail Notice of Allowance			0
55	07-12-2010	Notice of Allowance Data Verification Completed			0
53	07-12-2010	Issue Revision Completed			0
52	07-12-2010	Document Verification			0
51	06-17-2010	Examiner Interview Summary Record (PTOL - 413)			0
50	07-12-2010	Examiner's Amendment Communication			0
47	10-31-2008	Reference capture on IDS			0
46	10-31-2008	Information Disclosure Statement (IDS) Filed			0
45	07-12-2010	Notice of Allowability			0
44	07-06-2010	Miscellaneous Incoming Letter			0
43	07-01-2009	Information Disclosure Statement considered			0
42	10-31-2008	Information Disclosure Statement considered			0
40	06-24-2010	Paralegal TD Accepted			0
38	04-02-2010	Date Forwarded to Examiner			0
37	03-15-2010	Response to Election / Restriction Filed			0
35	02-23-2010	Mail Restriction Requirement	219		18
34	02-22-2010	Requirement for Restriction / Election			0

29	09-16-2009	Mail Miscellaneous Communication to Applicant	0
28	09-15-2009	Miscellaneous Communication to Applicant - No Action Count	0
27	08-20-2009	Miscellaneous Incoming Letter	0
26	07-01-2009	Information Disclosure Statement (IDS) Filed	0
25	07-01-2009	Information Disclosure Statement (IDS) Filed	0
24	03-05-2009	PG-Pub Issue Notification	0
23	02-23-2009	Case Docketed to Examiner in GAU	0
22	02-10-2009	Filing Receipt - Corrected	0
21	12-14-2008	IFW TSS Processing by Tech Center Complete	0
19	12-03-2008	Application Dispatched from OIPE	0
18	05-19-2008	371 Completion Date	0
17	11-26-2008	Sent to Classification Contractor	0
16	11-26-2008	Filing Receipt	0
15	11-26-2008	Notice of DO/EO Acceptance Mailed	0
14	05-19-2008	Additional Application Filing Fees	0
13	05-19-2008	CRF Disk Has Been Received by Preexam / Group / PCT	0
11	05-19-2008	A statement by one or more inventors satisfying the requirement under 35 USC 115, Oath of the Applic	0
10	10-31-2008	Information Disclosure Statement (IDS) Filed	0
9	06-16-2008	Error(s) in CRF Corrected by STIC	0

Close Window

UNITED STATES PATENT AND TRADEMARK OFFICE

COMMISSIONER FOR PATENTS
UNITED STATES PATENT AND TRADEMARK OFFICE
P.O. BOX 1450
ALEXANDRIA, VA 22313-1450
www.uspto.gov

BAKER & HOSTETLER LLP
WASHINGTON SQUARE, SUITE 1100
1050 CONNECTICUT AVE. N.W.
WASHINGTON, DC 20036-5304

MAILED

NOV 10 2010

PCT LEGAL ADMINISTRATION

In re Application of HAAS et al	:	
U.S. Application No.: 11/918,218	:	
PCT Application No.: PCT/CA2006/000122	:	
Int. Filing Date: 01 February 2006	:	DECISION
Priority Date Claimed: 15 April 2005	:	
Attorney Docket No.: 87334.6701	:	
For: METHOD AND SYSTEM FOR SAMPLE TESTING	:	

This is in response to applicant's correspondence filed on 24 February 2008, which is being treated as a renewed petition under 37 CFR 1.47(a) and a renewed request for status under 37 CFR 1.42.

BACKGROUND

On 01 February 2006, applicant filed international application PCT/CA2006/000122, which claimed priority of an earlier Canada application filed 15 April 2005. A copy of the international application was communicated to the USPTO from the International Bureau on 19 October 2006. The thirty-month period for paying the basic national fee in the United States expired on 15 October 2007.

On 11 October 2007, applicant filed national stage papers in the United States Designated/Elected Office (DO/EO/US). The submission was accompanied by, *inter alia*, the basic national fee required by 35 U.S.C. 371(c)(1).

On 11 December 2008, the DO/EO/US mailed a Notification of Missing Requirements Under 35 U.S.C. 371 (Form PCT/DO/EO/905), which indicated that an oath or declaration in compliance with 37 CFR 1.497 must be filed.

On 15 June 2009, applicant filed a petition under 37 CFR 1.47(a).

On 21 August 2009, this Office mailed a decision dismissing the 15 June 2009 petition.

On 22 December 2009, applicant filed a renewed petition under 37 CFR 1.47(a) and a request for status under 37 CFR 1.42.

On 24 February 2010, this Office mailed a decision dismissing the 22 December 2009 petition and request for status.

On 24 March 2010, applicant filed the instant renewed petition under 37 CFR 1.47(a) and renewed request for status under 37 CFR 1.42.

DISCUSSION

I. Request for Status under 37 CFR 1.42

37 CFR 1.42 provides, "In case of the death of the inventor, the legal representative (executor, administrator, etc.) of the deceased inventor may make the necessary oath or declaration, and apply for and obtain the patent."

Effective 07 November 2000, 37 CFR 1.497(b)(2) specifies that, where a person making the declaration is the legal representative of a deceased inventor, the declaration shall state the following: (1) the relationship of the person to the inventor, (2) the facts the inventor would have been required to state, upon information and belief, (3) that the person is the legal representative of the deceased inventor, and (4) the citizenship, residence, and mailing address of the legal representative.

The declarations filed on 24 March 2010 are in compliance with 37 CFR 1.42 and 1.497.

II. Renewed Petition under 37 CFR 1.47(a)

A petition under 37 CFR 1.47(a) must be accompanied by: (1) an oath or declaration by each applicant on his or her own behalf and on behalf of the nonsigning joint inventors, (2) factual proof that the missing joint inventors refuse to join in the application or cannot be reached after diligent effort, (3) the fee set forth in §1.17(i), and (4) the last known addresses of the nonsigning joint inventors.

Applicant previously satisfied items (2), (3), and (4) above.

With regard to item (1) above, the renewed petition includes proper declarations signed by the available inventors, each on his own behalf and on behalf of the nonsigning legal representative of the deceased inventor.

CONCLUSION

For the reasons set forth in §I above, the renewed request for status under 37 CFR 1.42 is GRANTED.

For the reasons set forth in §II above, the renewed petition under 37 CFR 1.47(a) is GRANTED.

The application has an International Filing Date under 35 U.S.C. 363 of 01 February 2006, and a date under 35 U.S.C. 371(c)(1), (c)(2), and (c)(4) of 24 March 2010.

As set forth in 37 CFR 1.47(a), a notice of the filing of this application will be forwarded to the nonsigning inventor at the last known address of record and will be published in the *Official Gazette*.

This application is being forwarded to the United States Designated/Elected Office (DO/EO/US) for further processing in accordance with this decision.

BryanLin

Bryan Lin
PCT Legal Examiner
PCT Legal Office

Telephone: 571-272-3303
Facsimile: 571-273-0459

UNITED STATES PATENT AND TRADEMARK OFFICE

COMMISSIONER FOR PATENTS
UNITED STATES PATENT AND TRADEMARK OFFICE
P.O. BOX 1450
ALEXANDRIA, VA 22313-1450
www.uspto.gov

Susan Hertz
5230 Rome Court
Burlington, Ontario, L7L 7B7
CANADA

MAILED
NOV 10 2010
PCT LEGAL ADMINISTRATION

In re Application of HAAS et al
U.S. Application No.: 11/918,218
PCT Application No.: PCT/CA2006/000122
Int. Filing Date: 01 February 2006
Priority Date Claimed: 15 April 2005
For: METHOD AND SYSTEM FOR SAMPLE TESTING

Dear Susan Hertz:

You are named as the legal representative of a joint inventor in the above-captioned United States national stage application, filed under the provisions of 37 CFR 1.47(a) and 35 U.S.C. 116. Should a patent be granted, you will be designated as an applicant.

As a named applicant, you are entitled to inspect any paper in the file wrapper of the application, order copies of all or any part thereof (at a prepaid cost set forth in 37 CFR 1.19) or to make your position of record in the application. Alternatively, you may arrange to do any of the preceding through a registered patent agent or attorney presenting written authorization from you. If you choose to join in the application, counsel of record (see below) would presumably assist you. Joining in the application would entail the filing of an appropriate oath or declaration by you pursuant to 37 CFR 1.63.

Bryan Lin

Bryan Lin
PCT Legal Examiner
PCT Legal Office
Telephone: 571-272-3303
Facsimile: 571-273-0459

BAKER & HOSTETLER LLP
WASHINGTON SQUARE, SUITE 1100
1050 CONNECTICUT AVE. N.W.
WASHINGTON, DC 20036-5304
Attorney Docket No.: 87334.6701

UNITED STATES PATENT AND TRADEMARK OFFICE

Commissioner for Patents
United States Patent and Trademark Office
P.O. Box 1450
Alexandria, VA 22313-1450
www.uspto.gov

1 2 AUG 2010

23373
SUGHRUE MION PLLC
2100 Pennsylvania Avenue, N.W.
Suite 800
Washington, DC 20037

In re Application of :
PANDEY *et al* :
Application No.: 11/918,235 :
PCT No.: PCT/IB2006/000854 :
Int. Filing Date: 12 April 2006 : **DECISION**
Priority Date: 13 April 2005 :
Attorney Docket No.: Q104317 :
For: NOVEL HETEROCYCLIC :
DERIVATIVES :

This is a decision on the response to decision filed on 23 June 2010 which is treated as a renewed petition under 37 CFR 1.42.

BACKGROUND

On 28 April 2010, a decision dismissing applicants' renewed petition under 37 CFR 1.42 was mailed. Applicants were given two months to respond with extensions of time available.

On 23 June 2010, applicants filed the subject response which included a new declaration executed by Nishikanth Reddy GADDAM as the legal representative of deceased inventor, Gaddam Om REDDY.

DISCUSSION

The prior response was not accepted under 37 CFR 1.42 for the following reason. The name and citizenship information for all inventors, as well as the citizenship, residence and address of the legal representative is required to be recorded on the declaration pursuant to 37 CFR 1.497(a) and (b). The declaration provided did not distinguish whether the information listed in the deceased inventor's box was for the deceased inventor, or the legal representative.

In the renewed response, applicants submitted a new declaration executed by Nishikanth Reddy GADDAM as the legal representative of deceased inventor, Gaddam Om REDDY. The eight inventors names and citizenship information are listed on the declaration. The legal representative information (citizenship, residence and address) is recorded on the declaration in a separate box. This declaration is in compliance with 37 CFR 1.497(a) and (b).

CONCLUSION

The renewed papers filed under 37 CFR 1.42 are **ACCEPTED**.

Applicants have completed the requirements for acceptance under 35 U.S.C. 371(c). The application has an international filing date of 12 April 2006, under 35 U.S.C. 363, and a 35 U.S.C. 371 date of 23 June 2010.

This application will be forwarded to DO/EO/US for further processing.

James Thomson
Attorney Advisor
Office of PCT Legal Administration

Tel.: (571) 272-3302

UNITED STATES PATENT AND TRADEMARK OFFICE

Commissioner for Patents
United States Patent and Trademark Office
P.O. Box 1450
Alexandria, VA 22313-1450
www.uspto.gov

NELSON MULLINS RILEY &
SCARBOROUGH LLP
FLOOR 30, SUITE 3000
ONE POST OFFICE SQUARE
BOSTON MA 02109

MAILED

JUL 07 2011

OFFICE OF PETITIONS

In re Application of	:	
Matsouka et al.	:	
Patent Number: 7,915,050	:	DECISION ON
Issue Date: 03/29/2011	:	APPLICATION FOR
Application No. 11/918378	:	PATENT TERM ADJUSTMENT
Filing or 371(c) Date: 02/27/2008	:	and
Attorney Docket No.	:	NOTICE OF INTENT TO ISSUE
SHO-030US	:	CERTIFICATE OF CORRECTION

This is a decision on the petition filed on May 31, 2011 which is being treated as a petition under 37 CFR 1.705(d) requesting that the patent term adjustment indicated on the above-identified patent be corrected to indicate that the term of the above-identified patent is extended or adjusted by five hundred eighteen (518) days.

The petition to correct the patent term adjustment indicated on the above-identified patent to indicate that the term of the above-identified patent is extended or adjusted by five hundred eighteen (518) days is **GRANTED**.

The Office acknowledges submission of the $200.00 fee set forth in 37 CFR 1.18(e). No additional fees are required.

The application is being forwarded to the Certificates of Branch for issuance of a certificate of correction. The Office will issue a certificate of correction indicating that the term of the above-identified patent is extended or adjusted by **five hundred eighteen (518) days**.

Telephone inquiries specific to this matter should be directed to the undersigned at (571) 272-3232.

/DLW/

Derek L. Woods
Attorney
Office of Petitions

Enclosure: Copy of DRAFT Certificate of Correction

UNITED STATES PATENT AND TRADEMARK OFFICE

CERTIFICATE OF CORRECTION

PATENT : 7,915,050 B2

DATED : **March 29, 2011**

INVENTOR(S) : Matsouka et al.

It is certified that error appears in the above-identified patent and that said Letters Patent is hereby corrected as shown below:

On the cover page,

[*] Notice: Subject to any disclaimer, the term of this patent is extended or adjusted under 35 USC 154(b) by 478 days.

Delete the phrase "by 478 days" and insert – by 518 days--

UNITED STATES PATENT AND TRADEMARK OFFICE

Commissioner for Patents
United States Patent and Trademark Office
P.O. Box 1450
Alexandria, VA 22313-1450
www.uspto.gov

Decision Date : November 4,2011

In re Application of :

Yu Zhou

Application No : 11918391

Filed : 26-Jan-2009

Attorney Docket No : 577772000300

DECISION ON REQUEST TO WITHDRAW AS ATTORNEY/AGENTOF RECORD

This is an electronic decision on the Request to Withdraw as attorney or agent of record under 37 CFR § 1.36(b), filed November 4,2011

The request is **APPROVED.**

The request was signed by Christopher B. Eide (registration no. 48375) on behalf of all attorneys/agents associated with Customer Number 25226 . All attorneys/agents associated with Cusotmer Number 25226 have been withdrawn.

Since there are no remaining attorneys of record, all future communications from the Office will be directed to the first named inventor or assignee that has properly made itself of record pursuant to 37 CFR 3.71, with correspondence address:

Name	H2Volt, Inc.
Name2	
Address 1	6566 F Cottonwood Circle
Address 2	
City	Dublin
State	CA
Postal Code	94568
Country	US

As a reminder, requester is required to inform the first named inventor or assignee that has properly made itself of record pursuant to 37 CFR 3.71 of the electronically processed petition.

Telephone inquiries concerning this decision should be directed to the Patent Electronic Business Center (EBC) at 866-217-9197.

Office of Petitions

Doc Code: PET.AUTO **Document Description: Petition automatically granted by EFS-Web**	PTO/SB/83 U.S. Patent and Trademark Office Department of Commerce

Electronic Petition Request	**REQUEST FOR WITHDRAWAL AS ATTORNEY OR AGENT AND CHANGE OF CORRESPONDENCE ADDRESS**
Application Number	11918391
Filing Date	26-Jan-2009
First Named Inventor	Yu Zhou
Art Unit	1726
Examiner Name	CYNTHIA LEE
Attorney Docket Number	577772000300
Title	Integrated Fuel and Fuel Cell Device

◉ Please withdraw me as attorney or agent for the above identified patent application and the practitioners of record associated with Customer Number: 25226

The reason(s) for this request are those described in 37 CFR:

10.40(c)(1)(iv)

Certifications

☒ I/We have given reasonable notice to the client, prior to the expiration of the response period, that the practitioner(s) intend to withdraw from employment

☒ I/We have delivered to the client or a duly authorized representative of the client all papers and property (including funds) to which the client is entitled

☒ I/We have notified the client of any responses that may be due and the time frame within which the client must respond

Change the correspondence address and direct all future correspondence to the first named inventor or assignee that has properly made itself of record pursuant to 37 CFR 3.71:

Name	H2Volt, Inc.
Address	6566 F Cottonwood Circle
City	Dublin
State	CA
Postal Code	94568
Country	US

I am authorized to sign on behalf of myself and all withdrawing practitioners.	
Signature	/Christopher Eide/
Name	Christopher B. Eide
Registration Number	48375

UNITED STATES PATENT AND TRADEMARK OFFICE

UNITED STATES DEPARTMENT OF COMMERCE
United States Patent and Trademark Office
Address: COMMISSIONER FOR PATENTS
P.O. Box 1450
Alexandria, Virginia 22313-1450
www.uspto.gov

APPLICATION NO.	FILING DATE	FIRST NAMED INVENTOR	ATTORNEY DOCKET NO.	CONFIRMATION NO.
11/918,393	10/12/2007	Noorjahan Panjwani	34724-063	3955

48425 7590 02/24/2011
LAWSON & WEITZEN, LLP
88 BLACK FALCON AVE
SUITE 345
BOSTON, MA 02210

EXAMINER
CARLSON, KAREN C

ART UNIT	PAPER NUMBER
1656	

MAIL DATE	DELIVERY MODE
02/24/2011	PAPER

Please find below and/or attached an Office communication concerning this application or proceeding.

The time period for reply, if any, is set in the attached communication.

UNITED STATES PATENT AND TRADEMARK OFFICE

Commissioner for Patents
United States Patent and Trademark Office
P.O. Box 1450
Alexandria, VA 22313-1450
www.uspto.gov

FEB 2 4 2011

LAWSON & WEITZEN, LLP
88 BLACK FALCON AVE
SUITE 345
BOSTON MA 02210

In re Application of:	:
Noorjahan Panjwani	:
Serial No.: 11/918,393	: PETITION DECISION
Filed: October 12, 2007	:
Attorney Docket No.: **34724-063**	:

This is in response to the petition filed February 15, 2011 under 37 CFR § 1.181, requesting that the finality of the Office action of January 27, 2011 be withdrawn.

BACKGROUND

Relevant parts of the prosecution history are summarized below.

The examiner mailed a final Office action on January 27, 2011.

On January 6, 2011, applicant filed a Request for Continued Examination (RCE) along with the appropriate fees. In this RCE, applicant fulfilled the requirements of 37 C.F.R. § 1.114 (submission) and indicated that said submission, containing claim amendments was to be considered for examination.

On January 27, 2011, the examiner mailed a final Office action setting a three month statutory limit for reply.

In response thereto, applicant filed this petition on February 15, 2011 under 37 CFR § 1.181, requesting that the finality of the Office action of January 27, 2011 be withdrawn.

DISCUSSION

The petition and the file history have been carefully considered.

In the petition filed on February 15, 2011, applicant argues "Factual analysis shows that claims in the Amendment and Response had been amended (page 3). Independent claim 27 was amended inter alia to delete "tear film preparation" and to add "an ophthalmic solution". The Office action newly rejects claims under 35 U.S.C. § 103 in view of a combination of publications including newly cited reference Leahy et al., U.S. patent number 6,281,192 B1 issued August 28, 2001. Applicant asserts that finality of the outstanding Office action having a new rejection of amended claims is improper. Applicant respectfully requests reversal of finality of the Office action to have a fair opportunity to respond to the new ground of rejection based on the present claims."

Applicant's points are well-taken and found persuasive. For example, as applicant indicated above, claim 27 was amended to require "an ophthalmic solution" - a limitation not previously considered by the examiner. Thus, it is decided that the final Office action mailed on January 27, 2011 is premature and in error because the claims are no longer drawn to the same invention and a new ground of rejection has been applied. The finality of said rejection is hereby WITHDRAWN in favor of applicant.

DECISION

The petition is **GRANTED.**

The Office action mailed January 27, 2011 is hereby vacated to the extent that it was made "final" and the Office action is now considered to be a non-final Office action.

Should there be any questions about this decision please contact Marianne C. Seidel, by letter addressed to Director, TC 1600, at the address listed above, or by telephone at 571-272-0584 or by facsimile sent to the general Office facsimile number, 571-273-8300.

JMstone
Jacqueline Stone
Director, Technology Center 1600

UNITED STATES PATENT AND TRADEMARK OFFICE

Commissioner for Patents
United States Patent and Trademark Office
P.O. Box 1450
Alexandria, VA 22313-1450
www.uspto.gov

DONN K. HARMS
PATENT & TRADEMARK LAW CENTER
SUITE 100
12702 VIA CORTINA
DEL MAR CA 92014

MAILED

MAR 23 2012

OFFICE OF PETITIONS

In re Application of :
Nguyen :
Application No.: 11/918,461 : ON PETITION
Filed: October 11, 2007 :
Attorney Docket No: **3992-PAT** :

This is in response to the petition under 37 CFR 1.137(b) filed February 27, 2012.

The petition is DISMISSED.

Any request for reconsideration of this decision must be submitted within TWO (2) MONTHS from the mail date of this decision. Extensions of time under 37 CFR 1.136(a) are permitted. The reconsideration request should include a cover letter entitled "Renewed Petition" under 37 CFR 1.137(b)."

The above-cited application became abandoned for failure to reply in a timely manner to the non-final Office action mailed, July 10, 2009, which set a shortened statutory period for reply of three (3) months from its mailing date. No extension of time pursuant to 37 CFR 1.136(a) was obtained within the allowable period. Accordingly, the application became abandoned on October 11, 2009. A Notice of Abandonment was mailed February 23, 2010.

Effective December 1, 1997, the provisions of 37 CFR 1.137(b) now provide that where the delay in reply was unintentional, a petition may be filed to revive an abandoned application or a lapsed patent pursuant to 37 CFR 1.137(b). A grantable petition pursuant to 37 CFR 1.137(b) must be accompanied by:

(1) the required reply, unless previously filed. In a non-provisional application abandoned for failure to prosecute, the required reply may be met by the filing of a continuing application. In an application or patent, abandoned or lapsed for failure to pay the issue fee, or any portion thereof, the required reply must be the payment of the issue fee or any outstanding balance thereof.

(2) the petition fee as set forth in 37 CFR 1.17(m);

(3) a statement that the entire delay in filing the required reply from the due date for the reply until the filing of a grantable petition pursuant to 37 CFR 1.137(b) was unintentional. The Commissioner may require additional information where there is a question whether the delay was unintentional; and

(4) any terminal disclaimer (and fee set forth in 37 CFR 1.20(d)) required pursuant to 37 CFR 1.137(c).

The instant petition does not satisfy the requirements of item (3) above.

As to Item (3), the *Manual of Paten Examining Procedure*, Section 7711.03(c) provides, in pertinent part, that:

> The Office does not generally question whether there has been an intentional or otherwise impermissible delay in filing an initial petition pursuant to 37 CFR 1.137(a) or (b), when such petition is filed: (A) within 3 months of the date the applicant is first notified that the application is abandoned; **and** (2) within 1 year of the date of abandonment of the application. Thus, an applicant seeking revival of an abandoned application is advised to file a petition pursuant to 37 CFR 1.137 within 3 months of the first notification that the application is abandoned to avoid the question of intentional delay being raised by the Office (or by third parties seeking to challenge any patent issuing from the application).
>
> Where a petition pursuant to 37 CFR 1.137(a) or (b) is not filed within 3 months of the date the applicant is first notified that the application is abandoned, the Office may consider there to be a question as to whether the delay was unavoidable or unintentional. In such instances,
>
> (A) the Office will require a showing as to how the delay between the date the applicant was first notified that the application was abandoned and the date a 37 CFR 1.137(a) petition was filed was "unavoidable"; or
>
> (B) the Office may require further information as to the cause of the delay between the date the applicant was first notified that the application was abandoned and the date a 37 CFR 1.137(b) petition was filed, and how such delay was "unintentional."
>
> To avoid delay in the consideration of the merits of a petition under 37 CFR 1.137(a) or (b) in instances in which such petition was not filed within 3 months of the date the applicant was first notified that the application was abandoned, applicants should include a showing as to how the delay between the date the applicant was first notified by the Office that the application was abandoned and the filing of a petition under 37 CFR 1.137 was (A) "unavoidable" in a petition under 37 CFR 1.137(a); or (B) "unintentional" in a petition under 37 CFR 1.137(b).

The subject application has been abandoned for more than two years and it has been an extended period since the Notice of Abandonment was mailed. Petitioner did not provide not explanation for delay in filing the instant petition and how the delay was unintentional. Accordingly, the renewed petition must be accompanied by an explanation for said delay including, but not limited to, the considerations provided in MPEP § 711.03(c) cited above.

Further correspondence with respect to this matter should be addressed as follows:

By mail:

Mail Stop Petitions
Commissioner for Patents

In re Application No. 11/918,461

United States Patent and Trademark Office
Box 1450
Alexandria, VA 22313-1450

By facsimile: (571) 273-8300
Attn: Office of Petitions

Telephone inquiries concerning this decision may be directed to the undersigned at (571) 272-3222.

/Kenya A. McLaughlin/

Kenya A. McLaughlin
Petitions Attorney
Office of Petitions

UNITED STATES PATENT AND TRADEMARK OFFICE

Commissioner for Patents
United States Patent and Trademark Office
P.O. Box 1450
Alexandria, VA 22313-1450
www.uspto.gov

AMIN TALATI, LLC
225 North Michigan Avenue
Suite 700
CHICAGO IL 60601

MAILED

NOV 05 2010

OFFICE OF PETITIONS

In re Application of	:	
Shilpan Pravinchandra Patel et al.	:	
Application No. 11/918,516	:	DECISION ON PETITION
Filed: October 15, 2007	:	TO WITHDRAW
Attorney Docket No. ACP-106	:	FROM RECORD
	:	

This is a decision on the Request to Withdraw as attorney or agent of record under 37 C.F.R. § 1.36(b), filed October 6, 2010.

The request is **APPROVED**.

A grantable request to withdraw as attorney/agent of record must be signed by every attorney/agent seeking to withdraw or contain a clear indication that one attorney is signing on behalf of another/others. A request to withdraw will not be approved unless at least 30 (thirty) days would remain between the date of approval and the later of the expiration date of a time to file a response or the expiration date of the maximum time period which can be extended under 37 C.F.R. § 1.136(a).

The request was signed by Janine A. Moderson on behalf of all attorneys/agents associated with customer number 51079. All attorneys/agents associated with customer number 51079 have been withdrawn.

The correspondence address has been changed and is copied below.

Telephone inquiries concerning this decision should be directed to Kimberly Inabinet at 571-272-4618.

/Kimberly Inabinet/

Kimberly Inabinet
Petitions Examiner
Office of Petitions

cc: Arrow Coated Product, Ltd.
5-D, Laxmi Industrial Estate,
New Link Road, Andheri (West)
Mumbai, Maharashtra 400053
INDIA

UNITED STATES PATENT AND TRADEMARK OFFICE

UNITED STATES DEPARTMENT OF COMMERCE
United States Patent and Trademark Office
Address: COMMISSIONER FOR PATENTS
P.O. Box 1450
Alexandria, Virginia 22313-1450
www.uspto.gov

APPLICATION NUMBER	FILING OR 371(C) DATE	FIRST NAMED APPLICANT	ATTY. DOCKET NO./TITLE
11/918,516	10/15/2007	Shilpan Pravinchandra Patel	ACP-106

CONFIRMATION NO. 4986

POWER OF ATTORNEY NOTICE

51079
AMIN TALATI, LLC
225 North Michigan Avenue
Suite 700
CHICAGO, IL 60601

OC000000044370577

Date Mailed: 11/05/2010

NOTICE REGARDING CHANGE OF POWER OF ATTORNEY

This is in response to the Power of Attorney filed 10/06/2010.

- The withdrawal as attorney in this application has been accepted. Future correspondence will be mailed to the new address of record. 37 CFR 1.33.

/kainabinet/

Office of Data Management, Application Assistance Unit (571) 272-4000, or (571) 272-4200, or 1-888-786-0101

1 - SEP 2010

UNITED STATES PATENT and TRADEMARK OFFICE

COMMISSIONER FOR PATENTS
UNITED STATES PATENT AND TRADEMARK OFFICE
P.O BOX 1450
ALEXANDRIA, VA 22313-1450
www.uspto.gov

OWENS CORNING
2790 COLUMBUS ROAD
GRANVILLE OH 43023

In re Application of	DECISION ON
Adzima et al	
Application No.: 11/918,591	
PCT No.: PCT/US2006/13954	
Int. Filing Date: 12 April 2006	PETITION UNDER
Priority Date: 15 April 2005	
Attorney's Docket No.: 25566B	
For: Compostion For Forming Wet Fiber Based	
Composite Materials	37 CFR 1.137(b)

This decision is in response to applicant's "Petition For Revival Of An Applicant For Abandoned Unintentionally Under 37 CFR 1.137(b)," filed on 12 May 2010.

BACKGROUND

On 12 April 2006, this international application was filed, claiming an earliest priority date of 15 April 2005.

The deadline for paying the basic national fee in the United States under 35 U.S.C. 371 and 37 CFR 1.495 was 15 October 2007. This international application became abandoned with respect to the United States at midnight on 15 October 2007 for failure to pay the required basic national fee.

On 15 October 2007, applicant filed in the United States Patent and Trademark Office (PTO) a transmittal letter for entry into the national stage in the U.S. under 35 U.S.C. 371, which was accompanied by, *inter alia*, the copy of the international application. However, the national basic fee and executed declaration were not provided at such time.

On 18 August 2009, the United States Patent and Trademark Office mailed the Notification of Abandonment (PCT/DO/EO/909) since the applicant has failed to provide the full U.S. Basic National Fee by 30 months (37 CFR 1.495(b)(2)).

On 12 May 2010, applicants filed the instant petition under 37 CFR 1.137(b), which was accompanied by the petition fee and the basic national fee.

DISCUSSION

A grantable petition to revive an abandoned application under 37 CFR 1.137(b) must be accompanied by (1) the required reply, unless previously filed. In a nonprovisional application abandoned for failure to prosecute, the required reply may be met by the filing of a continuing application; (2) the petition fee as set forth in § 1.17(m); and (3) a statement that the entire delay in filing the required reply from the due date for the reply until the filing of a grantable petition pursuant to this paragraph was unintentional. The Commissioner may require additional information where there is a question whether the delay was unintentional; and (4) any terminal disclaimer (and fee as set forth in § 1.20 (d)) required pursuant to paragraph (c) of this section.

Petitioner has provided: (1) the proper reply by submitting the basic national filing fee, (2) the petition fee set forth in §1.17(m) and (3) the proper statement under 137(b)(3). In this application, no terminal disclaimer is required.

Accordingly, the petition is deemed to satisfy requirements (1), (2), (3), and (4) under 37 CFR 1.137(b).

DECISION

The petition under 37 CFR 1.137(b) is **GRANTED**.

This application is being returned to the United States Designated/Elected Office (DO/EO/US) for continued processing.

Rafael Bacares
PCT Legal Examiner
PCT Legal Office
Telephone: (571) 272-3276
Facsimile: (571) 272-0459

UNITED STATES PATENT and TRADEMARK OFFICE

COMMISSIONER FOR PATENTS
UNITED STATES PATENT AND TRADEMARK OFFICE
P.O BOX 1450
ALEXANDRIA, VA 22313-1450
www.uspto.gov

OWENS CORNING
2790 COLUMBUS ROAD
GRANVILLE OH 43023

MAILED
JUN 17 2011
PCT LEGAL ADMINISTRATION

In re Application of	:	DECISION ON
Adzima et al	:	
Application No: 11/918,591	:	
PCT No.: PCT/US2006/13954	:	
Int. Filing Date: 12 April 2006	:	PETITION UNDER
Priority Date: 15 April 2005	:	
Attorney's Docket No.: 2556B	:	
For: COMPOSITION FOR... MATERIALS	:	37 CFR 1.47(a)

This is in response to the "PETITION FOR FIVE (5)... PETITION UNDER 37 CFR 1.47(a)" filed on 18 April 2011, which is being treated as a petition under 37 CFR 1.47(a). The petition fee is now $200.00 for a petition under 37 CFR 1.47(a) so $70 has been charged to petitioner's deposit account 150860 as stipulated in the petition letter filed on 18 April 2011.

BACKGROUND

On 01 September 2010, the USPTO granted a petition under 37 CFR 1.137(b).

On 17 September 2010, the United States Designated/Elected Office (DO/EO/US) mailed a "NOTIFICATION OF MISSING REQUIREMENTS UNDER 35 U.S.C. 371 IN THE UNITED STATES DESIGNATED/ELECTED OFFICE (DO/EO/US)" (Form PCT/DO/EO/905) which informed applicant, inter alia, that an "Oath or Declaration of the inventors, in compliance with 37 CFR 1.497(a), and (b), identifying the application by the International application number and international filing date... the declaration is missing." The notice indicated that the items must be submitted within two months from date of mailing or by 32 months from the priority date of the application, in order to avoid abandonment of the national stage application.

On 18 April 2006, petitioner filed the present petition, a declaration in support of filing on behalf of omitted joint inventors Paul R. Krumlauf and Kevin S Guigley.

DISCUSSION

PETITION UNDER 37 CFR 1.47(a):

A petition under 37 CFR 1.47(a) must be accompanied by (1) the fee under 37 CFR 1.17(g), (2) factual proof that the missing joint inventor refuses to execute the application or cannot be reached after diligent effort, (3) a statement of the last known address of the missing inventor, and (4) an oath or declaration by each 37 CFR 1.47(a) applicant on his or her own behalf and on behalf of the non-signing joint inventor.

Furthermore, section 409.03(d) of the Manual of Patent Examining Procedure (M.P.E.P.) **Proof of Unavailability or Refusal**, the relevant sections states, in part:

REFUSAL TO JOIN:

A refusal by an inventor to sign an oath or declaration when the inventor has not been presented with the application papers does not itself suggest that the inventor is refusing to join the application unless it is clear that the inventor understands exactly what he or she is being asked to sign and refuses to accept the application papers. A copy of the application papers should be sent to the last known address of the nonsigning inventor, or, if the nonsigning inventor is represented by counsel, to the address of the nonsigning inventor's attorney.

Where a refusal of the inventor to sign the application papers is alleged, the circumstances of the presentation of the application papers and of the refusal must be specified in a statement of facts by the person who presented the inventor with the application papers and/or to whom the refusal was made. Statements by a party not present when an oral refusal is made will not be accepted.

Proof that a *bona fide* attempt was made to present a copy of the application papers (specification, including claims, drawings, and oath or declaration) to the nonsigning inventor for signature, but the inventor refused to accept delivery of the papers or expressly stated that the application papers should not be sent, may be sufficient. When there is an express oral refusal, that fact along with the time and place of the refusal must be stated in the statement of facts. When there is an express written refusal, a copy of the document evidencing that refusal must be made part of the statement of facts. The document may be redacted to remove material not related to the inventor's reasons for refusal.

When it is concluded by the **37 CFR 1.47** applicant that a nonsigning inventor's conduct constitutes a refusal, all facts upon which that conclusion is based should be stated in the statement of facts in support of the petition or directly in the petition. If there is documentary evidence to support facts alleged in the petition or in any statement of facts, such evidence should be submitted. Whenever a nonsigning inventor gives a reason for refusing to sign the application oath or declaration, that reason should be stated in the petition.

Petitioner has satisfied requirements (1) and (3) - (4) of 37 CFR 1.47(a) but not requirement (2).

Regarding requirement (1), petitioner has now provided the complete petition fee of $200.00 under 37 CFR 1.17(g).

Regarding requirement (2), in this case, Mr. Drew has not sufficiently demonstrated that a copy of the application papers were presented to the non-signing joint inventors, Krumlauf and Guigley. It is unclear what documents were forwarded to them because there is no specific statement referring to a copy of the application papers (specification, including claims, drawings, and oath or declaration) as required under MPEP. 409.03(d). The papers forwarded to them do not appear to include a copy of the complete application papers since only the declaration was mentioned as being sent to them for their review and signature (¶¶ 6, 7, 10).

In addition, although the packages appeared to have been delivered, it is not the proper delivery method as UPS Proof of Delivery indicates that one package was left on "Rear Door" and the second package indicates "Other released." Consequently, it is unclear if they received the papers because there is no signature of receipt by someone at their residences signing for the packages.

The petition then states that "any and all other attempts by employees of the Assignee to reach Krumlauf (¶8 and 11) and Guigley have gone unanswered" is insufficient has petitioner has not provided any specifics as to the attempts. Moreover, petitioner states that Mr. Krumlauf is on vacation through April 18 so it is unclear how petitioner expected Mr. Krumlauf to sign the declaration by April 17, 2011 (¶7)

Finally, it is not clear from the petition that it was Mr. Drew who performed the actions listed in the petition and the person who mailed the application papers, and has first hand knowledge of those facts as required by MPEP Section 409.03(d). If Mr. Drew was not the person who performed the actions listed, petitioner will need to submit statements, with specific facts on the actions referred in the petition by the persons who have first-hand knowledge of such facts.

Where the Office is being asked to accept the silence of the nonsigning inventor's as evidence of a refusal to sign, petitioner must provide some evidence that the application materials have been received by the nonsigning applicant. Absent further firsthand evidence that the application and request for signature were received by the nonsigning inventor, item (2) cannot be considered satisfied.

If joint inventors Krumlauf and Guigley do not still reside in their addresses, then petitioner is under an obligation to try to find or reach them. Where there is an inability to find or reach a joint inventor "after diligent effort," petitioner may file a statement of facts that fully describes the exact facts which are relied on to establish that a diligent effort was made under **37 CFR 1.47**.

Regarding requirement 3, petitioner has provided a statement of the last known address of the missing joint inventors.

Mr. Paul R. Krumlauf
171 S. Church Street
Thornville, Ohio 43076

Mr. Kevin S. Guigley
2754 Hallie Lane
Granville, Ohio 43023

Regarding requirement 4, petitioner has provided an executed declaration without the signatures of joint inventors Krumlauf and Guigley.

Consequently, the current record does not sufficiently establish Mr. Krumlauf and Guigley's refusal to join in the application because petitioner has failed to show that a *bona fide* attempt was made to deliver the complete application to them and that they received and signed for the papers, and did not returned the required signed papers.

CONCLUSION

The petition under 37 CFR 1.47(a) is **DISMISSED** without prejudice.

If reconsideration of the merits of the petition under 37 CFR 1.47(a) is desired, applicant must file a request for reconsideration within **TWO (2) MONTHS** from the mail date of this Decision. Any reconsideration request should include a cover letter entitled "Renewed Petition Under 37 CFR 1.47(a)." Extensions of time are available under 37 CFR 1.136(a). Failure to timely file the proper response will result in ABANDONMENT.

Any further correspondence with respect to this matter may be filed electronically via EFS-Web selecting the document description "Petition for review and processing by the PCT Legal Office" or by mail addressed to Mail Stop PCT, Commissioner for Patents, Office of PCT Legal Administration, P.O. Box 1450, Alexandria, Virginia 22313-1450, with the contents of the letter marked to the attention of the Office of PCT Legal Administration.

Rafael Bacares
PCT Legal Examiner
PCT Legal Office
Telephone: (571) 272-3276
Facsimile: (571) 273-0459

UNITED STATES PATENT and TRADEMARK OFFICE

COMMISSIONER FOR PATENTS
UNITED STATES PATENT AND TRADEMARK OFFICE
P.O BOX 1450
ALEXANDRIA, VA 22313-1450
www.uspto.gov

OWENS CORNING
2790 COLUMBUS ROAD
GRANVILLE OH 43023

MAILED
OCT 19 2011
PCT LEGAL ADMINISTRATION

In re Application of	:	DECISION ON
Adzima et al	:	
Application No: 11/918,591	:	
PCT No.: PCT/US2006/13954	:	
Int. Filing Date: 12 April 2006	:	PETITION UNDER
Priority Date: 15 April 2005	:	
Attorney's Docket No.: 2556B	:	
For: COMPOSITION FOR... MATERIALS	:	37 CFR 1.47(a)

This decision is in response to applicants' "RENEWED PETITION UNDER 37 CFR 1.47(a)" submitted on 17 August 2011.

BACKGROUND

The decision by this Office dated 17 June 2011 indicated that requirement (2) had not been satisfied.

On 17 August 2011, petitioner filed this renewed petition accompanied, inter alia, an executed declaration signed by joint inventors Paul R. Krumlauf and Kevin S. Guigley, and the declaration is now signed by all the joint inventors.

DISCUSSION

The renewed petition includes an executed declaration signed by Paul R. Krumlauf and Kevin S. Guigley. As a result, the declaration is now signed by all the joint inventors.

Accordingly, the declaration submitted on 17 August 2011 complies with 37 CFR 1.497(a) and (b).

CONCLUSION

The petition under 37 CFR 1.47(a) is **MOOT**.

This application is being returned to the United States Designated/Elected Office (DO/EO/US) for continued processing consistent with this decision.

Rafael Bacares
PCT Legal Examiner
PCT Legal Office
Tel: (571) 272-3276
Fax: (571) 273-0459

UNITED STATES PATENT AND TRADEMARK OFFICE

UNITED STATES DEPARTMENT OF COMMERCE
United States Patent and Trademark Office
Address: COMMISSIONER FOR PATENTS
P.O. Box 1450
Alexandria, Virginia 22313-1450
www.uspto.gov

APPLICATION NO.	FILING DATE	FIRST NAMED INVENTOR	ATTORNEY DOCKET NO.	CONFIRMATION NO.
11/918,597	10/15/2007	Alexander Görz	2005P00806WOUS	4823

46726 7590 04/11/2011
BSH HOME APPLIANCES CORPORATION
INTELLECTUAL PROPERTY DEPARTMENT
100 BOSCH BOULEVARD
NEW BERN, NC 28562

EXAMINER
BAUER, CASSEY D

ART UNIT	PAPER NUMBER
3784	

NOTIFICATION DATE	DELIVERY MODE
04/11/2011	ELECTRONIC

Please find below and/or attached an Office communication concerning this application or proceeding.

The time period for reply, if any, is set in the attached communication.

Notice of the Office communication was sent electronically on above-indicated "Notification Date" to the following e-mail address(es):

NBN-IntelProp@bshg.com

UNITED STATES PATENT AND TRADEMARK OFFICE

Commissioner for Patents
United States Patent and Trademark Office
P.O. Box 1450
Alexandria, VA 22313-1450
www.uspto.gov

BSH HOME APPLIANCES CORPORATION
INTELLECTUAL PROPERTY DEPARTMENT
100 BOSCH BOULEVARD
NEW BERN NC 28562

In re Application of: GöRZ, ALEXANDER et al Serial No. 11/918,597 Filed: Oct. 15, 2007 Docket: 2005P00806WOUS Title: REFRIGERATOR HAVING AN INSULATED COOL AIR DUCT	DECISION ON PETITION UNDER 37 CFR § 1.181

This is a decision on the request filed December 17, 2010 under 37 CFR 1.181 requesting withdrawal of the finality of the last Office action mailed October 29, 2010.

The petition is **Granted.**

After consulting with the examiner, it was agreed the finality of the Office action of October 29, 2010 should be withdrawn. As such, the Office action mailed on October 29, 2010 will be designated as non-final Office action. Since the finality is being withdrawn, the amendment of December 17, 2010 responding to the Office action of October 29, 2010 will be treated as a 37 CFR § 1.111 amendment.

The application is being forwarded to the examiner via Supervisory Patent Examiner of the Art Unit for consideration of amendment filed on December 17, 2010. Any inquiry regarding this decision should be directed to Henry C. Yuen, Special Programs Examiner, at (571) 272-4856.

PETITION GRANTED.

Angela D. Sykes for
Donald T. Hajec, Director
Technology Center 3700

UNITED STATES PATENT AND TRADEMARK OFFICE

Commissioner for Patents
United States Patent and Trademark Office
P.O. Box 1450

MAILED

SEP 12 2011

OFFICE OF PETITIONS

Invention Quebec
8065 Viau Blvd
Suite 202
Montreal CA CANADA

In re Application of
Michel LARBRISSEASU
Application No. 11/918,647
Filed: October 17, 2007
Atty. Docket No.: 9374-1

ON PETITION

This is in response to the petition under 37 CFR 1.137(b), filed August 25, 2011, to revive the above-identified application.

The petition is **GRANTED**.

The application became abandoned for failure to reply in a timely manner to the final Office action mailed July 28, 2010, which set a shortened statutory period for reply of three (3) months. No extension of time under the provisions of 37 CFR 1.136(a) was obtained. The application became abandoned October 29, 2010. A Notice of Abandonment was mailed April 15, 2011.

The petition satisfies the conditions for revival pursuant to 37 CFR 1.137(b) by including (1) a reply in the form a Request for Continued Examination (RCE), RCE fee, and submission under 37 CFR 1.114, (2) a petition fee of $810, and (3) a statement of unintentional delay. The reply to the final Office action is accepted as having been unintentionally delayed.

The file does not indicate a change of address has been submitted, although the address given on the petition differs from the address of record. If appropriate, a change of address should be filed in accordance with MPEP 601.03. A courtesy copy of this decision is being mailed to the address given on the petition; however, the Office will mail all future correspondence solely to the address of record.

Telephone inquires regarding this decision should be directed to Robert DeWitty, Petitions Attorney, Office of Petitions (571-272-8427).

This application is being referred to Technology Center Art Unit 3677 for further consideration of the filed Response.

Ramesh Krishnamurthy

for Anthony Knight
Director
Office of Petitions

cc: Michel Larbrisseau
4030 St. Ambroise #250
Montreal, Quebec H4C 2C7 Canada

UNITED STATES PATENT AND TRADEMARK OFFICE

Commissioner for Patents
United States Patent and Trademark Office
P.O. Box 1450
Alexandria, VA 22313-1450
www.uspto.gov

BUCHANAN, INGERSOLL & ROONEY PC
POST OFFICE BOX 1404
ALEXANDRIA VA 22313-1404

MAILED
AUG 10 2011
OFFICE OF PETITIONS

In re Application of	:	
Lars-Johan LINDQVIST	:	
Application No. 11/918,671	:	DECISION ON PETITION
Filed: October 17, 2007	:	
Attorney Docket No. 1034193-000142	:	

This is a decision on the petition under 37 CFR 1.182, filed April 20, 2011, to change the order of the names of the inventors.

The petition is **GRANTED**.

Office records have been corrected to reflect the change in the order of the named inventors. A corrected Filing Receipt, which sets forth the desired order of the named inventors, accompanies this decision on petition.

As authorized, the $400 fee for the petition under 37 CFR 1.182 has been assessed to petitioner's deposit account.

This application is being referred to the Office of Data Management.

Telephone inquiries regarding this decision should be directed to Michelle R. Eason at (571) 272- 4231.

Thurman K. Page
Petitions Examiner
Office of Petitions

ATTACHMENT: Corrected Filing Receipt

UNITED STATES PATENT AND TRADEMARK OFFICE

UNITED STATES DEPARTMENT OF COMMERCE
United States Patent and Trademark Office
Address: COMMISSIONER FOR PATENTS
P.O. Box 1450
Alexandria, Virginia 22313-1450
www.uspto.gov

APPLICATION NUMBER	FILING or 371(c) DATE	GRP ART UNIT	FIL FEE REC'D	ATTY.DOCKET.NO	TOT CLAIMS	IND CLAIMS
11/918,671	10/17/2007	2835	1360	1034193-000142	4	1

CONFIRMATION NO. 6365

CORRECTED FILING RECEIPT

21839
BUCHANAN, INGERSOLL & ROONEY PC
POST OFFICE BOX 1404
ALEXANDRIA, VA 22313-1404

OC000000048970233

Date Mailed: 07/27/2011

Receipt is acknowledged of this non-provisional patent application. The application will be taken up for examination in due course. Applicant will be notified as to the results of the examination. Any correspondence concerning the application must include the following identification information: the U.S. APPLICATION NUMBER, FILING DATE, NAME OF APPLICANT, and TITLE OF INVENTION. Fees transmitted by check or draft are subject to collection. Please verify the accuracy of the data presented on this receipt. **If an error is noted on this Filing Receipt, please submit a written request for a Filing Receipt Correction. Please provide a copy of this Filing Receipt with the changes noted thereon. If you received a "Notice to File Missing Parts" for this application, please submit any corrections to this Filing Receipt with your reply to the Notice. When the USPTO processes the reply to the Notice, the USPTO will generate another Filing Receipt incorporating the requested corrections**

Applicant(s)

Lars-Johan Lindqvist, Skien, NORWAY;
Ole Graunhag, Skien, NORWAY;
Jan-Henrik Kuhlefelt, Skien, NORWAY;

Assignment For Published Patent Application

ABB Technology AG, Zurich, SWITZERLAND

Power of Attorney: The patent practitioners associated with Customer Number 21839

Domestic Priority data as claimed by applicant

This application is a 371 of PCT/EP2006/003501 04/18/2006

Foreign Applications (You may be eligible to benefit from the **Patent Prosecution Highway** program at the USPTO. Please see http://www.uspto.gov for more information.)
GERMANY 10 2005 017 903.7 04/18/2005

If Required, Foreign Filing License Granted: 11/28/2008

The country code and number of your priority application, to be used for filing abroad under the Paris Convention, is **US 11/918,671**

Projected Publication Date: Not Applicable

Non-Publication Request: No

Early Publication Request: No

Title

FUSE ARRANGEMENT

Preliminary Class

337

PROTECTING YOUR INVENTION OUTSIDE THE UNITED STATES

Since the rights granted by a U.S. patent extend only throughout the territory of the United States and have no effect in a foreign country, an inventor who wishes patent protection in another country must apply for a patent in a specific country or in regional patent offices. Applicants may wish to consider the filing of an international application under the Patent Cooperation Treaty (PCT). An international (PCT) application generally has the same effect as a regular national patent application in each PCT-member country. The PCT process **simplifies** the filing of patent applications on the same invention in member countries, but **does not result** in a grant of "an international patent" and does not eliminate the need of applicants to file additional documents and fees in countries where patent protection is desired.

Almost every country has its own patent law, and a person desiring a patent in a particular country must make an application for patent in that country in accordance with its particular laws. Since the laws of many countries differ in various respects from the patent law of the United States, applicants are advised to seek guidance from specific foreign countries to ensure that patent rights are not lost prematurely.

Applicants also are advised that in the case of inventions made in the United States, the Director of the USPTO must issue a license before applicants can apply for a patent in a foreign country. The filing of a U.S. patent application serves as a request for a foreign filing license. The application's filing receipt contains further information and guidance as to the status of applicant's license for foreign filing.

Applicants may wish to consult the USPTO booklet, "General Information Concerning Patents" (specifically, the section entitled "Treaties and Foreign Patents") for more information on timeframes and deadlines for filing foreign patent applications. The guide is available either by contacting the USPTO Contact Center at 800-786-9199, or it can be viewed on the USPTO website at http://www.uspto.gov/web/offices/pac/doc/general/index.html.

For information on preventing theft of your intellectual property (patents, trademarks and copyrights), you may wish to consult the U.S. Government website, http://www.stopfakes.gov. Part of a Department of Commerce initiative, this website includes self-help "toolkits" giving innovators guidance on how to protect intellectual property in specific countries such as China, Korea and Mexico. For questions regarding patent enforcement issues, applicants may call the U.S. Government hotline at 1-866-999-HALT (1-866-999-4158).

LICENSE FOR FOREIGN FILING UNDER

Title 35, United States Code, Section 184

Title 37, Code of Federal Regulations, 5.11 & 5.15

GRANTED

The applicant has been granted a license under 35 U.S.C. 184, if the phrase "IF REQUIRED, FOREIGN FILING LICENSE GRANTED" followed by a date appears on this form. Such licenses are issued in all applications where the conditions for issuance of a license have been met, regardless of whether or not a license may be required as

set forth in 37 CFR 5.15. The scope and limitations of this license are set forth in 37 CFR 5.15(a) unless an earlier license has been issued under 37 CFR 5.15(b). The license is subject to revocation upon written notification. The date indicated is the effective date of the license, unless an earlier license of similar scope has been granted under 37 CFR 5.13 or 5.14.

This license is to be retained by the licensee and may be used at any time on or after the effective date thereof unless it is revoked. This license is automatically transferred to any related applications(s) filed under 37 CFR 1.53(d). This license is not retroactive.

The grant of a license does not in any way lessen the responsibility of a licensee for the security of the subject matter as imposed by any Government contract or the provisions of existing laws relating to espionage and the national security or the export of technical data. Licensees should apprise themselves of current regulations especially with respect to certain countries, of other agencies, particularly the Office of Defense Trade Controls, Department of State (with respect to Arms, Munitions and Implements of War (22 CFR 121-128)); the Bureau of Industry and Security, Department of Commerce (15 CFR parts 730-774); the Office of Foreign AssetsControl, Department of Treasury (31 CFR Parts 500+) and the Department of Energy.

NOT GRANTED

No license under 35 U.S.C. 184 has been granted at this time, if the phrase "IF REQUIRED, FOREIGN FILING LICENSE GRANTED" DOES NOT appear on this form. Applicant may still petition for a license under 37 CFR 5.12, if a license is desired before the expiration of 6 months from the filing date of the application. If 6 months has lapsed from the filing date of this application and the licensee has not received any indication of a secrecy order under 35 U.S.C. 181, the licensee may foreign file the application pursuant to 37 CFR 5.15(b).

SPE RESPONSE FOR CERTIFICATE OF CORRECTION

Paper No.:20110503

DATE : May 3, 2011

TO SPE OF : ART UNIT 2858

SUBJECT : Request for Certificate of Correction on Patent No.: 7772836

A response is requested with respect to the accompanying request for a certificate of correction.

Please complete this form and return with file, within **7** days to:
Certificates of Correction Branch – ST (South Tower) 9A22
Palm location **7590** - Tel. No. (703) 305-8309

With respect to the change(s) requested, correcting Office and/or Applicant's errors, should the patent read as shown in the certificate of correction? No new matter should be introduced, nor should the scope or meaning of the claims be changed.

Thank You For Your Assistance **Certificates of Correction Branch**

The request for issuing the above-identified correction(s) is hereby:
Note your decision on the appropriate box.

☒ **Approved** **All** changes apply.

☐ **Approved in Part** Specify below which changes **do not** apply.

☐ **Denied** State the reasons for denial below.

Comments:

SPE: Patrick J. Assouad **Art Unit** 2858

UNITED STATES PATENT AND TRADEMARK OFFICE

Commissioner for Patents
United States Patent and Trademark Office
P.O. Box 1450
Alexandria, VA 22313-1450
www.uspto.gov

MAILED

MAY 06 2011

PCT LEGAL ADMINISTRATION

CONTINENTAL TEVES, INC.
ONE CONTINENTAL DRIVE
AUBURN HILLS MI 48326-1581

In re Application of EWALD et al.	:	
Application No.: 11/918,683	:	DECISION ON
PCT No.: PCT/DE06/00303	:	
Int. Filing: 18 February 2006	:	PETITION TO REVIVE
Priority Date: 18 April 2005	:	
Attorney Docket No.: TM053	:	UNDER 37 CFR 1.137(b)
For: METHOD FOR DEFINED CLOSING OF A	:	
WINDOW PANE OF A MOTOR VEHICLE	:	

The petition to revive under 37 CFR 1.137(b) filed 04 March 2011 in the above captioned application is hereby **GRANTED** as follows:

Applicant's statement that "the entire delay in filing the required reply from the due date for the required reply until the filing of a grantable petition under 37 CFR 1.137(b) was unintentional" satisfies the requirement of 37 CFR 1.137(b)(3). The petition fee of $1620 has been paid.

Applicant submitted the declaration (PTO/SB/103) executed by inventors, in compliance with 37 CFR 1.497(a) and (b). The $130 surcharge for filing the declaration after the thirty month period was also paid.

This application is being referred to the National Stage Processing Branch of the Office of PCT Operations for further processing. The 35 U.S.C. 371(c)(1), (c)(2) and (c)(4) date is 04 March 2011.

/Cynthia M. Kratz/
Cynthia M. Kratz
Attorney Advisor
PCT Legal Office
Office of PCT Legal Administration
Telephone: (571) 272-3286

UNITED STATES PATENT AND TRADEMARK OFFICE

Commissioner for Patents
United States Patent and Trademark Office
P.O. Box 1450
Alexandria, VA 22313-1450
www.uspto.gov

MAILED
APR 25 2011
OFFICE OF PETITIONS

Lempia Summerfield Katz LLC
One North LaSalle Street
Suite 3150
CHICAGO IL 60602

In re Patent of Forster et al.	:	DECISION ON REQUEST
Patent No. 7,874,727	:	FOR
Issue Date: January 25, 2011	:	RECONSIDERATION OF
Application No. 11/918,691	:	PATENT TERM ADJUSTMENT
Filed: October 15, 2007	:	and
Attorney Docket No. 11371/256	:	NOTICE OF INTENT TO ISSUE
(2004P20516 WOUS)	:	CERTIFICATE OF CORRECTION

This is a decision on the petition filed on March 25, 2011, which is being treated as a petition under 37 CFR 1.705(d) requesting that the patent term adjustment indicated on the above-identified patent be corrected to indicate that the term of the above-identified patent is extended or adjusted by ninety-seven (97) days.

The petition to correct the patent term adjustment indicated on the above-identified patent to indicate that the term of the above-identified patent is extended or adjusted by ninety-seven (97) days is **DISMISSED**.

The calculation of delay pursuant to 37 CFR 1.702(b) is based on a national stage commencement date of October 22, 2007, not October 20, 2007, as patentees assert. While early processing was requested, early processing requirements were not met. As the expiration of the 30-month period pursuant to 35 U.S.C. 371(b) fell on Saturday, October 20, 2007, the period expired on the subsequent business day, October 22, 2007. *See* PCT Rule 80.5. Accordingly, the commencement date is Monday, October 22, 2007. The over three year period begins on October 23, 2010 and ends on January 25, 2011, the date of issuance of the patent, and is 95 days.

Accordingly, no changes to the patent term adjustment will be made. It remains 95 days -- 0 days of A delay + 95 days of B delay - 0 days of Applicant delay.

Telephone inquiries specific to this matter should be directed to the undersigned at (571) 272-3230.

Shirene Willis Brantley

Shirene Willis Brantley
Senior Petitions Attorney
Office of Petitions

UNITED STATES PATENT AND TRADEMARK OFFICE

COMMISSIONER FOR PATENTS
UNITED STATES PATENT AND TRADEMARK OFFICE
P.O. BOX 1450

The Procter & Gamble Company
Global Legal Department – IP
Sycamore, Bldg.- 4th Floor
299 East Sixth Street
Cincinnati, Ohio 45202

MAILED
FEB 16 2011
OFFICE OF PETITIONS

In re Application of	:	
Dieter BOECKH et al.	:	DECISION GRANTING PETITION
Application No. 11/918,752	:	UNDER 37 CFR 1.137(b)
Filed: 25 February 2009	:	
Atty. Docket No.: 10565*L/SK	:	

This is a decision on the petition under 37 CFR 1.137(b), filed 4 January 2011, to revive the above-identified application ("Application").

The petition is **GRANTED**.

The Application became abandoned for failure to reply in a timely manner to the non-final Office action mailed 28 June 2010 ("outstanding Office action"), which set a shortened statutory reply period of three (3) months. No extension of time under the provisions of 37 CFR 1.136(a) was obtained. The application became abandoned on 29 September 2010, with notification mailed 5 January 2011.

A grantable petition under 37 CFR 1.137(b) must be accompanied by: (1) the reply, unless previously filed; (2) the petition fee as set forth in 37 CFR 1.17(m); (3) a Statement that the entire delay in filing the required reply from the due date for the reply until the filing of a grantable petition pursuant to 37 CFR 1.137(b) was unintentional; and (4) any terminal disclaimer (and fee as set forth in 37 CFR 1.20(d)) required by 37 CFR 1.137(d).

The petition satisfies the conditions for revival pursuant to 37 CFR 1.137(b) by including (1) a reply in the form of a Response to the outstanding Office action, (2) a petition fee of $1620.00, and (3) a Statement of unintentional delay. The reply to the outstanding Office action is accepted as having been unintentionally delayed.

General inquiries relating to this decision should be directed to Robert DeWitty, Petitions Examiner, Office of Petitions (571-272-6051).

The application file will be referred to Technology Center Art Unit 1761 for further action on the filed Response.

David Bucci
Petitions Examiner
Office of Petitions

UNITED STATES PATENT AND TRADEMARK OFFICE

Commissioner for Patents
United States Patent and Trademark Office
P.O. Box 1450
Alexandria, VA 22313-1450
www.uspto.gov

45722
HOWARD IP LAW GROUP
P.O. Box 226
Fort Washington, PA 19034

MAILED

OCT 29 2010

PCT LEGAL ADMINISTRATION

In re Application of
BERLIER *et al*
U.S. Application No.: 11/918,805
PCT No.: PCT/FR2006/050357
Int. Filing Date: 19 April 2006
Priority Date: 19 April 2005
Attorney Docket No.: Beaumont-52
For: LOW PRESSURE CARBONITRIDING METHOD AND DEVICE

DECISION ON RENEWED PETITION UNDER 37 CFR 1.47

This decision is in response to applicants' renewed petition under 37 CFR 1.47(a) filed 01 September 2010.

BACKGROUND

On 01 July 2010, a decision dismissing applicants' petition under 37 CFR 1.47(a) was mailed. Applicants were given two months to respond with extensions of time available under 37 CFR 1.136(a).

On 01 September 2010, applicants filed a renewed petition which was accompanied by, *inter alia*, documentary evidence in support of the petition.

DISCUSSION

Item (2) of 37 CFR 1.47(a) was not satisfied as applicants failed to show that a complete copy of the subject application was presented to Mr. GOLDSTEINAS.

The evidence presented in the prior petition was lacking in that the postal receipt submitted as proof of receipt by the nonsigning inventor of the documents mailed 04 March 2010 was in a foreign language without an accompanying English translation. Further, the undersigned could not determine whether the signature on the postal receipt was the nonsigning inventor.

In the renewed petition, the 37 CFR 1.47(a) applicants submitted a color copy of the postal receipt (attachment 1) and an English translation as requested. The 37 CFR 1.47(a) applicants also explain that the signature on the postal receipt is signed in the area of the postal receipt specifically designated for the signature of the recipient.

A review of this evidence shows that Mr. GOLDSTEINAS did receive the

documents (declaration, a complete copy of the subject application) on 04 March 2010. This fact, along with the evidence previously submitted, is sufficient to show a refusal by conduct. *See* MPEP § 409.03(d)(II).

All items of 37 CFR 1.47(a) are now complete.

CONCLUSION

Applicants' renewed petition under 37 CFR 1.47(a) is hereby **GRANTED**.

Applicants have completed the requirements for acceptance under 35 U.S.C. 371(c). The application has an international filing date of 19 April 2006, under 35 U.S.C. 363, and a 35 U.S.C. 371 date of 22 June 2009.

This application is being forwarded to the National Stage Processing Division of the Office of PCT Operations for continued processing

James Thomson

James Thomson
Attorney Advisor
Office of PCT Legal Administration

Tel.: (571) 272-3302

UNITED STATES PATENT AND TRADEMARK OFFICE

Commissioner for Patents
United States Patent and Trademark Office
P.O. Box 1450
Alexandria, VA 22313-1450
www.uspto.gov

Mr. Aymeric Goldsteinas
38 Route de Grenoble
38120, Saint Egreve
France

MAILED

OCT 29 2010

PCT LEGAL ADMINISTRATION

In re Application of
BERLIER *et al*
U.S. Application No.: 11/918,805
PCT No.: PCT/FR2006/050357
Int. Filing Date: 19 April 2006
Priority Date: 19 April 2005
Attorney Docket No.: Beaumont-52
For: LOW PRESSURE CARBONITRIDING METHOD AND DEVICE

Mr. Goldsteinas:

You are named as an inventor in the above-captioned United States national stage application, filed under the provisions of 37 CFR 1.47(a) and 35 U.S.C. 116. Should a patent be granted, you will be designated as an inventor.

As a named inventor, you are entitled to inspect any paper in the file wrapper of the application, order copies of all or any part thereof (at a prepaid cost per 37 CFR 1.19) or to make your position of record in the application. Alternatively, you may arrange to do any of the preceding through a registered patent agent or attorney presenting written authorization from you. The counsel for the applicant is listed below. Joining in the application would entail the filing of an appropriate oath or declaration by you pursuant to 37 CFR 1.63.

James Thomson
Attorney Advisor
Office of PCT Legal Administration

Tel.: (571) 272-3302

HOWARD IP LAW GROUP
P.O. Box 226
Fort Washington, PA 19034

UNITED STATES PATENT AND TRADEMARK OFFICE

Commissioner for Patents
United States Patent and Trademark Office
P.O. Box 1450
Alexandria, VA 22313-1450
www.uspto.gov

WOLF GREENFIELD & SACKS, P.C.
600 ATLANTIC AVENUE
BOSTON MA 02210-2206

MAILED
APR 16 2012
OFFICE OF PETITIONS

In re Application of	:	
Takatoshi Nakumura, et al.	:	
Application No.: 11/918,834	:	ON PETITION
Filed: October 19, 2007	:	
Attorney Docket No.: S1459.70222US00	:	

This is a decision on the petition, filed April 13, 2012, under 37 CFR 1.313(c)(2) to withdraw the above-identified application from issue after payment of the issue fee.

The petition is **GRANTED**.

The above-identified application is withdrawn from issue for consideration of a submission under 37 CFR 1.114 (request for continued examination). See 37 CFR 1.313(c)(2).

Petitioner is advised that the issue fee paid on March 15, 2012, cannot be refunded. If, however, this application is again allowed, petitioner may request that it be applied towards the issue fee required by the new Notice of Allowance.[1]

Telephone inquiries relating to this decision should be directed to the undersigned at (571) 272-3204.

The application is being referred to Technology Center AU 2617 for further processing of the request for continued examination and for consideration of the concurrently filed Information Disclosure Statement (IDS).

/SDB/

Sherry D. Brinkley
Petitions Examiner
Office of Petitions

[1] *The request to apply the issue fee to the new Notice may be satisfied by completing and returning the new Part B – Fee(s) Transmittal Form (along with any balance due at the time of submission). Petitioner is advised that the Issue Fee Transmittal Form* ***must*** *be completed and timely submitted to avoid abandonment of the application.*

UNITED STATES PATENT AND TRADEMARK OFFICE

Commissioner for Patents
United States Patent and Trademark Office
P.O. Box 1450
Alexandria, VA 22313-1450
www.uspto.gov

KENYON & KENYON LLP
ONE BROADWAY
NEW YORK NY 10004

MAILED

SEP 01 2011

OFFICE OF PETITIONS

In re Application of	:	
Zott et al.	:	
Application No. 11/918,848	:	DECISION ON PETITION
Filed: March 2, 2009	:	
Attorney Docket No. 10191/5037	:	

This is a decision on the petition, filed August 18, 2011, which is being treated as a petition under 37 CFR 1.181 (no fee) requesting withdrawal of the holding of abandonment in the above-identified application.

The petition is **GRANTED**.

This application was held abandoned for failure to reply to the final Office action mailed February 3, 2011, which set a three (3) month shortened statutory period for reply. A Notice of Abandonment was mailed on August 9, 2011.

Petitioner asserts that the Office action dated February 3, 2011 was not received.

A review of the written record indicates no irregularity in the mailing of the Office action, and, in the absence of any irregularity, there is a strong presumption that the Office action was properly mailed to the practitioner at the address of record. This presumption may be overcome by a showing that the Office action was not in fact received.

The showing required to establish nonreceipt of an Office communication must include:

> (1) a statement from the practitioner describing the system used for recording an Office action received at the correspondence address of record with the USPTO. The statement should establish that the docketing system is sufficiently reliable. It is expected that the record would include, but not be limited to, the application number, attorney docket number, the mail date of the Office action and the due date for the response.
>
> (2) Practitioner must state that the Office action was not received at the correspondence address of record, and that a search of the practitioner's record(s), including any file jacket or the equivalent, and the application contents, indicates that the Office action was not received.
>
> (3) A copy of the record(s) used by the practitioner where the non-received Office action would have been entered had it been received is required. A copy of the practitioner's

> record(s) required to show non-receipt of the Office action should include the master docket for the firm. That is, if a three month period for reply was set in the nonreceived Office action, a copy of the master docket report showing all replies docketed for a date three months from the mail date of the nonreceived Office action must be submitted as documentary proof of nonreceipt of the Office action. If no such master docket exists, the practitioner should so state and provide other evidence such as, but not limited to, the following: the application file jacket; incoming mail log; calendar; reminder system; or the individual docket record for the application in question. See MPEP §711.03(c)(I)(A).

The petition satisfies the above-stated requirements. Accordingly, the application was not abandoned in fact.

In view of the above, the Notice of Abandonment is hereby vacated and the holding of abandonment withdrawn.

Petitioner has submitted a Notice of Appeal with the instant petition. **The two-month period for filing an appeal brief under 37 CFR 41.37 (accompanied by the fee required by 37 CFR 41.20(b)(2)), runs from the date of this decision.**

The $1620.00 petition fee and the $1110.00 extension of time fees are both unnecessary and will be credited to petitioner's deposit account as authorized.

This application is being referred to Technology Center AU 3662 to await the filing of an appeal brief or for such other appropriate reply as may be submitted to continue prosecution of the application.

/Liana Walsh/
Liana Walsh
Petitions Examiner
Office of Petitions

Under the Paperwork Reduction Act of 1995, no persons are required to respond to a collection of information unless it displays a valid OMB control number.

REQUEST FOR PARTICIPATION IN THE PATENT COOPERATION TREATY - PATENT PROSECUTION HIGHWAY (PCT-PPH) PILOT PROGRAM BETWEEN THE EUROPEAN PATENT OFFICE (EPO) AND THE USPTO

Application No.	11/918,949	Filing date:	April 9, 2008
First Named Inventor:	Ralf Georg Christel		
Title of the invention:	PRINTING GROUPS COMPRISING AT LEAST TWO COOPERATING CYLINDERS AND RADIALY MO		

THIS REQUEST FOR PARTICIPATION IN THE PCT-PPH PILOT PROGRAM ALONG WITH THE REQUIRED DOCUMENTS MUST BE SUBMITTED VIA EFS-WEB. INFORMATION REGARDING EFS-WEB IS AVAILABLE AT HTTP://WWW.USPTO.GOV/EBC/EFS_HELP.HTML

APPLICANT HEREBY REQUESTS PARTICIPATION IN THE PCT-PPH PROGRAM AND PETITIONS TO MAKE THE ABOVE-IDENTIFIED APPLICATION SPECIAL UNDER THE PCT-PPH PROGRAM.

The above-identified application is (1) a national stage entry of the corresponding PCT application, or (2) a national stage entry of another PCT application which claims priority to the corresponding PCT application, or (3) a national application that claims domestic/ foreign priority to the corresponding PCT application, or (4) a national application which forms the basis for the priority claim in the corresponding PCT application, or (5) a continuing application of a U.S. application that satisfies one of (1) to (4) above, or (6) a U.S. application that claims domestic benefit to a U.S. provisional application which forms the basis for the priority claim in the corresponding PCT application.

The corresponding PCT application number(s) is/are: PCT/EP2006/061695

The international date of the corresponding PCT application(s) is/are: April 20, 2006

I. List of Required Documents:

a. **A copy of the latest international work product (WO/ISA, WO/IPEA, or IPER) in the above-identified corresponding PCT application(s)**

- [ ] is attached
- [x] is not attached because the document is already in the U.S. application.

b. **A copy of all claims which were indicated as having novelty, inventive step and industrial applicability in the above-identified corresponding PCT application(s).**

- [ ] is attached.
- [x] is not attached because the document is already in the U.S. application.

c. **English translations of the documents in a. and b. above are attached (if the documents are not in the English language). A statement that the English translation is accurate is attached for the document in b. above.**

This collection of information is required by 35 U.S.C. 119, 37 CFR 1.55, and 37 CFR 1.102(b). The information is required to obtain or retain a benefit by the public, which is to file (and by the USPTO to process) an application. Confidentiality is governed by 35 U.S.C. 122 and 37 CFR 1.11 and 1.14. This collection is estimated to take 2 hours to complete, including gathering, preparing, and submitting the completed application form to the USPTO. Time will vary depending upon the individual case. Any comments on the amount of time you require to complete this form and/or suggestions for reducing this burden should be sent to the Chief Information Officer, U.S. Patent and Trademark Office, U.S. Department of Commerce, P.O. Box 1450, Alexandria, VA 22313-1450. DO NOT SEND FEES OR COMPLETED FORMS TO THIS ADDRESS.

Under the Paperwork Reduction Act of 1995, no persons are required to respond to a collection of information unless it displays a valid OMB control number.

REQUEST FOR PARTICIPATION IN THE PCT-PPH PILOT PROGRAM BETWEEN THE EPO AND THE USPTO

(continued)

Application No.:	11/918,949
First Named Inventor:	Ralf Georg Christel

d. (1) An information disclosure statement listing the documents cited in the international work products (ISR, WO/ISA, WO/IPEA, IPER) of the corresponding PCT application.

☐ Is attached

☑ Has already been filed in the above-identified U.S. application on October 22, 2007

(2) Copies of all documents (except) for U.S. patents or U.S. patent application publications)

☐ Are attached.

☑ Have already been filed in the above-identified U.S. application on October 22, 2007

II. Claims Correspondence Table:

Claims in US Application	Patentable Claims in the corresponding PCT Application	Explanation regarding the correspondence
113 - 116	1 - 4	direct correspondence
117	5	U.S. claims amended to remove multiple dependencies
		from PCT claims
118	6	direct correspondence
119	7	U.S. claims amended to remove multiple dependencies
		from PCT claims
120 - 122	8 - 10	direct correspondence
123-133	11 - 21	U.S. claims amended to remove multiple dependencies
		from PCT claims
134	22	direct correspondence
135 - 137	23 - 25	U.S. claims amended to remove multiple dependencies
		from PCT claims
138 - 140	26 - 28	direct correspondence
141 - 49	29 - 37	U.S. claims amended to remove multiple dependencies
		from PCT claims
150	38	direct correspondence
151 - 159	39 - 47	U.S. claims amended to remove multiple dependencies
		from PCT claims
160	48	direct correspondence

Under the Paperwork Reduction Act of 1995, no persons are required to respond to a collection of information unless it displays a valid OMB control number.

REQUEST FOR PARTICIPATION IN THE PCT-PPH PILOT PROGRAM BETWEEN THE EPO AND THE USPTO

(continued)

Application No.:	11/916,949
First Named Inventor:	Ralf Georg Christel

d. **(1) An information disclosure statement listing the documents cited in the international work products (ISR, WO/ISA, WO/IPEA, IPER) of the corresponding PCT application.**

☐ Is attached

☑ Has already been filed in the above-identified U.S. application on October 22, 2007

(2) Copies of all documents (except) for U.S. patents or U.S. patent application publications)

☐ Are attached

☑ Have already been filed in the above-identified U.S. application on October 22, 2007

II. Claims Correspondence Table:

Claims in US Application	Patentable Claims in the corresponding PCT Application	Explanation regarding the correspondence
161 - 163	49 - 51	U.S. claims amended to remove multiple dependencies
		from PCT claims
164 - 166	52 - 54	direct correspondence
167, 168	55, 56	U.S. claims amended to remove multiple dependencies
		from PCT claims

III. All the claims in the US application sufficiently correspond to the patentable claims in the corresponding PCT application.

Signature	Date September 30, 2010
Name (Print/Typed) Douglas R. Hanscom	Registration Number 26600

KARIN T. DUNN

GERMAN TRANSLATION AND LANGUAGE SERVICES
Certified by the American Translators Association

4706 OLDE FORGE CT., FAIRFAX, VA 22032
TELEPHONE, FAX: 703-426-1422 · DUNNSFAM@MSN.COM

Date: September 29th, 2010

DECLARATION

The undersigned, Karin T. Dunn, hereby states that she is well acquainted with both the English and German languages and that the attached is a true translation to the best of her knowledge and ability of the German text of the amended claims, submitted with the International Preliminary Report on Patentability, for PCT/EP2006/061695, which was filed on 20 April 2006 and was published on 26 October 2006 as WO 2006/111556 A2.

The undersigned declares that the above statement is true and that this statement was made with the knowledge that willful false statements and the like so made are punishable by fine or imprisonment, or both, under Section 1001 of Title 18 of the United States Code and that such willful false statements may jeopardize the validity of the application or document or any patent resulting therefrom.

Karin T. Dunn

Karin T. Dunn

Translation of the pertinent portions of a Notification of the Transmittal of the International Preliminary Report Regarding Patentability in accordance with Rule 71.1 PCT, mailed 08/31/2007

2. This report comprises a total of 12 pages including this cover sheet.

3. Enclosures are also included with the report; these include

   A total of 16 pages *(sent to the applicant and to the International Authority)*, which include

   Pages containing the description, claims and/or drawings that have been amended and upon which this report is based, and/or pages containing corrections approved by the authority (see Rule 70.16 and Section 607 of the Administrative Guidelines).

4. This report contains information on the following items:

Box I	Basis of the Report
Box III	No preparation of an expert opinion with regard to novelty, inventive step and industrial applicability
Box IV	Lack of unity of the invention
Box V	Reasoned statement according to Article 35(2) with regard to novelty, inventive step and industrial applicability; citations and explanations to support such statement
Box VII	Certain defects of the international application
Box VIII	Certain remarks on the international application

Box I **Basis of the Report**

1. With regard to **language**, the opinion has been established on the basis of:

   the international application in the language in which it was filed.

2. With regard to the **components** of the international application the report is based upon

   Description, pages

1-3, 5-136	published version
4, 4a	received on 03/17/2007 with the letter dated 03/12/2007

   Claims, No.

1-56	Received on 03/17/2007 with the letter dated 03/12/2007

   Drawings, pages

1/48-48/48	published version

2. Due to the changes, the following documents no longer apply:

   Claims: No. 57

Box III No preparation of an expert opinion with regard to novelty, inventive step and industrial applicability

1. The following portions of the application were not examined in terms of whether the claimed invention is to be viewed as novel, based upon inventive step (not obvious) and industrially applicable:

   Claims 2, 4

   The description, claims or drawings *(please provide precise details below)* or the aforementioned claims No. 4 are so unclear that no logical expert opinion could be prepared *(precise details)*:

   See attached sheet

   For the aforementioned Claims No. 2, no International Search Report has been prepared.

Box IV Lack of Unity of the Invention

1. In response to the invitation to restrict the claims or to pay additional fees, the applicant has paid the additional fees within the stated deadline.

3. The Authority is of the opinion that the requirement with regard to unity of the invention according to Rules 13.1, 13.2 and 13.3 has not been fulfilled for the following reasons:

See attached sheet

2. Therefore, the report has been prepared for the following portions of the international application:

   Those portions that relate to the claims having the following numbers: 1, 3-56

Box V. Reasoned statement according to Article 35(2) with regard to novelty, inventive step and industrial applicability; citations and explanations to support such statement

1. Statement

Novelty (N)	Yes:	Claims 1, 3, 5-56
	No:	Claims
Inventive Step (IS)	Yes:	Claims 1, 3, 5-56
	No:	Claims
Industrial Applicability (IA)	Yes:	Claims 1, 3, 5-56
	No:	Claims

2. Citations and Explanations (Rule 70.7):
See supplementary pages

Box VII Certain defects in the International Application

It has been determined that the international application has the following defects in terms of form or content:

See attached sheet

Box VIII Certain remarks on the International Application

For the clarity of the patent claims, the description and the drawings, or with regard to the question of whether the claims are fully supported by the description, the following is noted:

See attached sheet

INTERNATIONAL PRELIMINARY REPORT REGARDING PATENTABILITY (SUPPLEMENTARY PAGES)

Re Item III
No preparation of an expert opinion with regard to novelty, inventive step and industrial applicability

Clarity/Fourth Invention:

1. The application does not fulfill the requirements set forth in Article 6 PCT, because Claim 4, and Claim 25, which is dependent upon Claim 4 if it refers back to it, are not clear.

2. From the original version of the independent Claim 4, see the characterizing portion, and the associated description, it is assumed that the following characterizing feature is essential to the definition of the invention:

   "… at least one of the cylinders … is mounted … at each of its ends in a radially displaceable bearing unit…"

   Because independent Claim 4 does not contain this characterizing feature, it does not correspond to the requirement of Article 6 PCT in connection with Rule 6.3b) PCT, that each independent claim must contain all technical characterizing features that are essential to the definition of the invention.

3. The expression used in Claim 4:
   "…wherein the respective directions of action of the forces … that act on the same end of the cylinder … are oriented **neither parallel nor antiparallel to one another**…"

   is vague and unclear and leaves the reader uncertain as to the meaning of the relevant technical characterizing features. The result is that the definition of the object of this Claim 4 is unclear (Article 6 PCT).

4. The characterizing feature claimed in the dependent Claim 25 if it refers back to Claim 4 does not fall under the present independent Claim 4. This contradiction between Claims 4 and 25 leads to doubts with respect to the object of the application for protection, therefore Claims 4 and 25 are not clear (Article 6 PCT).

5. Novelty / inventive step:

5.1. In view of the aforementioned objections, a complete examination of the fourth invention with respect to the requirements of Article 33 PCT regarding novelty and inventive step could not be performed.

5.2. In agreement with the applicant, the Document D2 (= WO-A-02/081218), which describes a printing group having the characterizing features in the preamble to the independent Claim 4, is viewed as the closest prior art. A combination with the teaching of Document D4 (= EP-A-0 331 870) would not place an inventive step as defined by Article 33(3) PCT in question.

Re Box IV
Lack of Unity of the invention

1. This Authority has determined that the international application contains multiple applications that are not connected by a single, general inventive idea (Rule 13.1 PCT), namely:

   1. Claims 1, 5, 11 through 17, 20, 23, 25, 29 through 40, 42 through 50 and 55:
      Fluid-actuatable radial displacement of cylinders with radial bearings

   2. Claims 2, 5, 11 through 20 and 23 through 56:
      Shared control of the adjustment of printing cylinders with radial bearings

   3. Claims 3, 6 through 10, 14, 16, 18, 19, 21 through 23, 25 and 29 through 56:
      Actuator with characteristic identifier

   4. Claims 4, 5, 7 through 10, 14 through 18, 20 through 23, 25 and 29 through 56:
      Independent adjustment of both cylinder ends

2. For the following reasons, these four inventions are not connected to one another such that they realize a single, common inventive idea, Rule 13.1 PCT:

   2.1 Document D1 (= DE-A-102 44 043) describes a printing group with at least two coordinating cylinders, wherein each of the cylinders is mounted in a bearing unit that is capable of radially displacing the respective cylinder, wherein at least one bearing unit has at least one actuator, and wherein a control unit controls or regulates this at least one actuator. Therefore, all characterizing features that are common to all the present independent Claims 1 through 4 are already known to one of ordinary skill in the art from Document D1.

   2.2 A printing group having specific, fluid-actuatable actuators for ink forme and dampening forme rollers together with the specific linear bearing arrangement according to the essential characterizing feature of the first invention according to Claim 1 does not necessarily have a specific control of the actuators of support bearings according to the essential characterizing feature of the second invention according to Claim 2, or necessarily an identifying feature of a displaceable bearing unit according to the essential characterizing feature of the third invention according to Claim 3, or

necessarily an independent adjustment control of the two axial cylinder ends according to the essential characterizing feature of the fourth invention according to Claim 4, or vice versa.

A printing group having a specific control of the actuators of support bearings according to the essential characterizing feature of the second invention according to Claim 2 also does not necessarily have a characteristic identifier of a displaceable bearing unit according to the essential characterizing feature of the third invention according to Claim 3, or necessarily an independent displacement control of the two axial cylinder ends according to the essential characterizing feature of the fourth invention according to Claim 4, or vice versa.

Furthermore, a printing group having a characteristic identifier of a displaceable bearing unit according to the essential characterizing feature of the third invention according to Claim 3 does not necessarily have an independent displacement control of the two axial cylinder ends according to the essential characterizing feature of the fourth invention according to Claim 4, or vice versa.

2.3 Contrary to the stipulations of Rule 13.1 and 13.2 PCT, here there is no connection in the form of a technical interaction among the present four inventions that is expressed in all independent Claims 1 through 4 in the same or corresponding special technical characterizing features.

Re Item V.

Reasoned statement according to Article 35(2) with regard to novelty, inventive step and industrial applicability; citations and explanations to support such statement

1. **First Invention,** Claims 1, 5, 11 through 17, 20, 23, 25, 29 through 40, 42 through 50 and 55:

1.1 Claim 1:

1.1.1. Prior Art:

WO-A-02/081218, cited in the description, describes a printing group having all the characterizing features in the preamble to independent Claim 1.

1.1.2. Object:

Provision of printing groups that can be easily adjusted using a control unit.

1.1.3. Solution:

The specific combination of all characterizing features in Claim 1, especially the forme cylinder, the radially displaceable support bearings of ink forme and dampening forme rollers, together with actuators and their control by means of a control unit according to the features in the characterizing portion of Claim 1, is neither described nor suggested in the prior art documents, therefore an inventive step as defined by Article 33(3) PCT is present.

1.2 Dependent Claims 5, 11 through 17, 20, 23, 25, 29 through 40, 42 through 50 and 55:

All of these dependent claims, if they refer back to Claim 1, define advantageous embodiments of a printing group having all the characterizing features of the present Claim 1.

2. **Third Invention,** Claims 3, 6 through 10, 14, 16, 18, 19, 21 through 23, 25 and 29 through 56:

2.1. Claim 3:

2.1.1. Prior Art:

WO-A-02/081218, cited in the description, describes a printing group having the characterizing features in the preamble to Claim 3.

2.1.2. Object:

Provision of printing groups that can be easily adjusted using a control unit.

2.1.3. Solution:

The specific combination of all characterizing features in Claim 3, especially the forme cylinder, the control unit, and the at least one actuator of the respective bearing unit, which has a characteristic identifier according to the characterizing portion of Claim 3, is neither described nor suggested in the prior art documents, therefore an inventive step as defined by Article 33(3) PCT exists.

2.2 Dependent Claims 6 through 10, 14, 16, 18, 19, 21 through 23, 25, and 29 through 56:

All of these dependent claims, if they refer back to Claim 3, define advantageous embodiments of a printing group having all the characterizing features of the present Claim 3.

Re Point VII
Certain defects in the international application

Description:

The description is not in agreement with the Claims, as stipulated in Rule 5.1 a) iii) PCT.

Re Box VIII
Certain remarks on the international application

Clarity:

1. The application does not fulfill the requirements set forth in Article 6 PCT, because Claims 1, 3, 6, 20 and 25 are unclear.

2. Claims 1 and 20:

   The characterizing feature defined in the dependent Claim 20, viewed as a whole, is vague and unclear, and leaves the reader uncertain as to the meaning of the relevant technical characterizing feature, because it is redundant to the present Claim 1 in its repetition of a characterizing feature already claimed in Claim 1. The result is that the definition of the object of these Claims 1 and 20 is unclear (Article 6 PCT).

3. Claims 1, 3 and 25:

   The characterizing feature claimed in the independent Claim 25 does not fall under the superordinate, independent Clams 1 and 3. This contradiction between the independent Claims 1 and 3 on one hand and the dependent Claim 25 on the other raises doubts with regard to the object of the application for protection, therefore Claims 1, 3 and 25 are unclear (Article 6 PCT).

4. Claims 3 and 6:

   The expression used in dependent Claim 6:
   "…characteristic identifier **q**…"
   is vague and unclear in relation to the characterizing feature defined in the independent Claim 3:
   "…characteristic identifier **p**…"
   and leaves the reader uncertain as to the meaning of the relevant technical characterizing features. It is therefore unclear to one of ordinary skill in the art whether two different characterizing features or a single characterizing feature is being claimed with the present expressions. The result is that the definition of the object of these Claims 3 and 6 is unclear (Article 6 PCT).

Claims

1. A printing couple (04) with at least two cooperating cylinders (06; 07; 312), wherein at least one of the cylinders (06; 07; 312) is configured as a transfer cylinder (06), wherein each of the cylinders (06; 07; 312) is mounted in a bearing unit (14) that is capable of displacing the respective cylinder (06; 07; 312) radially, wherein at least one bearing unit (14) has at least one actuator (82; 84), wherein the respective bearing unit (14) of the cylinder (06; 07; 312) has a linear bearing (70) that is guided by linear elements (72; 73), wherein in the respective linear bearing (70) a journal (63; 64) that is configured on one of the cylinders (06; 07; 312) is rotatably mounted, wherein the linear elements (72; 73) of the respective linear bearing (70) form an angle (β) measuring a maximum of 15° with a line or plane of connection (E) extending through the respective rotational centers of the cylinders (06; 07; 312), wherein the at least one actuator (82; 84) of the bearing unit (14) displaces the respective linear bearing (70) along the linear elements (72; 73) in a direction of adjustment (S) that is oriented toward the print substrate (02), wherein the respective bearing unit (14) is attached to an interior side of a frame wall (11; 12) of the printing couple (04), which side is turned to face the respective cylinder (06; 07; 312), wherein an inking unit (08; 302) with at least one ink forme roller (28; 306; 307) is provided, wherein the forme cylinder (07; 312) and an ink forme roller (28; 306; 307) of the inking unit (08; 302) can be engaged against one another, and/or wherein a dampening unit (09; 303) having at least one dampening roller (41; 304) is provided, wherein the forme cylinder (07; 312) and a dampening roller (41; 304) of the dampening unit (09; 303) can be engaged against one another, characterized in that the cylinder (06; 07; 312) that cooperates with the transfer cylinder (06) is configured as a forme cylinder (07; 312), wherein the at least one ink forme roller (28 ;306; 307) of the inking unit (08; 302) and/or the at least one dampening roller (41; 304) of the dampening unit

(09; 303) are mounted at each end in a respective support bearing (321) that is capable of displacing the respective ink forme roller (28; 306; 307) or the respective dampening roller (41; 304) radially, wherein the support bearings (321) of the ink forme roller (28; 306; 307) or the dampening roller (41; 304) each have at least one actuator (322), wherein the respective at least one actuator (322) of the support bearing (321) of the at least one ink forme roller (28; 306; 307) or the at least one dampening roller (41; 304) is configured as a pneumatic actuator (322), wherein a control unit controls or regulates the at least one actuator (82; 84) of the bearing unit (14) of the cylinder (06; 07; 312), wherein the at least one actuator (82; 84) of the bearing unit (14) of the cylinder (06; 07; 312) is configured as a hydraulic actuator (82; 84), wherein the respective at least one actuator (322) of the support bearing (321) and the at least one actuator (82; 84) of the bearing units (14) are each remotely actuable, wherein the same control device controls or regulates the respective at least one actuator (322) of the support bearing (321) and the respective at least one actuator (82; 84) of the bearing units (14).

2. The printing couple (04) with at least two cooperating cylinders (06; 07; 312), wherein the cylinders (06; 07; 312) are each mounted in a bearing unit (14) that is capable of displacing the respective cylinder (06; 07; 312) radially, wherein at least one bearing unit (14) has at least one actuator (82; 84), wherein a control unit controls or regulates this at least one actuator (82; 84), characterized in that an inking unit (08; 302) with at least one ink forme roller (28; 306; 307) is provided, wherein at least one of the cylinders (06; 07; 312) and one ink forme roller (28; 306; 307) of the inking unit (08; 302) can be engaged against one another, and/or wherein a dampening unit (09; 303) having at least one dampening roller (41; 304) is provided, wherein at least one of the cylinders (06; 07; 312) and one dampening roller (41; 304) of the dampening unit (09; 303) can be engaged against one another, wherein the at least one ink forme roller (28; 306; 307) of the inking unit (08; 302) and/or each end of the at least one dampening roller (41; 304) of the

dampening unit (09; 303) is mounted in a respective support bearing (321) which is capable of displacing the respective ink forme roller (28; 306; 307) or the respective dampening roller (41; 304) radially, wherein the support bearings (321) of the ink forme rollers (28; 306; 307) or the dampening rollers (41; 304) each have at least one actuator (322), wherein either the control unit that controls or regulates the at least one actuator (82; 84) of the bearing unit (14) of the cylinder (06; 07; 312) also controls or regulates the at least one actuator (322) of the respective support bearing (321) of the ink forme roller (28; 306; 307) and/or the dampening roller (41; 304), or wherein a further control unit that is separate from the control unit that controls or regulates the at least one actuator (82; 84) of the bearing unit (14) of the cylinder (06; 07; 312) controls or regulates the at least one actuator (322) of the respective support bearing (321) of the ink forme roller (28; 306; 307) and/or the dampening roller (41; 304).

3. The printing couple (04) with at least two cooperating cylinders (06; 07; 312), wherein at least one of the cylinders (06; 07; 312) is configured as a transfer cylinder (06), wherein each of the cylinders (06; 07; 312) is mounted in a bearing unit (14) that is capable of displacing the respective cylinder (06; 07; 312) radially, wherein at least one bearing unit (14) has at least one actuator (82; 84), characterized in that the cylinder (06; 07; 312) that cooperates with the transfer cylinder (06) is configured as a forme cylinder (07; 312), wherein a control unit controls or regulates the at least one actuator (82; 84) of the bearing unit (14) of the cylinder (06; 07; 312), wherein the at least one actuator (82; 84) of the respective bearing unit (14) has a characteristic identifier p, wherein each bearing unit (14) that has at least one actuator (82; 84) is assigned a controllable device, wherein each of these controllable devices can be selected by the control unit using the

characteristic identifier p, wherein the control unit controls or regulates the at least one actuator (82; 84) of the bearing unit (14) of one of the cylinders (06; 07; 312), separately and independently from the at least one actuator (82; 84) of another bearing unit (14) of the cylinder (06; 07; 312).

4. The printing couple (04) with at least two cooperating cylinders (06; 07; 312), wherein at least one of the cylinders (06; 07; 312) is configured as a transfer cylinder (06), wherein each of the cylinders (06; 07; 312) is mounted in a bearing unit (14) that is capable of displacing the respective cylinder (06; 07; 312) radially, wherein to displace the bearing units (14), actuators (82; 84) that apply a force (F) with a defined direction of action are provided, characterized in that the cylinder (06; 07; 312) that cooperates with the transfer cylinder (06) is configured as a forme cylinder (07; 312), wherein a control unit controls or regulates the adjustment of the actuators (82; 84) necessary for displacement of the respective cylinder (06; 07; 312), wherein at least two actuators (82; 84) that act upon the same end of at least one of the cylinders (06; 07; 312) are provided, wherein the respective directions of action of the forces (F) applied by actuators (82; 84) upon the same end of the cylinder are oriented toward one another neither parallel nor antiparallel, wherein the at least two actuators (82; 84) that act upon the same cylinder end in different directions are arranged in the bearing unit (14), wherein the control unit controls or regulates at least one of the actuators (82; 84) that act upon one end of the cylinder (06; 07; 312) to be displaced, separately and independently of one of the actuators (82; 84) that act upon the other end of the same cylinder (06; 07; 312).

5. The printing couple (04) according to claim 1, 2 or 4, characterized in that the at least one actuator (82; 84) of the respective bearing unit (14) of the at least two cooperating cylinders (06; 07; 312) has a characteristic identifier q, wherein a controllable device that is allocated to one of the bearing units (14) can be selected by a control unit in each case

using the characteristic identifier q.

6. The printing couple (04) according to claim 3, characterized in that a characteristic identifier q that can be selected by the control unit is assigned to each actuator (82; 84) that belongs to one of the bearing units (14).

7. The printing couple (04) according to claim 3 or 4, characterized in that an inking unit (08; 302) with at least one ink forme roller (28; 306; 307) is provided, wherein at least one of the cylinders (06; 07; 312) and one ink forme roller (28; 306; 307) of the inking unit (08; 302) can be engaged against one another, and/or wherein a dampening unit (09; 303) with at least one dampening roller (41; 304) is provided, wherein at least one of the cylinders (06; 07; 312) and one dampening roller (41; 304) of the dampening unit (09; 303) can be engaged against one another.

8. The printing couple (04) according to claim 7, characterized in that the at least one ink forme roller (28; 306; 307) of the inking unit (08; 302) and/or the at least one dampening roller (41; 304) of the dampening unit (09; 303) are mounted at each of their ends in a support bearing (321) that is capable of displacing the respective ink forme roller (28; 306; 307) or the respective dampening roller (41; 304) radially.

9. The printing couple (04) according to claim 8, characterized in that the support bearings (321) of the ink forme roller (28; 306; 307) or the dampening roller (41; 304) each have at least one actuator (322).

10. The printing couple (04) according to claim 9, characterized in that the control unit that controls or regulates the at least one actuator (82; 84) of the bearing unit (14) of the cylinder (06; 07; 312) also controls or regulates the at least one actuator (322) of the

respective support bearing (321) of the ink forme roller (28; 306; 307) or the dampening roller (41; 304).

11. The printing couple (04) according to claim 1, 2 or 7, characterized in that the ink forme roller (28; 306; 307) of the inking unit (08; 302) has the circumference of the cylinder (06; 07; 312) against which said ink forme roller (28; 306; 307) can be engaged.

12. The printing couple (04) according to claim 1, 2 or 9, characterized in that the control unit selectively controls or regulates the at least one actuator (82; 84) for displacing one of the cylinders (06; 07; 312) or the at least one actuator (322) for displacing the at least one ink forme roller (28; 306; 307) or the at least one dampening roller (41; 304).

13. The printing couple (04) according to claim 1 or 2, characterized in that the control unit controls or regulates the at least one actuator (82; 84) of the bearing unit (14) of one of the cylinders (06; 07; 312), separately and independently of the at least one actuator (82; 84) of another bearing unit (14) of the cylinders (06; 07; 312).

14. The printing couple (04) according to claim 1, 2, 3 or 4, characterized in that the inking unit (08; 302) and/or the dampening unit (09; 303) has a plurality of rollers (304; 306; 307; 308; 309; 311), each of which is mounted at its ends in a support bearing (321).

15. The printing couple (04) according to claim 1, 2, 4 or 9, characterized in that the control unit controls or regulates the at least one actuator (322) of one of the support bearings (321) of the at least one ink forme roller (28; 306; 307) or the at least one dampening roller (41; 304), separately and independently of the at least one actuator (322) of the

respective other support bearing (321) of the ink forme roller (28; 306; 307) or the dampening roller (41; 304).

16. The printing couple (04) according to claim 14 or 15, characterized in that the control unit controls or regulates the at least one actuator (322) of one of the support bearings (321) of the at least one ink forme roller (28; 306; 307) or the at least one dampening roller (41; 304), separately and independently of the at least one actuator (322) of a support bearing (321) of at least one of the other rollers (304; 306; 307; 308; 309; 311).

17. The printing couple (04) according to claim 1, 2, 4 or 9, characterized in that in each case the at least one actuator (82; 84) of the bearing unit (14) of the cylinder (06; 07; 312) or the at least one actuator (322) of the support bearing (321) of the at least one ink forme roller (28; 306; 307), or the at least one dampening roller (41; 304) is a component of a fastening device that fixes the respective cylinder (06; 07; 312) in its adjusted position, or the respective ink forme roller (28; 306; 307) or the respective dampening roller (41; 304) in its respectively adjusted position.

18. The printing couple (04) according to claim 2, 3 or 4, characterized in that the at least one actuator (82; 84) of the bearing unit (14) of the cylinder (06; 07; 312) is configured as a hydraulic actuator (82; 84).

19. The printing couple (04) according to claim 2, 3 or 9, characterized in that the at least one actuator (322) of the support bearing (321) of the at least one ink forme roller (28; 306; 307) or the at least one dampening roller (41; 304) is configured as a pneumatic actuator (322).

20. The printing couple (04) according to claim 1, 2 or 4, characterized in that each bearing

unit (14) of a displaceable cylinder (06; 07; 312) is assigned a controllable device.

21. The printing couple (04) according to claim 3 or 20, characterized in that each of the controllable devices pressurizes a plurality of actuators (82; 84) of the same bearing unit (14) synchronously with a first pressure level (42) in a first operating position and with a second pressure level (42) in a second operating position.

22. The printing couple (04) according to claim 21, characterized in that in both operating positions the pressure level (42) that is present at the actuators (82; 84) is different from zero for at least one of the actuators (82; 84) in the same bearing unit (14).

23. The printing couple (04) according to claim 1, 2, 3 or 4, characterized in that the cylinders (06; 07; 312) are each actuated independently of one another by means of a drive (121).

24. The printing couple (04) according to claim 2, characterized in that at least one of the cylinders (06; 07; 312) is configured as a forme cylinder (07; 312) or as a transfer cylinder (06).

25. The printing couple (04) according to claim 1, 2, 3 or 4, characterized in that at least one of the cylinders (06; 07; 312) is configured as an impression cylinder that cooperates with a transfer cylinder (06).

26. The printing couple (04) according to claim 24, characterized in that the transfer cylinder (06) is configured to be double sized.

27. The printing couple (04) according to claim 26, characterized in that the double-sized transfer cylinder (06) has two or three printing blankets side by side in an axial direction.

28. The printing couple (04) according to claim 24, characterized in that the forme cylinder (07) is loaded with four or six printing formes side by side in its axial direction.

29. The printing couple (04) according to claim 1, 2 or 7, characterized in that the ink forme roller (28; 306; 307) of the inking unit (08; 302) and/or the dampening roller (41; 304) of the dampening unit (09; 303) are each driven independently of the cylinder (06; 07; 312) by means of a drive (128).

30. The printing couple (04) according to claim 1, 2 or 7, characterized in that the ink forme roller (28; 306; 307) of the inking unit (08; 302) and/or the dampening roller (41; 304) of the dampening unit (09; 303) are each driven separately by means of a drive (128).

31. The printing couple (04) according to claim 1, 2, 3, 4 or 7, characterized in that at least one of the cylinders (06; 07; 312) and/or one of the rollers (304; 306; 307; 308; 309; 311) of the inking unit (08; 302) and/or the dampening unit (09; 303) has a flexible surface.

32. The printing couple (04) according to claim 1, 2, 3 or 4, characterized in that at least one sensor for detecting a surface pressure between the cylinder (06; 07; 312) to be displaced and the cylinder (06; 07; 312) that cooperates with said cylinder.

33. The printing couple (04) according to claim 1, 2, 3 or 4, characterized in that the control

unit monitors the at least one actuator (82; 84) of the at least one cylinder (06; 07; 312) to be displaced, in order to set a surface pressure between said cylinder (06; 07; 312) and the cylinder (06; 07; 312) that cooperates with it, said surface pressure remaining constant during operation of the printing couple (04), by determining an actual value for this surface pressure, and in the event of a deviation of the determined actual value from a target value stored in the control unit, returns the at least one actuator (82; 84) in its setting.

34. The printing couple (04) according to Claim 1, 2, 3 or 4, characterized in that the control unit adjusts the at least one actuator (82; 84) of the at least one cylinder (06; 07; 312) to be displaced or the at least one actuator (82; 84) of the two cooperating cylinders (06; 07; 312) to be displaced, in each case at least based upon the diameter and/or a surface speed or a rotational speed of the cylinder (06; 07; 312) to be displaced or of the cylinder (06; 07; 312) that cooperates with said cylinder.

35. The printing couple (04) according to claim 1, 2, 3 or 4, characterized in that the control unit adjusts the at least one actuator (82; 84) of the at least one cylinder (06; 07; 312) to be displaced or the at least one actuator (82; 84) of the two cooperating cylinders (06; 07; 312) to be displaced, in each case based at least upon an inclined positioning of the cylinder to be displaced (06; 07; 312) relative to the cylinder (06; 07; 312) that cooperates with said cylinder.

36. The printing couple (04) according to claim 1, 2, 3 or 4, characterized in that, in the control unit, various setting levels for setting the at least one actuator (82; 84) of the at least one cylinder (06; 07; 312) to be displaced, or for the at least one actuator (82; 84) of

the two cooperating cylinders (06; 07; 312) to be displaced, are stored, wherein each of these setting levels can be selected at least based upon a respective surface property of the cooperating cylinders (06; 07; 312).

37. The printing couple (04) according to claim 1, 2, 3 or 4, characterized in that, in the control unit, various setting levels for setting the at least one actuator (82; 84) of the at least one cylinder (06; 07; 312) to be displaced, or for the at least one actuator (82; 84) of the two cooperating cylinders (06; 07; 312) to be displaced, are stored, wherein each of these setting levels can be selected in each case based at least upon a property of a printing substrate (02) imprinted in the printing couple (04).

38. The printing couple (04) according to claim 37, characterized in that the property of the printed substrate (02) relates to its thickness and/or width and/or guidance along the cylinder (06; 07; 312).

39. The printing couple (04) according to claim 1, 2, 3 or 4, characterized in that the control unit for the actuators (82; 84; 322) is arranged in a control center (229) or control center computer (229) that is assigned to the printing couple (04).

40. The printing couple (04) according to claim 1, 2, 3 or 4, characterized in that the printing couple (04) is arranged in a blanket-to-blanket printing couple (03) and/or in a printing tower (01).

41. The printing couple (04) according to claim 2, 3, 4 or 9, characterized in that the actuators (82; 84; 322) are remotely actuable.

42. The printing couple (04) according to claim 1, 2 or 9, characterized in that the support

bearings (321) for a plurality of rollers (304; 306; 307; 308; 309; 311) each have the same number of actuators (322).

43. The printing couple (04) according to claim 1, 2, 3 or 4, characterized in that the bearing units (14) that are connected to the same cylinder (06; 07; 312) each have the same number of actuators (82; 84).

44. The printing couple (04) according to claim 1, 2 or 9, characterized in that the support bearings (321) that are connected to the same roller (304; 306; 307; 308; 309; 311) each have the same number of actuators (322).

45. The printing couple (04) according to claim 1, 2 or 9, characterized in that each support bearing (321) in a housing has a plurality of actuators (322).

46. The printing couple (04) according to claim 1, 2 or 9, characterized in that the control unit adjusts the actuators (322) using controllable proportional valves (EP1; EP2; EP3; EP4) and/or other controllable valves (EP5; EP6).

47. The printing couple (04) according to claim 1, 2 or 9, characterized in that each support bearing (321) has a controllable fastening device, wherein, when said fastening device is in a first operating position, it blocks an essentially radial displacement of the roller (304; 306; 307; 308; 309; 311) effected by the at least one actuator (322), and in a second operating position permits said displacement.

48. The printing couple (04) according to claim 47, characterized in that the control unit controls a change in the operating position of the fastening device using at least one valve (V15; V25; V35; V45; V55; V65).

49. The printing couple (04) according to claim 46 or 48, characterized in that the valves

(EP1; EP2; EP3; EP4; EP5; EP6; V15; V25; V35; V45; V55; V65) to be controlled by the control unit are actuated electrically or electromagnetically.

50. The printing couple (04) according to claim 1, 2 or 7, characterized in that all ink forme rollers (28; 306; 307) and/or dampening rollers (41; 304) that can be engaged against one of the cylinders (06; 07; 312) are mounted in support bearings (321), each with at least one actuator (322), and are radially displaceable.

51. The printing couple (04) according to claim 2, 3 or 4, characterized in that the respective bearing unit (14) of each cylinder (06; 07; 312) has a linear bearing (70) guided by linear elements (72; 73).

52. The printing couple (04) according to claim 51, characterized in that in the respective linear bearing (70), a journal (63; 64) configured on one of the cylinders (06; 07; 312) is rotatably mounted.

53. The printing couple (04) according to claim 51, characterized in that the linear elements (72; 73) of the respective linear bearing (70) form an angle (β) measuring a maximum of 15° with a line or plane of connection (E) that extends through the respective rotational centers of the cylinders (06; 07; 312).

54. The printing couple (04) according to claim 51, characterized in that the at least one actuator (82; 84) of the bearing unit (14) displaces the respective linear bearing (70) along the linear elements (72; 73) in a direction of adjustment (S) oriented toward the printing substrate (02).

55. The printing couple (04) according to claim 1 or 51, characterized in that a length of the linear bearing (70), as viewed in the direction of adjustment (S), is smaller than a diameter of the allocated cylinder (06; 07; 312).

56. The printing couple (04) according to claim 2, 3 or 4, characterized in that the respective bearing unit (14) is attached to an interior side of a frame wall (11, 12) of the printing couple (04), which side is turned to face the respective cylinder (06; 07; 312).

UNITED STATES PATENT AND TRADEMARK OFFICE

UNITED STATES DEPARTMENT OF COMMERCE
United States Patent and Trademark Office
Address: COMMISSIONER FOR PATENTS
P.O. Box 1450
Alexandria, Virginia 22313-1450
www.uspto.gov

APPLICATION NO.	FILING DATE	FIRST NAMED INVENTOR	ATTORNEY DOCKET NO.	CONFIRMATION NO.
11/918,949	04/09/2008	Ralf Georg Christel	W1.2612 PCT-US	8972

23294 7590 11/09/2010
JONES, TULLAR & COOPER, P.C.
P.O. BOX 2266 EADS STATION
ARLINGTON, VA 22202

EXAMINER
NGUYEN, JUDY

ART UNIT	PAPER NUMBER
2854	

MAIL DATE	DELIVERY MODE
11/09/2010	PAPER

Please find below and/or attached an Office communication concerning this application or proceeding.

The time period for reply, if any, is set in the attached communication.

UNITED STATES PATENT AND TRADEMARK OFFICE

Commissioner for Patents
United States Patent and Trademark Office
P.O. Box 1450
Alexandria, VA 22313-1450
www.uspto.gov

JONES, TULLAR & COOPER, P.C.
P.O. BOX 2266 EADS STATION
ARLINGTON VA 22202

In re Application of
CHRISTEL et al.
Application No.: 11/918,949
Filed: 09 April 2008
Attorney Docket No.: W1.2612 PCT-US
For: PRINTING GROUPS COMPRISING AT LEAST TWO COOPERATING CYLINDERS AND RADIALLY MOVABLE BEARING UNITS

: DECISION ON REQUEST TO
: PARTICIPATE IN THE PCT PATENT
: PROSECUTION HIGHWAY PILOT
: PROGRAM AND PETITION
: TO MAKE SPECIAL UNDER
: 37 CFR 1.102(d)

This is a decision on the request to participate in the PCT Patent Prosecution Highway (PCT-PPH) pilot program and the petition under 37 CFR 1.102(a), filed 30 September 2010, to make the above-identified application special.

The request and petition are **DISMISSED**.

Discussion

A grantable request to participate in the PCT-PPH pilot program and petition to make special require:

(1) The U.S. application must have an eligible relationship to one or more PCT applications where the ISA or IPEA are the JPO, EPO, KIPO, or USPTO;

(2) At least one claim in the PCT application has novelty, inventive step, and industrial applicability and must be free of any observations in Box VIII in the latest work product in the international stage or applicant must identify and explain why the claim(s) is/are not subject to the observation in Box VIII;

(3) Applicant must submit a copy of the claim(s) from the PCT application(s) that have novelty, inventive step, and industrial applicability along with an English translation thereof and a statement that the English translation is accurate, if the claims are not in the English language;

(4) All the claims in the U.S. application must sufficiently correspond or be amended to sufficiently correspond to the claim(s) that have novelty, inventive step, and industrial applicability in the PCT application(s);

(5) Examination of the U.S. application has not begun;

(6) Applicant must submit a copy of the latest international work product from the PCT application indicating that the claim(s) have novelty, inventive step, and industrial applicability along with an English translation thereof and a statement that the English translation is accurate if the latest international work product is not in the English language;

(7) Applicant must submit an IDS listing the documents cited by the PCT examiner in the international work product along with copies of documents except U.S. patents or U.S. patent application publications.

Conditions (1), (3), and (5-7) above are considered to have been met. However, the request to participate in the PPH pilot program and petition fails meet conditions (2) and (4).

Regarding the requirement of condition (2), the claims in the PCT application which were indicted as having novelty, inventive step, and industrial applicability were not free of any observations in Box VIII in the latest work product in the international stage. Applicant must identify and explain why the claims are not subject to the observation in Box VIII.

Regarding the requirement of condition (4), not all claims in the U.S. application sufficiently correspond to the claims that have novelty, inventive step, and industrial applicability in the PCT application. Claims 2 and 4 of the PCT application were not indicated as having novelty, inventive step, and industrial applicability. Accordingly, at least claims 114, 116, 130, 136, 138-140, and 163-168 of the instant application do not correspond to claims that have novelty, inventive step, and industrial applicability in the PCT application.

Applicant is given **ONE** opportunity within a time period of **ONE MONTH or THIRTY DAYS**, whichever is longer, from the mailing date of this decision to correct the deficiencies. **NO EXTENSION OF TIME UNDER 37 CFR 1.136 IS PERMITTED.** If the deficiencies are not corrected with the time period given, the application will await action in its regular turn.

Response must be filed via the Electronic Filing System (EFS) with the Document Code PPH.PCT.652. Any preliminary amendments and IDS submitted with the PPH documents must be separately indexed as a preliminary amendment and IDS, respectively.

Telephone inquiries concerning this decision should be directed to Lee W. Young at 571-272-4549.

All other inquiries concerning the examination or status of the application is accessible in the PAIR system at http://www.uspto.gov/ebc/index.html.

Lee W. Young
TQAS Technology Center 2800 - Semiconductors,
Electrical & Optical Systems & Components

IN THE UNITED STATES PATENT AND TRADEMARK OFFICE

In re application of	
Ralf Georg Christel et al.	DOCUMENT CODE PPH.PCT.652
Application No. : 11/918,949	
Filed: April 9, 2008	Confirmation No.: 8972
For: PRINTING GROUPS COMPRISING AT LEAST TWO COOPERATING CYLINDERS AND RADIALLY MOVABLE BEARING UNITS	Group Art Unit: 2854 Examiner: Judy Nguyen

REQUEST FOR RECONSIDERATION OF
DECISION ON REQUEST TO PARTICIPATE
IN THE PCT-PPH PILOT PROGRAM

Commissioner for Patents
P.O. Box 1450
Alexandria, VA 22313-1450

Sir:

In response to the Decision on Request to Participate in the PCT-PPH Pilot Program, which was mailed to the undersigned on November 9, 2010, a Third Preliminary Amendment is being filed concurrently herewith. It is believed that all of the claims now pending in the subject U.S. application, as presented in that Third Preliminary Amendment, sufficiently correspond to the claims that have novelty, inventive step and industrial applicability in the corresponding PCT application. It is believed, as will be discussed below, that the claims now pending in the U.S. application are not subject to the observations in Box VIII of the IPER.

With respect to the dismissal of the original Request as failing to comply with the requirement of condition (2), the claims now pending in the U.S. application have been amended and are believed not to be subject to the observation in Box VIII of the IPER. With respect to the observation that the characterizing feature defined in dependent PCT claim 20 was vague and unclear, corresponding to U.S. claim 132, has been amended and is now believed not to be subject to the observation in Box VIII. Specifically, U.S. claim 132 now recites that each bearing unit has associated with it, in each case, a controllable device that is capable of being selected by the control unit. U.S. claim 132 is thus believed to be clear and definite.

PCT claim 25 was noted as having a characterizing feature that did not fall under the superordinate independent PCT claims 1 and 3. It is initially to be noted that corresponding U.S. claim 137 depends only from U.S. claim 113, the equivalent of PCT claim 1. U.S. claim 137 has been amended to recite that at least a further one of the cylinders (06; 07; 312) is constructed in the form of a counter-impression cylinder cooperating with a transfer cylinder. U.S. claim 137, as so amended, is believed to fall under the superordinate U.S. claim 113.

With respect to the expression in PCT claim 6 regarding the "... characteristic identifier q...", and the differences from PCT claim 3 that recited a "... characteristic identifier p ...", it is believed that PCT claim 3 has a typographical error. The verified translation of PCT/EP2006/061695, at page 108, discusses a characteristic identifier p that identifies a specific cylinder, and a characteristic identifier q that identifies a specific actuator. In the PCT claim 3 and corresponding U.S. claim 115, as filed, there was recited at least one actuator of the bearing unit and having a characteristic identifier "p".

As noted above, the identifier for the actuator is "q". U.S. claim 115 has been amended to correct "p" to "q". It is believed that this change overcomes the observation in Box VIII.

The above changes were discussed with Ms. Magdalen Greenlief of the USPTO by telephone on December 2, 2010. Ms. Greenlief advised the undersigned that the changes discussed above were appreciated and that they appeared to be sufficient to explain why the U.S. claims were not subject to the observations in Box VIII of the IPER in the corresponding PCT application. Ms. Greenlief requested the undersigned to advise TQAS Lee Young of that discussion.

Regarding the requirement of condition (4), it is noted that PCT claims 2 and 4 were not indicated as having novelty, inventive step and industrial applicability. The error on the part of the undersigned, in including them in the Second Preliminary Amendment, is regretted. U.S. claims 114 and 116, which correspond to PCT claims 2 and 4, have now been cancelled. U.S. claims 130, 136, 138-168 have been amended, where necessary, to insure that they now depend, either directly or indirectly on one of the U.S. claims that correspond to one of the PCT claims which do have novelty, inventive step and industrial applicability.

A replacement Claims Correspondence Table is being submitted herewith. It reflects the cancellation of U.S. claims 114 and 116 and the several changes in dependency of the other claims that originally depended from those now cancelled claims.

It is requested that this submission be considered in concert with the Third Preliminary Amendment that is being filed concurrently herewith. It is believed that the subject U.S. application is now in compliance with all of the conditions set forth in 1351 OG 208. Granting of the Request to Participate in the PCT-PPH Pilot Program is respectfully requested.

Respectfully Submitted,

Ralf Georg Christel et al.
Applicants

JONES, TULLAR & COOPER, P.C.
Attorneys for Applicants

Douglas R. Hanscom
Reg. No. 26,600

December 3, 2010

JONES, TULLAR & COOPER, P.C.
Customer No. 23294
P.O. Box 2266 Eads Station
Arlington, Virginia 22202
Phone: (703) 415-1500
Fax: (703) 415-1508
E-mail: mail@jonestullarcooper.com

Attorney Docket: W1.2612 PCT-US

Approved for use through 01/31/2012. OMB 0651-0058
U.S.Patent and Trademark Office; U.S. DEPARTMENT OF COMMERCE
Under the Paperwork Reduction Act of 1995, no persons are required to respond to a collection of information unless it displays a valid OMB control number.

REQUEST FOR PARTICIPATION IN THE PCT-PPH PILOT PROGRAM BETWEEN THE EPO AND THE USPTO

(continued)

Application No.:	11/918,949
First Named Inventor:	Ralf Georg Christel

d. **(1) An information disclosure statement listing the documents cited in the international work products (ISR, WO/ISA, WO/IPEA, IPER) of the corresponding PCT application.**

☐ Is attached

☑ Has already been filed in the above-identified U.S. application on October 22, 2007

(2) Copies of all documents (except) for U.S. patents or U.S. patent application publications)

☐ Are attached.

☑ Have already been filed in the above-identified U.S. application on October 22, 2007

II. REPLACEMENT Claims Correspondence Table:

Claims in US Application	Patentable Claims in the corresponding PCT Application	Explanation regarding the correspondence
113	1	direct correspondence
115	3	direct correspondence
117	5	U.S. claims amended to remove multiple dependencies
		from PCT claims
118	6	direct correspondence
119	7	U.S. claims amended to remove multiple dependencies
		from PCT claims
120 - 122	8 - 10	direct correspondence
123-133	11 - 21	U.S. claims amended to remove multiple dependencies
		from PCT claims
134	22	direct correspondence
136 - 137	23 - 25	U.S. claims amended to remove multiple dependencies
		from PCT claims
138 - 140	26 - 28	direct correspondence
141 - 49	29 - 37	U.S. claims amended to remove multiple dependencies
		from PCT claims
150	38	direct correspondence
151 - 159	39 - 47	U.S. claims amended to remove multiple dependencies
		from PCT claims
160	48	direct correspondence

REQUEST FOR PARTICIPATION IN THE PCT-PPH PILOT PROGRAM BETWEEN THE EPO AND THE USPTO

(continued)

Application No.	11/918,949
First Named Inventor	Ralf Georg Christel

d. (1) An information disclosure statement listing the documents cited in the international work products (ISR, WO/ISA, WO/IPEA, IPER) of the corresponding PCT application.

- [ ] is attached
- [x] Has already been filed in the above-identified U.S. application on October 22, 2007

(2) Copies of all documents (except) for U.S. patents or U.S. patent application publications)

- [ ] Are attached
- [x] Have already been filed in the above-identified U.S. application on October 22, 2007

II. REPLACEMENT Claims Correspondence Table:

Claims in US Application	Patentable Claims in the corresponding PCT Application	Explanation regarding the correspondence
161 - 163	49 - 51	U.S. claims amended to remove multiple dependencies
		from PCT claims
164 - 166	52 - 54	direct correspondence
167, 168	55, 56	U.S. claims amended to remove multiple dependencies
		from PCT claims

III. All the claims in the US application sufficiently correspond to the patentable claims in the corresponding PCT application.

Signature	Date December 3, 2010
Name (Print/Type) Douglas R. Hanscom	Registration Number 26600

UNITED STATES PATENT AND TRADEMARK OFFICE

UNITED STATES DEPARTMENT OF COMMERCE
United States Patent and Trademark Office
Address: COMMISSIONER FOR PATENTS
P.O. Box 1450
Alexandria, Virginia 22313-1450
www.uspto.gov

APPLICATION NO.	FILING DATE	FIRST NAMED INVENTOR	ATTORNEY DOCKET NO.	CONFIRMATION NO.
11/918,949	04/09/2008	Ralf Georg Christel	W1.2612 PCT-US	8972

23294 7590 12/08/2010
JONES, TULLAR & COOPER, P.C.
P.O. BOX 2266 EADS STATION
ARLINGTON, VA 22202

EXAMINER
NGUYEN, ANTHONY H

ART UNIT	PAPER NUMBER
2854	

MAIL DATE	DELIVERY MODE
12/08/2010	PAPER

Please find below and/or attached an Office communication concerning this application or proceeding.

The time period for reply, if any, is set in the attached communication.

UNITED STATES PATENT AND TRADEMARK OFFICE

Commissioner for Patents
United States Patent and Trademark Office
P.O. Box 1450
Alexandria, VA 22313-1450
www.uspto.gov

JONES, TULLAR & COOPER, P.C.
P.O. BOX 2266 EADS STATION
ARLINGTON VA 22202

In re Application of
CHRISTEL et al.
Application No.: 11/918,949
Filed: 09 April 2008
Attorney Docket No.: W1.2612 PCT-US
For: PRINTING GROUPS COMPRISING AT LEAST TWO COOPERATING CYLINDERS AND RADIALLY MOVABLE BEARING UNITS

: DECISION ON REQUEST TO
: PARTICIPATE IN THE PCT PATENT
: PROSECUTION HIGHWAY PILOT
: PROGRAM AND PETITION
: TO MAKE SPECIAL UNDER
: 37 CFR 1.102(d)

This is a decision on the request to participate in the PCT Patent Prosecution Highway (PCT-PPH) pilot program and the petition under 37 CFR 1.102(a), filed 30 September 2010 and renewed on 03 December 2010, to make the above-identified application special.

The request and petition are **GRANTED**.

Discussion

A grantable request to participate in the PCT-PPH pilot program and petition to make special require:

(1) The U.S. application must disclose an eligible relationship to one or more PCT applications where the ISA or IPEA are the JPO, EPO, KIPO, or USPTO;

(2) At least one claim in the PCT application has novelty, inventive step, and industrial applicability and must be free of any observations in Box VIII in the latest work product in the international stage or applicant must identify and explain why the claim(s) is/are not subject to the observation in Box VIII;

(3) Applicant must submit a copy of the claim(s) from the PCT application(s) that have novelty, inventive step, and industrial applicability along with an English translation thereof and a statement that the English translation is accurate, if the claims are not in the English language;

(4) All the claims in the U.S. application must sufficiently correspond or be amended to sufficiently correspond to the claim(s) that have novelty, inventive step, and industrial applicability in the PCT application(s);

(5) Examination of the U.S. application has not begun;

(6) Applicant must submit a copy of the latest international work product from the PCT application indicating that the claim(s) have novelty, inventive step, and industrial applicability along with an English translation thereof and a statement that the English translation is accurate if the latest international work product is not in the English language;

(7) Applicant must submit an IDS listing the documents cited by the PCT examiner in the international work product along with copies of documents except U.S. patents or U.S. patent application publications.

The request to participate in the PCT-PPH pilot program and petition comply with the above requirements. Accordingly, the above-identified application has been accorded "special" status.

Telephone inquiries concerning this decision should be directed to Lee W. Young at 571-272-4549.

All other inquiries concerning the examination or status of the application is accessible in the PAIR system at http://www.uspto.gov/ebc.index.html.

This application will be forwarded to the examiner for action on the merits commensurate with this decision once this application's formality reviews have been completed.

Lee W. Young
TQAS Technology Center 2800 - Semiconductors,
Electrical & Optical Systems & Components

UNITED STATES PATENT AND TRADEMARK OFFICE

Commissioner for Patents
United States Patent and Trademark Office
P.O. Box 1450
Alexandria, VA 22313-1450
www.uspto.gov

MICHAELSON & ASSOCIATES
P.O. BOX 8489
RED BANK, NJ 07701-8489

MAILED
JAN 19 2011
OFFICE OF PETITIONS

In re Application of	:	
BEEKHUIS, Christiaan W.	:	
Application No. 11/918, 970	:	DECISION ON PETITION
Filed: October 22, 2007	:	TO WITHDRAW
Attorney Docket No. **004734**	:	FROM RECORD
	:	

This is a decision on the Request to Withdraw as attorney or agent of record under 37 C.F.R. § 1.36(b), filed December 02, 2010.

The request is **NOT APPROVED** as moot.

A review of the file record indicates that the power of attorney to Michaelson & Associates has been revoked by the assignee of the patent application on December 13, 2010. Accordingly, the request to withdraw under 37 C.F.R. § 1.36(b) is moot.

All future communications from the Office will continue to be directed to the below-listed address until otherwise notified by applicant.

Telephone inquires concerning this decision should be directed to the undersigned at 571-272-4231.

Michelle R. Eason
Paralegal Specialist
Office of Petitions

cc: **WADDEY & PATTERSON, P.C.**
1600 DIVISION STREET, SUITE 500
NASHVILLE TN 37203

SPE RESPONSE FOR CERTIFICATE OF CORRECTION

Paper No.: _____

DATE : September 13, 2010

TO SPE OF : ART UNIT 2821 - SPE

SUBJECT : Request for Certificate of Correction for Appl. No.: 11/919,009 Patent No.: 7,750,583 B2

Please respond to this request for a certificate of correction within 7 days.

FOR IFW FILES:

Please review the requested changes/corrections as shown in the **COCIN** document(s) in the IFW application image. No new matter should be introduced, nor should the scope or meaning of the claims be changed.
Please complete the response (see below) and forward the completed response to scanning using document code **COCX**.

FOR PAPER FILES:

Please review the requested changes/corrections as shown in the attached certificate of correction. Please complete this form (see below) and forward it with the file to:

Certificates of Correction Branch (CofC)
Randolph Square Building
2800 South Randolph Street
Arlington, VA 22206

Antonio Johnson

Should the dependency in Claim 3 be changed from "2" to "1"?
See COCIN dated 09-02-2010

Certificates of Correction Branch
(571)272-0483

Thank You For Your Assistance

The request for issuing the above-identified correction(s) is hereby:
Note your decision on the appropriate box.

X Approved	**All** changes apply.
☐ **Approved in Part**	Specify below which changes **do not** apply.
☐ **Denied**	State the reasons for denial below.

Comments: Original claim 3 was dependent on claim 1 as filed by Applicants. The error was made by the Office during publication process perhaps. Approval of the applicants' request for correction is suggested. Exmr. T. Tran 09/13/2010

_____SPE Douglas W. Owens Art Unit 2821

UNITED STATES PATENT AND TRADEMARK OFFICE

Commissioner for Patents
United States Patent and Trademark Office
P.O. Box 1450
Alexandria, VA 22313-1450
www.uspto.gov

CONTINENTAL TEVES, INC.
ONE CONTINENTAL DRIVE
AUBURN HILLS, MI 48326-1581

MAILED

NOV 07 2011

OFFICE OF PETITIONS

In re Application of	:	
Alexander STILLER	:	
Application No. 11/919,014	:	DECISION ON PETITION
Filed: October 22, 2007	:	
Attorney Docket No. AG028	:	

This is a decision on the petition under 37 CFR 1.137(b), filed October 25, 2011, to revive the above-identified application.

The petition is **GRANTED**.

The above-identified application became abandoned for failure to reply in a timely manner to the non-final Office action mailed February 1, 2011, which set a shortened statutory period for reply of three (3) months. No extensions of time under the provisions of 37 CFR 1.136(a) were obtained. Accordingly, the above-identified application became abandoned on May 2, 2011.

The petition satisfies the conditions for revival pursuant to the provisions of 37 CFR 1.137(b) in that (1) the reply in the form of an amendment; (2) the petition fee of $1860; and (3) the required statement of unintentional delay have been received. Accordingly, the reply to the non-final Office action of February 1, 2011 is accepted as having been unintentionally delayed.

It is not apparent whether the person signing the statement of unintentional delay was in a position to have firsthand or direct knowledge of the facts and circumstances of the delay at issue. Nevertheless, such statement is being treated as having been made as the result of a reasonable inquiry into the facts and circumstances of such delay. See 37 CFR 10.18(b) and Changes to Patent Practice and Procedure; Final Rule Notice, 62 Fed. Reg. 53131, 53178 (October 10, 1997), 1203 Off. Gaz. Pat. Office 63, 103 (October 21, 1997). In the event that such an inquiry has not been made, petitioner must make such an inquiry. If such inquiry results in the discovery that it is not correct that the entire delay in filing the required reply from the due date for the reply until the filing of a grantable petition pursuant to 37 CFR 1.137(b) was unintentional, petitioner must notify the Office.

There is no indication that the person signing the petition was ever given a power of attorney to prosecute the application. If the person signing the petition desires to receive future correspondence regarding this application, the appropriate power of attorney document must be

submitted. While a courtesy copy of this decision is being mailed to the person signing the petition, all future correspondence will be directed to the address currently of record until appropriate instructions are received.

Telephone inquiries concerning this decision should be directed to Joanne Hama at (571) 272-2911 or in her absence, the undersigned at (571) 272-7099.

The application file is being referred to Technology Center AU 3663 for appropriate action on the concurrently filed amendment.

David Bucci
Petitions Examiner
Office of Petitions

cc: John M. Siragusa
Carlson, Gaskey & Olds, P.C.
400 West Maple Rd., Suite 350
Birmingham, MI 48009

UNITED STATES PATENT AND TRADEMARK OFFICE

Commissioner for Patents
United States Patent and Trademark Office
P.O. Box 1450
Alexandria, VA 22313-1450
www.uspto.gov

WADDEY & PATTERSON, P.C.
1600 DIVISION STREET, SUITE 500
NASHVILLE TN 37203

MAILED

DEC 20 2010

OFFICE OF PETITIONS

In re Application of	:	DECISION ON PETITION
Christiaan Willem Beekhuis	:	TO WITHDRAW
Application No. 11/919,016	:	FROM RECORD
Filed: October 22, 2007	:	
Attorney Docket No. **004771**	:	

This is a decision on the request to withdraw as attorney of record under 37 CFR § 1.36(b), filed December 2, 2010.

The request is **NOT APPROVED** as moot.

A review of the file record indicates that the power of attorney to attorneys/agents associated with Customer Number 007265 has been revoked by the assignee who has intervened of the patent application on December 13, 2010. Accordingly, the request to withdraw under 37 CFR § 1.36(b) is moot.

All future communications from the Office will continue to be directed to the above-listed address until otherwise notified by applicant.

Telephone inquiries concerning this decision should be directed to the undersigned at 571-272-4584.

/JoAnne Burke/
JoAnne Burke
Petitions Examiner
Office of Petitions

cc: MICHAELSON & ASSOCIATES
P.O. BOX 8489
RED BANK, NJ 07701-8489

UNITED STATES PATENT AND TRADEMARK OFFICE

Commissioner for Patents
United States Patent and Trademark Office
P.O. Box 1450
Alexandria, VA 22313-1450
www.uspto.gov

CONTINENTAL TEVES, INC.
ONE CONTINENTAL DRIVE
AUBURN HILLLS MI 48326-1581

MAILED
MAY 05 2011
OFFICE OF PETITIONS

In re Application of	:	
Jovan Knezevic et al.	:	
Application No. 11/919,017	:	DECISION ON PETITION
Filed: October 22, 2007	:	
Attorney Docket No. **TM052**	:	

This is a decision on the petition under the unintentional provisions of 37 CFR 1.137(b), filed December 29, 2010, to revive the above-identified application.

The petition is **GRANTED**.

The application became abandoned for failure to reply in a timely manner to the non-final Office action mailed, December 16, 2009, which set a shortened statutory period for reply of three (3) months. No extensions of time under the provisions of 37 CFR 1.136(a) were obtained. Accordingly, the application became abandoned on March 17, 2010.

The petition satisfies the requirements of 37 CFR 1.137(b) in that petitioner has supplied (1) the reply in the form of an amendment, (2) the petition fee of $1620, and (3) an adequate statement of unintentional delay. Accordingly, the reply to the non-final Office Action of December 16, 2009 is accepted as having been unintentionally delayed.

Telephone inquiries concerning this decision should be directed to Tredelle Jackson at (571) 272-2783.

This application is being referred to Technology Center AU 2837 for appropriate action on the concurrently filed amendment.

Ramesh Krishnamurthy

Ramesh Krishnamurthy
Petitions Examiner
Office of Petitions

UNITED STATES PATENT AND TRADEMARK OFFICE

Commissioner for Patents
United States Patent and Trademark Office
P.O. Box 1450
Alexandria, VA 22313-1450
www.uspto.gov

MICHAELSON & ASSOCIATES
P.O. BOX 8489
RED BANK, NJ 07701-8489

MAILED

JAN 19 2011

OFFICE OF PETITIONS

In re Application of	:	
BEEKHUIS, Christiaan W.	:	
Application No. 11/919,042	:	DECISION ON PETITION
Filed: October 22, 2007	:	TO WITHDRAW
Attorney Docket No. **004733**	:	FROM RECORD
	:	

This is a decision on the Request to Withdraw as attorney or agent of record under 37 C.F.R. § 1.36(b), filed December 02, 2010.

The request is **NOT APPROVED** as moot.

A review of the file record indicates that the power of attorney to Michaelson & Associates has been revoked by the assignee of the patent application on December 13, 2010. Accordingly, the request to withdraw under 37 C.F.R. § 1.36(b) is moot.

All future communications from the Office will continue to be directed to the below-listed address until otherwise notified by applicant.

Telephone inquires concerning this decision should be directed to the undersigned at 571-272-4231.

Michelle R. Eason
Paralegal Specialist
Office of Petitions

cc: **WADDEY & PATTERSON, P.C.**
1600 DIVISION STREET, SUITE 500
NASHVILLE TN 37203

UNITED STATES PATENT AND TRADEMARK OFFICE

Commissioner for Patents
United States Patent and Trademark Office
P.O. Box 1450
Alexandria, VA 22313-1450
www.uspto.gov

MICHAELSON & ASSOCIATES
P.O. BOX 8489
RED BANK, NJ 07701-8489

MAILED
JAN 19 2011
OFFICE OF PETITIONS

In re Application of	:	
BEEKHUIS, Christiaan W.	:	
Application No. 11/919,043	:	DECISION ON PETITION
Filed: October 22, 2007	:	TO WITHDRAW
Attorney Docket No. **004732**	:	FROM RECORD
	:	

This is a decision on the Request to Withdraw as attorney or agent of record under 37 C.F.R. § 1.36(b), filed December 02, 2010.

The request is **NOT APPROVED** as moot.

A review of the file record indicates that the power of attorney to Michaelson & Associates has been revoked by the assignee of the patent application on December 13, 2010. Accordingly, the request to withdraw under 37 C.F.R. § 1.36(b) is moot.

All future communications from the Office will continue to be directed to the below-listed address until otherwise notified by applicant.

Telephone inquires concerning this decision should be directed to the undersigned at 571-272-4231.

Michelle R. Eason
Paralegal Specialist
Office of Petitions

cc: **WADDEY & PATTERSON, P.C.**
1600 DIVISION STREET, SUITE 500
NASHVILLE TN 37203

Doc Code: PET.RELIEF
Document Description: Certification and Request for Disaster Relief

PTO/SB/425 (03-11)

CERTIFICATION AND REQUEST FOR RELIEF DUE TO EVENTS OF MARCH 11, 2011, IN JAPAN (Page 1 of 2)

Nonprovisional Application Number or Control Number (if applicable)	Patent Number (if applicable):
Appl. No. 11/919,118 - Attorney Docket: 0445-0386PUS1	
First Named Inventor:	Title of Invention:
Hideyuki KOBAYASHI et al.	Stretch Sheet and Process of Producing the Same

APPLICANT/PATENTEE/REEXAMINATION PARTY HEREBY CERTIFIES AND REQUESTS THE FOLLOWING FOR THE ABOVE-IDENTIFIED APPLICATION/PATENT/REEXAMINATION PROCEEDING.

1. FOR PATENT APPLICATIONS AND REEXAMINATION PROCEEDINGS PENDING IN THE USPTO AS OF MARCH 11, 2011, IN WHICH A COMMUNICATION FROM THE USPTO IS SOUGHT TO BE REMAILED:

   a. One or more inventors, an assignee, or a correspondence address (for the application/proceeding) is in an area of Japan affected by the earthquake and/or tsunami of March 11, 2011.

   b. A reply or response to an Office action (final, non-final, or other), a notice of allowance, or other Office notice (hereinafter collectively referred to as "Office communication") is outstanding on March 11, 2011.

   c. The statutory or non-statutory time period set for response has not yet expired.

   d. Withdrawal and reissuance of the Office communication is requested.

   e. It is acknowledged that if this request is not made within sufficient time so that withdrawal and reissuance of the Office communication occur prior to expiration of the statutory or non-statutory time period (as permitted to be extended under 37 CFR 1.136(a), or as extended under 37 CFR 1.550(c) or 1.956), this request may not be granted.

   f. The need for the reissuance of the Office communication was due to the effects of the earthquake and/or tsunami of March 11, 2011.

   g. This request is being sent via EFS-Web or by mail directed to Mail Stop Petition, Commissioner for Patents, P.O. Box 1450, Alexandria, VA 22313-1450.

2. FOR PATENTEES WHO WERE UNABLE TO TIMELY PAY A PATENT MAINTENANCE FEE DURING THE SIX-MONTH GRACE PERIOD FOLLOWING THE WINDOW TO PAY THE MAINTENANCE FEE:

   a. The original window of time to pay the maintenance fee without the surcharge required by 37 CFR 1.20(h) expired on or after March 11, 2011.

   b. The delay in paying the fee was due to the effects of the earthquake and/or tsunami of March 11, 2011.

   c. The USPTO is requested to *sua sponte* waive the surcharge in 37 CFR 1.20(h) for paying a maintenance fee during the six-month grace period following the window to pay the maintenance fee.

   d. This request and payment of the maintenance fee during the six-month grace period following the window to pay the maintenance fee is being mailed to: Director of the United States Patent and Trademark Office, Attn: Maintenance Fee, 2051 Jamieson Avenue, Suite 300, Alexandria, VA 22314; or being transmitted via facsimile to: 571-273-6500.

CERTIFICATION AND REQUEST FOR RELIEF DUE TO EVENTS OF MARCH 11, 2011, IN JAPAN (Page 2 of 2)

3. FOR PATENTEES WHO NEED TO FILE A PETITION TO ACCEPT A DELAYED MAINTENANCE FEE PAYMENT UNDER 37 CFR 1.378(c):

   a. The maintenance fee payment was required to have been paid after March 10, 2011.

   b. A petition under 37 CFR 1.378(c) (using USPTO form PTO/SB/66 – Petition to Accept Unintentionally Delayed Payment of Maintenance Fee in an Expired Patent (37 CFR 1.378(c))) is being promptly filed accompanied by the applicable maintenance fee payment (but not the surcharge under 37 CFR 1.20(i)).

   c. The delay in payment of the maintenance fee was due to the effects of the earthquake and/or tsunami of March 11, 2011.

   d. The USPTO is requested to *sua sponte* waive the surcharge in 37 CFR 1.20(i) for accepting a delayed maintenance fee payment.

   e. It is acknowledged that the petition to accept a delayed maintenance fee payment under 37 CFR 1.378(c) must be filed by March 11, 2012, in order to be entitled to a waiver of the surcharge under 37 CFR 1.20(i).

   f. It is acknowledged that the petition to accept a delayed maintenance fee payment under 37 CFR 1.378(c) must be filed within twenty-four months from the expiration date of the patent. *See* 35 U.S.C 41(c).

   g. This request and the petition to accept a delayed maintenance fee payment under 37 CFR 1.378(c) is being submitted via EFS-Web or by mail directed to Mail Stop Petition, Commissioner for Patents, P.O. Box 1450, Alexandria, VA 22313-1450.

4. FOR NONPROVISIONAL PATENT APPLICATIONS FILED WITHOUT AN EXECUTED OATH OR DECLARATION OR PAYMENT OF THE BASIC FILING FEE, SEARCH FEE, AND/OR EXAMINATION FEE:

   a. The nonprovisional patent application was filed on or after March 11, 2011, and prior to April 12, 2011.

   b. The late filing of the oath or declaration or the basic filing fee, search fee, or examination fee was due to the effects of the earthquake and/or tsunami of March 11, 2011.

   c. The USPTO is requested to *sua sponte* waive the surcharge set forth in 37 CFR 1.16(f) for the late filing of the oath or declaration or basic filing fee, search fee, and/or examination fee.

   d. This request, together with the executed oath or declaration or the basic filing fee, search fee, or examination fee, as well as the reply to the Notice to File Missing Parts, is being submitted via EFS-Web or by mail directed to Mail Stop Missing Parts, Commissioner for Patents, P.O. Box 1450, Alexandria, VA 22313-1450.

Signature	Date June 2, 2011
Name (Print/Typed) John W. Bailey	Practitioner Registration Number 32,881

*Note: Signatures of all the inventors, § 1.41(b) applicants, or assignees of record of the entire interest or their representative(s), or reexamination requesters at the appeal stage are required in accordance with 37 CFR 1.33 and 11.18. Please see 37 CFR 1.4(d) for the form of the signature. If necessary, submit multiple forms for more than one signature, see below**

☐ *Total of ..... forms are submitted.

Privacy Act Statement

The **Privacy Act of 1974 (P.L. 93-579)** requires that you be given certain information in connection with your submission of the attached form related to a patent application or patent. Accordingly, pursuant to the requirements of the Act, please be advised that: (1) the general authority for the collection of this information is 35 U.S.C. 2(b)(2); (2) furnishing of the information solicited is voluntary; and (3) the principal purpose for which the information is used by the U.S. Patent and Trademark Office is to process and/or examine your submission related to a patent application or patent. If you do not furnish the requested information, the U.S. Patent and Trademark Office may not be able to process and/or examine your submission, which may result in termination of proceedings or abandonment of the application or expiration of the patent.

The information provided by you in this form will be subject to the following routine uses:

1. The information on this form will be treated confidentially to the extent allowed under the Freedom of Information Act (5 U.S.C. 552) and the Privacy Act (5 U.S.C 552a). Records from this system of records may be disclosed to the Department of Justice to determine whether disclosure of these records is required by the Freedom of Information Act.
2. A record from this system of records may be disclosed, as a routine use, in the course of presenting evidence to a court, magistrate, or administrative tribunal, including disclosures to opposing counsel in the course of settlement negotiations.
3. A record in this system of records may be disclosed, as a routine use, to a Member of Congress submitting a request involving an individual, to whom the record pertains, when the individual has requested assistance from the Member with respect to the subject matter of the record.
4. A record in this system of records may be disclosed, as a routine use, to a contractor of the Agency having need for the information in order to perform a contract. Recipients of information shall be required to comply with the requirements of the Privacy Act of 1974, as amended, pursuant to 5 U.S.C. 552a(m).
5. A record related to an International Application filed under the Patent Cooperation Treaty in this system of records may be disclosed, as a routine use, to the International Bureau of the World Intellectual Property Organization, pursuant to the Patent Cooperation Treaty.
6. A record in this system of records may be disclosed, as a routine use, to another federal agency for purposes of National Security review (35 U.S.C. 181) and for review pursuant to the Atomic Energy Act (42 U.S.C. 218(c)).
7. A record from this system of records may be disclosed, as a routine use, to the Administrator, General Services, or his/her designee, during an inspection of records conducted by GSA as part of that agency's responsibility to recommend improvements in records management practices and programs, under authority of 44 U.S.C. 2904 and 2906. Such disclosure shall be made in accordance with the GSA regulations governing inspection of records for this purpose, and any other relevant (*i.e.*, GSA or Commerce) directive. Such disclosure shall not be used to make determinations about individuals.
8. A record from this system of records may be disclosed, as a routine use, to the public after either publication of the application pursuant to 35 U.S.C. 122(b) or issuance of a patent pursuant to 35 U.S.C. 151. Further, a record may be disclosed, subject to the limitations of 37 CFR 1.14, as a routine use, to the public if the record was filed in an application which became abandoned or in which the proceedings were terminated and which application is referenced by either a published application, an application open to public inspection or an issued patent.
9. A record from this system of records may be disclosed, as a routine use, to a Federal, State, or local law enforcement agency, if the USPTO becomes aware of a violation or potential violation of law or regulation.

UNITED STATES PATENT AND TRADEMARK OFFICE

Commissioner for Patents
United States Patent and Trademark Office
P.O. Box 1450
Alexandria, VA 22313-1450
www.uspto.gov

BIRCH STEWART KOLASCH & BIRCH
PO BOX 747
FALLS CHURCH VA 22040-0747

MAILED
JUN 08 2011
OFFICE OF PETITIONS

In re Application of	:	
Kobayashi et al.	:	
Application No. 11/919,118	:	DECISION ON PETITION
Filed: January 24, 2008	:	
Attorney Docket No. 0445-0386PUS1	:	

This is a decision on the request filed June 2, 2011, seeking relief under the provisions of "Relief Available to Patent and Trademark Applicants, Patentees and Trademark Owners Affected by the Catastrophic Events of March 11, 2011 in Japan," 1365 Off. Gaz. Pat. Office 170 (April 19, 2011).

The request for relief is **GRANTED**.

In the above-identified application, an Office action was mailed on February 2, 2011. The instant petition was filed prior to the expiration of the period for reply and the certifications for granting of relief are considered to be met by the submission of the request.

Telephone inquires concerning this decision should be directed to the undersigned at 571-272-7751. All other inquires concerning either the examination or status of the application should be directed to the Technology Center.

This application is being referred to the Technology Center, Art Unit 1742 for re-mailing the Office action of February 2, 2011. The period for reply will run from the mailing date of the Office action.

/Joan Olszewski/
Joan Olszewski
Petitions Examiner
Office of Petitions

UNITED STATES PATENT AND TRADEMARK OFFICE

Commissioner for Patents
United States Patent and Trademark Office
P.O. Box 1450
Alexandria, VA 22313-1450
www.uspto.gov

Martin P Hoffman
Hoffman, Wasson & Gitler
2461 South Clark Street
Arlington VA 22202

MAILED

SEP 13 2010

OFFICE OF PETITIONS

In re Application of	:	
Bruce Leigh Kiehne	:	
Application No. 11/919,121	:	DECISION ON PETITION
Filed: October 24, 2007	:	
Attorney Docket No. **A-10682**	:	

This is a decision on the petition under the unintentional provisions of 37 CFR 1.137(b), filed August 19, 2010, to revive the above-identified application.

The petition is **GRANTED**.

This application became abandoned for failure to timely submit corrected drawings on or before July 16, 2010, as required by the Notice of Allowability, mailed April 16, 2010. Accordingly, the date of abandonment of this application is July 17, 2010.

The petition satisfies the requirements of 37 CFR 1.137(b) in that petitioner has supplied (1) the reply in the form of corrected drawings, (2) the petition fee of $810; and (3) a proper statement of unintentional delay.

Telephone inquiries concerning this decision should be directed to JoAnne Burke at 571-272-4584.

This application is being referred to the Office of Data Management for processing into a patent.

/JoAnne Burke/
JoAnne Burke
Petitions Examiner
Office of Petitions

Doc Code: PET.RELIEF
Document Description: Certification and Request for Disaster Relief

PTO/SB/425 (03-11)

CERTIFICATION AND REQUEST FOR RELIEF DUE TO EVENTS OF MARCH 11, 2011, IN JAPAN (Page 1 of 2)

Nonprovisional Application Number or Control Number (if applicable): 11/919,180	Patent Number (if applicable):
First Named Inventor: Akihiko GUNJI	Title of Invention: Stretch Non-woven Fabric and Process of Producing the Same

APPLICANT/PATENTEE/REEXAMINATION PARTY HEREBY CERTIFIES AND REQUESTS THE FOLLOWING FOR THE ABOVE-IDENTIFIED APPLICATION/PATENT/REEXAMINATION PROCEEDING.

1. FOR PATENT APPLICATIONS AND REEXAMINATION PROCEEDINGS PENDING IN THE USPTO AS OF MARCH 11, 2011, IN WHICH A COMMUNICATION FROM THE USPTO IS SOUGHT TO BE REMAILED:

   a. One or more inventors, an assignee, or a correspondence address (for the application/proceeding) is in an area of Japan affected by the earthquake and/or tsunami of March 11, 2011.

   b. A reply or response to an Office action (final, non-final, or other), a notice of allowance, or other Office notice (hereinafter collectively referred to as "Office communication") is outstanding on March 11, 2011.

   c. The statutory or non-statutory time period set for response has not yet expired.

   d. Withdrawal and reissuance of the Office communication is requested.

   e. It is acknowledged that if this request is not made within sufficient time so that withdrawal and reissuance of the Office communication occur prior to expiration of the statutory or non-statutory time period (as permitted to be extended under 37 CFR 1.136(a), or as extended under 37 CFR 1.550(c) or 1.956), this request may not be granted.

   f. The need for the reissuance of the Office communication was due to the effects of the earthquake and/or tsunami of March 11, 2011.

   g. This request is being sent via EFS-Web or by mail directed to Mail Stop Petition, Commissioner for Patents, P.O. Box 1450, Alexandria, VA 22313-1450.

2. FOR PATENTEES WHO WERE UNABLE TO TIMELY PAY A PATENT MAINTENANCE FEE DURING THE SIX-MONTH GRACE PERIOD FOLLOWING THE WINDOW TO PAY THE MAINTENANCE FEE:

   a. The original window of time to pay the maintenance fee without the surcharge required by 37 CFR 1.20(h) expired on or after March 11, 2011.

   b. The delay in paying the fee was due to the effects of the earthquake and/or tsunami of March 11, 2011.

   c. The USPTO is requested to *sua sponte* waive the surcharge in 37 CFR 1.20(h) for paying a maintenance fee during the six-month grace period following the window to pay the maintenance fee.

   d. This request and payment of the maintenance fee during the six-month grace period following the window to pay the maintenance fee is being mailed to: Director of the United States Patent and Trademark Office, Attn: Maintenance Fee, 2051 Jamieson Avenue, Suite 300, Alexandria, VA 22314; or being transmitted via facsimile to: 571-273-6500.

CERTIFICATION AND REQUEST FOR RELIEF DUE TO EVENTS OF MARCH 11, 2011, IN JAPAN (Page 2 of 2)

3. FOR PATENTEES WHO NEED TO FILE A PETITION TO ACCEPT A DELAYED MAINTENANCE FEE PAYMENT UNDER 37 CFR 1.378(c):

   a. The maintenance fee payment was required to have been paid after March 10, 2011.

   b. A petition under 37 CFR 1.378(c) (using USPTO form PTO/SB/66 – Petition to Accept Unintentionally Delayed Payment of Maintenance Fee in an Expired Patent (37 CFR 1.378(c))) is being promptly filed accompanied by the applicable maintenance fee payment (but not the surcharge under 37 CFR 1.20(i)).

   c. The delay in payment of the maintenance fee was due to the effects of the earthquake and/or tsunami of March 11, 2011.

   d. The USPTO is requested to *sua sponte* waive the surcharge in 37 CFR 1.20(i) for accepting a delayed maintenance fee payment.

   e. It is acknowledged that the petition to accept a delayed maintenance fee payment under 37 CFR 1.378(c) must be filed by March 11, 2012, in order to be entitled to a waiver of the surcharge under 37 CFR 1.20(i).

   f. It is acknowledged that the petition to accept a delayed maintenance fee payment under 37 CFR 1.378(c) must be filed within twenty-four months from the expiration date of the patent. *See* 35 U.S.C 41(c).

   g. This request and the petition to accept a delayed maintenance fee payment under 37 CFR 1.378(c) is being submitted via EFS-Web or by mail directed to Mail Stop Petition, Commissioner for Patents, P.O. Box 1450, Alexandria, VA 22313-1450.

4. FOR NONPROVISIONAL PATENT APPLICATIONS FILED WITHOUT AN EXECUTED OATH OR DECLARATION OR PAYMENT OF THE BASIC FILING FEE, SEARCH FEE, AND/OR EXAMINATION FEE:

   a. The nonprovisional patent application was filed on or after March 11, 2011, and prior to April 12, 2011.

   b. The late filing of the oath or declaration or the basic filing fee, search fee, or examination fee was due to the effects of the earthquake and/or tsunami of March 11, 2011.

   c. The USPTO is requested to *sua sponte* waive the surcharge set forth in 37 CFR 1.16(f) for the late filing of the oath or declaration or basic filing fee, search fee, and/or examination fee.

   d. This request, together with the executed oath or declaration or the basic filing fee, search fee, or examination fee, as well as the reply to the Notice to File Missing Parts, is being submitted via EFS-Web or by mail directed to Mail Stop Missing Parts, Commissioner for Patents, P.O. Box 1450, Alexandria, VA 22313-1450.

Signature	Date June 20, 2011
Name (Print/Typed) John W. Bailey	Practitioner Registration Number 32,881

Note: *Signatures of all the inventors, § 1.41(b) applicants, or assignees of record of the entire interest or their representative(s), or reexamination requesters at the appeal stage are required in accordance with 37 CFR 1.33 and 11.18. Please see 37 CFR 1.4(d) for the form of the signature. If necessary, submit multiple forms for more than one signature, see below*.*

☐ *Total of _____ forms are submitted.

cmn

Privacy Act Statement

The **Privacy Act of 1974 (P.L. 93-579)** requires that you be given certain information in connection with your submission of the attached form related to a patent application or patent. Accordingly, pursuant to the requirements of the Act, please be advised that: (1) the general authority for the collection of this information is 35 U.S.C. 2(b)(2); (2) furnishing of the information solicited is voluntary; and (3) the principal purpose for which the information is used by the U.S. Patent and Trademark Office is to process and/or examine your submission related to a patent application or patent. If you do not furnish the requested information, the U.S. Patent and Trademark Office may not be able to process and/or examine your submission, which may result in termination of proceedings or abandonment of the application or expiration of the patent.

The information provided by you in this form will be subject to the following routine uses:

1. The information on this form will be treated confidentially to the extent allowed under the Freedom of Information Act (5 U.S.C. 552) and the Privacy Act (5 U.S.C 552a). Records from this system of records may be disclosed to the Department of Justice to determine whether disclosure of these records is required by the Freedom of Information Act.
2. A record from this system of records may be disclosed, as a routine use, in the course of presenting evidence to a court, magistrate, or administrative tribunal, including disclosures to opposing counsel in the course of settlement negotiations.
3. A record in this system of records may be disclosed, as a routine use, to a Member of Congress submitting a request involving an individual, to whom the record pertains, when the individual has requested assistance from the Member with respect to the subject matter of the record.
4. A record in this system of records may be disclosed, as a routine use, to a contractor of the Agency having need for the information in order to perform a contract. Recipients of information shall be required to comply with the requirements of the Privacy Act of 1974, as amended, pursuant to 5 U.S.C. 552a(m).
5. A record related to an International Application filed under the Patent Cooperation Treaty in this system of records may be disclosed, as a routine use, to the International Bureau of the World Intellectual Property Organization, pursuant to the Patent Cooperation Treaty.
6. A record in this system of records may be disclosed, as a routine use, to another federal agency for purposes of National Security review (35 U.S.C. 181) and for review pursuant to the Atomic Energy Act (42 U.S.C. 218(c)).
7. A record from this system of records may be disclosed, as a routine use, to the Administrator, General Services, or his/her designee, during an inspection of records conducted by GSA as part of that agency's responsibility to recommend improvements in records management practices and programs, under authority of 44 U.S.C. 2904 and 2906. Such disclosure shall be made in accordance with the GSA regulations governing inspection of records for this purpose, and any other relevant (*i.e.*, GSA or Commerce) directive. Such disclosure shall not be used to make determinations about individuals.
8. A record from this system of records may be disclosed, as a routine use, to the public after either publication of the application pursuant to 35 U.S.C. 122(b) or issuance of a patent pursuant to 35 U.S.C. 151. Further, a record may be disclosed, subject to the limitations of 37 CFR 1.14, as a routine use, to the public if the record was filed in an application which became abandoned or in which the proceedings were terminated and which application is referenced by either a published application, an application open to public inspection or an issued patent.
9. A record from this system of records may be disclosed, as a routine use, to a Federal, State, or local law enforcement agency, if the USPTO becomes aware of a violation or potential violation of law or regulation.

UNITED STATES PATENT AND TRADEMARK OFFICE

Commissioner for Patents
United States Patent and Trademark Office
P.O. Box 1450
Alexandria, VA 22313-1450
www.uspto.gov

BIRCH STEWART KOLASCH & BIRCH
PO BOX 747
FALLS CHURCH VA 22040-0747

MAILED
JUN 23 2011
OFFICE OF PETITIONS

In re Application of	:	
Gunji et al.	:	
Application No. 11/919,180	:	DECISION ON PETITION
Filed: March 5, 2008	:	
Attorney Docket No. 0445-0385PUS1	:	

This is a decision on the request filed June 20, 2011, seeking relief under the provisions of "Relief Available to Patent and Trademark Applicants, Patentees and Trademark Owners Affected by the Catastrophic Events of March 11, 2011 in Japan," 1365 Off. Gaz. Pat. Office 170 (April 19, 2011).

The request for relief is **GRANTED**.

In the above-identified application, an Office action was mailed on February 18, 2011. The instant petition was filed prior to the expiration of the period for reply and the certifications for granting of relief are considered to be met by the submission of the request.

Telephone inquires concerning this decision should be directed to the undersigned at 571-272-7751. All other inquires concerning either the examination or status of the application should be directed to the Technology Center.

This application is being referred to the Technology Center, Art Unit 1786 for re-mailing the Office action of February 18, 2011. The period for reply will run from the mailing date of the Office action.

/Joan Olszewski/
Joan Olszewski
Petitions Examiner
Office of Petitions

Doc Code: PET.RELIEF
Document Description: Certification and Request for Disaster Relief

PTO/SB/425 (03-11)

CERTIFICATION AND REQUEST FOR RELIEF DUE TO EVENTS OF MARCH 11, 2011, IN JAPAN (Page 1 of 2)

Nonprovisional Application Number or Control Number (if applicable): 11/919,238	Patent Number (if applicable):
First Named Inventor: Takayuki KOJIMA	Title of Invention: CANDY AND PROCESS FOR PRODUCING THE SAME

APPLICANT/PATENTEE/REEXAMINATION PARTY HEREBY CERTIFIES AND REQUESTS THE FOLLOWING FOR THE ABOVE-IDENTIFIED APPLICATION/PATENT/REEXAMINATION PROCEEDING.

1. FOR PATENT APPLICATIONS AND REEXAMINATION PROCEEDINGS PENDING IN THE USPTO AS OF MARCH 11, 2011, IN WHICH A COMMUNICATION FROM THE USPTO IS SOUGHT TO BE REMAILED:

   a. One or more inventors, an assignee, or a correspondence address (for the application/proceeding) is in an area of Japan affected by the earthquake and/or tsunami of March 11, 2011.

   b. A reply or response to an Office action (final, non-final, or other), a notice of allowance, or other Office notice (hereinafter collectively referred to as “Office communication”) is outstanding on March 11, 2011.

   c. The statutory or non-statutory time period set for response has not yet expired.

   d. Withdrawal and reissuance of the Office communication is requested.

   e. It is acknowledged that if this request is not made within sufficient time so that withdrawal and reissuance of the Office communication occur prior to expiration of the statutory or non-statutory time period (as permitted to be extended under 37 CFR 1.136(a), or as extended under 37 CFR 1.550(c) or 1.956), this request may not be granted.

   f. The need for the reissuance of the Office communication was due to the effects of the earthquake and/or tsunami of March 11, 2011.

   g. This request is being sent via EFS-Web or by mail directed to Mail Stop Petition, Commissioner for Patents, P.O. Box 1450, Alexandria, VA 22313-1450.

2. FOR PATENTEES WHO WERE UNABLE TO TIMELY PAY A PATENT MAINTENANCE FEE DURING THE SIX-MONTH GRACE PERIOD FOLLOWING THE WINDOW TO PAY THE MAINTENANCE FEE:

   a. The original window of time to pay the maintenance fee without the surcharge required by 37 CFR 1.20(h) expired on or after March 11, 2011.

   b. The delay in paying the fee was due to the effects of the earthquake and/or tsunami of March 11, 2011.

   c. The USPTO is requested to *sua sponte* waive the surcharge in 37 CFR 1.20(h) for paying a maintenance fee during the six-month grace period following the window to pay the maintenance fee.

   d. This request and payment of the maintenance fee during the six-month grace period following the window to pay the maintenance fee is being mailed to: Director of the United States Patent and Trademark Office, Attn: Maintenance Fee, 2051 Jamieson Avenue, Suite 300, Alexandria, VA 22314; or being transmitted via facsimile to: 571-273-6500.

CERTIFICATION AND REQUEST FOR RELIEF DUE TO EVENTS OF MARCH 11, 2011, IN JAPAN (Page 2 of 2)

3. FOR PATENTEES WHO NEED TO FILE A PETITION TO ACCEPT A DELAYED MAINTENANCE FEE PAYMENT UNDER 37 CFR 1.378(c):
   a. The maintenance fee payment was required to have been paid after March 10, 2011.
   b. A petition under 37 CFR 1.378(c) (using USPTO form PTO/SB/66 – Petition to Accept Unintentionally Delayed Payment of Maintenance Fee in an Expired Patent (37 CFR 1.378(c))) is being promptly filed accompanied by the applicable maintenance fee payment (but not the surcharge under 37 CFR 1.20(i)).
   c. The delay in payment of the maintenance fee was due to the effects of the earthquake and/or tsunami of March 11, 2011.
   d. The USPTO is requested to *sua sponte* waive the surcharge in 37 CFR 1.20(i) for accepting a delayed maintenance fee payment.
   e. It is acknowledged that the petition to accept a delayed maintenance fee payment under 37 CFR 1.378(c) must be filed by March 11, 2012, in order to be entitled to a waiver of the surcharge under 37 CFR 1.20(i).
   f. It is acknowledged that the petition to accept a delayed maintenance fee payment under 37 CFR 1.378(c) must be filed within twenty-four months from the expiration date of the patent. *See* 35 U.S.C 41(c).
   g. This request and the petition to accept a delayed maintenance fee payment under 37 CFR 1.378(c) is being submitted via EFS-Web or by mail directed to Mail Stop Petition, Commissioner for Patents, P.O. Box 1450, Alexandria, VA 22313-1450.
4. FOR NONPROVISIONAL PATENT APPLICATIONS FILED WITHOUT AN EXECUTED OATH OR DECLARATION OR PAYMENT OF THE BASIC FILING FEE, SEARCH FEE, AND/OR EXAMINATION FEE:
   a. The nonprovisional patent application was filed on or after March 11, 2011, and prior to April 12, 2011.
   b. The late filing of the oath or declaration or the basic filing fee, search fee, or examination fee was due to the effects of the earthquake and/or tsunami of March 11, 2011.
   c. The USPTO is requested to *sua sponte* waive the surcharge set forth in 37 CFR 1.16(f) for the late filing of the oath or declaration or basic filing fee, search fee, and/or examination fee.
   d. This request, together with the executed oath or declaration or the basic filing fee, search fee, or examination fee, as well as the reply to the Notice to File Missing Parts, is being submitted via EFS-Web or by mail directed to Mail Stop Missing Parts, Commissioner for Patents, P.O. Box 1450, Alexandria, VA 22313-1450.

Signature /Robert A. Madsen/	Date April 11, 2011
Name (Print/Typed) Robert A. Madsen	Practitioner Registration Number 58,543

***Note**: Signatures of all the inventors, § 1.41(b) applicants, or assignees of record of the entire interest or their representative(s), or reexamination requesters at the appeal stage are required in accordance with 37 CFR 1.33 and 11.18. Please see 37 CFR 1.4(d) for the form of the signature. If necessary, submit multiple forms for more than one signature, see below*.*

☐ *Total of 1 forms are submitted.

Privacy Act Statement

The **Privacy Act of 1974 (P.L. 93-579)** requires that you be given certain information in connection with your submission of the attached form related to a patent application or patent. Accordingly, pursuant to the requirements of the Act, please be advised that: (1) the general authority for the collection of this information is 35 U.S.C. 2(b)(2); (2) furnishing of the information solicited is voluntary; and (3) the principal purpose for which the information is used by the U.S. Patent and Trademark Office is to process and/or examine your submission related to a patent application or patent. If you do not furnish the requested information, the U.S. Patent and Trademark Office may not be able to process and/or examine your submission, which may result in termination of proceedings or abandonment of the application or expiration of the patent.

The information provided by you in this form will be subject to the following routine uses:

1. The information on this form will be treated confidentially to the extent allowed under the Freedom of Information Act (5 U.S.C. 552) and the Privacy Act (5 U.S.C 552a). Records from this system of records may be disclosed to the Department of Justice to determine whether disclosure of these records is required by the Freedom of Information Act.
2. A record from this system of records may be disclosed, as a routine use, in the course of presenting evidence to a court, magistrate, or administrative tribunal, including disclosures to opposing counsel in the course of settlement negotiations.
3. A record in this system of records may be disclosed, as a routine use, to a Member of Congress submitting a request involving an individual, to whom the record pertains, when the individual has requested assistance from the Member with respect to the subject matter of the record.
4. A record in this system of records may be disclosed, as a routine use, to a contractor of the Agency having need for the information in order to perform a contract. Recipients of information shall be required to comply with the requirements of the Privacy Act of 1974, as amended, pursuant to 5 U.S.C. 552a(m).
5. A record related to an International Application filed under the Patent Cooperation Treaty in this system of records may be disclosed, as a routine use, to the International Bureau of the World Intellectual Property Organization, pursuant to the Patent Cooperation Treaty.
6. A record in this system of records may be disclosed, as a routine use, to another federal agency for purposes of National Security review (35 U.S.C. 181) and for review pursuant to the Atomic Energy Act (42 U.S.C. 218(c)).
7. A record from this system of records may be disclosed, as a routine use, to the Administrator, General Services, or his/her designee, during an inspection of records conducted by GSA as part of that agency's responsibility to recommend improvements in records management practices and programs, under authority of 44 U.S.C. 2904 and 2906. Such disclosure shall be made in accordance with the GSA regulations governing inspection of records for this purpose, and any other relevant (*i.e.*, GSA or Commerce) directive. Such disclosure shall not be used to make determinations about individuals.
8. A record from this system of records may be disclosed, as a routine use, to the public after either publication of the application pursuant to 35 U.S.C. 122(b) or issuance of a patent pursuant to 35 U.S.C. 151. Further, a record may be disclosed, subject to the limitations of 37 CFR 1.14, as a routine use, to the public if the record was filed in an application which became abandoned or in which the proceedings were terminated and which application is referenced by either a published application, an application open to public inspection or an issued patent.
9. A record from this system of records may be disclosed, as a routine use, to a Federal, State, or local law enforcement agency, if the USPTO becomes aware of a violation or potential violation of law or regulation.

UNITED STATES PATENT AND TRADEMARK OFFICE

Commissioner for Patents
United States Patent and Trademark Office
P.O. Box 1450
Alexandria, VA 22313-1450
www.uspto.gov

YOUNG & THOMPSON
209 MADISON STREET
SUITE 500
ALEXANDRIA VA 22314

MAILED
APR 15 2011
OFFICE OF PETITIONS

In re Application of	:	
Kojima et al.	:	
Application No. 11/919,238	:	DECISION ON PETITION
Filed: November 6, 2007	:	
Attorney Docket No. 8013-1272	:	

This is a decision on the request filed April 11, 2011, seeking relief under the provisions of an announcement by the Under Secretary and Director of the United States Patent and Trademark Office on March 17, 2011, http://www.uspto.gov/patents/announce/japan_relief_2011mar17.pdf, providing relief to inventors and patent owners in areas affected by the earthquake and resulting tsunami of March 11, 2011.

The request for relief is **GRANTED**.

In the above-identified application, an Office action was mailed on January 10, 2011. The instant petition was filed prior to the expiration of the period for reply and the certifications for granting of relief are considered to be met by the submission of the request.

Telephone inquires concerning this decision should be directed to the undersigned at 571-272-7751. All other inquires concerning either the examination or status of the application should be directed to the Technology Center.

This application is being referred to the Technology Center, Art Unit 1789 for re-mailing the Office action of January 10, 2011. The period for reply will run from the mailing date of the Office action.

/Joan Olszewski/
Joan Olszewski
Petitions Examiner
Office of Petitions

UNITED STATES PATENT AND TRADEMARK OFFICE

UNITED STATES DEPARTMENT OF COMMERCE
United States Patent and Trademark Office
Address: COMMISSIONER FOR PATENTS
P.O. Box 1450
Alexandria, Virginia 22313-1450
www.uspto.gov

APPLICATION NO.	FILING DATE	FIRST NAMED INVENTOR	ATTORNEY DOCKET NO.	CONFIRMATION NO.
11/919,258	10/25/2007	Alois Jungbauer	4518-0119PUS1	1877

2292 7590 05/31/2011
BIRCH STEWART KOLASCH & BIRCH
PO BOX 747
FALLS CHURCH, VA 22040-0747

EXAMINER
AUDET, MAURY A

ART UNIT	PAPER NUMBER
1654	

NOTIFICATION DATE	DELIVERY MODE
05/31/2011	ELECTRONIC

Please find below and/or attached an Office communication concerning this application or proceeding.

The time period for reply, if any, is set in the attached communication.

Notice of the Office communication was sent electronically on above-indicated "Notification Date" to the following e-mail address(es):

mailroom@bskb.com

UNITED STATES PATENT AND TRADEMARK OFFICE

Commissioner for Patents
United States Patent and Trademark Office
P.O. Box 1450
Alexandria, VA 22313-1450
www.uspto.gov

MAY 3 1 2011

Leonard R. Svensson
BIRCH STEWART KOLASCH & BIRCH
PO BOX 747
FALLS CHURCH VA 22040-0747

In re Application of	:
Jungbauer et al	:Decision on Petition
Serial No.:11/919,258	:
Filed: 25 October 2007	:
Attorney Docket No.:4528-0119PUS1	:

This letter is in response to the Petition filed under 37 C.F.R. 1.144 and 1.181 to request reconsideration of the restriction requirement mailed 23 June 2010.

BACKGROUND AND DISCUSSION

Applicants request reconsideration of the restriction requirement. On 7 April 2011, the examiner prepared an interview summary in which the examiner discussed an amended restriction requirement election to which the examiner is amendable to searching/examining. The examiner then prepared an Office action agreeing to search all the SEQ ID Nos corresponding to the peptide of AFXXXYA(X).

DECISION

Accordingly, the petition under 37 CFR 1.144 and 1.181 is **DISMISSED**.

Should there be any questions regarding this decision, please contact Quality Assurance Specialist Julie Burke, by mail addressed to Director, Technology Center 1600, PO BOX 1450, ALEXANDRIA, VA 22313-1450, or by telephone at (571) 272-0512 or by Official Fax at 571-273-8300.

Jacqueline Stone
Director, Technology Center 1600

UNITED STATES PATENT AND TRADEMARK OFFICE

Commissioner for Patents
United States Patent and Trademark Office
P.O. Box 1450
Alexandria, VA 22313-1450
www.uspto.go

TRASKBRITT, P.C.
P.O. BOX 2550
SALT LAKE CITY, UT 84110

MAILED
SEP 23 2011
OFFICE OF PETITIONS

Applicant: Throsby, et al.
Appl. No.: 11/919,265
International Filing Date: May 11, 2006
Title: HOSY CELL SPECIFIC BINDING MOLECULES CAPABLE OF NEUTRALIZING VIRUSES AND USES THEREOF
Attorney Docket: 2578-867US
Pub. No.: US 2010/0303801 A1
Pub. Date: December 2, 2010

This is a decision on the request for a corrected patent application publication under 37 CFR 1.221(b), received on January 4, 2011, for the above-identified application.

The request is DISMISSED.

Applicant requests that the application be republished because the patent application publication contains material errors wherein the preliminary amendment filed with the application on October 24, 2007, was not included in the publication.

37 CFR 1.221 (b) is applicable "only when the Office makes a material mistake which is apparent from Office records.... Any request for a corrected publication or revised patent application publication other than provided as provided in paragraph (a) of this section must be filed within two months from the date of the patent application publication. This period is not extendable." A material mistake must affect the public's ability to appreciate the technical disclosure of the patent application publication, to determine the scope of the patent application publication, or to determine the scope of the provisional rights that an applicant may seek to enforce upon issuance of a patent. [1]

The error noted by requestor with respect to the preliminary amendment is <u>not</u> an Office error. The patent application publication does not include a mistake regarding the failure to include the preliminary amendment to the specification because patent application publications are not required to include preliminary amendments. See 37 CFR 1.215(a). The "failure to include an amendment is not an Office error." See MPEP 1130(b). The publication accurately reflected the specification as filed. While a patent application publication of an application that has entered

[1] Changes to Implement Eighteen-Month Publication of Patent Applications, 65 FR 57023, 57038 (Sept. 20, 2000), 1239, Off. Gaz. Pat. Office Notices 63, 75 (Oct. 10, 2000) (final rule).

the national stage under 35 U.S.C. 371 may also include amendments made during the international stage, such as: amendments under Article 34 and 19; rectifications; corrections of physical defects under PCT Rule 26; and an abstract rewritten by the International Searching Authority, the Office is not required to use the amendments.

37 C.F.R. 1.215(a) states that the patent application publication may also be based upon amendments to the specification (other than the abstract or the claims) that are reflected in a substitute specification under § 1.125(b), amendments to the abstract under § 1.121(b), amendments to the claims that are reflected in a complete claim listing under § 1.121(c), and amendments to the drawings under §1.121(d), provided that such substitute specification or amendment is submitted in sufficient time to be entered into the Office file wrapper of the application before technical preparations for publication of the application have begun. (emphasis added) 37 CFR 1.215(c) states that applicant may file an amended copy of the application for publication purposes, but such amendments, including a substitute specification, must be submitted in compliance with the Office electronic filing system requirements, and within one month of the mailing date of the first Office communication that includes a confirmation number for the application, or fourteen months of the earliest filing date for which a benefit is sought under title 35, United States Code, whichever is later.

Applicant is reminded of his duty to conduct a reasonable inquiry before filing a paper before the Office. See MPEP 410.

Applicants' request for a corrected patent application publication on January 4, 2011, may constitute a "failure to engage in reasonable efforts to conclude processing or examination of the application." See 1.704(c). This determination will be made on or after a mailing of a Notice of Allowance.

It would greatly benefit the Office if **applicant did not provide copies of papers**, which were previously submitted and/or **a complete copy of the pre-grant publication**, as it unnecessarily increases the cost to the Office. See 37 CFR 1.4(b). A request for corrected publication need only point out what was printed incorrectly in the application, where the error occurs in the publication and where the correct text or drawing is found in the application papers. Marked up relevant copies of the applications papers and the pre-grant publication may facilitate processing of the request, where it is not readily apparent where the error occurs. If it is not clear why the error is a material error, further explanation may be warranted.

The applicant is advised that a "request for republication of an application previously published" may be filed under 37 CFR 1.221 (a). Such a request for republication "must include a copy of the application compliance with the Office's electronic filing system requirements and be accompanied by the publication fee set forth in § 1.18 (d) and the processing fee set forth in § 1.17 (i)." If the request for republication does not comply with the electronic filing system requirements, the republication will not take place and the publication fee set forth in § 1.18 (d) will be refunded. The processing fee will be retained.

A guide for filing a request for a Pre-Grant Publication, such as a request for republication, may be found on the link below:

http://www.uspto.gov/patents/process/file/efs/guidance/index.jsp
OR
http://www.uspto.gov/ebc/portal/efs/pgpub_quickstart.pdf

Any request for republication under 37 CFR 1.221(a), must be submitted via the EFS system, as a "Pre-Grant Publication".

Inquiries relating to this matter may be directed to Mark Polutta at (571) 272-7709.

Mark Polutta
Senior Legal Advisor
Office of Patent Legal Administration
Office of the Deputy Commissioner
for Patent Examination Policy

UNITED STATES PATENT AND TRADEMARK OFFICE

25 AUG 2010

Commissioner for Patents
United States Patent and Trademark Office
P.O. Box 1450
Alexandria, VA 22313-1450
www.uspto.gov

SEED INTELLECTUAL PROPERTY LAW GROUP PLLC
701 FIFTH AVENUE, SUITE 5400
SEATTLE WA 98104-7092

In re Application of:	:	
HUNTER, William, L., et al.	:	DECISION ON REFUND
U.S. Application No.: 11/919,274	:	REQUEST
PCT No.: PCT/US2006/011610	:	
International Filing Date: 31 March 2006	:	
Priority Date: 10 May 2005	:	
Attorney Docket No.: 110129.454USPC	:	
For: ELECTRICAL DEVICES, ANTI-	:	
SCARRING AGENTS, AND	:	
THERAPEUTIC COMPOSITIONS	:	

This decision is issued in response to the "Request For Refund" filed 11 September 2009. No petition fee is required.

BACKGROUND

On 31 March 2006, applicants filed international application PCT/US2006/011610. The international application claimed a priority date of 10 May 2005, and it designated the United States. The deadline for submission of the basic national fee was thirty months from the priority date, i.e., 10 November 2007.

On 24 October 2007, applicants filed a Transmittal Letter requesting entry into the national stage in the United States. The transmittal letter indicated that a check in the amount of $750 was included as payment for the following itemized fees: $310 basic national fee, $210 examination fee, $100 search fee, and $130 surcharge payment. The Transmittal Letter also included two separate Deposit Account authorizations. The first authorized the USPTO to "charge any additional fee which may be required, or credit any overpayment to Deposit Account No. 19-1090." The second read as follows:

> If there is a deficiency in the basic national fee, the Commissioner is authorized to charge such deficiency to Deposit Account No. 19-1090. ... This is **not** a general authorization to charge the Deposit Account for any extra claim, examination, search, or extra sheet fees.

Pursuant to the general fee authorization contained in applicants' transmittal letter, applicants were subsequently charged the following additional fees: $370 as the fee for inclusion of a multiple dependent claim, $210 as the fee for inclusion of an additional independent claim, $4,050 as the fee for inclusion of additional claims in excess of twenty, and $9,620 as the extra sheet fee, based on the size of the application as filed.

On 09 July 2009, applicants filed an executed declaration.

On 06 August 2009, the United States Designated/Elected Office (DO/EO/US) mailed a "Notification Of Acceptance" (Form PCT/DO/EO/903) indicating that the requirements of 35 U.S.C. 371(c) were satisfied as of 09 July 2009.

On 11 September 2009, applicants filed the "Request For Refund" considered herein, requesting a refund of the $14,250 in additional fees charged to Deposit Account No. 19-1090..

On 16 July 2010, the USPTO issued correspondence indicating that applicants' refund request was denied.

DISCUSSION

The present refund request does not assert that the $14,250 in fees charged to applicant's Deposit Account were improperly calculated or that the materials filed herein did not include the authorization to charge applicants' Deposit Account for all required fees. Rather, applicant asserts that, despite the authorization to charge all required fees included in applicants' submission, applicants "intended to give limited authorization only."

The present record is insufficient to demonstrate that the authorization to charge applicants' Deposit Account "any additional fees required" included by applicants with the national stage materials filed on 24 October 2007 was submitted "by mistake or in excess of that required," as necessary for a grantable refund request under 37 CFR 1.26(a). Had any specific fees been required to avoid abandonment, the Office would have been obligated under applicants' general authorization to charge such fee and thereby prevent abandonment. Having obtained the protection from abandonment provided by the general authorization, applicants cannot now assert that the Office could not apply such authorization to charge applicants for required fees, as was done herein. Accordingly, on the present record, applicants' refund request is appropriately dismissed.

It is noted that applicants did not submit upon filing an amendment reducing the number of claims contained in the present application. See MPEP section 1893.01(c) (emphasis added):

> A preliminary amendment accompanying the initial national stage submission under 35 U.SC. 371 that cancels claims and/or eliminates multiple dependent claims will be effective to reduce the number of claims to be considered in calculating extra claim fees required under 37 CFR 1.492(d)-(e) and/or eliminate the multiple dependent claim fee required under 37 CFR 1.492(f). **A subsequently filed amendment canceling claims and/or eliminating multiple dependent claims will not entitle applicant to a refund of fees previously paid.**

It is also noted that the application size fee for a national stage application is based on the size of the published international application, and may not be reduced by amending the national stage application. See MPEP section 1893.01(c) (emphasis added):

> **The application size fee for a national stage application (37 CFR 1.492 (j)) is determined on the basis of the international application as published by WIPO pursuant to PCT Article 21.** Specifically, the application size fee is calculated on the basis of the number of sheets of description, claims, drawings, and abstract present in the published international application. This calculation is made without regard to the language of publication. Certain other sheets typically present in the international publication are not taken into account in determining the application size fee, i.e., Article 19 amendments, the international search report, and any additional bibliographic sheets (other than the cover sheet containing the abstract). **Nor are Article 34 amendments or preliminary amendments taken into account in determining the application size fee.**

Thus, payment of the $9,620 application size fee which applicants were charged (and for which applicants currently seek a refund) is necessary for the present national stage application to proceed. Even had applicants not included the general authorization to charge fees with the national stage papers, payment of this full fee would have been required herein, and the amount of such fee would not have been subject to reduction based on any subsequent amendment of the application.

CONCLUSION

For the reasons discussed above, the "Request For Refund" filed 11 September 2009 is **DISMISSED** without prejudice.

Any request for reconsideration on the merits of this decision must be filed within **TWO (2) MONTHS** from the mailing date of this decision, indicated above. Any such request should include a cover sheet entitled "Renewed Refund Request" and must include a proper showing that the fees charged to applicants' Deposit Account herein were not appropriately authorized or calculated.

Any further correspondence with respect to this matter may be filed electronically via EFS-Web selecting the document description "Petition for review and processing by the PCT Legal Office" or by mail addressed to Mail Stop PCT, Commissioner for Patents, Office of PCT Legal Administration, P.O. Box 1450, Alexandria, Virginia 22313-1450, with the contents of the letter marked to the attention of the Office of PCT Legal Administration.

Richard M. Ross
Attorney Advisor
Office of PCT Legal Administration
Telephone: (571) 272-3296
Facsimile: (571) 273-0459

UNITED STATES PATENT AND TRADEMARK OFFICE

Commissioner for Patents
United States Patent and Trademark Office
P.O. Box 1450
Alexandria, VA 22313-1450
www.uspto.gov

MAILED

20 DEC 2010

PCT LEGAL ADMINISTRATION

SEED INTELLECTUAL PROPERTY LAW GROUP PLLC
701 FIFTH AVENUE, SUITE 5400
SEATTLE WA 98104-7092

In re Application of:
HUNTER, William, L., et al.
U.S. Application No.: 11/919,274
PCT No.: PCT/US2006/011610
International Filing Date: 31 March 2006
Priority Date: 10 May 2005
Attorney Docket No.: 110129.454USPC
For: ELECTRICAL DEVICES, ANTI-SCARRING AGENTS, AND THERAPEUTIC COMPOSITIONS

DECISION ON RENEWED REFUND REQUEST

This decision is issued in response to the "Request For Reconsideration And Renewed Request For Refund" filed 19 October 2010.

BACKGROUND

The procedural background for the present application was set forth in the decision mailed 25 August 2010. The decision dismissed without prejudice applicant's request for a refund herein, finding that applicants' had authorized the USPTO to charge Deposit Account No. 19-1090 for "any additional fees which may be required."

On 19 October 2010, applicants filed the "Request For Reconsideration And Renewed Request For Refund" considered herein.

DISCUSSION

The renewed refund request does not include a showing that the fees charged to applicants' Deposit Account herein were not appropriately authorized or calculated, as required for a grantable refund request under 37 CFR 1.26. Rather, applicants' arguments are premised on the assertions that the general authorization to charge applicants' Deposit Account for all required fees was inadvertently submitted as the result of a clerical error and was not required to avoid abandonment. Applicants therefore argue that the Office should disregard the general authorization to charge applicants' Deposit Account for all required fees and refund the charges made pursuant to such authorization, even though such charges are appropriate and required for the national stage application as filed. However, the purportedly inadvertent submission of payment of the appropriate fees for a given application is not considered payment "by mistake or in excess" as required for a grantable request for refund under 37 CFR 1.26. Note that 37 CFR 1.26 specifically states that a "change of purpose after the payment of a fee, such as when a party

desires to withdraw a patent filing for which the fee was paid ... will not entitle a party to a refund of such fee."

The arguments made by applicants herein are more appropriately considered in the context of a petition filed under 37 CFR 1.182, not a request for refund under 37 CFR 1.26. A petition under 37 CFR 1.182 is the appropriate mechanism in circumstances where, as here, applicants are requesting correction of their own inadvertent but otherwise appropriate submission (in the present case, the submission of the general authorization to charge all required fees). Any petition under 37 CFR 1.182 filed by applicants must be accompanied by the appropriate petition $400 fee and an acceptable showing that, under the circumstances present here, it is appropriate for the Office to treat the materials filed by applicants on 24 October 2007 to initiate the present application as if such submission did not include the authorization to charge applicants' Deposit Account for all required fees.

CONCLUSION

For the reasons discussed above, the "Request For Reconsideration And Renewed Request For Refund" filed 19 October 2010 is **DISMISSED** without prejudice.

Any request for reconsideration on the merits of this decision must be filed within **TWO (2) MONTHS** from the mailing date of this decision, indicated above. Any such request must include either a proper showing that the fees charged to applicants' Deposit Account herein were not appropriately authorized or calculated or, in the alternative, a petition under 37 CFR 1.182 (with applicable petition fee), as discussed above.

Any further correspondence with respect to this matter may be filed electronically via EFS-Web selecting the document description "Petition for review and processing by the PCT Legal Office" or by mail addressed to Mail Stop PCT, Commissioner for Patents, Office of PCT Legal Administration, P.O. Box 1450, Alexandria, Virginia 22313-1450, with the contents of the letter marked to the attention of the Office of PCT Legal Administration.

/RichardMRoss/

Richard M. Ross
Attorney Advisor
Office of PCT Legal Administration
Telephone: (571) 272-3296
Facsimile: (571) 273-0459

UNITED STATES PATENT AND TRADEMARK OFFICE

Commissioner for Patents
United States Patent and Trademark Office
P.O. Box 1450
Alexandria, VA 22313-1450
www.uspto.gov

COHEN PONTANI LIEBERMAN & PAVANE LLP
551 FIFTH AVENUE
SUITE 1210
NEW YORK NY 10176

MAILED

JUN 20 2011

OFFICE OF PETITIONS

In re Patent No. 7,804,237	:	
Issue Date: September 28, 2010	:	
Application No. 11/919,296	:	DECISION ON PETITION
Filed: October 25, 2007	:	
Attorney Docket No. 502902-291PUS	:	

This is a decision on the petition under 37 CFR 3.81(b), filed May 11, 2011.

The petition is **GRANTED**.

An application may issue in the name of an assignee rather than the applicant if requested prior to issuance of a patent.[1] However, in the event the request is not made prior to issuance, a Certificate of Correction under 37 CFR 1.323 may be requested. A request for a Certificate of Correction under 37 CFR 1.323 to correct the assignee's name will not be granted unless a petition under 37 CFR 3.81(b) is granted. Such request under 37 CFR 3.81(b) should include:

(A) the processing fee required by 37 CFR 1.17(i);

(B) a request for issuance of the application in the name of the assignee, or a request that a patent be corrected to state the name of the assignee;

---

[1] See 37 CFR 3.81.

(C) a statement that the assignment was submitted for recordation as set forth in 37 CFR 3.11 before issuance of the patent; and

(D) a request for a certificate of correction under 37 CFR 1.323 accompanied by the fee set forth in 37 CFR 1.20(a).[2]

Receipt of the $130 processing fee and $100 fee for the Certificate of Correction is acknowledged.

The file is being forwarded to the Certificate of Corrections Branch for issuance of the requested Certificate of Correction.

Telephone inquiries related to this decision should be directed to the undersigned at (571)272-3207.

Cliff Congo
Petitions Attorney
Office of Petitions

[2] MPEP 307.

UNITED STATES PATENT AND TRADEMARK OFFICE

UNITED STATES DEPARTMENT OF COMMERCE
United States Patent and Trademark Office
Address: COMMISSIONER FOR PATENTS
P.O. Box 1450
Alexandria, Virginia 22313-1450
www.uspto.gov

APPLICATION NO.	FILING DATE	FIRST NAMED INVENTOR	ATTORNEY DOCKET NO.	CONFIRMATION NO.
11/919,354	11/19/2008	Patrick L. Blott	SMNPH.016APC	3510

20995 7590 03/26/2012
KNOBBE MARTENS OLSON & BEAR LLP
2040 MAIN STREET
FOURTEENTH FLOOR
IRVINE, CA 92614

EXAMINER
CARPENTER, WILLIAM R

ART UNIT	PAPER NUMBER
3767	

NOTIFICATION DATE	DELIVERY MODE
03/26/2012	ELECTRONIC

Please find below and/or attached an Office communication concerning this application or proceeding.

The time period for reply, if any, is set in the attached communication.

Notice of the Office communication was sent electronically on above-indicated "Notification Date" to the following e-mail address(es):

jcartee@kmob.com
efiling@kmob.com
eOAPilot@kmob.com

UNITED STATES PATENT AND TRADEMARK OFFICE

Commissioner for Patents
United States Patent and Trademark Office
P.O. Box 1450
Alexandria, VA 22313-1450
www.uspto.gov

KNOBBE MARTENS OLSON & BEAR LLP
2040 MAIN STREET
FOURTEENTH FLOOR
IRVINE CA 92614

In re Application of:
BLOTT, PATRICK L. et al
Serial No. 11/919,354
Filed: Nov. 19, 2008
Docket: SMNPH.016APC
Title: WOUND TREATMENT APPARATUS AND METHOD

DECISION ON PETITION UNDER 37 CFR 1.59

This is a decision on the petition and request under 37 CFR 1.59(b), filed August 16, 2010 to expunge information from the above identified application. The petition fee of $200.00 set forth in 37 CFR 1.17(g) has been paid.

In the petition, the petitioner states that a non-patent literature documents identified as citations 1, 2 and 3 (Chinese Patent Office action issued on August 21, 2009; March 1, 2010 and July 9, 2010) filed with the Information Disclosure Statement on August 9, 2010 containing attorney client privileged information were filed inadvertently. Petitioner requests removal of this information of the NPL inadvertently filed with the IDS.

The petition is **granted**.

The USPTO does not remove any papers filed in an application. However, since the applicant has unintentionally filed the information on August 8, 2010, the non-patent literature documents have been blocked from public view in the Public Pair system.

Any inquiry regarding this decision should be directed to Henry C. Yuen, Special Programs Examiner, at (571) 272-4856.

PETITION GRANTED

Angela D. Sykes for

Donald T. Hajec, Director
Technology Center 3700

United States Patent and Trademark Office

Commissioner for Patents
United States Patent and Trademark Office
P.O. Box 1450
Alexandria, VA 22313-1450
www.uspto.gov

MAILED

FEB 25 2011

PCT LEGAL ADMINISTRATION

PAULEY PETERSEN & ERICKSON
2800 WEST HIGGINS ROAD
SUITE 365
HOFFMAN ESTATES IL 60169

In re Application of	:	
Osipova et al.	:	
Application No.: 11/919,356	:	DECISION
PCT No.: PCT/RU2005/000231	:	
Int. Filing Date: 28 April 2005	:	ON
Priority Date: 28 April 2005	:	
Attorney Docket No.: VO-808	:	PETITION
For: Iirilis Biopreparation Based On Bacillus-Strain Bacteria, Bacillus Subtilis And Bacillus Lichen...	:	

This is in response to the renewed petition under 37 CFR 1.47(a) filed on 22 December 2010.

DISCUSSION

In a Decision mailed on 05 November 2010, the renewed petition under 37 CFR 1.47(a) filed on 01 September 2010 was dismissed, without prejudice, because

> Ms. Vasilieva also indicates that, on 11 May 2010, she sent a copy of the application and a declaration to Ms. Sorokulova via email on 11 May 2010. Ms. Vasilieva implies, in effect, that Ms. Sorokulova's failure to return an executed declaration in response to this email should be construed as a refusal within the meaning of 37 CFR 1.47(a). However, it is unclear whether the email ever actually reached the inventor, since no "read receipt" has been provided. It would be appropriate to send a physical copy of the application and declaration to the inventor's last-known address to ensure that any refusal, actual or constructive, is made after having been presented with a copy of the application.

In response, petitioner has provided an "Additional Statement of Facts..." signed by Ms. Vasilieva on 12 December 2010, stating (in part) that

> The undersigned then, on 26 June 2010, mailed to Irina Borisovna SOROKULOVA at the last known address listed above, a complete copy of the filed National Phase U.S. Patent Application, along with a copy of the Russian Language Declaration and a copy of a letter from U.S. attorneys Pauley Petersen and Erickson dated 29 March 2010, requesting that Irina Borisovna SOROKULOVA execute the Russian Language Declaration. A copy of the mailed documents and a Russian Post receipt dated 26 June 2010 are enclosed. As of the execution of this Statement of Facts, Irina Borisovna SOROKULOVA has not replied in any manner to the undersigned's request.

Based on the totality of the evidence now of record, it be appropriate to construe Ms. Sorokulova's failure to return a signed declaration as a "refusal" within the meaning of 37 CFR 1.47(a). As such, all of the requirements of 37 CFR 1.47(a) now have been satisfied.

DECISION

The petition under 37 CFR 1.47(a) is **GRANTED**,.

As provided in 37 CFR 1.47(a), a notice of the filing of this application will be forwarded to each non-signing inventor at her last known address of record.

A notice of the filing of the application under 37 CFR 1.47(a) will be published in the Official Gazette.

This application is being returned to the Office of Patent Application Processing. Its date under 35 U.S.C. 371(c)(1), (2) and (4) is **08 December 2009**.

/George Dombroske/
George Dombroske
PCT Legal Examiner
Office of PCT Legal Administration
Tel: (571) 272-3283
Fax: (571) 273-0459

United States Patent and Trademark Office

Commissioner for Patents
United States Patent and Trademark Office
P.O. Box 1450
Alexandria, VA 22313-1450
www.uspto.gov

MAILED

FEB 25 2011

PCT LEGAL ADMINISTRATION

Irina Grigorievna OSIPOVA
Leningradskoe shosse, 21-103
RU-125171 Moscow
RUSSIA

In re Application of
Osipova et al.
Application No.: 11/919,356
PCT No.: PCT/RU2005/000231
Int. Filing Date: 28 April 2005
Priority Date: 28 April 2005
Attorney Docket No.: VO-808
For: Iirilis Biopreparation Based On Bacillus-Strain Bacteria, Bacillus Subtilis And Bacillus Lichen...

Dear Ms. Osipova
:

You are named as a joint inventor in the above identified United States patent application, filed under the provisions of 35 U.S.C. 116 (United States Code), and 37 CFR 1.47(a), Rules of Practice in Patent Cases. Should a patent be granted on the application you will be designated therein as a joint inventor.

As a named inventor you are entitled to inspect any paper in the file wrapper of the application, order copies of all or any part thereof (at a prepaid cost per 37 CFR 1.19) or make your position of record in the application. Alternatively, you may arrange to do any of the preceding through a registered patent attorney or agent presenting written authorization from you. If you care to join the application, counsel of record (see below) would presumably assist you. Joining in the application would entail the filing of an appropriate oath or declaration by you pursuant to 37 CFR 1.63.

Telephone inquiries regarding this communication should be directed to the undersigned at (571) 272-3283. Requests for information regarding your application should be directed to the File Information Unit at (703) 308-2733. Requests for information regarding how to pay for and order a copy of the application, or a specific paper in the application, should be directed to Certification Division at (703) 308-9726 or 1(800) 972-6382 (outside the Washington D.C. area).

Any further correspondence with respect to this matter may be filed electronically via EFS-Web selecting the document description "Petition for review and processing by the PCT Legal Office" or by mail addressed to Mail Stop PCT, Commissioner for Patents, Office of PCT Legal Administration, P.O. Box 1450, Alexandria, Virginia 22313-1450, with the contents of the letter marked to the attention of the Office of PCT Legal Administration.

/George Dombroske/
George Dombroske
PCT Legal Examiner
Office of PCT Legal Administration
Tel: (571) 272-3283

PAULEY PETERSEN & ERICKSON
2800 WEST HIGGINS ROAD
SUITE 365
HOFFMAN ESTATES IL 60169

United States Patent and Trademark Office

Commissioner for Patents
United States Patent and Trademark Office
P.O. Box 1450
Alexandria, VA 22313-1450
www.uspto.gov

MAILED

FEB 25 2011

PCT LEGAL ADMINISTRATION

Irina Borisovna SOROKULOVA
ul. Barbjusa, 12/26-123
UA-252005 Kiev
UKRAINE

In re Application of
Osipova et al.
Application No.: 11/919,356
PCT No.: PCT/RU2005/000231
Int. Filing Date: 28 April 2005
Priority Date: 28 April 2005
Attorney Docket No.: VO-808
For: Iirilis Biopreparation Based On Bacillus-Strain Bacteria, Bacillus Subtilis And Bacillus Lichen...

Dear Ms. Sorokulova
:

You are named as a joint inventor in the above identified United States patent application, filed under the provisions of 35 U.S.C. 116 (United States Code), and 37 CFR 1.47(a), Rules of Practice in Patent Cases. Should a patent be granted on the application you will be designated therein as a joint inventor.

As a named inventor you are entitled to inspect any paper in the file wrapper of the application, order copies of all or any part thereof (at a prepaid cost per 37 CFR 1.19) or make your position of record in the application. Alternatively, you may arrange to do any of the preceding through a registered patent attorney or agent presenting written authorization from you. If you care to join the application, counsel of record (see below) would presumably assist you. Joining in the application would entail the filing of an appropriate oath or declaration by you pursuant to 37 CFR 1.63.

Telephone inquiries regarding this communication should be directed to the undersigned at (571) 272-3283. Requests for information regarding your application should be directed to the File Information Unit at (703) 308-2733. Requests for information regarding how to pay for and order a copy of the application, or a specific paper in the application, should be directed to Certification Division at (703) 308-9726 or 1(800) 972-6382 (outside the Washington D.C. area).

Any further correspondence with respect to this matter may be filed electronically via EFS-Web selecting the document description "Petition for review and processing by the PCT Legal Office" or by mail addressed to Mail Stop PCT, Commissioner for Patents, Office of PCT Legal Administration, P.O. Box 1450, Alexandria, Virginia 22313-1450, with the contents of the letter marked to the attention of the Office of PCT Legal Administration.

/George Dombroske/
George Dombroske
PCT Legal Examiner
Office of PCT Legal Administration
Tel: (571) 272-3283

PAULEY PETERSEN & ERICKSON
2800 WEST HIGGINS ROAD
SUITE 365
HOFFMAN ESTATES IL 60169

UNITED STATES PATENT AND TRADEMARK OFFICE

Commissioner for Patents
United States Patent and Trademark Office
P.O. Box 1450
Alexandria, VA 22313-1450
www.uspto.gov

PAULEY PETERSEN & ERICKSON
2800 WEST HIGGINS ROAD
SUITE 365
HOFFMAN ESTATES IL 60169

MAILED

NOV 15 2010

PCT LEGAL ADMINISTRATION

In re Application of	:	
ORTMANN	:	
Application No.: 11/919,357	:	DECISION ON PETITION
PCT No.: PCT/DE2006/000720	:	
Int. Filing Date: 26 April 2006	:	UNDER 37 CFR 1.181
Priority Date: 29 April 2005	:	
Attorney Docket No.: MMG-138	:	
For: BIOSTABLE NEUROELECTRODE	:	

This decision is in response to applicant's petition to withdraw the holding of abandonment filed 03 September 2010 in the United States Patent and Trademark Office (USPTO).

BACKGROUND

On 26 April 2006, applicant filed international application PCT/DE2006/000720, which claimed priority of an earlier application filed 29 April 2005. A copy of the international application was transmitted to the United States from the International Bureau (IB) on 09 November 2006. Pursuant to 37 CFR 1.485, the deadline for payment of the basic national fee in the United States was to expire 30 months from the priority date, 29 October 2007.

On 26 October 2007, applicant filed a transmittal letter for entry into the national stage in the United States, which was accompanied by, inter alia: the requisite basic national fee as required by 35 U.S.C. 371(c)(1); an English translation of the international application as filed and first preliminary amendment.

On 08 September 2009, applicant was mailed a "NOTIFICATION OF MISSING REQUIREMENTS UNDER 35 U.S.C. 371" (Form PCT/DO/EO/905) informing applicant of the need to provide a signed oath or declaration of the inventor, in compliance with 37 CFR 1.497(a) and (b), identifying the application by the international application number and international filing date and provide payment of the surcharge for providing an oath or declaration later than thirty months from the priority date. Applicant was afforded two months to file a proper response.

On 07 July 2010, applicant was mailed a NOTIFICATION OF ABANDONMENT (Form PCT/DO/EO/909) informing applicant that applicant had failed to respond to the Form PCT/DO/EO/905 mailed 08 September 2009 within the time period set therein and that above-identified application was abandoned as to the United States.

On 03 September 2010, applicant filed the present petition to withdraw the holding of abandonment arguing that a response had been filed on 09 November 2009.

DISCUSSION

The best evidence of what was actually received by the Office is a postcard receipt containing a specific itemization of all the items being submitted. See MPEP 503. Here, applicant has provided a copy of the date-stamped postcard receipt, as well as, a complete copy of the prior filing and certification that the copy currently provided is a true and complete copy of the papers filed on 09 November 2009. The postcard identifies the application by serial number, title, inventor and attorney docket number. Among the items listed on the receipt is: Executed Declaration. The receipt is stamped "IAP08 Patent & Trademark Office 09 NOV 2009." Thus, it is clear that applicant filed an executed declaration on 09 November 2009 and it is proper to grant applicant's petition to withdraw the holding of abandonment for failure to file a response.

CONCLUSION

For the reasons detailed above, applicant's petition under 37 CFR 1.181 is **GRANTED**.

The Form PCT/DO/EO/909 mailed 07 July 2010 is hereby **VACATED**.

The application has an international filing date of 26 April 2006 under 35 U.S.C. 363 and will be given a date of **09 November 2009** under 35 U.S.C. 371(c)(1), (c)(2) and (c)(4).

This application is being returned to the United States Designated/Elected Office (US/DO/EO) for further processing in accordance with this decision, namely the issuance of a "Notification of Acceptance of Application Under 35 U.S.C. 371 and 37 CFR 1.494 or 1.495" (Form PCT/DO/EO/903) and a corrected filing receipt indicating the correct 371 date as detailed above.

Derek A. Putonen
Attorney Advisor
Office of PCT Legal Administration
Tel: (571) 272-3294

UNITED STATES PATENT AND TRADEMARK OFFICE

Commissioner for Patents
United States Patent and Trademark Office
P.O. Box 1450
Alexandria, VA 22313-1450
www.uspto.gov

BAE SYSTEMS
PO BOX 868
NHQ1-719
NASHUA NH 03061-0868

MAILED

JAN 17 2012

OFFICE OF PETITIONS

In re Application of	:	
Paul D. Zemany	:	
Application No. 11/919,365	:	DECISION ON PETITION
Filed: October 26, 2007	:	
Attorney Docket No. 20050081 US	:	

This is a decision on the petition under the unintentional provisions of 37 CFR 1.137(b), filed November 22, 2011, to revive the above-identified application.

The petition is **GRANTED**.

This application became abandoned for failure to timely submit Corrected Drawings on or before November 4, 2011, as required by the Notice of Allowance and Fee(s) Due and the Notice of Allowability, mailed August 4, 2011. Accordingly, the date of abandonment of this application is November 7, 2011. A Notice of Abandonment was mailed November 17, 2011.

The petition satisfies the requirements of 37 CFR 1.137(b) in that petitioner has supplied (1) Corrected Drawings, (2) the petition fee of $1,860.00; and (3) a proper statement of unintentional delay.

Telephone inquiries concerning this decision should be directed to the undersigned at (571) 272-7751.

This application is being referred to Publishing Division for processing into a patent and review of the Corrected Drawings submitted with the instant petition.

/Joan Olszewski/
Joan Olszewski
Petitions Examiner
Office of Petitions

UNITED STATES PATENT AND TRADEMARK OFFICE

Commissioner for Patents
United States Patent and Trademark Office
P.O. Box 1450
Alexandria, VA 22313-1450
www.uspto.gov

ARENA PHARMACEUTICALS, INC.
BOZICEVIC, FIELD & FRANCIS LLP
1900 UNIVERSITY AVENUE, SUITE 200
EAST PALO ALTO, CA 94303

MAILED
FEB 17 2011
OFFICE OF PETITIONS

In re Application of Chu et al. Application No. 11/919,381 Filed: July 31, 2009 Attorney Docket No. 22578-0024001 / 112.US2.P)	: : : : :	DECISION ON PETITION TO WITHDRAW FROM RECORD

This is a decision on the Request to Withdraw as attorney or agent of record under 37 C.F.R. § 1.36(b) filed January 14, 2011, which is being treated as a request to withdraw from employment in a proceeding before the Office under 37 C.F.R. § 10.40.

The request is **DISMISSED**.

A review of the file record indicates that Bozicevic, Field & Francis LLP does not have power of attorney in this patent application. Accordingly, the request to withdraw under 37 C.F.R. § 1.36(b) is not applicable.

The request to change the correspondence address of record is not accepted in view of Bozicevic, Field & Francis LLP not having power of attorney. See MPEP §§ 601.03 and 405.

All future communications from the Office will continue to be directed to the address listed below until otherwise notified by applicant.

Currently, there is no outstanding Office action that requires a reply.

Telephone inquires concerning this decision should be directed to the undersigned at (571) 272-7751.

Joan Olszewski
Petitions Examiner
Office of Petitions

cc: FISH & RICHARDSON P.C.
P.O. BOX 1022
MINNEAPOLIS MN 55440-1022

SPE RESPONSE FOR CERTIFICATE OF CORRECTION

Paper No.: _____

DATE : 3/30/2011

TO SPE OF : ART UNIT 1762 Wu David (spe)

SUBJECT : Request for Certificate of Correction for Appl. No.: 11/919387 Patent No.: 7842740

CofC mailroom date: 3/8/2011

Please respond to this request for a certificate of correction within 7 days.

FOR IFW FILES:

Please review the requested changes/corrections as shown in the **COCIN** document(s) in the IFW application image. No new matter should be introduced, nor should the scope or meaning of the claims be changed.

Please complete the response (see below) and forward the completed response to scanning using document code **COCX**.

FOR PAPER FILES:

Please review the requested changes/corrections as shown in the attached certificate of correction. Please complete this form (see below) and forward it with the file to:

Certificates of Correction Branch (CofC)
Randolph Square – 9D10-A
Palm Location 7580

Certificates of Correction Branch
703-756-1571 _____

Thank You For Your Assistance

The request for issuing the above-identified correction(s) is hereby:
Note your decision on the appropriate box.

- ☐ **Approved** — All changes apply.
- ☐ **Approved in Part** — Specify below which changes **do not** apply.
- ☒ **Denied** — State the reasons for denial below.

Comments: Applicants need to pay the fee because more than half of the mistakes are from applicants, e.g. sheet 4, sheet 6, sheet 8, col. 2, col. 3, col. 6, col. 11, col. 15 (3 areas), col. 18, and col. 27.

Wu
SPE

1762
Art Unit

UNITED STATES DEPARTMENT OF COMMERCE
Patent and Trademark Office
ASSISTANT SECRETARY OF COMMERCE AND
COMMISSIONER OF PATENTS AND TRADEMARKS
Washington, DC 20231

8/22/2011

Patent No. :7842740
Inventor(s) :Yashuhiro Koike
Issued :11/30/2010
Title :NON-BIREFRINGENT OPTICAL RESIN MATERIAL AND OPTICAL MEMBER
Atty.doc./File No.

Request for Certificates of Correction

Consideration has been given to your request for the issuance of a Certificate of Correction, for the above – identified patent under the provisions of CFR 1.322.

Inspection of the application for the patent reveals that the applicant needs to pay a $100 fee to make theses corrections by the Spe. Therefore being no fault on the Patent and Trademark Office, It has no authority to issue a certificate of correction under the provision of 1.322.

In view of the forgoing, your request in this matter, is hereby denied.

Future written correspondence concerning this matter should be filed and directed to Decisions & Certificates of Correction Branch.

Henry Randall
Decisions & Certificates
of Correction Branch
(703) 756-1571

STAAS & HALSEY LLP
1201 NEW YORK AVE., N.W.
7TH Floor
Washington, DC 20005

HR

UNITED STATES PATENT AND TRADEMARK OFFICE

Commissioner for Patents
United States Patent and Trademark Office
P.O. Box 1450
Alexandria, VA 22313-1450
www.uspto.gov

FOLEY AND LARDNER LLP
SUITE 500
3000 K STREET NW
WASHINGTON, DC 20007

MAILED
SEP 27 2010
OFFICE OF PETITIONS

In re Application of
Paul Talalay, et al.
Application No. 11/919,430
Filed: June 9, 2009
Attorney Docket No. 046585-0179

DECISION ON PETITION
TO WITHDRAW
FROM RECORD

This is a decision on the Request to Withdraw as attorney or agent of record under 37 C.F.R. § 1.36(b), filed August 13, 2010.

The request is **APPROVED**.

A grantable request to withdraw as attorney/agent of record must be signed by every attorney/agent seeking to withdraw or contain a clear indication that one attorney is signing on behalf of another/others.

The request was signed by Richard C. Peet on behalf of all attorneys of record who are associated with customer No. 22428. All attorneys/agents associated with the Customer Number 22428 have been withdrawn. Applicant is reminded that there is no attorney of record at this time.

The request to change the correspondence of record is not acceptable as the requested correspondence address is not that of: (1) the first named signing inventor; or (2) an intervening assignee of the entire interest under 37 C.F.R 3.71. All future communications from the Office will be directed to the first named signing inventor at the first copied address below until otherwise properly notified by the applicant.

In order to request or take action in a patent matter, the assignee must establish its ownership of the patent to the satisfaction of the Director. In this regard, a Statement under 37 CFR 3.73(b) must have either: (i) documentary evidence of a chain of title from the original owner to the assignee (*e.g.*, copy of an executed assignment), and a statement affirming that the documentary evidence of the chain of title from the original owner to the assignee was or concurrently is being submitted for recordation pursuant to § 3.11; or (ii) a statement specifying where documentary evidence of a chain of title from the original owner to the assignee is recorded in the assignment records of the Office (*e.g.*, reel and frame number).

There is an outstanding Office action mailed July 14, 2010 that requires a reply from the applicant.

Telephone inquiries concerning this decision should be directed to undersigned at 571-272-1642. All other inquiries concerning the examination or status of this application should be directed to the Technology Center.

/AMW/
April M. Wise
Petitions Examiner
Office of Petitions

cc: PAUL TALALAY
5512 BOX HILL LANE
BALTIMORE, MD 21210

cc: JOHNS HOPKINS UNIVERSITY
725 N. WOLFE STREET
406 WBSB
BALTIMORE, MD 21205-2185

UNITED STATES PATENT AND TRADEMARK OFFICE

UNITED STATES DEPARTMENT OF COMMERCE
United States Patent and Trademark Office
Address: COMMISSIONER FOR PATENTS
P.O. Box 1450
Alexandria, Virginia 22313-1450
www.uspto.gov

APPLICATION NUMBER	FILING OR 371(C) DATE	FIRST NAMED APPLICANT	ATTY. DOCKET NO./TITLE
11/919,430	06/09/2009	Paul Talalay	046585-0179

CONFIRMATION NO. 4560

POWER OF ATTORNEY NOTICE

22428
FOLEY AND LARDNER LLP
SUITE 500
3000 K STREET NW
WASHINGTON, DC 20007

OC000000043714886

Date Mailed: 09/27/2010

NOTICE REGARDING CHANGE OF POWER OF ATTORNEY

This is in response to the Power of Attorney filed 08/13/2010.

- The withdrawal as attorney in this application has been accepted. Future correspondence will be mailed to the new address of record. 37 CFR 1.33.

/amwise/

Office of Data Management, Application Assistance Unit (571) 272-4000, or (571) 272-4200, or 1-888-786-0101

14 SEP 2010

UNITED STATES PATENT AND TRADEMARK OFFICE

Commissioner for Patents
United States Patent and Trademark Office
P.O. Box 1450
Alexandria, VA 22313-1450
www.uspto.gov

FINNEGAN, HENDERSON, FARABOW, GARRETT & DUNNER
LLP
901 NEW YORK AVENUE, NW
WASHINGTON DC 20001-4413

In re Application of	:	
DE BONI, Maxime, et al.	:	
U.S. Application No.: 11/919,510	:	DECISION ON
PCT No.: PCT/FR2006/000955	:	
Int. Filing Date: 27 April 2006	:	PETITION
Priority Date: 27 April 2005	:	
Attorney Docket No.: 05725.1685	:	UNDER 37 CFR 1.181
For: DYEING COMPOSITION ...	:	
GLYCOL DERIVATIVES	:	

This is a decision on the petition under 37 CFR 1.181, filed in the United States Patent and Trademark Office on 04 June 2010.

BACKGROUND

On 27 April 2006, applicants filed international application PCT/FR2006/000955, claiming a priority date of 27 April 2005. The thirty month period for paying the basic national fee expired on 29 October 2007, as 27 October 2007 was a Saturday.

On 29 October 2007, applicants submitted payment of the basic national fee.

On 04 September 2009, applicants filed *inter alia*, a declaration and preliminary amendment.

On 20 May 2010, the Office mailed Notification of Abandonment (Form PCT/DO/EO/905) indicating that the application went abandoned for failure to pay the basic national fee by thirty months.

On 04 June 2010, applicants filed this petition to withdraw the holding of abandonment.

DISCUSSION

Applicants filed the basic national fee on 29 October 2007 and it is located in the file. The paper submission from 29 October 2007 is not present in the file, but the 04 June 2010 copies are accepted as having been received on 29 October 2007. The postcard receipt identifies this application, lists the check, a transmittal letter, preliminary amendment and a copy of the publication.

CONCLUSION

For the reasons set forth above, the petition under 37 CFR 1.181 is **GRANTED**.

The Notification of Abandonment (Form PCT/DO/EO/905) mailed 20 May 2010 is **VACATED**.

This application is being forwarded to the National Stage Processing Branch of the Office of Patent Application Processing for further processing in accordance with this decision.

/Erin P. Thomson/

Erin P. Thomson
Attorney Advisor
PCT Legal Administration

Phone: (571) 272-3292

UNITED STATES PATENT AND TRADEMARK OFFICE

Commissioner for Patents
United States Patent and Trademark Office
P.O. Box 1450
Alexandria, VA 22313-1450
www.uspto.gov

SYNTHETIC GENOMICS C/O MOFO
12531 HIGH BLUFF DRIVE, SUITE 100
SAN DIEGO CA 92130

MAILED

SEP 30 2010

OFFICE OF PETITIONS

In re Application of	:	
HUTCHISON III, Clyde A.	:	
Application No. 11/919,515	:	DECISION ON PETITION
Filed: October 29, 2007	:	TO WITHDRAW
Attorney Docket No. **40921-252427**	:	FROM RECORD

This is a decision on the Request to Withdraw as attorney or agent of record under 37 C.F.R. § 1.36(b), filed September 03, 2010.

The request is **moot** because a revocation of power of attorney has been previously filed.

A review of the file record indicates that the power of attorney to SYNTHETIC GENOMICS C/O MOFO has been revoked by the assignee of the patent application on September 24, 2010. Accordingly, the request to withdraw under 37 C.F.R. § 1.36(b) is moot.

All future communications from the Office will continue to be directed to the below-listed address until otherwise notified by applicant.

Telephone inquires concerning this decision should be directed to Tredelle Jackson at 571-272-2783.

/Tredelle D. Jackson/
Paralegal Specialist
Office of Petitions

cc: **SYNTHETIC GENOMICS, INC.**
C/O DLA PIPER LLP (US)
4365 EXECUTIVE DRIVE
SUITE 1100
SAN DIEGO CA 92121-2133

UNITED STATES PATENT AND TRADEMARK OFFICE

Commissioner for Patents
United States Patent and Trademark Office
P.O. Box 1450
Alexandria, VA 22313-1450
www.uspto.gov

MAILED

APR 15 2011

PCT LEGAL ADMINISTRATION

COOK ALEX LTD
SUITE 2850
200 WEST ADAMS STREET
CHICAGO IL 60606

In re Application of:
CORTEZ, Jerome, Lim, et al.
U.S. Application No.: 11/919,534
PCT No.: PCT/US2006/015836
International Filing Date: 26 April 2006
Priority Date: 27 April 2005
Attorney's Docket No.: 0715-0173.13
For: VEHICLE SUSPENSIONS HAVING LEAF SPRINGS AND ALTERNATIVE CLAMP GROUPS

DECISION ON PETITION
(37 CFR 1.78(a)(3))

This decision is issued in response to the "PETITION UNDER 37 CFR 1.78(a)(3) FOR ACCEPTANCE OF UNINTENTIONALLY DELAYED PRIORITY CLAIM" filed 20 January 2011.

For the reasons discussed below, the petition is **DISMISSED** without prejudice.

A petition for acceptance of a delayed claim for priority under 37 CFR 1.78(a)(3) is appropriate where, as here, the later-filed application was filed after 29 November 2000 and the applicant seeks to add a claim of benefit under 35 U.S.C. 120 and 365(c) to a prior-filed non-provisional application after the expiration of the time period set forth in 37 CFR 1.78(a)(2)(ii). A grantable petition under 37 CFR 1.78(a)(3) must be accompanied by:

(1) the reference to the prior-filed application required by 35 U.S.C. 120 and 37 CFR 1.78(a)(2)(i), unless previously submitted;
(2) the surcharge set forth in 37 CFR 1.17; and
(3) a statement that the entire delay between the date the claim was due under 37 CFR 1.78(a)(2)(ii) and the date the claim was filed was unintentional.

For the reasons discussed below, the present petition fails to satisfy item (1) above.

The present petition seeks to add a benefit claim identifying the present application as a continuation of U.S. Application No. 11/115,949. The petition was accompanied by the following proposed amendment to the first line of the description: "This application is a National Stage filing of PCT application no. PCT/US2006/015836, filed April 26, 2006, which is a

continuation of U.S. patent application no. 11/115,949, filed April 27, 2005, both of which are hereby incorporated herein by reference.

The amendment filed by applicants is unacceptable as filed because it indicates that the contents of the prior-filed application referred to therein (U.S non-provisional application 11/115,949) are "incorporated herein by reference." As set forth in MPEP section 201.06(c)(IV) (emphasis added):

> An incorporation by reference statement added after an application's filing date is not effective because no new matter can be added to an application after its filing date (see 35 U.S.C. 132(a)). **If an incorporation by reference statement is included in an amendment to the specification to add a benefit claim under 35 U.S.C. 120 after the filing date of the application, the amendment would not be proper.** When a benefit claim under 35 U.S.C. 120 is submitted after the filing of an application, the reference to the prior application cannot include an incorporation by reference statement of the prior application. See *Dart Indus. v. Banner*, 636 F.2d 684, 207 USPQ 273 (C.A.D.C. 1980).

Here, the application as filed did not include an incorporation by reference statement with respect to U.S application 11/115,949; thus, the inclusion in the present proposed amendment of an incorporation by reference statement directed to such applications is improper.

Based on the above, the reference to prior-filed U.S non-provisional application 11/115,949 contained in the proposed amendment filed with the present petition is not acceptable as filed. Item (1) of a grantable petition under 37 CFR 1.78(a)(3) is therefore not satisfied on the present record.

Before the petition under 37 CFR 1.78(a)(3) may be granted, applicant must submit a renewed petition accompanied by an acceptable substitute amendment (or ADS) containing a proper reference to U.S. application 11/115,949. No additional petition fee is required.

Any further correspondence with respect to this matter may be filed electronically via EFS-Web selecting the document description "Petition for review and processing by the PCT Legal Office" or by mail addressed to Mail Stop PCT, Commissioner for Patents, Office of PCT Legal Administration, P.O. Box 1450, Alexandria, Virginia 22313-1450, with the contents of the letter marked to the attention of the Office of PCT Legal Administration.

/RichardMRoss/

Richard M. Ross
Attorney Advisor
Office of PCT Legal Administration
Telephone: (571) 272-3296

UNITED STATES PATENT AND TRADEMARK OFFICE

Commissioner for Patents
United States Patent and Trademark Office
P.O. Box 1450
Alexandria, VA 22313-1450
www.uspto.gov

MAILED

JUN 13 2011

PCT LEGAL ADMINISTRATION

COOK ALEX LTD
SUITE 2850
200 WEST ADAMS STREET
CHICAGO IL 60606

In re Application of: CORTEZ, Jerome, Lim, et al. U.S. Application No.: 11/919,534 PCT No.: PCT/US2006/015836 International Filing Date: 26 April 2006 Priority Date: 27 April 2005 Attorney's Docket No.: 0715-0173.13 For: VEHICLE SUSPENSIONS HAVING LEAF SPRINGS AND ALTERNATIVE CLAMP GROUPS	DECISION ON RENEWED PETITION UNDER 37 CFR 1.78(a)(3)

This decision is issued in response to the "RENEWED PETITION UNDER 37 CFR 1.78(a)(3) FOR ACCEPTANCE OF UNINTENTIONALLY DELAYED PRIORITY CLAIM" filed 29 April 2011.

For the reasons discussed below, the renewed petition is **GRANTED**.

The decision mailed 15 April 2011 dismissed without prejudice applicants' petition under 37 CFR 1.78(a)(3) because applicants had not submitted an acceptable reference to the prior-filed application that is the subject of the present petition, U.S. application number 11/115,949. Specifically, the amendment filed by applicant with the previous petition included an incorporation by reference statement improperly directed to the prior-filed application.

The present renewed petition was accompanied by a revised amendment to the first sentence of the description that contains an acceptable reference identifying the present application as the national stage of PCT/US2006/015836 "which is a continuation of U.S. patent application 11/115,949, filed April 27, 2005," and this amendment does not include the improper incorporation by reference statement contained in the previous amendment.

The present submission satisfies the final outstanding requirement of a grantable petition under 37 CFR 1.78(a)(3) to add an unintentionally delayed benefit claim directed to the prior-filed U.S. application. Applicants' petition is therefore appropriately granted.

The granting of the petition to accept the delayed benefit claim to the prior-filed application under 37 CFR 1.78(a)(3) should <u>not</u> be construed as meaning that this application is entitled to the benefit of the filing date of the prior-filed application. In order for this application to be entitled to the benefit of the prior-filed application, all other requirements

under 35 U.S.C. 120 and 37 CFR 1.78(a)(1) and (a)(2) must be met. Similarly, the fact that the Filing Receipt accompanying this decision on petition will include the prior-filed application should not be construed as meaning that applicant is entitled to the claim for benefit of priority to the prior filed application noted thereon. Accordingly, the examiner will, in due course, consider this benefit claim and determine whether this application is entitled to the benefit of the earlier filing date.

A corrected Filing Receipt, which includes the priority claim directed to U.S. application 11/115,949 accompanies this decision on petition.

Any questions concerning this decision may be directed to the undersigned. All other inquiries concerning either the examination procedures or status of the application should be directed to Group Art Unit 3616.

/RichardMRoss/

Richard M. Ross
Attorney Advisor
Office of PCT Legal Administration
Telephone: (571) 272-3296
Facsimile: (571) 273-0459

ATTACHMENT: Corrected Filing Receipt

UNITED STATES PATENT AND TRADEMARK OFFICE

Commissioner for Patents
United States Patent and Trademark Office
P.O. Box 1450
Alexandria, VA 22313-1450
www.uspto.gov

MARK P. STONE
400 Columbus Avenue
Valhalla NY 10595

MAILED

JUN 29 2011

OFFICE OF PETITIONS

In re Application of Lars Karlander et al. Application No. 11/919,565 Filed: October 30, 2007 Attorney Docket No. HT-137	: : : : :	DECISION ON PETITION

This is a decision on the petition, filed March 28, 2011, which is being treated as a petition under 37 CFR 1.181 (no fee) requesting withdrawal of the holding of abandonment in the above-identified application.

The petition is **GRANTED**.

This application was held abandoned for failure to reply to the nonfinal Office action mailed March 15, 2010, which set a three (3) month shortened statutory period for reply. A Notice of Abandonment was mailed on September 22, 2010.

Petitioner asserts that the Office action dated March 15, 2010 was not received.

A review of the written record indicates an irregularity in the mailing of the Office action of March 15, 2010. In this regard, the Office received a change of address on November 12, 2008, prior to the mailing of the Office action of March 15, 2010. Office records were not updated to reflect this new change of address. Accordingly, as the Office action was mailed to an incorrect address, the Notice of Abandonment mailed September 22, 2010 is hereby vacated and the holding of abandonment withdrawn. It is also noted that petitioner has filed a new change of address on March 24, 2011, that has been accepted and entered. Therefore, all correspondence will be mailed to the new address of record noted above.

Telephone inquiries concerning this decision should be directed to JoAnne Burke at (571) 272-4584.

This application is being referred to the Technology Center technical support staff of Art Unit 3612 for remailing the Office action of March 15, 2010 and resetting the period for reply.

/Ramesh Krishnamurthy/
Ramesh Krishnamurthy
Petitions Examiner
Office of Petitions

UNITED STATES PATENT AND TRADEMARK OFFICE

Commissioner for Patents
United States Patent and Trademark Office
P.O. Box 1450
Alexandria, VA 22313-1450
www.uspto.gov

BIRCH STEWART KOLASCH & BIRCH
PO BOX 747
FALLS CHURCH, VA 22040-0747

MAILED

APR 11 2011

OFFICE OF PETITIONS

In re Application of	:	
Satoshi ARAI, et *al.*	:	
Application No. 11/919,580	:	DECISION GRANTING PETITION
Filed: October 30, 2007	:	UNDER 37 CFR 1.313(c)(2)
Attorney Docket No. **1551-0154PUS1**	:	

This is a decision on the petition under 37 CFR 1.313(c)(2), filed April 8, 2011, to withdraw the above-identified application from issue after payment of the issue fee.

The petition is **GRANTED**.

The above-identified application is withdrawn from issue for consideration of a submission under 37 CFR 1.114 (request for continued examination). *See* 37 CFR 1.313(c)(2).

Petitioner is advised that the issue fee paid on March 25, 2011 cannot be refunded. If, however, this application is again allowed, petitioner may request that it be applied towards the issue fee required by the new Notice of Allowance.[1]

Telephone inquiries should be directed to the undersigned at (571) 272-7253.

This application is being referred to Technology Center AU 1736 for processing of the request for continued examination under 37 CFR 1.114 and for consideration of the concurrently filed information disclosure statement.

/Monica A. Graves/
Petitions Examiner, Office of Petitions

---

[1] *The request to apply the issue fee to the new Notice may be satisfied by completing and returning the new Part B – Fee(s) Transmittal Form (along with any balance due at the time of submission). Petitioner is advised that the Issue Fee Transmittal Form* ***must*** *be completed and timely submitted to avoid abandonment of the application.*

UNITED STATES PATENT AND TRADEMARK OFFICE

Commissioner for Patents
United States Patent and Trademark Office
P.O. Box 1450

MAILED
NOV 29 2011
OFFICE OF PETITIONS

PYLE & PIONTEK LLC
221 N. LASALLE STREET, SUITE 1207
CHICAGO IL 60601

In re Application of	:	
Keith James HEYES et al.	:	ON PETITION
Application No. 11/919,600	:	
Filed: January 26, 2009	:	
Atty. Docket No.: IMV-40028		

This is a decision on the petition filed October 31, 2011, which is being treated as a petition under 37 CFR 1.181 requesting withdrawal of the abandonment in the above-identified application.

The petition is **GRANTED**.

The application was held abandoned for failure to reply in a timely manner to the non-final Office action mailed March 22, 2011 (Office action), which set a shortened statutory period for reply of three (3) months. A Notice of Abandonment was mailed September 26, 2011.

Petitioner requests the Notice of Abandonment mailed September 26, 2011 for failure to respond to the non-final Office action mailed March 22, 2011 be withdrawn as petitioner timely filed a response. A review of the record indicates that the original copy of the response is now in the file and was timely filed on September 27, 2011 with a certificate of mailing of September 22, 2011.

Telephone inquiries relating to this decision should be directed to Robert DeWitty, Petitions Attorney, Office of Petitions (571-272-8427).

The application file will be referred to the Technology Center Art Unit 1777 for consideration of the Response filed September 27, 2011.

Ramesh Krishnamurthy

Ramesh Krishnamurthy
Petitions Examiner
Office of Petitions

SPE RESPONSE FOR CERTIFICATE OF CORRECTION

DATE : July 25, 2011

TO SPE OF : ART UNIT 1771

SUBJECT : Request for Certificate of Correction for Appl. No.: 11/919653 Patent No.: 79317783

CofC mailroom date: 6-22-10

Please respond to this request for a certificate of correction within 7 days.

FOR IFW FILES:

Please review the requested changes/corrections as shown in the **COCIN** document(s) in the IFW application image. No new matter should be introduced, nor should the scope or meaning of the claims be changed.

Please complete the response (see below) and forward the completed response to scanning using document code **COCX**.

FOR PAPER FILES:

Please review the requested changes/corrections as shown in the attached certificate of correction. Please complete this form (see below) and forward it with the file to:

Certificates of Correction Branch (CofC)
Randolph Square – 9D10-A
Palm Location 7580

Note: _____

_____

Magdalene Talley
Certificates of Correction Branch
571-272-0423 _____

Thank You For Your Assistance

The request for issuing the above-identified correction(s) is hereby:
Note your decision on the appropriate box.

- ☒ **Approved** — All changes apply.
- ☐ **Approved in Part** — Specify below which changes **do not** apply.
- ☐ **Denied** — State the reasons for denial below.

Comments: Approved as suggested by the Applicant

P C Singh
SPE

1771
Art Unit

UNITED STATES PATENT AND TRADEMARK OFFICE

Commissioner for Patents
United States Patent and Trademark Office
P.O. Box 1450
Alexandria, VA 22313-1450
www.uspto.gov

MERCHANT & GOULD (MICROSOFT)
P.O. BOX 2903
MINNEAPOLIS MN 55402-0903

MAILED
NOV 23 2010
OFFICE OF PETITIONS

In re Application of	:	
Aleksander Ohrn, et al.	:	
Application No. 11/919,663	:	DECISION GRANTING PETITION
Filed: October 13, 2007	:	UNDER 37 CFR 1.313(c)(2)
Attorney Docket No. 14917.1377USWO	:	

This is a decision on the petition under 37 CFR 1.313(c)(2), filed, November 22, 2010 to withdraw the above-identified application from issue after payment of the issue fee.

The petition is **GRANTED**.

The above-identified application is withdrawn from issue for consideration of a submission under 37 CFR 1.114 (request for continued examination). *See* 37 CFR 1.313(c)(2).

Petitioner is advised that the issue fee paid on October 25, 2010 cannot be refunded. If, however, this application is again allowed, petitioner may request that it be applied towards the issue fee required by the new Notice of Allowance.[1]

Telephone inquiries should be directed to Terri Johnson at (571) 272-2991.

This application is being referred to Technology Center AU 2156 for processing of the request for continued examination under 37 CFR 1.114 and for consideration of the concurrently filed information disclosure statement.

/Terri Johnson/
Terri Johnson
Petitions Examiner
Office of Petitions

---

[1] *The request to apply the issue fee to the new Notice may be satisfied by completing and returning the new Part B – Fee(s) Transmittal Form (along with any balance due at the time of submission). Petitioner is advised that the Issue Fee Transmittal Form must be completed and timely submitted to avoid abandonment of the application.*

UNITED STATES PATENT AND TRADEMARK OFFICE

UNITED STATES DEPARTMENT OF COMMERCE
United States Patent and Trademark Office
Address: COMMISSIONER FOR PATENTS
P.O. Box 1450
Alexandria, Virginia 22313-1450
www.uspto.gov

APPLICATION NO.	FILING DATE	FIRST NAMED INVENTOR	ATTORNEY DOCKET NO.	CONFIRMATION NO.
11/919,664	10/31/2007	Pentti Virtaven	OHMAN-014	5312

32954 7590 09/15/2011
JAMES C. LYDON
100 DAINGERFIELD ROAD
SUITE 100
ALEXANDRIA, VA 22314

EXAMINER
FRANCIS, FAYE

ART UNIT	PAPER NUMBER
3725	

MAIL DATE	DELIVERY MODE
09/15/2011	PAPER

Please find below and/or attached an Office communication concerning this application or proceeding.

The time period for reply, if any, is set in the attached communication.

UNITED STATES PATENT AND TRADEMARK OFFICE

Commissioner for Patents
United States Patent and Trademark Office
P.O. Box 1450
Alexandria, VA 22313-1450
www.uspto.gov

JAMES C. LYDON
100 DAINGERFIELD ROAD
SUITE 100
ALEXANDRIA VA 22314

In re Application of:
VIRTAVEN, PENTTI
Serial No.: 11/919,664
Filed: Oct. 31, 2007
Docket: OHMAN-014
Title: IMPACT MILL

DECISION ON PETITION

This is a decision on the petition filed on September 8, 2011 seeking to withdraw the finality of the Office action of September 6, 2011 in accordance with MPEP 706.07(d). The petition is being considered pursuant to 37 CFR § 1.181 and no fee is required for the petition.

The petition is **DISMISSED**.

The petitioner requests withdrawal of the finality of the Office action mailed September 6, 2011. The petitioner argues that the final rejection was not necessitated by the applicant's claim amendment filed on August 13, 2011 because the amendment to independent claim 16 narrows the scope of the original claim 16. There was no clear issue developed between the examiner and the applicant.

The record shows that:

1. On May 31, 2011, the examiner issued a non-final rejection. In the rejection, claims 16-30 are rejected as best understood under 35 U.S.C. 102(b) as being anticipated by Bennett (225,552). Claims 16-30 were also rejected as best understood under 35 U.S.C. 103(a) as being unpatentable over either Tjumanok et al. (4,659,025) or Perrine (3,028,105) or Tanaka et al. (5,548,856) in view of either Schacht (2,155,150) or Bennett.
2. In response to the non-final rejection on May 13, 2011, the applicant extensively amended independent claim 16 on August 13, 2011 and traversed the examiner's rejection.
3. On Sep. 6, 2011, the examiner mailed a final rejection. In view of the substantive amendment to independent claim 16, the examiner rejected the amend claims. Claims 16-25, 27-29 and 31 were finally rejected under 35 U.S.C. 102(b) as being anticipated by Kupka (4,403,868). 4. Claims 16-25, 27-29 and 31 are finally rejected under 35 U.S.C. 103(a) as being unpatentable over either Tjumanok et al. (4,659,025) or Perrine

(3,028,105) or Tanaka et al. (5,845,856)in view of either Schacht (2,155,150) or Bennett (225,552) and Kupka.

4. On Sep. 8, 2011, the current petition for withdrawal of finality was filed. The applicant believes that the new grounds of rejections were not necessitated by the amended and added claims.

Discussion and Analysis

In this petition, petitioner asserts that the finality of the Office action was improper because the final rejection was not necessitated by the amendment filed on May August 13, 2011. In order to determine whether or not the amendment filed August 13, 2011 necessitated the new grounds of rejection in the final Office action of September 8, 2011, a comparison of the amended claims filed on August 13, 2011 and the original claims filed on October 31, 2007 must be made. A review of at least the amended independent claim 16 presented on August 13, 2011 shows that the amendment to the original independent claim 16 includes the newly added and/or amended limitations regarding "the shaft of the second rotor is fitted inside the shaft of the first rotor" and "said driving apparatus is a single motor". It is undisputed that the claim amendments submitted August 13, 2011 add new claim language, elements and features. The scope of the newly amended independent claim 16 was for the first time presented to the examiner in the amendment filed August 13, 2011. Original independent claim 16 does not include these limitations and was rejected under 35 USC 102(b) as anticipated Bennet (225,552) and under 35 U.S.C. 103(a) as being unpatentable over either Tjumanok et al. (4,659,025) or Perrine (3,028,105) or Tanaka et al. (5,548,856) in view of either Schacht (2,155,150) or Bennett. . Based on the newly amended independent claim 16 of August 13, 2011, the examiner has changed and /or added additional reference(s) in the rejection of claims in the final rejection of September 6, 2011.

In amended claim 16, the limitations regarding "the shaft of the second rotor is fitted inside the shaft of the first rotor" and "said driving apparatus is a single motor" were amended or added. The examiner was required to search for and reconsider the prior art relating to the amended or added limitations. Subsequently, new prior art references, patents to Kupka and other cited patents, were added to the rejection which were necessitated by the amendment of August 13, 2011. For example, the Kupka patent is now required in order to show or teach the added limitations regarding "the shaft of the second rotor is fitted inside the shaft of the first rotor" and "said driving apparatus is a single motor". Whereas the original claims do not require those added limitations. Therefore, the Kupka patent was added and applied. After the amendment of August 13, 2011, the search strategy, search fields, consideration and application of prior art references of record differed. This evidences new grounds of rejection were necessitated by the applicant's amendment filed on August 13, 2011. Therefore, the final rejection is proper and in compliance with M.P.E.P. § 706.07(a)[1]. The relief requested by petitioner cannot be granted by petition.

[1] Relevant portion of MPEP § 706.07(a): Final Rejection, When Proper on Second Action, states: Under present practice, second or any subsequent actions on the merits shall be final, except where the examiner introduces a new ground of rejection that is neither necessitated by applicant's amendment of the claims nor based on information submitted in an information disclosure statement filed during the period set forth in 37 CFR 1.97(c) with the fee set forth in 37 CFR 1.17(p).

Conclusion

For the foregoing reasons, the relief requested by petitioner will not be granted. The examiner's finality of the Office action dated September 6, 2011 is appropriate.

Any request for reconsideration of this decision must be submitted within TWO (2) MONTHS from the mail date of this decision, 37 CFR 1.181(f). No extension of time under 37 CFR 1.136(a) is permitted. The reconsideration request should include a cover letter entitled "Renewed Petition under 37 CFR 1.181". Any inquiry regarding this decision should be directed to Henry Yuen, Special Programs Examiner, at (571) 272-4856.

Accordingly, the petition is dismissed.

Donald T. Hajec, Director
Technology Center 3700

UNITED STATES PATENT AND TRADEMARK OFFICE

Commissioner for Patents
United States Patent and Trademark Office
P.O. Box 1450
Alexandria, VA 22313-1450
www.uspto.gov

LAW OFFICE OF MICHAEL A. SANZO, LLC
15400 CALHOUN DR.
SUITE 125
ROCKVILLE MD 20855

MAILED
JUN 16 2011
OFFICE OF PETITIONS

In re Application of	:	
Hans Wenk et al	:	
Application No. 11/919,701	:	DECISION GRANTING PETITION
Filed: October 30, 2007	:	UNDER 37 CFR 1.313(c)(2)
Attorney Docket No. 7601/11000	:	

This is a decision on the petition under 37 CFR 1.313(c)(2), filed June 16, 2011, to withdraw the above-identified application from issue after payment of the issue fee.

The petition is **GRANTED**.

The above-identified application is withdrawn from issue for consideration of a submission under 37 CFR 1.114 (request for continued examination). *See* 37 CFR 1.313(c)(2).

Petitioner is advised that the issue fee paid on May 14, 2011 cannot be refunded. If, however, this application is again allowed, petitioner may request that it be applied towards the issue fee required by the new Notice of Allowance.[1]

Telephone inquiries should be directed to the undersigned at (571) 272-3208.

This application is being referred to Technology Center AU 1761 for processing of the request for continued examination under 37 CFR 1.114 and for consideration of the concurrently filed IDS.

/Karen Creasy/
Karen Creasy
Petitions Examiner
Office of Petitions

---

[1] *The request to apply the issue fee to the new Notice may be satisfied by completing and returning the new Part B – Fee(s) Transmittal Form (along with any balance due at the time of submission). Petitioner is advised that the Issue Fee Transmittal Form must be completed and timely submitted to avoid abandonment of the application.*

UNITED STATES PATENT AND TRADEMARK OFFICE

Commissioner for Patents
United States Patent and Trademark Office
P.O. Box 1450
Alexandria, VA 22313-1450
www.uspto.gov

MAILED

OCT 03 2011

PCT LEGAL ADMINISTRATION

Patricia Robinson
Genencor International, Inc.
925 Page Mill Road
Palo Alto CA 94304-1013

In re Application of	:	
COLLIER, et al.	:	DECISION ON PETITION
Application No.: 11/919,717	:	
PCT No.: PCT/US2006/015711	:	UNDER 37 CFR 1.137(b)
Int. Filing Date: 25 April 2006	:	
Priority Date: 05 May 2005	:	
Atty. Docket No.: GC874-US	:	
For: PERSONAL CARE COMPOSITIONS AND	:	
METHODS FOR THEIR USE	:	

The petition to revive under 37 CFR 1.137(b) filed 25 August 2011 in the above-captioned application is hereby **GRANTED** as follows:

Applicant's statement that "the entire delay in filing the required reply from the due date for the required reply until the filing of a grantable petition under 37 CFR 1.137(b) was unintentional" and the prompt filing of the petition satisfies the requirement of 37 CFR 1.137(b)(3).

A review of the application file reveals that applicant has currently provided a compliant raw sequence listing which has been entered by the Biotechnology Systems Branch of the Scientific and Technical Information Center (STIC) and a compliant, executed declaration of the inventors. Therefore, the request to revive the application abandoned under 35 U.S.C. 371(d) is granted as to the National stage in the United States of America. Further, a review of the application file reveals that all of the requirements of 35 U.S.C. 371 for entry into the national stage in the United States have been satisfied.

This application is being returned to the United States Designated/Elected Office (DO/EO/US) for treatment in accordance with this decision.

Derek A. Putonen
Attorney Advisor
Office of PCT Legal Administration
Tel: (571) 272-3294

PTO/SB/20PCT-US (09-10)
Approved for use through 01/31/2012. OMB 0651-0058
U.S. Patent and Trademark Office; U. S. DEPARTMENT OF COMMERCE
Under the Paperwork Reduction Act of 1995, no persons are required to respond to a collection of information unless it displays a valid OMB control number.

REQUEST FOR PARTICIPATION IN THE PATENT COOPERATION TREATY - PATENT PROSECUTION HIGHWAY (PCT-PPH) PILOT PROGRAM IN A U.S. APPLICATION WHERE THE USPTO WAS THE ISA OR IPEA

Application No:	11/919,733	Filing date:	January 21, 2009
First Named Inventor:	Peter R. Anderson		
Title of the Invention:	Progressive Wagering Game With Funding Distribution Feature		

THIS REQUEST FOR PARTICIPATION IN THE PCT-PPH PILOT PROGRAM ALONG WITH THE REQUIRED DOCUMENTS MUST BE SUBMITTED VIA EFS-WEB. INFORMATION REGARDING EFS-WEB IS AVAILABLE AT HTTP://WWW.USPTO.GOV/EBC/EFS_HELP.HTML

APPLICANT HEREBY REQUESTS PARTICIPATION IN THE PCT-PPH PROGRAM AND PETITIONS TO MAKE THE ABOVE-IDENTIFIED APPLICATION SPECIAL UNDER THE PCT-PPH PROGRAM.

The above-identified application is (1) a national stage entry of the corresponding PCT application, or (2) a national stage entry of another PCT application which claims priority to the corresponding PCT application, or (3) a national application that claims domestic/ foreign priority to the corresponding PCT application, or (4) a national application which forms the basis for the priority claim in the corresponding PCT application, or (5) a continuing application of a U.S. application that satisfies one of (1) to (4) above, or (6) a U.S. application that claims domestic benefit to a U.S. provisional application which forms the basis for the priority claim in the corresponding PCT application.

The corresponding PCT application number(s) is/are: PCT/US2006/020979

The international date of the corresponding PCT application(s) is/are:

May 30, 2006

I. List of Required Documents:

a. **A copy of the latest international work product (WO/ISA, WO/IPEA, or IPER) in the above–identified corresponding PCT application(s)**

- [x] Is attached
- [ ] Is not attached because the document is already in the U.S. application.

b. **A copy of all claims which were indicated as having novelty, inventive step and industrial applicability in the above-identified corresponding PCT application(s).**

- [x] Is attached.
- [ ] Is not attached because the document is already in the U.S. application.

c. **English translations of the documents in a. and b. above are attached (if the documents are not in the English language). A statement that the English translation is accurate is attached for the document in b. above.**

This collection of information is required by 35 U.S.C. 119, 37 CFR 1.55, and 37 CFR 1.102(d). The information is required to obtain or retain a benefit by the public, which is to file (and by the USPTO to process) an application. Confidentiality is governed by 35 U.S.C. 122 and 37 CFR 1.11 and 1.14. This collection is estimated to take 2 hours to complete, including gathering, preparing, and submitting the completed application form to the USPTO. Time will vary depending upon the individual case. Any comments on the amount of time you require to complete this form and/or suggestions for reducing this burden should be sent to the Chief Information Officer, U.S. Patent and Trademark Office, U.S. Department of Commerce, P.O. Box 1450, Alexandria, VA 22313-1450. DO NOT SEND FEES OR COMPLETED FORMS TO THIS ADDRESS.

Under the Paperwork Reduction Act of 1995, no persons are required to respond to a collection of information unless it displays a valid OMB control number.

REQUEST FOR PARTICIPATION IN THE PCT-PPH PILOT PROGRAM IN A U.S. APPLICATION WHERE THE USPTO WAS THE ISA OR IPEA

(continued)

Application No.:	11/919,733
First Named Inventor:	Peter R. Anderson

d. **(1) An information disclosure statement listing the documents cited in the international work products (ISR, WO/ISA, WO/IPEA, IPER) of the corresponding PCT application.**

☐ Is attached

☒ Has already been filed in the above-identified U.S. application on January 10, 2008

(2) Copies of all documents (except) for U.S. patents or U.S. patent application publications)

☐ Are attached.

☒ Have already been filed in the above-identified U.S. application on January 10, 2008

II. Claims Correspondence Table:

Claims in US Application	Patentable Claims in the corresponding PCT Application	Explanation regarding the correspondence
4-6	4-6	Identical
11-28	11-28	Identical

III. All the claims in the US application sufficiently correspond to the patentable claims in the corresponding PCT application.

Signature /Jason S. Kray, Reg. No. 66,926/	Date July 13, 2011
Name (Print/Typed) Jason S. Kray	Registration Number 66,926

Privacy Act Statement

The **Privacy Act of 1974 (P.L. 93-579)** requires that you be given certain information in connection with your submission of the attached form related to a patent application or patent. Accordingly, pursuant to the requirements of the Act, please be advised that: (1) the general authority for the collection of this information is 35 U.S.C. 2(b)(2); (2) furnishing of the information solicited is voluntary; and (3) the principal purpose for which the information is used by the U.S. Patent and Trademark Office is to process and/or examine your submission related to a patent application or patent. If you do not furnish the requested information, the U.S. Patent and Trademark Office may not be able to process and/or examine your submission, which may result in termination of proceedings or abandonment of the application or expiration of the patent.

The information provided by you in this form will be subject to the following routine uses:

1. The information on this form will be treated confidentially to the extent allowed under the Freedom of Information Act (5 U.S.C. 552) and the Privacy Act (5 U.S.C 552a). Records from this system of records may be disclosed to the Department of Justice to determine whether disclosure of these records is required by the Freedom of Information Act.
2. A record from this system of records may be disclosed, as a routine use, in the course of presenting evidence to a court, magistrate, or administrative tribunal, including disclosures to opposing counsel in the course of settlement negotiations.
3. A record in this system of records may be disclosed, as a routine use, to a Member of Congress submitting a request involving an individual, to whom the record pertains, when the individual has requested assistance from the Member with respect to the subject matter of the record.
4. A record in this system of records may be disclosed, as a routine use, to a contractor of the Agency having need for the information in order to perform a contract. Recipients of information shall be required to comply with the requirements of the Privacy Act of 1974, as amended, pursuant to 5 U.S.C. 552a(m).
5. A record related to an International Application filed under the Patent Cooperation Treaty in this system of records may be disclosed, as a routine use, to the International Bureau of the World Intellectual Property Organization, pursuant to the Patent Cooperation Treaty.
6. A record in this system of records may be disclosed, as a routine use, to another federal agency for purposes of National Security review (35 U.S.C. 181) and for review pursuant to the Atomic Energy Act (42 U.S.C. 218(c)).
7. A record from this system of records may be disclosed, as a routine use, to the Administrator, General Services, or his/her designee, during an inspection of records conducted by GSA as part of that agency's responsibility to recommend improvements in records management practices and programs, under authority of 44 U.S.C. 2904 and 2906. Such disclosure shall be made in accordance with the GSA regulations governing inspection of records for this purpose, and any other relevant (*i.e.*, GSA or Commerce) directive. Such disclosure shall not be used to make determinations about individuals.
8. A record from this system of records may be disclosed, as a routine use, to the public after either publication of the application pursuant to 35 U.S.C. 122(b) or issuance of a patent pursuant to 35 U.S.C. 151. Further, a record may be disclosed, subject to the limitations of 37 CFR 1.14, as a routine use, to the public if the record was filed in an application which became abandoned or in which the proceedings were terminated and which application is referenced by either a published application, an application open to public inspection or an issued patent.
9. A record from this system of records may be disclosed, as a routine use, to a Federal, State, or local law enforcement agency, if the USPTO becomes aware of a violation or potential violation of law or regulation.

REQUIRED DOCUMENT I(A)

The following document(s) include(s) a copy of the latest international work product in the corresponding PCT application

CORRECTED

PATENT COOPERATION TREATY

PCT

INTERNATIONAL PRELIMINARY REPORT ON PATENTABILITY

(Chapter II of the Patent Cooperation Treaty)

(PCT Article 36 and Rule 70)

Applicant's or agent's file reference 47079-396WO	**FOR FURTHER ACTION**	See Form PCT/IPEA/416
International application No. PCT/US06/20979	International filing date *(day/month/year)* 30 May 2006 (30.05.2006)	Priority date *(day/month/year)* 31 May 2005 (31.05.2005)
International Patent Classification (IPC) or national classification and IPC IPC: **A63F 9/24**(2006.01) USPC: 463/26		
Applicant WMS GAMING INC.		

1. This report is the international preliminary examination report, established by this International Preliminary Examining Authority under Article 35 and transmitted to the applicant according to Article 36.
2. This REPORT consists of a total of 5 sheets, including this cover sheet.
3. This report is also accompanied by ANNEXES, comprising:
   a. ☒ *(sent to the applicant and to the International Bureau)* a total of 1 sheets, as follows:
      - ☒ sheets of the description, claims and/or drawings which have been amended and are the basis of this report and/or sheets containing rectifications authorized by this Authority (see Rule 70.16 and Section 607 of the Administrative Instructions).
      - ☐ sheets which supersede earlier sheets, but which this Authority considers contain an amendment that goes beyond the disclosure in the international application as filed, as indicated in item 4 of Box No. I and the Supplemental Box.

   b. ☐ *(sent to the International Bureau only)* a total of (indicate type and number of electronic carrier(s)) _____ , containing a sequence listing and/or tables related thereto, in electronic form only, as indicated in the Supplemental Box Relating to Sequence Listing (see Section 802 of the Administrative Instructions).
4. This report contains indications relating to the following items:

☒	Box No. I	Basis of the report
☐	Box No. II	Priority
☐	Box No. III	Non-establishment of opinion with regard to novelty, inventive step and industrial applicability
☐	Box No. IV	Lack of unity of invention
☒	Box No. V	Reasoned statement under Article 35(2) with regard to novelty, inventive step or industrial applicability; citations and explanations supporting such statement
☐	Box No. VI	Certain documents cited
☐	Box No. VII	Certain defects in the international application
☐	Box No. VIII	Certain observations on the international application

Date of submission of the demand 19 April 2007 (19.04.2007)	Date of completion of this report 10 March 2008 (10.03.2008)
Name and mailing address of the IPEA/ US Mail Stop PCT, Attn: IPEA/US Commissioner for Patents P.O. Box 1450 Alexandria, Virginia 22313-1450 Facsimile No. (571) 273-3201	Authorized officer Robert Pezzuto Telephone No. (571) 272-3700

INTERNATIONAL PRELIMINARY REPORT ON PATENTABILITY	International application No. PCT/US06/20979

Box No. I Basis of the report

1. With regard to the **language**, this report is based on:
   - [x] the international application in the language in which it was filed.
   - [ ] a translation of the international application into English, which is the language of a translation furnished for the purposes of:
     - [ ] international search (under Rules 12.3(a) and 23.1(b))
     - [ ] publication of the international application (under Rule 12.4(a))
     - [ ] international preliminary examination (under Rules 55.2(a) and/or 55.3(a))

2. With regard to the **elements** of the international application, this report is based on *(replacement sheets which have been furnished to the receiving Office in response to an invitation under Article 14 are referred to in this report as "originally filed" and are not annexed to this report)*:
   - [ ] the international application as originally filed/furnished
   - [x] the description:
     pages 1-17 as originally filed/furnished
     pages* NONE received by this Authority on
     pages* NONE received by this Authority on
   - [x] the claims:
     pages 18-21 as originally filed/furnished
     pages* NONE as amended (together with any statement) under Article 19
     pages* 22 received by this Authority on 19 April 2007 (19.04.2007)
     pages* NONE received by this Authority on
   - [x] the drawings:
     pages 1-8 as originally filed/furnished
     pages* NONE received by this Authority on
     pages* NONE received by this Authority on
   - [ ] a sequence listing and/or any related table(s) - see Supplemental Box Relating to Sequence Listing.

3. [ ] The amendments have resulted in the cancellation of:
   - [ ] the description, pages
   - [ ] the claims, Nos.
   - [ ] the drawings, sheets/figs
   - [ ] the sequence listing (*specify*):
   - [ ] any table(s) related to the sequence listing (*specify*):

4. [ ] This report has been established as if (some of) the amendments annexed to this report and listed below had not been made, since they have been considered to go beyond the disclosure as filed, as indicated in the Supplemental Box (Rule 70.2(c)).
   - [ ] the description, pages
   - [ ] the claims, Nos.
   - [ ] the drawings, sheets/figs
   - [ ] the sequence listing (*specify*):
   - [ ] any table(s) related to the sequence listing (*specify*):

5. [ ] This report has been established taking into account the **rectification of an obvious mistake** authorized by or notified to this Authority under Rule 91 (Rule 70.2(e)).

* *If item 4 applies, some or all of those sheets may be marked "superseded."*

INTERNATIONAL PRELIMINARY REPORT ON PATENTABILITY

International application No.
PCT/US06/20979

Box No. V Reasoned statement under Article 35(2) with regard to novelty, inventive step or industrial applicability; citations and explanations supporting such statement

1. Statement

Novelty (N)	Claims 3-6 and 11-28	YES
	Claims 1-2, 7-10, and 29-30	NO
Inventive Step (IS)	Claims 4-6 and 11-28	YES
	Claims 1-3, 7-10, and 29-30	NO
Industrial Applicability (IA)	Claims 1-30	YES
	Claims NONE	NO

2. Citations and Explanations (Rule 70.7)
Please See Continuation Sheet

Supplemental Box

In case **the space in any of the preceding boxes is not sufficient.**

Continuation of:

V. 2. Citations and Explanations:

Claims 1, 2, 7-10, 29-30 lack novelty under PCT Article 33(2) as being anticipated by Acres.

Regarding claim 1, Acres shows a method for playing a wagering game on a gaming machine (300) at which players are eligible for a progressive game having a plurality of progressive jackpots (307, 308, 309, 310, 316, 317, 318), the method comprising storing, in a memory device (350), a plurality of distribution sets (page 4, paragraphs 0122-0124) for funding said plurality of progressive jackpots, each distribution set defining a percentage of funds (page 4, paragraphs 0122-0124) to be distributed to each of said plurality of progressive jackpots, in response to receiving wagers (301) from said players, conducting wagering games in which said players are eligible for one or more of said plurality of progressive jackpots (307, 308, 309, 310, 316, 317, 318), and funding said plurality of progressive jackpots by a funding amount in accordance with said plurality of distribution sets (page 4, paragraphs 0122-0124).

Regarding claim 2, Acres also shows said funding amount corresponds to a portion of said wagers from said players (page 4, paragraphs 0122-0124),

Regarding claim 7, Acers disclsoes the funding is conducted in a manner to increase at least one of said plurality of progressive jackpots at a higher rate than other ones of said plurality of progressive jackpots (page 4, paragraphs 0122-0124, shows jackpots funded at 0.5%, 0.75%, 1.0% and 1.5% of the wager).

Regarding claim 8, Acres also shows said memory device (350) is located external to said gaming terminal (300).

Regarding claim 9, Acres dsicloses the wagering game has a randomly selected outcome (three cherries at top of gaming machine 300 in figure 1) selected from a plurality of outcomes (alternatives to the three cherries at top of gaming machine 300 in figure 1), said plurality of outcomes including a plurality of progressive-winning outcomes (also represented by alternatives to the three cherries at top of gaming machine 300 in figure 1), each of said plurality of progressive-winning outcomes awarding one or more of said plurality of progressive jackpots (307, 308, 309, 310, 316, 317, 318).

Supplemental Box

Regarding claims 10 and 29-30, Acres discloses each of said plurality of distribution sets includes a percentage of total coin-in for said progressive game to be allocated to each of said plurality of progressive jackpots (page 4, paragraphs 0122-0124). Acres discloses that cash bonus prize is funded at .54% the coin-in amount and the mystery prize is funded at 1.5% the coin-in amount (paragraph 107)

Claim 3 lacks an inventive step under PCT Article 33(3) as being obvious over Acres in view of Schneider et al.
Acres shows all the features of the claims except for funding a jackpot at 0%. Schneider et al. show a distribution set that includes a percentage of funds to be distributed to at least one of said plurality of progressive jackpots that is 0% (column 6, table 1, shows the funds distributed in some instances is 0). It would have been obvious at the time the invention was made to have a distribution set with a 0% funding of a progressive jackpot in the gaming system of Acres as taught by Schneider et al. in order to provide a greater appearance of randomness in the funding of the progressive jackpots.

Claims 4-6 and 11-28 meet the criteria set out in PCT Article 33(2)-(3), because the prior art does not teach or fairly suggest the sequential use of multiple distribution sets to fund a plurality of progressive jackpots in a gaming machine.

Claims 1-30 meet the criteria set out in PCT Article 33(4), and thus have industrial applicability because the subject matter claimed can be made or used in industry.

Response to Arguments:

The arguments have been considered, but are not persuasive. Acres, clearly discloses three types of progressive mystery bonus prizes that are each funded at 1.5%. The mystery prizes consist of a car, a large cash prize, and a random prize. Each prize clearly is progressive or based on an accumulated coin-in amount. If applicant disagrees that these are distinct progress, Acres also discloses a cash prize progressive funded based on a .54% coin-in distribution, a mystery progressive prize based on a 1.5% coin-in distribution, and a main progressive prize based on a .75% coin-in distribution, which is clearly at least two separate progressive jackpots funded based on different distribution sets. Acres, also, discloses a hidden pool for other bonus events. At least in this regards, Acres discloses a plurality of progressive jackpots with different distribution sets and therefore the arguments set forth are moot.

REQUIRED DOCUMENT I(B)

The following document(s) include(s) a copy of all claims which were indicated as having novelty, inventive step and industrial applicability in the corresponding PCT application

WHAT IS CLAIMED IS:

1. A method for playing a wagering game on a gaming machine at which players are eligible for a progressive game having a plurality of progressive jackpots, the method comprising:

storing, in a memory device, a plurality of distribution sets for funding said plurality of progressive jackpots, each distribution set defining a percentage of funds to be distributed to each of said plurality of progressive jackpots;

in response to receiving wagers from said players, conducting wagering games in which said players are eligible for one or more of said plurality of progressive jackpots; and

funding said plurality of progressive jackpots by a funding amount in accordance with said plurality of distribution sets.

2. The method of claim 1, wherein said funding amount corresponds to a portion of said wagers from said players.

3. The method of claim 1, wherein at least one of said plurality of distribution sets includes a percentage of funds to be distributed to at least one of said plurality of progressive jackpots that is 0%.

4. The method of claim 1, wherein said funding includes utilizing said plurality of distribution sets in a sequential order.

5. The method of claim 4, wherein said funding includes switching between a first distribution set and a second distribution set in said sequential order in response to a threshold associated with said first distribution set being met, said threshold being an amount related to a total coin-in for said progressive game.

6. The method of claim 5, wherein said threshold for said first distribution set is different from a threshold for other distribution sets within said plurality of distribution sets.

7. The method of claim 1, wherein said funding is conducted in a manner to increase at least one of said plurality of progressive jackpots at a higher rate than other ones of said plurality of progressive jackpots.

8. The method of claim 1, wherein said memory device is located external to said gaming terminal.

9. The method of claim 1, wherein said wagering game has a randomly selected outcome selected from a plurality of outcomes, said plurality of outcomes including a plurality of progressive-winning outcomes, each of said plurality of progressive-winning outcomes awarding one or more of said plurality of progressive jackpots.

10. The method of claim 1, wherein each of said plurality of distribution sets includes a percentage of total coin-in for said progressive game to be allocated to each of said plurality of progressive jackpots.

11. A gaming system for playing a progressive game have a plurality of progressive jackpots, comprising:

a first gaming machine having a first wagering game with a plurality of symbols that indicate a randomly selected outcome of said wagering game, said first gaming machine allowing a player to be eligible for said plurality of progressive jackpots;

a second gaming machine having a second wagering game with a plurality of symbols that indicate a randomly selected outcome of said second wagering game, said second gaming machine allowing a player to be eligible for said plurality of progressive jackpots; and

a controller coupled to said first and second gaming terminals and operative to allocate progressive funds from at least said first and second gaming machines to said plurality of progressive jackpots in accordance with a plurality of distribution sets that are sequentially utilized, each of said distribution sets defining a percentage of funds to be distributed to each of said plurality of progressive jackpots.

12. The system of claim 11, wherein said controller is further operative to, in response to the randomly selected outcome at said first gaming terminal being a progressive-jackpot winning outcome, award said player one or more of said plurality of progressive jackpots.

13. The system of claim 11, wherein said plurality of distribution sets are stored in a memory device coupled to said controller.

14. The system of claim 11, wherein said controller is further operative to utilize said plurality of distribution sets in a sequential order that repeats.

15. The system of claim 14, wherein said controller switches between said plurality of distribution sets in response to a certain threshold value of total coin-in for said progressive game being achieved.

16. The system of claim 15, wherein said certain threshold value is different for different ones of said plurality of distribution sets.

17. The system of claim 11, wherein at least one of said plurality of progressive jackpots receives (i) 0% of said funds as dictated by some of said plurality of distribution sets and (ii) a higher percentage of said funds as dictated by others of said plurality of distribution sets.

18. The system of claim 11, wherein the controller is located external to said first and second gaming machines.

19. The system of claim 11, wherein said plurality of distribution sets results in different amounts being allocated to different ones of said plurality of progressive jackpots.

20. A method of operating a progressive game that is accessible at a plurality of gaming machines, said progressive game having a plurality of progressive jackpots, said method comprising:

collecting wager-input data at said plurality of gaming machines that corresponds to wager inputs made at said plurality of gaming machines;

crediting a portion of said wager inputs to a first group of said plurality of progressive jackpots in accordance with a first distribution set; and

in response to said wager-input data meeting a predetermined criteria, crediting a portion of subsequent wager inputs to a second group of said plurality of progressive jackpots in accordance with a second distribution set, said first group directing funds to at least one progressive jackpot in an amount that is different from said second group.

21. The method of claim 20, further including in response to said wager-input data meeting another predetermined criteria while distributing funds in accordance to said second distribution set, crediting a portion of subsequent wager inputs to a third group of said plurality of progressive jackpots in accordance with a

third distribution set, said first and second groups directing funds to at least one progressive jackpot in an amount that is different from said third group.

22. The method of claim 20, wherein said first and second groups are mutually exclusive.

23. The method of claim 20, wherein said first and second groups are different but both include a common one of said plurality of progressive jackpots.

24. The method of claim 23, wherein said common one receives an amount in accordance with said first distribution set that is different from an amount received in accordance with said second distribution set.

25. The method of claim 20, wherein said predetermined criteria is a total-coin value of said wager inputs being a predetermined value.

26. A method for operating a progressive game having a plurality of progressive jackpots, the method comprising:

aggregating progressive-jackpot funds from a plurality of gaming machines at which said progressive game is accessible; and

increasing said plurality of progressive jackpots with said progressive-jackpot funds in accordance with a plurality of distribution sets for funding said plurality of progressive jackpots, each distribution set dictating an amount to be distributed to each of said plurality of progressive jackpots, said increasing includes sequentially switching between or among said plurality of distribution sets.

27. The method of claim 26, wherein said sequential switching occurs in response to said progressive-jackpot funds from said plurality of gaming machines exceeding predetermine values.

28. The method of claim 27, wherein said predetermined values are different when switching between different ones of said plurality of distribution sets.

UNITED STATES PATENT AND TRADEMARK OFFICE

UNITED STATES DEPARTMENT OF COMMERCE
United States Patent and Trademark Office
Address: COMMISSIONER FOR PATENTS
P.O. Box 1450
Alexandria, Virginia 22313-1450
www.uspto.gov

APPLICATION NO.	FILING DATE	FIRST NAMED INVENTOR	ATTORNEY DOCKET NO.	CONFIRMATION NO.
11/919,733	01/21/2009	Petér R. Anderson	247079-000396USPX	5354

70243 7590 07/19/2011
NIXON PEABODY LLP
300 S. Riverside Plaza
16th Floor
CHICAGO, IL 60606

EXAMINER
HOWARAH, GEORGE L

ART UNIT	PAPER NUMBER
3717	

MAIL DATE	DELIVERY MODE
07/19/2011	PAPER

Please find below and/or attached an Office communication concerning this application or proceeding.

The time period for reply, if any, is set in the attached communication.

UNITED STATES PATENT AND TRADEMARK OFFICE

Commissioner for Patents
United States Patent and Trademark Office
P.O. Box 1450
Alexandria, VA 22313-1450
www.uspto.gov

NIXON PEABODY LLP
300 S. Riverside Plaza
16th Floor
CHICAGO IL 60606

In re Application of:
ANDERSON, PETER R.
Serial No.: 11/919733
Filed: October 31, 2007
Attorney Docket No. : 247079-000396USPX
Title: PROGRESSIVE WAGERING GAME WITH FUNDING DISTRIBUTION FEATURE

DECISION ON A REQUEST TO PARTICIPATE IN PCT/PATENT PROSECUTION HIGHWAY PROGRAM AND PETITION TO MAKE SPECIAL UNDER CFR 1.102(a)

This is a decision on the request to participate in the Patent Prosecution Highway (PPH) program and the petition under 37 CFR 1.102(a), filed July 13, 2011 to make the above-identified application special.

The request and petition are **granted.**

A grantable request to participate in the PPH pilot program and petition to make special require:

(1) The U.S. application must validly claim priority under 35 U.S.C. 119(a) to one or more PCT applications filed in the JPO, EPO, KIPO, or USPTO;
(2) Applicant must submit a copy of the allowable/patentable claim(s) from the PCT application(s) latest international work product (the written opinion or the IPER) along with an English translation thereof and a statement that the English translation is accurate;
(3) All the claims in the U.S. application must sufficiently correspond or be amended to sufficiently correspond to the allowable/patentable claim(s) in the PCT application(s);
(4) Examination of the U.S. application has not begun;
(5) Applicant must submit a copy of the latest international work product from the PCT application containing the allowable/patentable claim(s) along with an English translation thereof and a statement that the English translation is accurate; and
(6) Applicant must submit an IDS listing the documents cited by the PCT examiner in the international work product along with copies of documents except U.S. patents or U.S. patent application publications.

In light of the petition being properly submitted, the request to participate in the PPH program and the petition comply with the above requirements. Accordingly, the above-identified application has been accorded "special" status.

The applicant is encouraged to cite and submit all relevant prior art references, if any, to facilitate examination in this application.

Response must be filed via EFS-Web. Telephone inquiries concerning this decision should be directed to Henry C. Yuen, at 571-272-4856.

Petition is **granted**.

/Henry C. Yuen/

Henry C. Yuen
Special Programs Examiner
Technology Center 3700
Tel: 571-272-4856

UNITED STATES PATENT AND TRADEMARK OFFICE

8-16-2011

Commissioner for Patents
United States Patent and Trademark Office
P.O. Box 1450
Alexandria, VA 22313-1450
www.uspto.gov

Patent No : 7,985,799 B2
Ser. No. : 11/919,852
Inventor(s) : Luigi Resconi, et. al.
Issued : July 26, 2011

Re: Request for Certificate of Correction

Consideration has been given your request for the issuance of a certificate of correction for the above-identified patent under the provisions of Rule(s) 1.322.

Assignees' names and addresses (assignment data) printed in a patent, are based *solely* on information supplied in the appropriate space for identifying the assignment data, i.e., item 3 of the Issue Fee Transmittal Form PTOL-85B. Granting of a request under 37 CFR 3.81(b) is required to correct applicant's error providing ***incorrect or erroneous*** assignment data, *before* issuance of a Certificate of Correction, under 37 CFR 1.323 *(see Manual of Patent Examining Procedures (M.P.E.P) Chp.1400, sect. 1481).* This procedure is required *at any time after the issue fee is paid*, including after issuance of the patent.

In view of the foregoing, your request is hereby denied.

A request to correct the Assignee under 37 CFR 3.81(b) should include:

A. **the processing fee set forth in 37 CFR 1.17(i) (currently $130);**
B. a statement that the failure to include the correct assignee name on the PTOL-85B was inadvertent; and
C. a copy of the Notice of Recordation of Assignment Document, reflecting the reel and frame number where the assignment(s) is recorded and/or reflecting proof of *the date* the assignment was submitted for recordation.

In the Request, Applicant(s) may request that the file be forwarded to Certificates of Correction Branch, for issuance of a Certificate of Correction, if the Request is granted.

Any request under 37 CFR 3.81(b) should be directed to the following address or facsimile number:

By mail: Mail Stop PETITIONS
Commissioner for Patents
Post Office Box 1450
Alexandria, VA 22313-1450

By hand: Customer Service Window
Mail Stop Petitions
Randolph Building
401 Dulany Street
Alexandria, VA 22314

By fax: (703) 872-9306
ATTN: Office of Petitions

If a fee (currently $100) was previously submitted for consideration of a Request for Certificate of Correction, under CFR 1.323, to correct assignment data, , no additional fee is required.

Eva James
For Mary Diggs
Decisions & Certificates
of Correction Branch
(571) 272-3422 or 703- 756 -1580

Dilworth IP, LLC
2 Corporate Drive, Suite 206
Trumbull, CT 06611

ej

UNITED STATES PATENT AND TRADEMARK OFFICE

Commissioner for Patents
United States Patent and Trademark Office
P.O. Box 1450
Alexandria, VA 22313-1450
www.uspto.gov

FOLEY HOAG, LLP
PATENT GROUP, WORLD TRADE CENTER WEST
155 SEAPORT BLVD
BOSTON MA 02110

MAILED
JUL 27 2011
OFFICE OF PETITIONS

In re Application of	:	
MURADYAN, et al	:	
Application No. 11/919,938	:	DECISION ON PETITION
Filed: February 27, 2009	:	TO WITHDRAW
Attorney Docket No. ICD-024.01	:	FROM RECORD
	:	

This is a decision on the Request to Withdraw as attorney or agent of record under 37 C.F.R. § 1.36(b), filed July 11, 2011.

The request is **APPROVED**.

A grantable request to withdraw as attorney/agent of record must be signed by every attorney/agent seeking to withdraw or contain a clear indication that one attorney is signing on behalf of another/others. The Office requires the practitioner(s) requesting withdrawal to certify that he, she, or they have: (1) given reasonable notice to the client, prior to the expiration of the response period, that the practitioner(s) intends to withdraw from employment; (2) delivered to the client or a duly authorized representative of the client all papers and property (including funds) to which the client is entitled; and (3) notified the client of any responses that may be due and the time frame within which the client must respond, pursuant 37 CFR 10.40(c).

The request was signed by Stephen B. Deutsch on behalf of the attorneys of record associated with Customer No. 25181.

The attorneys of record associated with Customer No. 25181 have been withdrawn.

Applicant is reminded that there is no attorney of record at this time.

The correspondence address of record has been changed and the new correspondence address is the address indicated below until otherwise properly notified by the applicant.

Telephone inquiries concerning this decision should be directed to the undersigned at (571) 272-6735.

/Diane C. Goodwyn/
Diane C. Goodwyn
Petitions Examiner
Office of Petitions

cc: ICAD, INC.
98 SPIT BROOK ROAD
NASHUA NH 03062

UNITED STATES PATENT AND TRADEMARK OFFICE

UNITED STATES DEPARTMENT OF COMMERCE
United States Patent and Trademark Office
Address: COMMISSIONER FOR PATENTS
P.O. Box 1450
Alexandria, Virginia 22313-1450
www.uspto.gov

APPLICATION NUMBER	FILING OR 371(C) DATE	FIRST NAMED APPLICANT	ATTY. DOCKET NO./TITLE
11/919,938	02/27/2009	Naira Muradyan	ICD-024.01

CONFIRMATION NO. 8079

POWER OF ATTORNEY NOTICE

25181
FOLEY HOAG, LLP
PATENT GROUP, WORLD TRADE CENTER WEST
155 SEAPORT BLVD
BOSTON, MA 02110

OC000000048981673

Date Mailed: 07/27/2011

NOTICE REGARDING CHANGE OF POWER OF ATTORNEY

This is in response to the Power of Attorney filed 07/11/2011.

- The withdrawal as attorney in this application has been accepted. Future correspondence will be mailed to the new address of record. 37 CFR 1.33.

/dcgoodwyn/

Office of Data Management, Application Assistance Unit (571) 272-4000, or (571) 272-4200, or 1-888-786-0101

UNITED STATES PATENT AND TRADEMARK OFFICE

Commissioner for Patents
United States Patent and Trademark Office
P.O. Box 1450
Alexandria, VA 22313-1450
www.uspto.gov

CHOATE, HALL & STEWART LLP
TWO INTERNATIONAL PLACE
BOSTON MA 02110

MAILED

JAN 18 2011

OFFICE OF PETITIONS

In re Application of	:	DECISION ON PETITION
Sylvain Chemtob, et al.	:	TO WITHDRAW
Application No. 11/919,941	:	FROM RECORD
Filed: January 25, 2008	:	
Attorney Docket No. **2008693-0014**	:	

This is a decision on the request to withdraw as attorney of record under 37 CFR § 1.36, filed December 17, 2010.

The request is **NOT APPROVED**.

The request cannot be approved because it lacks a forwarding correspondence address of the first named inventor or a properly intervening assignee.

If the forwarding correspondence address is to the assignee, the Office will only accept correspondence address changes to the most current address information provided for the assignee of the entire interest *that properly became of record under 37 CFR 3.71.* 37 CFR 3.71(c) states:

> *An assignee becomes of record either in a national patent application or a reexamination proceeding by filing a statement in compliance with § 3.73(b) that is signed by a party who is authorized to act on behalf of the assignee.*

The assignee must establish its ownership of the patent to the satisfaction of the Director. In this regard, the statement under 37 CFR 3.73(b) must have either: (i) documentary evidence of a chain of title from the original owner to the assignee (*e.g.*, copy of an executed assignment), and a statement affirming that the documentary evidence of the chain of title from the original owner to the assignee was or concurrently is being submitted for recordation pursuant to § 3.11; or (ii) a statement specifying where documentary evidence of a chain of title from the original owner to the assignee is recorded in the assignment records of the Office (*e.g.*, reel and frame number).

All future communications from the Office will continue to be directed to the above-listed address until otherwise notified by applicant.

Telephone inquires concerning this decision should be directed to the undersigned at (571) 272-2991.

/Terri Johnson/
Terri Johnson
Petitions Examiner
Office of Petitions

cc: **GOUDREAU GAGE DUBUC**
2000 MCGILL COLLEGE
SUITE 2200
MONTREAL, CANADA H3A 3-H3

UNITED STATES PATENT AND TRADEMARK OFFICE

Commissioner for Patents
United States Patent and Trademark Office
P.O. Box 1450
Alexandria, VA 22313-1450
www.uspto.gov

ST. ONGE STEWARD JOHNSTON & REENS, LLC
986 BEDFORD STREET
STAMFORD CT 06905-5619

MAILED
SEP 26 2011
OFFICE OF PETITIONS

In re Application of	:	
Helle Wittorff, et al.	:	
Application No. 11/919,958	:	DECISION ON PETITION
Filed: November 5, 2007	:	
Attorney Docket No. 05198-P0025A	:	

This is a decision on the petition under the unintentional provisions of 37 CFR 1.137(b), filed August 31, 2011, to revive the above-identified application.

The petition is **GRANTED**.

The application became abandoned for failure to reply in a timely manner to the non-final Office action mailed November 18, 2010, which set a shortened statutory period for reply of three (3) months. No extensions of time under the provisions of 37 CFR 1.136(a) were obtained. Accordingly, the application became abandoned on February 19, 2011. The Notice of Abandonment was mailed June 27, 2011.

The petition satisfies the requirements of 37 CFR 1.137(b) in that petitioner has supplied (1) the reply in the form of an amendment, (2) the petition fee of $1,620, and (3) a proper statement of unintentional delay.

Telephone inquiries concerning this decision should be directed to Terri Johnson at (571) 272-2991.

This application is being referred to Technology Center AU 1781 for appropriate action by the Examiner in the normal course of business on the reply received.

/Terri Johnson/
Terri Johnson
Petitions Examiner
Office of Petitions

Doc Code: PET.GREEN
Document Description: Petition for Green Tech Pilot

PTO/SB/420 (11-10)
Approved for use through 01/31/2011. OMB 0651-0062
U.S. Patent and Trademark Office; U. S. DEPARTMENT OF COMMERCE
Under the Paperwork Reduction Act of 1995, no persons are required to respond to a collection of information unless it displays a valid OMB control number.

PETITION TO MAKE SPECIAL UNDER THE GREEN TECHNOLOGY PILOT PROGRAM

Attorney Docket Number: 10494.0003-00000	Application Number (if known): 11/919,974	Filing date: 371(c) date January 6, 2009
First Named Inventor: Andre Sloth Eriksen		
Title: Cooling System For a Computer System		

APPLICANT HEREBY REQUESTS TO PARTICIPATE IN THE GREEN TECHNOLOGY PILOT PROGRAM FOR THE ABOVE-IDENTIFIED APPLICATION. See Instruction Sheet on page 2.

This petition must be timely filed electronically using the USPTO electronic filing system, EFS-Web.

1. By filing this petition:

   Applicant is requesting early publication: Applicant hereby requests early publication under 37 CFR 1.219 and the publication fee set forth in 37 CFR 1.18(d) accompanies this request.

2. By filing this petition: applicant is agreeing to make an election without traverse in a telephonic interview and elect an invention that meets the eligibility requirements for the Green Technology Pilot Program, if the Office determines that the claims are not obviously directed to a single invention. See Instruction Sheet.

3. This request is accompanied by statements of special status for the eligibility requirement.

4. The application contains no more than three (3) independent claims and twenty (20) total claims.

5. The application does not contain any multiple dependent claims.

6. Other attachments: Preliminary Amendment

Signature Abhatta	Date March 10, 2011
Name (Print/Typed) Arpita Bhattacharyya	Registration Number 63,681

Note: *Signatures of all the inventors or assignees of record of the entire interest or their representative(s) are required in accordance with 37 CFR 1.33 and 11.18. Please see 37 CFR 1.4(d) for the form of the signature. If necessary, submit multiple forms for more than one signature see below*.*

[X] *Total of 1 forms are submitted.

The information is required to obtain or retain a benefit by the public which is to file (and by the USPTO to process) an application. Confidentiality is governed by 35 U.S.C. 122 and 37 CFR 1.11 and 1.14. This collection is estimated to take 12 hours to complete, including gathering, preparing, and submitting the completed application form to the USPTO. Time will vary depending upon the individual case. Any comments on the amount of time you require to complete this form and/or suggestions for reducing this burden, should be sent to the Chief Information Officer, U.S. Patent and Trademark Office, U.S. Department of Commerce, P.O. Box 1450, Alexandria, VA 22313-1450. DO NOT SEND FEES OR COMPLETED FORMS TO THIS ADDRESS. **SEND TO: Commissioner for Patents, P.O. Box 1450, Alexandria, VA 22313-1450.**

If you need assistance in completing the form, call 1-800-PTO-9199 and select option 2.

PATENT
Customer No. 22,852
Attorney Docket No. 10494.0003-00000

IN THE UNITED STATES PATENT AND TRADEMARK OFFICE

In re U.S. national phase of PCT/DK2005/000310	)	
Inventor: André Sloth ERIKSEN	)	Group Art Unit: 3785
Application No.: 11/919,974	)	Examiner: Ruby, TRAVIS C.
Filed: January 6, 2009	)	Confirmation No.: 9542
For: COOLING SYSTEM FOR A COMPUTER SYSTEM	)	

Commissioner for Patents
P.O. Box 1450
Alexandria, VA 22313-1450

Sir:

STATEMENT IN SUPPORT OF PETITION TO MAKE SPECIAL UNDER THE GREEN TECHNOLOGY PILOT PROGRAM

Applicant submits this Statement concurrently with a Petition to Make Special Under the Green Technology Pilot Program and a Preliminary Amendment. Applicant submits that this application qualifies for participation in the Green Technology Pilot Program because it meets the eligibility requirements set forth in the notice entitled "*Pilot Program for Green Technologies Including Greenhouse Gas Reduction*," 74 Fed. Reg. 64666-69 (published December 8, 2009) ("the Program Notice"), as modified by the notices entitled "*Elimination of Classification Requirement in the Green Technology Pilot Program*," 75 Fed. Reg. 28554-55 (published May 21, 2010), and "*Expansion and Extension of the Green Technology Pilot Program*," 75 Fed. Reg. 69049-50 (published November 10, 2010).

I. Requirements Under Section I of the Program Notice

(1) This application is an international application that has entered the national stage in compliance with 35 U.S.C. § 371(c). Furthermore, this application was filed on November 6, 2007, which is before the December 8, 2009, publication date of the Program Notice.

(2) This application is currently classified in U.S. Class 165. However, the requirement that an application be classified in one of the specific U.S. classifications identified in section VI of the Program Notice has been eliminated by the notice entitled "*Elimination of Classification Requirement in the Green Technology Pilot Program*," 75 Fed. Reg. 28554-55 (published May 21, 2010).

(3) As noted above, this Statement is being filed concurrently with a Preliminary Amendment in compliance with 37 C.F.R. § 1.121. As amended by the Preliminary Amendment, this application currently contains two independent claims, and twenty total claims, and no multiple dependent claims.

(4) The currently pending claims are directed to a single invention that at least materially contributes to the more efficient utilization and conservation of energy resources. If, however, the Office determines that the claims are directed to multiple inventions (e.g., in a restriction requirement), Applicant agrees to make an election without traverse in a telephonic interview, and to elect an invention that meets the eligibility requirements set forth in the Program Notice.

(5) This Statement is being electronically filed with a Form PTO/SB/420 before December 31, 2011.

(6) To the undersigned's knowledge, this Statement is being filed at least one day prior to the date that a first Office Action appears in the Patent Application Information Retrieval (PAIR) system. As of today, PAIR indicates the status of this application to be: "Docketed New Case–Ready for Examination."

(7) This application has already been published. The publication number is US 2009-0218072 A1.

II. Requirements Under Section III of the Program Notice

As stated in Section III of the Program Notice, "[p]atent applications are [] eligible for the Green Technology Pilot Program if the applications are for inventions that materially contribute to: (1) the discovery or development of renewable energy resources; (2) the more efficient utilization and conservation of energy resources; or (3) the reduction of greenhouse gas emissions." 74 Fed. Reg. 64666-69 (December 8, 2009) at 64667. The Program Notice further explains that the second category includes "inventions relating to the reduction of energy consumption in combustion systems, industrial equipment, and household appliances." *Id.*

Applicant submits that the basis for the special status for this application is that the invention disclosed therein materially contributes to the more efficient utilization and conservation of energy resources. Applicant's claimed integrated cooling apparatus are incorporated into "green servers" and other computer equipment to increase their performance and decrease energy consumption. Embodiments described in the specification can also be used to retrofit previous generations of servers and computers to make them more energy efficient.

The exponential increase in the processing power of servers and the rising cost of energy has necessitated the adoption of energy-efficient hardware to reduce the power consumption of data centers. Applicant's invention addresses the need to lower data center power consumption by providing energy-efficient cooling technologies that increase the "performance per watt" of the servers. In testing an exemplary implementation of principles disclosed in the specification, it was observed that on average a liquid cooling system can lead to "at the wall" power saving of 60 W for a server running at 100% load, which amounts to almost a 20% reduction in power consumption per server. There are currently an estimated 44 million servers in various data centers around the world. *See* R. H. Katz, "*Tech Titans Building Boom*," IEEE Spectrum, Green Tech, published February 2009. With energy saving of 60 W per server, 2640 MW of energy could be saved around the world. To put this number in context, this is about the entire solar capacity of Italy, or about 5 medium-sized coal fired power plants, or 6 times the planned Cape Wind project.

In addition to the instantaneous power savings per server, implementation of the energy-efficient liquid cooling technology can lower power consumption and overall operating costs of air conditioning in highly packed data centers. Additionally, Applicant submits that the principles disclosed in the specification can be used for making more energy-efficient computers for offices or household usage.

In sum, Applicant respectfully submits that the present disclosure can significantly further the goals of green computing by making the use of computers more energy-efficient.

III. Conclusion

This Statement and the accompanying Petition are in full compliance with the pertinent statutes and regulations. If the Office, for any reason, considers the documents submitted herewith to be deficient in any way, the Office is invited to call Applicant's undersigned representative at (617) 452-1676.

Applicant understands that no fee is required for participation in the Green Technology Pilot Program. If, however, any fee is necessary, please charge it to Deposit Account No. 06-0916.

Respectfully submitted,

FINNEGAN, HENDERSON, FARABOW,
GARRETT & DUNNER, L.L.P.

Dated: March 10, 2011

By: Abhatta
Arpita Bhattacharyya
Reg. No. 63,681

UNITED STATES PATENT AND TRADEMARK OFFICE

UNITED STATES DEPARTMENT OF COMMERCE
United States Patent and Trademark Office
Address: COMMISSIONER FOR PATENTS
P.O. Box 1450
Alexandria, Virginia 22313-1450
www.uspto.gov

APPLICATION NO.	FILING DATE	FIRST NAMED INVENTOR	ATTORNEY DOCKET NO.	CONFIRMATION NO.
11/919,974	01/06/2009	Andre Sloth Eriksen	10494.0003-0000	9542

22852 7590 03/22/2011
FINNEGAN, HENDERSON, FARABOW, GARRETT & DUNNER LLP
901 NEW YORK AVENUE, NW
WASHINGTON, DC 20001-4413

EXAMINER
RUBY, TRAVIS C

ART UNIT	PAPER NUMBER
3785	

MAIL DATE	DELIVERY MODE
03/22/2011	PAPER

Please find below and/or attached an Office communication concerning this application or proceeding.

The time period for reply, if any, is set in the attached communication.

UNITED STATES PATENT AND TRADEMARK OFFICE

Commissioner for Patents
United States Patent and Trademark Office
P.O. Box 1450
Alexandria, VA 22313-1450
www.uspto.gov

FINNEGAN, HENDERSON, FARABOW, GARRETT & DUNNER
LLP
901 NEW YORK AVENUE, NW
WASHINGTON DC 20001-4413

In re Application of	:	
ERIKSEN, ANDRE SLOTH	:	DECISION ON PETITION
Application No. 11/919,974	:	TO MAKE SPECIAL UNDER
Filed: Nov. 6, 2007	:	THE GREEN TECHNOLOGY
Attorney Docket No. 10494.0003-0000	:	PILOT PROGRAM

This is a decision on the petition under 37 CFR 1.102, filed March 10, 2011, to make the above-identified application special under the pilot program for applications pertaining to Green Technologies as set forth in 74 Federal Register Notice 64666 (December 8, 2009) and amended by 75 Federal Register Notice 28554 (May 21, 2010) and 75 Federal Register Notice 69049 (November 10, 2010).

The petition is **DISMISSED**.

If reconsideration of this decision is desired, a petition for reconsideration must be filed within ONE (1) MONTH OR THIRTY (30) DAYS from the mail date of this decision, whichever is longer. No extension of this time limit can be granted under 37 CFR 1.136(a) or (b). The petition for reconsideration should include an exhaustive attempt to provide the lacking item(s) noted below, since, after a decision on the petition for reconsideration, no further reconsideration or review of the matter will be undertaken by the Director.

A grantable petition to make an application special under 37 CFR 1.102 and the pilot program as set forth in 74 FR 64666 must be directed to a nonprovisional application filed under 35 USC 111(a) or be a national stage entry under 35 USC 371, exclusive of any reissue applications.

In order to qualify for special status, the following requirements must be met. 1) The application must have no more than 3 independent claims and no more than 20 total claims. 2) The application must not contain any multiple dependent claims. 3) The petition must state the basis for seeking special status, i.e., the claimed invention either: A) materially enhances the quality of the environment or B) materially contributes to: i) the discovery or development of renewable energy resources, ii) the more efficient utilization and conservation of energy resources, or iii) greenhouse gas emission reduction. 4) If the disclosure is not clear on its face that the claimed invention materially contributes under category (A) or (B), the petition must be accompanied by

a statement by the applicant, assignee, or an attorney/agent registered to practice before the Office explaining how the materiality standard is met. 5) A statement that applicant will agree to make an election without traverse in a telephonic interview if a restriction requirement is made by the examiner. 6) The petition to make special must be filed electronically. 7) The petition must be filed at least one day prior to the date that a first Office Action appears in the Patent Application Information Retrieval (PAIR) system. 8) The petition must be accompanied by a request for early publication in compliance with 37 CFR 1.219 and include the publication fee as set forth in 37 CFR 1.18(d). The requirement for a fee for consideration of the petition to make special for applications pertaining to Green Technologies has been waived. The petition lacks items #4 and # 8.

In regard to item 4, petitioner should note that the instant petition includes a statement identifying the basis for the special status (i.e., whether the instant invention (1) materially enhances the quality of the environment or materially contributes to (2) development of renewable energy resources or energy conservation, or (3) greenhouse gas reduction) as required by sections II and III of the notice. However, as stated in the notice, applicant must also provide a statement pertaining to the materiality standard if the application disclosure is not clear on its face as to the materiality of the basis for the special status of the invention. This petition lacks such a statement and it is not agreed that the application on its face meets that materiality standard. In the petition, petitioner states that the claims of the application are directed to green technologies. This is not persuasive because it is not clear how the claimed reservoir with heat exchanger to cool of a computer component will contribute to enhancement of the quality of the environment and reduction of greenhouse gas emission. The claimed cooling system has nothing to do with green technologies.

In regard to item 8, petitioner should note that since no request in compliance with 37 CFR 1.219 has been made for the early publication of the present application and the publication fee $300.00 as set forth in 37 CFR 1.18(d) has not been received, the petition is dismissed.

Any reconsideration of this decision should be submitted through the USPTO electronic filing system, EFS-Web, and selecting the document description of "Petition for Green Tech Pilot" on the EFS-Web screen.

Telephone inquiries concerning this decision should be directed to Henry C. Yuen at 571-272-4856. This application will be forwarded to the Technology Center Art Unit 3747 for action in its regular turn.

/Henry C. Yuen/

Henry C. Yuen
Quality Assurance Specialist
Technology Center 3700

UNITED STATES PATENT AND TRADEMARK OFFICE

12 AUG 2010

Commissioner for Patents
United States Patent and Trademark Office
P.O. Box 1450
Alexandria, VA 22313-1450
www.uspto.gov

MARTIN D. MOYNIHAN d/b/a PRTSI, INC.
P.O. BOX 16446
ARLINGTON VA 22215

In re Application of: GOLAN, Itshak, et al.	:	
U.S. Application No.: 11/920,054	:	
PCT Application No.: PCT/IL2006/000548	:	DECISION ON RENEWED
International Filing Date: 09 May 2006	:	PETITION
Priority Date: 10 May 2005	:	
Atty Docket No.: 42216	:	
For: NOVEL GALECTIN SEQUENCES	:	
AND COMPOSITIONS ...	:	

In a decision mailed herein on 27 May 2010, applicant's original petition under 37 CFR 1.78(a)(3) was dismissed for failure to satisfy all the requirements of a grantable petition. Specifically, the amendment filed with the original petition, which sought to add a reference identifying the present application as a continuation-in-part of U.S. application number 11/907,893, was found defective because it stated that the prior-filed applications referred to therein, including U.S. application 11/907,893, were "all incorporated herein by reference." As indicated in the decision, such statement was not acceptable with respect to the added U.S application, 11/907,893 because the application as originally filed did not incorporate by reference the contents of such application.

On 01 June 2010, applicant filed the "Renewed Petition To Accept An Unintentionally Delayed Claim Of Benefit Of Earlier Filing Date And Cross-References To Other Applications (37 CFR 1.78(a)(6))" considered herein under 37 CFR 1.78(a)(3). The renewed petition was accompanied by a supplemental amendment to the first paragraph of the specification that removes the incorporation by reference statement directed to U.S. application 11/907,893. In view of this correction, the supplemental amendment satisfies the final outstanding requirement for a grantable petition under 37 CFR 1.78(a)(3) to add the delayed benefit claim directed to U.S. application 11/907,893.

Based on the above, the renewed petition is appropriately **GRANTED**

The granting of the petition to accept the delayed benefit claim to the prior-filed application under 37 CFR 1.78(a)(3 should <u>not</u> be construed as meaning that this application is entitled to the benefit of the filing date of the prior-filed application. In order for this application to be entitled to the benefit of the prior-filed application, all other requirements under 35 U.S.C. 120 and 37 CFR 1.78(a)(1) and (a)(2) must be met. Similarly, the fact that the Filing Receipt accompanying this decision on petition will include the prior-filed application should not be construed as meaning that applicant is entitled to the claim for benefit of priority to the prior filed application noted thereon. Accordingly, the examiner will,

in due course, consider this benefit claim and determine whether this application is entitled to the benefit of the earlier filing date.

A corrected Filing Receipt, which includes the priority claim directed to U.S. application 11/907,893 accompanies this decision on petition.

It is noted that the preliminary amendment filed by applicant with the original national stage application materials on 08 November 2007 (most of which is repeated in the amendment filed with the present petition) includes references to a number of additional prior-filed applications, specifically U.S. non-provisional application 11/125,263, PCT application PCT/IL03/00960, and U.S. provisional applications 60/428,691 and 60/426,041, and it indicates that these applications are "all incorporated herein by reference."

Because the preliminary amendment was timely filed prior to the expiration of the time periods specified in 37 CFR 1.78(a)(2)(ii) and (a)(5)(ii), the status of the additional benefit claims contained therein are not expressly considered in the present decision. However, the present application is a national stage of PCT/IL2006/00548 filed under 35 U.S.C. 371. The effective filing date for the application is therefore 09 May 2006, the international filing date of PCT/IL2006/00548, not 08 November 2007, the date that the U.S. national stage application was initiated. See MPEP section 1893.03(b): "It should be borne in mind that the filing date of the international stage application is also the filing date for the national stage application." Accordingly, even though the references to U.S. non-provisional application 11/125,263, PCT application PCT/IL03/00960, and U.S. provisional applications 60/428,691 and 60/426,041 were contained in the preliminary amendment filed with the original national stage materials, such amendment is not acceptable if it incorporates by reference material that was not expressly incorporated by reference in the international application on the international filing date.

A review of PCT/IL2006/000548 reveals that the international application did not expressly incorporate by reference the contents of U.S. non-provisional application 11/125,263, PCT application PCT/IL03/00960, or U.S. provisional applications 60/428,691 and 60/426,041. Accordingly, upon subsequent review, the examiner may object to the incorporation by reference language included in such amendment based on the potential addition to the present national stage application of subject matter beyond that contained in the international stage application.

Any questions concerning this decision may be directed to Richard M. Ross at (571) 272-3296. All other inquiries concerning either the examination procedures or status of the application should be directed to the Technology Center.

Bryan Lin

Bryan Lin
Legal Examiner
Office of PCT Legal Administration

ATTACHMENT: Corrected Filing Receipt

UNITED STATES PATENT AND TRADEMARK OFFICE

Commissioner for Patents
United States Patent and Trademark Office
P.O. Box 1450
Alexandria, VA 22313-1450
www.uspto.gov

November 1, 2011

MARTIN D. MOYNIHAN d/b/a PRTSI, INC.
P.O. BOX 16446
ARLINGTON VA 22215

Re Application of
GOLAN, ITSHAK, ET Al
Application: **11/920054**
Filed: **11/08/2007**
Attorney Docket No: **42216**

: **DECISION ON PETITION**
: **ACCEPTANCE OF COLOR**
: **DRAWINGS**

This is a decision on the Petition to Accept Color Drawings under 37 C.F.R 1.84 (a) (2), received in the United States Patent and Trademark Office (USPTO) November 8, 2007.

The petition is **GRANTED**.
A grantable petition under 37 C.F.R. 1.84(a) (2) must be accompanied by the following.

1. The fee set forth under 37 C.F.R. 1.17(h),
2. Three (3) sets of the color drawings in question, or (1) set if filed via EFS, and
3. The specification containing the following language as the first paragraph in that portion of the specification relating to the brief description of the drawings.

   "The file of this patent contains at least one drawing executed in color. Copies of this patent with color drawing(s) will be provided by the Patent and Trademark Office upon request and payment of the necessary fee."

The petition was accompanied by all of the required fees and drawings. The specification contains the appropriate language. Therefore, the petition is GRANTED.

Telephone inquires relating to this decision may be directed to the undersigned in the Office of Data Management at 571-272-4200.

/Bernadette Queen/
Quality Control Specialist
Office of Data Management
Publications Branch

UNITED STATES PATENT AND TRADEMARK OFFICE

Commissioner for Patents
United States Patent and Trademark Office
P.O. Box 1450
Alexandria, VA 22313-1450
www.uspto.gov

Date: 11/18/10

Patent No. : 7741852 B2
Ser. No. : 11/920,085
Inventor(s) : **Watanabe , et al.**
Issued : **June 22, 2010**
Title : **IONIZATION VACUUM GAUGE**
Docket No. : **R-0701K**

Re: Request for Certificate of Correction

Consideration has been given your request for the issuance of a certificate of correction for the above-identified patent under the provisions of Rule(s) 1.322 and/or 1.323.

Assignees' names and addresses (assignment data) printed in a patent, are based *solely* on information supplied in the appropriate space for identifying the assignment data, i.e., item 3 of the Issue Fee Transmittal Form PTOL-85B. Granting of a request under 37 CFR 3.81(b) is required to correct applicant's error providing ***incorrect or erroneous*** assignment data, *before* issuance of a Certificate of Correction, under 37 CFR 1.323 *(see Manual of Patent Examining Procedures (M.P.E.P) Chp.1400, sect. 1481).* This procedure is required *at any time after the issue fee is paid*, including after issuance of the patent.

In view of the foregoing, your request, in this mater, is hereby denied.

A request to correct the Assignee under 37 CFR 3.81(b) should include:

A. **the processing fee set forth in 37 CFR 1.17(i) (currently $130);**
B. a statement that the failure to include the correct assignee name on the PTOL-85B was inadvertent; and
C. a copy of the Notice of Recordation of Assignment Document, reflecting the reel and frame number where the assignment(s) is recorded and/or reflecting proof of *the date* the assignment was submitted for recordation.

In the Request, Applicant(s) may request that the file be forwarded to Certificates of Correction Branch, for issuance of a Certificate of Correction, if the Request is granted.

Any request under 37 CFR 3.81(b) should be directed to the following address or facsimile number:

By mail: Mail Stop PETITIONS

Commissioner for Patents
Post Office Box 1450
Alexandria, VA 22313-1450

By hand: Customer Service Window
Mail Stop Petitions
Randolph Building
401 Dulany Street
Alexandria, VA 22314

By fax: (571) 273-0025
ATTN: Office of Petitions

If a fee (currently $100) was previously submitted for consideration of a Request for Certificate of Correction, under CFR 1.323, to correct assignment data, no additional fee is required.

Lamonte M. Newsome

Lamonte M. Newsome
For Mary Diggs, Supervisor
Decisions & Certificates
Of Correction Branch
(571) 272-3421 or (703) 305-8309

Kubotera & Associates, LLC
200 Daingerfield Rd
Suite 202
Alexandria VA 22314

LMN

UNITED STATES PATENT AND TRADEMARK OFFICE

Commissioner for Patents
United States Patent and Trademark Office
P.O. Box 1450
Alexandria, VA 22313-1450
www.uspto.gov

Kubotera & Associates, LLC
200 Daingerfield Rd
Suite 202
Alexandria VA 22314

MAILED
FEB 08 2011
OFFICE OF PETITIONS

In re Patent No. 7,741,852 :
Issue Date: June 22, 2010 :
Application No. 11/920,085 : ON PETITION
Filed: November 8, 2007 :
Attorney Docket No. R-0701K :

This is a decision on the petition filed December 9, 2010, under 37 CFR 3.81(b) to correct the name of the assignee on the front page of the above-identified patent by way of a certificate of correction.

The request is **DISMISSED**.

37 CFR 3.81(b), effective June 25, 2004, reads:

> *After payment of the issue fee:* Any request for issuance of an application in the name of the assignee submitted after the date of payment of the issue fee, and any request for a patent to be corrected to state the name of the assignee, must state that the assignment was submitted for recordation as set forth in § 3.11 before issuance of the patent, and must include a request for a certificate of correction under § 1.323 of this chapter (accompanied by the fee set forth in § 1.20(a) and the processing fee set forth in § 1.17(h) of this chapter.

The request under 37 CFR 3.81(b) was not accompanied by a required petition fee of $130. Petitioner has failed to comply with the provisions of 37 CFR 3.81(b), the request cannot be granted at this time.

Further correspondence with respect to this matter should be addressed as follows:

By mail: Mail Stop PETITIONS
Commissioner for Patents
Post Office Box 1450
Alexandria, VA 22313-1450

By hand: Customer Service Window
Mail Stop Petitions
Randolph Building
401 Dulany Street
Alexandria, VA 22314

By fax: (571) 273-8300
ATTN: Office of Petitions

Telephone inquiries related to this decision should be directed to the Kimberly Inabinet at (571) 272-4618.

/Carl Friedman/
Carl Friedman
Petitions Examiner
Office of Petitions

UNITED STATES PATENT AND TRADEMARK OFFICE

Commissioner for Patents
United States Patent and Trademark Office
P.O. Box 1450
Alexandria, VA 22313-1450
www.uspto.gov

MAILED
MAY 02 2011
OFFICE OF PETITIONS

Kubotera & Associates, LLC
200 Daingerfield Rd
Suite 202
Alexandria VA 22314

Patent No. 7,741,852	:	
Issue Date: June 22, 2010	:	
Application No. 11/920,085	:	ON PETITION
Filed: November 8, 2007	:	
Attorney Docket No. R-0701K	:	

This is a decision on the renewed petition filed February 9, 2011, which is being treated as a request under 37 CFR 3.81(b) to correct the name of the assignee on the front page of the above-identified patent by way of a Certificate of Correction.

The petition is **GRANTED**.

The patent file is being forwarded to the Certificates of Correction Branch for issuance of the requested Certificate of Correction.

Telephone inquiries concerning this decision may be directed to the Kimberly Inabinet at (571) 272-4618. Inquiries regarding the issuance of a certificate of correction should be directed to the Certificate of Correction Branch at (703) 756-1814.

/Carl Friedman/
Carl Friedman
Petitions Examiner
Office of Petitions

UNITED STATES PATENT AND TRADEMARK OFFICE

Commissioner for Patents
United States Patent and Trademark Office
P.O. Box 1450
Alexandria, VA 22313-1450
www.uspto.gov

MAILED
DEC 13 2011
OFFICE OF PETITIONS

KENNETH E. DARNELL
1975 Grimsley Road
Gordon AL 36343

In re Application of	:	
James P. Yates et al.	:	
Application No. 11/920,105	:	DECISION ON PETITION
Filed: August 6, 2009	:	TO WITHDRAW
Attorney Docket No. PWV-P012-US	:	FROM RECORD
	:	

This is a decision on the Request to Withdraw as attorney or agent of record under 37 C.F.R. § 1.36(b), filed November 2, 2011.

The request is **NOT APPROVED.**

The Office will no longer accept address changes to a new practitioner or law firm filed with a Request, absent the filing of a power of attorney to the new representative. The Office will either change the correspondence address of record to the most current address information provided for the assignee of the entire interest who properly became of record under 37 CFR 3.71 or, if no assignee of the entire interest has properly been made of record under 37 CFR 3.71, the most current address information provided for the first named inventor.

Accordingly, the request to withdraw from record cannot be approved because a forwarding address was not provided. The request to change the correspondence address should be that of the: (1) the first named signing inventor; or (2) an assignee of the entire interest under 37 C.F.R 3.71. If an assignee has intervened in this application then a Statement under 37 CFR 3.73(b), or a copy of the actual assignment must be submitted with a renewed request.

According to the records of the assignment branch an assignment was recorded on August 10, 2009. Upon the filing of a renewed request, a copy of the assignment or a statement under 37 CFR 3.73(b) must be electronically filed in this application to update the application file.

All future communications from the Office will continue to be directed to the above-identified address until otherwise properly notified.

Telephone inquiries concerning this decision should be directed to the undersigned at 571-272-4618.

/Kimberly Inabinet/

Kimberly Inabinet
Petitions Examiner
Office of Petitions

UNITED STATES PATENT AND TRADEMARK OFFICE

Commissioner for Patents
United States Patent and Trademark Office
P.O. Box 1450
Alexandria, VA 22313-1450
www.uspto.gov

BIRCH STEWART KOLASCH & BIRCH
PO BOX 747
FALLS CHURCH VA 22040-0747

MAILED

DEC 17 2010

PCT LEGAL ADMINISTRATION

In re Application of
KITAZUME, et al.
Application No.: 11/920,167
PCT No.: PCT/PJ2006/309450
Int. Filing Date: 11 May 2006
Priority Date: 11 May 2005
Attorney Docket No.: 2870-0389PUS1
For: METHOD FOR DIAGNOSING ALZHEIMER'S DISEASE USING SERUM GLYCOPROTEIN AS BIOMARKER

DECISION ON PAPERS

UNDER 37 CFR 1.42

In a decision mailed by this Office on 22 June 2010, the declaration filed by applicant on behalf of deceased inventor Yuji Sato was dismissed for failure to provide a compliant oath or declaration under 37 CFR 1.497.

On 17 November 2010, applicant filed a response, including supplemental declaration, to the previous decision. The declaration submitted on 17 November 2010 identifies the deceased inventor and states the deceased inventor's country of citizenship and residence, is signed by Keiko Sato as the legal representative, states her relationship to the deceased (i.e., legal representative), provides her country of citizenship and residency and lists the other inventors on the application. Accordingly, the declaration complies with the requirements of 37 CFR 1.497(b)(2) and 37 CFR 1.42.

The request for status under 37 CFR 1.42 is **GRANTED**.

The application has an international filing date of 11 May 2006 under 35 U.S.C. 363 and will be given a date of **17 November 2010** under 35 U.S.C. 371(c)(1), (c)(2) and (c)(4).

The application will be forwarded to the National Stage Processing Branch of the Office of PCT Operations for further processing in accordance with this decision.

Derek A. Putonen
Attorney-Advisor
Office of PCT Legal Administration
Tel: (571) 272-329

UNITED STATES PATENT AND TRADEMARK OFFICE

Commissioner for Patents
United States Patent and Trademark Office
P.O. Box 1450
Alexandria, VA 22313-1450
www.uspto.gov

LANXESS CORPORATION
111 RIDC PARK WEST DRIVE
PITTSBURGH, PA 15275-1112

MAILED
FEB 14 2011
OFFICE OF PETITIONS

In re Application of :
Reinhard Langer, et al. :
Application No.: 11/920,169 : ON PETITION
Filed: November 9, 2007 :
Attorney Docket No.: P001 00040 :

This is a decision on the petition, filed February 11, 2011, under 37 CFR 1.313(c)(2) to withdraw the above-identified application from issue after payment of the issue fee.

The petition is **GRANTED**.

The above-identified application is withdrawn from issue for consideration of a submission under 37 CFR 1.114 (request for continued examination). See 37 CFR 1.313(c)(2).

Petitioner is advised that the issue fee paid on January 19, 2011, cannot be refunded. If, however, this application is again allowed, petitioner may request that it be applied towards the issue fee required by the new Notice of Allowance.[1]

Telephone inquiries relating to this decision should be directed to the undersigned at (571) 272-3204.

The application is being referred to Technology Center AU 1625 for further processing of the request for continued examination under 37 CFR 1.114 filed January 19, 2011 and for consideration of the concurrently filed Information Disclosure Statement (IDS).

/SDB/

Sherry D. Brinkley
Petitions Examiner
Office of Petitions

[1] *The request to apply the issue fee to the new Notice may be satisfied by completing and returning the new Part B – Fee(s) Transmittal Form (along with any balance due at the time of submission). Petitioner is advised that the Issue Fee Transmittal Form must be completed and timely submitted to avoid abandonment of the application.*

UNITED STATES PATENT AND TRADEMARK OFFICE

Commissioner for Patents
United States Patent and Trademark Office
P.O. Box 1450
Alexandria, VA 22313-1450
www.uspto.gov

LADAS & PARRY LLP
26 WEST 61ST STREET
NEW YORK NY 10023

MAILED

SEP 30 2010

OFFICE OF PETITIONS

In re Application of

KELKAR, Anil
Application No. 11/920,202
Filed: September 18, 2009
Attorney Docket No. **U 017078-2**

DECISION ON PETITION
TO WITHDRAW
FROM RECORD

This is a decision on the Request to Withdraw as attorney or agent of record under 37 C.F.R. § 1.36(b), filed September 03, 2010.

The request is **APPROVED**.

A grantable request to withdraw as attorney/agent of record must be signed by every attorney/agent seeking to withdraw or contain a clear indication that one attorney is signing on behalf of another/others. The Office requires the practitioner(s) requesting withdrawal to certify that he, she, or they have: (1) given reasonable notice to the client, prior to the expiration of the response period, that the practitioner(s) intends to withdraw from employment; (2) delivered to the client or a duly authorized representative of the client all papers and property (including funds) to which the client is entitled; and (3) notified the client of any responses that may be due and the time frame within which the client must respond, pursuant 37 CFR 10.40(c).

The request was signed by Janet Cord on behalf of all attorneys of record who are associated with customer No. 00140. All attorneys/agents associated with the Customer Number 00140 have been withdrawn. Applicant is reminded that there is no attorney of record at this time.

All future correspondence will be directed to the inventor Anil Kelkar at the address indicated below.

Telephone inquiries concerning this decision should be directed to Tredelle Jackson at 571-272-2783.

/Tredelle D. Jackson/
Paralegal Specialist
Office of Petitions

cc: **ANIL KELKAR**
4/1, VRUNDAVAN NO. 7
PANCHAVATI, PASHAN
PUNE 411 008, INDIA

UNITED STATES PATENT AND TRADEMARK OFFICE

Commissioner for Patents
United States Patent and Trademark Office
P.O. Box 1450
Alexandria, VA 22313-1450
www.uspto.gov

MERCK
PO BOX 2000
RAHWAY NJ 07065-0907

MAILED

JUL 21 2011

OFFICE OF PETITIONS

In re Application of	:	
Belley, et al.	:	
Application No. 11/920,275	:	ON REQUEST FOR
Filed: November 13, 2007	:	RECONSIDERATION OF
Attorney Docket Number: MC130YP	:	PATENT TERM ADJUSTMENT

This is a decision on the petition under 37 CFR 1.705(b), July 1, 2011. Applicants believe that the PTA should be accorded an additional three hundred fifty-four (354) days. Applicants request this correction on the basis that the Office will take in excess of three years to issue this patent pursuant to 37 CFR 1.702(b).

As the instant application for patent term adjustment requests reconsideration of the patent term adjustment solely as it relates to the Office's failure to issue the patent within 3 years of the filing date, the application for patent term adjustment under 37 CFR 1.705(b) is **DISMISSED as PREMATURE**.

Knowledge of the actual date the patent issues is required to calculate the amount, if any, of additional patent term patentee is entitled to for Office failure to issue the patent within 3 years. See § 1.702(b). (This is true even where a request for continued examination (RCE) was filed). The computer will not undertake the § 1.702(b) calculation until the actual date of issuance of the patent has been determined. Likewise, the computer will not calculate any further Office delay under § 1.702(a)(4) or applicant delay under § 1.704(c)(10) until the actual date of issuance of the patent has been determined. As such, the Office can not make a determination on the correctness of the patent term adjustment until the patent has issued.

Requesting reconsideration of the patent term adjustment to be indicated on the patent under 37 CFR 1.705(b) based on the initial determination of patent term adjustment and a projected issuance date of the patent (or even the filing date of the request for continued examination) is premature. Accordingly, it is appropriate to dismiss as premature such a request.

Rather than file a request for reconsideration of patent term adjustment under 37 CFR 1.705(b) contesting the 37 CFR 1.702(b) calculation at the time of the mailing of the notice of allowance, applicants are advised that they may wait until the time of the issuance of the patent and file a request for reconsideration of the patent term adjustment pursuant to 37 CFR 1.705(d). As the USPTO does not calculate the amount of time earned pursuant to 37 CFR 1.702(b) until the time of the issuance of the patent, the Office will consider any request for reconsideration of the patent term adjustment due to an error in the calculation of 37 CFR 1.702(b) to be timely if the request for reconsideration is filed within two months of the issuance of the patent. However, as to all other bases for contesting the initial determination of patent term adjustment received with the notice of allowance, applicant must timely file an application for patent term adjustment prior to the payment of the issue fee[1].

In view thereof, the correct determination of PTA prior to issuance is **five hundred seventy-seven (577) days.**

Receipt of the $200.00 fee set forth in 37 CFR 1.18(e) is acknowledged.

The application is being forwarded to the Office of Data Management to await applicants' submission of the issue fee in response to Notice of Allowance mailed April 29, 2011.

Telephone inquiries specific to this decision should be directed to the undersigned at (571) 272-3207.

/Cliff Congo/

Cliff Congo
Petitions Attorney
Office of Petitions

---

[1] For example, if applicant disputes both the calculation of patent term adjustment under 37 CFR 1.702(a)(1) for Office failure to mail a first Office action or notice of allowance not later than fourteen months after the date on which the application was filed and under 37 CFR 1.702(b) for Office failure to issue a patent within three years of the actual filing date of the application, then applicant must still timely file an application for patent term adjustment prior to the payment of the issue fee to contest the calculation of Office delay in issuing a first Office action or notice of allowance. See 37 CFR 1.705(b) and 35 U.S.C. 154(b)(3)(B). A dispute as to the calculation of the §1.702(a)(1) period raised on request for reconsideration of patent term adjustment under 37 CFR 1.705(d) will be dismissed as untimely filed.

UNITED STATES PATENT and TRADEMARK OFFICE

COMMISSIONER FOR PATENTS
UNITED STATES PATENT AND TRADEMARK OFFICE
P.O BOX 1450
ALEXANDRIA, VA 22313-1450
www.uspto.gov

NIXON PEABODY LLP
300 S. Riverside Plaza, 16th Floor
CHICAGO IL 60606-6613

MAILED
APR 13 2011
PCT LEGAL ADMINISTRATION

In re Application of	:	DECISION ON
EDELBROCK, Andrew J.	:	
Application No.: 11/920,301	:	
PCT No.: PCT/US2006/019796	:	
Int. Filing Date: 22 May 2006	:	PETITION UNDER
Priority Date: 24 May 2005	:	
Attorney Docket No.: MSE-2758	:	
For: Sensor Package With An... Circuit	:	37 CFR 1.181

This decision is in response to the "Request For Corrected Notice Of Acceptance of Applications" filed 13 January 2011, which is being treated as a petition under 37 CFR 1.181 requesting that the correct date of completion of all USC 371 requirements be changed from 11/22/08 to 11/13/07

BACKGROUND

On 22 May 2006, this international application was filed, claiming an earliest priority date of 22 May 2005. The deadline for paying the basic national fee in the United States under 35 U.S.C. 371 and 37 CFR 1.495 was 24 November 2007.

On 13 November 2007, applicant filed a transmittal letter for entry into the national stage in the United States which was accompanied by, inter alia, the requisite basic national fee as required by 35 U.S.C. 371(c)(1), a copy of the international application. 35 U.S.C. 371(c)(2), and an executed declaration 35 U.S.C. 371(c)(4).

On 22 December 2008, the USPTO mailed a "NOTICE OF ACCEPTANCE OF APPLICATION UNDER 35 U.S.C. 371 AND 37 C.F.R. 1.495 (Form PCT/DO/EO/903)," indicating that date of receipt of 35 U.S.C. 371 (c)(1), (c)(2), and (c)(4) requirements is 13 November 2007, and a date of completion of all 35 USC 371 requirements of 22 November 2008.

On 13 January 2011, applicant filed the current petition pursuant 37 CFR 1.181 requesting a corrected filing receipt, stating that the date of completion of all 35 USC 371 requirements is 13 November 2007.

DISCUSSION

The date that applicant competed the requirements under section (c) of 35 USC 371 is 24 November 2007.

Applicant did not elect in the transmittal letter an express request to begin national examination procedure on 13 November 2007[1] but rather delayed examination until the expiration of the applicable time limit set in 35 USC 371(b), which would be on 24 November 2007.

Since applicant did not choose express request commencement under section (f) of 35 USC 371 (35 USC 371(f)), then section (b) of 35 USC 371 applies for national stage commencement of this application. Accordingly, 24 November 2007 is the date of completion of all 35 USC 371 requirements because it is the date that the applicable sections of 35 USC 371 were met.

Consequently, the Notification of Acceptance (Form PCT/DO/EO/903) mailed on 22 December 2008 was erroneous because it indicated the Date of Completion of all 35 USC 371 Requirements is 11/22/2008 as the correct dates is 11/24/2007 as discussed above. As a result, this Notice is VACATED with the mailing of this decision.

DECISION

The petition under 37 CFR 1.181 to change the date of completion of all USC 371 requirements to 11/13/2007 is **DISMISSED** without prejudice.

The Notification of Acceptance (Form PCT/DO/EO/903) mailed on 22 December 2008 is **VACATED** with the mailing of this decision.

A new Notification of Acceptance (Form PCT/DO/EO/903) will be mailed in accordance with this decision

The 35 USC 371(c)(1), (c)(2), and (c)(4) date of this application is **13 November 2007** and the Date of Completion of all 35 USC 371 Requirements **24 November 2007**.

If reconsideration of the merits of the petition under 37 CFR 1.181 is desired, applicant must file a request for reconsideration within **TWO (2) MONTHS** from the mail date of this Decision. Any reconsideration request should include a cover letter entitled "Renewed Petition Under 37 CFR 1.181." Extensions of time are available under 37 CFR 1.136(a).

[1] The date of receipt of 35 USC 371(c)(1), (c)(2), and (c)(4) requirements.

Any further correspondence with respect to this matter may be filed electronically via EFS-Web selecting the document description "Petition for review and processing by the PCT Legal Office" or by mail addressed to Mail Stop PCT, Commissioner for Patents, Office of PCT Legal Administration, P.O. Box 1450, Alexandria, Virginia 22313-1450, with the contents of the letter marked to the attention of the Office of PCT Legal Administration.

Rafael Bacares
PCT Legal Examiner
PCT Legal Office
Telephone: (571) 272-3276
Facsimile: (571) 273-0459

UNITED STATES PATENT AND TRADEMARK OFFICE

Commissioner for Patents
United States Patent and Trademark Office
P.O. Box 1450
Alexandria, VA 22313-1450
www.uspto.gov

NIXON PEABODY LLP
300 S. RIVERSIDE PLAZA, 16TH FLOOR
CHICAGO IL 60606-6613

MAILED
APR 19 2011
OFFICE OF PETITIONS

In re Application of	:	
Andrew J. Edelbrock	:	
Application Number: 11/920,301	:	DECISION ON APPLICATION
Filed: November 13, 2007	:	FOR
Attorney Docket No. MSE-2758	:	PATENT TERM ADJUSTMENT

This is a decision on the APPLICATION FOR PATENT TERM ADJUSTMENT, filed on January 13, 2011, which is treated as a petition under 37 CFR 1.705(b), requesting that the determination of patent term adjustment at the mailing of the notice of allowance be corrected from 0 days to 230 days.

The application for patent term adjustment patent is **GRANTED TO THE EXTENT INDICATED**.

The Office has updated the PALM and PAIR screens to reflect that the Patent Term Adjustment (PTA) at the time of the mailing of the Notice of Allowance is 217 days. A copy of the updated PAIR screen, showing the revised determination, is enclosed.

On November 4, 2010, the Office mailed a Determination of Patent Term Adjustment under 35 U.S.C. 154(b) in the above-identified application. Applicant was advised that the patent term adjustment to date was 0 days (0 days of Office delay and 31 days of applicant delay).

The subject application for patent term adjustment was timely filed on January 13, 2011.[1]

[1] A review of Office PALM records indicates that the issue fee was paid on January 20, 2011.

Applicant asserts that the period of adjustment for Office delay pursuant to 37 CFR 1.702(a)(1) should be 261 days. Specifically, applicant avers that the requirements of 35 U.S.C. 371(c) were completed on November 13, 2007, and that the Office action mailed on October 1, 2009, was therefore mailed 14 months and 261 days after the day after the date the requirements of 35 U.S.C. 371(c) were completed.

37 CFR 1.703(a)(1) states that the period of adjustment for Office delay is the number of days, if any, in the period beginning on the day after the date that is fourteen months after the date on which the application was filed under 35 U.S.C. 111(a) or fulfilled the requirements of 35 U.S.C. 371 and ending on the date of mailing of either an action under 35 U.S.C. 132 or a notice of allowance under 35 U.S.C. 151, whichever occurs first.

The priority date in this application is May 24, 2005. Applicant did not file an express request under 35 U.S.C. 371(f). Accordingly, the date which is 30 months from the priority date is November 24, 2007. As November 24, 2007, fell on a Saturday, the commencement date is shifted to Monday, November 26, 2007. *See* PCT Rule 80.5. Additionally, as applicant completed all 35 U.S.C. 371(c) requirements on filing the national stage prior to commencement, the completion date is also shifted to November 26, 2007.

Accordingly, the period of adjustment under 37 CFR 1.702(a)(1) is the period beginning on January 27, 2009, the day after the date 14 months after the date of completion of all requirements under 35 U.S.C. 371. An Office action was mailed on October 1, 2009, 14 months and 248 days after the day after the date the application completed the requirements of 35 U.S.C. 371. The period of adjustment under 37 CFR 1.702(a)(1) is therefore 248 days.

The patent term adjustment at the time of the mailing of the Notice of Allowance and Fee(s) Due is 217 days (248 days of Office delay less 31 days of applicant delay).

Applicant states the patent is not subject to a terminal disclaimer.

The Office acknowledges submission of the $200.00 fee set forth in 37 CFR 1.18(e). No additional fees are required.

The application is being forwarded to the Office of Data Management for issuance of a patent. The patent term adjustment indicated on the patent (as shown on the Issue Notification mailed about three weeks prior to patent issuance) will include any additional adjustment accrued both for Office delay in issuing the patent more than four months after payment of the issue fee and satisfaction of all outstanding requirements, and for the Office taking in excess of three years to issue the patent (to the extent that the three-year period does not overlap with periods already accorded).

Telephone inquiries specific to this matter should be directed to the undersigned at (571) 272-3231.

D Wood

Douglas I. Wood
Senior Petitions Attorney
Office of Petitions

Encl: Updated PAIR Calculation

11/920,301	SENSOR PACKAGE WITH AN INTERIM AUTO-CALIBRATION CIRCUIT	04-19-2011::11:12:40

Patent Term Adjustments

Patent Term Adjustment (PTA) for Application Number: 11/920,301

Filing or 371(c) Date:	11-13-2007	Overlapping Days Between {A and B} or {A and C}:	0
Issue Date of Patent:	-	Non-Overlapping USPTO Delays:	0
A Delays:	0	PTO Manual Adjustments:	248
B Delays:	0	Applicant Delays:	31
C Delays:	0	Total PTA Adjustments:	217

Patent Term Adjustment History **Explanation Of Calculations**

Number	Date	Contents Description	PTO(Days)	APPL (Days)	Start
66	04-19-2011	Adjustment of PTA Calculation by PTO	248		0
45	11-04-2010	Mail Notice of Allowance			0
44	11-04-2010	Issue Revision Completed			0
40	11-03-2010	Allowed Case Returned to the Examiner for Clerical Processing			0
39	11-03-2010	Document Verification			0
38	11-03-2010	Notice of Allowance Data Verification Completed			0
37	11-03-2010	Case Docketed to Examiner in GAU			0
36	11-03-2010	Examiner's Amendment Communication			0
35	08-17-2010	Examiner Interview Summary Record (PTOL - 413)			0
34	11-03-2010	Allowability Notice			0
31	10-06-2010	Case Docketed to Examiner in GAU			0
30	05-05-2010	Mail Final Rejection (PTOL - 326)			0
29	05-05-2010	Final Rejection			0
26	03-02-2010	Date Forwarded to Examiner			0
25	02-01-2010	Response after Non-Final Action		31	23
24	02-01-2010	Request for Extension of Time - Granted			0
23	10-01-2009	Mail Non-Final Rejection			0
22	09-29-2009	Non-Final Rejection			0
17	08-07-2009	Case Docketed to Examiner in GAU			0
16	06-02-2009	IFW TSS Processing by Tech Center Complete			0
11	04-02-2009	PG-Pub Issue Notification			0
10	01-30-2009	Filing Receipt - Corrected			0
9	01-09-2009	Application Dispatched from OIPE			0
8	11-22-2008	371 Completion Date			0
7	12-22-2008	Sent to Classification Contractor			0
6	12-22-2008	Notice of DO/EO Acceptance Mailed			0
5	12-22-2008	Filing Receipt			0

Close Window

UNITED STATES PATENT AND TRADEMARK OFFICE

Commissioner for Patents
United States Patent and Trademark Office
P.O. Box 1450
Alexandria, VA 22313-1450
www.uspto.gov

MAILED
AUG 10 2011
OFFICE OF PETITIONS

NIXON PEABODY LLP
300 S. RIVERSIDE PLAZA, 16TH FLOOR
CHICAGO IL 60606-6613

In re Patent No. 7,939,019	: DECISION ON REQUEST
Andrew J. Edelbrock	: FOR
Issue Date: 05/10/2011	: RECONSIDERATION OF
Application No. 11/920,301	: PATENT TERM ADJUSTMENT
Filed: 11/13/2007	: and
Atty Docket No.	: NOTICE OF INTENT TO ISSUE
MSE-2758	: CERTIFICATE OF CORRECTION

This is a decision on the petition filed on July 5, 2011, under 37 CFR 1.705(d) requesting that the patent term adjustment indicated on the above-identified patent be corrected to indicate that the term of the above-identified patent is extended or adjusted by three hundred eighty-two (382) days.

The petition to correct the patent term adjustment indicated on the above-identified patent to indicate that the term of the above-identified patent is extended or adjusted by three hundred eighty-two (382) days is **GRANTED**.

The Office acknowledges submission of the $200.00 fee set forth in 37 CFR 1.18(e). No additional fees are required.

The Office thanks patentees for their good faith and candor in bringing this to the attention of the Office.

The application is being forwarded to the Certificates of Correction Branch for issuance of a certificate of correction. The Office will issue a certificate of correction indicating that the term of the above-identified patent is extended or adjusted by **three hundred eighty-two (382)** days.

Telephone inquiries specific to this matter should be directed to the undersigned at (571) 272-3231.

Douglas I. Wood
Senior Petitions Attorney
Office of Petitions

Enclosure: Copy of DRAFT Certificate of Correction

UNITED STATES PATENT AND TRADEMARK OFFICE

CERTIFICATE OF CORRECTION

PATENT : 7,939,019 B2

DATED : **May 10, 2011** **DRAFT**

INVENTOR(S) : Edelbrock

It is certified that error appears in the above-identified patent and that said Letters Patent is hereby corrected as shown below:

On the cover page,

[*] Notice: Subject to any disclaimer, the term of this patent is extended or adjusted under 35 USC 154(b) by 632 days.

Delete the phrase "by 632 days" and insert – by 382 days--

UNITED STATES PATENT AND TRADEMARK OFFICE

Commissioner for Patents
United States Patent and Trademark Office
P.O. Box 1450
Alexandria, VA 22313-1450
www.uspto.gov

July 14, 2011

George W. Rauchfuss, Jr.
Ohlandt, Greeley, Ruggiero & Perle, L.L.P.
One Landmark Square, Tenth Floor
Stamford, CT 06901-2682

Patent No.	: 7,637,327 B2
Ser. No.	: 11/920,404
Inventor(s)	: Daniel Grünig
Issued	: December 29, 2009
Docket No.	: 1357.017USU
Title	: **PERCUSSIVE TOOL, IN PARTICULAR FOR SURGICAL USE**

This is in response to the PETITION FOR CERTIFICATE OF CORRECTION UNDER 37 C.F.R § 1.323 filed January 19, 2010, to correct the name of the assignee on the front page of the above-identified patent by way of a Certificate of Correction.

The request is **denied**.

Pursuant to the issue fee transmittal filed November 16, 2009, the patent issued solely in the name of assignee "Grünig & Elminger AG, Malters (CH)." Patentee files this request, requesting that the name of the assignee be corrected to add "IMT Integral Medizintechnik AG, Ennetburgen (CH)" and submits a certificate of correction for this purpose.

37 CFR 3.81 (b) effective June 25, 2004, reads:

After payment of the issue fee: Any request for issuance of an application in the name of the assignee submitted after the date of payment of the issue fee, and any request for a patent to be corrected to state the name of the assignee, must state that the assignment was submitted for recordation as set forth in §3.11 **before issuance of the patent,** and must include a request for a certificate of correction under § 1.323 of this chapter (accompanied by the fee set forth in § 1.20 (a) and the processing fee set forth in §(i) of this chapter [emphasis added]. See also MPEP1481.01

Patentee's evidence and Office records show that an assignment to "IMT Integral Medizintechnik AG, Ennetburgen (CH)" of the above-identified application was not recorded until January 22, 2010. The recording of the assignment (reel/Frame 023844/0035) occurred after issuance of the patent on December 29, 2009. At issuance, the patent was only assigned to Grünig & Elminger AG, Malters (CH).

Receipt of the required $100 certificate of correction fee and the required $130 processing fee is Acknowledged.

/Virginia Tolbert/
Virginia Tolbert
For Mary Diggs
Decisions & Certificates
of Correction Branch
(571) 272-0460 or (703) 756-1814

vt

UNITED STATES PATENT AND TRADEMARK OFFICE

Commissioner for Patents
United States Patent and Trademark Office
P.O. Box 1450
Alexandria, VA 22313-1450
www.uspto.gov

MAILED
MAY 27 2011
OFFICE OF PETITIONS

JONES DAY
222 EAST 41ST ST
NEW YORK, NY 10017

In re Application of	:	
Tian Xu, et. al.	:	
Application No. 11/920,410	:	DECISION ON PETITION
Filed: January 7, 2010	:	TO WITHDRAW FROM
Attorney Docket No. 11579-003-999	:	RECORD

This is a decision on the Request to Withdraw as attorney or agent of record under 37 CFR §§ 1.36(b) or 10.40 filed May 9, 2011.

The request is **APPROVED**.

The request was signed by Adriane M. Antler on behalf of himself and all the attorneys/agents associated with Customer Number 20583. Therefore, Adriane M. Antler and all the attorneys/agents associated with Customer Number 20583 have been withdrawn.

Applicant is reminded that there are no attorneys/agents of record at this time.

There is an outstanding Office action mailed April 13, 2011, that requires a reply from the applicant.

All future communications from the Office will be directed to the address listed below until otherwise properly notified by the applicant.

Telephone inquiries concerning this decision should be directed to the undersigned at (571) 272-3226.

Andrea Smith
Petitions Examiner
Office of Petitions

cc: Fudan University
Attention: Prof. Xingao Gong
220 Han Dan Road
Shanghai, 200000
CHINA

UNITED STATES PATENT AND TRADEMARK OFFICE

UNITED STATES DEPARTMENT OF COMMERCE
United States Patent and Trademark Office
Address: COMMISSIONER FOR PATENTS
P.O. Box 1450
Alexandria, Virginia 22313-1450
www.uspto.gov

APPLICATION NUMBER	FILING OR 371(C) DATE	FIRST NAMED APPLICANT	ATTY. DOCKET NO./TITLE
11/920,410	01/07/2010	Tian Xu	11579-003-999

CONFIRMATION NO. 6192

POWER OF ATTORNEY NOTICE

20583
JONES DAY
222 EAST 41ST ST
NEW YORK, NY 10017

OC000000047929859

Date Mailed: 05/27/2011

NOTICE REGARDING CHANGE OF POWER OF ATTORNEY

This is in response to the Power of Attorney filed 05/09/2011.

- The withdrawal as attorney in this application has been accepted. Future correspondence will be mailed to the new address of record. 37 CFR 1.33.

/amsmith/

Office of Data Management, Application Assistance Unit (571) 272-4000, or (571) 272-4200, or 1-888-786-0101

UNITED STATES PATENT AND TRADEMARK OFFICE

Commissioner for Patents
United States Patent and Trademark Office
P.O. Box 1450
Alexandria, VA 22313-1450
www.uspto.gov

ROBERT D. SHEDD, PATENT OPERATIONS
THOMSON LICENSING LLC
PO BOX 5312
PRINCETON, NJ 08543-5312

MAILED
JUN 15 2011
OFFICE OF PETITIONS

In re Application of	:	
Benoit Racine, et al.	:	
Application No. 11/920,446	:	DECISION GRANTING PETITION
Filed: June 22, 2009	:	UNDER 37 CFR 1.313(c)(2)
Attorney Docket No. PF050093	:	

This is a decision on the petition under 37 CFR 1.313(c)(2), filed June 14, 2011, to withdraw the above-identified application from issue after payment of the issue fee.

The petition is **GRANTED**.

The above-identified application is withdrawn from issue for consideration of a submission under 37 CFR 1.114 (request for continued examination). *See* 37 CFR 1.313(c)(2).

Petitioner is advised that the issue fee paid on June 7, 2011 cannot be refunded. If, however, this application is again allowed, petitioner may request that it be applied towards the issue fee required by the new Notice of Allowance.[1]

Telephone inquiries regarding this decision should be directed to undersigned at (571) 272-1642. All other inquiries concerning the examination or status of this application should be directed to the Technology Center.

This application is being referred to Technology Center AU 2879 for processing of the request for continued examination under 37 CFR 1.114 and for consideration of the concurrently filed information disclosure statement.

/AMW/
April M. Wise
Petitions Examiner
Office of Petitions

[1] *The request to apply the issue fee to the new Notice may be satisfied by completing and returning the new Part B – Fee(s) Transmittal Form (along with any balance due at the time of submission). Petitioner is advised that the Issue Fee Transmittal Form must be completed and timely submitted to avoid abandonment of the application.*

United States Patent and Trademark Office

03 SEP 2010

Commissioner for Patents
United States Patent and Trademark Office
P.O. Box 1450
Alexandria, VA 22313-1450
www.uspto.gov

VINSON & ELKINS, L.L.P.
FIRST CITY TOWER
1001 FANNIN STREET, SUITE 2500
HOUSTON TX 77002-6760

In re Application of	:	
Wu et al.	:	
Application No.: 11/920,456	:	DECISION
PCT No.: PCT/US2006/016779	:	
Int. Filing Date: 04 May 2006	:	ON
Priority Date: 06 May 2005	:	
Attorney Docket No.: KER020/4-036US/32001	:	PETITION
For: Hydratable Keratin Compositions	:	

This is in response to the renewed petition under 37 CFR 1.47(a) filed on 21 June 2010.

DISCUSSION

In a Decision mailed on 21 April 2010, the renewed petition under 37 CFR 1.47(a) filed on 17 February 2010 was dismissed, without prejudice, because requirements (2) and (4) had not been satisfied.

Regarding requirement (2), the Decision mailed on 21 April 2010 indicated that, to the extent the available evidence suggested that the non-signing inventors may have moved, it would not be appropriate to construe the failure to return an executed declaration as a "refusal" within the meaning of 37 CFR 1.47(a). Rather, under such circumstances, petitioner should provide a showing that these non-signing inventors could not be found or reached after diligent effort. This would entail proffering evidence of efforts undertaken to find the inventors even if/though they had moved.

In response, petitioner indicates that it "is not clear whether the inventors have refused to sign, or if they have simply moved from their last known address, and we are unable to locate them. The certified mail receipts have been returned, but were signed by other individuals than addressee." Petitioner asserts that "we have made diligent efforts to contact each of these inventors at their last known address." Petitioner appears to imply that the inventors could not be found or reached after diligent effort. If this interpretation is in fact correct, a showing of the type described at MPEP 409.03(d) would be required. Specifically, in that instance, petitioner should provide first-hand statement(s) by those individual(s) who undertook to find or reach the inventors, as well as copies of appropriate documentary evidence (e.g., relevant copies of telephone directory pages, Internet search terms and results, voter registration or property tax rolls, etc). Petitioner only states, in general terms, that contact was made with Dr. Goff and that "an internet search" was conducted, without providing adequate details or substantiation.

Concerning requirement (4), petitioner has not yet provided an acceptable declaration, as discussed previously.

DECISION

The petition under 37 CFR 1.47(a) is **DISMISSED**, without prejudice.

If reconsideration on the merits of this petition is desired, a proper response must be filed within **TWO (2) MONTHS** from the mail date of this decision. Any reconsideration request should include a cover letter entitled "Renewed Petition Under 37 CFR 1.47(a)." No additional petition fee is required. Extensions of time may be obtained under 37 CFR 1.136(a). Failure to timely file a proper response will result in **ABANDONMENT**.

Any further correspondence with respect to this matter may be filed electronically via EFS-Web selecting the document description "Petition for review and processing by the PCT Legal Office" or by mail addressed to Mail Stop PCT, Commissioner for Patents, Office of PCT Legal Administration, P.O. Box 1450, Alexandria, Virginia 22313-1450, with the contents of the letter marked to the attention of the Office of PCT Legal Administration.

/George Dombroske/
George Dombroske
PCT Legal Examiner
Office of PCT Legal Administration
Tel: (571) 272-3283

United States Patent and Trademark Office

07 SEP 2010

Commissioner for Patents
United States Patent and Trademark Office
P.O. Box 1450
Alexandria, VA 22313-1450
www.uspto.gov

VINSON & ELKINS, L.L.P.
FIRST CITY TOWER
1001 FANNIN STREET, SUITE 2500
HOUSTON TX 77002-6760

In re Application of	:	
Wu et al.	:	
Application No.: 11/920,456	:	DECISION
PCT No.: PCT/US2006/016779	:	
Int. Filing Date: 04 May 2006	:	ON
Priority Date: 06 May 2005	:	
Attorney Docket No.: KER020/4-036US/32001	:	PETITION
For: Hydratable Keratin Compositions	:	

This is in response to the renewed petition under 37 CFR 1.47(a) filed on 21 June 2010.

DISCUSSION

In a Decision mailed on 21 April 2010, the renewed petition under 37 CFR 1.47(a) filed on 17 February 2010 was dismissed, without prejudice, because requirements (2) and (4) had not been satisfied.

Regarding requirement (2), the Decision mailed on 21 April 2010 indicated that, to the extent the available evidence suggested that the non-signing inventors may have moved, it would not be appropriate to construe the failure to return an executed declaration as a "refusal" within the meaning of 37 CFR 1.47(a). Rather, under such circumstances, petitioner should provide a showing that these non-signing inventors could not be found or reached after diligent effort. This would entail proffering evidence of efforts undertaken to find the inventors even if/though they had moved.

In response, petitioner indicates that it "is not clear whether the inventors have refused to sign, or if they have simply moved from their last known address, and we are unable to locate them. The certified mail receipts have been returned, but were signed by other individuals than addressee." Petitioner asserts that "we have made diligent efforts to contact each of these inventors at their last known address." Petitioner appears to imply that the inventors could not be found or reached after diligent effort. If this interpretation is in fact correct, a showing of the type described at MPEP 409.03(d) would be required. Specifically, in that instance, petitioner should provide first-hand statement(s) by those individual(s) who undertook to find or reach the inventors, as well as copies of appropriate documentary evidence (e.g., relevant copies of telephone directory pages, Internet search terms and results, voter registration or property tax rolls, etc). Petitioner only states, in general terms, that contact was made with Dr. Goff and that "an internet search" was conducted, without providing adequate details or substantiation.

Concerning requirement (4), petitioner has not yet provided an acceptable declaration, as discussed previously.

DECISION

The petition under 37 CFR 1.47(a) is **DISMISSED**, without prejudice.

If reconsideration on the merits of this petition is desired, a proper response must be filed within **TWO (2) MONTHS** from the mail date of this decision. Any reconsideration request should include a cover letter entitled "Renewed Petition Under 37 CFR 1.47(a)." No additional petition fee is required. Extensions of time may be obtained under 37 CFR 1.136(a). Failure to timely file a proper response will result in **ABANDONMENT**.

Any further correspondence with respect to this matter may be filed electronically via EFS-Web selecting the document description "Petition for review and processing by the PCT Legal Office" or by mail addressed to Mail Stop PCT, Commissioner for Patents, Office of PCT Legal Administration, P.O. Box 1450, Alexandria, Virginia 22313-1450, with the contents of the letter marked to the attention of the Office of PCT Legal Administration.

/George Dombroske/
George Dombroske
PCT Legal Examiner
Office of PCT Legal Administration
Tel: (571) 272-3283

United States Patent and Trademark Office

Commissioner for Patents
United States Patent and Trademark Office
P.O. Box 1450
Alexandria, VA 22313-1450
www.uspto.gov

MAILED

JAN 14 2011

PCT LEGAL ADMINISTRATION

VINSON & ELKINS, L.L.P.
FIRST CITY TOWER
1001 FANNIN STREET, SUITE 2500
HOUSTON TX 77002-6760

In re Application of
Wu et al.
Application No.: 11/920,456
PCT No.: PCT/US2006/016779
Int. Filing Date: 04 May 2006
Priority Date: 06 May 2005
Attorney Docket No.: KER020/4-036US/32001
For: Hydratable Keratin Compositions

DECISION ON PETITION

This is in response to the renewed petition under 37 CFR 1.47(a) filed on 03 November 2010.

DISCUSSION

In a Decision mailed on 03 September 2010 (a copy of which was mailed on 07 September 2010), the renewed petition under 37 CFR 1.47(a) filed on 21 June 2010 was dismissed, without prejudice, because requirements (2) and (4) had not been satisfied.

In response, petitioner has provided declarations signed by inventors Wu, Li and Wicks. On 20 October 2009, applicants filed declarations signed by inventors Smith and Morgan. Taken together, these declarations satisfy the requirements of 37 CFR 1.497(a) and (b). Since the formerly non-signing inventors have now executed the application, the petition under 37 CFR 1.47(a) is now moot.

DECISION

The petition under 37 CFR 1.47(a) is **DISMISSED AS MOOT**, without prejudice.

The surcharge under 37 CFR 1.492(h) is being charged to Deposit Account 22-0365, as authorized in the petition.

This application is being returned to the Office of Patent Application Processing.. Its date under 35 U.S.C. 371(c)(1), (2) and (4) is **03 November 2010**.

/George Dombroske/
George Dombroske
PCT Legal Examiner
Office of PCT Legal Administration
Tel: (571) 272-3283