UNITED STATES PATENT AND TRADEMARK OFFICE

Commissioner for Patents
United States Patent and Trademark Office
P.O. Box 1450
Alexandria, VA 22313-1450
www.uspto.gov

MARSHALL, GERSTEIN & BORUN LLP
233 SOUTH WACKER DRIVE
6300 WILLIS TOWER
CHICAGO IL 60606-6357

MAILED

JUN 17 2011

OFFICE OF PETITIONS

In re Patent No. 7,802,943 :
Issued: September 28, 2010 :
Application No. 11/972,367 : ON PETITION
Filed: January 10, 2008 :
Attorney Docket Number: 31293/43477 :

This is a decision on the petition, filed under 37 CFR 1.323 on March 25, 2011, to correct the assignee's information on the front of the Patent.

The petition is **DISMISSED**.

Petitioner seeks to correct an inadvertent errror on the face of the patent. Accordingly, petitioner requests that a certificate of correction be issued to reflect the city and state information for the assignee on the front page of the Letters Patent.

Petitioner is advised that while a certificate of correction, and fee, has been provided, the correction to assignee information cannot be corrected without a petition under 1.183 waiving the requirements under 37 CFR 3.81,(b)[1].

37 CFR 3.81(b), effective June 25, 2004, reads:

> *After payment of the issue fee:* Any request for issuance of an application in the name of the assignee submitted after the date of payment of the issue fee, and any request for a patent to be corrected to state the name of the assignee, must state that the assignment was submitted for recordation as set forth in § 3.11 before issuance of the patent, and must include a request for a certificate of correction under § 1.323 of this chapter (accompanied by the fee set forth in § 1.20(a) and the processing fee set forth in § 1.17(i) of this chapter.

The petition therefore is not grantable.

---

[1] *See* Official Gazette of June 22, 2004

Any request for reconsideration should be filed within **TWO MONTHS** of the date of this decision in order to be considered timely. This time period may not be extended pursuant to 37 CFR 1.136. The application will be retained in the Office of Petitions for **TWO (2) MONTHS** to await petitioner's reply to this decision.

Further correspondence with respect to this matter should be addressed as follows:

By mail: Mail Stop Petitions
Commissioner for Patents
P.O. Box 1450
Alexandria, VA 22313-1450

By FAX: (571) 273-8300
Office of Petitions

Telephone inquiries regarding this decision should be directed to the undersigned Petitions Attorney at (571) 272-3212.

Patricia Faison-Ball

Patricia Faison-Ball
Senior Petitions Attorney
Office of Petitions

SPE RESPONSE FOR CERTIFICATE OF CORRECTION

Paper No.: _____

DATE : January 26, 2011

TO SPE OF : ART UNIT 2121 SPE Albert Decady.

SUBJECT : Request for Certificate of Correction for Appl. No.: 11/972,460 Patent No.: 7,809,455 B2

Please respond to this request for a certificate of correction within 7 days.

FOR IFW FILES:

Please review the requested changes/corrections as shown in the **COCIN** document(s) in the IFW application image. No new matter should be introduced, nor should the scope or meaning of the claims be changed.

Please complete the response (see below) and forward the completed response to scanning using document code **COCX**.

FOR PAPER FILES:

Please review the requested changes/corrections as shown in the attached certificate of correction. Please complete this form (see below) and forward it with the file to:

Certificates of Correction Branch (CofC)
Randolph Square Building
2800 South Randolph Street
Arlington, VA 22206

Should claim 1 be amended as requested by applicant?
See COCIN dated 3-24-2011

Antonio Johnson

Certificates of Correction Branch
(571)272-0483 Fax – (571)270-9846

Thank You For Your Assistance

The request for issuing the above-identified correction(s) is hereby:
Note your decision on the appropriate box.

- ☐ **Approved** — **All** changes apply.
- ☐ **Approved in Part** — Specify below which changes **do not** apply.
- **xDenied** — State the reasons for denial below.

Comments: The proposed claim amendment significantly differ from the claimed examined by the Examiner. As such the amendments require new search and consideration.

_____ **SPE : /AD/ Art Unit 2121**

UNITED STATES PATENT AND TRADEMARK OFFICE
COMMISSIONER OF PATENTS AND TRADEMARKS
P.O. Box 1450
Alexandria, VA 22313-1450

July 15, 2011

Patent No.: 7,809,455 B2
Applicant : Yoshio Kanai, et al.
Issued : October 5, 2010
For : **METHOD OF CORRECTING DIE MODEL DATA**
Docket No. : **025416-00051**

Re: Request for Certificate of Correction

Consideration has been given your request for the issuance of a certificate of correction for the above-identified patent under the provisions of Rule 1.322.

Respecting the alleged error in the patent to amend claim 1. The proposed claim 1 amendment significantly differ from the claimed examined by the Examiner. As such the amendments require new search and consideration. Therefore, the correction to claim 1 as requested is disapproved.

In the foregoing, your request is hereby denied.

Further correspondence concerning this matter should be filed and directed to Decisions and Certificates of Correction Branch.

Antonio Johnson
(571)272-0483
For Mary F. Diggs, Supervisor
Decisions & Certificates of Correction Branch
(703) 756-1580

ARENT FOX LLP
1050 CONNECTICUT AVENUE, N.W.
SUITE 400
WASHINGTON DC 20036

AJ/cbn

UNITED STATES PATENT AND TRADEMARK OFFICE

UNITED STATES DEPARTMENT OF COMMERCE
United States Patent and Trademark Office
Address: COMMISSIONER FOR PATENTS
P.O. Box 1450
Alexandria, Virginia 22313-1450
www.uspto.gov

APPLICATION NO.	FILING DATE	FIRST NAMED INVENTOR	ATTORNEY DOCKET NO.	CONFIRMATION NO.
11/972,460	01/10/2008	Yoshio KANAI	025416-00051	6706

4372 7590 03/28/2012
ARENT FOX LLP
1050 CONNECTICUT AVENUE, N.W.
SUITE 400
WASHINGTON, DC 20036

EXAMINER
STEVENS, THOMAS H

ART UNIT	PAPER NUMBER
2121	

NOTIFICATION DATE	DELIVERY MODE
03/28/2012	ELECTRONIC

Please find below and/or attached an Office communication concerning this application or proceeding.

The time period for reply, if any, is set in the attached communication.

Notice of the Office communication was sent electronically on above-indicated "Notification Date" to the following e-mail address(es):

DCIPDocket@arentfox.com
IPMatters@arentfox.com
Patent_Mail@arentfox.com

UNITED STATES PATENT AND TRADEMARK OFFICE

Commissioner for Patents
United States Patent and Trademark Office
P.O. Box 1450
Alexandria, VA 22313-1450
www.uspto.gov

Anthony R. Morris
ARENT FOX LLP
1050Connecticut Ave. NW
Washington, DC 20036

In re Application of: Yoshio KANAI et al Patent No.: 7,809,455 Application No. 11/972,460 Filed: January 10, 2008 For: METHOD OF CORRECTING DIE MODEL DATA	))))))	**DECISION ON PETITION**

This is a decision on the petition, filed on 19 October 2011, under 37 C.F.R. § 1.181 requesting Technology Center Director to review the decision on the request for Certification of Correction under 37 C.F.R. § 1.322 mailed on 15 July 2011.

The petition is **GRANTED**.

Applicant asserted that a supplemental amendment to further amending claim 1 was submitted on 20 May 2010 in responding to the Examiner-initiated interview on 20 May 2010 via telephone. The supplemental amendment of 20 May 2010 was not of record.

A review of the Examiner-Initiated Interview Summary and the Notice of Allowability mailed 01 June 2010 indicates that the examiner did receive and review such a supplemental amendment.

For the above stated reason, the petition is **GRANTED**. The requested corrections as shown in the Certification of Correction submitted on 07 January 2011 have been approved.

Any inquiry concerning this decision should be directed to Vincent N. Trans whose telephone number is (571) 272-3613.

Wendy R. Garber, Director
Technology Center 2100
Computer Architecture and Software

UNITED STATES PATENT AND TRADEMARK OFFICE

Commissioner for Patents
United States Patent and Trademark Office
P.O. Box 1450
Alexandria, VA 22313-1450
www.uspto.gov

BARDMESSER LAW GROUP
10300 THORNBUSH LANE
BETHESDA MD 20184

MAILED

AUG 26 2011

OFFICE OF PETITIONS

In re Application of	:
Alexander G. Tormasov	: DECISION ON PETITION
Application No. 11/972,556	: UNDER 37 CFR 1.78(a)(3)
Filed: January 10, 2008	:
Attorney Docket No. 2230.0330004	:

This is a decision on the petition under 37 CFR 1.78(a)(3), filed July 26, 2011, to accept an unintentionally delayed claim under 35 U.S.C. § 120 for the benefit of priority to the prior-filed nonprovisional application as set forth in the Application Data Sheet (ADS) and the amendment filed concurrently with the instant petition.

The petition is **GRANTED**.

A petition for acceptance of a claim for late priority under 37 CFR 1.78(a)(3) is only applicable to those applications filed on or after November 29, 2000. Further, the petition is appropriate only after the expiration of the period specified in 37 CFR 1.78(a)(2)(ii). In addition, the petition under 37 CFR 1.78(a)(3) must be accompanied by:

(1) the reference required by 35 U.S.C. § 120 and 37 CFR 1.78(a)(2)(i) of the prior-filed application, unless previously submitted;
(2) the surcharge set forth in § 1.17(t); and
(3) a statement that the entire delay between the date the claim was due under 37 CFR 1.78(a)(2)(ii) and the date the claim was filed was unintentional. The Commissioner may require additional information where there is a question whether the delay was unintentional.

The instant nonprovisional application was filed after November 29, 2000, and the claim herein for the benefit of priority to the prior-filed nonprovisional application is submitted after expiration of the period specified by 37 CFR 1.78(a)(2)(ii). Therefore, this is a proper petition under 37 CFR 1.78(a)(3).

The petition complies with the requirements for a grantable petition under 37 CFR 1.78(a)(3) in that (1) a reference to the prior-filed nonprovisional application has been included in an amendment to the first sentence of the specification following the title and ADS, as provided by 37 CFR 1.78(a)(2)(iii); (2) the surcharge fee required by 37 CFR 1.17(t) has been submitted; and (3) the petition contains a proper statement of unintentional delay. Accordingly, having found that the instant petition for acceptance of an unintentionally delayed claim for the benefit of priority under 35 U.S.C. § 120 to the prior-filed nonprovisional application satisfies the conditions of 37 CFR 1.78(a)(3), the petition is granted.

The granting of the petition to accept the delayed benefit claim to the prior-filed application under 37 CFR 1.78(a)(3) should not be construed as meaning that the instant application is entitled to the benefit of the prior-filed application. In order for the instant application to be entitled to the benefit of the prior-filed application, all other requirements under 35 U.S.C. § 120 and 37 CFR 1.78(a)(1) and (a)(2) must be met. Similarly, the fact that the corrected Filing Receipt accompanying this decision on petition includes the prior-filed application should not be construed as meaning that applicant is entitled to the claim for benefit of priority to the prior-filed application noted thereon. Accordingly, the examiner will, in due course, consider this benefit claim and determine whether the instant application is entitled to the benefit of the earlier filing date.

A corrected Filing Receipt, which includes the priority claim to the prior-filed nonprovisional application, accompanies this decision on petition.

Further, the address given on the petition differs from the address of record. A courtesy copy of this decision is being mailed to the address given on the petition; however, the Office will mail all future correspondence solely to the address of record.

Any inquiries concerning this decision may be directed to Joan Olszewski at (571) 272-7751.

This matter is being referred to Technology Center Art Unit 2166 for appropriate action on the Amendment and ADS filed July 26, 2011, including consideration by the examiner of applicant's entitlement to claim benefit of priority under 35 U.S.C. § 120 to the prior-filed nonprovisional application.

/Liana Walsh/
Liana Walsh
Petitions Examiner
Office of Petitions

cc: George S. Bardmesser
1025 Connecticut Avenue, N.W., Suite 1000
Washington, D.C. 20006

ATTACHMENT: Corrected Filing Receipt

UNITED STATES PATENT AND TRADEMARK OFFICE

UNITED STATES DEPARTMENT OF COMMERCE
United States Patent and Trademark Office
Address: COMMISSIONER FOR PATENTS
P.O. Box 1450
Alexandria, Virginia 22313-1450
www.uspto.gov

APPLICATION NUMBER	FILING or 371(c) DATE	GRP ART UNIT	FIL FEE REC'D	ATTY.DOCKET.NO	TOT CLAIMS	IND CLAIMS
11/972,556	01/10/2008	2166	1030	2230.0330004	17	3

CONFIRMATION NO. 6888

CORRECTED FILING RECEIPT

54089
BARDMESSER LAW GROUP
10300 Thornbush Lane
Bethesda, MD 20184

OC000000049505811

Date Mailed: 08/25/2011

Receipt is acknowledged of this non-provisional patent application. The application will be taken up for examination in due course. Applicant will be notified as to the results of the examination. Any correspondence concerning the application must include the following identification information: the U.S. APPLICATION NUMBER, FILING DATE, NAME OF APPLICANT, and TITLE OF INVENTION. Fees transmitted by check or draft are subject to collection. Please verify the accuracy of the data presented on this receipt. **If an error is noted on this Filing Receipt, please submit a written request for a Filing Receipt Correction. Please provide a copy of this Filing Receipt with the changes noted thereon. If you received a "Notice to File Missing Parts" for this application, please submit any corrections to this Filing Receipt with your reply to the Notice. When the USPTO processes the reply to the Notice, the USPTO will generate another Filing Receipt incorporating the requested corrections**

Applicant(s)

ALEXANDER G. TORMASOV, Moscow, RUSSIAN FEDERATION;

Assignment For Published Patent Application

SWsoft Holdings, Ltd., Herndon, VA

Power of Attorney: The patent practitioners associated with Customer Number 54089

Domestic Priority data as claimed by applicant

This application is a CIP of 11/378,268 03/20/2006 PAT 7,584,228

Foreign Applications (You may be eligible to benefit from the **Patent Prosecution Highway** program at the USPTO. Please see http://www.uspto.gov for more information.)

If Required, Foreign Filing License Granted: 01/31/2008

The country code and number of your priority application, to be used for filing abroad under the Paris Convention, is **US 11/972,556**

Projected Publication Date: Not Applicable

Non-Publication Request: No

Early Publication Request: No

Title

MANAGING COMPUTER FILE SYSTEM USING FILE SYSTEM TREES

Preliminary Class

707

PROTECTING YOUR INVENTION OUTSIDE THE UNITED STATES

Since the rights granted by a U.S. patent extend only throughout the territory of the United States and have no effect in a foreign country, an inventor who wishes patent protection in another country must apply for a patent in a specific country or in regional patent offices. Applicants may wish to consider the filing of an international application under the Patent Cooperation Treaty (PCT). An international (PCT) application generally has the same effect as a regular national patent application in each PCT-member country. The PCT process **simplifies** the filing of patent applications on the same invention in member countries, but **does not result** in a grant of "an international patent" and does not eliminate the need of applicants to file additional documents and fees in countries where patent protection is desired.

Almost every country has its own patent law, and a person desiring a patent in a particular country must make an application for patent in that country in accordance with its particular laws. Since the laws of many countries differ in various respects from the patent law of the United States, applicants are advised to seek guidance from specific foreign countries to ensure that patent rights are not lost prematurely.

Applicants also are advised that in the case of inventions made in the United States, the Director of the USPTO must issue a license before applicants can apply for a patent in a foreign country. The filing of a U.S. patent application serves as a request for a foreign filing license. The application's filing receipt contains further information and guidance as to the status of applicant's license for foreign filing.

Applicants may wish to consult the USPTO booklet, "General Information Concerning Patents" (specifically, the section entitled "Treaties and Foreign Patents") for more information on timeframes and deadlines for filing foreign patent applications. The guide is available either by contacting the USPTO Contact Center at 800-786-9199, or it can be viewed on the USPTO website at http://www.uspto.gov/web/offices/pac/doc/general/index.html.

For information on preventing theft of your intellectual property (patents, trademarks and copyrights), you may wish to consult the U.S. Government website, http://www.stopfakes.gov. Part of a Department of Commerce initiative, this website includes self-help "toolkits" giving innovators guidance on how to protect intellectual property in specific countries such as China, Korea and Mexico. For questions regarding patent enforcement issues, applicants may call the U.S. Government hotline at 1-866-999-HALT (1-866-999-4158).

LICENSE FOR FOREIGN FILING UNDER

Title 35, United States Code, Section 184

Title 37, Code of Federal Regulations, 5.11 & 5.15

GRANTED

The applicant has been granted a license under 35 U.S.C. 184, if the phrase "IF REQUIRED, FOREIGN FILING LICENSE GRANTED" followed by a date appears on this form. Such licenses are issued in all applications where the conditions for issuance of a license have been met, regardless of whether or not a license may be required as

set forth in 37 CFR 5.15. The scope and limitations of this license are set forth in 37 CFR 5.15(a) unless an earlier license has been issued under 37 CFR 5.15(b). The license is subject to revocation upon written notification. The date indicated is the effective date of the license, unless an earlier license of similar scope has been granted under 37 CFR 5.13 or 5.14.

This license is to be retained by the licensee and may be used at any time on or after the effective date thereof unless it is revoked. This license is automatically transferred to any related applications(s) filed under 37 CFR 1.53(d). This license is not retroactive.

The grant of a license does not in any way lessen the responsibility of a licensee for the security of the subject matter as imposed by any Government contract or the provisions of existing laws relating to espionage and the national security or the export of technical data. Licensees should apprise themselves of current regulations especially with respect to certain countries, of other agencies, particularly the Office of Defense Trade Controls, Department of State (with respect to Arms, Munitions and Implements of War (22 CFR 121-128)); the Bureau of Industry and Security, Department of Commerce (15 CFR parts 730-774); the Office of Foreign AssetsControl, Department of Treasury (31 CFR Parts 500+) and the Department of Energy.

NOT GRANTED

No license under 35 U.S.C. 184 has been granted at this time, if the phrase "IF REQUIRED, FOREIGN FILING LICENSE GRANTED" DOES NOT appear on this form. Applicant may still petition for a license under 37 CFR 5.12, if a license is desired before the expiration of 6 months from the filing date of the application. If 6 months has lapsed from the filing date of this application and the licensee has not received any indication of a secrecy order under 35 U.S.C. 181, the licensee may foreign file the application pursuant to 37 CFR 5.15(b).

UNITED STATES PATENT AND TRADEMARK OFFICE

Commissioner for Patents
United States Patent and Trademark Office
P.O. Box 1450
Alexandria, VA 22313-1450
www.uspto.gov

MAILED

SEP 13 2010

OFFICE OF PETITIONS

FISH & RICHARDSON, PC
P.O. BOX 1022
MINNEAPOLIS MN 55440-1022

In re Application of	:	
SMITH, Richard A. et al.	:	
Application No. 11/972,599	:	DECISION ON PETITION
Filed: January 10, 2008	:	TO WITHDRAW
Attorney Docket No. **23309-0009001**	:	FROM RECORD
	:	

This is a decision on the Request to Withdraw as attorney or agent of record under 37 C.F.R. § 1.36(b), filed August 17, 2010

The request is **NOT APPROVED**.

The Office has revised its change in procedure for request to withdraw from representation applies to requests filed on or after May 12, 2008.

The Office will no longer accept address changes to a new practitioner or law firm filed with a Request, absent the filing of a power of attorney to the new representative. The Office will either change the correspondence address of record to the most current address information provided for the assignee of the entire interest who properly became of record under 37 CFR 3.71 or, if no assignee of the entire interest has properly been made of record under 37 CFR 3.71, the most current address information provided for the first named inventor.

Accordingly, the request to withdraw from record cannot be approved because the request to change the correspondence address is not that of: (1) the first named inventor; or (2) an assignee of the entire interest under 37 C.F.R 3.71 who has properly intervened.

If an assignee has intervened in this application, then a Statement under 37 CFR 3.73(b) or a copy of the actual assignment must be submitted with a renewed request listing Decision Sciences International Corporation.

All future communications from the Office will continue to be directed to the above-listed address until otherwise notified by applicant.

Telephone inquiries concerning this decision should be directed to Tredelle Jackson at 571-272-2783.

/Tredelle D. Jackson/
Paralegal Specialist
Office of Petitions

cc: **DECISION SCIENCES INTERNATIONAL CORPORATION**
12345 FIRST AMERICAN WAY
SUITE 130
POWAY, CALIFORNIA 92064

UNITED STATES PATENT AND TRADEMARK OFFICE

Commissioner for Patents
United States Patent and Trademark Office
P.O. Box 1450
Alexandria, VA 22313-1450
www.uspto.gov

MAILED

FEB 16 2011

OFFICE OF PETITIONS

QUALCOMM INCORPORATED
5775 MOREHOUSE DR.
SAN DIEGO CA 92121

In re Patent No. 7,764,537	:	
Issue Date: July 27, 2010	:	
Application No. 11/972,674	:	ON PETITION
Filed: January 11, 2008	:	
Attorney Docket No. 070821	:	

This is a decision on the petition filed October 6, 2010, under 37 CFR 3.81(b) to correct the name of the assignee on the front page of the above-identified patent by way of a certificate of correction.

The request is **DISMISSED**.

Petitioner states that the correct assignee name was incorrectly submitted on the Fee(s) Transmittal form PTOL-85(b) at the time of payment of the issue fee. Accordingly, petitioner requests that a certificate of correction be issued to reflect the correct assignee on the front page of the Letters Patent in the patent to be issued from the application.

37 CFR 3.81(b), effective June 25, 2004, reads:

> *After payment of the issue fee:* Any request for issuance of an application in the name of the assignee submitted after the date of payment of the issue fee, and any request for a patent to be corrected to state the name of the assignee, must state that the assignment was submitted for recordation as set forth in § 3.11 before issuance of the patent, and must include a request for a certificate of correction under § 1.323 of this chapter (accompanied by the fee set forth in § 1.20(a) and the processing fee set forth in § 1.17(i) of this chapter.

A review of Office database assignment records reflects that the name of the assignee(s) are "Yonsei University" along with "Qualcomm Incorporated not "Industry-Academic Cooperation Foundation, Yonsei University". Therefore a submission of a corrected certificate of correction would be appropriate.

A petition under 37 CFR 3.81(b) requires a fee of $130. As authorized this fee will be charged to petitioner's deposit account.

Further correspondence with respect to this matter should be addressed as follows:

By Mail: Mail Stop PETITION
Commissioner for Patents
P. O. Box 1450
Alexandria, VA 22313-1450

By hand: U. S. Patent and Trademark Office
Customer Service Window, Mail Stop Petitions
Randolph Building
401 Dulany Street
Alexandria, VA 22314

The centralized facsimile number is **(571) 273-8300.**

Telephone inquiries concerning this decision should be directed to Kimberly Inabinet at (571) 272-4618.

/Carl Friedman/
Carl Friedman
Petitions Examiner
Office of Petitions

UNITED STATES PATENT AND TRADEMARK OFFICE

Commissioner for Patents
United States Patent and Trademark Office
P.O. Box 1450
Alexandria, VA 22313-1450
www.uspto.gov

MAILED

MAR 01 2011

OFFICE OF PETITIONS

PATENT DEPT – INTUITIVE
SURGICAL OPERATIONS
1266 KIFER RD BLDG 101
SUNNYVALE CA 94086

In re Application of	:	
NIXON	:	
Application No. 11/972,771	:	ON PETITION
Filed: January 11, 2008	:	
Attorney Docket No. 017516-011401US	:	

This is a decision on the petition under the unintentional provisions of 37 CFR 1.137(b), filed January 5, 2011, to revive the above-identified application.

The petition is **GRANTED**.

The application became abandoned for failure to timely file a reply within the meaning of 37 CFR 1.113 to the final Office action of March 31, 2010. The proposed reply required for consideration of a petition to revive must be a Notice of Appeal (and appeal fee required by 37 CFR 41.20(b)(2), an amendment that *prima facie* places the application in condition for allowance, a Request for Continued Examination and submission (37 CFR 1.114), or the filing of a continuing application under 37 CFR 1.53(b). See MPEP 711.03(c)(II)(A)(2). No extensions of time pursuant to the provisions of 37 CFR 1.136(a) were obtained. Accordingly, the date of abandonment of this application is July 1, 2010.

The petition satisfies the requirements of 37 CFR 1.137(b) in that petitioner has supplied (1) the reply in the form of a Request for Continued Examination (RCE) and fee of $810, and the submission required by 37 CFR 1.114; (2) the petition fee of $1620; and (3) a proper statement of unintentional delay.

Telephone inquiries concerning this decision should be directed to the undersigned at (571) 272-6735.

This application is being referred to Technology Center AU 3664 for processing of the RCE and for appropriate action by the Examiner in the normal course of business on the amendment submitted in accordance with 37 CFR 1.114.

/Diane C. Goodwyn/
Diane C. Goodwyn
Petitions Examiner
Office of Petitions

UNITED STATES PATENT AND TRADEMARK OFFICE

Commissioner for Patents
United States Patent and Trademark Office
P.O. Box 1450
Alexandria, VA 22313-1450
www.uspto.gov

MYERS BUSINESS LAW, LLC
TWO RAVINIA DRIVE
SUITE 500
ATLANTA GA 30346

MAILED
APR 05 2011
OFFICE OF PETITIONS

In re Application of	:	
George L. Frady	:	
Application No. 11/972,799	:	DECISION ON PETITION
Filed: January 11, 2008	:	
Attorney Docket No. **CTNO-0003**	:	

This is a decision on the petition under the unintentional provisions of 37 CFR 1.137(b), filed February 07, 2011, to revive the above-identified application.

The petition is **GRANTED**.

The application became abandoned for failure to timely file a reply within the meaning of 37 CFR 1.113 to the final Office action of June 24, 2010. The proposed reply required for consideration of a petition to revive must be a Notice of Appeal (and appeal fee required by 37 CFR 41.20(b)(2), an amendment that *prima facie* places the application in condition for allowance, a Request for Continued Examination and submission (37 CFR 1.114), or the filing of a continuing application under 37 CFR 1.53(b). See MPEP 711.03(c)(III)(A)(2). A three (3) months extension of time pursuant to the provisions of 37 CFR 1.136(a) was obtained. Accordingly, the date of abandonment of this application is December 26, 2010.

The petition satisfies the requirements of 37 CFR 1.137(b) in that petitioner has supplied (1) the reply in the form of a Request for Continued Examination (RCE) and fee of $405, and the submission required by 37 CFR 1.114; (2) the petition fee of $810; and (3) a proper statement of unintentional delay. Accordingly, the reply to the final Office Action of June 24, 2010 is accepted as having been unintentionally delayed.

The application file does not indicate a change of address has been filed in this case, although the address given on the petition differs from the address of record. A change of address should be filed in this case in accordance with MPEP 601.03. A courtesy copy of this decision is being

mailed to the address noted on the petition. However, until otherwise instructed, all future correspondence regarding this application will be mailed solely to the address of record.

Telephone inquiries concerning this decision should be directed to the undersigned at (571) 272-2783.

This application is being referred to Technology Center AU 3636 for processing of the RCE and for appropriate action by the Examiner in the normal course of business on the amendment submitted in accordance with 37 CFR 1.114.

Ramesh Krishnamurthy
Petitions Examiner
Office of Petitions

cc: **AARON F. BOURGEOIS**
WOODCOCK WASHBURN LLP, CIRA CENTRE
12TH FLOOR
2929 ARCH STREET
PHILADELPHIA PA 19104-2891

UNITED STATES PATENT AND TRADEMARK OFFICE

Commissioner for Patents
United States Patent and Trademark Office
P.O. Box 1450
Alexandria, VA 22313-1450
www.uspto.gov

HAYES, SOLOWAY P.C.
175 CANAL STREET
MANCHESTER NH 03101

In re Application of		JAN 25 2012
KUNKEL, SANFORD S. et al.	:	
Application No.: 11/972,914	:	DECISION ON
Filing or 371(c) Date: January 11, 2008	:	PETITION
Attorney Docket Number: DAHLIN.1007	:	

This is a decision on the Petition to Withdraw Holding of Abandonment received in the United States Patent and Trademark Office (USPTO) on January 18 & 20, 2012.

This petition is **GRANTED**.

The application was held abandoned for failure to timely submit the Issue Fee and Publication fee as required by the Notice of Allowance mailed September 19, 2011 which set forth a three (3) month statutory period of reply. The Notice of Abandonment was mailed on January 11, 2012.

Petitioner states that the issue fee transmittal and payment were timely filed via the USPTO on December 19, 2011 with application 11/972,885. Petitioner submitted a copy of the original submission which included a properly completed Certificate of Mailing/Transmission.

In view of the foregoing, the holding of abandonment for failure to timely pay the issue fee is hereby withdrawn and the application restored to pending status.

Telephone inquiries concerning this matter should be directed to the undersigned at (703) 756-1547.

Kay D. Pinkney
Application Assistance Unit
Office of Data Management

Doc Code: PET.PTA.RCAL
Document Description: Request for Recalculation in view of Wyeth

PTO/SB/131 (02-10)
Approved for use through 07/31/2010. OMB 0651-0020
U.S. Patent and Trademark Office; U. S. DEPARTMENT OF COMMERCE
Under the Paperwork Reduction Act of 1995, no persons are required to respond to a collection of information unless it displays a valid OMB control number.

REQUEST FOR RECALCULATION OF PATENT TERM ADJUSTMENT IN VIEW OF *WYETH**

Attorney Docket Number: 54011-7004	
Application Number: 11/973,009	Filing Date (or 371(b) or (f) Date): October 4, 2007
Patent Number: 7,663,749	Issue Date: February 16, 2010
First Named Inventor: Marc Levesque	
Title: Method and System to Measure the Concentration of Constituent Elements in an Inhomogeneous Material Using LIBS	

PATENTEE HEREBY REQUESTS RECALCULATION OF THE PATENT TERM ADJUSTMENT (PTA) UNDER 35 USC 154(b) INDICATED ON THE ABOVE-IDENTIFIED PATENT. THE PATENTEE'S SOLE BASIS FOR REQUESTING THE RECALCULATION IS THE USPTO'S PRE-*WYETH* INTERPRETATION OF 35 U.S.C. 154(b)(2)(A).

Note: This form is only for requesting a recalculation of PTA for patents issued before March 2, 2010, if the sole basis for requesting the recalculation is the USPTO's pre-*Wyeth* interpretation of 35 U.S.C. 154(b)(2)(A). See Instruction Sheet on page 2 for more information.

Patentees are reminded that to preserve the right to review in the United States District Court for the District of Columbia of the USPTO's patent term adjustment determination, a patentee must ensure that he or she also takes the steps required under 35 U.S.C. 154(b)(3) and (b)(4) and 37 CFR 1.705 in a timely manner.

**Wyeth v. Kappos*, No. 2009-1120 (Fed. Cir., Jan. 7, 2010).

Signature /Richard C. Himelhoch/	Date 8/13/2010
Name (Print/Typed) Richard C. Himelhoch	Registration Number 35,544

***Note**: Signatures of all the inventors or assignees of record of the entire interest or their representative(s) are required in accordance with 37 CFR 1.33 and 11.18. Please see 37 CFR 1.4(d) for the form of the signature. If necessary, submit multiple forms for more than one signature, see below**.*

☐ *Total of _____ forms are submitted.

The information is required to obtain or retain a benefit by the public which is to file (and by the USPTO to process) an application. Confidentiality is governed by 35 U.S.C. 122 and 37 CFR 1.11 and 1.14. This collection is estimated to take 10 minutes to complete, including gathering, preparing, and submitting the completed application form to the USPTO. Time will vary depending upon the individual case. Any comments on the amount of time you require to complete this form and/or suggestions for reducing this burden, should be sent to the Chief Information Officer, U.S. Patent and Trademark Office, U.S. Department of Commerce, P.O. Box 1450, Alexandria, VA 22313-1450. DO NOT SEND FEES OR COMPLETED FORMS TO THIS ADDRESS. **SEND TO: Commissioner for Patents, P.O. Box 1450, Alexandria, VA 22313-1450.**

If you need assistance in completing the form, call 1-800-PTO-9199 and select option 2.

UNITED STATES PATENT AND TRADEMARK OFFICE

UNITED STATES DEPARTMENT OF COMMERCE
United States Patent and Trademark Office
Address: COMMISSIONER FOR PATENTS
P.O. Box 1450
Alexandria, Virginia 22313-1450
www.uspto.gov

UNGARETTI & HARRIS LLP
INTELLECTUAL PROPERTY GROUP - PATENTS
70 WEST MADISON STREET
SUITE 3500
CHICAGO, IL 60602-4224

Mail Date: 08/18/2010

Applicant	: Marc Levesque	: DECISION ON REQUEST FOR
Patent Number	: 7663749	: RECALCULATION of PATENT
Issue Date	: 02/16/2010	: TERM ADJUSTMENT IN VIEW
Application No	: 11/973,009	: OF WYETH AND NOTICE OF INTENT TO
Filed	: 10/04/2007	: ISSUE CERTIFICATE OF CORRECTION
		:

The Request for Recalculation is **GRANTED** to the extent indicated.

The patent term adjustment has been determined to be **301** days. The USPTO will *sua sponte* issue a certificate of correction reflecting the amount of PTA days determined by the recalculation.

Prior to the issuance of the certificate of correction, the USPTO will afford patentee an opportunity to be heard and request reconsideration. Accordingly, patentee has **one month or thirty (30) days**, whichever is longer, to file a request for reconsideration of this patent term adjustment calculation. See 35 U.S.C. 154(b)(3)(B)(ii) and 37 CFR 1.322(a)(4). No extensions of time will be granted under 37 CFR 1.136.

Patentee should use document code PET.OP if electronically filing a request for reconsideration of this patent term adjustment calculation. The patentee must also include the information required by 37 CFR 1.705(b)(2) and the fee required by 37 CFR 1.18(e). If patentee does not file a timely request for reconsideration of this patent term adjustment calculation including the information required by 37 CFR 1.705(b)(2) and the fee required by 37 CFR 1.18(e), the USPTO will issue a certificate of correction reflecting the PTA determination noted above.

Patentee should be aware that in order to preserve the right to review in the United States District Court for the District of Columbia of the USPTO patent term adjustment determination, patentee must ensure that he or she also take the steps required under 35 U.S.C. 154(b)(4)(A) in a timely manner. Nothing in the request for recalculation should be construed as providing an alternative time frame for commencing a civil action under 35 U.S.C. 154(b)(4)(A).

Any questions concerning this decision should be directed to the Office of Patent Legal Administration at 571-272-7702.

UNITED STATES PATENT AND TRADEMARK OFFICE

Commissioner for Patents
United States Patent and Trademark Office
P.O. Box 1450
Alexandria, VA 22313-1450
www.uspto.gov

MAILED

DEC 02 2010

PCT LEGAL ADMINISTRATION

Nancy Chiu Wilker, Ph.D.
Chief Intellectual Property Counsel
Cell Signaling Technology, Inc.
3 Trask Lane
Danvers, MA 01923

In re Application of :
GROSS et al. :
Application No.: 11/973,019 :
Filed: October 05, 2007 : DECISION ON PETITION
Attorney Docket No.: CST-221 :
For: REAGENTS FOR THE DETECTION OF :
PROTEIN PHOSPHORYLATION IN :
LEUKEMIA SIGNALING PATHWAYS

This decision is issued in response to applicant's "Petition under 37 CFR 1.78(a)(3)" dated January 21, 2009, requesting acceptance of an unintentionally delayed claim for priority under 35 U.S.C. 365(c) to international application PCT/US2006/000979. Because the accompanying amendment also adds a benefit claim to a prior filed provisional application, the petition is being treated as a petition under 37 CFR 1.78(a)(6) to accept an unintentionally delayed claim under 35 U.S.C. §119(e) for the benefit of the prior-filed provisional application.

The petitions are GRANTED.

The present nonprovisional application was filed after November 29, 2000, and the claim herein for the benefit of priority to the prior-filed nonprovisional applications is submitted after expiration of the period specified in 37 CFR 1.78(a)(2)(ii) and 1.78(a)(5)(ii). Therefore, this is a proper petition under 37 CFR 1.78(a)(3) and 1.78(a)(6).

A petition for acceptance of a claim for late priority under 37 CFR §§ 1.78(a)(3) and 1.78(a)(6) is only applicable to those applications filed on or after November 29, 2000. Further, the petition is appropriate only after the expiration of the period specified in 37 CFR §§ 1.78(a)(2)(ii) and 1.78(a)(5)(ii). In addition, the petition under 37 CFR §§ 1.78(a)(3) and 1.78(a)(6) must be accompanied by:

(1) the reference required by 35 U.S.C. §§ 120 and 119(e) and 37 CFR §§ 1.78(a)(2)(i) and 1.78(a)(5)(i) of the prior-filed application, unless previously submitted;
(2) the surcharge set forth in § 1.17(t); and

(3) a statement that the entire delay between the date the claim was due under 37 CFR §§ 1.78(a)(2)(ii) and 1.78(a)(5)(ii) and the date the claim was filed was unintentional. The Director may require additional where there is a question whether the delay was unintentional.

The petition complies with the requirements for a grantable petition under 37 CFR §§1.78(a)(3) and 1.78(a)(6) in that (1) a proper reference to the prior-filed applications has been included in an amendment to the first sentence of the specification, as provided by 37 CFR §§ 1.78(a)(2)(iii) and 1.78(a)(5)(iii); 2) the surcharge fee required by 37 CFR 1.17(t) has been submitted; and (3) applicant's statement that "the entire delay between the date the claim was due under 37 CFR 1.78(a)(3)(iii) and the date the claim was filed by the filing of the instant petition was unintentional" is construed as meaning that "the entire delay between the date the claim was due under 37 CFR 1.78(a)(3) and 1.78(a)(6) and the date the claim was filed was unintentional." If this is incorrect, petitioner must immediately notify the Office of PCT Legal Administration. As construed, petitioner's statement satisfied item (3) above. Accordingly, having found that the petition for acceptance of an unintentionally delayed claim for the benefit of priority under 35 U.S.C. §§ 120 and 119(e) to the prior-filed applications satisfies the conditions of 37 CFR §§ 1.78(a)(3) and 1.78(a)(6), the petition is granted..

The granting of the petition to accept the delayed benefit claim to the prior-filed applications under 37 CFR §§ 1.78(a)(3) and 1.78(a)(6) should not be construed as meaning that this application is entitled to the benefit of the filing date of the prior-filed applications. In order for this application to be entitled to the benefit of the prior-filed applications, all other requirements under 35 U.S.C. §§120 and 365(c) and 1.78(a)(1) and (a)(2) and under 35 U.S.C. §119(e) and 37 CFR 1.78(a)(4) and (a)(5) must be met. Similarly, the fact that the corrected Filing Receipt accompanying this decision on petition includes the prior-filed applications should not be construed as meaning that applicant is entitled to the claim for benefit of priority to the prior-filed applications noted thereon. Accordingly, the examiner will, in due course, consider this benefit claim and determine whether this application is entitled to the benefit of the earlier filing date.

A corrected Filing Receipt, which includes the priority claim to the prior-filed applications, accompanies this decision on petition. Any questions concerning this matter may be directed to Anthony Smith at (571) 272-3296. All other inquiries concerning either the examination procedures or status of the application should be directed to the Technology Center.

This matter is being referred to Technology Center Art Unit 1642 for appropriate action on the amendment submitted August 27, 2010, including consideration by the examiner of the claim for benefit of the prior-filed applications.

BM

Boris Milef
PCT Legal Examiner
Office of PCT Legal Administration

UNITED STATES PATENT AND TRADEMARK OFFICE

Commissioner for Patents
United States Patent and Trademark Office
P.O. Box 1450
Alexandria, VA 22313-1450
www.uspto.gov

TOPE-MCKAY & ASSOCIATES
30765 PACIFIC COAST HIGHWAY #420
MALIBU CA 90265

MAILED
FEB 27 2012
OFFICE OF PETITIONS

In re Application of
KHOSLA et al.
Application No. 11/973,161
Filed: 10/04/2007
Attorney Docket No. HRL199

NOTICE

This is a Notice regarding your request for acceptance of a fee deficiency submission under 37 CFR 1.28 filed February 3, 2012.

The Office no longer investigates or rejects original or reissue applications under 37 CFR 1.56. **1098 Off. Gaz. Pat. Office 502 (January 3, 1989)**. Therefore, nothing in this Notice is intended to imply that an investigation was done.

Your fee deficiency submission under 37 CFR 1.28 is hereby **ACCEPTED**.

This application is no longer entitled to small entity status. Accordingly, all future fees paid in this application must be paid at the large entity rate.

This application is being forwarded to the Office of Data Management.

Inquiries related to this communication should be directed to the undersigned at (571) 272-3211.

/Christina Tartera Donnell/

Christina Tartera Donnell
Senior Petitions Attorney
Office of Petitions

UNITED STATES PATENT AND TRADEMARK OFFICE

Commissioner for Patents
United States Patent and Trademark Office
P.O. Box 1450
Alexandria, VA 22313-1450
www.uspto.gov

AMGEN INC.
MAIL STOP 28-2-C
ONE AMGEN CENTER DRIVE
THOUSAND OAKS CA 91320-1799

MAILED
APR 25 2011
OFFICE OF PETITIONS

In re Application of	:	
Arnold McAuley	:	
Application No. 11/973,200	:	DECISION ON PETITION
Filed: October 5, 2007	:	
Attorney Docket No. **A-1196-US-NP**	:	

This is a decision on the petition under the unintentional provisions of 37 CFR 1.137(b), filed March 17, 2011, to revive the above-identified application.

There is no indication that the petition is signed by a registered patent attorney or patent agent of record. However, in accordance with 37 CFR 1.34, the signature of Mr. Scott N. Bernstein appearing on the correspondence shall constitute a representation to the United States Patent and Trademark Office that he is authorized to represent the particular party in whose behalf he acts. If, Mr. Scott N. Bernstein desires to be acknowledged as the attorney of record in this application, the appropriate power of attorney documents must be submitted.

The application became abandoned for failure to reply in a timely manner to the Restriction Requirement, mailed March 4, 2010, which set a shortened statutory period for reply of one (1) month or thirty (30) days (whichever is later). No extensions of time under the provisions of 37 CFR 1.136(a) were obtained. Accordingly, the application became abandoned on April 5, 2010.

The petition is **GRANTED**.

The petition satisfies the requirements of 37 CFR 1.137(b) in that petitioner has supplied (1) the reply in the form of an Election, (2) the petition fee of $1,620, and (3) a proper statement of unintentional delay.

Telephone inquiries concerning this decision should be directed to JoAnne Burke at (571)272-4584.

This application is being referred to Technology Center AU 3732 for appropriate action by the Examiner in the normal course of business on the reply received.

/JoAnne Burke/
JoAnne Burke
Petitions Examiner
Office of Petitions

SPE RESPONSE FOR CERTIFICATE OF CORRECTION

Paper No.: _____

DATE : 08/05/10

TO SPE OF : ART UNIT 2453

SUBJECT : Request for Certificate of Correction for Appl. No 11/973326.: 7739349

Please respond to this request for a certificate of correction within 7 days.

FOR IFW FILES:

Please review the requested changes/corrections as shown in the **COCIN** document(s) in the IFW application image. No new matter should be introduced, nor should the scope or meaning of the claims be changed.

Please complete the response (see below) and forward the completed response to scanning using document code **COCX**.

FOR PAPER FILES:

Please review the requested changes/corrections as shown in the attached certificate of correction. Please complete this form (see below) and forward it with the file to:

Certificates of Correction Branch (CofC)

Should the change(s) Be made?

RoChaun Johnson
Certificates of Correction Branch
571 272-0470

Thank You For Your Assistance

The request for issuing the above-identified correction(s) is hereby:

Note your decision on the appropriate box.

- ☑ **Approved** — **All** changes apply.
- ☐ **Approved in Part** — Specify below which changes **do not** apply.
- ☐ **Denied** — State the reasons for denial below.

Comments: Changes drawn to Foreign Application Priority Data, and do not affect the scope of the invention, as claimed.

JOSEPH THOMAS
SUPERVISORY PATENT EXAMINER
TECHNOLOGY CENTER ~~3600~~ 2400

SPE

2453
Art Unit

UNITED STATES PATENT AND TRADEMARK OFFICE

COMMISSIONER FOR PATENTS
UNITED STATES PATENT AND TRADEMARK OFFICE
P.O. BOX 1450
ALEXANDRIA, VA 22313-1450
www.uspto.gov

MAILED

FEB 28 2011

OFFICE OF PETITIONS

WORKMAN NYDEGGER c/o Invention Science Fund
1000 EAGLE GATE TOWER
60 EAST SOUTH TEMPLE
SALT LAKE CITY UT 84111

In re Patent No. 7,777,357	:	
Issue Date: August 17, 2010	:	
Application No. 11/973,343	:	DECISION ON PETITION
Filed: October 5, 2007	:	
Attorney Docket No. 17906.7	:	

This is a decision on the Request For Correction Of Assignee And Request For A Certificate Of Correction Under 37 C.F.R. §1.323, filed October 25, 2010, requesting correction on the Title Page of the subject patent to identify the correct assignee's name. The Request is being treated as a Petition Under 37 CFR §3.81(b). A completed Certificate of Correction Form (PTO/SB/44) was submitted with Petition.

The petition under 37 CFR §3.81(b) is **GRANTED**.

Petitioner requests that the present Petition was submitted to correct the assignee's name on the previously submitted PTOL-85B. Accordingly, petitioner requests that a Certificate of Correction (PTO/SB/44) be issued to correct assignee's name to the Title Page of the Letters Patent.

37 CFR 3.81(b), effective June 25, 2004, reads:

> *After payment of the issue fee:* Any request for issuance of an application in the name of the assignee submitted after the date of payment of the issue fee, and any request for a patent to be corrected to state the name of the assignee, must state that the assignment was submitted for recordation as set forth in § 3.11 before issuance of the patent, and must include a request for a certificate of correction under § 1.323 of this chapter (accompanied by the fee set forth in § 1.20(a) and the processing fee set forth in § 1.17(i) of this chapter.

The requisite $100.00 fee (Fee Code 1811), as set forth under 37 CFR 1.20(a), and the requisite $130.00 processing fee (Fee Code 1464), as set forth under 37 CFR 1.17(i), have been submitted. Accordingly, since the Petition complies with the provisions of 37 CFR 3.81(b), it is appropriate for the Office to issue a Certificate of Correction in accordance with the content of the Form (PTO/SB/44) submitted with Petition.

Inquiries related this communication should be directed to the undersigned at (571)272-3213.

Any questions concerning the issuance of a Certificate of Correction should be directed to the Certificates of Correction Branch at (571) 272-4200.

This matter is being referred to the Certificates of Correction Branch for processing of a Certificate of Correction in U.S. Patent No. 7,777,357.

Cheryl Gibson-Baylor

Cheryl Gibson-Baylor
Petitions Examiner
Office of Petitions

UNITED STATES PATENT AND TRADEMARK OFFICE

Commissioner for Patents
United States Patent and Trademark Office
P.O. Box 1450
Alexandria, VA 22313-1450
www.uspto.gov

KLAUS J. BACH
4407 TWIN OAKS DRIVE
MURRYSVILLE, PA 15668

MAILED

DEC 16 2010

OFFICE OF PETITIONS

In re Application of
Detlev Schniter
Application No. 11/973,358
Filed: October 4, 2007
Attorney Docket No. MB 655

DECISION ON PETITION

This is a decision on the petition under 37 CFR 1.181 (no fee), filed November 26, 2010, requesting withdrawal of the holding of abandonment in the above-identified application.

This application was held abandoned for failure to timely respond to the non-final Office action mailed March 9, 2010. A Notice of Abandonment was mailed on October 13, 2010.

Petitioner asserts that the Office action of March 9, 2010 was not received.

A review of the written record indicates no irregularity in the mailing of the Office action and, in the absence of any irregularity, there is a strong presumption that the Office action was properly mailed to the practitioner at the address of record. This presumption may be overcome by a showing that the Office action was not in fact received. In this regard, the showing required to establish the failure to receive the Office action must consist of the following:

1. a statement from practitioner stating that the Office action was not received by the practitioner;
2. a statement from the practitioner attesting to the fact that a search of the file jacket and docket records indicates that the Office action was not received; and
3. a copy of the docket record where the nonreceived Office action would have been entered had it been received and docketed must be attached to and referenced in the practitioner's statement.

The petition satisfies the above-stated requirements. Accordingly, the petition is **GRANTED** and the holding of abandonment is **withdrawn**.

It is noted that petitioner was able to obtain a copy of the non-final Office action mailed on March 9, 2010, "by private pair access to the Patent Office computer system after the Notice of Abandonment dated 10/13/10 had been received." Therefore, this application is being referred to Technology Center Art Unit 3655 for further processing in accordance with this decision.

Telephone inquiries regarding this decision should be directed to the undersigned at (571) 272-3226.

Andrea Smith
Petitions Examiner
Office of Petitions

UNITED STATES PATENT AND TRADEMARK OFFICE

Commissioner for Patents
United States Patent and Trademark Office
P.O. Box 1450
Alexandria, VA 22313-1450
www.uspto.gov

LADAS & PARRY LLP
26 WEST 61ST STREET
NEW YORK, NY 10023

MAILED

JAN 26 2011

OFFICE OF PETITIONS

ON PETITION

In re Patent No. 7,852,779 :
Issue Date: September 1, 2009 :
Application No. 11/973,450 :
Filed: October 9, 2007 :
Attorney Docket No. U 017050-4 :

This is a decision on the petition filed December 30, 2009, which is being treated as a request under 37 CFR 3.81(b)[1] to correct the name of the assignee on the front page of the above-identified patent by way of a Certificate of Correction.

The request is **GRANTED**.

Telephone inquiries concerning this decision may be directed to the April M. Wise at (571) 272-1642. Inquiries regarding the issuance of a certificate of correction should be directed to the Certificate of Correction Branch at (571) 272-4200.

The Certificates of Correction Branch will be notified of this decision granting the petition under 37 CFR 3.81(b) and directing issuance of the requested Certificate of Correction.

/Carl Friedman/
Carl Friedman
Petitions Examiner
Office of Petitions

[1] *See* MPEP 1309, subsection II; and Official Gazette of June 22, 2004.

UNITED STATES PATENT AND TRADEMARK OFFICE

Commissioner for Patents
United States Patent and Trademark Office
P.O. Box 1450
Alexandria, VA 22313-1450
www.uspto.gov

EMCH, SCHAFFER, SCHAUB &
PORCELLO CO
PO BOX 916
ONE SEAGATE
SUITE 1980
TOLEDO OH 43697

MAILED
FEB 29 2012
OFFICE OF PETITIONS

In re Application of Waltz, et al. Application No. 11/973,459 Filed: October 9, 2007 Attorney Docket Number: 07071	: : : : :	DECISION ON PETITION

This is in response to the petition under 37 CFR 1.84(a)(2), filed September 15, 2009, for acceptance of color drawings.

The petition is **DISMISSED**.

Any request for reconsideration of this decision must be submitted within **TWO (2) MONTHS** from the mail date of this decision. Extensions of time under 37 CFR 1.136(a) are permitted. The reconsideration request should include a cover letter entitled, "Renewed Petition under 37 CFR 1.84(a)(2)". No further petition fee is required for a renewed petition.

A grantable petition under 37 C.F.R. 1.84(a)(2) must be accompanied by the following:

(1) The fee set forth in 37 C.F.R. 1.17(h);

(2) Three (3) sets of color drawings, or one (1) set if filed via EFS, and

(3) The specification contains appropriate language referring to the color drawings as the first paragraph in that portion of the specification relating to the brief description of the drawings.

In addition, MPEP 608.02 states that a petition to accept color drawings will only be granted when the Office "has determined that a color drawing or photograph is the only practical medium by which to disclose in a printed utility patent the subject matter to be patented."

Here, the Office has determined that color drawings are not the only practical medium by which to disclose the subject matter. See, e.g. MPEP 608.02, Section IX, which states that drawing symbols can be used to indicate various materials where the material is an important feature of the invention.

Further correspondence with respect to this matter should be addressed as follows:

By mail: Mail Stop Petitions
Commissioner for Patents
PO Box 1450
Alexandria VA 22313-1450

By FAX: 571-273-8300
Attn: Office of Petitions

The application is being forwarded to Group Art Unit 2885.

Telephone inquiries regarding this decision should be directed to the undersigned at (571)272-3207.

Cliff Congo
Petitions Attorney
Office of Petitions

UNITED STATES PATENT AND TRADEMARK OFFICE

Commissioner for Patents
United States Patent and Trademark Office
P.O. Box 1450
Alexandria, VA 22313-1450
www.uspto.gov

E I DU PONT DE NEMOURS AND COMPANY
LEGAL PATENT RECORDS CENTER
BARLEY MILL PLAZA 25/1122B
4417 LANCASTER PIKE
WILMINGTON, DE 19805

MAILED

MAR 04 2011

OFFICE OF PETITIONS

In re Application of	:	
Bhatnagar Chitrangad	:	
Application No.: 11/973,527	:	ON PETITION
Filed: October 9, 2007	:	
Attorney Docket No.: KB5065USNA	:	

This is a decision on the petition, filed March 1, 2011, under 37 CFR 1.313(c)(2) to withdraw the above-identified application from issue after payment of the issue fee.

The petition is **GRANTED**.

The above-identified application is withdrawn from issue for consideration of a submission under 37 CFR 1.114 (request for continued examination). See 37 CFR 1.313(c)(2).

Petitioner is advised that the issue fee paid on February 24, 2011, cannot be refunded. If, however, this application is again allowed, petitioner may request that it be applied towards the issue fee required by the new Notice of Allowance.[1]

Telephone inquiries relating to this decision should be directed to the undersigned at (571) 272-3204.

The application is being referred to Technology Center AU 1783 for further processing of the request for continued examination under 37 CFR 1.114 and for consideration of the concurrently filed amendment.

/SDB/

Sherry D. Brinkley
Petitions Examiner
Office of Petitions

---

[1] *The request to apply the issue fee to the new Notice may be satisfied by completing and returning the new Part B – Fee(s) Transmittal Form (along with any balance due at the time of submission). Petitioner is advised that the Issue Fee Transmittal Form* ***must*** *be completed and timely submitted to avoid abandonment of the application.*

UNITED STATES PATENT AND TRADEMARK OFFICE

Commissioner for Patents
United States Patent and Trademark Office
P.O. Box 1450
Alexandria, VA 22313-1450
www.uspto.gov

Law Office of Peter V.D. Wilde
301 East Landing
Williamsburg VA 23185

MAILED
APR 05 2011
OFFICE OF PETITIONS

In re Application of	:	
DIGIOVANNI et al.	:	
Application No. 11/973,568	:	DECISION ON PETITION
Filed: October 9, 2007	:	UNDER 37 CFR 1.78(a)(3)
Attorney Docket No. 81-15	:	

This is a decision on the petition under 37 CFR 1.78(a)(3), filed March 1, 2011, to accept an unintentionally delayed claim under 35 U.S.C. §120 for the benefit of priority to the prior-filed nonprovisional application set forth in the concurrently filed amendment.

The petition is **DISMISSED.**

A petition for acceptance of a claim for late priority under 37 CFR 1.78(a)(3) is only applicable to those applications filed on or after November 29, 2000. Further, the petition is appropriate only after the expiration of the period specified in 37 CFR 1.78(a)(2)(ii). In addition, the petition under 37 CFR 1.78(a)(3) must be accompanied by:

(1) the reference required by 35 U.S.C. § 120 and 37 CFR 1.78(a)(2)(i) of the prior-filed application, unless previously submitted;
(2) the surcharge set forth in § 1.17(t); and
(3) a statement that the entire delay between the date the claim was due under 37 CFR 1.78(a)(2)(ii) and the date the claim was filed was unintentional. The Director may require additional information where there is a question whether the delay was unintentional.

The petition does not comply with item (1).

In regards to item (1), CFR 1.78(a)(2)(i) requires that any nonprovisional application claiming the benefit of one or more prior-filed copending nonprovisional applications must contain or be amended to contain a reference to each such prior-filed application, identifying it by application number (consisting of the series code and serial number) and indicating the relationship of the

applications. The relationship between the applications is whether the subject application is a continuation, divisional, or continuation-in-part of a prior-filed nonprovisional application. An example of a proper benefit claim is: "This application is a continuation of Application No. 10/---, filed---." A benefit claim that merely states: "This application claims the benefit of Application No. 10/---, filed---," does not comply with 37 CFR 1.72(a)(2)(i) since the proper relationship, which includes the type of continuing application, is not stated. Also, the status of each nonprovisional parent application (if it is patented or abandoned) should also be indicated, following the filing date of the parent nonprovisional application. *See* MPEP Section 201.11, Reference to Prior Nonprovisional Applications. The amendment fails to comply with the provisions of 37 CFR 1.78(a)(2)(i) and is therefore unacceptable.

Additionally, the amendment is not acceptable as drafted since it improperly incorporates by reference the prior-filed applications. An incorporation by reference statement added after an application's filing date is not effective because no new matter can be added to an application after its filing date (*see* 35 U.S.C. § 132(a)). If an incorporation by reference statement is included in an amendment to the specification to add a benefit claim under 35 U.S.C. § 120 after the filing date of the application, the amendment would not be proper. When a benefit claim under 35 U.S.C. § 120 is submitted after the filing of an application, the reference to the prior application cannot include an incorporation by reference statement of the prior application. *See* Dart Industries v. Banner, 636 F.2d 684, 207 USPQ 273 (C.A.D.C. 1980). *Note* MPEP §§ 201.06(c) and 608.04(b).

In regards to item (3), the rule at 37 CFR § 1.78(a)(3) requires a statement that the entire delay between the date the claim was due under 37 CFR § 1.78(a)(2)(ii) and the date the claim was filed was unintentional. Since the statement appearing in the petition varies from the required language, the statement is being construed as the statement required by 37 CFR §1.78(a)(3). If this is not a correct reading of the statement appearing in the petition, petitioner should promptly notify the Office.

Also, it is not apparent whether the person signing the statement of unintentional delay was in a position to have firsthand or direct knowledge of the facts and circumstances of the delay at issue. Nevertheless, such statement is being treated as having been made as the result of a reasonable inquiry into the facts and circumstances of such delay. See 37 CFR 10.18(b) and Changes to Patent Practice and Procedure; Final Rule Notice, 62 Fed. Reg. 53131, 53178 (October 10, 1997), 1203 Off. Gaz. Pat. Office 63, 103 (October 21, 1997). In the event that such an inquiry has not been made, petitioner must make such an inquiry. If such inquiry results in the discovery that it is not correct that the entire delay in filing the required reply from the due date for the reply until the filing of a grantable petition pursuant to 37 CFR 1.137(b) was unintentional, petitioner must notify the Office.

Before the petition under 37 CFR § 1.78(a)(3) can be granted, a renewed petition under 37 CFR § 1.78(a)(3) an Application Data Sheet or a substitute amendment (complying with 37 CFR

1.121 and 37 CFR 1.76(b)(5)), which states the relationship of the prior-filed application to this application, are required.

Further correspondence with respect to this matter should be addressed as follows:

By mail: Mail Stop PETITIONS
Commissioner for Patents
Post Office Box 1450
Alexandria, VA 22313-1450

By hand: Customer Service Window
Mail Stop Petitions
Randolph Building
401 Dulany Street
Alexandria, VA 22314

By fax: (571) 273-8300
ATTN: Office of Petitions

Any questions concerning this matter may be directed to Jose' G Dees at (571) 272-1569.

Christopher Bottorff
Petitions Examiner
Office of Petitions

UNITED STATES PATENT AND TRADEMARK OFFICE

Commissioner for Patents
United States Patent and Trademark Office
P.O. Box 1450
Alexandria, VA 22313-1450
www.uspto.gov

Garlick Harrison & Markison (CS)
P.O. Box 160727
Austin, TX 78716

MAILED

DEC 17 2010

OFFICE OF PETITIONS

In re Application of
S. Christopher Gladwin, et. al.
Application No. 11/973,622
Filed: October 9, 2007
Attorney Docket No. CS002

DECISION ON PETITION
UNDER 37 CFR 1.78(a)(3)

This is a decision on the renewed petition under 37 CFR §§1.78(a)(3) and (a)(6) and a request for a corrected filing receipt, filed November 15, 2010, which is being treated as a petition under 37 CFR 1.78(a)(3), to accept an unintentionally delayed claim under 35 U.S.C. § 120 for the benefit of priority to the prior-filed nonprovisional application set forth in the concurrently filed amendment.

The petition is **GRANTED**.

A petition for acceptance of a claim for late priority under 37 CFR 1.78(a)(3) is only applicable to those applications filed on or after November 29, 2000. Further, the petition is appropriate only after the expiration of the period specified in 37 CFR 1.78(a)(2)(ii). In addition, the petition under 37 CFR 1.78(a)(3) must be accompanied by:

(1) the reference required by 35 U.S.C. § 120 and 37 CFR 1.78(a)(2)(i) of the prior-filed application, unless previously submitted;
(2) the surcharge set forth in § 1.17(t); and
(3) a statement that the entire delay between the date the claim was due under 37 CFR 1.78(a)(2)(ii) and the date the claim was filed was unintentional. The Director may require additional information where there is a question whether the delay was unintentional.

All of the above requirements having been satisfied, the late claim for priority under 35 U.S.C. § 120 is accepted as being unintentionally delayed.

The granting of the petition to accept the delayed benefit claim to the prior-filed application under 37 CFR 1.78(a)(3) should not be construed as meaning that this application is entitled to the benefit of the prior-filed application. In order for this application to be entitled to the benefit of the prior-filed application, all other requirements under 35 U.S.C. § 120 and 37 CFR 1.78(a)(1) and (a)(2) must be met. Similarly, the fact that the corrected Filing Receipt accompanying this decision on petition includes the prior-filed application should not be construed as meaning that applicant is entitled to the claim for benefit of priority to the prior-filed application noted thereon. Accordingly, the examiner will, in due course, consider this benefit claim and determine whether the application is entitled to the benefit of the earlier filing date.

A corrected Filing Receipt, which includes the priority claim to the prior-filed nonprovisional application, accompanies this decision on petition.

This application is being forwarded to Technology Center Art Unit 2441 for consideration by the examiner of applicant's entitlement to claim benefit of priority under 35 U.S.C. § 120 to the prior-filed applications.

Any inquiries concerning this decision may be directed to the undersigned at (571) 272-3226. All other inquiries concerning either the examination procedures or status of the application should be directed to the Technology Center at (571) 272-2100.

Andrea Smith
Petitions Examiner
Office of Petitions

ATTACHMENT: Corrected Filing Receipt

UNITED STATES PATENT AND TRADEMARK OFFICE

UNITED STATES DEPARTMENT OF COMMERCE
United States Patent and Trademark Office
Address: COMMISSIONER FOR PATENTS
P.O. Box 1450
Alexandria, Virginia 22313-1450
www.uspto.gov

APPLICATION NUMBER	FILING or 371(c) DATE	GRP ART UNIT	FIL FEE REC'D	ATTY.DOCKET.NO	TOT CLAIMS	IND CLAIMS
11/973,622	10/09/2007	2441	945	CS002	16	4

CONFIRMATION NO. 2552

CORRECTED FILING RECEIPT

89322
Garlick Harrison & Markison (CS)
P.O.Box 160727
Austin, TX 78716

OC000000044965816

Date Mailed: 12/15/2010

Receipt is acknowledged of this non-provisional patent application. The application will be taken up for examination in due course. Applicant will be notified as to the results of the examination. Any correspondence concerning the application must include the following identification information: the U.S. APPLICATION NUMBER, FILING DATE, NAME OF APPLICANT, and TITLE OF INVENTION. Fees transmitted by check or draft are subject to collection. Please verify the accuracy of the data presented on this receipt. **If an error is noted on this Filing Receipt, please submit a written request for a Filing Receipt Correction. Please provide a copy of this Filing Receipt with the changes noted thereon. If you received a "Notice to File Missing Parts" for this application, please submit any corrections to this Filing Receipt with your reply to the Notice. When the USPTO processes the reply to the Notice, the USPTO will generate another Filing Receipt incorporating the requested corrections**

Applicant(s)

S. Christopher Gladwin, Chicago, IL;
Greg Dhuse, Chicago, IL;
Vance Thornton, Chicago, IL;
Ilya Volvovski, Chicago, IL;
Jamie Bellanca, Chicago, IL;

Power of Attorney: The patent practitioners associated with Customer Number 89322

Domestic Priority data as claimed by applicant

This application is a CIP of 11/241,555 09/30/2005

Foreign Applications

If Required, Foreign Filing License Granted: 01/04/2008

The country code and number of your priority application, to be used for filing abroad under the Paris Convention, is **US 11/973,622**

Projected Publication Date: Not Applicable

Non-Publication Request: No

Early Publication Request: No
**** SMALL ENTITY ****

Title

Smart access to a dispersed data storage network

Preliminary Class

709

PROTECTING YOUR INVENTION OUTSIDE THE UNITED STATES

Since the rights granted by a U.S. patent extend only throughout the territory of the United States and have no effect in a foreign country, an inventor who wishes patent protection in another country must apply for a patent in a specific country or in regional patent offices. Applicants may wish to consider the filing of an international application under the Patent Cooperation Treaty (PCT). An international (PCT) application generally has the same effect as a regular national patent application in each PCT-member country. The PCT process **simplifies** the filing of patent applications on the same invention in member countries, but **does not result** in a grant of "an international patent" and does not eliminate the need of applicants to file additional documents and fees in countries where patent protection is desired.

Almost every country has its own patent law, and a person desiring a patent in a particular country must make an application for patent in that country in accordance with its particular laws. Since the laws of many countries differ in various respects from the patent law of the United States, applicants are advised to seek guidance from specific foreign countries to ensure that patent rights are not lost prematurely.

Applicants also are advised that in the case of inventions made in the United States, the Director of the USPTO must issue a license before applicants can apply for a patent in a foreign country. The filing of a U.S. patent application serves as a request for a foreign filing license. The application's filing receipt contains further information and guidance as to the status of applicant's license for foreign filing.

Applicants may wish to consult the USPTO booklet, "General Information Concerning Patents" (specifically, the section entitled "Treaties and Foreign Patents") for more information on timeframes and deadlines for filing foreign patent applications. The guide is available either by contacting the USPTO Contact Center at 800-786-9199, or it can be viewed on the USPTO website at http://www.uspto.gov/web/offices/pac/doc/general/index.html.

For information on preventing theft of your intellectual property (patents, trademarks and copyrights), you may wish to consult the U.S. Government website, http://www.stopfakes.gov. Part of a Department of Commerce initiative, this website includes self-help "toolkits" giving innovators guidance on how to protect intellectual property in specific countries such as China, Korea and Mexico. For questions regarding patent enforcement issues, applicants may call the U.S. Government hotline at 1-866-999-HALT (1-866-999-4158).

LICENSE FOR FOREIGN FILING UNDER

Title 35, United States Code, Section 184

Title 37, Code of Federal Regulations, 5.11 & 5.15

GRANTED

The applicant has been granted a license under 35 U.S.C. 184, if the phrase "IF REQUIRED, FOREIGN FILING LICENSE GRANTED" followed by a date appears on this form. Such licenses are issued in all applications where the conditions for issuance of a license have been met, regardless of whether or not a license may be required as

set forth in 37 CFR 5.15. The scope and limitations of this license are set forth in 37 CFR 5.15(a) unless an earlier license has been issued under 37 CFR 5.15(b). The license is subject to revocation upon written notification. The date indicated is the effective date of the license, unless an earlier license of similar scope has been granted under 37 CFR 5.13 or 5.14.

This license is to be retained by the licensee and may be used at any time on or after the effective date thereof unless it is revoked. This license is automatically transferred to any related applications(s) filed under 37 CFR 1.53(d). This license is not retroactive.

The grant of a license does not in any way lessen the responsibility of a licensee for the security of the subject matter as imposed by any Government contract or the provisions of existing laws relating to espionage and the national security or the export of technical data. Licensees should apprise themselves of current regulations especially with respect to certain countries, of other agencies, particularly the Office of Defense Trade Controls, Department of State (with respect to Arms, Munitions and Implements of War (22 CFR 121-128)); the Bureau of Industry and Security, Department of Commerce (15 CFR parts 730-774); the Office of Foreign AssetsControl, Department of Treasury (31 CFR Parts 500+) and the Department of Energy.

NOT GRANTED

No license under 35 U.S.C. 184 has been granted at this time, if the phrase "IF REQUIRED, FOREIGN FILING LICENSE GRANTED" DOES NOT appear on this form. Applicant may still petition for a license under 37 CFR 5.12, if a license is desired before the expiration of 6 months from the filing date of the application. If 6 months has lapsed from the filing date of this application and the licensee has not received any indication of a secrecy order under 35 U.S.C. 181, the licensee may foreign file the application pursuant to 37 CFR 5.15(b).

UNITED STATES PATENT AND TRADEMARK OFFICE

Commissioner for Patents
United States Patent and Trademark Office
P.O. Box 1450
Alexandria, VA 22313-1450
www.uspto.gov

ALTMAN & MARTIN
6 BEACON ST, STE 600
BOSTON MA 02108

MAILED
AUG 09 2010
OFFICE OF PETITIONS

In re Application of	:	
Ronald E. WYRICK	:	
Application No. 11/973,711	:	NOTICE
Filed: October 09, 2007	:	
Attorney Docket No. **WA39-037**	:	

This is a notice regarding your request for acceptance of a fee deficiency submission under 37 CFR 1.28.

The Office no longer investigates or rejects original or reissue patent under 37 CFR 1.56. **1098 Off. Gaz. Pat. Office 502 (January 3, 1989)**. Therefore, nothing in this Notice is intended to imply that an investigation was done.

Your fee deficiency submission under 37 CFR 1.28 is hereby **ACCEPTED**.

This patent is no longer entitled to small entity status. Accordingly, all future fees paid in this patent must be paid at the large entity rate.

The application file does not indicate a change of address has been filed in this case, although the address given on the petition differs from the address of record. A change of address should be filed in this case in accordance with MPEP 601.03. A courtesy copy of this decision is being mailed to the address noted on the petition. However, until otherwise instructed, all future correspondence regarding this application will be mailed solely to the address of record.

There is no indication that the person signing the petition was ever given a power of attorney to prosecute the application. If the person signing the petition desires to receive future correspondence regarding this application, the appropriate power of attorney document must be submitted. While a courtesy copy of this decision is being mailed to the person signing the petition, all future correspondence will be directed to the address currently of record until appropriate instructions are received.

Inquiries related to this communication should be directed to the undersigned at (571) 272-2783.

/Tredelle D. Jackson/
Paralegal Specialist
Office of Petitions

cc: **JAMES LAKE**
WELLS ST. JOHN P.S
601 W. FIRST AVENUE, SUITE 1300
SPOKANE WA 99201-3828

UNITED STATES PATENT AND TRADEMARK OFFICE

Commissioner for Patents
United States Patent and Trademark Office
P.O. Box 1450
Alexandria, VA 22313-1450
www.uspto.gov

MICROSOFT CORPORATION
ONE MICROSOFT WAY
REDMOND, WA 98052

MAILED
JUL 06 2011
OFFICE OF PETITIONS

In re Application of	:	
Frank Soong et al	:	
Application No. 11/973,735	:	DECISION ON PETITION
Filed: October 10, 2007	:	
Attorney Docket No. 320667.01	:	

This is a decision on the petition, filed May 23, 2011, which is being treated as a petition under 37 CFR 1.8(b), requesting withdrawal of the holding of abandonment in the above-identified application.

The petition is **GRANTED**.

This application was held abandoned for failure to timely respond to the Office action of October 1, 2010, which set a three (3) month shortened statutory period for reply. Three (3) month extension of time pursuant to the provisions of 37 CFR 1.136(a) was obtained. Accordingly, a reply was due on or before April 1, 2011.

Office record show a timely reply was received under 37 CFR 1.8 on April 11, 2011 (certificate of transmission/mailing April 1, 2011), which include the following; an amendment, three-month extension of time and transmittal sheet.

The petition satisfies the above requirements of 37 CFR 1.8(b). Accordingly, the holding of abandonment for failure to timely file a reply to the Office action of October 1, 2010 is hereby withdrawn and the application restored to pending status.

Telephone inquires concerning this decision should be directed to Irvin Dingle at (571) 272-3210.

This matter is being referred to Technology Center AU 2626 for appropriate action in the normal course of business on the reply received on April 11, 2011 (certificate of transmission/mailing April 1, 2011).

Irvin Dingle
Petitions Examiner
Office of Petitions

UNITED STATES PATENT AND TRADEMARK OFFICE

Commissioner for Patents
United States Patent and Trademark Office
P.O. Box 1450
Alexandria, VA 22313-1450
www.uspto.gov

December 16, 2011

BUTZEL LONG
IP DOCKETING DEPT
350 SOUTH MAIN STREET
SUITE 300
ANN ARBOR MI 48104

In re Application of	:	
Xiangqun Zeng et al.	:	**DECISION ON PETITION**
Application No. 11973772	:	
Filed: 10/9/2007	:	***ACCEPTANCE OF COLOR***
Attorney Docket No. OAKLAND 4.1-16	:	***DRAWINGS***

This is a decision on the Petition to Accept Color Drawings under 37 C.F.R 1.84 (a) (2), received in the United States Patent and Trademark Office (USPTO) October 9, 2007.

The petition is **GRANTED**.

A grantable petition under 37 C.F.R. 1.84(a) (2) must be accompanied by the following.

1. The fee set forth under 37 C.F.R. 1.17(h),
2. Three (3) sets of the color drawings in question, or (1) set if filed via EFS, and
3. The specification contains appropriate language referring to the color drawings as the first paragraph in that portion of the specification relating to the brief description of the drawings.

The petition was accompanied by all of the required fees and drawings. The specification contains the appropriate language. Therefore, the petition is GRANTED.

Telephone inquires relating to this decision may be directed to the undersigned in the Office of Data Management at 571-272-4200.

/Don Fairchild/
Office of Data Management
Publications Branch

UNITED STATES PATENT AND TRADEMARK OFFICE

Commissioner for Patents
United States Patent and Trademark Office
P.O. Box 1450
Alexandria, VA 22313-1450
www.uspto.gov

MAILED
MAR 09 2011
OFFICE OF PETITIONS

JOHN M. NOVOSEL
12708 PEMBROKE LANE
LEAWOOD, KS 66209

In re Application of :
John Michael Novosel, Sr. :
Application No. 11/973,838 : ON PETITION
Filed: October 10, 2007 :
Attorney Docket No.: 102507 :

This is a decision in response to the petition filed January 25, 2011, which is being treated as a petition under 37 CFR 1.181 (no fee), requesting withdrawal of the holding of abandonment in the above-identified application.

The petition is **GRANTED**.

The application was held abandoned for failure to reply to in a timely manner to the Restriction Requirement, mailed April 14, 2009, which set a shortened statutory period for reply of one (1) month or thirty (30) days (whichever is later). A Notice of Abandonment was mailed on February 19, 2010. On January 25, 2011, the present petition was filed.

Petitioner states that the Notice of Abandonment was not received and that the holding of abandonment was recently discovered. Accordingly on January 25, 2011, the present petition was filed. Petitioner argues that the Notice of Abandonment was mailed in error. Petitioner explains that an appropriate 1-month petition for extension of time was filed on May 17, 2009, [sic] May 18, 2009, followed by a "*bone fide* attempt" to reply to the outstanding Office action on June 1, 2009.

A review of the record confirms that petitioner is correct. In view of the filing of an appropriate request for extension of time and fee on May 18, 2009, the response period of May 14, 2009 was properly extended to June 14, 2009. Therefore, response in the form of an amendment, including an election of the invention to be examined, filed June 1, 2009 is considered timely.

Consequently, the holding of abandonment for failure to timely file a response to the Office communication of April 14, 2009 is withdrawn and the application is restored to pending status.

The Notice of Abandonment mailed February 19, 2010 is hereby vacated.

This application is being referred to Technology Center AU 3711 for appropriate action in the normal course of business on the reply received June 1, 2009.

Telephone inquiries concerning this decision may be directed to the undersigned at (571) 272-3204. All other inquiries regarding this application should be directed to the Technology Center.

/SDB/

Sherry D. Brinkley
Petitions Examiner
Office of Petitions

UNITED STATES PATENT AND TRADEMARK OFFICE

Commissioner for Patents
United States Patent and Trademark Office
P.O. Box 1450
Alexandria, VA 22313-1450
www.uspto.gov

THOMPSON & KNIGHT, LLP
PATENT PROPERTY DEPARTMENT
1722 ROUTH STREET, SUITE 1500
DALLAS, TX 75201-2533

MAILED

OCT 05 2010

OFFICE OF PETITIONS

In re Application of
Carl H. Duke
Application No. 11/973,857
Filed: October 10, 2007
Attorney Docket No. 406823

DECISION ON PETITION
TO WITHDRAW
FROM RECORD

This is a decision on the Request to Withdraw as attorney or agent of record under 37 C.F.R. § 1.36(b), filed August 26, 2010.

The request is **NOT APPROVED**.

A grantable request to withdraw as attorney/agent of record must be signed by every attorney/agent seeking to withdraw or contain a clear indication that one attorney is signing on behalf of another/others.

The Office strongly encourages practitioner(s) requesting withdrawal from representation as practitioner of record in an application to review the record to determine whether he or she is, in fact, of record and how he or she was made of record. The practitioner(s) should determine whether he or she was appointed by naming each practitioner individually or through the use of a Customer Number. If the practitioner(s) were appointed by a specific designation, then the request should ask that each specified practitioner be withdrawn and should list each practitioner(s) in the Request. Similarly, if practitioner(s) was appointed by a Customer Number, the practitioner(s) should ensure that the correct number is provided in the Request Additionally, as set forth in MPEP 403(I), the addition or deletion of a practitioner from the list of persons associated with a Customer Number should be done by way of a *Request for Customer umber Data Change* (PTO/SB/124) and not a *Request for Withdrawal As Attorney or Agent and Change of Correspondence Address* (PTO/SB/83).

The request cannot be approved because practitioners were appointed by customer number. Practitioners must withdraw in the same manner that they were appointed.

All future communications from the Office will continue to be directed to the above-listed address until otherwise notified by applicant.

Telephone inquiries concerning this decision should be directed to undersigned at 571-272-1642. All other inquiries concerning the examination or status of this application should be directed to the Technology Center.

/AMW/
April M. Wise
Petitions Examiner
Office of Petitions

cc: CARL H. DUKE
5220 TED STREET
HOUSTON, TX 77040

UNITED STATES PATENT AND TRADEMARK OFFICE

Commissioner for Patents
United States Patent and Trademark Office
P.O. Box 1450
Alexandria, VA 22313-1450
www.uspto.gov

THOMPSON & KNIGHT, LLP
PATENT PROPERTY DEPARTMENT
1722 ROUTH STREET
SUITE 1500
DALLAS, TX 75201-2533

MAILED

DEC 07 2010

OFFICE OF PETITIONS

In re Application of
Carl H. Duke
Application No. 11/973,857
Filed: October 10, 2007
Attorney Docket No. 406823

DECISION ON PETITION
TO WITHDRAW
FROM RECORD

This is a decision on the renewed Request to Withdraw as attorney or agent of record under 37 C.F.R. § 1.36(b), filed October 14, 2010.

The request is **NOT APPROVED**.

A grantable request to withdraw as attorney/agent of record must be signed by every attorney/agent seeking to withdraw or contain a clear indication that one attorney is signing on behalf of another/others.

Petitioner should note that the Office will no longer accept address changes to a new practitioner of law firm filed with a Request, absent the filing of a power of attorney to the new representative. The Office will either change the correspondence address of record to the most current address information provided for the assignee of the entire interest who properly became of record under 37 CFR 3.71 or, the most current address information provided for the first named inventor.

Accordingly, the request to withdraw from record does not include an acceptable current correspondence address for future communications from the Office.

All future communications from the Office will continue to be directed to the above-listed address until otherwise notified by applicant.

Telephone inquiries concerning this decision should be directed to undersigned at 571-272-1642. All other inquiries concerning the examination or status of this application should be directed to the Technology Center.

/AMW/
April M. Wise
Petitions Examiner
Office of Petitions

UNITED STATES PATENT AND TRADEMARK OFFICE

Commissioner for Patents
United States Patent and Trademark Office
P.O. Box 1450
Alexandria, VA 22313-1450
www.uspto.gov

THOMPSON & KNIGHT, LLP
PATENT PROPERTY DEPARTMENT
1722 ROUTH STREET
SUITE 1500
DALLAS, TX 75201-2533

MAILED

JAN 25 2011

OFFICE OF PETITIONS

In re Application of

Carl H. Duke
Application No. 11/973,857
Filed: October 10, 2007
Attorney Docket No. 406823

DECISION ON PETITION
TO WITHDRAW
FROM RECORD

This is a decision on the renewed Request to Withdraw as attorney or agent of record under 37 C.F.R. § 1.36(b), filed December 17, 2010.

The request is **APPROVED**.

A grantable request to withdraw as attorney/agent of record must be signed by every attorney/agent seeking to withdraw or contain a clear indication that one attorney is signing on behalf of another/others.

The request was signed by James J. Murphy on behalf of all attorneys of record who are associated with this application. All attorneys/agents associated with this application have been withdrawn. Applicant is reminded that there is no attorney of record at this time.

The correspondence address of record has been changed and the new correspondence address is the address indicated below.

There is an outstanding Office action mailed January 10, 2011 that requires a reply from the applicant.

Telephone inquiries concerning this decision should be directed to undersigned at 571-272-1642. All other inquiries concerning the examination or status of this application should be directed to the Technology Center.

/AMW/
April M. Wise
Petitions Examiner
Office of Petitions

cc: CARL H. DUKE
5220 TED STREET
HOUSTON, TX 77040

UNITED STATES PATENT AND TRADEMARK OFFICE

UNITED STATES DEPARTMENT OF COMMERCE
United States Patent and Trademark Office
Address: COMMISSIONER FOR PATENTS
P.O. Box 1450
Alexandria, Virginia 22313-1450
www.uspto.gov

APPLICATION NUMBER	FILING OR 371(C) DATE	FIRST NAMED APPLICANT	ATTY. DOCKET NO./TITLE
11/973,857	10/10/2007	Carl H. Duke	406823

CONFIRMATION NO. 3823

POWER OF ATTORNEY NOTICE

26133
THOMPSON & KNIGHT, L.L.P.
PATENT PROPERTY DEPARTMENT
1722 ROUTH STREET, SUITE 1500
DALLAS, TX 75201-2533

OC000000004555314 3

Date Mailed: 01/19/2011

NOTICE REGARDING CHANGE OF POWER OF ATTORNEY

This is in response to the Power of Attorney filed 12/17/2010.

- The withdrawal as attorney in this application has been accepted. Future correspondence will be mailed to the new address of record. 37 CFR 1.33.

/amwise/

Office of Data Management, Application Assistance Unit (571) 272-4000, or (571) 272-4200, or 1-888-786-0101

UNITED STATES PATENT AND TRADEMARK OFFICE

Commissioner for Patents
United States Patent and Trademark Office
P.O. Box 1450
Alexandria, VA 22313-1450
www.uspto.gov

Squire, Sanders & Dempsey L.L.P.
275 BATTERY STREET, SUITE 2600
SAN FRANCISCO CA 94111-3356

MAILED
AUG 27 2010
OFFICE OF PETITIONS

In re Application of :
SALMONSEN et al. :
Application No. 11/973,877 :
Filed: October 10, 2007 :
Attorney Docket No. **055590.00044** :

DECISION ON PETITION
TO MAKE SPECIAL
37 CFR 1.102

This is a decision on the petition under 37 CFR 1.102, filed July 29, 2010, to make the above-identified application special under the Patent Application Backlog Reduction Stimulus Plan which is a pilot program set forth at 74 Federal Register Notice 62285 (November 27, 2009) and 75 Federal register Notice 36063 (June 24, 2010).

The petition is **GRANTED**.

A grantable petition to make an application special under 37 CFR 1.102 and the pilot program as set forth in 74 FR 62285 and 75 FR 36063 must be directed to a nonprovisional application filed prior to October 1, 2009.

The USPTO will accord special status for examination under Patent Application Backlog Reduction Stimulus Plan under the following conditions:

(1) The application for which special status is sought is a nonprovisional application that has an actual filing date earlier than October 1, 2009;

(2) The applicant has another copending nonprovisional application that has an actual filing date earlier than October 1, 2009, and is complete under 37 CFR 1.53;

(3) The application for which special status is sought and the other copending nonprovisional application either are owned by the same party as of October 1, 2009, or name at least one inventor in common;

(4) The applicant files a letter of express abandonment under 37 CFR 1.138(a) in the copending nonprovisional application before it has been taken up for examination and

a) include a statement that the applicant has not and will not file a new application that claims the same invention claimed in the expressly abandoned application;

b) includes with the letter of express abandonment a statement that the applicant has not and will not file an application that claims the benefit of the

expressly abandoned application under any provision of title 35, United States Code, and

c) the applicant agrees not to request a refund of any fees paid in the expressly abandoned application; and

(5) The applicant files a petition under 37 CFR 1.102 in the application for which special status is sought that

a) includes a specific identification of the relationship between the applications that qualifies the application for special status;

b) identifies, by application number if available, the application that is being expressly abandoned;

c) provides a statement certifying that applicant has not filed petitions in more than fourteen (14) other applications requesting special status under this program; and

d) provides a statement that applicant agrees to make an election without traverse in a telephonic interview if the Office determines that the claims of the application to be made special are directed to two or more independent and distinct inventions.

The requirement for a fee for consideration of the petition to make special for applications pertaining to Patent Application Backlog Reduction Stimulus Plan has been waived.

The instant petition complies with the conditions required under Patent Application Backlog Reduction Stimulus Plan. Accordingly, the above-identified application has been accorded "special" status.

Telephone inquires concerning this decision should be directed to Brian W. Brown at 571-272-5338.

All other inquires concerning either the examination or status of the application should be directed to the Technology Center.

The application is being forwarded to the Office of Patent Application Processing for further processing commensurate with this decision.

Brian W. Brown
Petitions Examiner
Office of Petitions

SPE RESPONSE FOR CERTIFICATE OF CORRECTION

DATE : August 22, 2011

TO SPE OF : ART UNIT 3734

SUBJECT : Request for Certificate of Correction for Appl. No.: 11/973,569 891 Patent No.: 7964569 B2

CofC mailroom date: 07/19/11

Please respond to this request for a certificate of correction within 7 days.

FOR IFW FILES:

Please review the requested changes/corrections as shown in the **COCIN** document(s) in the IFW application image. No new matter should be introduced, nor should the scope or meaning of the claims be changed.

Please complete the response (see below) and forward the completed response to scanning using document code **COCX**.

FOR PAPER FILES:

Please review the requested changes/corrections as shown in the attached certificate of correction. Please complete this form (see below) and forward it with the file to:

Certificates of Correction Branch (CofC)
Randolph Square – 9D10-A
Palm Location 7580

Note: Should the changes be made?

RoChaun Hardwick
Certificates of Correction Branch
571 272-0470

Thank You For Your Assistance

The request for issuing the above-identified correction(s) is hereby:
Note your decision on the appropriate box.

XXXX ☐ **Approved** — **All** changes apply.

☐ **Approved in Part** — Specify below which changes **do not** apply.

☐ **Denied** — State the reasons for denial below.

Comments: The C of C has been approved.

/S. A. Jiang/ — **SPE**

1623 — **Art Unit**

SPE RESPONSE FOR CERTIFICATE OF CORRECTION

DATE : August 22, 2011

TO SPE OF : ART UNIT 3734

SUBJECT : Request for Certificate of Correction for Appl. No.: 11/973,569 Patent No.:7964569 B2

CofC mailroom date: 07/19/11

Please respond to this request for a certificate of correction within 7 days.

FOR IFW FILES:

Please review the requested changes/corrections as shown in the **COCIN** document(s) in the IFW application image. No new matter should be introduced, nor should the scope or meaning of the claims be changed.

Please complete the response (see below) and forward the completed response to scanning using document code **COCX**.

FOR PAPER FILES:

Please review the requested changes/corrections as shown in the attached certificate of correction. Please complete this form (see below) and forward it with the file to:

Certificates of Correction Branch (CofC)
Randolph Square – 9D10-A
Palm Location 7580

Note: Should the changes be made?

RoChaun Hardwick
Certificates of Correction Branch
571 272-0470

Thank You For Your Assistance

The request for issuing the above-identified correction(s) is hereby:
Note your decision on the appropriate box.

XXXX ☐ **Approved** — **All** changes apply.

☐ **Approved in Part** — Specify below which changes **do not** apply.

☐ **Denied** — State the reasons for denial below.

Comments: The C of C has been approved.

/S. A. Jiang/ — **SPE**

1623 — **Art Unit**

UNITED STATES PATENT AND TRADEMARK OFFICE

Commissioner for Patents
United States Patent and Trademark Office
P.O. Box 1450
Alexandria, VA 22313-1450
www.uspto.gov

November 8, 2011

Kilpatrick Townsend & Stockton LLP
Adobe Systems, Inc. 58083
1100 Peachtree Street
Suite 2800
Atlanta GA 30309-4530

In re Application of	:	
Anant Gilra et al.	:	**DECISION ON PETITION**
Application No. 11973952	:	
Filed: 10/11/2007	:	***ACCEPTANCE OF COLOR***
Attorney Docket No. 58083/346612 (B539)	:	***DRAWINGS***

This is a decision on the Petition to Accept Color Drawings under 37 C.F.R 1.84 (a) (2), received in the United States Patent and Trademark Office (USPTO) October 11, 2007.

The petition is **GRANTED**.

A grantable petition under 37 C.F.R. 1.84(a) (2) must be accompanied by the following.

1. The fee set forth under 37 C.F.R. 1.17(h),
2. Three (3) sets of the color drawings in question, or (1) set if filed via EFS, and
3. The specification contains appropriate language referring to the color drawings as the first paragraph in that portion of the specification relating to the brief description of the drawings.

The petition was accompanied by all of the required fees and drawings. The specification contains the appropriate language. Therefore, the petition is GRANTED.

Telephone inquires relating to this decision may be directed to the undersigned in the Office of Data Management at 571-272-4200.

/Don Fairchild/
Office of Data Management
Publications Branch

UNITED STATES PATENT AND TRADEMARK OFFICE

Commissioner for Patents
United States Patent and Trademark Office
P.O. Box 1450
Alexandria, VA 22313-1450
www.uspto.gov

MAILED
JUN 24 2011
OFFICE OF PETITIONS

DEPARTMENT OF THE AIR FORCE
AFMC LO/JAZ
BLdg 11, Room D18
WRIGHT-PATTERSON AFB, OH 45433-7109

In re Application of Yaghjian et al. :
Application No. 11/973,982 : Decision on Petition
Filing Date: October 1, 2007 :
Attorney Docket No. AFD 953 :

This is a decision on the petition under 37 CFR 1.137(b) filed June 1, 2011, to revive the application.

The petition is **granted**.

The above-identified application became abandoned for failure to timely file a proper reply in response to the final Office action mailed May 25, 2010. A two-month extension of time was obtained under the provisions of 37 CFR 1.136(a). Therefore, the application became abandoned on October 26, 2010. A Notice of Abandonment was mailed on March 24, 2011.

The instant petition requests revival of the application.

A grantable petition under 37 CFR 1.137(b) must be accompanied by:

(1) The reply required to the outstanding Office action or notice, unless previously filed,
(2) The petition fee,
(3) A statement that the entire delay in filing the required reply from the due date for the reply until the filing of a grantable petition pursuant to 37 CFR 1.137(b) was unintentional, and
(4) A terminal disclaimer and fee if the application was filed on or before June 8, 1995, or if the application is a design application.

The petition satisfies the requirements of 37 CFR 1.137(b) in so far as petitioner has supplied a reply in the form of an amendment and RCE, the required petition fee of $1,620, and the required statement of unintentional delay. Therefore, the petition is granted and the application is revived.

Technology Center Art Unit 2821 will be informed of the instant decision and the application, including the RCE and amendment filed June 1, 2011, will be further examined in due course.

Telephone inquiries regarding this communication should be directed to Petitions Attorney Steven Brantley at (571) 272-3203.

Charles Steven Brantley
Senior Petitions Attorney
Office of Petitions

UNITED STATES PATENT AND TRADEMARK OFFICE

Commissioner for Patents
United States Patent and Trademark Office
P.O. Box 1450
Alexandria, VA 22313-1450
www.uspto.gov

MAILED

AUG 12 2011 Paper No.

OFFICE OF PETITIONS

MERCK
P O BOX 2000
RAHWAY NJ 07065-0907

In re Application No. 11/974,067	:	
Scarselli et al.	:	DECISION ON
Filed: October 11, 2007	:	REQUEST FOR
Attorney Docket No. ITR0119Y	:	RECONSIDERATION OF
Title: TELOMERASE REVERSE	:	PATENT TERM ADJUSTMENT
TRANSCRIPTASE FUSION PROTEIN,	:	
NUCLEOTIDES ENCODING IT, AND USES	:	
THEREOF	:	

This is in response to the "APPLICATION FOR PATENT TERM ADJUSTMENT UNDER 37 C.F.R. §1.705(b)," filed on August 2, 2011. Applicant submits that the correct patent term adjustment to be indicated on the patent is six hundred and fifty-eight (658) days, not three hundred and sixty-three (363) days as calculated by the Office as of the mailing of the initial determination of patent term adjustment. Applicant requests this correction solely on the basis that the Office will take in excess of three years to issue this patent.

To the extent that the instant application for patent term adjustment requests reconsideration of the patent term adjustment as it relates to the Office's failure to issue the patent within 3 years of the filing date, the application for patent term adjustment under 37 CFR 1.705(b) is **DISMISSED as PREMATURE**.

Knowledge of the actual date the patent issues is required to calculate the amount, if any, of additional patent term patentee is entitled to for Office failure to issue the patent within 3 years. See § 1.702(b). (This is true even where a request for continued examination (RCE) was filed). The computer will not undertake the § 1.702(b) calculation until the actual date of issuance of the patent has been determined. Likewise, the computer will not calculate any further Office delay under § 1.702(a)(4) or applicant delay under § 1.704(c)(10) until the actual date of issuance of the patent has been determined. As

such, the Office cannot make a determination on the correctness of the patent term adjustment until the patent has issued.

Requesting reconsideration of the patent term adjustment to be indicated on the patent under 37 CFR 1.705(b) based on the initial determination of patent term adjustment and a projected issuance date of the patent (or even the filing date of the request for continued examination) is premature. Accordingly, it is appropriate to dismiss as premature such a request.

Rather than file an application for patent term adjustment under 37 CFR 1.705(b) contesting the 37 CFR 1.702(b) calculation at the time of the mailing of the notice of allowance, Applicant is advised that she may wait until the time of the issuance of the patent and file a request for reconsideration of the patent term adjustment pursuant to 37 CFR 1.705(d). As the USPTO does not calculate the amount of time earned pursuant to 37 CFR 1.702(b) until the time of the issuance of the patent, the Office will consider any request for reconsideration of the patent term adjustment due to an error in the calculation of 37 CFR 1.702(b) to be timely if the request for reconsideration is filed within two months of the issuance of the patent. However, as to all other bases for contesting the initial determination of patent term adjustment received with the notice of allowance, Applicant must timely file an application for patent term adjustment prior to the payment of the issue fee.[1]

The Office acknowledges submission of the $200.00 fee set forth in 37 CFR 1.18(e). No additional fees are required.

Any request for reconsideration of the patent term adjustment indicated on the patent must be timely filed within 2 months after issuance pursuant to 37 CFR 1.705(d) and must include payment of the required fee under 37 CFR 1.18(e).

---

[1] For example, if Applicant disputes both the calculation of patent term adjustment under 37 CFR 1.702(a)(1) for Office failure to mail a first Office action or notice of allowance not later than fourteen months after the date on which the application was filed and under 37 CFR 1.702(b) for Office failure to issue a patent within three years of the actual filing date of the application, then Applicant must still timely file an application for patent term adjustment prior to the payment of the issue fee to contest the calculation of Office delay in issuing a first Office action or notice of allowance. See 37 CFR 1.705(b) and 35 U.S.C. 154(b)(3)(B). A dispute as to the calculation of the § 1.702(a)(1) period raised on request for reconsideration of patent term adjustment under 37 CFR 1.705(d) will be dismissed as untimely filed.

The Office of Data Management has been advised of this decision. This application is being referred to the Office of Data Management for issuance of the patent.

Telephone inquiries regarding this decision should be directed to the undersigned at (571) 272-3225.

/Paul Shanoski/
Paul Shanoski
Senior Attorney
Office of Petitions

UNITED STATES PATENT AND TRADEMARK OFFICE

UNITED STATES DEPARTMENT OF COMMERCE
United States Patent and Trademark Office
Address: COMMISSIONER FOR PATENTS
P.O. Box 1450
Alexandria, Virginia 22313-1450
www.uspto.gov

APPLICATION NO.	FILING DATE	FIRST NAMED INVENTOR	ATTORNEY DOCKET NO.	CONFIRMATION NO.
11/974,084	10/11/2007	George Eadon	2006-300-01 (O123)	3863

51444 7590 09/16/2010
Kraguljac & Kalnay, LLC - Oracle
4700 Rockside Road
Summit One, Suite 510
Independence, OH 44131

EXAMINER
CORRIELUS, JEAN M

ART UNIT	PAPER NUMBER
2162	

NOTIFICATION DATE	DELIVERY MODE
09/16/2010	ELECTRONIC

Please find below and/or attached an Office communication concerning this application or proceeding.

The time period for reply, if any, is set in the attached communication.

Notice of the Office communication was sent electronically on above-indicated "Notification Date" to the following e-mail address(es):

mary@kkpatent.com
ptomail@kkpatent.com

UNITED STATES PATENT AND TRADEMARK OFFICE

Commissioner for Patents
United States Patent and Trademark Office
P.O. Box 1450
Alexandria, VA 22313-1450
www.uspto.gov

KRAGULJAC & KALNAY, LLC - ORACLE
4700 ROCKSIDE ROAD
SUMMIT ONE, SUITE 510
INDEPENDENCE, OH 44131

In re Application of: EADON, et al.	)	
Application No. 11/974,084	)	DECISION ON PETITION FOR
Attorney Docket No. 2006-300-01 (O123)	)	SUPERVISORY REVIEW
Filed: 10/11/2007	)	UNDER *37 CFR §1.181*
For: REFERENCE PARTITIONED	)	
TABLES	)	

This is a decision on the petition under 37 CFR § 1.181, filed August 5, 2010, requesting the Commissioner to invoke his supervisory authority and withdraw the finality of the final Office action mailed June 10, 2010.

The petition is **DISMISSED AS MOOT**.

A review of the application file record indicates that a Request for Continued Examination (RCE) with the required fee was filed on 09 September 2010 and was processed and accepted.

37 C.F.R. § 1.114(d) states, in part:

> If an applicant timely files a submission and fee set forth in § 1.17(e), the Office will withdraw the finality of any Office action and the submission will be entered and considered. If an applicant files a request for continued examination under this section ...., it will be treated as a request to withdraw ... and to reopen prosecution of the application
> before the examiner.....

Pursuant to 37 C.F.R. § 1.114(d), the amendment filed 09 September 2010 was entered and forwarded to the examiner to consider and issue an appropriate Office communication.

Accordingly, the petition is **DISMISSED AS MOOT.**

Any inquiries related to this decision may be directed to Quality Assurance Specialist Rehana Perveen at (571) 272-3676.

/Rehana Perveen/
Rehana Perveen, QAS
Technology Center 2100
Computer Architecture and Software

UNITED STATES PATENT AND TRADEMARK OFFICE

Commissioner for Patents
United States Patent and Trademark Office
P.O. Box 1450
Alexandria, VA 22313-1450
www.uspto.gov

September 15, 2011

CHRISTIE, PARKER & HALE, LLP
PO BOX 7068
PASADENA CA 91109-7068

In re Application of	:	
Doty, Robert E. et, al	:	**DECISION ON PETITION**
Application No.11/974,134	:	
Filed: 10/10/2007	:	***ACCEPTANCE OF COLOR***
Attorney Docket No. 60009/H611	:	***DRAWINGS***

This is a decision on the Petition to Accept Color Drawings under 37 C.F.R 1.84 (a) (2), received in the United States Patent and Trademark Office (USPTO) October 10, 2007.

The petition is **GRANTED**.

A grantable petition under 37 C.F.R. 1.84(a) (2) must be accompanied by the following.

1. The fee set forth under 37 C.F.R. 1.17(h),
2. Three (3) sets of the color drawings in question, or (1) set if filed via EFS, and
3. The specification contains appropriate language referring to the color drawings as the first paragraph in that portion of the specification relating to the brief description of the drawings.

The petition was accompanied by all of the required fees and drawings. The specification contains the appropriate language. Therefore, the petition is GRANTED.

Telephone inquires relating to this decision may be directed to the undersigned in the Office of Data Management at 571-272-4200.

/Diane Terry/
Quality Control Specialist
Office of Data Management
Publications Branch

UNITED STATES PATENT AND TRADEMARK OFFICE

Commissioner for Patents
United States Patent and Trademark Office
P.O. Box 1450
Alexandria, VA 22313-1450
www.uspto.gov

TAFT, STETTINIUS & HOLLISTER LLP
SUITE 1800
425 WALNUT STREET
CINCINNATI OH 45202-3957

MAILED

MAR 25 2011

OFFICE OF PETITIONS

In re Application of	:	
BARKELOO, et al	:	
Application No. 11/974,190	:	DECISION ON PETITION
Filed: October 11, 2007	:	TO WITHDRAW
Attorney Docket No. TSP02-GN013	:	FROM RECORD
	:	

This is a decision on the Request to Withdraw as attorney or agent under 37 C.F.R. § 1.36(b) filed January 28, 2011.

The request is **NOT APPROVED**.

The Office will no longer approve requests from practitioners to withdraw from applications where the requesting practitioner is acting, or has acted, in a representative capacity pursuant to 37 CFR 1.34. In these situations, the practitioner is responsible for the correspondence the practitioner files in the application while acting in a representative capacity. As such, there is no need for the practitioner to obtain the Office's permission to withdraw from representation. However, practitioners acting in a representative capacity, like practitioners who have a power of attorney in the application, remain responsible for noncompliance with 37 CFR 1.56, as well as 37 CFR 10.18, with respect to documents they file.

A review of the file record indicates that Scott R. Stanley does not have power of attorney in this patent application. See 37 C.F.R. § 10.40. Accordingly, the request to withdraw under 37 C.F.R. § 1.36(b) is not applicable.

All future communications from the Office will continue to be directed to the above-identified address until otherwise properly notified.

Telephone inquires concerning this decision should be directed to the undersigned at (571) 272-6735.

/Diane C. Goodwyn/
Diane C. Goodwyn
Petitions Examiner
Office of Petitions

cc: SOMATIC DIGITAL LLC
P.O. BOX 30085
CINCINNATI OH 4505-3957

UNITED STATES PATENT AND TRADEMARK OFFICE

Commissioner for Patents
United States Patent and Trademark Office
P.O. Box 1450
Alexandria, VA 22313-1450
www.uspto.gov

JASON BARKELOO
C/O SOMATIC DIGITAL LLC
P.O. BOX 30085
CINCINNATI OH 45230

MAILED
JUN 30 2011
OFFICE OF PETITIONS

In re Application of	:	
Jason E. BARKELOO	:	
Application No. 11/974,190	:	DECISION ON PETITION
Filed: October 11, 2007	:	
Attorney Docket No. TSP02-GN013	:	

This is a decision on the petition under the unintentional provisions of 37 CFR 1.137(b), filed April 13, 2011, to revive the above-identified application.

The petition is **GRANTED**.

This application became abandoned for failure to timely pay the issue and publication fees on or before April 03, 2011, as required by the Notice of Allowance and Fee(s) Due, mailed January 03, 2011. Accordingly, the date of abandonment of this application is April 04, 2011.

The petition satisfies the requirements of 37 CFR 1.137(b) in that petitioner has supplied (1) the reply in the form of payment of the issue fee of $755.00 and the publication fee of $300.00, (2) the petition fee of $810.00; and (3) a proper statement of unintentional delay. The issue and publication fee payments are accepted as having been unintentionally delayed.

Telephone inquiries concerning this decision should be directed to the undersigned at (571) 272-4231.

This application is being referred to the Office of Data Management for processing into a patent.

Michelle R. Eason
Paralegal Specialist
Office of Petitions

UNITED STATES PATENT AND TRADEMARK OFFICE

Commissioner for Patents
United States Patent and Trademark Office
P.O. Box 1450
Alexandria, VA 22313-1450
www.uspto.gov

TAFT, STETTINIUS & HOLLISTER LLP
SUITE 1800
425 WALNUT STREET
CINCINNATI OH 45202-3957

MAILED

MAR 25 2011

OFFICE OF PETITIONS

In re Application of	:	
BARKELOO, et al	:	
Application No. 11/974,193	:	DECISION ON PETITION
Filed: October 11, 2007	:	TO WITHDRAW
Attorney Docket No. TSP02-GN012	:	FROM RECORD
	:	

This is a decision on the Request to Withdraw as attorney or agent under 37 C.F.R. § 1.36(b) filed January 28, 2011.

The request is **NOT APPROVED**.

The Office will no longer approve requests from practitioners to withdraw from applications where the requesting practitioner is acting, or has acted, in a representative capacity pursuant to 37 CFR 1.34. In these situations, the practitioner is responsible for the correspondence the practitioner files in the application while acting in a representative capacity. As such, there is no need for the practitioner to obtain the Office's permission to withdraw from representation. However, practitioners acting in a representative capacity, like practitioners who have a power of attorney in the application, remain responsible for noncompliance with 37 CFR 1.56, as well as 37 CFR 10.18, with respect to documents they file.

A review of the file record indicates that Scott R. Stanley does not have power of attorney in this patent application. See 37 C.F.R. § 10.40. Accordingly, the request to withdraw under 37 C.F.R. § 1.36(b) is not applicable.

All future communications from the Office will continue to be directed to the above-identified address until otherwise properly notified.

Telephone inquires concerning this decision should be directed to the undersigned at (571) 272-6735.

/Diane C. Goodwyn/
Diane C. Goodwyn
Petitions Examiner
Office of Petitions

cc: SOMATIC DIGITAL LLC
P.O. BOX 30085
CINCINNATI OH 45230

UNITED STATES PATENT AND TRADEMARK OFFICE

Commissioner for Patents
United States Patent and Trademark Office
P.O. Box 1450
Alexandria, VA 22313-1450
www.uspto.gov

JEREMY BLACK
P.O. BOX 3307
TUSTIN CA 92781

MAILED

MAR 03 2011

OFFICE OF PETITIONS

In re Application of	:	
Randolph J. Crowson, II	:	
Application No. 11/974,337	:	DECISION ON PETITION
Filed: October 11, 2007	:	
Attorney Docket No. 1002/203	:	

This is a decision on the petition under the unintentional provisions of 37 CFR 1.137(b), filed January 24, 2011, to revive the above-identified application.

The petition is **GRANTED**.

The application became abandoned for failure to reply in a timely manner to the final Office action mailed, May 14, 2009, which set a shortened statutory period for reply of three (3) months. No extensions of time under the provisions of 37 CFR 1.136(a) were obtained. Accordingly, the application became abandoned on August 15, 2009. A Notice of Abandonment was mailed December 10, 2009.

The petition satisfies the requirements of 37 CFR 1.137(b) in that petitioner has supplied (1) the reply in the form of a continuation, (2) the petition fee of $810.00, and (3) a proper statement of unintentional delay.

The above-identified application is being revived solely for purposes of continuity. As continuity has been established by this decision reviving the above-identified application, the above-identified application is again abandoned in favor of continuing application No. 12/590,645, filed November 12, 2009.

Telephone inquiries concerning this decision should be directed to the undersigned at (571) 272-7751.

Joan Olszewski
Petitions Examiner
Office of Petitions

UNITED STATES PATENT AND TRADEMARK OFFICE

Commissioner for Patents
United States Patent and Trademark Office
P.O. Box 1450
Alexandria, VA 22313-1450
www.uspto.gov

MAILED
JUL 27 2011
OFFICE OF PETITIONS

BOOTH UDALL, PLC
1155 W. RIO SALADO PKWY.
SUITE 101
TEMPE AZ 85281

In re Application of	:	
YEARACK	:	
Application No. 11/974,403	:	DECISION ON PETITION
Filed: October 11, 2007	:	
Attorney Docket No. 1676.002	:	

This is a decision on the petition under the unintentional provisions of 37 CFR 1.137(b), filed June 29, 2011, to revive the above-identified application.

The petition is **GRANTED.**

The application became abandoned for failure to reply in a timely manner to the Restriction Requirement, mailed September 17, 2009, which set a shortened statutory period for reply of one (1) month or thirty (30) days (whichever is later). No extensions of time under the provisions of 37 CFR 1.136(a) were obtained. Accordingly, the application became abandoned on October 18, 2009. A Notice of Abandonment was mailed May 20, 2010.

The petition satisfies the requirements of 37 CFR 1.137(b) in that petitioner has supplied (1) the reply in the form of an amendment and election; (2) the petition fee of $810; and (3) an adequate statement of unintentional delay.

37 CFR 1.137(b)(3) requires a statement that "the entire delay in filing the required reply from the due date for the reply until the filing of a grantable petition pursuant to 37 CFR 1.137(b) was unintentional." Since the statement appearing in the petition varies from the language required by 37 CFR 1.137(b)(3), the statement is being construed as the required statement. Petitioner must notify the Office if this is **not** a correct reading of the statement appearing in the petition.

Telephone inquiries concerning this decision should be directed to the undersigned at (571) 272-6735.

This application is being referred to Technology Center AU 3643 for appropriate action by the Examiner in the normal course of business on the reply received June 29, 2011.

/Diane C. Goodwyn/
Diane C. Goodwyn
Petitions Examiner
Office of Petitions

UNITED STATES PATENT AND TRADEMARK OFFICE

Commissioner for Patents
United States Patent and Trademark Office
P.O. Box 1450
Alexandria, VA 22313-1450
www.uspto.gov

ASHKAN NAJAFI, P.A.
6817 SOUTHPOINT PARKWAY
SUITE 2301
JACKSONVILLE FL 32216

MAILED
DEC 06 2010
OFFICE OF PETITIONS

In re Application of
Felix Vistro et al.
Application No. 11/974,474
Filed: October 12, 2007
Attorney Docket Number: 18534

ON PETITION

This is a decision on the petition, filed November 17, 2010 under 37 CFR 1.137(b)[1], to revive the above identified application.

The petition is **DISMISSED**.

Any request for reconsideration of this decision must be submitted within TWO (2) MONTHS from the mail date of this decision. Extensions of time under 37 CFR 1.136(a) are permitted. The reconsideration request should include a cover letter entitled "Renewed Petition under 37 CFR 1.137(b)." This is not a final agency decision.

This application became abandoned September 27, 2010 for failure to pay the issue fee in response to the Notice of Allowance mailed on June 24, 2010. Accordingly, the Notice of Abandonment was mailed on October 7, 2010.

This petition lacks items (1) and (2) under 37 CFR 1.137(b).

While the Issue Fee Transmittal indicated that payment of the issue fee was to be by

---

[1]Effective December 1, 1997, the provisions of 37 CFR 1.137(b) now provide that where the delay in reply was unintentional, a petition may be filed to revive an abandoned application or a lapsed patent pursuant to 37 CFR 1.137(b). A grantable petition filed under the provisions of 37 CFR 1.137(b) must be accompanied by:

(1) the required reply, unless previously filed. In a nonprovisional application abandoned for failure to prosecute, the required reply may be met by the filing of a continuing application. In an application or patent, abandoned or lapsed for failure to pay the issue fee or any portion thereof, the required reply must be the payment of the issue fee or any outstanding balance thereof.

(2) the petition fee as set forth in 37 CFR 1.17(m);

(3) a statement that the entire delay in filing the required reply from the due date for the reply until the filing of a grantable petition pursuant to 37 CFR 1.137(b) was unintentional. The Commissioner may required additional information where there is a question whether the delay was unintentional; and

(4) any terminal disclaimer (and fee as set forth in 37 CFR 1.20(d)) required pursuant to 37 CFR 1.137(c)).

credit card, and that the credit card form was attached, no such form was received with the papers filed on November 17, 2010.

Since no credit card was submitted and no authorizations for debiting a deposit account for any deficiencies have been granted, the required issue fee, publication fee and petition fee have not been paid.

The application will therefore remain in an abandoned status until such time as the fees indicated above have been paid.

Further correspondence with respect to this matter should be addressed as follows:

By mail: Mail Stop Petitions
Commissioner for Patents
P.O. Box 1450
Alexandria VA 22313-1450

By FAX: (571) 273-8300
Attn: Office of Petitions

Telephone inquiries concerning this matter may be directed to the undersigned Petitions Attorney at (571) 272-3212.

Patricia Faison-Ball

Patricia Faison-Ball
Senior Petitions Attorney
Office of Petitions

UNITED STATES PATENT AND TRADEMARK OFFICE

UNITED STATES DEPARTMENT OF COMMERCE
United States Patent and Trademark Office
Address: COMMISSIONER FOR PATENTS
P.O. Box 1450
Alexandria, Virginia 22313-1450
www.uspto.gov

APPLICATION NO.	FILING DATE	FIRST NAMED INVENTOR	ATTORNEY DOCKET NO.	CONFIRMATION NO.
11/974,479	10/12/2007	Jay Schneider	UTSD:1845US/10712341	5511

32425 7590 04/12/2012
FULBRIGHT & JAWORSKI L.L.P.
98 SAN JACINTO BOULEVARD
SUITE 1100
AUSTIN, TX 78701-4255

EXAMINER
OTTON, ALICIA L

ART UNIT	PAPER NUMBER
1626	

NOTIFICATION DATE	DELIVERY MODE
04/12/2012	ELECTRONIC

Please find below and/or attached an Office communication concerning this application or proceeding.

The time period for reply, if any, is set in the attached communication.

Notice of the Office communication was sent electronically on above-indicated "Notification Date" to the following e-mail address(es):

aopatent@fulbright.com

UNITED STATES PATENT AND TRADEMARK OFFICE

Commissioner for Patents
United States Patent and Trademark Office
P.O. Box 1450
Alexandria, VA 22313-1450
www.uspto.gov

April 12, 2012

FULBRIGHT & JAWORSKI L.L.P.
98 SAN JACINTO BOULEVARD
SUITE 1100
AUSTIN TX 78701-4255

In re Application of	:	
Jay Schneider et al.	:	**DECISION ON PETITION**
Application No. 11974479	:	
Filed: 10/12/2007	:	***ACCEPTANCE OF COLOR***
Attorney Docket No. UTSD:1845US/10712341	:	***DRAWINGS***

This is a decision on the Petition to Accept Color Drawings under 37 C.F.R 1.84 (a) (2), received in the United States Patent and Trademark Office (USPTO) October 12, 2007.

The petition is **GRANTED**.

A grantable petition under 37 C.F.R. 1.84(a) (2) must be accompanied by the following.

1. The fee set forth under 37 C.F.R. 1.17(h),
2. Three (3) sets of the color drawings in question, or (1) set if filed via EFS, and
3. The specification contains appropriate language referring to the color drawings as the first paragraph in that portion of the specification relating to the brief description of the drawings.

The petition was accompanied by all of the required fees and drawings. The specification contains the appropriate language. Therefore, the petition is GRANTED.

Telephone inquires relating to this decision may be directed to the undersigned in the Office of Data Management at 571-272-4200.

/Don Fairchild/
Office of Data Management
Publications Branch

UNITED STATES PATENT AND TRADEMARK OFFICE

Commissioner for Patents
United States Patent and Trademark Office
P.O. Box 1450
Alexandria, VA 22313-1450
www.uspto.gov

KENT S. BURNINGHAM, P.C.
466 SOUTH 500 EAST
SALT LAKE CITY UT 84102

MAILED

DEC 22 2010

OFFICE OF PETITIONS

In re Application of	:	
Morris et al.	:	
Application No. 11/974,492	:	DECISION ON PETITION
Filed: October 12, 2007	:	
Attorney Docket No. 2682.003US	:	

This is a decision on the petition under the unintentional provisions of 37 CFR 1.137(b), filed November 5, 2010, to revive the above-identified application.

The petition is **GRANTED**.

The application became abandoned for failure to reply in a timely manner to the non-final Office action mailed, April 12, 2010, which set a shortened statutory period for reply of three (3) months. No extensions of time under the provisions of 37 CFR 1.136(a) were obtained. Accordingly, the application became abandoned on July 13, 2010.

The petition satisfies the requirements of 37 CFR 1.137(b) in that petitioner has supplied (1) the reply in the form of an Amendment, (2) the petition fee of $810.00, and (3) a proper statement of unintentional delay.

Telephone inquiries concerning this decision should be directed to the undersigned at (571) 272-7751.

This application is being referred to Technology Center AU 1774 for further appropriate action by the Examiner in the normal course of business on the reply received.

Joan Olszewski

Joan Olszewski
Petitions Examiner
Office of Petitions

UNITED STATES PATENT AND TRADEMARK OFFICE

Commissioner for Patents
United States Patent and Trademark Office
P.O. Box 1450
Alexandria, VA 22313-1450
www.uspto.gov

DANIEL J. SCHLUE
ROETZEL & ANDRESS
222 S. MAIN ST.
AKRON OH 44308

MAILED

APR 25 2011

OFFICE OF PETITIONS

In re Application of	:	
Prabir K. DUTTA et al.	:	
Application No. 11/974,580	:	DECISION ON PETITION
Filed: October 15, 2007	:	
Attorney Docket No. 100090.0023	:	

This is a decision on the petition under the unintentional provisions of 37 CFR 1.137(b), filed February 03, 2011, to revive the above-identified application.

The petition is **GRANTED**.

The application became abandoned for failure to timely reply within the meaning of 37 CFR 1.113 to the final Office action, mailed June 15, 2010, which set a shortened statutory period for reply of three (3) months. No extensions of time under the provisions of 37 CFR 1.136(a) were obtained. Accordingly, the application became abandoned on September 16, 2010.

The petition satisfies the requirements of 37 CFR 1.137(b) in that petitioner has supplied (1) the reply in the form of a submission required by(37 CFR 1.114), (2) the petition fee of $810.00, and (3) a proper statement of unintentional delay. Accordingly, the reply to the final Office action of June 15, 2010 is accepted as having been unintentionally delayed.

Telephone inquiries concerning this decision should be directed to the undersigned at (571) 272-4231.

This application is being referred to Technology Center AU 1724 for appropriate action by the Examiner in the normal course of business on the reply received.

Michelle R. Eason

Michelle R. Eason
Paralegal Specialist
Office of Petitions

UNITED STATES PATENT AND TRADEMARK OFFICE

Commissioner for Patents
United States Patent and Trademark Office
P.O. Box 1450
Alexandria, VA 22313-1450
www.uspto.gov

Decision Date : September 28,2011

In re Application of :

Prabir Dutta

Application No : 11974580

Filed : 15-Oct-2007

Attorney Docket No : 100090.0023

DECISION ON PETITION

UNDER CFR 1.137(b)

This is an electronic decision on the petition under 37 CFR 1.137(b), filed September 28,2011, to revive the above-identified application.

The petition is **GRANTED.**

The above-identified application became abandoned for failure to reply in a timely manner to the Notice of Allowance and Issue Fee(s) Due. The date of abandonment is the day after the expiration date of the period set for reply in the Notice.

The electronic petition satisfies the conditions for revival pursuant to the provisions of 37 CFR 1.137(b) in that (1) the reply in the form of payment of the Issue Fee and the Publication Fee (if necessary); (2) the petition fee as set forth in 37 CFR 1.17 (m); (3) the drawing correction and/or other deficiencies (if necessary); and (4) the required statement of unintentional delay have been received. Accordingly, the Issue Fee payment is accepted as having been unintentionally delayed.

Telephone inquiries concerning this decision should be directed to the Patent Electronic Business Center (EBC) at 866-217-9197.

This application file is being directed to the Office of Data Management.

Office of Petitions

Doc Code: PET.AUTO Document Description: Petition automatically granted by EFS-Web	PTO/SB/64 U.S. Patent and Trademark Office Department of Commerce

Electronic Petition Request	PETITION FOR REVIVAL OF AN APPLICATION FOR PATENT ABANDONED UNINTENTIONALLY UNDER 37 CFR 1.137(b)
Application Number	11974580
Filing Date	15-Oct-2007
First Named Inventor	Prabir Dutta
Art Unit	1724
Examiner Name	KAJ OLSEN
Attorney Docket Number	100090.0023
Title	CARBON DIOXIDE SENSOR

The above-identified application became abandoned for failure to file a timely and proper reply to a notice or action by the United States Patent and Trademark Office. The date of abandonment is the day after the expiration date of the period set for reply in the office notice or action plus any extensions of time actually obtained.

APPLICANT HEREBY PETITIONS FOR REVIVAL OF THIS APPLICATION

NOTE: A grantable petition requires the following items:
(1) Petition fee;
(2) Reply and/or issue fee;
(3) Terminal disclaimer with disclaimer fee – required for all utility and plant applications filed before June 8, 1995; and for all design applications;
(4) Statement that the entire delay was unintentional.

Petition fee
The petition fee under 37CFR 1.17(m) is attached.

☐ Applicant claims SMALL ENTITY status. See 37 CFR 1.27.

☐ Applicant is no longer claiming SMALL ENTITY status. See 37 CFR 1.27(g)(2).

☒ Applicant(s) status remains as SMALL ENTITY.

☐ Applicant(s) status remains as other than SMALL ENTITY.

Issue Fee and Publication Fee :

Issue Fee and Publication Fee must accompany ePetition.

☒ Issue Fee Transmittal is attached

Drawing corrections and/ or other deficiencies.

- (●) Drawing corrections and/ or other deficiencies are not required
- ( ) I certify, in accordance with 37 CFR 1.4.(D)(4), that drawing corrections and/ or other deficiencies have previously been filed on
- ( ) Drawing corrections and/ or other deficiencies are attached.
- [x] STATEMENT: The entire delay in filing the required reply from the due date for the required reply until the filing of a grantable petition under 37 CFR 1.137(b) was unintentional.

THIS PORTION MUST BE COMPLETED BY THE SIGNATORY OR SIGNATORIES

I certify, in accordance with 37 CFR 1.4(d)(4) that I am:

- (●) An attorney or agent registered to practice before the Patent and Trademark Office who has been given power of attorney in this application.
- ( ) An attorney or agent registered to practice before the Patent and Trademark Office, acting in a representative capacity.
- ( ) A sole inventor
- ( ) A joint inventor; I certify that I am authorized to sign this submission on behalf of all of the inventors.
- ( ) A joint inventor; all of whom are signing this e-petition.
- ( ) The assignee of record of the entire interest that has properly made itself of record pursuant to 37 CFR 3.71.

Signature	/Daniel J. Schlue/
Name	Daniel J. Schlue
Registration Number	52194

UNITED STATES PATENT AND TRADEMARK OFFICE

Commissioner for Patents
United States Patent and Trademark Office
P.O. Box 1450
Alexandria, VA 22313-1450
www.uspto.gov

J. CHARLES DOUGHERTY
Wright, Lindsey & Jennings LLP
200 WEST CAPITOL AVE
SUITE 2300
LITTLE ROCK AR 72201

MAILED

AUG 26 2010

OFFICE OF PETITIONS

In re Application of
Jesse Jones et al.
Application No. 11/974,583
Filed: October 15, 2007
Attorney Docket No. 18326-58099-B

DECISION ON PETITION

This is a decision on the petition under the unintentional provisions of 37 CFR 1.137(b), filed January 15, 2010, to revive the above-identified application.

The petition is **GRANTED**.

This application became abandoned for failure to timely submit replacement drawings on or before December 28, 2009, as required by the Notice of Allowability, mailed September 25, 2009. Accordingly, the date of abandonment of this application is December 29, 2009.

The petition satisfies the requirements of 37 CFR 1.137(b) in that petitioner has supplied (1) the reply in the form of replacement drawings, (2) the petition fee of $810; and (3) a proper statement of unintentional delay.

Telephone inquiries concerning this decision should be directed to JoAnne Burke at 571-272-4584.

This application is being referred to the Office of Data Management for processing into a patent.

JoAnne Burke
Petitions Examiner
Office of Petitions

UNITED STATES PATENT AND TRADEMARK OFFICE

Commissioner for Patents
United States Patent and Trademark Office
P.O. Box 1450
Alexandria, VA 22313-1450
www.uspto.gov

SYNAGEVA BIOPHARMA CORP.
128 SPRING STREET
SUITE 520
LEXINGTON, MA 02421

MAILED
JUL 28 2011
OFFICE OF PETITIONS

In re Application of	:	
Ivarie et al.	:	
Application No. 11/974,657	:	DECISION ON PETITION
Filed: October 15, 2007	:	
Attorney Docket No. AVI-000CIPON3	:	

This is a decision on the petition filed June 17, 2011, which is being treated as a petition under 37 CFR 1.181 (no fee), requesting withdrawal of the holding of abandonment in the above-identified application.

The petition is **GRANTED**.

This application was held abandoned for failure to timely respond to the final Office action mailed October 15, 2010, which set a three (3) month shortened statutory period for reply. Accordingly, a reply was due on or before January 15, 2011 or April 15, 2001, with a three (3) month extension of time.

Petitioner asserts that a timely response was filed via the Electronic Filing System (EFS) which included a certificate of mailing or transmission date of April 8, 2011. The response included the following papers: A Request for Continued Examination (RCE) and a submission under 37 CFR 1.114, a three (3) month extension of time and a Supplemental Information Disclosure Statement (IDS). To support this assertion the petitioner has submitted a copy of the previously filed correspondence which bears a certificate of mailing /transmission dated April 8, 2011, accompanied by a copy of the Electronic Acknowledgment Receipt dated April 8, 2011, which would render the reply timely if received.

The file record does not include the originally submitted papers. Failure to receive correspondence which includes a certificate of mailing or certificate of transmission is addressed in 37 CFR 1.8, reproduced below:

> In the event that correspondence is considered timely filed by being mailed or transmitted in accordance with paragraph (a) of this section, but not received in the U.S. Patent and Trademark Office after a reasonable amount of time has elapsed from the time of mailing or transmitting of the correspondence, or after the application is held to be abandoned, or after the proceeding is dismissed, terminated, or decided with prejudice, the correspondence will be considered timely if the party who forwarded such correspondence:

(1) Informs the Office of the previous mailing or transmission of the correspondence promptly after becoming aware that the Office has no evidence of receipt of the correspondence;

(2) Supplies an additional copy of the previously mailed or transmitted correspondence and certificate; and

(3) Includes a statement which attests on a personal knowledge basis or to the satisfaction of the Director to the previous timely mailing or transmission. If the correspondence was sent by facsimile transmission, a copy of the sending unit's report confirming transmission may be used to support this statement.

The petition satisfies the above requirements of 37 CFR 1.8(c). Accordingly, the holding of abandonment for failure to timely file reply to the final Office action mailed October 15, 2010, is hereby withdrawn and the application restored to pending status.

The copy of the reply received with the petition will be accepted in place of the reply shown to have been submitted via EFS on April 8, 2011.

Telephone inquiries concerning this decision should be directed to the Alicia Kelley-Collier at (571) 272-6059.

This application is being referred to Technology Center AU 1646 for appropriate action by the Examiner in the normal course of business on the reply.

/Carl Friedman/
Carl Friedman
Petitions Examiner
Office of Petitions

UNITED STATES PATENT AND TRADEMARK OFFICE

Commissioner for Patents
United States Patent and Trademark Office
P.O. Box 1450
Alexandria, VA 22313-1450
www.uspto.gov

FENNEMORE CRAIG, P.C.
1700 LINCOLN STREET
SUITE 2900
DENVER, CO 80203

MAILED

JUL 01 2011

OFFICE OF PETITIONS

Applicant: Robert Pagliasotti
Appl. No.: 11/974,675
Filing Date: October 15, 2007
Title: BUILDING-INTEGRATED SYSTEM FOR CAPTURING AND HARVESTING THE ENERGY FROM ENVIRONMENT WIND
Attorney Docket No.: PAG US-1 (28574-002)
Pub. No.: US 2010/0257795 A1
Pub. Date: October 14, 2010

This is a decision on the request for a corrected patent application publication under 37 CFR 1.221(b), received on November 17, 2010, for the above-identified application.

The patent issued on March 22, 2011.

The request is DISMISSED as moot.

Since the application has been issued as a patent, the request is deemed moot.

Inquiries relating to this matter may be directed to Mark Polutta at (571) 272-7709.

Mark Polutta
Senior Legal Advisor
Office of Patent Legal Administration
Office of the Deputy Commissioner
for Patent Examination Policy

UNITED STATES PATENT AND TRADEMARK OFFICE

Commissioner for Patents
United States Patent and Trademark Office
P.O. Box 1450
Alexandria, VA 22313-1450
www.uspto.gov

MAILED

JAN 26 2012

OFFICE OF PETITIONS

ANDREW S. NAGLESTAD
130 W. UNION ST.
PASADENA, CA 91103

In re Application of
William Gross, et al.
Application No. 11/974,683
Filed: October 15, 2007
Attorney Docket No.: 100.023A

ON PETITION

This is a decision on the petition under 37 CFR 1.137(b) to revive the above-identified application, filed December 21, 2011.

The petition is **GRANTED**.

The application became abandoned for failure to timely pay the issue fee on or before October 26, 2011, as required by the Notice of Allowance and Fee(s) Due mailed July 26, 2011. A Notice of Abandonment was subsequently mailed on November 8, 2011. On December 21, 2011, the present petition was filed.

The petition satisfies the requirements of 37 CFR 1.137(b) in that petitioner has supplied (1) the reply in the form of the $1,740 issue fee; (2) the petition fee of $1,860; and (3) an adequate statement of unintentional delay.

The application is being referred to the Office of Data Management to be processed into a patent.

Telephone inquires related to this decision should be directed to the undersigned at (571) 272-3204. Telephone inquiries related to processing as a patent should be directed to (571) 272-4200.

/SDB/

Sherry D. Brinkley
Petitions Examiner
Office of Petitions

UNITED STATES PATENT AND TRADEMARK OFFICE

Commissioner for Patents
United States Patent and Trademark Office
P.O. Box 1450
Alexandria, VA 22313-1450
www.uspto.gov

FENWICK & WEST LLP
SILICON VALLEY CENTER
801 CALIFORNIA STREET
MOUNTAIN VIEW, CA 94041

MAILED
NOV 24 2010
OFFICE OF PETITIONS

In re Application of :
Guolin Li et al :
Application No. 11/974,744 : ON PETITION
Filed: October 15, 2007 :
Attorney Docket No. 25368-14084 :

This is in response to the petitions, filed June 7, 2010 which are being treated as petitions under 37 CFR 1.183 requesting waiver of the requirements of 37 CFR 1.64, and under 37 CFR 1.48(a) requesting correction of inventorship.

The petitions are **DISMISSED.**

An oath or declaration in compliance with 37 CFR 1.63 and 1.64 has not been presented. The declaration filed June 7, 2010 is incomplete. The box checked "Additional inventors are being named on two additional form(s) attached hereto" are missing. A new oath or declaration in compliance with 37 CFR 1.63 and 1.64 signed by Guolin Li; Reza Fathi; Zhen Yang; Yun Liao; Qiang Zhu; Angela Man Iu Lam; Anthony Sandrasagra; Kenneth Nawoschik; Jie Cao; Wu Rouqiu; C. Richard Wobbe; Yixin Liu is REQUIRED. See MPEP 409.03(a).

In view of the incomplete declaration filed June 7, 2010, the petitions are dismissed for failure to comply with 37 CFR 1.48(a)(3) as the declaration submitted fails to comply with 37 CFR 1.63 and 1.64.

As the instant petition is being treated as a petition under 37 CFR 1.183, the petition fee of $400 set forth in 37 CFR 1.17(f) is required. Petitioner has already paid $130 for consideration of the instant petition. Accordingly, an additional $270 is being charged to petitioner's Deposit Account No. 19-2555.

Telephone inquiries regarding this decision should be directed to the Irvin Dingle at (571) 272-3210.

David Bucci
Petitions Examiner
Office of Petitions

UNITED STATES PATENT AND TRADEMARK OFFICE

Commissioner for Patents
United States Patent and Trademark Office
P.O. Box 1450
Alexandria, VA 22313-1450
www.uspto.gov

FENWICK & WEST LLP
SILICON VALLEY CENTER
801 CALIFORNIA STREET
MOUNTAIN VIEW, CA 94041

MAILED
MAR 08 2011
OFFICE OF PETITIONS

In re Application of :
Guolin Li et al :
Application No. 11/974,744 : ON PETITION
Filed: October 15, 2007 :
Attorney Docket No. 25368-14084 :

This is in response to the request for reconsideration of petitions, filed January 7, 2011 and supplemented on January 24, 2011, which are being treated as petitions under 37 CFR 1.183 requesting waiver of the requirements of 37 CFR 1.64, and under 37 CFR 1.48(a) requesting correction of inventorship.

The petitions are **GRANTED.**

Petitioner has shown that the inability to again obtain the signature from the originally signing inventor Hyun-Joon Cho is, not withstanding the exercise of reasonable care and diligence, due to circumstances beyond his control. Accordingly, the declaration submitted January 7, 2011 will be accepted.

Additionally, it has been found that this non-provisional application, as filed, through error and without deceptive intent, improperly set forth the inventorship, and accordingly, this application has been corrected in compliance with 37 CFR 1.48(a). The inventorship of this application has been changed by adding Yixin Liu as an additional inventor.

A corrected filing receipt is enclosed.

Telephone inquiries regarding this decision should be directed to the Irvin Dingle at (571) 272-3210.

David Bucci
Petitions Examiner
Office of Petitions

Attachment: Corrected Filing Receipt

UNITED STATES PATENT AND TRADEMARK OFFICE

UNITED STATES DEPARTMENT OF COMMERCE
United States Patent and Trademark Office
Address: COMMISSIONER FOR PATENTS
P.O. Box 1450
Alexandria, Virginia 22313-1450
www.uspto.gov

APPLICATION NUMBER	FILING or 371(c) DATE	GRP ART UNIT	FIL FEE REC'D	ATTY.DOCKET.NO	TOT CLAIMS	IND CLAIMS
11/974,744	10/15/2007	1626	1010	25368-14084	19	1

CONFIRMATION NO. 7012

CORRECTED FILING RECEIPT

758
FENWICK & WEST LLP
SILICON VALLEY CENTER
801 CALIFORNIA STREET
MOUNTAIN VIEW, CA 94041

OC000000046383752

Date Mailed: 03/07/2011

Receipt is acknowledged of this non-provisional patent application. The application will be taken up for examination in due course. Applicant will be notified as to the results of the examination. Any correspondence concerning the application must include the following identification information: the U.S. APPLICATION NUMBER, FILING DATE, NAME OF APPLICANT, and TITLE OF INVENTION. Fees transmitted by check or draft are subject to collection. Please verify the accuracy of the data presented on this receipt. **If an error is noted on this Filing Receipt, please submit a written request for a Filing Receipt Correction. Please provide a copy of this Filing Receipt with the changes noted thereon. If you received a "Notice to File Missing Parts" for this application, please submit any corrections to this Filing Receipt with your reply to the Notice. When the USPTO processes the reply to the Notice, the USPTO will generate another Filing Receipt incorporating the requested corrections**

Applicant(s)

Guolin Li, Montvale, NJ;
Reza Fathi, HoHoKus, NJ;
Zhen Yang, Ridgewood, NJ;
Yun Liao, Glenrock, NJ;
Qiang Zhu, Edson, NJ;
Angela Man Iu Lam, Fort Lee, NJ;
Anthony Sandrasagra, Princeton, NJ;
Kenneth Nawoschik, Spring Valley, NY;
Hyun-Joon Cho, Spring Valley, NY;
Jie Cao, White Plains, NY;
Wu Rouqiu, Garnerville, NY;
C. Richard Wobbe, Lexington, MA;
Yixin Liu, Rancho Cucamonga, CA;

Power of Attorney: The patent practitioners associated with Customer Number 00758

Domestic Priority data as claimed by applicant

This appln claims benefit of 60/851,643 10/13/2006
and claims benefit of 60/925,528 04/20/2007
and claims benefit of 60/933,565 06/06/2007

Foreign Applications (You may be eligible to benefit from the **Patent Prosecution Highway** program at the USPTO. Please see http://www.uspto.gov for more information.)

If Required, Foreign Filing License Granted: 01/14/2008

The country code and number of your priority application, to be used for filing abroad under the Paris Convention, is **US 11/974,744**

Projected Publication Date: Not Applicable

Non-Publication Request: No

Early Publication Request: No
**** SMALL ENTITY ****
Title

4-ETHYNYL PYRAZOLE DERIVATIVE COMPOUNDS AND METHODS FOR TREATMENT OF HCV

Preliminary Class

424

PROTECTING YOUR INVENTION OUTSIDE THE UNITED STATES

Since the rights granted by a U.S. patent extend only throughout the territory of the United States and have no effect in a foreign country, an inventor who wishes patent protection in another country must apply for a patent in a specific country or in regional patent offices. Applicants may wish to consider the filing of an international application under the Patent Cooperation Treaty (PCT). An international (PCT) application generally has the same effect as a regular national patent application in each PCT-member country. The PCT process **simplifies** the filing of patent applications on the same invention in member countries, but **does not result** in a grant of "an international patent" and does not eliminate the need of applicants to file additional documents and fees in countries where patent protection is desired.

Almost every country has its own patent law, and a person desiring a patent in a particular country must make an application for patent in that country in accordance with its particular laws. Since the laws of many countries differ in various respects from the patent law of the United States, applicants are advised to seek guidance from specific foreign countries to ensure that patent rights are not lost prematurely.

Applicants also are advised that in the case of inventions made in the United States, the Director of the USPTO must issue a license before applicants can apply for a patent in a foreign country. The filing of a U.S. patent application serves as a request for a foreign filing license. The application's filing receipt contains further information and guidance as to the status of applicant's license for foreign filing.

Applicants may wish to consult the USPTO booklet, "General Information Concerning Patents" (specifically, the section entitled "Treaties and Foreign Patents") for more information on timeframes and deadlines for filing foreign patent applications. The guide is available either by contacting the USPTO Contact Center at 800-786-9199, or it can be viewed on the USPTO website at http://www.uspto.gov/web/offices/pac/doc/general/index.html.

For information on preventing theft of your intellectual property (patents, trademarks and copyrights), you may wish to consult the U.S. Government website, http://www.stopfakes.gov. Part of a Department of Commerce initiative, this website includes self-help "toolkits" giving innovators guidance on how to protect intellectual property in specific countries such as China, Korea and Mexico. For questions regarding patent enforcement issues, applicants may call the U.S. Government hotline at 1-866-999-HALT (1-866-999-4158).

LICENSE FOR FOREIGN FILING UNDER

Title 35, United States Code, Section 184

Title 37, Code of Federal Regulations, 5.11 & 5.15

GRANTED

The applicant has been granted a license under 35 U.S.C. 184, if the phrase "IF REQUIRED, FOREIGN FILING LICENSE GRANTED" followed by a date appears on this form. Such licenses are issued in all applications where the conditions for issuance of a license have been met, regardless of whether or not a license may be required as set forth in 37 CFR 5.15. The scope and limitations of this license are set forth in 37 CFR 5.15(a) unless an earlier license has been issued under 37 CFR 5.15(b). The license is subject to revocation upon written notification. The date indicated is the effective date of the license, unless an earlier license of similar scope has been granted under 37 CFR 5.13 or 5.14.

This license is to be retained by the licensee and may be used at any time on or after the effective date thereof unless it is revoked. This license is automatically transferred to any related applications(s) filed under 37 CFR 1..53(d). This license is not retroactive.

The grant of a license does not in any way lessen the responsibility of a licensee for the security of the subject matter as imposed by any Government contract or the provisions of existing laws relating to espionage and the national security or the export of technical data. Licensees should apprise themselves of current regulations especially with respect to certain countries, of other agencies, particularly the Office of Defense Trade Controls, Department of State (with respect to Arms, Munitions and Implements of War (22 CFR 121-128)); the Bureau of Industry and Security, Department of Commerce (15 CFR parts 730-774); the Office of Foreign AssetsControl, Department of Treasury (31 CFR Parts 500+) and the Department of Energy.

NOT GRANTED

No license under 35 U.S.C. 184 has been granted at this time, if the phrase "IF REQUIRED, FOREIGN FILING LICENSE GRANTED" DOES NOT appear on this form. Applicant may still petition for a license under 37 CFR 5.12, if a license is desired before the expiration of 6 months from the filing date of the application. If 6 months has lapsed from the filing date of this application and the licensee has not received any indication of a secrecy order under 35 U.S.C. 181, the licensee may foreign file the application pursuant to 37 CFR 5.15(b).

SPE RESPONSE FOR CERTIFICATE OF CORRECTION

DATE : August 8, 2011

TO SPE OF : ART UNIT 1622

SUBJECT : Request for Certificate of Correction for Appl. No.: 11/974744 Patent No.: 7923004

CofC mailroom date: 7-26-11

Please respond to this request for a certificate of correction within 7 days.

FOR IFW FILES:

Please review the requested changes/corrections as shown in the **COCIN** document(s) in the IFW application image. No new matter should be introduced, nor should the scope or meaning of the claims be changed.

Please complete the response (see below) and forward the completed response to scanning using document code **COCX**.

FOR PAPER FILES:

Please review the requested changes/corrections as shown in the attached certificate of correction. Please complete this form (see below) and forward it with the file to:

Certificates of Correction Branch (CofC)
Randolph Square – 9D10-A
Palm Location 7580

Note: _____

_____

Magdalene Talley
Certificates of Correction Branch
571-272-0423 _____

Thank You For Your Assistance

The request for issuing the above-identified correction(s) is hereby:
Note your decision on the appropriate box.

X	**Approved**	**All** changes apply.
☐	**Approved in Part**	Specify below which changes **do not** apply.
☐	**Denied**	State the reasons for denial below.

Comments: _____

/Andrew D Kosar/ _____ 1622 _____
SPE **Art Unit**

SPE RESPONSE FOR CERTIFICATE OF CORRECTION

DATE : August 8, 2011

TO SPE OF : ART UNIT 1626

SUBJECT : Request for Certificate of Correction for Appl. No.: ~~11/5974744~~ 11/974,744 Patent No.: 7923004

CofC mailroom date: 7-26-11

Please respond to this request for a certificate of correction within 7 days.

FOR IFW FILES:

Please review the requested changes/corrections as shown in the **COCIN** document(s) in the IFW application image. No new matter should be introduced, nor should the scope or meaning of the claims be changed.

Please complete the response (see below) and forward the completed response to scanning using document code **COCX**.

FOR PAPER FILES:

Please review the requested changes/corrections as shown in the attached certificate of correction. Please complete this form (see below) and forward it with the file to:

Certificates of Correction Branch (CofC)
Randolph Square – 9D10-A
Palm Location 7580

Note: _____

Magdalene Talley
Certificates of Correction Branch
571-272-0423

Thank You For Your Assistance

The request for issuing the above-identified correction(s) is hereby:
Note your decision on the appropriate box.

- ☒ **Approved** — **All** changes apply.
- ☐ **Approved in Part** — Specify below which changes **do not** apply.
- ☐ **Denied** — State the reasons for denial below.

Comments:

Kamal Saeed
KAMAL A. SAEED, PH.D.
PRIMARY EXAMINER

Acting on behal of Joseph McKane.

SPE **Art Unit**

UNITED STATES PATENT AND TRADEMARK OFFICE

Commissioner for Patents
United States Patent and Trademark Office
P.O. Box 1450
Alexandria, VA 22313-1450
www.uspto.gov

Scott A. Whitaker, Ph.D., J.D.
Senior Intellecual Property Counsel
BioNumerik Pharmaceuticals, Inc.
8122 Datapoint Drive, Suite 1250
San Antonio TX 78229

MAILED

JAN 3 1 2011

OFFICE OF PETITIONS

In re Patent No. 7,687,496	:	
Issue Date: March 30, 2010	:	
Application No. 11/974,754	:	NOTICE
Filed: October 16, 2007	:	
Attorney Docket No. X-0259	:	

This is a notice regarding your request for acceptance of a fee deficiency submission under 37 CFR 1.28 filed December 1, 2010. On September 1, 1998, the Court of Appeals for the Federal Circuit held that 37 CFR 1.28(c) is the sole provision governing the time for correction of the erroneous payment of the issue fee as a small entity. **See DH Technology v. Synergystex International, Inc. 154 F.3d 1333, 47 USPQ2d 1865 (Fed. Cir. Sept. 1, 1998).**

The Office no longer investigates or rejects original or reissue applications under 37 CFR 1.56. **1098 Off. Gaz. Pat. Office 502 (January 3, 1989)**. Therefore, nothing in this Notice is intended to imply that an investigation was done.

Your fee deficiency submission under 37 CFR 1.28 is hereby accepted. The petition is **GRANTED**.

This application is no longer entitled to small entity status. Accordingly, all future fees paid in this application must be paid at the large entity rate.

This file is being forwarded to Files Repository.

Telephone inquiries related to this decision should be directed to the Kimberly Inabinet at (571) 272-4618.

/Carl Friedman/
Carl Friedman
Petitions Examiner
Office of Petitions

UNITED STATES PATENT AND TRADEMARK OFFICE

Commissioner for Patents
United States Patent and Trademark Office
P.O. Box 1450
Alexandria, VA 22313-1450
www.uspto.gov

Scott A. Whitaker, Ph.D., J.D.
Senior Intellecual Property Counsel
BioNumerik Pharmaceuticals, Inc.
8122 Datapoint Drive, Suite 1250
San Antonio TX 78229

MAILED
JAN 24 2011
OFFICE OF PETITIONS

In re Patent No. 7,687,497	:	
Issue Date: March 30, 2010	:	
Application No. 11/974,756	:	NOTICE
Filed: October 16, 2007	:	
Attorney Docket No. X-0260	:	

This is a notice regarding your request for acceptance of a fee deficiency submission under 37 CFR 1.28 filed December 1, 2010. On September 1, 1998, the Court of Appeals for the Federal Circuit held that 37 CFR 1.28(c) is the sole provision governing the time for correction of the erroneous payment of the issue fee as a small entity. **See DH Technology v. Synergystex International, Inc. 154 F.3d 1333, 47 USPQ2d 1865 (Fed. Cir. Sept. 1, 1998).**

The Office no longer investigates or rejects original or reissue applications under 37 CFR 1.56. **1098 Off. Gaz. Pat. Office 502 (January 3, 1989)**. Therefore, nothing in this Notice is intended to imply that an investigation was done.

Your fee deficiency submission under 37 CFR 1.28 is hereby accepted. The petition is **GRANTED**.

This application is no longer entitled to small entity status. Accordingly, all future fees paid in this application must be paid at the large entity rate.

This file is being forwarded to Files Repository.

Telephone inquiries related to this decision should be directed to the Kimberly Inabinet at (571) 272-4618.

/Carl Friedman/
Carl Friedman
Petitions Examiner
Office of Petitions

UNITED STATES PATENT AND TRADEMARK OFFICE

Commissioner for Patents
United States Patent and Trademark Office
P.O. Box 1450
Alexandria, VA 22313-1450
www.uspto.gov

October 21, 2011

PVF -- ORACLE AMERICA, INC.
C/O PARK, VAUGHAN, FLEMING & DOWLER LLP
2820 FIFTH STREET
DAVIS CA 95618-7759

In re Application of	:	
Gross, Kenny C. et,al	:	**DECISION ON PETITION**
Application No. 11/974,788	:	
Filed: 10/16/2007	:	***ACCEPTANCE OF COLOR***
Attorney Docket No. SUN08-0037	:	***DRAWINGS***

This is a decision on the Petition to Accept Color Drawings under 37 C.F.R 1.84 (a) (2), received in the United States Patent and Trademark Office (USPTO) October 16, 2007

The petition is **GRANTED**.

A grantable petition under 37 C.F.R. 1.84(a) (2) must be accompanied by the following.

1. The fee set forth under 37 C.F.R. 1.17(h),
2. Three (3) sets of the color drawings in question, or (1) set if filed via EFS, and
3. The specification contains appropriate language referring to the color drawings as the first paragraph in that portion of the specification relating to the brief description of the drawings.

The petition was accompanied by all of the required fees and drawings. The specification contains the appropriate language. Therefore, the petition is GRANTED.

Telephone inquires relating to this decision may be directed to the undersigned in the Office of Data Management at 571-272-4200.

/Diane Terry/
Quality Control Specialist
Office of Data Management
Publications Branch

UNITED STATES PATENT AND TRADEMARK OFFICE

Commissioner for Patents
United States Patent and Trademark Office
P.O. Box 1450
Alexandria, VA 22313-1450
www.uspto.gov

Patent No : 7,973,760 B2
Ser. No. : 11/974,803
Inventor(s) : He-Kang Zhou, et. al.
Issued : July 5, 2011

Re: Request for Certificate of Correction

Consideration has been given your request for the issuance of a certificate of correction for the above-identified patent under the provisions of Rule(s) 1.322.

Assignees' names and addresses (assignment data) printed in a patent, are based *solely* on information supplied in the appropriate space for identifying the assignment data, i.e., item 3 of the Issue Fee Transmittal Form PTOL-85B. Granting of a request under 37 CFR 3.81(b) is required to correct applicant's error providing ***incorrect or erroneous*** assignment data, *before* issuance of a Certificate of Correction, under 37 CFR 1.323 *(see Manual of Patent Examining Procedures (M.P.E.P) Chp.1400, sect. 1481).* This procedure is required *at any time after the issue fee is paid,* including after issuance of the patent.

In view of the foregoing, your request is hereby denied.

A request to correct the Assignee under 37 CFR 3.81(b) should include:

A. **the processing fee set forth in 37 CFR 1.17(i) (currently $130);**
B. a statement that the failure to include the correct assignee name on the PTOL-85B was inadvertent; and
C. a copy of the Notice of Recordation of Assignment Document, reflecting the reel and frame number where the assignment(s) is recorded and/or reflecting proof of *the date* the assignment was submitted for recordation.

In the Request, Applicant(s) may request that the file be forwarded to Certificates of Correction Branch, for issuance of a Certificate of Correction, if the Request is granted.

Any request under 37 CFR 3.81(b) should be directed to the following address or facsimile number:

By mail: Mail Stop PETITIONS
Commissioner for Patents
Post Office Box 1450
Alexandria, VA 22313-1450

By hand: Customer Service Window
Mail Stop Petitions
Randolph Building
401 Dulany Street
Alexandria, VA 22314

By fax: (703) 872-9306
ATTN: Office of Petitions

If a fee (currently $100) was previously submitted for consideration of a Request for Certificate of Correction, under CFR 1.323, to correct assignment data, , no additional fee is required.

Eva James
For Mary Diggs
Decisions & Certificates
of Correction Branch
(571) 272-3422 or 703- 756 -1580

Altis Law Group, Inc.
Attn: Steven M. Reiss
288 S. Mayo Ave.
City of Industry, CA 91789

ej

UNITED STATES PATENT AND TRADEMARK OFFICE

Commissioner for Patents
United States Patent and Trademark Office
P.O. Box 1450
Alexandria, VA 22313-1450
www.uspto.gov

ERICKSON, KERNELL
DERUSSEAU & KLEYPAS, LLC
8900 STATE LINE ROAD
SUITE 500
LEAWOOD KS 66206

MAILED

FEB 22 2012

OFFICE OF PETITIONS

In re Application of :
Greenthal, et al. :
Application No. 11/974,812 : DECISION
Filed/Deposited: 16 October, 2007 :
Attorney Docket No. 798.001 :

This is a decision on the petition filed on 2 January, 2012, pursuant to 37 C.F.R. §1.137(b) for revival of an application abandoned due to unintentional delay.

NOTE:

The Patent and Trademark Office relies in this matter on the duty of candor and good faith of Petitioner/Counsel Kent R. Erickson (Reg. No. 36,793) when accepting Petitioners' representation that the delay in filing the response was unintentional.[1]

The petition pursuant to 37 C.F.R. §1.137(b) is **GRANTED**.

As to the Allegations
of Unintentional Delay

The requirements of a grantable petition pursuant to 37 C.F.R. §1.137(b) are the petition and fee therefor, a reply, a proper statement and/or showing of unintentional delay under the regulation, and, where applicable, a terminal disclaimer and fee

Petitioners' attentions always are directed to the guidance in the Commentary at MPEP §711.03(c)(II).

[1] *See:* Changes to Patent Practice and Procedure, 62 Fed. Reg. at 53160 and 53178, 1203 Off. Gaz. Pat. Office at 88 and 103 (responses to comments 64 and 109)(applicant obligated under 37 C.F.R. §10.18 to inquire into the underlying facts and circumstances when providing the statement required by 37 C.F.R. §1.137(b) to the Patent and Trademark Office).

BACKGROUND

The record reflects as follows:

Applicants, through former Counsel, failed to reply timely and properly to the final Office action mailed on 22 April, 2011, with reply due absent an extension of time on or 22 July, 2011.

The application went abandoned by operation of law after midnight 22 July, 2011.

The Office mailed the Notice of Abandonment on 7 November, 2011.

On 2 January, 2012, Petitioner filed, *inter alia*, a petition pursuant to 37 C.F.R. §1.137(b), with fee, with a statement of unintentional delay and a reply in the form of a request for continued examination (RCE) and fee and a submission under the provisions of 37 C.F.R. §1.114 in the form of an amendment.

As indicated above, Petitioner was not in control of the application at the time of abandonment and Petitioner is appreciated to have made inquiry into the facts of the abandonment. Thus, the Patent and Trademark Office is relying in this matter on the duty of candor and good faith of Petitioner/Counsel Kent R. Erickson (Reg. No. 36,793) when accepting Petitioners' representation that the delay in filing the response was unintentional.[2]

Petitioners' attentions always are directed to the guidance in the Commentary at MPEP §711.03(c) as to the showing regarding unintentional delay and a petition pursuant to 37 C.F.R. §1.137(b).

The availability of applications and application papers online to applicants/practitioners who diligently associate their Customer Number with the respective application(s) now provides an applicant/practitioner on-demand information as to events/transactions in an application.

Out of an abundance of caution, Petitioners always are reminded that those registered to practice and all others who make representations before the Office **must** inquire into the underlying facts of representations made to the Office and support averments with the appropriate documentation–since all owe to the Office the continuing duty to disclose.[3]

---

[2] *See:* Changes to Patent Practice and Procedure, 62 Fed. Reg. at 53160 and 53178, 1203 Off. Gaz. Pat. Office at 88 and 103 (responses to comments 64 and 109)(applicant obligated under 37 C.F.R. §10.18 to inquire into the underlying facts and circumstances when providing the statement required by 37 C.F.R. §1.137(b) to the Patent and Trademark Office).

[3] See supplement of 17 June, 1999. The Patent and Trademark Office is relying on petitioner's duty of candor and good faith and accepting a statement made by Petitioner. See Changes to Patent Practice and Procedure, 62 Fed. Reg. at 53160 and 53178, 1203 Off. Gaz. Pat. Office at 88 and 103 (responses to comments 64 and 109)(applicant obligated under 37 C.F.R. §11.18, formerly §10.18, to inquire into the underlying facts and circumstances when providing statements to the Patent and Trademark Office).

STATUTES, REGULATIONS

Congress has authorized the Commissioner to "revive an application if the delay is shown to the satisfaction of the Commissioner to have been "unavoidable." 35 U.S.C. §133 (1994). And the regulations at 37 C.F.R. §1.137(a) and (b) set forth the requirements for a Petitioner to revive a previously unavoidably or unintentionally, respectively, abandoned application.[4],[5]

Moreover, the Office has set forth in the Commentary at MPEP §711.03(c)(I) the showing and timeliness requirements for a proper showing for relief under 37 C.F.R. §1.181 in these matters.

Decisions on reviving abandoned applications on the basis of "unavoidable" delay have adopted the reasonably prudent person standard in determining if the delay was unavoidable:

> The word 'unavoidable' . . . is applicable to ordinary human affairs, and requires no more or greater care or diligence than is generally used and observed by prudent and careful men in relation to their most important business. It permits them in the exercise of this care to rely upon the ordinary and trustworthy agencies of mail and telegraph, worthy and reliable employees, and such other means and instrumentalities as are usually employed in such important business. If unexpectedly, or through the unforeseen fault or imperfection of these agencies and instrumentalities, there occurs a failure, it may properly be said to be unavoidable, all other conditions of promptness in its rectification being present.[6]

---

[4] See: Changes to Patent Practice and Procedure; Final Rule Notice, 62 Fed. Reg. at 53158-59 (October 10, 1997), 1203 Off. Gaz. Pat. Office at 86-87 (October 21, 1997).

[5] The language of 35 U.S.C. §133 and 37 C.F.R. §1.137(a) is clear, unambiguous, and without qualification: the delay in tendering the reply to the outstanding Office action, as well as filing the first petition seeking revival, must have been unavoidable for the reply now to be accepted on petition. (Therefore, by example, an unavoidable delay in the payment of the Filing Fee might occur if a reply is shipped by the US Postal Service, but due to catastrophic accident, the delivery is not made.) Delays in responding properly raise the question whether delays are unavoidable. Where there is a question whether the delay was unavoidable, Petitioners must meet the burden of establishing that the delay was unavoidable within the meaning of 35 U.S.C. §133 and 37 C.F.R. §1.137(a) And the Petitioner must be diligent in attending to the matter. Failure to do so does not constitute the care required under Pratt, and so cannot satisfy the test for diligence and due care. (By contrast, unintentional delays are those that do not satisfy the very strict statutory and regulatory requirements of unavoidable delay, and also, by definition, are not intentional.))

[6] In re Mattullath, 38 App. D.C. 497, 514-15 (1912)(quoting Ex parte Pratt, 1887 Dec. Comm'r Pat. 31, 32-33 (1887)); see also Winkler v. Ladd, 221 F. Supp. 550, 552, 138 USPQ 666, 167-68 (D.D.C. 1963), aff'd, 143 USPQ 172 (D.C. Cir. 1963); Ex parte Henrich, 1913 Dec. Comm'r Pat. 139, 141 (1913). In addition, decisions on revival are made on a "case-by-case basis, taking all the facts and circumstances into account." Smith v. Mossinghoff, 671 F.2d 533, 538, 213 USPQ 977, 982 (D.C. Cir. 1982). Finally, a petition cannot be granted where a petitioner has failed to meet his or her burden of establishing that the delay was "unavoidable." Haines v. Quigg, 673 F. Supp. 314, 316-17, 5 USPQ2d 1130, 1131-32 (N.D. Ind. 1987).

As to Allegations of
Unintentional Delay

As indicated above, the requirements of a grantable petition pursuant to 37 C.F.R. §1.137(b) are the petition and fee therefor, a proper reply, a proper statement and/or showing of unintentional delay under the regulation, and, where applicable, a terminal disclaimer and fee.

It appears that the requirements under the rule have been satisfied.

CONCLUSION

Accordingly, the petition pursuant to 37 C.F.R. §1.137(b) is **granted**.

The instant application is released to the Technology Center/AU 3784 for further processing in due course.

Petitioner may find it beneficial to view Private PAIR within a fortnight of the instant decision to ensure that the revival has been acknowledged by the TC/AU in response to this decision. It is noted that all inquiries with regard to status need be directed to the TC/AU where that change of status must be effected—that does not occur in the Office of Petitions.

Telephone inquiries regarding this decision may be directed to the undersigned at (571) 272-3214—it is noted, however , that all practice before the Office is in writing (see: 37 C.F.R. §1.2[7]) and the proper authority for action on any matter in this regard are the statutes (35 U.S.C.), regulations (37 C.F.R.) and the commentary on policy (MPEP). Therefore, no telephone discussion may be controlling or considered authority for Petitioner's action(s).

/John J. Gillon, Jr./
John J. Gillon, Jr.
Senior Attorney
Office of Petitions

[7] The regulations at 37 C.F.R. §1.2 provide:
§1.2 Business to be transacted in writing.
All business with the Patent and Trademark Office should be transacted in writing. The personal attdance of applicants or their attorneys or agents at the Patent and Trademark Office is unnecessary. The action of the Patent and Trademark Office will be based exclusively on the written record in the Office. No attention will be paid to any alleged oral promise, stipulation, or understanding in relation to which there is disagreement or doubt.

UNITED STATES PATENT AND TRADEMARK OFFICE

Commissioner for Patents
United States Patent and Trademark Office
P.O. Box 1450
Alexandria, VA 22313-1450
www.uspto.gov

COOLEY LLP
ATTN: PATENT GROUP
SUITE 1100
777 - 6TH STREET, NW
WASHINGTON, DC 20001

MAILED
SEP 06 2011
OFFICE OF PETITIONS

In re Application of Mehta et al. Application No. 11/974,861 Filed: October 16, 2007 Attorney Docket No. 79900-810794	: : : : :	DECISION ON PETITION TO WITHDRAW FROM RECORD

This is a decision on the Request to Withdraw as attorney or agent of record under 37 C.F.R. § 1.36(b), filed July 5, 2011.

The request is **DISMISSED** as involving a moot issue.

A review of the file record indicates that the power of attorney to the attorneys/agent associated with Customer Number 23419 was revoked by the assignee of the patent application on August 11, 2011. Accordingly, the request to withdraw under 37 C.F.R. § 1.36(b) is moot.

All future communications from the Office will be directed to the below-listed address until otherwise properly notified.

Telephone inquires concerning this decision should be directed to the undersigned at 571-272-3206. All other inquires concerning either the examination or status of the application should be directed to the Technology Center.

/Liana Walsh/
Liana Walsh
Petitions Examiner
Office of Petitions

cc: KILPATRICK TOWNSEND & STOCKTON LLP/VISA
TWO EMBARCADERO CENTER, 8TH FLOOR
SAN FRANCISCO CA 94111

UNITED STATES PATENT AND TRADEMARK OFFICE

UNITED STATES DEPARTMENT OF COMMERCE
United States Patent and Trademark Office
Address: COMMISSIONER FOR PATENTS
P.O. Box 1450
Alexandria, Virginia 22313-1450
www.uspto.gov

APPLICATION NO.	FILING DATE	FIRST NAMED INVENTOR	ATTORNEY DOCKET NO.	CONFIRMATION NO.
11/974,864	10/16/2007	Phuong V. Luu	12376C1 (GP-01-24-1)	7203

31743 7590 08/19/2010
Georgia-Pacific LLC
133 Peachtree Street NE - GA030-41
ATLANTA, GA 30303

EXAMINER
HUG, ERIC J

ART UNIT	PAPER NUMBER
1791	

MAIL DATE	DELIVERY MODE
08/19/2010	PAPER

Please find below and/or attached an Office communication concerning this application or proceeding.

The time period for reply, if any, is set in the attached communication.

UNITED STATES PATENT AND TRADEMARK OFFICE

Commissioner for Patents
United States Patent and Trademark Office
P.O. Box 1450
Alexandria, VA 22313-1450
www.uspto.gov

August 19, 2010

Georgia-Pacific LLC
133 Peachtree Street NE - GA030-41
ATLANTA GA 30303

In re Application of	:	
Phuong V. Luu, et al	:	**DECISION ON PETITION**
Application No. 11974864	:	
Filed: 10/17/2007	:	
Attorney Docket No. **12376C1 (GP-01-24-1)**	:	

This is a decision on the Petition to Accept Color Drawings under 37 C.F.R 1.84 (a) (2), received in the United States Patent and Trademark Office (USPTO) October 16, 2007.

The petition is **DISMISSED.**

A grantable petition under 37 C.F.R. 1.84(a) (2) must be accompanied by the following.

1. The fee set forth under 37 C.F.R. 1.17(h),
2. Three (3) sets of the color drawings in question, (One (1) set for EFW filings, and
3. The specification containing the following language as the first paragraph in that portion of the specification relating to the brief description of the drawings

"The file of this patent contains at least one drawing executed in color. Copies of this patent with color drawing(s) will be provided by the Patent and Trademark Office upon request and payment of the necessary fee."

The petition did not meet the following requirement(s). 1 ☐ 2 ☑ 3 ☐

A renewed petition filed under 37 C.F.R. 1.84 (a) (2) must be filed within TWO (2) MONTHS of this decision. If a renewed petition is not filed within the TWO (2) Months of this decision the drawings will be printed in black and white.

Telephone inquires relating to this decision may be directed to the undersigned in the Office of Data Management at 571-272-4200.

/Kimberly Terrell/
Manager
Office of Data Management
Publications Branch

UNITED STATES PATENT AND TRADEMARK OFFICE

UNITED STATES DEPARTMENT OF COMMERCE
United States Patent and Trademark Office
Address: COMMISSIONER FOR PATENTS
P.O. Box 1450
Alexandria, Virginia 22313-1450
www.uspto.gov

APPLICATION NO.	FILING DATE	FIRST NAMED INVENTOR	ATTORNEY DOCKET NO.	CONFIRMATION NO.
11/974,864	10/16/2007	Phuong V. Luu	12376C1 (GP-01-24-1)	7203

7590 10/01/2010
Georgia-Pacific LLC
133 Peachtree Street NE - GA030-41
ATLANTA, GA 30303

EXAMINER
HUG, ERIC J

ART UNIT	PAPER NUMBER
1791	

MAIL DATE	DELIVERY MODE
10/01/2010	PAPER

ACKNOWLEDGEMENT OF REQUEST

Notice of Allowance/Allowability Mailed

The request to print a color drawing reference as the first paragraph in the portion of the specification containing a brief description of the drawings as required by 37 CFR 1.84 and MPEP § 608.02 has been received by the United States Patent and Trademark Office and will be entered into the specification.

571-272-4200 or 1-888-786-0101
Application Assistance Unit
Office of Data Management

FORM PTOM327-5 (Rev. 02/08)

UNITED STATES PATENT AND TRADEMARK OFFICE

Commissioner for Patents
United States Patent and Trademark Office
P.O. Box 1450
Alexandria, VA 22313-1450
www.uspto.gov

September 30, 2010

Georgia-Pacific LLC
133 Peachtree Street NE - GA030-41
ATLANTA GA 30303

In re Application of	:	
Phuong V. Luu, et al	:	**DECISION ON PETITION**
Application No. 11974864	:	
Filed: 10/17/2007	:	***ACCEPTANCE OF***
Attorney Docket No. **12376C1 (GP-01-24-1)**	:	***COLOR DRAWINGS***

This is a decision on the Renewed Petition to Accept Color Drawings under 37 C.F.R 1.84 (a) (2), received in the United States Patent and Trademark Office (USPTO) September 14, 2010.

The petition is **GRANTED.**

A grantable petition under 37 C.F.R. 1.84(a) (2) must be accompanied by the following.

1. The fee set forth under 37 C.F.R. 1.17(h),
2. Three (3) sets of the color drawings in question, (One (1) set for EFW filings, and
3. The specification containing the following language as the first paragraph in that portion of the specification relating to the brief description of the drawings

"The file of this patent contains at least one drawing executed in color. Copies of this patent with color drawing(s) will be provided by the Patent and Trademark Office upon request and payment of the necessary fee."

Upon review of the application after receipt of the request for reconsideration of the previous decision, it was found that the application does contain three sets of color drawings. Therefore all requirements to grant the petition are met.

Telephone inquires relating to this decision may be directed to the undersigned in the Office of Data Management at 571-272-4200.

/Kimberly Terrell/
Manager
Office of Data Management
Publications Branch

UNITED STATES PATENT AND TRADEMARK OFFICE

UNITED STATES DEPARTMENT OF COMMERCE
United States Patent and Trademark Office
Address: COMMISSIONER FOR PATENTS
P.O. Box 1450
Alexandria, Virginia 22313-1450
www.uspto.gov

DRINKER BIDDLE & REATH LLP
ATTN: PATENT DOCKET DEPT.
191 N. WACKER DRIVE, SUITE 3700
CHICAGO, IL 60606

Mail Date: 08/03/2010

Applicant	: Jung-pa Seo	: DECISION ON REQUEST FOR
Patent Number	: 7667897	: RECALCULATION of PATENT
Issue Date	: 02/23/2010	: TERM ADJUSTMENT IN VIEW
Application No	: 11/974,874	: OF WYETH AND NOTICE OF INTENT TO
Filed	: 10/16/2007	: ISSUE CERTIFICATE OF CORRECTION
		:

The Request for Recalculation is **GRANTED** to the extent indicated.

The patent term adjustment has been determined to be **0** days. The USPTO will *sua sponte* issue a certificate of correction reflecting the amount of PTA days determined by the recalculation.

Prior to the issuance of the certificate of correction, the USPTO will afford patentee an opportunity to be heard and request reconsideration. Accordingly, patentee has **one month or thirty (30) days**, whichever is longer, to file a request for reconsideration of this patent term adjustment calculation. See 35 U.S.C. 154(b)(3)(B)(ii) and 37 CFR 1.322(a)(4). No extensions of time will be granted under 37 CFR 1.136.

Patentee should use document code PET.OP if electronically filing a request for reconsideration of this patent term adjustment calculation. The patentee must also include the information required by 37 CFR 1.705(b)(2) and the fee required by 37 CFR 1.18(e). If patentee does not file a timely request for reconsideration of this patent term adjustment calculation including the information required by 37 CFR 1.705(b)(2) and the fee required by 37 CFR 1.18(e), the USPTO will issue a certificate of correction reflecting the PTA determination noted above.

Patentee should be aware that in order to preserve the right to review in the United States District Court for the District of Columbia of the USPTO patent term adjustment determination, patentee must ensure that he or she also take the steps required under 35 U.S.C. 154(b)(4)(A) in a timely manner. Nothing in the request for recalculation should be construed as providing an alternative time frame for commencing a civil action under 35 U.S.C. 154(b)(4)(A).

Any questions concerning this decision should be directed to the Office of Patent Legal Administration at 571-272-7702.

UNITED STATES PATENT AND TRADEMARK OFFICE

Commissioner for Patents
United States Patent and Trademark Office
P.O. Box 1450
Alexandria, VA 22313-1450
www.uspto.gov

FENNEMORE CRAIG
3003 NORTH CENTRAL AVENUE
SUITE 2600
PHOENIX AZ 85012

MAILED

APR 07 2011

OFFICE OF PETITIONS

In re Application of	:	
CLAGUE, Cynthia T. et al.	:	
Application No. 11/974,906	:	DECISION ON PETITION
Filed: October 16, 2007	:	TO WITHDRAW
Attorney Docket No. **11637.022**	:	FROM RECORD
	:	

This is a decision on the renewed Request to Withdraw as attorney or agent of record under 37 C.F.R. § 1.36(b), filed March 09, 2011.

The request is **NOT APPROVED**.

The Office will no longer accept address changes to a new practitioner or law firm filed with a Request, absent the filing of a power of attorney to the new representative. The Office will either change the correspondence address of record to the most current address information provided for the assignee of the entire interest who properly became of record under 37 CFR 3.71 or, if no assignee of the entire interest has properly been made of record under 37 CFR 3.71, the most current address information provided for the first named inventor.

37 CFR 3.71(c) states:

An assignee becomes of record either in a national patent application or a reexamination proceeding by filing a statement in compliance with § 3.73(b) that is signed by a party who is authorized to act on behalf of the assignee.

Therefore, as there is currently no statement under 37 CFR 3.73(b) of record in the instant application, the Office cannot change the correspondence address to the address on the Request for Withdrawal.

Also, none of the boxes which indicates who is requesting to withdraw from the application was not selected.

All future communications from the Office will continue to be directed to the above-listed address until otherwise notified by applicant.

Telephone inquiries concerning this decision should be directed to the undersigned at 571-272-4231.

Michelle R. Eason
Paralegal Specialist
Office of Petitions

cc: **PHIL MITCHELL**
SCOTTSDALE MEDICAL DEVICES
7300 E. ACOMA DRIVE
SCOTTSDALE, ARIZONA 85260

UNITED STATES PATENT AND TRADEMARK OFFICE

Commissioner for Patents
United States Patent and Trademark Office
P.O. Box 1450
Alexandria, VA 22313-1450
www.uspto.gov

Decision Date : April 12,2011

In re Application of :

Cynthia Clague

Application No : 11974906

Filed: 16-Oct-2007

Attorney Docket No : 11637.022

DECISION ON REQUEST TO WITHDRAW AS ATTORNEY/AGENT OF RECORD

This is an electronic decision on the Request to Withdraw as attorney or agent of record under 37 CFR.§ 1.36(b), filed April 12,2011

The request is **APPROVED**

The request was signed by Rodney J. Fuller (registration no. 46714) on behalf of all the attorneys/agents of record. All attorneys/agents of record have been withdrawn.

Since there are no remaining attorneys of record, all future communications from the Office will be directed the first named inventor or assignee that has properly made itself of record pursuant to 37 CFR 3.71 with correspondence address:

Name	Phil Mitchell
Name2	Scottsdale Medical Devices
Address 1	7300 E. Acoma Drive
Address 2	
City	Scottsdale
State	AZ
Postal Code	85260
Country	US

As a reminder, requester is required to inform the first named inventor or assignee that has properly made itself of record pursuant to 37 CFR 3.71 of the electronically processed petition.

Telephone inquiries concerning this decision should be directed to the Patent Electronic Business Center (EBC) at 866-217-9197.

Office of Petitions

Doc Code: PET.AUTO **Document Description: Petition automatically granted by EFS-Web**	PTO/SB/83 U.S. Patent and Trademark Office Department of Commerce

Electronic Petition Request	**REQUEST FOR WITHDRAWAL AS ATTORNEY OR AGENT AND CHANGE OF CORRESPONDENCE ADDRESS**
Application Number	11974906
Filing Date	16-Oct-2007
First Named Inventor	Cynthia Clague
Art Unit	3731
Examiner Name	JULIE SZPIRA
Attorney Docket Number	11637.022
Title	Vessel tensioning handle and method of vessel harvesting

◉ Please withdraw me as attorney or agent for the above identified patent application and all the practitioners of record.

The reason(s) for this request are those described in 37 CFR:

10.40(c)(1)(iv)

10.40(c)(1)(v)

10.40(b)(c)(1)(vi)

Certifications

☒ I/We have given reasonable notice to the client, prior to the expiration of the response period, that the practitioner(s) intend to withdraw from employment

☒ I/We have delivered to the client or a duly authorized representative of the client all papers and property (including funds) to which the client is entitled

☒ I/We have notified the client of any responses that may be due and the time frame within which the client must respond

Change the correspondence address and direct all future correspondence to the first named inventor or assignee that has properly made itself of record pursuant to 37 CFR 3.71:

Name	Phil Mitchell Scottsdale Medical Devices
Address	7300 E. Acoma Drive
City	Scottsdale
State	AZ
Postal Code	85260

Country	US
I am authorized to sign on behalf of myself and all withdrawing practitioners.	
Signature	/Rodney J. Fuller/
Name	Rodney J. Fuller
Registration Number	46714

UNITED STATES PATENT AND TRADEMARK OFFICE

Commissioner for Patents
United States Patent and Trademark Office
P.O. Box 1450
Alexandria, VA 22313-1450
www.uspto.gov

OBLON, SPIVAK, MCCLELLAND MAIER & NEUSTADT, L.L.P.
1940 DUKE STREET
ALEXANDRIA VA 22314

MAILED
APR 12 2011
OFFICE OF PETITIONS

In re Patent No. 7,917,292	:	
Issue Date: March 29, 2011	:	
Application No. 11/974,911	:	DECISION ON PETITION
Filed: October 16, 2007	:	
Attorney Docket No. 338272US8X	:	

This is a decision on the petition, filed, March 15, 2011, which is being treated as a request under 37 CFR 3.81(b)[1] to correct the assignee's name on the Fee(s) Transmittal form PTOL-85(b) by way of a certificate of correction in the patent to be issued from the above-identified application.

The request is **GRANTED**.

Petitioner states that the correct assignee's name is "First American Real Estate Solution LLC, Westlake (TX)" and that the incorrect assignee's name was included on the Fee(s) Transmittal form PTOL-85(b) at the time of payment of the issue fee. Accordingly, petitioner requests that a certificate of correction be issued to reflect the correct assignee on the front page of the Letters Patent in the patent to be issued from the application.

37 CFR 3.81(b), effective June 25, 2004, reads:

> *After payment of the issue fee:* Any request for issuance of an application in the name of the assignee submitted after the date of payment of the issue fee, and any request for a patent to be corrected to state the name of the assignee, must state that the assignment was submitted for recordation as set forth in § 3.11 before issuance of the patent, and must include a request for a certificate of correction under § 1.323 of this chapter (accompanied by the fee set forth in § 1.20(a) and the processing fee set forth in § 1.17(i) of this chapter.

[1] *See* MPEP 1309, subsection II; and Official Gazette of June 22, 2004.

The request was accompanied by a certificate of correction (and fee) as required by 3.81(b). Further, Office assignment records reflect that "First American Real Estate Solution LLC, Westlake (TX)" is the assignee of record. Accordingly, as the request complies with the provisions of 37 CFR 3.81(b), it would be appropriate for a certificate of correction to be processed after issuance of this application into a patent.

Inquiries concerning this decision should be directed to the Michelle R. Eason at (571) 272-4231. Any questions concerning the issuance of a certificate of correction should be directed to the Certificates of Correction Branch at (571) 272-4200.

This matter is being referred to the Certificates of Correction Branch for processing of a certificate of correction after issuance of this application into a patent.

Thurman Page
Petitions Examiner
Office of Petitions

UNITED STATES PATENT AND TRADEMARK OFFICE

Commissioner for Patents
United States Patent and Trademark Office
P.O. Box 1450
Alexandria, VA 22313-1450
www.uspto.gov

Blakely Sokoloff Taylor & Zafman LLP
1279 Oakmead Parkway
Sunnyvale, CA 94085-4040

MAILED

MAY 09 2011

OFFICE OF PETITIONS

In re Application of	:	
S. Charles Bennett III, et al.	:	
Application No. 11/974,956	:	DECISION ON PETITION
Filed: October 16, 2007	:	TO WITHDRAW
Attorney Docket No. 8017P001	:	FROM RECORD
	:	

This is a decision on the Request to Withdraw as attorney or agent of record under 37 C.F.R. § 1.36(b), filed March 30, 2011.

The request is **APPROVED**.

A grantable request to withdraw as attorney/agent of record must be signed by every attorney/agent seeking to withdraw or contain a clear indication that one attorney is signing on behalf of another/others. A request to withdraw will not be approved unless at least 30 (thirty) days would remain between the date of approval and the later of the expiration date of a time to file a response or the expiration date of the maximum time period which can be extended under 37 C.F.R. § 1.136(a).

The request was signed by Ryan W. Elliott on behalf of all attorneys of record. All attorneys/agents have been withdrawn. Applicant is reminded that there is no attorney of record at this time.

All future correspondence will be directed to the first named inventor Charles Bennett at the address indicated below.

The application became abandoned for failure to timely respond to the Office action mailed August 6, 2010.

Telephone inquiries concerning this decision should be directed to Terri Johnson at 571-272-2991.

/Terri Johnson/
Terri Johnson
Petitions Examiner
Office of Petitions

cc: **Charlie Bennett III**
EZLocalSearch.com, LLC
4933 Tamiami Trail North
Suite 200
Naples, FL 34103

UNITED STATES PATENT AND TRADEMARK OFFICE

UNITED STATES DEPARTMENT OF COMMERCE
United States Patent and Trademark Office
Address: COMMISSIONER FOR PATENTS
P.O. Box 1450
Alexandria, Virginia 22313-1450
www.uspto.gov

APPLICATION NUMBER	FILING OR 371(C) DATE	FIRST NAMED APPLICANT	ATTY. DOCKET NO./TITLE
11/974,956	10/16/2007	S. Charles Bennett III	8017P001

CONFIRMATION NO. 6159

POWER OF ATTORNEY NOTICE

8791
BLAKELY SOKOLOFF TAYLOR & ZAFMAN LLP
1279 OAKMEAD PARKWAY
SUNNYVALE, CA 94085-4040

OC000000047564001

Date Mailed: 05/09/2011

NOTICE REGARDING CHANGE OF POWER OF ATTORNEY

This is in response to the Power of Attorney filed 03/30/2011.

- The withdrawal as attorney in this application has been accepted. Future correspondence will be mailed to the new address of record. 37 CFR 1.33.

/tsjohnson/

Office of Data Management, Application Assistance Unit (571) 272-4000, or (571) 272-4200, or 1-888-786-0101

UNITED STATES PATENT AND TRADEMARK OFFICE

Commissioner for Patents
United States Patent and Trademark Office
P.O. Box 1450
Alexandria, VA 22313-1450
www.uspto.gov

Paper No.

GREENBERG TRAURIG, LLP (SV)
c/o: Greenberg Traurig LLP - Chicago Office
77 West Wacker Drive, Suite 3100
Intellectual Property Department
Chicago IL 60601

MAILED
SEP 13 2011
OFFICE OF PETITIONS

In re Application of	:	
Bennett et al.	:	
Application No. 11/974,956	:	DECISION ON PETITION
Filed: October 16, 2007	:	PURSUANT TO
Attorney Docket No.:	:	37 C.F.R. § 1.137(B)
127789.010100	:	
Title: SYSTEM AND METHOD FOR	:	
CREATING A COLLECTION OF	:	
BUSINESS LISTINGS	:	

This is a decision on the petition pursuant to 37 C.F.R. § 1.137(b), filed August 17, 2011, to revive the above-identified application.

This petition pursuant to 37 C.F.R. § 1.137(b) is **GRANTED**.

The above-identified application became abandoned for failure to file a proper response to the Restriction Requirement, mailed August 6, 2010, which set a shortened statutory period to reply of one month. No response was received, and no extensions of time under the provisions of 37 C.F.R. § 1.136(a) were obtained. Accordingly, the above-identified application became abandoned on November 7, 2010. A notice of abandonment was mailed on April 6, 2011.

A grantable petition pursuant to 37 C.F.R. § 1.137(b) must be accompanied by:

(1) The reply required to the outstanding Office action or notice, unless previously filed;
(2) The petition fee as set forth in 37 C.F.R.

§ 1.17(m);

(3) A statement that the entire delay in filing the required reply from the due date for the reply until the filing of a grantable petition pursuant to this paragraph was unintentional. The Commissioner may require additional information where there is a question whether the delay was unintentional, and;

(4) Any terminal disclaimer (and fee as set forth in 37 C.F.R. § 1.20(d)) required pursuant to paragraph (d) of this section.

With this petition, Petitioner has submitted, *inter alia*, the petition fee, an election of species, and the proper statement of unintentional delay.

As such, the first three requirements of Rule 1.137(b) have been met. The fourth requirement of Rule 1.137(b) is not applicable, as a terminal disclaimer is not required.[1]

The Technology Center will be notified of this decision. The Technology Center's support staff will notify the Examiner of this decision, so that the election of species that was received on August 17, 2011 can be processed in due course.

Petitioner may find it beneficial to view Private PAIR within a fortnight of the present decision to ensure that the revival has been acknowledged by the Technology Center in response to this decision. It is noted that all inquiries with regard to any failure of that change in status should be directed to the Technology Center where that change of status must be effected - **the Office of Petitions cannot effectuate a change of status.**

Telephone inquiries regarding *this decision* should be directed to the undersigned at (571) 272-3225.[2] All other inquiries

---

1 See Rule 1.137(d).

2 Petitioner will note that all practice before the Office should be in writing, and the action of the Office will be based exclusively on the written record in the Office. See 37 C.F.R. § 1.2. As such, Petitioner is reminded that no telephone discussion may be controlling or considered authority for Petitioner's further action(s).

concerning examination procedures or status of the application should be directed to the Technology Center.

/Paul Shanoski/
Paul Shanoski
Senior Attorney
Office of Petitions

UNITED STATES PATENT AND TRADEMARK OFFICE

UNITED STATES DEPARTMENT OF COMMERCE
United States Patent and Trademark Office
Address: COMMISSIONER FOR PATENTS
P.O. Box 1450
Alexandria, Virginia 22313-1450
www.uspto.gov

APPLICATION NO.	FILING DATE	FIRST NAMED INVENTOR	ATTORNEY DOCKET NO.	CONFIRMATION NO.
11/974,964	10/17/2007	Han-Sang Kim	5000-1-1008	6386

33942 7590 04/11/2012
Cha & Reiter, LLC
17 Arcadian Avenue
Suite 208
Paramus, NJ 07652

EXAMINER
MOORE JR, MICHAEL J

ART UNIT	PAPER NUMBER
2467	

MAIL DATE	DELIVERY MODE
04/11/2012	PAPER

Please find below and/or attached an Office communication concerning this application or proceeding.

The time period for reply, if any, is set in the attached communication.

UNITED STATES PATENT AND TRADEMARK OFFICE

Commissioner for Patents
United States Patent and Trademark Office
P.O. Box 1450
Alexandria, VA 22313-1450
www.uspto.gov

April 11, 2012

Cha & Reiter, LLC
17 Arcadian Avenue
Suite 208
Paramus NJ 07652

Re Application of
KIM, HAN-SANG, ET Al
Application: **11/974964**
Filed: **10/17/200**
Attorney Docket No: **5000-1-1008**

: DECISION ON PETITION
: ACCEPTANCE OF COLOR
: DRAWINGS

This is a decision on the Petition to Accept Color Drawings under 37 C.F.R 1.84 (a) (2), received in the United States Patent and Trademark Office (USPTO) October 17, 2007.
The petition is **GRANTED**.
A grantable petition under 37 C.F.R. 1.84(a) (2) must be accompanied by the following.

1. The fee set forth under 37 C.F.R. 1.17(h),
2. Three (3) sets of the color drawings in question, or (1) set if filed via EFS, and
3. The specification containing the following language as the first paragraph in that portion of the specification relating to the brief description of the drawings.

   "The file of this patent contains at least one drawing executed in color. Copies of this patent with color drawing(s) will be provided by the Patent and Trademark Office upon request and payment of the necessary fee."

The petition was accompanied by all of the required fees and drawings. The specification contains the appropriate language. Therefore, the petition is GRANTED.

Telephone inquires relating to this decision may be directed to the undersigned in the Office of Data Management at 571-272-4200.

/Bernadette Queen/
Quality Control Specialist
Office of Data Management
Publications Branch

UNITED STATES PATENT AND TRADEMARK OFFICE

Commissioner for Patents
United States Patent and Trademark Office
P.O. Box 1450

www.uspto.gov

H. JAY SPIEGEL –H. JAY SPIEGEL & ASSOCIATES
P.O. BOX 11
MOUNT VERNON VA 22121

MAILED

DEC 15 2010

OFFICE OF PETITIONS

In re Application of	:	
Michael LONG	:	
Application No. 11/975,022	:	ON PETITION
Filed: October 18, 2007	:	
Attorney Docket No. ECI-2	:	

This is a decision on the petition under the unintentional provisions of 37 CFR 1.137(b), filed November 19, 2010, to revive the above-identified application.

The petition is **GRANTED**.

The application became abandoned for failure to timely file a reply within the meaning of 37 CFR 1.113 to the final Office action of March 17, 2010. The proposed reply required for consideration of a petition to revive must be a Notice of Appeal (and appeal fee required by 37 CFR 41.20(b)(2), an amendment that *prima facie* places the application in condition for allowance, a Request for Continued Examination and submission (37 CFR 1.114), or the filing of a continuing application under 37 CFR 1.53(b). See MPEP 711.03(c)(II)(A)(2). No extensions of time pursuant to the provisions of 37 CFR 1.136(a) were obtained. Accordingly, the date of abandonment of this application is June 18, 2010.

The petition satisfies the requirements of 37 CFR 1.137(b) in that petitioner has supplied (1) the reply in the form of a Request for Continued Examination (RCE) and fee of $405, and the submission required by 37 CFR 1.114; (2) the petition fee of $810; and (3) the required statement of unintentional delay have been received.

There is no indication that the person signing the petition was ever given a power of attorney to prosecute the application. If the person signing the petition desires to receive future correspondence regarding this application, the appropriate power of attorney document must be submitted.

Telephone inquiries concerning this decision should be directed to the undersigned at (571) 272-6735.

This application is being referred to Technology Center AU 3781 for processing of the RCE and for appropriate action by the Examiner in the normal course of business on the amendment submitted in accordance with 37 CFR 1.114.

/Diane C.Goodwyn/
Diane C. Goodwyn
Petitions Examiner
Office of Petitions

UNITED STATES PATENT AND TRADEMARK OFFICE

Commissioner for Patents
United States Patent and Trademark Office
P.O. Box 1450
Alexandria, VA 22313-1450
www.uspto.gov

FLASTER/GREENBERG P.C.
Four Penn Center
1600 John F. Kennedy Boulevard
2nd Floor
PHILADELPHIA, PA 19103

MAILED
MAY 13 2011
OFFICE OF PETITIONS

In re Application of	:	
Melissa Battaglia	:	
Application No. 11/975,106	:	ON PETITION
Filed: October 17, 2007	:	
Attorney Docket No.: B0890-1US	:	

This is a decision in response to the petition under 37 CFR 1.137(b), filed April 4, 2011, to revive the above-identified application.

The petition is **GRANTED**.

This application became abandoned as a result of petitioner's failure to file an appeal brief (and fee required by 37 CFR 41.20(b)(2)) within the time period provided in 37 CFR 41.37(a)(1). As an appeal brief (and appeal brief fee) was not filed within two (2) months of the Notice of Appeal filed March 29, 2010, and no extensions of time under the provisions of 37 CFR 1.136(a) were obtained, the appeal was dismissed and the proceedings as to the rejected claims were terminated. See 37 CFR 1.197(b). As no claim was allowed, the application became abandoned on August 6, 2006. *See* MPEP 1215.04. On March 4, 2011, a Notice of Abandonment was mailed. On April 4, 2011, the present petition was filed.

The petition satisfies the requirements of 37 CFR 1.137(b) in that petitioner has supplied (1) the reply in the form of a Request for Continued Examination (RCE) , including the fee of $405 and the submission required by 37 CFR 1.114; (2) the petition fee of $810; and (3) an adequate statement of unintentional delay.

Extensions of time under 37 CFR 1.136 are available only if asked for prior to or within the response period set by statute. In no case, however, may an applicant respond later than the maximum time period set by statute. The extension of time submitted April 4, 2011 was filed when the provisions of 37 CFR 1.136 could no longer be used. Therefore, this application became abandoned when the unextended time for response had expired. Since no extension of time fees are due on a petition for revival, the $1,175 extension fees submitted after abandonment are being credited to counsel's credit card.

This application is being referred to Technology Center AU 3673 for processing of the RCE and for appropriate action by the Examiner in the normal course of business on the amendment submitted in accordance with 37 CFR 1.114.

Telephone inquiries concerning this decision should be directed to the undersigned at (571) 272-3204.

/SDB/

Sherry D. Brinkley
Petitions Examiner
Office of Petitions

UNITED STATES PATENT AND TRADEMARK OFFICE

Commissioner for Patents
United States Patent and Trademark Office
P.O. Box 1450
Alexandria, VA 22313-1450
www.uspto.gov

MAILED

MAR 07 2011

OFFICE OF PETITIONS

PERKINS COIE LLP
P.O. BOX 1208
SEATTLE, WA 98111-1208

In re Application of	:	
ARAGON, David B. et al.	:	
Application No. 11/975,134	:	DECISION ON PETITION
Filed: October 16, 2007	:	TO WITHDRAW
Attorney Docket No. 0023-0582	:	FROM RECORD
	:	

This is a decision on the Request to Withdraw as attorney or agent of record under 37 C.F.R. § 1.36(b), filed January 27, 2011.

The request is **NOT APPROVED** because it is moot.

A review of the file record indicates that the power of attorney to **PERKINS COIE LLP** has been revoked by the assignee of the patent application on January 25, 2011. Accordingly, the request to withdraw under 37 C.F.R. § 1.36(b) is moot.

All future communications from the Office will continue to be directed to the below-listed address until otherwise notified by applicant.

Telephone inquires concerning this decision should be directed to Tredelle Jackson at 571-272-2783.

/Tredelle D. Jackson/
Paralegal Specialist
Office of Petitions

cc: **HARRITY & HARRITY, LLP**
11350 RANDOM HILLS ROAD
SUITE 600
FAIRFAX VA 22030

SPE RESPONSE FOR CERTIFICATE OF CORRECTION

Paper No.:20100926

DATE : September 26, 2010

TO SPE OF : ART UNIT 1621

SUBJECT : Request for Certificate of Correction on Patent No.: 7767853

A response is requested with respect to the accompanying request for a certificate of correction.

Please complete this form and return with file, within **7** days to:
Certificates of Correction Branch - ST (South Tower) 9A22
Palm location **7590** - Tel. No. (703) 305-8309

With respect to the change(s) requested, correcting Office and/or Applicant's errors, should the patent read as shown in the certificate of correction? No new matter should be introduced, nor should the scope or meaning of the claims be changed.

Thank You For Your Assistance **Certificates of Correction Branch**

The request for issuing the above-identified correction(s) is hereby:

Note your decision on the appropriated box.

☒ **Approved** All changes apply.

☐ **Approved in Part** Specify below which changes **do not** apply.

☐ **Denied** State the reasons for denial below.

Comments:

/DANIEL M SULLIVAN/
Supervisory Patent Examiner.Art Unit 1621

UNITED STATES PATENT AND TRADEMARK OFFICE

Commissioner for Patents
United States Patent and Trademark Office
P.O. Box 1450
Alexandria, VA 22313-1450
www.uspto.gov

DEAN A. CRAINE
9-LAKE BELLEVUE DRIVE
SUITE 208
BELLEVUE, WA 98005

MAILED
JAN 19 2011
OFFICE OF PETITIONS

In re Application of	:	
BUCKLEY, Michael	:	
Application No. 11/975,189	:	DECISION ON PETITION
Filed: October 16, 2007	:	TO WITHDRAW
Attorney Docket No. **INVN136030**	:	FROM RECORD
	:	

This is a decision on the Request to Withdraw as attorney or agent of record under 37 C.F.R. § 1.36(b), filed December 22, 2010.

The request is **NOT APPROVED** as moot.

A review of the file record indicates that the power of attorney to Dean A. Craine has been revoked by the assignee of the patent application on December 23, 2010. Accordingly, the request to withdraw under 37 C.F.R. § 1.36(b) is moot.

All future communications from the Office will continue to be directed to the below-listed address until otherwise notified by applicant.

Telephone inquires concerning this decision should be directed to the undersigned at 571-272-4231.

Michelle R. Eason
Paralegal Specialist
Office of Petitions

cc: **CHRISTENSEN, O'CONNOR, JOHNSON, KINDNESS, PLLC**
1420 FIFTH AVENUE
SUITE 2800
SEATTLE WA 98101-2347

UNITED STATES PATENT AND TRADEMARK OFFICE

Commissioner for Patents
United States Patent and Trademark Office
P.O. Box 1450
Alexandria, VA 22313-1450
www.uspto.gov

COOPER & DUNHAM, LLP
30 ROCKEFELLER PLAZA
20TH FLOOR
NEW YORK NY 10112

MAILED

MAR 25 2011

OFFICE OF PETITIONS

In re Patent No. 7,778,702	:	
Issued: August 17, 2010	:	
Application No. 11/975,240	:	ON PETITION
Filed: October 17, 2007	:	
Attorney Docket No. 78572-A/JPW/	:	

This is a notice regarding your request for acceptance of a fee deficiency submission under 37 CFR 1.28 filed February 15, 2011.

On September 1, 1998, the Court of Appeals for the Federal Circuit held that 37 CFR 1.28(c) is the sole provision governing the time for correction of the erroneous payment of the issue fee as a small entity. **See DH Technology v. Synergystex International, Inc. 154 F.3d 1333, 47 USPQ2d 1865 (Fed. Cir. Sept. 1, 1998).**

The Office no longer investigates or rejects original or reissue applications under 37 CFR 1.56. **1098 Off. Gaz. Pat. Office 502 (January 3, 1989)**. Therefore, nothing in this Notice is intended to imply that an investigation was done.

Your fee deficiency submission under 37 CFR 1.28 is hereby **ACCEPTED**.

This patent is no longer entitled to small entity status. Accordingly, all future fees paid in this patent must be paid at the large entity rate.

Telephone inquires concerning this decision should be directed to the undersigned at (571) 272-7751.

Joan Olszewski
Petitions Examiner
Office of Petitions

UNITED STATES PATENT AND TRADEMARK OFFICE

Commissioner for Patents
United States Patent and Trademark Office
P.O. Box 1450
Alexandria, VA 22313-1450
www.uspto.gov

January 4, 2012

Locke Lord LLP
Attn: IP Docketing
Three World Financial Center
New York NY 10281-2101

In re Application of	:	
Tanizawa, Motooharu, et.al	:	**DECISION ON PETITION**
Application No. 11/975,381	:	
Filed: 10/18/2007	:	***ACCEPTANCE OF COLOR***
Attorney Docket No. 5000-5417	:	***DRAWINGS***

This is a decision on the Petition to Accept Color Drawings under 37 C.F.R 1.84 (a) (2), received in the United States Patent and Trademark Office (USPTO) November 18, 2007.

The petition is **GRANTED**.

A grantable petition under 37 C.F.R. 1.84(a) (2) must be accompanied by the following.

1. The fee set forth under 37 C.F.R. 1.17(h),
2. Three (3) sets of the color drawings in question, or (1) set if filed via EFS, and
3. The specification contains appropriate language referring to the color drawings as the first paragraph in that portion of the specification relating to the brief description of the drawings.

The petition was accompanied by all of the required fees and drawings. The specification contains the appropriate language. Therefore, the petition is GRANTED.

Telephone inquires relating to this decision may be directed to the undersigned in the Office of Data Management at 571-272-4200.

/Diane Terry/
Quality Control Specialist
Office of Data Management
Publications Branch

UNITED STATES PATENT AND TRADEMARK OFFICE

UNITED STATES DEPARTMENT OF COMMERCE
United States Patent and Trademark Office
Address: COMMISSIONER FOR PATENTS
P.O. Box 1450
Alexandria, Virginia 22313-1450
www.uspto.gov

APPLICATION NO.	FILING DATE	FIRST NAMED INVENTOR	ATTORNEY DOCKET NO.	CONFIRMATION NO.
11/975,383	10/18/2007	Corbett W. Stone	021830-001110US	8089

20350 7590 06/01/2011
KILPATRICK TOWNSEND & STOCKTON LLP
TWO EMBARCADERO CENTER
EIGHTH FLOOR
SAN FRANCISCO, CA 94111-3834

EXAMINER
AVIGAN, ADAM

ART UNIT	PAPER NUMBER
4133	

NOTIFICATION DATE	DELIVERY MODE
06/01/2011	ELECTRONIC

Please find below and/or attached an Office communication concerning this application or proceeding.

The time period for reply, if any, is set in the attached communication.

Notice of the Office communication was sent electronically on above-indicated "Notification Date" to the following e-mail address(es):

Docket@kilpatricktownsend.com
ipefiling@kilpatricktownsend.com
jlhice@kilpatrick.foundationip.com

UNITED STATES PATENT AND TRADEMARK OFFICE

Commissioner for Patents
United States Patent and Trademark Office
P.O. Box 1450
Alexandria, VA 22313-1450
www.uspto.gov

Mr. Michael R. Shevlin
TOWNSEND and TOWNSEND and CREW LLP
Two Embarcadero Center, Eighth Floor
San Francisco, California 94111-3834

In re Application of: Corbett W. Stone, et al.	:
Appl. No.: 11/975,383	: DECISION ON PETITION UNDER
Filed: October 18, 2007	: 37 CFR 1.84(a)(2) TO ACCEPT
For: SYSTEM FOR INDUCING DESIRABLE TEMPERATURE EFFECTS ON BODY TISSUE	: COLOR DRAWINGS

This is a decision on the petition under 37 C.F.R. 1.84(a)(2), filed April 9, 2008, requesting acceptance of color drawings.

The petition requests that the color drawings, although not specifically identified, be accepted in lieu of black and white drawings.

A grantable petition under 37 C.F.R. 1.84(a)(2) must be accompanied by a fee set forth under 37 C.F.R. 1.17(h), three (3) sets of the color drawings in question, a black and white photocopy of said drawings, and the specification must contain, or be amended to contain, the following language as the first paragraph in that portion of the specification relating to the brief description of the drawings:

"the file of this patent contains at least one drawing executed in color. Copies of this patent with color drawing(s) will be provided by the Patent and Trademark Office upon request and payment of the necessary fee."

Applicants' submission meets all of the criteria set out above.

Accordingly, the petition is **GRANTED**.

/Edward Look/
Supervisory Patent Examiner
Technology Center 3700

SPE RESPONSE FOR CERTIFICATE OF CORRECTION

Paper No.:20111229

DATE : December 29, 2011

TO SPE OF : ART UNIT 3662

SUBJECT : Request for Certificate of Correction on Patent No.: 8054217

A response is requested with respect to the accompanying request for a certificate of correction.

Please complete this form and return with file, within **7** days to:
Certificates of Correction Branch - PK 3-910
Palm location **7590** - Tel. No. 305-8201

With respect to the change(s) requested, correcting Office and/or Applicant's errors, should the patent read as shown in the certificate of correction? No new matter should be introduced, nor should the scope or meaning of the claims be changed.

Thank You For Your Assistance **Certificates of Correction Branch**

The request for issuing the above-identified correction(s) is hereby:
Note your decision on the appropriate box.

☒ **Approved** **All** changes apply.

☐ **Approved in Part** Specify below which changes **do not** apply.

☐ **Denied** State the reasons for denial below.

Comments:

SPE: /Thomas H. Tarcza/ **Art Unit** 3662

UNITED STATES PATENT AND TRADEMARK OFFICE

Commissioner for Patents
United States Patent and Trademark Office
P.O. Box 1450
Alexandria, VA 22313-1450
www.uspto.gov
DIW Mar-11

BUTZEL LONG
IP DOCKETING DEPT
350 SOUTH MAIN STREET
SUITE 300
ANN ARBOR MI 48104

MAILED
MAR 31 2011
OFFICE OF PETITIONS

In re Application of	:	
Ye et al.	:	
Application Number: 11/975,507	:	ON PETITION
Filing Date: 10/19/2007	:	
Attorney Docket Number: 138077-0024	:	

This is a decision in response to the petition under 37 CFR 1.137(b) filed on February 10, 2011, to revive the above-identified application.

The petition is **DISMISSED AS MOOT**.

A review of the record reveals that on October 7, 2010, an Office action requiring restriction and/or election was mailed, setting a one (1) month shortened statutory period for reply. Extensions of time were available.

On February 10, 2011, the subject petition was filed, along with a response to the restriction requirement.

It is noted that the reply filed on February 10, 2011, is a timely reply to the Office action mailed on October 7, 2010, with a four (4) month extension of time.

Accordingly, a four (4) month extension of time is due. On February 10, 2011, petitioners submitted the petition to revive fee and a three (3) month extension of time fee. The balance due will be credited to counsel's deposit account.

As such, the application was never abandoned, and no petition to revive is necessary.

The application is referred to Technology Center Art Unit 1654 for further processing.

Telephone inquiries concerning this matter may be directed to the undersigned at (571) 272-3231.

D Wood

Douglas I. Wood
Senior Petitions Attorney
Office of Petitions

UNITED STATES PATENT AND TRADEMARK OFFICE

Commissioner for Patents
United States Patent and Trademark Office
P.O. Box 1450
Alexandria, VA 22313-1450
www.uspto.gov

Woodcock Washburn LLP
Cira Centre, 12th Floor
2929 Arch Street
Philadelphia PA 19104-2891

MAILED

SEP 16 2010

OFFICE OF PETITIONS

In re Application of	:	
Aaron J. Manuel	:	
Application No. 11/975,526	:	DECISION ON
Filed: October 19, 2008	:	PETITION TO WITHDRAW
Attorney Docket No. MANU-0003	:	FROM RECORD

This is a decision on the Request to Withdraw as attorney or agent of record under 37 C.F.R. § 1.36(b), filed August 17, 2010.

The request is **APPROVED**.

A grantable request to withdraw as attorney/agent of record must be signed by every attorney/agent seeking to withdraw or contain a clear indication that one attorney is signing on behalf of another/others. A request to withdraw will not be approved unless at least 30 (thirty) days would remain between the date of approval and the later of the expiration date of a time to file a response or the expiration date of the maximum time period which can be extended under 37 C.F.R. § 1.136(a).

The request was signed by Barry Kaplan on behalf of all attorneys/agents associated with customer number 23377. All attorneys/agents associated with customer number 23377 have been withdrawn.

Applicant is reminded that there is no attorney of record at this time.

The correspondence address has been changed and is copied below.

Telephone inquiries concerning this decision should be directed to Kimberly Inabinet at 571-272-4618.

/Kimberly Inabinet/

Kimberly Inabinet
Petitions Examiner
Office of Petitions

cc: Mr. Aaron J. Manuel
502 Pryor Street, SW Unit 226
Atlanta, GA 30312

UNITED STATES PATENT AND TRADEMARK OFFICE

UNITED STATES DEPARTMENT OF COMMERCE
United States Patent and Trademark Office
Address: COMMISSIONER FOR PATENTS
P.O. Box 1450
Alexandria, Virginia 22313-1450
www.uspto.gov

APPLICATION NUMBER	FILING OR 371(C) DATE	FIRST NAMED APPLICANT	ATTY. DOCKET NO./TITLE
11/975,526	10/19/2007	Aaron J. Manuel	MANU-0003

CONFIRMATION NO. 8319

POWER OF ATTORNEY NOTICE

30184
Woodcock Washburn LLP
Cira Centre, 12th Floor
2929 Arch Street
Philadelphia, PA 19104-2891

OC000000043458476

Date Mailed: 09/13/2010

NOTICE REGARDING CHANGE OF POWER OF ATTORNEY

This is in response to the Power of Attorney filed 08/17/2010.

- The withdrawal as attorney in this application has been accepted. Future correspondence will be mailed to the new address of record. 37 CFR 1.33.

/kainabinet/

Office of Data Management, Application Assistance Unit (571) 272-4000, or (571) 272-4200, or 1-888-786-0101

UNITED STATES PATENT AND TRADEMARK OFFICE

Commissioner for Patents
United States Patent and Trademark Office
P.O. Box 1450
Alexandria, VA 22313-1450
www.uspto.gov

INTERNATIONAL BUSINESS MACHINES CORP
IP LAW
555 BAILEY AVENUE , J46/G4
SAN JOSE, CA 95141

MAILED

APR 01 2011

OFFICE OF PETITIONS

In re Application of	:	
Kenneth Carlin Nelson, et al.	:	
Application No.: 11/975,579	:	ON PETITION
Filed: October 18, 2007	:	
Attorney Docket No.: 2005-IP-018647U1P1	:	

This is a decision on the petition, filed March 31, 2011, under 37 CFR 1.313(c)(2) to withdraw the above-identified application from issue after payment of the issue fee.

The file does not indicate a change of address has been submitted, although the address given on the petition differs from the address of record. If appropriate, a change of address should be filed in accordance with MPEP 601.03. A courtesy copy of this decision is being mailed to the address given on the petition; however, the Office will mail all future correspondence solely to the address of record.

The petition is **GRANTED**.

The above-identified application is withdrawn from issue for consideration of a submission under 37 CFR 1.114 (request for continued examination). See 37 CFR 1.313(c)(2).

Petitioner is advised that the issue fee paid on March 18, 2011, cannot be refunded. If, however, this application is again allowed, petitioner may request that it be applied towards the issue fee required by the new Notice of Allowance.[1]

Telephone inquiries relating to this decision should be directed to the undersigned at (571) 272-3204.

The application is being referred to Technology Center AU 2436 for further processing of the request for continued examination under 37 CFR 1.114 and for consideration of the concurrently filed Information Disclosure Statement (IDS).

/SDB/

Sherry D. Brinkley
Petitions Examiner
Office of Petitions

cc: GERO G. MCCLELLAN
PATTERSON & SHERIDAN, LLP
1150 REVOLUTION MILL DRIVE, STUDIO 5
GREENSBORO, NC 27405

---

[1] *The request to apply the issue fee to the new Notice may be satisfied by completing and returning the new Part B – Fee(s) Transmittal Form (along with any balance due at the time of submission). Petitioner is advised that the Issue Fee Transmittal Form must be completed and timely submitted to avoid abandonment of the application.*

UNITED STATES PATENT AND TRADEMARK OFFICE

Commissioner for Patents
United States Patent and Trademark Office
P.O. Box 1450
Alexandria, VA 22313-1450
www.uspto.gov

LAWSON GUTHRIE
14742 NW VANCE DRIVE
PORTLAND OR 97229

MAILED
JUN 20 2011
OFFICE OF PETITIONS

In re Application of	:	
Guthrie	:	
Application No. 11/975,624	:	DECISION
Filed/Deposited: 22 October, 2007	:	
Attorney Docket No. (None)	:	

This is a decision on the petition filed on 23 May, 2011, for revival of an application abandoned due to unintentional delay under 37 C.F.R. §1.137(b).

The petition pursuant to 37 C.F.R. §1.137(b) is **DISMISSED**.

Any request for reconsideration of this decision or any petition in the alternative is to be filed **within two (2) months** from the mail date of this decision. *Note* 37 C.F.R. §1.181(f). The request for reconsideration should include a cover letter and be entitled as a "Renewed Petition under 37 C.F.R. §1.181 to Withdraw the Holding of Abandonment," and/or "Renewed Petition under 37 C.F.R. §1.137(b)."

This is **not** a final agency action within the meaning of 5 U.S.C. §704.

As to the Allegations
of Unintentional Delay

The requirements of a grantable petition pursuant to 37 C.F.R. §1.137(b) are the petition and fee therefor, a reply, a proper statement of unintentional delay under the regulation, and, where applicable, a terminal disclaimer and fee.

Petitioner does not appear to have addressed properly the requirements under the rule. Any deficiencies must be overcome.

BACKGROUND

The record reflects as follows:

Petitioner failed to reply timely and properly to the final Office action mailed on 27 January, 2010 with reply due absent extension of time on or before 27 April, 2010.

Following an Interview Summary of 9 April, 2010, on 27 May, 2010, Petitioner filed, *inter alia*, a request and fee for extension of time, an amendment after final, which the Examiner refused to enter and Petitioner knew or should have known was not as of right and not a proper reply[1] if it did not *prima facie* place the application in condition for allowance, and on 21 June, 2010, the Examiner mailed an Advisory Action.

The application went abandoned by operation of law after midnight 27 May, 2011.

On 16 July, 2010, Petitioner filed, *inter alia*, another amendment after final, which the Examiner refused to enter and Petitioner knew or should have known was not as of right and not a proper reply[2] if it did not *prima facie* place the application in condition for allowance.

The Office mailed the Notice of Abandonment of 5 October, 2010.

On 23 May, 2011, Petitioner filed a petition (with fee) pursuant to 37 C.F.R. §1.137(b) with an averment of unintentional delay, and another amendment after final, which the Examiner refused to enter and Petitioner knew or should have known was not as of right and not a proper reply[3] if it did not *prima facie* place the application in condition for allowance. Thus, Petitioner has failed to submit the reply requirement. As noted above, the requirements of a grantable petition pursuant to 37 C.F.R. §1.137(b) are the petition and fee therefor, a proper reply (to the Office action), a proper statement of unintentional delay under the regulation, and, where applicable, a terminal disclaimer and fee. The petition must be dismissed.

The availability of applications and application papers online to applicants/practitioners who diligently associate their Customer Number with the respective application(s) now provides an applicant/practitioner on-demand information as to events/transactions in an application.

Out of an abundance of caution, Petitioners always are reminded that those registered to practice and all others who make representations before the Office **must** inquire into the underlying facts

---

[1] A proper reply is an amendment *prima facie* placing the application in condition for allowance, a Notice of Appeal, or an RCE (with fee and submission under 37 C.F.R. §1.114). (See: MPEP §711.03(c).)

[2] A proper reply is an amendment *prima facie* placing the application in condition for allowance, a Notice of Appeal, or an RCE (with fee and submission under 37 C.F.R. §1.114). (See: MPEP §711.03(c).)

[3] A proper reply is an amendment *prima facie* placing the application in condition for allowance, a Notice of Appeal, or an RCE (with fee and submission under 37 C.F.R. §1.114). (See: MPEP §711.03(c).)

of representations made to the Office and support averments with the appropriate documentation–since all owe to the Office the continuing duty to disclose.[4]

STATUTES, REGULATIONS

Congress has authorized the Commissioner to "revive an application if the delay is shown to the satisfaction of the Commissioner to have been "unavoidable." 35 U.S.C. §133 (1994). And the regulations at 37 C.F.R. §1.137(a) and (b) set forth the requirements for a Petitioner to revive a previously unavoidably or unintentionally, respectively, abandoned application.[5],[6]

Moreover, the Office has set forth in the Commentary at MPEP §711.03(c)(I) the showing and timeliness requirements for a proper showing for relief under 37 C.F.R. §1.181 in these matters.

Decisions on reviving abandoned applications on the basis of "unavoidable" delay have adopted the reasonably prudent person standard in determining if the delay was unavoidable:

> The word 'unavoidable' . . . is applicable to ordinary human affairs, and requires no more or greater care or diligence than is generally used and observed by prudent and careful men in relation to their most important business. It permits them in the exercise of this care to rely upon the ordinary and trustworthy agencies of mail and telegraph, worthy and reliable employees, and such other means and instrumentalities as are usually employed in such important business. If unexpectedly, or through the unforeseen fault or imperfection of these agencies and instrumentalities, there occurs a failure, it may properly be said to be unavoidable, all other conditions of promptness in its rectification being present.[7]

---

[4] See supplement of 17 June, 1999. The Patent and Trademark Office is relying on petitioner's duty of candor and good faith and accepting a statement made by Petitioner. See Changes to Patent Practice and Procedure, 62 Fed. Reg. at 53160 and 53178, 1203 Off. Gaz. Pat. Office at 88 and 103 (responses to comments 64 and 109)(applicant obligated under 37 C.F.R. §11.18, formerly §10.18, to inquire into the underlying facts and circumstances when providing statements to the Patent and Trademark Office).

[5] See: Changes to Patent Practice and Procedure; Final Rule Notice, 62 Fed. Reg. at 53158-59 (October 10, 1997), 1203 Off. Gaz. Pat. Office at 86-87 (October 21, 1997).

[6] The language of 35 U.S.C. §133 and 37 C.F.R. §1.137(a) is clear, unambiguous, and without qualification: the delay in tendering the reply to the outstanding Office action, as well as filing the first petition seeking revival, must have been unavoidable for the reply now to be accepted on petition. (Therefore, by example, an unavoidable delay in the payment of the Filing Fee might occur if a reply is shipped by the US Postal Service, but due to catastrophic accident, the delivery is not made.) Delays in responding properly raise the question whether delays are unavoidable. Where there is a question whether the delay was unavoidable, Petitioners must meet the burden of establishing that the delay was unavoidable within the meaning of 35 U.S.C. §133 and 37 C.F.R. §1.137(a) And the Petitioner must be diligent in attending to the matter. Failure to do so does not constitute the care required under Pratt, and so cannot satisfy the test for diligence and due care. (By contrast, unintentional delays are those that do not satisfy the very strict statutory and regulatory requirements of unavoidable delay, and also, by definition, are not intentional.))

[7] In re Mattullath, 38 App. D.C. 497, 514-15 (1912)(quoting Ex parte Pratt, 1887 Dec. Comm'r Pat. 31, 32-33 (1887)); see also Winkler v. Ladd, 221 F. Supp. 550, 552, 138 USPQ 666, 167-68 (D.D.C. 1963), aff'd, 143 USPQ 172 (D.C. Cir. 1963); Ex parte Henrich, 1913 Dec. Comm'r Pat. 139, 141 (1913). In addition, decisions on revival are made on a "case-by-case basis, taking all the facts and circumstances into account." Smith v. Mossinghoff, 671 F.2d 533, 538, 213 USPQ 977, 982 (D.C. Cir. 1982). Finally, a petition cannot be granted where a petitioner has failed to meet his or her burden of establishing that the delay was "unavoidable." Haines v. Quigg, 673 F. Supp. 314, 316-17, 5 USPQ2d 1130, 1131-32 (N.D. Ind. 1987).

As to Allegations of
Unintentional Delay

As indicated above, the requirements of a grantable petition pursuant to 37 C.F.R. §1.137(b) are the petition and fee therefor, a proper reply, a proper statement and/or showing of unintentional delay under the regulation, and, where applicable, a terminal disclaimer and fee.

As discussed above, it does not appear that Petitioner has satisfied the requirements under the rule.

Petitioners' attentions always are directed to the guidance in the Commentary at MPEP §711.03(c)(II) as to a petition pursuant to 37 C.F.R. §1.137.

CONCLUSION

Accordingly, the petition pursuant to 37 C.F.R. §1.137(b) is **dismissed**.

Further correspondence with respect to this matter should be addressed as follows:

By Mail: Mail Stop PETITION
Commissioner for Patents
P. O. Box 1450
Alexandria, VA 22313-1450

By hand: U. S. Patent and Trademark Office
Customer Service Window, Mail Stop Petitions
Randolph Building
401 Dulany Street
Alexandria, VA 22314

By facsimile: **(571) 273-8300**
Attn: Office of Petitions

Telephone inquiries regarding this decision may be directed to the undersigned at (571) 272-3214—it is noted, however, that all practice before the Office is in writing (see: 37 C.F.R. §1.2[8]) and the proper authority for action on any matter in this regard are the statutes (35 U.S.C.), regulations (37 C.F.R.) and the commentary on policy (MPEP). Therefore, no telephone discussion may be controlling or considered authority for Petitioner's action(s).

/John J. Gillon, Jr./
John J. Gillon, Jr.
Senior Attorney
Office of Petitions

[8] The regulations at 37 C.F.R. §1.2 provide:
§1.2 Business to be transacted in writing.
All business with the Patent and Trademark Office should be transacted in writing. The personal attendance of applicants or their attorneys or agents at the Patent and Trademark Office is unnecessary. The action of the Patent and Trademark Office will be based exclusively on the written record in the Office. No attention will be paid to any alleged oral promise, stipulation, or understanding in relation to which there is disagreement or doubt.

UNITED STATES PATENT AND TRADEMARK OFFICE

Commissioner for Patents
United States Patent and Trademark Office
P.O. Box 1450
Alexandria, VA 22313-1450
www.uspto.gov

LAWSON GUTHRIE
14742 NW VANCE DRIVE
PORTLAND OR 97229

MAILED

SEP 12 2011

OFFICE OF PETITIONS

In re Application of	:	
Guthrie	:	
Application No. 11/975,624	:	DECISION
Filed/Deposited: 22 October, 2007	:	
Attorney Docket No. (None)	:	

This is a decision on the petition filed on 19 August, 2011, for revival of an application abandoned due to unintentional delay under 37 C.F.R. §1.137(b).

The petition pursuant to 37 C.F.R. §1.137(b) is **GRANTED**.

As to the Allegations
of Unintentional Delay

The requirements of a grantable petition pursuant to 37 C.F.R. §1.137(b) are the petition and fee therefor, a reply, a proper statement of unintentional delay under the regulation, and, where applicable, a terminal disclaimer and fee.

BACKGROUND

The record reflects as follows:

Petitioner failed to reply timely and properly to the final Office action mailed on 27 January, . 2010 with reply due absent extension of time on or before 27 April, 2010.

Following an Interview Summary of 9 April, 2010, on 27 May, 2010, Petitioner filed, *inter alia*, a request and fee for extension of time, an amendment after final, which the Examiner refused to enter and Petitioner knew or should have known was not as of right and not a proper reply[1] if it

[1] A proper reply is an amendment *prima facie* placing the application in condition for allowance, a Notice of Appeal, or an RCE (with fee and submission under 37 C.F.R. §1.114). (See: MPEP §711.03(c).)

did not *prima facie* place the application in condition for allowance, and on 21 June, 2010, the Examiner mailed an Advisory Action.

The application went abandoned by operation of law after midnight 27 May, 2010.[2]

On 16 July, 2010, Petitioner filed, *inter alia*, another amendment after final, which the Examiner refused to enter and Petitioner knew or should have known was not as of right and not a proper reply[3] if it did not *prima facie* place the application in condition for allowance.

The Office mailed the Notice of Abandonment of 5 October, 2010.

On 23 May, 2011, Petitioner filed a petition (with fee) pursuant to 37 C.F.R. §1.137(b) with an averment of unintentional delay, and another amendment after final, which the Examiner refused to enter and Petitioner knew or should have known was not as of right and not a proper reply[4] if it did not *prima facie* place the application in condition for allowance. Thus, Petitioner failed to submit the reply requirement. The requirements of a grantable petition pursuant to 37 C.F.R. §1.137(b) are the petition and fee therefor, a proper reply (to the Office action), a proper statement of unintentional delay under the regulation, and, where applicable, a terminal disclaimer and fee. The petition was dismissed on 20 June, 2011.

On 19 August, 2011, Petitioner re-advanced the petition pursuant to 37 C.F.R. §1.137(b) with a reply in the form of an RCE with fee and submission under 37 C.F.R. §1.114 and an averment of unintentional delay.

The availability of applications and application papers online to applicants/practitioners who diligently associate their Customer Number with the respective application(s) now provides an applicant/practitioner on-demand information as to events/transactions in an application.

Out of an abundance of caution, Petitioners always are reminded that those registered to practice and all others who make representations before the Office **must** inquire into the underlying facts of representations made to the Office and support averments with the appropriate documentation–since all owe to the Office the continuing duty to disclose.[5]

---

[2] Previously misstated as 27 May, 2011.

[3] A proper reply is an amendment *prima facie* placing the application in condition for allowance, a Notice of Appeal, or an RCE (with fee and submission under 37 C.F.R. §1.114). (See: MPEP §711.03(c).)

[4] A proper reply is an amendment *prima facie* placing the application in condition for allowance, a Notice of Appeal, or an RCE (with fee and submission under 37 C.F.R. §1.114). (See: MPEP §711.03(c).)

[5] See supplement of 17 June, 1999. The Patent and Trademark Office is relying on petitioner's duty of candor and good faith and accepting a statement made by Petitioner. See Changes to Patent Practice and Procedure, 62 Fed. Reg. at 53160 and 53178, 1203 Off. Gaz. Pat. Office at 88 and 103 (responses to comments 64 and 109)(applicant obligated under 37 C.F.R. §11.18, formerly §10.18, to inquire into the underlying facts and circumstances when providing statements to the Patent and Trademark Office).

STATUTES, REGULATIONS

Congress has authorized the Commissioner to "revive an application if the delay is shown to the satisfaction of the Commissioner to have been "unavoidable." 35 U.S.C. §133 (1994). And the regulations at 37 C.F.R. §1.137(a) and (b) set forth the requirements for a Petitioner to revive a previously unavoidably or unintentionally, respectively, abandoned application.[6],[7]

Moreover, the Office has set forth in the Commentary at MPEP §711.03(c)(I) the showing and timeliness requirements for a proper showing for relief under 37 C.F.R. §1.181 in these matters.

Decisions on reviving abandoned applications on the basis of "unavoidable" delay have adopted the reasonably prudent person standard in determining if the delay was unavoidable:

> The word 'unavoidable' . . . is applicable to ordinary human affairs, and requires no more or greater care or diligence than is generally used and observed by prudent and careful men in relation to their most important business. It permits them in the exercise of this care to rely upon the ordinary and trustworthy agencies of mail and telegraph, worthy and reliable employees, and such other means and instrumentalities as are usually employed in such important business. If unexpectedly, or through the unforeseen fault or imperfection of these agencies and instrumentalities, there occurs a failure, it may properly be said to be unavoidable, all other conditions of promptness in its rectification being present.[8]

As to Allegations of Unintentional Delay

The requirements of a grantable petition pursuant to 37 C.F.R. §1.137(b) are the petition and fee therefor, a reply, a proper statement of unintentional delay under the regulation, and, where applicable, a terminal disclaimer and fee.

---

[6] See: Changes to Patent Practice and Procedure; Final Rule Notice, 62 Fed. Reg. at 53158-59 (October 10, 1997), 1203 Off. Gaz. Pat. Office at 86-87 (October 21, 1997).

[7] The language of 35 U.S.C. §133 and 37 C.F.R. §1.137(a) is clear, unambiguous, and without qualification: the delay in tendering the reply to the outstanding Office action, as well as filing the first petition seeking revival, must have been unavoidable for the reply now to be accepted on petition. (Therefore, by example, an unavoidable delay in the payment of the Filing Fee might occur if a reply is shipped by the US Postal Service, but due to catastrophic accident, the delivery is not made.) Delays in responding properly raise the question whether delays are unavoidable. Where there is a question whether the delay was unavoidable, Petitioners must meet the burden of establishing that the delay was unavoidable within the meaning of 35 U.S.C. §133 and 37 C.F.R. §1.137(a) And the Petitioner must be diligent in attending to the matter. Failure to do so does not constitute the care required under Pratt, and so cannot satisfy the test for diligence and due care. (By contrast, unintentional delays are those that do not satisfy the very strict statutory and regulatory requirements of unavoidable delay, and also, by definition, are not intentional.))

[8] In re Mattullath, 38 App. D.C. 497, 514-15 (1912)(quoting Ex parte Pratt, 1887 Dec. Comm'r Pat. 31, 32-33 (1887)); see also Winkler v. Ladd, 221 F. Supp. 550, 552, 138 USPQ 666, 167-68 (D.D.C. 1963), aff'd, 143 USPQ 172 (D.C. Cir. 1963); Ex parte Henrich, 1913 Dec. Comm'r Pat. 139, 141 (1913). In addition, decisions on revival are made on a "case-by-case basis, taking all the facts and circumstances into account." Smith v. Mossinghoff, 671 F.2d 533, 538, 213 USPQ 977, 982 (D.C. Cir. 1982). Finally, a petition cannot be granted where a petitioner has failed to meet his or her burden of establishing that the delay was "unavoidable." Haines v. Quigg, 673 F. Supp. 314, 316-17, 5 USPQ2d 1130, 1131-32 (N.D. Ind. 1987).

It appears that the requirements under the rule have been satisfied.

CONCLUSION

Accordingly, the petition pursuant to 37 C.F.R. §1.137(b) is **granted**.

The instant application is released to the Technology Center/AU 3643 for further processing in due course.

Petitioner may find it beneficial to view Private PAIR within a fortnight of the instant decision to ensure that the revival has been acknowledged by the TC/AU in response to this decision. It is noted that all inquiries with regard to status need be directed to the TC/AU where that change of status must be effected—that does not occur in the Office of Petitions.

Telephone inquiries regarding this decision may be directed to the undersigned at (571) 272-3214—it is noted, however , that all practice before the Office is in writing (see: 37 C.F.R. §1.2[9]) and the proper authority for action on any matter in this regard are the statutes (35 U.S.C.), regulations (37 C.F.R.) and the commentary on policy (MPEP). Therefore, no telephone discussion may be controlling or considered authority for Petitioner's action(s).

/John J. Gillon, Jr./
John J. Gillon, Jr.
Senior Attorney
Office of Petitions

[9] The regulations at 37 C.F.R. §1.2 provide:
§1.2 Business to be transacted in writing.
All business with the Patent and Trademark Office should be transacted in writing. The personal attdance of applicants or their attorneys or agents at the Patent and Trademark Office is unnecessary. The action of the Patent and Trademark Office will be based exclusively on the written record in the Office. No attention will be paid to any alleged oral promise, stipulation, or understanding in relation to which there is disagreement or doubt.

UNITED STATES PATENT AND TRADEMARK OFFICE

COMMISSIONER FOR PATENTS
UNITED STATES PATENT AND TRADEMARK OFFICE
P.O. BOX 1450
ALEXANDRIA, VA 22313-1450
WWW.USPTO.GOV

Paper No.

ATER WYNNE LLP
1331 NW Lovejoy St. Suite 900
PORTLAND OR 97209-2785

MAILED

JUN 16 2011

OFFICE OF PETITIONS

In re Application of	:	
Noling and Scarpine	:	
Application No. 11/975,636	:	DECISION ON PETITION
Filed: October 18, 2007	:	PURSUANT TO
Attorney Docket No. 103246-0006	:	37 C.F.R. § 1.182
Title: PASSIVE STORMWATER MANAGEMENT	:	
SYSTEM	:	

This is a decision on the petition pursuant to 37 C.F.R. § 1.182, filed April 13, 2011, requesting a change in the order of the inventors.

Petitioner has submitted the petition fee, along with a listing of the order of the inventors' names that Petitioner prefers.

The petition is **GRANTED.**

The order of the names of the inventors has been changed as follows:

Noling
Scarpine

A filing receipt reflecting this change is enclosed.1

The Technology Center will be notified of this decision, and jurisdiction over this application is transferred to the Technology Center, so that the application may receive further processing. The Technology Center's support staff will notify the Examiner of this decision, so that the present application can receive further processing in due course.

Telephone inquiries regarding *this decision* should be directed to

1 It is noted that the Office improperly entered the inventors names in the order that Petitioner prefers, despite the fact that Mr. Scarpine is listed as the first-named inventor on the declaration that was included on initial presentation. However, this petition is required in order to prevent this error from being corrected during the publications process.

the undersigned at (571) 272-3225.[2] All other inquiries concerning examination procedures or status of the application should be directed to the Technology Center.

/Paul Shanoski/
Paul Shanoski
Senior Attorney
Office of Petitions

Encl. Corrected Filing Receipt

2 Petitioner will note that all practice before the Office should be in writing, and the action of the Office will be based exclusively on the written record in the Office. See 37 C.F.R. § 1.2. As such, Petitioner is reminded that no telephone discussion may be controlling or considered authority for Petitioner's further action(s).

UNITED STATES PATENT AND TRADEMARK OFFICE

UNITED STATES DEPARTMENT OF COMMERCE
United States Patent and Trademark Office
Address: COMMISSIONER FOR PATENTS
P.O. Box 1450
Alexandria, Virginia 22313-1450
www.uspto.gov

APPLICATION NUMBER	FILING or 371(c) DATE	GRP ART UNIT	FIL FEE REC'D	ATTY.DOCKET.NO	TOT CLAIMS	IND CLAIMS
11/975,636	10/18/2007	1778	745	103246-0006	25	4

CONFIRMATION NO. 9184

CORRECTED FILING RECEIPT

35940
ATER WYNNE LLP
1331 NW Lovejoy St. Suite 900
PORTLAND, OR 97209-2785

OC000000048138992

Date Mailed: 06/13/2011

Receipt is acknowledged of this non-provisional patent application. The application will be taken up for examination in due course. Applicant will be notified as to the results of the examination. Any correspondence concerning the application must include the following identification information: the U.S. APPLICATION NUMBER, FILING DATE, NAME OF APPLICANT, and TITLE OF INVENTION. Fees transmitted by check or draft are subject to collection. Please verify the accuracy of the data presented on this receipt. **If an error is noted on this Filing Receipt, please submit a written request for a Filing Receipt Correction. Please provide a copy of this Filing Receipt with the changes noted thereon. If you received a "Notice to File Missing Parts" for this application, please submit any corrections to this Filing Receipt with your reply to the Notice. When the USPTO processes the reply to the Notice, the USPTO will generate another Filing Receipt incorporating the requested corrections**

Applicant(s)

Calvin Paul Noling, Portland, OR;
Daniel Albert Scarpine, PORTLAND, OR;

Assignment For Published Patent Application

StormwateRx, LLC

Power of Attorney: The patent practitioners associated with Customer Number 35940

Domestic Priority data as claimed by applicant

Foreign Applications (You may be eligible to benefit from the **Patent Prosecution Highway** program at the USPTO. Please see http://www.uspto.gov for more information.)

If Required, Foreign Filing License Granted: 11/13/2007

The country code and number of your priority application, to be used for filing abroad under the Paris Convention, is **US 11/975,636**

Projected Publication Date: Not Applicable

Non-Publication Request: No

Early Publication Request: No
**** SMALL ENTITY ****

Title

PASSIVE STORMWATER MANAGEMENT SYSTEM

Preliminary Class

210

PROTECTING YOUR INVENTION OUTSIDE THE UNITED STATES

Since the rights granted by a U.S. patent extend only throughout the territory of the United States and have no effect in a foreign country, an inventor who wishes patent protection in another country must apply for a patent in a specific country or in regional patent offices. Applicants may wish to consider the filing of an international application under the Patent Cooperation Treaty (PCT). An international (PCT) application generally has the same effect as a regular national patent application in each PCT-member country. The PCT process **simplifies** the filing of patent applications on the same invention in member countries, but **does not result** in a grant of "an international patent" and does not eliminate the need of applicants to file additional documents and fees in countries where patent protection is desired.

Almost every country has its own patent law, and a person desiring a patent in a particular country must make an application for patent in that country in accordance with its particular laws. Since the laws of many countries differ in various respects from the patent law of the United States, applicants are advised to seek guidance from specific foreign countries to ensure that patent rights are not lost prematurely.

Applicants also are advised that in the case of inventions made in the United States, the Director of the USPTO must issue a license before applicants can apply for a patent in a foreign country. The filing of a U.S. patent application serves as a request for a foreign filing license. The application's filing receipt contains further information and guidance as to the status of applicant's license for foreign filing.

Applicants may wish to consult the USPTO booklet, "General Information Concerning Patents" (specifically, the section entitled "Treaties and Foreign Patents") for more information on timeframes and deadlines for filing foreign patent applications. The guide is available either by contacting the USPTO Contact Center at 800-786-9199, or it can be viewed on the USPTO website at http://www.uspto.gov/web/offices/pac/doc/general/index.html.

For information on preventing theft of your intellectual property (patents, trademarks and copyrights), you may wish to consult the U.S. Government website, http://www.stopfakes.gov. Part of a Department of Commerce initiative, this website includes self-help "toolkits" giving innovators guidance on how to protect intellectual property in specific countries such as China, Korea and Mexico. For questions regarding patent enforcement issues, applicants may call the U.S. Government hotline at 1-866-999-HALT (1-866-999-4158).

LICENSE FOR FOREIGN FILING UNDER

Title 35, United States Code, Section 184

Title 37, Code of Federal Regulations, 5.11 & 5.15

GRANTED

The applicant has been granted a license under 35 U.S.C. 184, if the phrase "IF REQUIRED, FOREIGN FILING LICENSE GRANTED" followed by a date appears on this form. Such licenses are issued in all applications where the conditions for issuance of a license have been met, regardless of whether or not a license may be required as

set forth in 37 CFR 5.15. The scope and limitations of this license are set forth in 37 CFR 5.15(a) unless an earlier license has been issued under 37 CFR 5.15(b). The license is subject to revocation upon written notification. The date indicated is the effective date of the license, unless an earlier license of similar scope has been granted under 37 CFR 5.13 or 5.14.

This license is to be retained by the licensee and may be used at any time on or after the effective date thereof unless it is revoked. This license is automatically transferred to any related applications(s) filed under 37 CFR 1.53(d). This license is not retroactive.

The grant of a license does not in any way lessen the responsibility of a licensee for the security of the subject matter as imposed by any Government contract or the provisions of existing laws relating to espionage and the national security or the export of technical data. Licensees should apprise themselves of current regulations especially with respect to certain countries, of other agencies, particularly the Office of Defense Trade Controls, Department of State (with respect to Arms, Munitions and Implements of War (22 CFR 121-128)); the Bureau of Industry and Security, Department of Commerce (15 CFR parts 730-774); the Office of Foreign AssetsControl, Department of Treasury (31 CFR Parts 500+) and the Department of Energy.

NOT GRANTED

No license under 35 U.S.C. 184 has been granted at this time, if the phrase "IF REQUIRED, FOREIGN FILING LICENSE GRANTED" DOES NOT appear on this form. Applicant may still petition for a license under 37 CFR 5.12, if a license is desired before the expiration of 6 months from the filing date of the application. If 6 months has lapsed from the filing date of this application and the licensee has not received any indication of a secrecy order under 35 U.S.C. 181, the licensee may foreign file the application pursuant to 37 CFR 5.15(b).

UNITED STATES PATENT AND TRADEMARK OFFICE

UNITED STATES DEPARTMENT OF COMMERCE
United States Patent and Trademark Office
Address: COMMISSIONER FOR PATENTS
P.O. Box 1450
Alexandria, Virginia 22313-1450
www.uspto.gov

APPLICATION NO.	FILING DATE	FIRST NAMED INVENTOR	ATTORNEY DOCKET NO.	CONFIRMATION NO.
11/975,694	10/19/2007	Kevin J. Bowers	30023-006001	8578

69713 7590 05/06/2011
OCCHIUTI ROHLICEK & TSAO, LLP
10 FAWCETT STREET
CAMBRIDGE, MA 02138

EXAMINER
CHEA, PHILIP J

ART UNIT	PAPER NUMBER
2492	

NOTIFICATION DATE	DELIVERY MODE
05/06/2011	ELECTRONIC

Please find below and/or attached an Office communication concerning this application or proceeding.

The time period for reply, if any, is set in the attached communication.

Notice of the Office communication was sent electronically on above-indicated "Notification Date" to the following e-mail address(es):

INFO@ORTPATENT.COM

UNITED STATES PATENT AND TRADEMARK OFFICE

BEFORE THE
BOARD OF PATENT APPEALS AND INTERFERENCES

Ex parte KEVIN J. BOWERS, RON DROR, DAVID SHAW, and MARTIN DENEROFF

Application 11/975,694
Technology Center 2400

DECISION ON PETITION

This is a decision on the "Petition Under Rule 1.181" filed May 2, 2011 (Petition). The Petition seeks "withdrawal of the notice of non-compliant appeal brief mailed on April 29, 2011."[1] Petition 1. The Petition will be treated as a petition to the Chief Administrative Patent Judge under 37 C.F.R. §§ 1.181(a)(3) or 41.3. *See* 75 Fed. Reg. 15,689-90 (Mar. 30, 2010) for authority of the Chief Administrative Patent Judge.

---

[1] Appellants' April 29, 2011 date is based on an electronic notification entered on that date. However, the electronic notification clearly states that "[t]he official date of notification of the outgoing correspondence will be indicated on the form PTOL-90 accompanying the correspondence." That date is April 26, 2011.

FINDINGS

1. On April 8, 2011, Appellants filed an Appeal Brief.

2. On April 26, 2011, the Board of Patent Appeals and Interferences (Board) entered a Notification of Non-Compliant Appeal Brief (Notification). The Notification indicated that the Summary of Claimed Subject Matter was not in compliance with 37 C.F.R. 41.37(c)(1)(v). Notification 2. Specifically, it stated that "Section V Summary of Claimed Subject Matter must identify and map all independent claims separately on appeal to the Specification by page and line number or paragraph number and/or drawings if any by reference characters. (Claims 54, 69 and 75). References to the PG Publication are not accepted." *Id.*

3. On April 27, 2011, Appellants filed a "Response to Notice of Non-Compliant Amendment Under 37 CFR 1.121" (Response). The Response is taken as a response to the Notification of Non-Compliant Appeal Brief of April 26, 2011. In the Response, Appellants argue that "[t]he references set forth are in fact to the specification as filed, and not to the pre-grant publication." Response 2.

4. Before the Response was considered, Appellants filed the present Petition on May 2, 2011 (Petition). The Petition was accompanied by a "Statement In Support of Petition"/"Memorandum In Support of Petition" (both denoted as Statement).

5. In the Statement, Appellants state that "[o]n April 28, 2011, Applicant's attorney spoke to Kita [*sic* Quita] Gould, who said that the Office regarded the originally filed claims as not being a part of the specification." Statement 1. Appellants also state that "[o]n April 29, 2011, the Office mailed a second notice of non-compliant amendment. The second notice was identical to the first notice." Statement 2. The Statement

continues to cite authorities supporting the premise that the claims are part of the specification. Appellants conclude that "[i]f the originally filed claims cannot be relied upon to satisfy Rule 41.37(c)(1)(v), then such claims could never be appealed to the Board. Such an interpretation would thus conflict with 35 USC 134." Statement 4.

RELEVANT AUTHORITY

37 C.F.R. § 1.181(a) provides that:

a) Petition may be taken to the Director:
(1) From any action or requirement of any examiner in the *ex parte* prosecution of an application, or in *ex parte* or *inter partes* prosecution of a reexamination proceeding which is not subject to appeal to the Board of Patent Appeals and Interferences or to the court;
(2) In cases in which a statute or the rules specify that the matter is to be determined directly by or reviewed by the Director; and
(3) To invoke the supervisory authority of the Director in appropriate circumstances. For petitions involving action of the Board of Patent Appeals and Interferences, see § 41.3 of this title.

37 C.F.R. § 41.3 provides that:

(b) *Scope*. This section covers petitions on matters pending before the Board (§§ 41.35, 41.64, 41.103, and 41.205); otherwise, see §§ 1.181 to 1.183 of this title.

DISCUSSION

"The Chief Judge [has] the sole responsibility for determining whether corrected briefs comply with 37 CFR 41.37, and will address any inquiries and petitions regarding notices of noncompliant briefs." 75 Fed. Reg. at 15,690 (Mar. 30, 2010).

As a preliminary matter, it is necessary to clear up two misunderstandings.

First, Appellants are under the impression that the Appeal Brief of April 8, 2011 was found non-compliant because the Summary of Claimed Subject Matter referenced a PG Publication. Response 2. The statement in the Notification that led to this confusion was merely an advisory statement not to rely on a PG Publication in drafting the required concise explanation.

Second, Appellants are also under the impression that the electronic notification of April 29, 2011 is a second Notification of Non-Compliant Appeal Brief. Statement 2. The only Notification of Non-Compliant Appeal Brief was mailed on April 26, 2011. The electronic notification of April 29, 2011 clearly indicates that it is associated with the Notification of April 26, 2011.

Appellants argue throughout the Statement that the Summary of Claimed Subject Matter in the Appeal Brief of April 8, 2011 is appropriate because it references the original claims in the specification. "The purpose of the [Summary of Claimed Subject Matter] requirement is to aid the Board in considering the subject matter of the independent claims so that an informed review of the examiner's adverse determination of patentability can be made." 69 Fed. Reg. 49,960, 49,976 (Aug. 12, 2004). It requires "reference to the specification by page and line number, and to the drawing, if any, by reference characters." *Id.* "While reference to page and line number of the specification requires somewhat more detail than simply summarizing the invention, it is considered important to enable the Board to more quickly determine where the claimed subject matter is described in the application." MPEP § 1205.02.

While the claims are part of the Specification, reliance on just the claims for reference in the Summary of Claimed Subject Matter is insufficient to aid the Board in the consideration of the merits of the appeal. Further, Appellants' application includes 22 pages of drawings but the Summary of Claimed Subject Matter of the Appeal Brief of April 8, 2011 does not refer to any drawings by reference characters, as required by 37 C.F.R. § 41.37(c)(1)(v). Lacking the appropriate supporting references, the Appeal Brief of April 26, 2011 is non-compliant in view of the deficient Summary of Claimed Subject Matter.

DECISION

In view of the foregoing, the Petition to withdraw the Notification of Non-Compliant Appeal Brief of April 26, 2011 is DENIED. To avoid dismissal of the appeal, Appellants must file an amended brief or other appropriate correction (*see* MPEP § 1205.03) within ONE MONTH or THIRTY DAYS from the mailing date of this decision, whichever is longer. EXTENSIONS OF THIS TIME PERIOD MAY BE GRANTED UNDER 37 CFR §1.136.

Merrell C. Cashion, Jr.
Case Management Administrator

UNITED STATES PATENT AND TRADEMARK OFFICE

Commissioner for Patents
United States Patent and Trademark Office
P.O. Box 1450
Alexandria, VA 22313-1450
www.uspto.gov

MAILED
AUG 1 8 2011
OFFICE OF PETITIONS

OCCHIUTI ROHLICEK & TSAO, LLP
10 FAWCETT STREET
CAMBRIDGE, MA 02138

In re Application of	:	
Kevin J. Bowers, et al.	:	
Application No.: 11/975,694	:	ON PETITION
Filed: October 19, 2007	:	
Attorney Docket No.: 30023-006001	:	

This is a decision on the petition, filed August 17, 2011, under 37 CFR 1.313(c)(2) to withdraw the above-identified application from issue after payment of the issue fee.

The petition is not signed by a registered practitioner of record. However, in accordance with 37 CFR 1.34, the signature of Faustino A. Lichauco appearing on the correspondence shall constitute a representation to the United States Patent and Trademark Office that he is authorized to represent the particular party on whose behalf he acts.

The petition is **GRANTED**.

The above-identified application is withdrawn from issue for consideration of a submission under 37 CFR 1.114 (request for continued examination). See 37 CFR 1.313(c)(2).

Petitioner is advised that the issue fee paid on August 1, 2011, cannot be refunded. If, however, this application is again allowed, petitioner may request that it be applied towards the issue fee required by the new Notice of Allowance.[1]

Telephone inquiries relating to this decision should be directed to the undersigned at (571) 272-3204.

The application is being referred to Technology Center AU 2492 for further processing of the request for continued examination under 37 CFR 1.114 and for consideration of the concurrently filed petition under 37 CFR 1.48(a).

/SDB/

Sherry D. Brinkley
Petitions Examiner
Office of Petitions

[1] *The request to apply the issue fee to the new Notice may be satisfied by completing and returning the new Part B – Fee(s) Transmittal Form (along with any balance due at the time of submission). Petitioner is advised that the Issue Fee Transmittal Form must be completed and timely submitted to avoid abandonment of the application.*

UNITED STATES PATENT AND TRADEMARK OFFICE

Commissioner for Patents
United States Patent and Trademark Office
P.O. Box 1450
Alexandria, VA 22313-1450
www.uspto.gov

ROBERT J. DEPKE
LEWIS T. STEADMAN
ROCKEY, DEPKE & LYONS, LLC
SUITE 5450 SEARS TOWER
CHICAGO IL 60606-6306

MAILED

SEP 20 2010

OFFICE OF PETITIONS

In re Application of :
Kasuga :
Application No. 11/975,779 :
Filed: October 22, 2007 :
Attorney Docket No. 075834.01091 :

ON PETITION

This is a decision on the petition under the unintentional provisions of 37 CFR 1.137(b), filed April 23, 2010, to revive the above-identified application.

The petition is **DISMISSED**.

Any request for reconsideration of this decision must be submitted within TWO (2) MONTHS from the mail date of this decision. Extensions of time under 37 CFR 1.136(a) are permitted. The reconsideration request should include a cover letter entitled "Renewed Petition under 37 CFR 1.137(b)." This is **not** a final agency action within the meaning of 5 U.S.C. § 704.

On August 11, 2009 applicant filed a petition for express abandonment to obtain a refund. On August 20, 2009, the petition was granted and the application was abandoned.

A grantable petition under 37 CFR 1.137(b) must be accompanied by: (1) the required reply, unless previously filed; (2) the petition fee as set forth in 37 CFR 1.17(m); (3) a statement that the entire delay in filing the required reply from the due date for the reply until the filing of a grantable petition pursuant to 37 CFR 1.137(b) was unintentional; and (4) any terminal disclaimer (and fee as set forth in 37 CFR 1.20(d)) required by 37 CFR 1.137(d). Where there is a question as to whether either the abandonment or the delay in filing a petition under 37 CFR 1.137 was unintentional, the Director may require additional information. See MPEP 711.03(c)(II)(C) and (D). The instant petition lacks item (3).

With respect to (3) above, the abandonment of the application appears to have been a deliberate decision. As such, the application will not be revived.

As stated in MPEP 711.01, "The applicant (acquiesced in by an assignee of record), or the attorney/agent of record, if any, can sign an express abandonment. It is imperative that the attorney or agent of record exercise every precaution in ascertaining that the abandonment of the application is in accordance with the desires and best interests of the applicant prior to signing a letter of express abandonment of a patent application. Moreover, special care should be taken to ensure that the appropriate application is correctly identified in the letter of abandonment."

In short, the Office looks on express abandonments as acts of deliberation, intentionally performed.

Simply stating that it was a mistake to expressly abandon the instant application without giving any evidence of extenuating circumstances to support this assertion is not acceptable.

Further correspondence with respect to this matter should be delivered through one of the following mediums:

By mail:	Mail Stop PETITIONS Commissioner for Patents Post Office Box 1450 Alexandria, VA 22313-1450
By hand:	Customer Service Window Mail Stop Petitions Randolph Building 401 Dulany Street Alexandria, VA 22314
By fax:	(571) 273-8300 ATTN: Office of Petitions
By internet:	EFS-Web www.uspto.gov/ebc/efs_help.html (for help using EFS-Web call the Patent Electronic Business Center at (866) 217-9197)

Telephone inquiries concerning this decision should be directed to the undersigned at (571) 272-3230.

Shirene Willis Brantley

Shirene Willis Brantley
Senior Petitions Attorney
Office of Petitions

UNITED STATES PATENT AND TRADEMARK OFFICE

Commissioner for Patents
United States Patent and Trademark Office
P.O. Box 1450
Alexandria, VA 22313-1450
www.uspto.gov

GREENBERG TRAURIG, LLP
77 WEST WACKER DRIVE, SUITE 3100
CHICAGO, IL 60601-1732

MAILED
OCT 12 2010
OFFICE OF PETITIONS

In re Application of	:	
Daniel S. MUI, et *al.*	:	
Application No. 11/975,833	:	DECISION GRANTING PETITION
Filed: October 22, 2007	:	UNDER 37 CFR 1.313(c)(2)
Attorney Docket No. **81230.713US**	:	

This is a decision on the petition under 37 CFR 1.313(c)(2), filed October 6, 2010, to withdraw the above-identified application from issue after payment of the issue fee.

The petition is **GRANTED**.

The above-identified application is withdrawn from issue for consideration of a submission under 37 CFR 1.114 (request for continued examination). *See* 37 CFR 1.313(c)(2).

Petitioner is advised that the issue fee paid on September 28, 2010 cannot be refunded. If, however, this application is again allowed, petitioner may request that it be applied towards the issue fee required by the new Notice of Allowance.[1]

Telephone inquiries should be directed to the undersigned at (571) 272-7253.

This application is being referred to Technology Center AU 2441 for processing of the request for continued examination under 37 CFR 1.114 and for consideration of the concurrently filed information disclosure statement.

/Monica A. Graves/
Petitions Examiner, Office of Petitions

[1] *The request to apply the issue fee to the new Notice may be satisfied by completing and returning the new Part B – Fee(s) Transmittal Form (along with any balance due at the time of submission). Petitioner is advised that the Issue Fee Transmittal Form* ***must*** *be completed and timely submitted to avoid abandonment of the application.*

UNITED STATES PATENT AND TRADEMARK OFFICE

Commissioner for Patents
United States Patent and Trademark Office
P.O. Box 1450
Alexandria, VA 22313-1450
www.uspto.gov

REED SMITH LLP
101 SECOND STREET
SUITE 1800
SAN FRANCISCO CA 94105

MAILED
JUN 20 2011
OFFICE OF PETITIONS

In re Application of	:	
DURSKI, Kristopher	:	
Application No. 11/975,844	:	DECISION ON PETITION
Filed: October 22, 2007	:	TO WITHDRAW
Attorney Docket No. **MNTO-01000US1**	:	FROM RECORD
	:	

This is a decision on the Request to Withdraw as attorney or agent of record under 37 C.F.R. § 1.36(b), filed May 27, 2011.

The request is **NOT APPROVED**.

The Office will no longer accept address changes to a new practitioner or law firm filed with a Request, absent the filing of a power of attorney to the new representative. The Office will either change the correspondence address of record to the most current address information provided for the assignee of the entire interest who properly became of record under 37 CFR 3.71 or, if no assignee of the entire interest has properly been made of record under 37 CFR 3.71, the most current address information provided for the first named inventor.

37 CFR 3.71(c) states:

An assignee becomes of record either in a national patent application or a reexamination proceeding by filing a statement in compliance with § 3.73(b) that is signed by a party who is authorized to act on behalf of the assignee.

Therefore, as there is currently no statement under 37 CFR 3.73(b) of record in the instant application, the Office cannot change the correspondence address to the address on the Request for Withdrawal.

All future communications from the Office will continue to be directed to the above-listed address until otherwise notified by applicant.

Telephone inquiries concerning this decision should be directed to the undersigned at 571-272-4231.

Michelle R. Eason
Paralegal Specialist
Office of Petitions

cc: **KDH SYSTEMS, INC.**
3020 EL CERRITO PLAZA, #364
EL CERRITO, CA 94530

UNITED STATES PATENT AND TRADEMARK OFFICE

Commissioner for Patents
United States Patent and Trademark Office
P.O. Box 1450
Alexandria, VA 22313-1450
www.uspto.gov

REED SMITH LLP
101 SECOND STREET
SUITE 1800
SAN FRANCISCO CA 94105

MAILED
JUL 29 2011
OFFICE OF PETITIONS

In re Application of	:	
DURSKI, Kristopher	:	
Application No. 11/975,844	:	DECISION ON PETITION
Filed: October 22, 2007	:	TO WITHDRAW
Attorney Docket No. **MNTO-01000US1**	:	FROM RECORD
	:	

This is a decision on the renewed Request to Withdraw as attorney or agent of record under 37 C.F.R. § 1.36(b), filed July 22, 2011.

The request is **NOT APPROVED**.

The Office will no longer accept address changes to a new practitioner or law firm filed with a Request, absent the filing of a power of attorney to the new representative. The Office will either change the correspondence address of record to the most current address information provided for the assignee of the entire interest who properly became of record under 37 CFR 3.71 or, if no assignee of the entire interest has properly been made of record under 37 CFR 3.71, the most current address information provided for the first named inventor.

37 CFR 3.71(c) states:

An assignee becomes of record either in a national patent application or a reexamination proceeding by filing a statement in compliance with § 3.73(b) that is signed by a party who is authorized to act on behalf of the assignee.

Therefore, as there is currently no statement under 37 CFR 3.73(b) of record in the instant application, the Office cannot change the correspondence address to the address on the Request for Withdrawal.

All future communications from the Office will continue to be directed to the above-listed address until otherwise notified by applicant.

Telephone inquiries concerning this decision should be directed to the undersigned at 571-272-4231.

Michelle R. Eason
Paralegal Specialist
Office of Petitions

cc: **KDH SYSTEMS, INC.**
3020 EL CERRITO PLAZA, #364
EL CERRITO, CA 94530

UNITED STATES PATENT AND TRADEMARK OFFICE

Commissioner for Patents
United States Patent and Trademark Office
P.O. Box 1450
Alexandria, VA 22313-1450
www.uspto.gov

Paper No.

MAILED
JAN 25 2011
OFFICE OF PETITIONS

FISH & RICHARDSON PC
P.O. BOX 1022
MINNEAPOLIS MN 55440-1022

In re Application of Borovoy Application No. 11/975,948 Filing Date: October 23, 2007 Attorney Docket No.: 18601-0011001 Title: ADDING SOCIAL NETWORKING TO DEVICES	:	DECISION ON RENEWED PETITION UNDER 37 C.F.R. § 1.78(A)(3)

This is a decision on the renewed petition pursuant to 37 C.F.R. § 1.78(a)(3), filed September 17, 2010, to accept an unintentionally delayed claim under 35 U.S.C. § 120 for the benefit of priority to one prior-filed U.S. application and one later-filed U.S. application, each set forth in an amendment to the specification that was filed concurrently with this renewed petition.

The renewed petition is **DISMISSED**.

A petition for acceptance of a claim for late priority under 37 C.F.R. § 1.78(a)(3) is only applicable to those applications filed on or after November 29, 2000. Further, the petition is appropriate only after the expiration of the period specified in 37 C.F.R. 1.78(a)(2)(ii). In addition, the petition under 37 C.F.R. 1.78(a)(3) must be accompanied by:

(1) the reference required by 35 U.S.C. § 120 and 37 C.F.R. § 1.78(a)(2)(i) of the prior-filed application, unless previously submitted;
(2) the surcharge set forth in § 1.17(t); and
(3) a statement that the entire delay between the date the claim was due under 37 C.F.R. 1.78(a)(2)(ii) and the date

> the claim was filed was unintentional. The Director may require additional information where there is a question whether the delay was unintentional.

An original petition pursuant to 37 C.F.R. § 1.78(a)(3) was filed on March 18, 2010, and was dismissed via the mailing of a decision on July 27, 2010.

37 C.F.R. § 1.78(a)(3)(iii) requires a statement that the entire delay between the date the claim was due under paragraph (a)(2)(ii) of 37 C.F.R. § 1.78 and the date the claim was filed was unintentional. Since the statements contained in both the original and this renewed petition vary from the language required by 37 C.F.R. § 1.78(a)(3)(iii), the statements contained in these two petitions are being construed as the statement required by 37 C.F.R. § 1.78(a)(3)(iii), and Petitioner must notify the Office if this is not a correct interpretation of the statements contained in these petitions.

Requirements (2) and (3) above have been satisfied. The petition does not satisfy item (1) above.

Pursuant to Rule 1.78(a)(2)(iii), the required reference must be included in an application data sheet, or the specification must contain or be amended to contain such reference in the first sentence(s) following the title. Consequently, Petitioner has submitted an amendment to the specification, so as to present the required reference. However, **the amendment is not acceptable as drafted since it contains an erroneous relationship: this application (filed on October 23, 2007) cannot be a continuation-in-part of application no. 12/704,940 (filed on February 12, 2010). An application cannot claim priority to a later-filed application.**

Before the petition under 37 C.F.R. § 1.78(a)(3) can be granted, a second renewed petition and an amendment which corrects this erroneous relationship is required.

Any reply should include a cover letter entitled "second renewed petition pursuant to 37 C.F.R. § 1.78(a)(3)." The second renewed petition should indicate in a prominent manner that the attorney handling this matter is Paul Shanoski, and may be submitted by mail,[1] hand-delivery,[2] or facsimile.[3] Registered users of EFS-Web

---

1 Mail Stop Petition, Commissioner for Patents, United States Patent and Trademark Office, P.O. Box 1450, Alexandria, VA, 22313-1450.
2 Customer Window, Randolph Building, 401 Dulaney Street, Alexandria, VA, 22314.

may alternatively submit a response to this decision via EFS-Web.[4]

If responding by mail, Petitioner is advised not to place the undersigned's name on the envelope. Only the information that appears in the footnote should be included - adding anything else to the address will delay the delivery of the response to the deciding official.

Telephone inquiries regarding *this decision* should be directed to Senior Attorney Paul Shanoski at (571) 272-3225.[5] All other inquiries concerning examination procedures should be directed to the Technology Center.

Chris Bottorff
Supervisor
Office of Petitions

3 (571) 273-8300 - please note this is a central facsimile number.
4 https://sportal.uspto.gov/authenticate/authenticateuserlocalepf.html
5 Petitioner will note that all practice before the Office should be in writing, and the action of the Office will be based exclusively on the written record in the Office. See 37 C.F.R. § 1.2. As such, Petitioner is reminded that no telephone discussion may be controlling or considered authority for any further action(s) of Petitioner.

UNITED STATES PATENT AND TRADEMARK OFFICE

Commissioner for Patents
United States Patent and Trademark Office
P.O. Box 1450
Alexandria, VA 22313-1450
www.uspto.gov

Paper No.

MAILED

MAY 19 2011

OFFICE OF PETITIONS

FISH & RICHARDSON PC
P.O. BOX 1022
MINNEAPOLIS MN 55440-1022

In re Application of	:	
Borovoy	:	
Application No. 11/975,948	:	DECISION ON SECOND RENEWED
Filing Date: October 23, 2007	:	PETITION UNDER 37 C.F.R.
Attorney Docket No.: 18601-0011001	:	§ 1.78(A)(3)
Title: ADDING SOCIAL NETWORKING TO DEVICES	:	

This is a decision on the second renewed petition pursuant to 37 C.F.R. § 1.78(a)(3), filed February 23, 2011, to accept an unintentionally delayed claim under 35 U.S.C. § 120 for the benefit of priority to one prior-filed U.S. application, set forth in an amendment to the specification that was filed concurrently with this second renewed petition. Both a supplement to this second petition and an amendment to the specification were received on May 5, 2011.

The second renewed petition is **GRANTED**.

A petition for acceptance of a claim for late priority under 37 C.F.R. § 1.78(a)(3) is only applicable to those applications filed on or after November 29, 2000. Further, the petition is appropriate only after the expiration of the period specified in 37 C.F.R. 1.78(a)(2)(ii). In addition, the petition under 37 C.F.R. 1.78(a)(3) must be accompanied by:

(1) the reference required by 35 U.S.C. § 120 and 37 C.F.R. § 1.78(a)(2)(i) of the prior-filed application, unless previously submitted;
(2) the surcharge set forth in § 1.17(t); and
(3) a statement that the entire delay between the date the claim was due under 37 C.F.R. 1.78(a)(2)(ii) and the date

the claim was filed was unintentional. The Director may require additional information where there is a question whether the delay was unintentional.

An original petition pursuant to 37 C.F.R. § 1.78(a)(3) was filed on March 18, 2010, and was dismissed via the mailing of a decision on July 27, 2010.

A renewed petition was filed on September 17, 2010, and dismissed via the mailing of a decision on January 25, 2011, which indicated that requirements of (2) and (3) above had been satisfied.

37 C.F.R. § 1.78(a)(3)(iii) requires a statement that the entire delay between the date the claim was due under paragraph (a)(2)(ii) of 37 C.F.R. § 1.78 and the date the claim was filed was unintentional. Since the statements contained in the original, renewed, and second petitions vary from the language required by 37 C.F.R. § 1.78(a)(3)(iii), the statements contained in these three petitions are being construed as the statement required by 37 C.F.R. § 1.78(a)(3)(iii), and Petitioner must notify the Office if this is not a correct interpretation of the statements contained in these petitions.

With the supplement to this second renewed petition, Petitioner has included an amendment to the specification which has been entered and made of record. It follows that the first requirement of Rule 1.78(a)(3) has been satisfied.

All of the above requirements having been satisfied, the late claim for priority pursuant to 35 U.S.C. § 120 is accepted as being unintentionally delayed.

The granting of this petition to accept the delayed benefit claim to the prior-filed application pursuant to 37 C.F.R. § 1.78(a)(3) should not be construed as meaning that this application is entitled to the benefit of the prior-filed application. In order for this application to be entitled to the benefit of the prior-filed application, all other requirements under 35 U.S.C. § 120 and 37 C.F.R. §§ 1.78(a)(1) and (a)(2) must be met. Similarly, the fact that the corrected Filing Receipt accompanying this decision on petition includes the prior-filed application should not be construed as meaning that Applicant is entitled to the claim for benefit of priority to the prior-filed application noted thereon. Accordingly, the Examiner will, in due course, consider this benefit claim and determine whether the

application is entitled to the benefit of the earlier filing date.

A corrected Filing Receipt, which includes the priority claim to the prior-filed nonprovisional application, accompanies this decision on petition.

It is noted that Petitioner has submitted the petition fee of $1410, along with a $130 processing fee on three occasions: September 17, 2010, February 23, 2011, and May 5, 2011. The $130 processing fee is not required. Accordingly, since each of the three $130 payments is unnecessary, each has been credited to Deposit Account No. 06-1050.

Technology Center Art Unit 2612 will be made aware of this decision, so that the Examiner may consider Applicant's entitlement to claim benefit of priority under 35 U.S.C. § 120 to the prior-filed application.

Telephone inquiries regarding this decision should be directed to Senior Attorney Paul Shanoski at (571) 272-3225.[1]

Anthony Knight
Director
Office of Petitions

Encl. Corrected Filing Receipt

1 Petitioner will note that all practice before the Office should be in writing, and the action of the Office will be based exclusively on the written record in the Office. See 37 C.F.R. § 1.2. As such, Petitioner is reminded that no telephone discussion may be controlling or considered authority for any further action(s) of Petitioner.

UNITED STATES PATENT AND TRADEMARK OFFICE

UNITED STATES DEPARTMENT OF COMMERCE
United States Patent and Trademark Office
Address: COMMISSIONER FOR PATENTS
P.O. Box 1450
Alexandria, Virginia 22313-1450
www.uspto.gov

APPLICATION NUMBER	FILING or 371(c) DATE	GRP ART UNIT	FIL FEE REC'D	ATTY.DOCKET.NO	TOT CLAIMS	IND CLAIMS
11/975,948	10/23/2007	2612	705	18601-0011001	25	3

CONFIRMATION NO. 1155

CORRECTED FILING RECEIPT

26161
FISH & RICHARDSON P.C. (BO)
P.O. BOX 1022
MINNEAPOLIS, MN 55440-1022

OC000000047540271

Date Mailed: 05/18/2011

Receipt is acknowledged of this non-provisional patent application. The application will be taken up for examination in due course. Applicant will be notified as to the results of the examination. Any correspondence concerning the application must include the following identification information: the U.S. APPLICATION NUMBER, FILING DATE, NAME OF APPLICANT, and TITLE OF INVENTION. Fees transmitted by check or draft are subject to collection. Please verify the accuracy of the data presented on this receipt. **If an error is noted on this Filing Receipt, please submit a written request for a Filing Receipt Correction. Please provide a copy of this Filing Receipt with the changes noted thereon. If you received a "Notice to File Missing Parts" for this application, please submit any corrections to this Filing Receipt with your reply to the Notice. When the USPTO processes the reply to the Notice, the USPTO will generate another Filing Receipt incorporating the requested corrections**

Applicant(s)

Richard D. Borovoy, Boston, MA;

Power of Attorney: None

Domestic Priority data as claimed by applicant

This application is a CIP of 10/729,696 12/05/2003 PAT 7,688,211
which is a CIP of 10/396,064 03/24/2003 PAT 7,538,745

Foreign Applications (You may be eligible to benefit from the **Patent Prosecution Highway** program at the USPTO. Please see http://www.uspto.gov for more information.)

If Required, Foreign Filing License Granted: 11/14/2007

The country code and number of your priority application, to be used for filing abroad under the Paris Convention, is **US 11/975,948**

Projected Publication Date: Not Applicable

Non-Publication Request: No

Early Publication Request: No
**** SMALL ENTITY ****

Title

Adding social networking to devices

Preliminary Class

340

PROTECTING YOUR INVENTION OUTSIDE THE UNITED STATES

Since the rights granted by a U.S. patent extend only throughout the territory of the United States and have no effect in a foreign country, an inventor who wishes patent protection in another country must apply for a patent in a specific country or in regional patent offices. Applicants may wish to consider the filing of an international application under the Patent Cooperation Treaty (PCT). An international (PCT) application generally has the same effect as a regular national patent application in each PCT-member country. The PCT process **simplifies** the filing of patent applications on the same invention in member countries, but **does not result** in a grant of "an international patent" and does not eliminate the need of applicants to file additional documents and fees in countries where patent protection is desired.

Almost every country has its own patent law, and a person desiring a patent in a particular country must make an application for patent in that country in accordance with its particular laws. Since the laws of many countries differ in various respects from the patent law of the United States, applicants are advised to seek guidance from specific foreign countries to ensure that patent rights are not lost prematurely.

Applicants also are advised that in the case of inventions made in the United States, the Director of the USPTO must issue a license before applicants can apply for a patent in a foreign country. The filing of a U.S. patent application serves as a request for a foreign filing license. The application's filing receipt contains further information and guidance as to the status of applicant's license for foreign filing.

Applicants may wish to consult the USPTO booklet, "General Information Concerning Patents" (specifically, the section entitled "Treaties and Foreign Patents") for more information on timeframes and deadlines for filing foreign patent applications. The guide is available either by contacting the USPTO Contact Center at 800-786-9199, or it can be viewed on the USPTO website at http://www.uspto.gov/web/offices/pac/doc/general/index.html.

For information on preventing theft of your intellectual property (patents, trademarks and copyrights), you may wish to consult the U.S. Government website, http://www.stopfakes.gov. Part of a Department of Commerce initiative, this website includes self-help "toolkits" giving innovators guidance on how to protect intellectual property in specific countries such as China, Korea and Mexico. For questions regarding patent enforcement issues, applicants may call the U.S. Government hotline at 1-866-999-HALT (1-866-999-4158).

LICENSE FOR FOREIGN FILING UNDER

Title 35, United States Code, Section 184

Title 37, Code of Federal Regulations, 5.11 & 5.15

GRANTED

The applicant has been granted a license under 35 U.S.C. 184, if the phrase "IF REQUIRED, FOREIGN FILING LICENSE GRANTED" followed by a date appears on this form. Such licenses are issued in all applications where the conditions for issuance of a license have been met, regardless of whether or not a license may be required as

set forth in 37 CFR 5.15. The scope and limitations of this license are set forth in 37 CFR 5.15(a) unless an earlier license has been issued under 37 CFR 5.15(b). The license is subject to revocation upon written notification. The date indicated is the effective date of the license, unless an earlier license of similar scope has been granted under 37 CFR 5.13 or 5.14.

This license is to be retained by the licensee and may be used at any time on or after the effective date thereof unless it is revoked. This license is automatically transferred to any related applications(s) filed under 37 CFR 1.53(d). This license is not retroactive.

The grant of a license does not in any way lessen the responsibility of a licensee for the security of the subject matter as imposed by any Government contract or the provisions of existing laws relating to espionage and the national security or the export of technical data. Licensees should apprise themselves of current regulations especially with respect to certain countries, of other agencies, particularly the Office of Defense Trade Controls, Department of State (with respect to Arms, Munitions and Implements of War (22 CFR 121-128)); the Bureau of Industry and Security, Department of Commerce (15 CFR parts 730-774); the Office of Foreign AssetsControl, Department of Treasury (31 CFR Parts 500+) and the Department of Energy.

NOT GRANTED

No license under 35 U.S.C. 184 has been granted at this time, if the phrase "IF REQUIRED, FOREIGN FILING LICENSE GRANTED" DOES NOT appear on this form. Applicant may still petition for a license under 37 CFR 5.12, if a license is desired before the expiration of 6 months from the filing date of the application. If 6 months has lapsed from the filing date of this application and the licensee has not received any indication of a secrecy order under 35 U.S.C. 181, the licensee may foreign file the application pursuant to 37 CFR 5.15(b).

UNITED STATES PATENT AND TRADEMARK OFFICE

Commissioner for Patents
United States Patent and Trademark Office
P.O. Box 1450
Alexandria, VA 22313-1450
www.uspto.gov

BAKER & MCKENZIE LLP
PENNZOIL PLACE, SOUTH TOWER
711 LOUISIANA, SUITE 3400
HOUSTON, TX 77002

MAILED

NOV 22 2010

OFFICE OF PETITIONS

In re Application of	:	
Peter J. WAZNYS, et al	:	
Application No. 11/975,976	:	DECISION ON PETITION
Filed: October 23, 2007	:	TO WITHDRAW
Attorney Docket No. 22224529-000009	:	FROM RECORD
	:	

This is a decision on the Request to Withdraw as attorney or agent of record under 37 C.F.R. § 1.36(b), filed November 3, 2010.

The request is **NOT APPROVED because it is moot.**

A review of the file record indicates that the power of attorney to Tamsen Valoir and the attorneys associated with Customer No. 51738, has been revoked by the assignee of the patent application on November 2, 2010. Accordingly, the request to withdraw under 37 C.F.R. § 1.36(b) is moot.

Telephone inquires concerning this decision should be directed to undersigned at 571-272- 6735.

/DCG/
/Diane C. Goodwyn/
Petitions Examiner
Office of Petitions

Cc: LEHIGH TECHNOLOGIES, INC.
C/O JOHN R. HARRIS
MORRIS, MANNING, & MARTIN
1600 ATLANTA FINANCIAL CENTER,
3343 PEACHTREE ROAD, NE
ATLANTA GA 30326

Paper No.: _____

DATE : 4/23/10

TO SPE OF : ART UNIT 2835 (2800)

SUBJECT : Request for Certificate of Correction for Appl. No.: 11/976,041 Patent No.: 7,663,893

Please respond to this request for a certificate of correction within 7 days.

FOR IFW FILES:

Please review the requested changes/corrections as shown in the **COCIN** document(s) in the IFW application image. No new matter should be introduced, nor should the scope or meaning of the claims be changed.

Please complete the response (see below) and forward the completed response to scanning using document code **COCX**.

FOR PAPER FILES:

Please review the requested changes/corrections as shown in the attached certificate of correction. Please complete this form (see below) and forward it with the file to:

Certificates of Correction Branch (CofC)
Randolph Square – 9D10-A
Palm Location 7580

Ernest C. White, LTE
Randolph Sq. Ste 9D62A
703-756-1590

Thank You For Your Assistance

The request for issuing the above-identified correction(s) is hereby:

Note your decision on the appropriate box.

Xxx Approved **All** changes apply.

☐ **Approved in Part** Specify below which changes **do not** apply.

☐ **Denied** State the reasons for denial below.

Approved

_____ **SPE** /Jinhee J. Lee **ART UNIT** 2835

UNITED STATES PATENT AND TRADEMARK OFFICE

Commissioner for Patents
United States Patent and Trademark Office
P.O. Box 1450
Alexandria, VA 22313-1450
www.uspto.gov

KLEIN, O'NEILL & SINGH, LLP
18200 VON KARMAN AVENUE
SUITE 725
IRVINE CA 92612

MAILED

SEP 19 2011

OFFICE OF PETITIONS

In re Application:
Li-Chih Tseng
Application No. 11/976,055
Filed: October 19, 2007
Attorney Docket No. 1291-060.101

ON PETITION

This is a notice regarding your request for acceptance of a fee deficiency submission under 37 CFR 1.28 filed August 26, 2011.

On September 1, 1998, the Court of Appeals for the Federal Circuit held that 37 CFR 1.28(c) is the sole provision governing the time for correction of the erroneous payment of the issue fee as a small entity. **See DH Technology v. Synergystex International, Inc. 154 F.3d 1333, 47 USPQ2d 1865 (Fed. Cir. Sept. 1, 1998).**

The Office no longer investigates or rejects original or reissue applications under 37 CFR 1.56. **1098 Off. Gaz. Pat. Office 502 (January 3, 1989)**. Therefore, nothing in this Notice is intended to imply that an investigation was done.

Your fee deficiency submission under 37 CFR 1.28 is hereby **ACCEPTED**.

This application is no longer entitled to small entity status. Accordingly, all future fees paid in this application must be paid at the large entity rate.

Telephone inquiries concerning this decision should be directed to the undersigned at (571) 272-7751.

/Joan Olszewski/
Joan Olszewski
Petitions Examiner
Office of Petitions

UNITED STATES PATENT AND TRADEMARK OFFICE

UNITED STATES DEPARTMENT OF COMMERCE
United States Patent and Trademark Office
Address: COMMISSIONER FOR PATENTS
P.O. Box 1450
Alexandria, Virginia 22313-1450
www.uspto.gov

APPLICATION NO.	FILING DATE	FIRST NAMED INVENTOR	ATTORNEY DOCKET NO.	CONFIRMATION NO.
11/976,090	10/19/2007	Hyun Sik Moon	6661-000096/US	7377

30593 7590 02/02/2011
HARNESS, DICKEY & PIERCE, P.L.C.
P.O. BOX 8910
RESTON, VA 20195

EXAMINER
NARAGHI, ALI

ART UNIT	PAPER NUMBER
2891	

MAIL DATE	DELIVERY MODE
02/02/2011	PAPER

Please find below and/or attached an Office communication concerning this application or proceeding.

The time period for reply, if any, is set in the attached communication.

UNITED STATES PATENT AND TRADEMARK OFFICE

COMMISSIONER FOR PATENTS
UNITED STATES PATENT AND TRADEMARK OFFICE
P.O. BOX 1450
ALEXANDRIA, VA 22313-1450
www.uspto.gov

HARNESS, DICKEY & PIERCE, P.L.C.
P.O. Box 8910
Reston, VA 20195

In re Application of: Lee, et al Serial No.: 11/976090 Filed: October 19, 2007	PETITION FOR CORRECTION OF INVENTORSHIP UNDER 37 CFR § 1.48(a)

This is a decision on the petition filed 7 January 2011 to correct inventorship under 37 CFR 1.48 (a).

The petition is GRANTED.

In view of the papers filed 7 January 2011 it has been found that this nonprovisional application, as filed, through error and without deceptive intent, improperly set forth the inventorship, and accordingly, this application has been corrected in compliance with 37 CFR 1.48 (a). The inventorship of this application has been changed by adding:

Shinuk Cho

and deleting:

Hyun Sik Moon and Bon Won Koo

The application will be forwarded to the Office of Initial Patent Examination (OIPE) for issuance of a corrected filing receipt, and correction of Office records to reflect the inventorship as corrected.

KBryant

Kiesha R. Bryant
Supervisory Patent Examiner,
Art Unit 2891

UNITED STATES PATENT AND TRADEMARK OFFICE

Commissioner for Patents
United States Patent and Trademark Office
P.O. Box 1450
Alexandria, VA 22313-1450
www.uspto.gov

MAILED
SEP 30 2011
OFFICE OF PETITIONS

Paper No.

HARNESS, DICKEY & PIERCE, P.L.C.
P.O. BOX 8910
RESTON VA 20195

In re Application of Lee et al. Application No. 11/976,090 Patent No. 7,935,961 Filed: October 19, 2007 Issue Date: May 3, 2011 Attorney Docket Number: 6661-000096/US Title: MULTI-LAYERED BIPOLAR FIELD-EFFECT TRANSISTOR AND METHOD OF MANUFACTURING THE SAME	DECISION ON PETITION PURSUANT TO 37 C.F.R. § 3.81(B)

This is a decision on the "REQUEST FOR CERTIFICATE OF CORRECTION," filed August 9, 2011, to correct the Assignment information on the Issue Fee Transmittal Form PTOL-85(b). This submission is being treated as a petition pursuant to 37 C.F.R. § 3.81(b).[1]

With this petition, Petitioner requests that a Certificate of Correction be issued to correct the assignee information that appears on the face of the patent. Petitioner has included a "Certificate of Correction" for this purpose, which requests the addition of assignee "The Regents of the University of California, 1111 Franklin St., 6th floor Oakland, California 94607-6200."

1 See Official Gazette, June 22, 2004.

Petitioner has set forth that the assignment was submitted for recordation as set forth in 37 C.F.R. § 3.11 before issuance of the patent, and Office records conform that an assignment was received in the Office on May 28, 2008.

37 C.F.R. § 3.81(b), effective June 25, 2004, reads:

(b) After payment of the issue fee: Any request for issuance of an application in the name of the assignee submitted after the date of payment of the issue fee, and any request for a patent to be corrected to state the name of the assignee, must state that the assignment was submitted for recordation as set forth in 3.11 before issuance of the patent, and must include a request for a certificate of correction under 1.323 of this chapter (accompanied by the fee set forth in 1.20(a)) and the processing fee set forth in 1.17(i) of this chapter (emphasis added).

The $100 fee that is associated with the filing of a request for a certificate of correction has been received. However, **Petitioner has not included the $130 processing fee**, and an authorization to charge any fee deficiency to a deposit account was not included with this petition.

Hence, the petition must be **DISMISSED**.

Any reply must be submitted within **TWO MONTHS** from the mail date of this decision. Extensions of time under 37 C.F.R. § 1.136(a) are permitted. The reply should include a cover letter entitled "Renewed Petition pursuant to 37 C.F.R. § 3.81(b)". This is not a final agency action within the meaning of 5 U.S.C § 704.

The renewed petition should indicate in a prominent manner that the attorney handling this matter is Paul Shanoski, and may be submitted by mail[2], hand-delivery[3], or facsimile[4]. Registered users of EFS-Web may alternatively submit a response to this decision via EFS-Web[5].

If responding by mail, Petitioner is advised not to place the undersigned's name on the envelope. Only the information that appears in the footnote should be included - adding anything else to the address will delay the delivery of the response to the undersigned.

---

2 Mail Stop Petition, Commissioner for Patents, United States Patent and Trademark Office, P.O. Box 1450, Alexandria, VA, 22313-1450.
3 Customer Window, Randolph Building, 401 Dulaney Street, Alexandria, VA, 22314.
4 (571) 273-8300: please note this is a central facsimile number.
5 https://sportal.uspto.gov/authenticate/authenticateuserlocalepf.html

Telephone inquiries regarding *this decision* should be directed to the undersigned at (571) 272-3225[6].

Paul Shanoski
Senior Attorney
Office of Petitions

6 Petitioner will note that all practice before the Office should be in writing, and the action of the Office will be based exclusively on the written record in the Office. See 37 C.F.R. § 1.2. As such, Petitioner is reminded that no telephone discussion may be controlling or considered authority for any further action(s) of Petitioner.

UNITED STATES PATENT AND TRADEMARK OFFICE

Commissioner for Patents
United States Patent and Trademark Office
P.O. Box 1450
Alexandria, VA 22313-1450
www.uspto.gov

Paper No.

HARNESS, DICKEY & PIERCE, P.L.C.
P.O. BOX 8910
RESTON VA 20195

MAILED

NOV 16 2011

OFFICE OF PETITIONS

In re Application of Lee et al. Application No. 11/976,090 Patent No. 7,935,961 Filed: October 19, 2007 Issue Date: May 3, 2011 Attorney Docket Number: 6661-000096/US Title: MULTI-LAYERED BIPOLAR FIELD-EFFECT TRANSISTOR AND METHOD OF MANUFACTURING THE SAME	DECISION ON RENEWED PETITION PURSUANT TO 37 C.F.R. § 3.81(B)

This is a decision on the renewed petition pursuant to 37 C.F.R. § 3.81(b), filed on October 5, 2011.

An original petition pursuant to 37 C.F.R. § 3.81(b) was filed on August 9, 2011, where Petitioner requested that a Certificate of Correction be issued to correct the assignee information that appears on the face of the patent. Petitioner included a "Certificate of Correction" for this purpose, which requests the addition of assignee "The Regents of the University of California, 1111 Franklin St., 6th floor Oakland, California 94607-6200."

Petitioner set forth that the assignment was submitted for recordation as set forth in 37 C.F.R. § 3.11 before issuance of the patent, and Office records confirm that an assignment was received in the Office on May 28, 2008.

37 C.F.R. § 3.81(b), effective June 25, 2004, reads:

(b) After payment of the issue fee: Any request for issuance of an application in the name of the assignee submitted after the date of payment of the issue fee, and any request for a patent to be corrected to state the name of the assignee, must state that the assignment was submitted for recordation as set forth in 3.11 before issuance of the patent, and must include a request for a certificate of correction under 1.323 of this chapter (accompanied by the fee set forth in 1.20(a)) and the processing fee set forth in 1.17(i) of this chapter.

The original petition was dismissed via the mailing of a decision on September 30, 2011, which indicated that the $100 fee that is associated with the filing of a request for a certificate of correction has been received, however the $130 processing fee was not included, and an authorization to charge any fee deficiency to a deposit account was not included with the original petition.

With this renewed petition, Petitioner has submitted the $130 processing fee.

This renewed petition is **GRANTED**.

The Certificates of Correction Branch will be notified of this decision so that the requested Certificate of Correction can be issued, adding "The Regents of the University of California, 1111 Franklin St., 6th floor Oakland, California 94607-6200" as an assignee.

Telephone inquiries regarding this decision should be directed to the undersigned at (571) 272-3225. Any questions concerning the issuance of a certificate of correction should be directed to the Certificates of Correction Branch at (703) 756-1814.

Paul Shanoski
Senior Attorney
Office of Petitions

UNITED STATES PATENT AND TRADEMARK OFFICE

Commissioner for Patents
United States Patent and Trademark Office
P.O. Box 1450
Alexandria, VA 22313-1450
www.uspto.gov

HARNESS, DICKEY & PIERCE, P.L.C.
P.O. BOX 8910
RESTON, VA 20195

MAILED
SEP 22 2010
OFFICE OF PETITIONS

Applicant: Reki Nakamura et al.
Appl. No.: 11/976,133
Filing Date: October 22, 2007
Title: Image Sheet Forming Method and Image Sheet Forming Apparatus
Attorney Docket No.: 6150-000100/US
Pub. No.: 2008/0102399 A1
Pub. Date: May 1, 2008

This is a decision on the request for corrected of patent application publication under 37 CFR 1.221(b), received on January 29, 2010 for the above-identified application.

The request is dismissed.

Applicant request that the application be republished because the patent application publication contains material errors wherein the wrong title, abstract, specification and drawings was printed.

37 CFR 1.221 (b) is applicable "only when the Office makes a material mistake which is apparent from Office records.... Any request for a corrected publication or revised patent application publication other than provided as provided in paragraph (a) of this section must be filed **within two months** from the date of the patent application publication. **This period is not extendable.**" A material mistake must affect the public's ability to appreciate the technical disclosure of the patent application publication, to determine the scope of the patent application publication, or to determine the scope of the provisional rights that an applicant may seek to enforce upon issuance of a patent. [1]

The request for corrected publication, received on January 29, 2010, was not timely filed under 37 CFR 1.221(b).

Due to the nature of the errors in this publication, the office will *sua sponte* publish a corrected patent application publication correcting the specification, claims, and abstract.

The corrected patent application publication will be published in due course, unless the application is allowed and the patent is issued before the application is republished.

[1] Changes to Implement Eighteen-Month Publication of Patent Applications, 65 FR 57023, 57038 (Sept. 20, 2000), 1239, Off. Gaz. Pat. Office Notices 63, 75 (Oct. 10, 2000) (final rule).

It is noted that the Attorney Docket No. on the specification does not match the Attorney Docket No. on the transmittal letter filed with the application.

The requirement in 37 CFR 1.98(a)(2)(iii) for a legible copy of the specification, including the claims, and drawings of each cited pending U.S. patent application (or portion of the application which caused it to be listed) is sua sponte waived where the cited pending application is stored in the USPTO's IFW system. See Waiver of the Copy Requirement in 37 CFR 1.98 for Cited Pending U.S. Patent Applications, 1287 O.G. 163 (Oct. 19, 2004). See MPEP 609.

It would greatly benefit the Office if **applicant did not provide copies of papers**, which were previously submitted and/or **a complete copy of the pre-grant publication**, as it unnecessarily increases the cost to the Office. See 37 CFR 1.4(b). A request for corrected publication need only point out what was printed incorrectly in the application, where the error occurs in the publication and where the correct text or drawing is found in the application papers, Marked up Relevant copies of the applications papers and the pre-grant publication may facilitate processing of the request, where it is not readily apparent where the error occurs. If it is not clear why the error is a material error, further explanation may be warranted.

The applicant is advised that a "request for republication of an application previously published" may be filed under 37 CFR 1.221 (a). Such a request for republication "must include a copy of the application compliance with the Office's electronic filing system requirements and be accompanied by the publication fee set forth in § 1.18 (d) and the processing fee set forth in § 1.17 (i)." If the request for republication does not comply with the electronic filing system requirements, the republication will not take place and the publication fee set forth in § 1.18 (d) will be refunded. The processing fee will be retained.

A "Quick Start Guide" for filing a request for a Pre-Grant Publication, such as a request for republication, may be found on the link below:

http://www.uspto.gov/patents/process/file/efs/guidance/index.jsp
OR
http://www.uspto.gov/ebc/portal/efs/pgpub_quickstart.pdf

Any request for republication under 37 CFR 1.221(a), must be submitted via the EFS system, as a "Pre-Grant Publication".

Inquiries relating to this matter may be directed to Mark Polutta at (571) 272-7709.

Mark Polutta
Senior Legal Advisor
Office of Patent Legal Administration
Office of the Deputy Commissioner
for Patent Examination Policy

UNITED STATES PATENT AND TRADEMARK OFFICE

Commissioner for Patents
United States Patent and Trademark Office
P.O. Box 1450
Alexandria, VA 22313-1450
www.uspto.gov

Decision Date : November 8,2011

In re Application of :

Gary Miller

Application No : 11976184

Filed : 22-Oct-2007

Attorney Docket No : 169-101

DECISION ON PETITION

UNDER CFR 1.137(b)

This is an electronic decision on the petition under 37 CFR 1.137(b), filed November 8,2011 , to revive the above-identified application.

The petition is **GRANTED.**

The above-identified application became abandoned for failure to reply in a timely manner to the Notice of Allowance and Issue Fee(s) Due. The date of abandonment is the day after the expiration date of the period set for reply in the Notice.

The electronic petition satisfies the conditions for revival pursuant to the provisions of 37 CFR 1.137(b) in that (1) the reply in the form of payment of the Issue Fee and the Publication Fee (if necessary); (2) the petition fee as set forth in 37 CFR 1.17 (m); (3) the drawing correction and/or other deficiencies (if necessary); and (4) the required statement of unintentional delay have been received. Accordingly, the Issue Fee payment is accepted as having been unintentionally delayed.

It is not apparent whether the person signing the statement of unintentional delay was in a position to have firsthand or direct knowledge of the facts and circumstances of the delay at issue. Nevertheless, such statement is being treated as having been made as the result of a reasonable inquiry into the facts and circumstances of such delay. See 37 CFR 10.18(b) and Changes to Patent Practice and Procedure; Final Rule Notice, 62 Fed. Reg. 53131, 53178 (October 10, 1997), 1203 Off. Gaz. Pat. Office 63, 103 (October 21, 1997). In the event that such an inquiry has not been made, petitioner must make such an inquiry. If such inquiry results in the discovery that it is not correct that the entire delay in filing the required reply from the due date for the reply until the filing of a grantable petition pursuant to 37 CFR 1.137(b) was unintentional, petitioner must notify the Office.

Telephone inquiries concerning this decision should be directed to the Patent Electronic Business Center (EBC) at 866-217-9197.

This application file is being directed to the Office of Data Management.

Office of Petitions

Doc Code: PET.AUTO Document Description: Petition automatically granted by EFS-Web	PTO/SB/64 U.S. Patent and Trademark Office Department of Commerce

Electronic Petition Request	PETITION FOR REVIVAL OF AN APPLICATION FOR PATENT ABANDONED UNINTENTIONALLY UNDER 37 CFR 1.137(b)
Application Number	11976184
Filing Date	22-Oct-2007
First Named Inventor	Gary Miller
Art Unit	2863
Examiner Name	JOHN LE
Attorney Docket Number	169-101
Title	RAMAN SPECTROMETRY AUTHENTICATION

The above-identified application became abandoned for failure to file a timely and proper reply to a notice or action by the United States Patent and Trademark Office. The date of abandonment is the day after the expiration date of the period set for reply in the office notice or action plus any extensions of time actually obtained.

APPLICANT HEREBY PETITIONS FOR REVIVAL OF THIS APPLICATION

NOTE: A grantable petition requires the following items:
(1) Petition fee;
(2) Reply and/or issue fee;
(3) Terminal disclaimer with disclaimer fee – required for all utility and plant applications filed before June 8, 1995; and for all design applications;
(4) Statement that the entire delay was unintentional.

Petition fee
The petition fee under 37CFR 1.17(m) is attached.

☐ Applicant claims SMALL ENTITY status. See 37 CFR 1.27.

☐ Applicant is no longer claiming SMALL ENTITY status. See 37 CFR 1.27(g)(2).

☒ Applicant(s) status remains as SMALL ENTITY.

☐ Applicant(s) status remains as other than SMALL ENTITY.

Issue Fee and Publication Fee :

Issue Fee and Publication Fee must accompany ePetition.

☒ Issue Fee Transmittal is attached

Drawing corrections and/ or other deficiencies.

- (●) Drawing corrections and/ or other deficiencies are not required
- ( ) I certify, in accordance with 37 CFR 1.4.(D)(4), that drawing corrections and/ or other deficiencies have previously been filed on
- ( ) Drawing corrections and/ or other deficiencies are attached.
- [x] STATEMENT: The entire delay in filing the required reply from the due date for the required reply until the filing of a grantable petition under 37 CFR 1.137(b) was unintentional.

THIS PORTION MUST BE COMPLETED BY THE SIGNATORY OR SIGNATORIES

I certify, in accordance with 37 CFR 1.4(d)(4) that I am:

- ( ) An attorney or agent registered to practice before the Patent and Trademark Office who has been given power of attorney in this application.
- (●) An attorney or agent registered to practice before the Patent and Trademark Office, acting in a representative capacity.
- ( ) A sole inventor
- ( ) A joint inventor; I certify that I am authorized to sign this submission on behalf of all of the inventors.
- ( ) A joint inventor; all of whom are signing this e-petition.
- ( ) The assignee of record of the entire interest that has properly made itself of record pursuant to 37 CFR 3.71.

Signature	/Justin P. Miller/
Name	Justin P. Miller
Registration Number	63343

UNITED STATES PATENT AND TRADEMARK OFFICE

Commissioner for Patents
United States Patent and Trademark Office
P.O. Box 1450
Alexandria, VA 22313-1450
www.uspto.gov

STAAS & HALSEY LLP
SUITE 700
1201 NEW YORK AVENUE, N.W.
WASHINGTON DC 20005

MAILED

AUG 15 2011

OFFICE OF PETITIONS

In re Application of	:	
Woo et al.	:	
Application No. 11/976209	:	
Filing or 371(c) Date: 10/22/2007	:	
Attorney Docket Number:	:	
1901.1233	:	ON PETITION

This is a decision on the "Petition Under 37 CFR 1.181(A) to Withdraw the Holding of Abandonment, filed July 13, 2011. The petition is properly treated under 37 CFR 1.181(a).

This Petition is hereby **granted**.

The above-identified application became abandoned for failure to timely and properly reply to the Notice of Allowance and Issue Fee Due ("Notice"), mailed February 28, 2011. The Notice set a non-extendable three (3) month period for reply. No response having been received, the application became abandoned on May 29, 2011.

With the present petition, Applicant has demonstrated non-receipt of the Notice by a preponderance of the evidence.

In view of the foregoing, the holding of abandonment is hereby withdrawn.

The application is being referred to Technology Center Art Unit 2628 for remailing of the Notice and re-setting the period for reply. A copy of the Notice is also enclosed.

Telephone inquiries concerning this matter should be directed to the undersigned at (571) 272-3232.

/DLW/

Derek L. Woods
Attorney
Office of Petitions

UNITED STATES PATENT AND TRADEMARK OFFICE

Commissioner for Patents
United States Patent and Trademark Office
P.O. Box 1450
Alexandria, VA 22313-1450
www.uspto.gov

ERIC M. DOWLING
INTERLINK 731
PO BOX 669435
MIAMI FL 33166

MAILED

SEP 26 2011

OFFICE OF PETITIONS

In re Application of :
DOWLING, et al :
Application No. 11/976,214 : ON PETITION
Filed: October 23, 2007 :
Attorney Docket No. ENCODER.001A :

This is a decision on the petition under the unintentional provisions of 37 CFR 1.137(b), filed September 6, 2011, to revive the above-identified application.

The petition is **DISMISSED**.

The application became abandoned for failure to timely pay the issue fee on or before June 7, 2011, as required by the Notice of Allowance and Fee(s) Due (Notice), mailed March 7, 2011, which set a statutory period for reply of three (3) months. Accordingly, the application became abandoned on June 8, 2011. A Notice of Abandonment was mailed June 20, 2011.

A grantable petition under 37 CFR 1.137(b) must be accompanied by: (1) the required reply, unless previously filed; (2) the petition fee as set forth in 37 CFR 1.17(m); (3) a statement that the entire delay in filing the required reply from the due date for the reply until the filing of a grantable petition pursuant to 37 CFR 1.137(b) was unintentional; and (4) any terminal disclaimer (and fee as set forth in 37 CFR 1.20(d)) required by 37 CFR 1.137(d). Where there is a question as to whether either the abandonment or the delay in filing a petition under 37 CFR 1.137 was unintentional, the Director may require additional information. See MPEP 711.03(c)(II)(C) and (D). The instant petition lacks item(s) (1) and (2).

With respect to item (1): A review of the Office record shows that the petition filed September 6, 2011, indicated a credit card payment was submitted for the issue and publication fees. However, since the payment could not be processed, no fee was collected. In this regard, the required reply has not been received and the petition does not meet the requirements as set out under 37 CFR 1.137(b).

With respect to item (2): The instant petition lacks the petition fee as set out in the provisions of 37 CFR 1.17(m). No consideration on the merits can be given until the required fee deficiency is remitted. Petitioner is encouraged to contact the Office prior to submitting the required fees, as fees are subject to change.

Any request for reconsideration of this decision must be submitted within TWO (2) MONTHS from the mail date of this decision. Extensions of time under 37 CFR 1.136(a) are permitted. The reconsideration request should include a cover letter entitled "Renewed Petition under 37 CFR 1.137(b)." This is **not** a final agency action within the meaning of 5 U.S.C. § 704.

Further correspondence with respect to this matter should be addressed as follows:

By Mail: Mail Stop PETITION
Commissioner for Patents
P. O. Box 1450
Alexandria, VA 22313-1450

By hand: U. S. Patent and Trademark Office
Customer Service Window, Mail Stop Petitions
Randolph Building
401 Dulany Street
Alexandria, VA 22314

The centralized facsimile number is **(571) 273-8300.**

Telephone inquiries concerning this decision should be directed to the undersigned at (571) 272-6735.

/Diane C. Goodwyn/
Diane C. Goodwyn
Petitions Examiner
Office of Petitions

UNITED STATES PATENT AND TRADEMARK OFFICE

Commissioner for Patents
United States Patent and Trademark Office
P.O. Box 1450
Alexandria, VA 22313-1450
www.uspto.gov

ERIC M. DOWLING
INTERLINK 731
PO BOX 669435
MIAMI FL 33166

MAILED

OCT 3 1 2011

OFFICE OF PETITIONS

In re Application of	:	
DOWLING, et al	:	
Application No. 11/976,214	:	DECISION ON PETITION
Filed: October 23, 2007	:	
Attorney Docket No. ENCODER.001A	:	

This is a decision on the renewed petition under the unintentional provisions of 37 CFR 1.137(b), filed October 3, 2011, to revive the above-identified application.

The petition is **GRANTED**.

The application became abandoned for failure to timely pay the issue and publication fees on or before June 7, 2011, as required by the Notice of Allowance and Fee(s) Due, mailed March 7, 2011, which set a statutory period for reply of three (3) months. Accordingly, the application became abandoned on June 8, 2011.

The petition satisfies the requirements of 37 CFR 1.137(b) in that petitioner has supplied (1) the reply in the form of payment of the Issue Fee of $870 and Publication Fee of $300; (2) the petition fee of $930; and (3) the required statement of unintentional delay.

Telephone inquiries concerning this decision should be directed to the undersigned at (571) 272-6735.

All other inquiries should be directed to the Patent Publication Branch at (571) 272-4200.

The application is being referred to Patent Publication Branch for processing in to a patent.

/Diane Goodwyn/
Diane Goodwyn
Petitions Examiner
Office of Petitions

UNITED STATES PATENT AND TRADEMARK OFFICE

Commissioner for Patents
United States Patent and Trademark Office
P.O. Box 1450
Alexandria, VA 22313-1450
www.uspto.gov

ANTONELLI, TERRY, STOUT & KRAUS, LLP
1300 NORTH SEVENTEENTH STREET
SUITE 1800
ARLINGTON VA 22209-3873

MAILED

NOV 17 2011

OFFICE OF PETITIONS

In re Patent No. 8,008,045	: DECISION DISMISSING PETITION
Issue Date: August 30, 2011	: UNDER 37 CFR 1.78(a)(3) AND
Application No. 11/976,232	: REQUEST FOR CERTIFICATE OF
Filed: October 23, 2007	: CORRECTION
Attorney Docket No. 1021.45078VX1	:

This is a decision on the petition, filed October 14, 2011, which is being treated as a petition under 37 CFR 1.78(a)(3), seeking to add a claim for priority under 35 U.S.C. § 120 to nonprovisional Application No. 11/132,286, filed May19, 2005, by way of a certificate of correction.

The petition is **DISMISSED**.

A review of the file record fails to disclose that a claim for the benefit of priority to the above-noted, prior-filed nonprovisional application was made within the time period set forth in 37 CFR 1.78(a)(2)(ii) and further failed to include a proper reference to the prior-filed application as required by 37 CFR 1.78(a)(2)(i) and 1.78(a)(2)(iii).

The instant application was filed on October 23, 2007. Therefore, since this application was filed after November 29, 2000, a petition under 37 CFR 1.78(a)(3), along with submission of a Certificate of Correction, is the appropriate avenue of relief to accept a late claim for the benefit of priority to a prior-filed nonprovisional application after issuance of the application into a patent. *See* MPEP 1481.

A petition for acceptance of a claim for late priority under 37 CFR 1.78(a)(3) must be accompanied by:

(1) the reference required by 35 U.S.C. § 120 and 37 CFR 1.78(a)(2)(i) of the prior-filed application, unless previously submitted;

(2) the surcharge set forth in § 1.17(t); and

(3) a statement that the entire delay between the date the claim was due under 37 CFR 1.78(a)(2)(ii) and the date the claim was filed was unintentional. The Director may require additional information where there is a question whether the delay was unintentional.

The petition does not satisfy item (1) above.

The reference to add the prior-filed application in the first sentence of the specification on page one following the title is not acceptable as drafted since it improperly incorporates by reference the prior-filed application. An incorporation by reference statement added after an application's filing date is not effective because no new matter can be added to an application after its filing date (see 35 U.S.C. § 132(a)). If an incorporation by reference statement is included in an amendment to the specification to add a benefit claim under 35 U.S.C. § 120 after the filing date of the application, the amendment would not be proper. When a benefit claim under 35 U.S.C. § 120 is submitted after the filing of an application, the reference to the prior application cannot include an incorporation by reference statement of the prior application. See Dart Industries v. Banner, 636 F.2d 684, 207 USPQ 273 (C.A.D.C. 1980). Note MPEP §§ 201.06(c) and 608.04(b).

If reconsideration of this decision is desired, a renewed petition under 37 CFR § 1.78(a)(3) and a certificate of correction that does not incorporate by reference Application No. 11/132,286 are required.

Further correspondence with respect to this matter should be addressed as follows:

By mail: Mail Stop PETITIONS
Commissioner for Patents
Post Office Box 1450
Alexandria, VA 22313-1450

By hand: Customer Service Window
Mail Stop Petitions
Randolph Building
401 Dulany Street
Alexandria, VA 22314

By fax: (571) 273-8300
ATTN: Office of Petitions

By internet: EFS-Web
www.uspto.gov/ebc/efs_help.html
(for help using EFS-Web call the
Patent Electronic Business Center
at (866) 217-9197)

Telephone inquiries may be directed to the undersigned at (571) 272-3230.

Shirene Willis Brantley

Shirene Willis Brantley
Senior Petitions Attorney
Office of Petitions

UNITED STATES PATENT AND TRADEMARK OFFICE

Commissioner for Patents
United States Patent and Trademark Office
P.O. Box 1450
Alexandria, VA 22313-1450
www.uspto.gov

ANTONELLI, TERRY, STOUT & KRAUS, LLP
1300 NORTH SEVENTEENTH STREET
SUITE 1800
ARLINGTON VA 22209-3873

MAILED
JAN 30 2012
OFFICE OF PETITIONS

In re Patent No. 8,008,045	: DECISION GRANTING PETITION
Issue Date: August 30, 2011	: UNDER 37 CFR 1.78(a)(3) AND
Application No. 11/976,232	: REQUEST FOR CERTIFICATE OF
Filed: October 23, 2007	: CORRECTION
Attorney Docket No. 1021.45078VX1	:

This is a decision on the renewed petition, filed November 29, 2011, under 37 CFR 1.78(a)(3), seeking to add a claim for priority under 35 U.S.C. § 120 to nonprovisional Application No. 11/132,286, filed May19, 2005, by way of a certificate of correction.

The petition is **GRANTED**.

A review of the file record fails to disclose that a claim for the benefit of priority to the above-noted, prior-filed nonprovisional application was made within the time period set forth in 37 CFR 1.78(a)(2)(ii) and further failed to include a proper reference to the prior-filed application as required by 37 CFR 1.78(a)(2)(i) and 1.78(a)(2)(iii).

The instant application was filed on October 23, 2007. Therefore, since this application was filed after November 29, 2000, a petition under 37 CFR 1.78(a)(3), along with submission of a Certificate of Correction, is the appropriate avenue of relief to accept a late claim for the benefit of priority to a prior-filed nonprovisional application after issuance of the application into a patent. *See* MPEP 1481.

A petition for acceptance of a claim for late priority under 37 CFR 1.78(a)(3) must be accompanied by:

(1) the reference required by 35 U.S.C. § 120 and 37 CFR 1.78(a)(2)(i) of the prior-filed application, unless previously submitted;
(2) the surcharge set forth in § 1.17(t); and
(3) a statement that the entire delay between the date the claim was due under 37 CFR 1.78(a)(2)(ii) and the date the claim was filed was unintentional. The Director may require additional information where there is a question whether the delay was unintentional.

As the petition for acceptance of an unintentionally delayed claim for the benefit of priority under 35 U.S.C. § 120 to the above-noted, prior-filed nonprovisional application satisfies the conditions of 37 CFR 1.78(a)(3), the petition is granted.

A corrected Filing Receipt, which includes the priority claim to the above-noted, prior-filed nonprovisional application, accompanies this decision on petition.

Petitioner is advised that the granting of this petition and the mailing of a corrected Filing Receipt should not be viewed as an indication that a determination has been made that this application is entitled to claim benefit of the prior-filed application. A determination that applicant is entitled to claim benefit of the prior-filed application will be made by the Examiner prior to the mailing of a certificate of correction.

Any inquiries concerning this decision may be directed to the undersigned at (571) 272-3230.

This application is being referred to the Certificates of Correction Branch for processing the request for a certificate of correction in accordance with this decision on the petition under 37 CFR 1.78(a)(3).

Shirene Willis Brantley

Shirene Willis Brantley
Senior Petitions Attorney
Office of Petitions

ATTACHMENT: Corrected Filing Receipt

UNITED STATES PATENT AND TRADEMARK OFFICE

UNITED STATES DEPARTMENT OF COMMERCE
United States Patent and Trademark Office
Address: COMMISSIONER FOR PATENTS
P.O. Box 1450
Alexandria, Virginia 22313-1450
www.uspto.gov

APPLICATION NUMBER	FILING or 371(c) DATE	GRP ART UNIT	FIL FEE REC'D	ATTY.DOCKET.NO	TOT CLAIMS	IND CLAIMS
11/976,232	10/23/2007	1637	1330	1021.45078VX1	3	1

CONFIRMATION NO. 9198

CORRECTED FILING RECEIPT

20457
ANTONELLI, TERRY, STOUT & KRAUS, LLP
1300 NORTH SEVENTEENTH STREET
SUITE 1800
ARLINGTON, VA 22209-3873

OC000000052249001

Date Mailed: 01/27/2012

Receipt is acknowledged of this non-provisional patent application. The application will be taken up for examination in due course. Applicant will be notified as to the results of the examination. Any correspondence concerning the application must include the following identification information: the U.S. APPLICATION NUMBER, FILING DATE, NAME OF APPLICANT, and TITLE OF INVENTION. Fees transmitted by check or draft are subject to collection. Please verify the accuracy of the data presented on this receipt. **If an error is noted on this Filing Receipt, please submit a written request for a Filing Receipt Correction. Please provide a copy of this Filing Receipt with the changes noted thereon. If you received a "Notice to File Missing Parts" for this application, please submit any corrections to this Filing Receipt with your reply to the Notice. When the USPTO processes the reply to the Notice, the USPTO will generate another Filing Receipt incorporating the requested corrections**

Applicant(s)

Maiko Tanabe, Tokyo, JAPAN;
Chihiro Uematsu, Kawasaki, JAPAN;

Power of Attorney:

David Terry--20178
Donald Antonelli--20296
Melvin Kraus--22466
Donald Stout--26422
Gregory Montone--28141
William Solomon--28565
Ronald Shore--28577
Alan Schiavelli--32087

Domestic Priority data as claimed by applicant

This application is a DIV of 11/132,286 05/19/2005 ABN

Foreign Applications (You may be eligible to benefit from the **Patent Prosecution Highway** program at the USPTO. Please see http://www.uspto.gov for more information.)
JAPAN 2004-149448 05/19/2004

Request to Retrieve - This application either claims priority to one or more applications filed in an intellectual property Office that participates in the Priority Document Exchange (PDX) program or contains a proper **Request to Retrieve Electronic Priority Application(s)** (PTO/SB/38 or its equivalent). Consequently, the USPTO will attempt to electronically retrieve these priority documents.

If Required, Foreign Filing License Granted: 02/06/2009

The country code and number of your priority application, to be used for filing abroad under the Paris Convention, is **US 11/976,232**

Projected Publication Date: Not Applicable

Non-Publication Request: No

Early Publication Request: No
Title

PRIMERS FOR ISOTHERMAL AMPLIFICATION OF HEPATITIS C VIRUS

Preliminary Class

435

PROTECTING YOUR INVENTION OUTSIDE THE UNITED STATES

Since the rights granted by a U.S. patent extend only throughout the territory of the United States and have no effect in a foreign country, an inventor who wishes patent protection in another country must apply for a patent in a specific country or in regional patent offices. Applicants may wish to consider the filing of an international application under the Patent Cooperation Treaty (PCT). An international (PCT) application generally has the same effect as a regular national patent application in each PCT-member country. The PCT process **simplifies** the filing of patent applications on the same invention in member countries, but **does not result** in a grant of "an international patent" and does not eliminate the need of applicants to file additional documents and fees in countries where patent protection is desired.

Almost every country has its own patent law, and a person desiring a patent in a particular country must make an application for patent in that country in accordance with its particular laws. Since the laws of many countries differ in various respects from the patent law of the United States, applicants are advised to seek guidance from specific foreign countries to ensure that patent rights are not lost prematurely.

Applicants also are advised that in the case of inventions made in the United States, the Director of the USPTO must issue a license before applicants can apply for a patent in a foreign country. The filing of a U.S. patent application serves as a request for a foreign filing license. The application's filing receipt contains further information and guidance as to the status of applicant's license for foreign filing.

Applicants may wish to consult the USPTO booklet, "General Information Concerning Patents" (specifically, the section entitled "Treaties and Foreign Patents") for more information on timeframes and deadlines for filing foreign patent applications. The guide is available either by contacting the USPTO Contact Center at 800-786-9199, or it can be viewed on the USPTO website at http://www.uspto.gov/web/offices/pac/doc/general/index.html.

For information on preventing theft of your intellectual property (patents, trademarks and copyrights), you may wish to consult the U.S. Government website, http://www.stopfakes.gov. Part of a Department of Commerce initiative, this website includes self-help "toolkits" giving innovators guidance on how to protect intellectual property in specific countries such as China, Korea and Mexico. For questions regarding patent enforcement issues, applicants may call the U.S. Government hotline at 1-866-999-HALT (1-866-999-4158).

LICENSE FOR FOREIGN FILING UNDER

Title 35, United States Code, Section 184

Title 37, Code of Federal Regulations, 5.11 & 5.15

GRANTED

The applicant has been granted a license under 35 U.S.C. 184, if the phrase "IF REQUIRED, FOREIGN FILING LICENSE GRANTED" followed by a date appears on this form. Such licenses are issued in all applications where the conditions for issuance of a license have been met, regardless of whether or not a license may be required as set forth in 37 CFR 5.15. The scope and limitations of this license are set forth in 37 CFR 5.15(a) unless an earlier license has been issued under 37 CFR 5.15(b). The license is subject to revocation upon written notification. The date indicated is the effective date of the license, unless an earlier license of similar scope has been granted under 37 CFR 5.13 or 5.14.

This license is to be retained by the licensee and may be used at any time on or after the effective date thereof unless it is revoked. This license is automatically transferred to any related applications(s) filed under 37 CFR 1.53(d). This license is not retroactive.

The grant of a license does not in any way lessen the responsibility of a licensee for the security of the subject matter as imposed by any Government contract or the provisions of existing laws relating to espionage and the national security or the export of technical data. Licensees should apprise themselves of current regulations especially with respect to certain countries, of other agencies, particularly the Office of Defense Trade Controls, Department of State (with respect to Arms, Munitions and Implements of War (22 CFR 121-128)); the Bureau of Industry and Security, Department of Commerce (15 CFR parts 730-774); the Office of Foreign AssetsControl, Department of Treasury (31 CFR Parts 500+) and the Department of Energy.

NOT GRANTED

No license under 35 U.S.C. 184 has been granted at this time, if the phrase "IF REQUIRED, FOREIGN FILING LICENSE GRANTED" DOES NOT appear on this form. Applicant may still petition for a license under 37 CFR 5.12, if a license is desired before the expiration of 6 months from the filing date of the application. If 6 months has lapsed from the filing date of this application and the licensee has not received any indication of a secrecy order under 35 U.S.C. 181, the licensee may foreign file the application pursuant to 37 CFR 5.15(b).

SelectUSA

The United States represents the largest, most dynamic marketplace in the world and is an unparalleled location for business investment, innovation and commercialization of new technologies. The USA offers tremendous resources and advantages for those who invest and manufacture goods here. Through SelectUSA, our nation works to encourage, facilitate, and accelerate business investment. To learn more about why the USA is the best country in the world to develop technology, manufacture products, and grow your business, visit SelectUSA.gov.

UNITED STATES PATENT AND TRADEMARK OFFICE

Commissioner for Patents
United States Patent and Trademark Office
P.O. Box 1450
Alexandria, VA 22313-1450
www.uspto.gov

MAILED
SEP 13 2010
OFFICE OF PETITIONS

OLIFF & BERRIDGE PLC
P.O. BOX 320850
ALEXANDRIA, VA 22320-4850

In re Application of	:	
Atsushi Kamada et al	:	
Application No. 11/976,290	:	DECISION GRANTING PETITION
Filed: October 23, 2007	:	UNDER 37 CFR 1.313(c)(2)
Attorney Docket No. 133131	:	

This is a decision on the petition under 37 CFR 1.313(c)(2), filed September 13, 2010, to withdraw the above-identified application from issue after payment of the issue fee.

The petition is **GRANTED**.

The above-identified application is withdrawn from issue for consideration of a submission under 37 CFR 1.114 (request for continued examination). *See* 37 CFR 1.313(c)(2).

Petitioner is advised that the issue fee paid on August 24, 2010, cannot be refunded. If, however, this application is again allowed, petitioner may request that it be applied towards the issue fee required by the new Notice of Allowance.[1]

Telephone inquiries should be directed to the undersigned at (571) 272-3208.

This application is being referred to Technology Center AU 3655 for processing of the request for continued examination under 37 CFR 1.114 and for consideration of the concurrently filed IDS.

/Karen Creasy/
Karen Creasy
Petitions Examiner
Office of Petitions

[1] *The request to apply the issue fee to the new Notice may be satisfied by completing and returning the new Part B – Fee(s) Transmittal Form (along with any balance due at the time of submission). Petitioner is advised that the Issue Fee Transmittal Form must be completed and timely submitted to avoid abandonment of the application.*

UNITED STATES PATENT AND TRADEMARK OFFICE

Commissioner for Patents
United States Patent and Trademark Office
P.O. Box 1450
Alexandria, VA 22313-1450
www.uspto.gov

Zilka-Kotab, PC
P.O. Box 721120
San Jose, CA 95172-1120

MAILED
APR 11 2011
OFFICE OF PETITIONS

In re Application of	:	
Eran Werner, et al.	:	
Application No. 11/976,399	:	DECISION ON PETITION
Filed: October 24, 2007	:	TO WITHDRAW
Attorney Docket No. 920-0078US	:	FROM RECORD
	:	

This is a decision on the Request to Withdraw as attorney or agent of record under 37 C.F.R. § 1.36(b), filed February 16, 2011.

The request is **NOT APPROVED** because it is moot.

A review of the file record indicates that the power of attorney to Zilka-Kotab, PC has been revoked by the assignee of the patent application on March 21, 2011. Accordingly, the request to withdraw under 37 C.F.R. § 1.36(b) is moot.

All future communications from the Office will continue to be directed to the below-listed address until otherwise notified by applicant.

Telephone inquires concerning this decision should be directed to Terri Johnson at 571-272-2991.

/Terri Johnson/
Terri Johnson
Petitions Examiner
Office of Petitions

cc: **McAfee-Wong Cabello Lutsch Rutherford & Brocculeri LLP**
20333 Tombali Parkway, 6th Floor
Houston, TX 77070

UNITED STATES PATENT AND TRADEMARK OFFICE

Commissioner for Patents
United States Patent and Trademark Office
P.O. Box 1450
Alexandria, VA 22313-1450
www.uspto.gov

Patent No. : 7682747 B2
Application No.: 11/976491
Inventor(s) : Tsutomu OHZUKU, et al.
Issued : 03/23/2010
Attorney Docket No.: 043888-0611

Re: Request for Certificate of Correction

Consideration has been given your request for the issuance of a certificate of correction for the above-identified patent under the provisions of Rule(s) 1.322 and/or 1.323.

Assignees' names and addresses (assignment data) printed in a patent, are based *solely* on information supplied in the appropriate space for identifying the assignment data, i.e., item 3 of the Issue Fee Transmittal Form PTOL-85B. Granting of a request under 37 CFR 3.81(b) is required to correct applicant's error providing ***incorrect or erroneous*** assignment data, *before* issuance of a Certificate of Correction, under 37 CFR 1.323 *(see Manual of Patent Examining Procedures (M.P.E.P) Chp.1400, sect. 1481).* This procedure is required *at any time after the issue fee is paid*, including after issuance of the patent.

In view of the foregoing, your request, in this matter, is hereby denied.

A request to correct the Assignee under 37 CFR 3.81(b) should include:

A. **the processing fee set forth in 37 CFR 1. 17(i) (currently $130);**
B. a statement that the failure to include the correct assignee name on the PTOL-85B was inadvertent; and
C. a copy of the Notice of Recordation of Assignment Document, reflecting the reel and frame number where the assignment(s) is recorded and/or reflecting proof of *the date* the assignment was submitted for recordation.

In the Request, Applicant(s) may request that the file be forwarded to Certificates of Correction Branch, for issuance of a Certificate of Correction, if the Request is granted.

Any request under 37 CFR 3.81(b) should be directed to the following address or facsimile number:

By mail: Mail Stop PETITIONS
Commissioner for Patents
Post Office Box 1450
Alexandria, VA 22313-1450

By hand: Customer Service Window
Mail Stop Petitions
Randolph Building
401 Dulany Street
Alexandria, VA 22314

By fax: 571-273-0025
ATTN: Office of Petitions

If a fee (currently $100) was previously submitted for consideration of a Request for Certificate of Correction, under CFR 1.323, to correct assignment data, no additional fee is required.

Tasneem Siddiqui
For Mary Diggs (Supervisor)
Decisions & Certificates of Correction Branch
(703) **756-1593** or (703) 756-1814
Date: 07/01/2011

Address: Michael E. Fogarty
McDERMOTT WILL & EMERY LLP
600 13th Street, N.W.
Washington, DC 20005-3096

ts

UNITED STATES PATENT AND TRADEMARK OFFICE

Commissioner for Patents
United States Patent and Trademark Office
P.O. Box 1450
Alexandria, VA 22313-1450
www.uspto.gov

MCDERMOTT WILL & EMERY LLP
600 13TH STREET, N.W.
WASHINGTON DC 20005-3096

MAILED

SEP 07 2011

OFFICE OF PETITIONS

In re Application of	:	
Ohzuku et al.	:	
Application No. 11/976491	:	DECISION
Filing or 371(c) Date: 10/25/2007	:	ON PETITION
Patent No.: 7682747	:	
Issue Date: 03/23/2010	:	
Attorney Docket No.: 043888-0611	:	

This is a decision on the correspondence entitled "Petition to Correct Assignee Under 37 CFR 3.81(b)," filed August 17, 2011, to correct the name of the assignee on the front page of the above-identified patent by way of a Certificate of Correction.

The Petition is **granted**.

The petition was accompanied by a certificate of correction as required by 3.81(b), and the fee submitted with the present petition. Further, Office assignment records reflect that OSAKA CITY UNIVERSITY, is also an assignee of record[1]. As the request complies with the provisions of 37 CFR 3.81(b), it would be appropriate for a certificate of correction to be processed.

Telephone inquiries concerning this matter should be directed to the undersigned at (571) 272-3232. Any questions concerning the issuance of the Certificate of Correction should be directed to the Certificate of Correction Branch at (571) 272-4200.

This matter is being referred to the Certificates of Correction Branch for processing of a certificate of correction after issuance of this application into a patent.

/DLW/

Derek L. Woods
Attorney
Office of Petitions

[1] The present application is a divisional application of 10/333269. In the case of a division or continuation application, a prior assignment recorded against the original application is applied (effective) to the division or continuation application because the assignment recorded against the original application gives the assignee rights to the subject matter common to both applications. MPEP 306.

PTO/SB/44 (09-07)
Approved for use through 08/31/2010. OMB 0651-0033
U.S. Patent and Trademark Office; U.S. DEPARTMENT OF COMMERCE
Under the Paperwork Reduction Act of 1995, no persons are required to respond to a collection of information unless it displays a valid OMB control number.
(Also Form PTO-1050)

UNITED STATES PATENT AND TRADEMARK OFFICE
CERTIFICATE OF CORRECTION

PATENT NO. : 7,734,756

APPLICATION NO.: 11/976,509

ISSUE DATE : June 8, 2010

INVENTOR(S) : Michael Linderman

It is certified that an error appears or errors appear in the above-identified patent and that said Letters Patent is hereby corrected as shown below:

Column 3, line 39, cancel "sill" and insert -- still--.

Column 4, lines 44-45, cancel "the localized web server 20" and insert -- a localized web server 18 --.

Column 5, line 1, cancel "nailing" and insert -- mailing --.

Column 5, line 36, cancel "either" and insert -- other --.

Column 5, line 39, cancel "the".

Column 5, line 40, cancel "the".

Column 6, line 4, cancel "Ids" and insert -- IDs --.

Column 7, line 14, cancel "the web server 20" insert -- web server 20 at Step 7 --.

Column 7, line 16, after "12" insert -- at Step 8 --.

Column 7, line 19, cancel "the web server 20 at Step 2" and insert -- web server 18 at Step 1 --.

Column 7, line 36, after "28" (first occurrence) insert -- at Step 7 --.

Column 10, line 4, cancel "608)nea" and insert -- 608) NEA --.

Column 10, lines 6-7, cancel "the SOAP encoded request is sent from the NMA to the NEA (Step 617). Data" and insert -- data --.

APPROVED: /H.P./ (09/23/2010) OK TO ENTER: /H.P./ (09/23/2010)

/Haresh Patel/ (09/23/2010)

MAILING ADDRESS OF SENDER (Please do not use customer number below):

The Nath Law Group
112 South West St.
Alexandria, VA 22314-2825

This collection of information is required by 37 CFR 1.322, 1.323, and 1.324. The information is required to obtain or retain a benefit by the public which is to file (and by the USPTO to process) an application. Confidentiality is governed by 35 U.S.C. 122 and 37 CFR 1.14. This collection is estimated to take 1.0 hour to complete, including gathering, preparing, and submitting the completed application form to the USPTO. Time will vary depending upon the individual case. Any comments on the amount of time you require to complete this form and/or suggestions for reducing this burden, should be sent to the Chief Information Officer, U.S. Patent and Trademark Office, U.S. Department of Commerce, P.O. Box 1450, Alexandria, VA 22313-1450. DO NOT SEND FEES OR COMPLETED FORMS TO THIS ADDRESS. **SEND TO: Attention Certificate of Corrections Branch, Commissioner for Patents, P.O. Box 1450, Alexandria, VA 22313-1450.**

If you need assistance in completing the form, call 1-800-PTO-9199 and select option 2.

PTO/SB/44 (09-07)
Approved for use through 08/31/2010. OMB 0651-0033
U.S. Patent and Trademark Office; U.S. DEPARTMENT OF COMMERCE
Under the Paperwork Reduction Act of 1995, no persons are required to respond to a collection of information unless it displays a valid OMB control number.
(Also Form PTO-1050)

UNITED STATES PATENT AND TRADEMARK OFFICE
CERTIFICATE OF CORRECTION

PATENT NO. : 7,734,756 B2

APPLICATION NO.: 11/976,509

ISSUE DATE : June 8, 2010

INVENTOR(S) : Michael LINDERMAN

It is certified that an error appears or errors appear in the above-identified patent and that said Letters Patent is hereby corrected as shown below:

Please correct the following on the front page of the patent:

Please delete:
"(63) Continuation of application No. 11/510,760, filed on Aug. 28, 2006, now Pat. No. 7,325,053, which is a continuation of application No. 09/900,041, filed on Jul. 9, 2001, now Pat. No. 7,136,913."

and replace with:
-- (63) Continuation of application No. 11/510,760, filed on Aug. 28, 2006, now Pat. No. 7,325,053, which is a continuation of application No. 09/900,041, filed on Jul. 9, 2001, now Pat. No. 7,136,913, which is a continuation-in-part of application No. 09/867,469, filed on May 31, 2001, now Pat. No. 7,007,094. --

APPROVED: /H.P./ (09/23/2010)

OK TO ENTER: /H.P./ (09/23/2010)

/Haresh Patel/ (09/23/2010)

MAILING ADDRESS OF SENDER (Please do not use customer number below):

THE NATH LAW GROUP
112 S. West Street
Alexandria, VA 22314

This collection of information is required by 37 CFR 1.322, 1.323, and 1.324. The information is required to obtain or retain a benefit by the public which is to file (and by the USPTO to process) an application. Confidentiality is governed by 35 U.S.C. 122 and 37 CFR 1.14. This collection is estimated to take 1.0 hour to complete, including gathering, preparing, and submitting the completed application form to the USPTO. Time will vary depending upon the individual case. Any comments on the amount of time you require to complete this form and/or suggestions for reducing this burden, should be sent to the Chief Information Officer, U.S. Patent and Trademark Office, U.S. Department of Commerce, P.O. Box 1450, Alexandria, VA 22313-1450. DO NOT SEND FEES OR COMPLETED FORMS TO THIS ADDRESS. **SEND TO: Attention Certificate of Corrections Branch, Commissioner for Patents, P.O. Box 1450, Alexandria, VA 22313-1450.**

If you need assistance in completing the form, call 1-800-PTO-9199 and select option 2.

SPE RESPONSE FOR CERTIFICATE OF CORRECTION

DATE : 8/24/10 **Paper No.:** ____

TO SPE OF : ART UNIT 2454

SUBJECT : Request for Certificate of Correction for Appl. No.: 11/976509 Patent No.: 7734256 B2

Please respond to this request for a certificate of correction within 7 days.

FOR IFW FILES:

Please review the requested changes/corrections as shown in the **COCIN** document(s) in the IFW application image. No new matter should be introduced, nor should the scope or meaning of the claims be changed.

Please complete the response (see below) and forward the completed response to scanning using document code **COCX**.

FOR PAPER FILES:

Please review the requested changes/corrections as shown in the attached certificate of correction. Please complete this form (see below) and forward it with the file to:

Certificates of Correction Branch (CofC)
Randolph Square – 9D10-A
Palm Location 7580

Virginia Tolbert
Certificates of Correction Branch
571-272-0460

Thank You For Your Assistance

The request for issuing the above-identified correction(s) is hereby:
Note your decision on the appropriate box.

- ☒ **Approved** — **All** changes apply.
- ☐ **Approved in Part** — Specify below which changes **do not** apply.
- ☐ **Denied** — State the reasons for denial below.

Comments: Approved.

/Nathan J. Flynn/
Nathan j. Flynn
spe 2454

UNITED STATES PATENT AND TRADEMARK OFFICE

Commissioner for Patents
United States Patent and Trademark Office
P.O. Box 1450
Alexandria, VA 22313-1450
www.uspto.gov

Patent No. : 8,027,352 B2
Ser. No. : 11/976,546
Inventor(s) : Noumi et al.
Issued : Sep. 27, 2011
Title : GATEWAY APPARATUS AND DATA MANAGING METHOD
Docket No. : 134447
Re: Request for Certificate of Correction

Consideration has been given your request for the issuance of a certificate of correction for the above-identified patent under the provisions of Rule(s) 1.322 and/or 1.323.

Assignees' names and addresses (assignment data) printed in a patent, are based *solely* on information supplied in the appropriate space for identifying the assignment data, i.e., item 3 of the Issue Fee Transmittal Form PTOL-85B. Granting of a request under 37 CFR 3.81(b) is required to correct applicant's error providing ***incorrect or erroneous*** assignment data, *before* issuance of a Certificate of Correction, under 37 CFR 1.323 *(see Manual of Patent Examining Procedures (M.P.E.P) Chp.1400, sect. 1481).* This procedure is required *at any time after the issue fee is paid*, including after issuance of the patent.

In view of the foregoing, your request, in this matter, is hereby denied.

A request to correct the Assignee under 37 CFR 3.81(b) should include:

A. **the processing fee set forth in 37 CFR 1. 17(i) (currently $130);**
B. a statement that the failure to include the correct assignee name on the PTOL-85B was inadvertent; and
C. a copy of the Notice of Recordation of Assignment Document, reflecting the reel and frame number where the assignment(s) is recorded and/or reflecting proof of *the date* the assignment was submitted for recordation.

In the Request, Applicant(s) may request that the file be forwarded to Certificates of Correction Branch, for issuance of a Certificate of Correction, if the Request is granted.

Any request under 37 CFR 3.81(b) should be directed to the following address or facsimile number:

By mail: Mail Stop PETITIONS
Commissioner for Patents
Post Office Box 1450
Alexandria, VA 22313-1450

By hand: Customer Service Window
Mail Stop Petitions
Randolph Building
401 Dulany Street
Alexandria, VA 22314

By fax: (703) 872-9306
ATTN: Office of Petitions

If a fee (currently $100) was previously submitted for consideration of a Request for Certificate of Correction, under CFR 1.323, to correct assignment data, no additional fee is required.

Ennis Young
For Mary Diggs
Decisions & Certificates
of Correction Branch
(571) **272-3435** or (703) 756-1814

UNITED STATES PATENT AND TRADEMARK OFFICE

Commissioner for Patents
United States Patent and Trademark Office
P.O. Box 1450
Alexandria, VA 22313-1450
www.uspto.gov

Paper No.

MCANDREWS HELD & MALLOY, LTD
500 WEST MADISON STREET
SUITE 3400
CHICAGO IL 60661

MAILED
NOV 05 2010
OFFICE OF PETITIONS

In re Application of	:	
Karaoguz et al.	:	
Application No. 11/976,585	:	ON APPLICATION FOR
Filed: 10/25/2007	:	PATENT TERM ADJUSTMENT
Atty Docket No.	:	
20258US06	:	

This is in response to the "APPLICATION FOR RECONSIDERATION OF THE DETERMINATION OF PATENT TERM ADJSUTMENT UNDER 35 U.S.C. 154(b) ACCOMPANYING THE NOTICE OF ALLOWANCE (37 CFR § 1.705)," filed on August 16, 2010, which is treated as a petition under 37 CFR 1.705(b). Applicants submit that the patent term adjustment to be indicated on the patent should be increased from 201 days to 314 days. Applicants request this correction on the basis that the patent will issue on February 15, 2011.

The instant application for patent term adjustment requests reconsideration of the patent term adjustment as it relates to the Office's failure to issue the patent within 3 years of the filing date, the application for patent term adjustment under 37 CFR 1.705(b) is **DISMISSED as PREMATURE**.

Knowledge of the actual date the patent issues is required to calculate the amount, if any, of additional patent term patentee is entitled to for Office failure to issue the patent within 3 years. See § 1.702(b). The computer will not undertake the § 1.702(b) calculation until the actual date of issuance of the patent has been determined. Likewise, the computer will not calculate any further Office delay under § 1.702(a)(4) or applicant delay under § 1.704(c)(10) until the actual date of issuance of the patent has been determined. As such, the Office can not make a determination on the correctness of the patent term adjustment until the patent has issued.

Requesting reconsideration of the patent term adjustment to be indicated on the patent under 37 CFR 1.705(b) based on the initial determination of patent term adjustment and a projected issuance date of the patent is premature. Accordingly, it is appropriate to dismiss as premature such a request.

Rather than file an application for patent term adjustment under 37 CFR 1.705(b) contesting the 37 CFR 1.702(b) calculation at the time of the mailing of the notice of allowance, applicant is advised that they may wait until the time of the issuance of the patent and file a request for reconsideration of the patent term adjustment pursuant to 37 CFR 1.705(d). As the USPTO does not calculate the amount of time earned pursuant to 37 CFR 1.702(b) until the time of the issuance of the patent, the Office will consider any request for reconsideration of the patent term adjustment due to an error in the calculation of 37 CFR 1.702(b) to be timely if the request for reconsideration is filed within two months of the issuance of the patent. However, as to all other bases for contesting the initial determination of patent term adjustment received with the notice of allowance, applicant must timely file an application for patent term adjustment prior to the payment of the issue fee[1].

The Office acknowledges submission of the $200.00 fee set forth in 37 CFR 1.18(e). No additional fees are required.

Any request for reconsideration of the patent term adjustment indicated on the patent must be timely filed within 2 months after issuance pursuant to 37 CFR 1.705(d) and must include payment of the required fee under 37 CFR 1.18(e).

The Office of Data Management has been advised of this decision. This application is being referred to the Office of Data Management for issuance of the patent.

---

1 For example, if applicant disputes both the calculation of patent term adjustment under 37 CFR 1.702(a)(1) for Office failure to mail a first Office action or notice of allowance not later than fourteen months after the date on which the application was filed and under 37 CFR 1.702(b) for Office failure to issue a patent within three years of the actual filing date of the application, then applicant must still timely file an application for patent term adjustment prior to the payment of the issue fee to contest the calculation of Office delay in issuing a first Office action or notice of allowance. See 37 CFR 1.705(b) and 35 U.S.C. 154(b)(3)(B). A dispute as to the calculation of the §1.702(a)(1) period raised on request for reconsideration of patent term adjustment under 37 CFR 1.705(d) will be dismissed as untimely filed.

Telephone inquiries specific to this decision should be directed to the undersigned at (571) 272-3231.

D Wood

Douglas I. Wood
Senior Petitions Attorney
Office of Petitions

UNITED STATES PATENT AND TRADEMARK OFFICE

Commissioner for Patents
United States Patent and Trademark Office
P.O. Box 1450
Alexandria, VA 22313-1450
www.uspto.gov

MCANDREWS HELD & MALLOY, LTD
500 WEST MADISON STREET
SUITE 3400
CHICAGO IL 60661

MAILED

NOV 15 2010

OFFICE OF PETITIONS

In re Application of	:	
Jeyhan Karaoguz, et al.	:	
Application No. 11/976,585	:	DECISION GRANTING PETITION
Filed: October 25, 2007	:	UNDER 37 CFR 1.313(c)(2)
Attorney Docket No. 20258US06	:	

This is a decision on the renewed petition under 37 CFR 1.313(c)(2), filed November 11, 2010, to withdraw the above-identified application from issue after payment of the issue fee.

The petition is **GRANTED**.

The above-identified application is withdrawn from issue for consideration of a submission under 37 CFR 1.114 (request for continued examination). *See* 37 CFR 1.313(c)(2).

Petitioner is advised that the issue fee paid on November 4, 2010 cannot be refunded. If, however, this application is again allowed, petitioner may request that it be applied towards the issue fee required by the new Notice of Allowance.[1]

Telephone inquiries regarding this decision should be directed to undersigned at (571) 272-1642. All other inquiries regarding the examination or status of this application should be directed to the Technology Center.

This application is being referred to Technology Center AU 2614 for processing of the request for continued examination under 37 CFR 1.114 and for consideration of the concurrently filed amendment.

/AMW/
April M. Wise
Petitions Examiner
Office of Petitions

[1] *The request to apply the issue fee to the new Notice may be satisfied by completing and returning the new Part B – Fee(s) Transmittal Form (along with any balance due at the time of submission). Petitioner is advised that the Issue Fee Transmittal Form must be completed and timely submitted to avoid abandonment of the application.*

UNITED STATES PATENT AND TRADEMARK OFFICE

Commissioner for Patents
United States Patent and Trademark Office
P.O. Box 1450
Alexandria, VA 22313-1450
www.uspto.gov

Muncy, Geissler, Olds & Lowe, PLLC
4000 Legato Road
Suite 310
FAIRFAX VA 22033

MAILED
SEP 23 2010
OFFICE OF PETITIONS

In re Application of	:	
Shun-Yu Wang	:	
Application No. 11/976,594	:	DECISION ON PETITION
Filed: October 25, 2007	:	
Attorney Docket No. 5545/0436PUS1	:	

This is a decision on the petition under the unintentional provisions of 37 CFR 1.137(b), filed July 26, 2010, to revive the above-identified application.

The petition is **GRANTED**.

The application became abandoned for failure to reply in a timely manner to the Notice to File Missing Parts of Non-Provisional Application (Notice), mailed November 21, 2007. The Notice set a period for reply of two (2) months from the mail date of the Notice. No extensions of time under the provisions of 37 CFR 1.136(a) was obtained. Accordingly, the application became abandoned on January 22, 2008. A Notice of Abandonment was mailed July 30, 2008.

The petition satisfies the requirements of 37 CFR 1.137(b) in that petitioner has supplied (1) the reply in the form of an examination fee of $110, a search fee of $270, a basic filing fee of $165, and a surcharge fee of $65 (2) the petition fee of $810, and (3) a proper statement of unintentional delay. Accordingly the fees are accepted as being unintentionally delayed.

It is not apparent whether the person signing the statement of unintentional delay was in a position to have firsthand or direct knowledge of the facts and circumstances of the delay at issue. Nevertheless, such statement is being treated as having been made as the result of a reasonable inquiry into the facts and circumstances of such delay. See 37 CFR 10.18(b) and Changes to Patent Practice and Procedure; Final Rule Notice, 62 Fed. Reg. 53131, 53178 (October 10, 1997), 1203 Off. Gaz. Pat. Office 63, 103 (October 21, 1997). In the event that such an inquiry has not been made, petitioner must make such an inquiry. If such inquiry results in the discovery that it is not correct that the entire delay in filing the required reply from the due date for the reply until the filing of a grantable petition pursuant to 37 CFR 1.137(b) was unintentional, petitioner must notify the Office.

The application file does not indicate a change of address has been filed in this case, although the address given on the petition differs from the address of record. A change of address should be filed in this case in accordance with MPEP 601.03. A courtesy copy of this decision is being mailed to the address noted on the petition. However, until otherwise instructed, all future correspondence regarding this application will be mailed solely to the address of record.

Telephone inquiries regarding this decision should be directed to the Kimberly Inabinet at (571) 272-4618.

This application is being referred to the Office of Patent Application Processing for appropriate action in the normal course of business on the reply received July 26, 2010. Inquires regarding the status of the application should be directed to 571-272-4000.

/Kimberly Inabinet/

Kimberly Inabinet
Petitions Examiner
Office of Petitions

cc: Joe McKinney Muncy
P.O. Box 1364
Fairfax, VA 22038-1364

UNITED STATES PATENT AND TRADEMARK OFFICE

Commissioner for Patents
United States Patent and Trademark Office
P.O. Box 1450
Alexandria, VA 22313-1450
www.uspto.gov

Muncy, Geissler, Olds & Lowe, PLLC
4000 Legato Road
Suite 310
FAIRFAX VA 22033

MAILED

AUG 30 2010

OFFICE OF PETITIONS

In re Application of
Ming-Shun Yu
Application No. 11/976,597
Filing Date: October 25, 2007
Attorney Docket No. **5545/0339PUS1**

DECISION ON PETITION

This is a decision on the petition under the unintentional provisions of 37 CFR 1.137(b), filed August 5, 2010, to revive the above-identified application.

The petition is **GRANTED**.

The application became abandoned for failure to reply in a timely manner to the Notice to File Missing Parts of Provisonal Application (Notice), mailed November 21, 2007. The Notice set a period for reply of two (2) months from the mail date of the Notice. No extensions of time under the provisions of 37 CFR 1.136(a) were obtained. Accordingly, the application became abandoned on January 22, 2008.

The petition satisfies the, requirements of 37 CFR 1.137(b) in that petitioner has supplied (1) the reply in the form of filing fee, search fee, examination fee, and surcharge, (2) the petition fee of $810 (3) a proper statement of unintentional delay.

It is not apparent whether the person signing the statement of unintentional delay was in a position to have firsthand or direct knowledge of the facts and circumstances of the delay at issue. Nevertheless, such statement is being treated as having been made as the result of a reasonable inquiry into the facts and circumstances of such delay. See 37 CFR 10.18(b) and Changes to Patent Practice and Procedure; Final Rule Notice, 62 Fed. Reg. 53131, 53178 (October 10, 1997), 1203 Off. Gaz. Pat. Office 63, 103 (October 21, 1997). In the event that such an inquiry has not been made, petitioner must make such an inquiry. If such inquiry results in the discovery that it is not correct that the entire delay in filing the required reply from the due date for the reply until the filing of a grantable petition pursuant to 37 CFR 1.137(b) was unintentional, petitioner must notify the Office.

Telephone inquiries concerning this decision should be directed to JoAnne Burke at 571-272-4584.

This application is being referred to the Office of Patent Application Processing.

/JoAnne Burke/
JoAnne Burke
Petitions Examiner
Office of Petitions

UNITED STATES PATENT AND TRADEMARK OFFICE

Commissioner for Patents
United States Patent and Trademark Office
P.O. Box 1450
Alexandria, VA 22313-1450
www.uspto.gov

MAILED

APR 06 2011

OFFICE OF PETITIONS

YEN JUNG SUNG
30-47 37 ST.
ASTORIA, NY 11103

In re Application of	:	
FuHsing Tan	:	
Application No. 11/976,600	:	DECISION ON PETITION
Filed: October 25, 2007	:	
Attorney Docket No. Asia-040-US3595	:	

This is a decision on the petition under the unavoidable provisions of 37 CFR 1.137(a), filed July 29, 2010, to revive the above-identified application.

The petition is **DISMISSED.**

The application became abandoned for failure to reply in a timely manner to the Notice to File Missing Parts of Non-provisional Application (Notice), mailed December 11, 2007. The Notice set a period for reply of two (2) months from the mail date of the Notice. No extensions of time under the provisions of 37 CFR 1.136(a) were obtained. Accordingly, the application became abandoned on February 12, 2008.

A grantable petition under 37 CFR 1.137(a) must be accompanied by: (1) the required reply, unless previously filed; (2) the petition fee as set forth in 37 CFR 1.17(l); (3) a showing to the satisfaction of the Director that the entire delay in filing the required reply from the due date for the reply until the filing of a grantable petition pursuant to 37 CFR 1.137(a) was unavoidable; and (4) any terminal disclaimer (and fee as set forth in 37 CFR 1.20(d)) required pursuant to 37 CFR 1.137(d). The instant petition lacks item (1), and (3).

With respect to item 1:

A petition to revive cannot be granted where there is an outstanding requirement. In the instant application the response to the outstanding Office mailed December 11, 2007 was incomplete. While it is noted that petitioner did file a reply to the Notice action mailed December 11, 2007, however, the fees were insufficient. The cost of the examination fee paid was $100. As of September 30, 2008, the fees were increased to $110. Petitioner must pay an additional $10 to make the reply complete.

With respect to item 3:

Petitioner attests that the delay in filing a timely response to the Notice to File Missing Parts of Non-provisional Application was unavoidable due to the action or inaction of Bruce Troxell, the duly authorized and chosen representative of the applicant.

Decisions on reviving abandoned applications on the basis of "unavoidable" delay have adopted the reasonably prudent person standard in determining if the delay was unavoidable:

> The word 'unavoidable' . . . is applicable to ordinary human affairs, and requires no more or greater care or diligence than is generally used and observed by prudent and careful men in relation to their most important business. It permits them in the exercise of this care to rely upon the ordinary and trustworthy agencies of mail and telegraph, worthy and reliable employees, and such other means and instrumentalities as are usually employed in such important business. If unexpectedly, or through the unforeseen fault or imperfection of these agencies and instrumentalities, there occurs a failure, it may properly be said to be unavoidable, all other conditions of promptness in its rectification being present.

In re Mattullath, 38 App. D.C. 497, 514-15 (1912)(quoting *Ex parte Pratt*, 1887 Dec. Comm'r Pat. 31, 32-33 (1887)); see also *Winkler v. Ladd*, 221 F. Supp. 550, 552, 138 USPQ 666, 167-68 (D.D.C. 1963), aff'd, 143 USPQ 172 (D.C. Cir. 1963); *Ex parte Henrich*, 1913 Dec. Comm'r Pat. 139, 141 (1913). In addition, decisions on revival are made on a "case-by-case basis, taking all the facts and circumstances into account." *Smith v. Mossinghoff*, 671 F.2d 533, 538, 213 USPQ 977, 982 (D.C. Cir. 1982). Finally, a petition cannot be granted where a petitioner has failed to meet his or her burden of establishing that the delay was "unavoidable." *Haines v. Quigg*, 673 F. Supp. 314, 316-17, 5 USPQ2d 1130, 1131-32 (N.D. Ind. 1987).

Specifically, petitioner states that Bruce Troxell caused the local agents in Taiwan to believe that this application and others like it, were pending when, in fact the filing fees that had been paid in advance has been misappropriated by Mr. Troxell.

Petitioner has submitted no evidence which indicates that petitioner was misled by Mr. Troxell with respect to the above-identified application. In this regard, petitioner submitted an invoice dated October 25, 2007 along with a transmittal letter from Mr. Troxell indicating that $515 in fees were to be paid to the USPTO. A review of the application shows that a letter from Mr. Troxell stating the filing of the application, however, there is no indication that the application fees were paid.

The record also indicates that Mr. Troxell was responsible for prosecution of the above identified application when the reply necessary to avoid abandonment was due. Therefore, petitioner must provide a statement from Mr. Troxell explaining why action was not timely taken to prevent the above-identified application from becoming abandoned.

Petitioner is advised to send a letter (accompanied by a copy of this decision) to Mr. Troxell, by certified or registered mail (return receipt requested) indicating that the Patent and Trademark Office is requesting assistance in ascertaining the cause of abandonment of the above-identified application, and that the Patent and Trademark Office is request that Mr. Troxell provide within a specified period (e.g., one month) a statement setting forth why appropriate action was not timely taken to prevent abandonment of the above-identified application from becoming abandoned. Petitioner is advised that in the event that Mr. Troxell does not provide such a statement, petitioner should submit a copy of such letter and the return receipt.

The USPTO must rely on the actions or inactions of duly authorized and voluntarily chosen representatives of the applicant, and petitioner is bound by the consequences of those actions or inactions. Link v. Wabash, 370 U.S. 626, 633-34 (1962); Huston v. Ladner, 973 F.2d 1564, 1567, 23 USPQ2d 1910, 1913 (Fed. Cir. 1992); see also Haines v. Quigg, 673 F. Supp. 314, 317, 5 USPQ2d 1130, 1132 (D.N. Ind. 1987); California, supra. Specifically, petitioner's delay caused by the mistakes or omissions of his voluntarily chosen representative does not constitute unavoidable delay within the meaning of 35 USC 133. See Haines v. Quigg, supra; Smith v. Diamond, 209 USPQ 1091 (D.D.C. 1981); Potter v. Dann, 201 USPQ 574 (D.D.C. 1978); Ex parte Murray, 1891 Dec. Comm'r Pat. 130, 131 (Comm'r Pat. 1891).

While the showing of the record is not sufficient to establish to the satisfaction of the Commissioner that the delay was unavoidable, petitioner is not precluded from obtaining relief by filing a petition pursuant to 37 CFR 1.137(b) on the basis of the unintentional delay.

If petitioner cannot provide the evidence necessary to establish unavoidable delay, or simply does not wish to, petitioner may wish to consider filing a petition stating that the delay was unintentional. Public Law 97-247, § 3, 96 Stat. 317 (1982), which revised patent and trademark fees, amended 35 U.S.C. § 41(a)(7) to provide for the revival of an "unintentionally" abandoned application without a showing that the delay in prosecution or in late payment of the issue fee was "unavoidable." This amendment to 35 U.S.C. § 41(a)(7) has been implemented in 37 CFR 1.137(b). An "unintentional" petition under 37 CFR 1.137(b) must be accompanied by the $810 petition fee.

The filing of a petition under 37 CFR 1.137(b) cannot be intentionally delayed and therefore must be filed promptly. A person seeking revival due to unintentional delay cannot make a statement that the delay was unintentional unless the entire delay, including the date it was discovered that the application was abandoned until the filing of the petition to revive under 37 CFR 1.137(b), was unintentional. A statement that the delay was unintentional is not appropriate if petitioner intentionally delayed the filing of a petition for revival under 37 CFR 1.137(b).

Petitioner is reminded that the Patent and Trademark Office is not the proper forum for resolving disputes between applicants and their representatives. See Ray v. Lehman, 55 F.3d 606,34 USPQ2d 1786 (Fed. Cir. 1995).

Any further petition to revive must be submitted within **TWO (2) MONTHS** from the mail date of this decision. Extensions of time under 37 CFR 1.136(a) are permitted. The reconsideration request should include a cover letter entitled "Renewed Petition under 37 CFR 1.137(a)." This is **not** a final agency action within the meaning of 5 U.S.C.§ 704.

Further correspondence with respect to this matter should be addressed as follows:

By Mail: Mail Stop PETITION
Commissioner for Patents
P. O. Box 1450
Alexandria, VA 22313-1450

By hand: U. S. Patent and Trademark Office
Customer Service Window, Mail Stop Petitions
Randolph Building
401 Dulany Street
Alexandria, VA 22314

By facsimile: **(571) 273-8300**
Attn: Office of Petitions

Telephone inquiries concerning this decision should be directed to April M, Wise at (571) 272-1642.

/dab/
David Bucci
Petitions Examiner
Office of Petitions

UNITED STATES PATENT AND TRADEMARK OFFICE

Commissioner for Patents
United States Patent and Trademark Office
P.O. Box 1450
Alexandria, VA 22313-1450
www.uspto.gov

YEN JUNG SUNG
30-47 37 ST.
ASTORIA, NY 11103

MAILED

JUL 05 2011

OFFICE OF PETITIONS

In re Application of :
Fu-Hsing Tan :
Application No. 11/976,600 :
Filed: October 25, 2007 :
Attorney Docket No. Asia-040-US3595 :

ON PETITION

This is a decision on the renewed petition under 37 CFR 1.137(a), filed May 27, 2011, to revive the above-identified application.

The application became abandoned for failure to reply in a timely manner to the Notice to File Missing Parts of Non-provisional Application (Notice), mailed December 11, 2007. The Notice set a period of reply of two months from the mail date of the Notice. No extensions of time under the provisions of 37 CFR 1.136(a) were obtained. Accordingly, the application became abandoned on February 12, 2008.

The petition satisfies the requirements of 37 CFR 1.137(a) in that petitioner has supplied (1) the required reply in the form of the application filing, search and examination fees and the surcharge for the late submission of the filing fee; (2) the petition fee of $270; and (3) a showing to the satisfaction of the Director that the entire delay was unavoidable.

In view of the above, the petition is **GRANTED.**

Telephone inquiries concerning this decision should be directed to April M. Wise at (571) 272-1642. All other inquiries concerning the examination or status of this application should be directed to the Office of Patent Application Processing at their hotline 571-272-4000.

This application is being referred to the Office of Patent Application Processing for pre-examination processing in the normal course of business.

/dab/
David Bucci
Petitions Examiner
Office of Petitions

UNITED STATES PATENT AND TRADEMARK OFFICE

Commissioner for Patents
United States Patent and Trademark Office
P.O. Box 1450
Alexandria, VA 22313-1450
www.uspto.gov

Yen Jung Sung
30-47 37 St.
Astoria NY 11103

MAILED
NOV 22 2010
OFFICE OF PETITIONS

In re Application of :
Lin :
Application No. 11/976,602 : DECISION ON PETITION
Filed: October 25, 2007 :
Attorney Docket No. Asia-042-US3600 :

This is a decision on the petition under the unavoidable provisions of 37 CFR 1.137(a), filed September 17, 2010, to revive the above-identified application.

The petition is **DISMISSED.**

Any further petition to revive must be submitted within TWO (2) MONTHS from the mail date of this decision. Extensions of time under 37 CFR 1.136(a) are permitted. The reconsideration request should include a cover letter entitled "Renewed Petition under 37 CFR 1.137(a)." This is **not** a final agency action within the meaning of 5 U.S.C.§ 704.

This above-identified application became abandoned for failure to file a response to a Notice to File Missing Parts, which was mailed on December 5, 2007. The Notice to File Missing Parts set an extendable two (2) month period for reply. No timely request for extension of time was obtained under the provisions of 37 CFR §1.136(a). Accordingly, this application became abandoned on February 6, 2008. A Notice of Abandonment was mailed August 13, 2008.

Petitioner contends that the above-identified application was unavoidably delayed based on the misrepresentations and omissions by the previous attorney Bruce Troxell. Petitioner states former attorney Troxell caused the local agents in Taiwan to believe the application was pending, when in fact, the filing fees which had been paid in advance had been misappropriated by attorney Troxell.

A grantable petition under 37 CFR 1.137(a) must be accompanied by: (1) the required reply, unless previously filed; (2) the petition fee as set forth in 37 CFR 1.17(l); (3) a showing to the satisfaction of the Director that the entire delay in filing the required reply from the due date for the reply until the filing of a grantable petition pursuant to 37 CFR 1.137(a) was unavoidable; and (4) any terminal disclaimer (and fee as set forth in 37 CFR 1.20(d)) required pursuant to 37 CFR 1.137(d). The instant petition lacks item(s) (1) and (3).

As to item (1), the Office is not in receipt of the complete examination fee of $110.00. On renewed petition $10.00 is required to complete the examination fee.

As to item (3), petitioner has failed to provide sufficient evidence to warrant a finding that the application was unavoidably delayed.

The Office may revive an abandoned application if the delay in responding to the relevant outstanding office requirement is shown to the satisfaction of the Commissioner to have been "unavoidable." See, 37 CFR § 1.137(a)(3). Decisions on reviving abandoned applications have adopted the reasonably prudent person standard in determining if the delay was unavoidable. Ex parte Pratt, 1887 Dec. Comm'r Pat. 31, 32-33 (Comm'r Pat. 1887) (the term "unavoidable" is applicable to ordinary human affairs, and requires no more greater care or diligence than is generally used and observed by prudent and careful men in relation to their most important business."); In re Mattullath, 38 App. D.C. 497, 514-15 (D.C. Cir. 1912); Ex parte Henrich, 1913 Dec. Comm'r Pat. 139, 141 (Comm'r Pat. 1913). In addition, decisions on revival are made on a "case by case basis, taking all the facts and circumstances into account." Smith v. Mossinghoff, 671 F.2d 533, 538, 213 USPQ 977, 982 (D.C. Cir. 1982). A petition to revive an application as unavoidably abandoned cannot be granted where petitioner has failed to meet his or her burden of establishing the cause of the unavoidable delay. Haines v. Quigg, 673 F. Supp. 314, 5 USPQ2D 1130 (N.D. Ind. 1987).

In general, the Office looks to the actions or inactions of duly authorized and voluntarily chosen representatives of the applicant/patentee and their successors, and the applicant/patentee and their successors are bound by the consequences of those actions or inactions. Link v. Wabash, 370 U.S. 626, 633-34 (1962).

In this instance, petitioner contends that the required filing fees were provided to the former attorney of record and the attorney of record acknowledged receipt of the fees and implied that such fees had been submitted to the Office. Petitioner has provided evidence such a copy of the check submitted to attorney Troxell as well as correspondence which acknowledge receipt of the funds. Petitioner has also provided evidence of a status inquiry sent to attorney Troxell.

There are three periods to be considered during the evaluation of a petition under 37 CFR 1.137:

(1) the delay in reply that originally resulted in the abandonment;

(2) the delay in filing an initial petition pursuant to 37 CFR 1.137 to revive the application; and

(3) the delay in filing a grantable petition pursuant to 37 CFR 1.137 to revive the application.

MPEP 711.03(c), subsection II D provides an applicant seeking revival of an abandoned application is advised to file a petition pursuant to 37 CFR 1.137 within 3 months of the first notification that the application is abandoned to avoid the question of intentional delay being

raised by the Office (or by third parties seeking to challenge any patent issuing from the application). Where a petition pursuant to 37 CFR 1.137(a) or (b) is not filed within 3 months of the date the applicant is first notified that the application is abandoned, the Office may consider there to be a question as to whether the delay was unavoidable or unintentional.

In such instances,

(A) the Office will require a showing as to how the delay between the date the applicant was first notified that the application was abandoned and the date a 37 CFR 1.137(a) petition was filed was "unavoidable"; or

(B) the Office may require further information as to the cause of the delay between the date the applicant was first notified that the application was abandoned and the date a 37 CFR 1.137(b) petition was filed, and how such delay was "unintentional."

Petitioner has failed to provide sufficient evidence to establish that the delay in filing the initial petition was unavoidable. Petitioner has failed to specifically state when it was discovered that the application was abandoned. The declaration submitted by Hsueh-Szu Lu , merely states "it has only recently come to the attention...this case became abandoned for failure to pay the filing fees". As such the Office is unable to make a determination that the filing of the petition over two years from the date of abandonment was unavoidable.

As such petitioner has failed to establish the entire delay in filing the required reply from the due date for the reply until the filing of a grantable petition pursuant to 37 CFR 1.137(a) was unavoidable.

The file does not indicate a change of address has been submitted, although the address given on the petition differs from the address of record. If appropriate, a change of address should be filed in accordance with MPEP 601.03. A courtesy copy of this decision is being mailed to the address given on the petition; however, the Office will mail all future correspondence solely to the address of record.

If petitioner cannot provide the evidence necessary to establish unavoidable delay, or simply does not wish to, petitioner may wish to consider filing a petition stating that the delay was unintentional. Public Law 97-247, § 3, 96 Stat. 317 (1982), which revised patent and trademark fees, amended 35 U.S.C. § 41(a)(7) to provide for the revival of an "unintentionally" abandoned application without a showing that the delay in prosecution or in late payment of the issue fee was "unavoidable." This amendment to 35 U.S.C. § 41(a)(7) has been implemented in 37 CFR 1.137(b). An "unintentional" petition under 37 CFR 1.137(b) must be accompanied by the $810 petition fee.

The filing of a petition under 37 CFR 1.137(b) cannot be intentionally delayed and therefore must be filed promptly. A person seeking revival due to unintentional delay cannot make a statement that the delay was unintentional unless the entire delay, including the date it was discovered that the application was abandoned until the filing of the petition to revive under 37

CFR 1.137(b), was unintentional. A statement that the delay was unintentional is not appropriate if petitioner intentionally delayed the filing of a petition for revival under 37 CFR 1.137(b).

Further correspondence with respect to this matter should be addressed as follows:

By Mail: Mail Stop PETITION
Commissioner for Patents
P. O. Box 1450
Alexandria, VA 22313-1450

By hand: U. S. Patent and Trademark Office
Customer Service Window, Mail Stop Petitions
Randolph Building
401 Dulany Street
Alexandria, VA 22314

By facsimile: **(571) 273-8300**
Attn: Office of Petitions

Telephone inquiries concerning this decision should be directed to the undersigned at (571) 272-3215.

Charlema Grant
Petitions Attorney
Office of Petitions

Cc: Yen Jung Sung
2180 38 ST. # C8
Astoria, NY 11105

UNITED STATES PATENT AND TRADEMARK OFFICE

Commissioner for Patents
United States Patent and Trademark Office
P.O. Box 1450
Alexandria, VA 22313-1450
www.uspto.gov

Yen Jung Sung
30-47 37 St.
Astoria NY 11103

MAILED

FEB 22 2011

OFFICE OF PETITIONS

In re Application of :
Lin :
Application No. 11/976,602 :
Filed: October 25, 2007 :
Attorney Docket No. Asia-042-US3600 :

ON PETITION

This is a decision on the renewed petition under 37 CFR 1.137 (a), filed December 20, 2010, to revive the above-identified application.

The petition is **GRANTED.**

This above-identified application became abandoned for failure to file a response to a Notice to File Missing Parts, which was mailed on December 5, 2007. The Notice to File Missing Parts set an extendable two (2) month period for reply. No timely request for extension of time was obtained under the provisions of 37 CFR §1.136(a). Accordingly, this application became abandoned on February 6, 2008. A Notice of Abandonment was mailed August 13, 2008.. A petition filed under 37 CFR 1.137(a) was dismissed on November 22, 2010.

The petition satisfies the requirements of 37 CFR 1.137(a) in that petitioner has supplied (1) the required reply in the form of filing fees (2) the petition fee of $270.00; and (3) a showing to the satisfaction of the Director that the entire delay was unavoidable.

This application is being referred to the Office of Patent Application Processing for processing in the normal course of business.

Telephone inquiries concerning this decision should be directed to the undersigned at (571) 272-3215.

Charlema Grant
Petitions Attorney
Office of Petitions

UNITED STATES PATENT AND TRADEMARK OFFICE

Commissioner for Patents
United States Patent and Trademark Office
P.O. Box 1450
Alexandria, VA 22313-1450
www.uspto.gov

LEVEL 3 COMMUNICATIONS, LLC
C/O CPA GLOBAL
P.O. BOX 52050
MINNEAPOLIS, MN 55402

MAILED
AUG 26 2010
OFFICE OF PETITIONS

In re Application of :
Paul E. Stolorz et al :
Application No. 11/976,648 : ON PETITION
Filed: October 26, 2007 :
Attorney Docket No. 0093-US-I1

This is a decision on the petition, filed August 24, 2010 under 37 CFR 1.313(c)(2) to withdraw the above-identified application from issue after payment of the issue fee.

The petition is **GRANTED**.

The above-identified application is withdrawn from issue for consideration of a submission under 37 CFR 1.114 (request for continued examination). See 37 CFR 1.313(c)(2).

Petitioner is advised that the issue fee paid on July 9, 2010 in the above-identified application cannot be refunded. If, however, the above-identified application is again allowed, petitioner may request that it be applied towards the issue fee required by the new Notice of Allowance.[1]

The file does not indicate a change of address has been submitted, although the address given on the petition differs from the address of record. If appropriate, a change of address should be filed in accordance with MPEP 601.03. A courtesy copy of this decision is being mailed to the address given on the petition; however, the Office will mail all future correspondence solely to the address of record.

Telephone inquiries should be directed to Irvin Dingle at (571) 272-3210.

This matter is being referred to Technology Center AU 2451 for processing of the request for continued examination under 37 CFR 1.114 and for consideration of the concurrently filed Information Disclosure Statement.

/Irvin Dingle/
Irvin Dingle
Petitions Examiner
Office of Petitions

cc: Brian Siritzky
Davidson, Berquist, Jackson & Gowdey LLP
4300 Wilson Blvd., 7th Floor
Arlington, VA 22203

---

[1] The request to apply the issue fee to the new Notice may be satisfied by completing and returning the new Issue Fee Transmittal Form PTOL-85(b), which includes the following language thereon: Commissioner for Patents is requested to apply the Issue Fee and Publication Fee (if any) or re-apply any previously paid issue fee to the application identified above. Petitioner is advised that, whether a fee is indicated as being due or not, the Issue Fee Transmittal Form **must** be completed and timely submitted to avoid abandonment. Note the language in bold text on the first page of the Notice of Allowance and Fee(s) Due (PTOL-85).

UNITED STATES PATENT AND TRADEMARK OFFICE

Commissioner for Patents
United States Patent and Trademark Office
P.O. Box 1450
Alexandria, VA 22313-1450
www.uspto.gov
DIW Oct-10

LEVEL 3 COMMUNICATIONS, LLC
C/O CPA GLOBAL
P.O. BOX 52050
MINNEAPOLIS MN 55402

MAILED
OCT 06 2010
OFFICE OF PETITIONS

In re Application of	:	
Stolorz et al.	:	
Application Number: 11/976,648	:	ON PETITION
Filing Date: 10/26/2007	:	
Attorney Docket Number: 0093-US-I1	:	

This is a decision in reference to the petition filed on July 9, 2010 which are treated as (a) a petition under 37 CFR 1.48(a)(1) requesting a person be added as a named inventor and (b) a petition under 37 CFR 1.183 requesting waiver of 37 CFR 1.64 which requires that a named inventor execute a supplemental declaration.

The petition is **GRANTED**.

On October 26, 2007, the above-identified application was filed with a declaration naming Paul E. Stolorz, John K. Salmon, Michael S. Warren, Jeffrey Koller, Aric Hagberg, Maksim Yevmenkin, Mark Brady, and David Pfitzner as joint inventors.

On July 9, 2010, the subject petitions were filed. Petitioners request that Ted Middleton be added as a named inventor under 37 CFR 1.48(a)(1). Petitioners also request waiver under 37 CFR 1.183 of 1.64 in that two named inventors, Stolorz and Hagberg, refuse to execute the supplemental declaration naming them as joint inventors.

Specifically, petitioners have shown that the application and new declaration were sent on two occasions to inventors Stolorz and Hagberg, but they have failed to sign and return the declarations

naming the original inventors and Ted Middleton as joint inventors.

Petition Under 37 CFR 1.48(a).

37 CFR 1.48(a) requires that an amendment to the named inventive entity be accompanied by:

(1) a petition including a statement from each person being added and each person being deleted as an inventor that the error occurred without deceptive intention on his or her part;

(2) an oath or declaration by each actual inventor or inventors as required by 37 CFR 1.63 or as permitted by 37 CFR 1.42, 1.43 or 1.47;

(3) the fee set forth in 37 CFR 1.17(i), and

(4) the written consent of any existing assignee, if any of the originally named inventors has executed an assignment.

As such, the petition under 37 CFR 1.48 is granted with respect to the addition of Ted Middleton as a named inventor.

Petition Under 37 CFR 1.183 to waive 1.64.

In view of the efforts recounted in the petition to obtain the signatures of Paul E. Stolorz and Aric Hagberg, it is agreed that justice would be served by waiving the requirement for their signatures on the supplemental declaration.

The inventorship will be as stated in the attached corrected filing receipt.

The address in the petition is different than the correspondence address. A courtesy copy of this decision is being mailed to the address in the petition. All future correspondence will be mailed solely to the address of record. A change of correspondence address should be filed if the correspondence address needs to be updated.

The application is referred to Technology Center Art Unit 2451 for further processing.

Telephone inquiries related to this decision should be directed to the undersigned at 571-272-3231.

D Wood

Douglas I. Wood
Senior Petitions Attorney
Office of Petitions

Encl: Corrected Filing Receipt

Cc: DAVIDSON BERQUIST JACKSON & GOWDEY LLP
4300 WILSON BLVD, 7TH FLOOR
ARLINGTON VA 22203

UNITED STATES PATENT AND TRADEMARK OFFICE

UNITED STATES DEPARTMENT OF COMMERCE
United States Patent and Trademark Office
Address: COMMISSIONER FOR PATENTS
P.O. Box 1450
Alexandria, Virginia 22313-1450
www.uspto.gov

APPLICATION NUMBER	FILING or 371(c) DATE	GRP ART UNIT	FIL FEE REC'D	ATTY.DOCKET.NO	TOT CLAIMS	IND CLAIMS
11/976,648	10/26/2007	2451	2000	0093-US-I1	25	5

CONFIRMATION NO. 2828

CORRECTED FILING RECEIPT

83579
LEVEL 3 COMMUNICATIONS, LLC
c/o CPA Global
P.O. Box 52050
Minneapolis, MN 55402

OC000000043816927

Date Mailed: 10/06/2010

Receipt is acknowledged of this non-provisional patent application. The application will be taken up for examination in due course. Applicant will be notified as to the results of the examination. Any correspondence concerning the application must include the following identification information: the U.S. APPLICATION NUMBER, FILING DATE, NAME OF APPLICANT, and TITLE OF INVENTION. Fees transmitted by check or draft are subject to collection. Please verify the accuracy of the data presented on this receipt. **If an error is noted on this Filing Receipt, please submit a written request for a Filing Receipt Correction. Please provide a copy of this Filing Receipt with the changes noted thereon. If you received a "Notice to File Missing Parts" for this application, please submit any corrections to this Filing Receipt with your reply to the Notice. When the USPTO processes the reply to the Notice, the USPTO will generate another Filing Receipt incorporating the requested corrections**

Applicant(s)

Paul E. Stolorz, Thousand Oaks, CA;
John K. Salmon, Altadena, CA;
Michael S. Warren, Santa Fe, NM;
Jeffrey Koller, Torrance, CA;
Aric Hagberg, Santa Fe, NM;
Maksim Yevmenkin, Thousand Oaks, CA;
Mark Brady, Thousand Oaks, CA;
David Pfitzner, Thousand Oaks, CA;
Ted Middleton; Moorpark, CA;

Assignment For Published Patent Application

Level 3 Communications, LLC, Broomfield, CO

Power of Attorney: The patent practitioners associated with Customer Number 42624

Domestic Priority data as claimed by applicant

This application is a CIP of 10/259,497 09/30/2002
which claims benefit of 60/325,177 09/28/2001

Foreign Applications

If Required, Foreign Filing License Granted: 11/23/2007

The country code and number of your priority application, to be used for filing abroad under the Paris Convention, is **US 11/976,648**

Projected Publication Date: Not Applicable

Non-Publication Request: No

Early Publication Request: Yes
Title

POLICY-BASED CONTENT DELIVERY NETWORK SELECTION

Preliminary Class

709

PROTECTING YOUR INVENTION OUTSIDE THE UNITED STATES

Since the rights granted by a U.S. patent extend only throughout the territory of the United States and have no effect in a foreign country, an inventor who wishes patent protection in another country must apply for a patent in a specific country or in regional patent offices. Applicants may wish to consider the filing of an international application under the Patent Cooperation Treaty (PCT). An international (PCT) application generally has the same effect as a regular national patent application in each PCT-member country. The PCT process **simplifies** the filing of patent applications on the same invention in member countries, but **does not result** in a grant of "an international patent" and does not eliminate the need of applicants to file additional documents and fees in countries where patent protection is desired.

Almost every country has its own patent law, and a person desiring a patent in a particular country must make an application for patent in that country in accordance with its particular laws. Since the laws of many countries differ in various respects from the patent law of the United States, applicants are advised to seek guidance from specific foreign countries to ensure that patent rights are not lost prematurely.

Applicants also are advised that in the case of inventions made in the United States, the Director of the USPTO must issue a license before applicants can apply for a patent in a foreign country. The filing of a U.S. patent application serves as a request for a foreign filing license. The application's filing receipt contains further information and guidance as to the status of applicant's license for foreign filing.

Applicants may wish to consult the USPTO booklet, "General Information Concerning Patents" (specifically, the section entitled "Treaties and Foreign Patents") for more information on timeframes and deadlines for filing foreign patent applications. The guide is available either by contacting the USPTO Contact Center at 800-786-9199, or it can be viewed on the USPTO website at http://www.uspto.gov/web/offices/pac/doc/general/index.html.

For information on preventing theft of your intellectual property (patents, trademarks and copyrights), you may wish to consult the U.S. Government website, http://www.stopfakes.gov. Part of a Department of Commerce initiative, this website includes self-help "toolkits" giving innovators guidance on how to protect intellectual property in specific countries such as China, Korea and Mexico. For questions regarding patent enforcement issues, applicants may call the U.S. Government hotline at 1-866-999-HALT (1-866-999-4158).

LICENSE FOR FOREIGN FILING UNDER

Title 35, United States Code, Section 184

Title 37, Code of Federal Regulations, 5.11 & 5.15

GRANTED

The applicant has been granted a license under 35 U.S.C. 184, if the phrase "IF REQUIRED, FOREIGN FILING LICENSE GRANTED" followed by a date appears on this form. Such licenses are issued in all applications where

the conditions for issuance of a license have been met, regardless of whether or not a license may be required as set forth in 37 CFR 5.15. The scope and limitations of this license are set forth in 37 CFR 5.15(a) unless an earlier license has been issued under 37 CFR 5.15(b). The license is subject to revocation upon written notification. The date indicated is the effective date of the license, unless an earlier license of similar scope has been granted under 37 CFR 5.13 or 5.14.

This license is to be retained by the licensee and may be used at any time on or after the effective date thereof unless it is revoked. This license is automatically transferred to any related applications(s) filed under 37 CFR 1.53(d). This license is not retroactive.

The grant of a license does not in any way lessen the responsibility of a licensee for the security of the subject matter as imposed by any Government contract or the provisions of existing laws relating to espionage and the national security or the export of technical data. Licensees should apprise themselves of current regulations especially with respect to certain countries, of other agencies, particularly the Office of Defense Trade Controls, Department of State (with respect to Arms, Munitions and Implements of War (22 CFR 121-128)); the Bureau of Industry and Security, Department of Commerce (15 CFR parts 730-774); the Office of Foreign AssetsControl, Department of Treasury (31 CFR Parts 500+) and the Department of Energy.

NOT GRANTED

No license under 35 U.S.C. 184 has been granted at this time, if the phrase "IF REQUIRED, FOREIGN FILING LICENSE GRANTED" DOES NOT appear on this form. Applicant may still petition for a license under 37 CFR 5.12, if a license is desired before the expiration of 6 months from the filing date of the application. If 6 months has lapsed from the filing date of this application and the licensee has not received any indication of a secrecy order under 35 U.S.C. 181, the licensee may foreign file the application pursuant to 37 CFR 5.15(b).

UNITED STATES PATENT AND TRADEMARK OFFICE

Commissioner for Patents
United States Patent and Trademark Office
P.O. Box 1450
Alexandria, VA 22313-1450
www.uspto.gov

MAILED

AUG 3 0 2010

OFFICE OF PETITIONS

MCDERMOTT WILL & EMERY LLP
600 13TH STREET, N.W.
WASHINGTON DC 2005-3096

In re Application of	:	
Akihiro ASADA et al	:	
Application No. 11/976,670	:	DECISION ON PETITION
Filed: October 26, 2007	:	
Attorney Docket No. 062807-0474	:	

This is a decision on the petition filed August 19, 2009, requesting under 37 CFR 1.182, that the acceptance of the terminal disclaimer filed March 16, 2009 be withdrawn and a corrected terminal disclaimer filed herewith be accepted.

The petition is **GRANTED**.

Petitioners assert that, the terminal disclaimer filed March 16, 2009 incorrectly identified the owner of patent 7,570,565 as HITACHI, LTD., and HITACHI MEDIA ELECTRONICS CO., LTD. A reference was made to petitioner's parent case having a recordation at Reel/Frame 013667/0247.

This application claims priority as a continuing application to application number 10/281,274, now U.S. Patent No. 7,038,989. In the case of a continuing application a prior assignment recorded against the original application is effective to the continuing application. Hence the petition is granted. Although the assignment recorded against an original application is applied to the divisional or continuing application, the Office's assignment records will only reflect an assignment of a divisional or continuing application if a request for recordation in compliance with 37 CFR 3.28, accompanied by the require fee (37 FR 3.41), is filed.

There is no indication that the person signing the petition was ever given a power of attorney to prosecute the application. If the person signing the petition desires to receive future correspondence regarding this application, the appropriate power of attorney documents must be submitted.

Telephone inquiries related to this decision should be addressed to the undersigned at (571) –272-0602.

Thurman K. Page
Petitions Examiner
Office of Petitions

UNITED STATES PATENT AND TRADEMARK OFFICE

Commissioner for Patents
United States Patent and Trademark Office
P.O. Box 1450
Alexandria, VA 22313-1450
www.uspto.gov

SINORICA, LLC
19785 Crystal Rock Drive
Suite 207
Germantown MD 20874

MAILED
MAR 22 2012
OFFICE OF PETITIONS

In re Application of :
Sen-Yu :
Application No. 11/976,726 :
Filed: October 26, 2007 :
Attorney Docket No. TW-EHA-0649 :

ON PETITION

This is a decision on the petition under 37 CFR 1.137 (a), filed February 19, 2012, to revive the above-identified application.

The petition is **GRANTED.**

This above-identified application became abandoned for failure to timely file a reply to the non-final Office Action of August 7, 2010. The non-final Office Action set a three (3) month shortened statutory period for reply. No extension of time was obtained under the provisions of 37 CFR §1.136(a). Accordingly, this application became abandoned on November 8, 2010. A Notice of Abandonment was mailed on March 22, 2011.

The petition satisfies the requirements of 37 CFR 1.137(a) in that petitioner has supplied (1) the required reply in the form of an amendment and replacement drawings (2) the petition fee of $310.00; and (3) a showing to the satisfaction of the Director that the entire delay was unavoidable.

This application is being referred to Art Unit 3743 for processing of the reply submitted with the petition.

Telephone inquiries concerning this decision should be directed to the undersigned at (571) 272-3215.

Charlema Grant

Charlema Grant
Attorney Advisor
Office of Petitions

UNITED STATES PATENT AND TRADEMARK OFFICE

Commissioner for Patents
United States Patent and Trademark Office
P.O. Box 1450
Alexandria, VA 22313-1450
www.uspto.gov

Muncy, Geissler, Olds & Lowe, PLLC
4000 Legato Road
Suite 310
FAIRFAX VA 22033

MAILED
AUG 30 2010
OFFICE OF PETITIONS

In re Application of	:	
Hsien-Rong Liang	:	
Application No. 11/976,727	:	DECISION ON PETITION
Filed: October 26, 2007	:	
Attorney Docket No. 5545/0280PUS1	:	

This is a decision on the petition under the unintentional provisions of 37 CFR 1.137(b), filed July 8, 2010, to revive the above-identified application.

The petition is **GRANTED**.

The application became abandoned for failure to reply in a timely manner to the Notice to File Missing Parts of Non-Provisional Application (Notice), mailed December 7, 2007. The Notice set a period for reply of two (2) months from the mail date of the Notice. No extensions of time under the provisions of 37 CFR 1.136(a) was obtained. Accordingly, the application became abandoned on March 8, 2008. A Notice of Abandonment was mailed August 18, 2008.

The petition satisfies the requirements of 37 CFR 1.137(b) in that petitioner has supplied (1) the reply in the form of an examination fee of $110, a search fee of $270, a basic filing fee of $165, and a surcharge fee of $65 (2) the petition fee of $810, and (3) a proper statement of unintentional delay. Accordingly the fees are accepted as being unintentionally delayed.

It is not apparent whether the person signing the statement of unintentional delay was in a position to have firsthand or direct knowledge of the facts and circumstances of the delay at issue. Nevertheless, such statement is being treated as having been made as the result of a reasonable inquiry into the facts and circumstances of such delay. See 37 CFR 10.18(b) and Changes to Patent Practice and Procedure; Final Rule Notice, 62 Fed. Reg. 53131, 53178 (October 10, 1997), 1203 Off. Gaz. Pat. Office 63, 103 (October 21, 1997). In the event that such an inquiry has not been made, petitioner must make such an inquiry. If such inquiry results in the discovery that it is not correct that the entire delay in filing the required reply from the due date for the reply until the filing of a grantable petition pursuant to 37 CFR 1.137(b) was unintentional, petitioner must notify the Office.

The application file does not indicate a change of address has been filed in this case, although the address given on the petition differs from the address of record. A change of address should be filed in this case in accordance with MPEP 601.03. A courtesy copy of this decision is being mailed to the address noted on the petition. However, until otherwise instructed, all future correspondence regarding this application will be mailed solely to the address of record.

Telephone inquiries regarding this decision should be directed to the Kimberly Inabinet at (571) 272-4618.

This application is being referred to the Office of Patent Application Processing for appropriate action in the normal course of business on the reply received July 8, 2010. Inquires regarding the status of the application should be directed to 571-272-4000.

/Kimberly Inabinet/

Kimberly Inabinet
Petitions Examiner
Office of Petitions

cc: Joe McKinney Muncy
P.O. Box 1364
Fairfax, VA 22038-1364

UNITED STATES PATENT AND TRADEMARK OFFICE

Commissioner for Patents
United States Patent and Trademark Office
P.O. Box 1450
Alexandria, VA 22313-1450
www.uspto.gov

Muncy, Geissler, Olds & Lowe, PLLC
4000 Legato Road
Suite 310
FAIRFAX VA 22033

MAILED

AUG 27 2010

OFFICE OF PETITIONS

In re Application of :
Hsien-Rong Liang :
Application No. 11/976,728 : DECISION ON PETITION
Filed: October 26, 2007 :
Attorney Docket No. 5545/0281PUS1 :

This is a decision on the petition under the unintentional provisions of 37 CFR 1.137(b), filed July 8, 2010, to revive the above-identified application.

The petition is **GRANTED**.

The application became abandoned for failure to reply in a timely manner to the Notice to File Missing Parts of Non-Provisional Application (Notice), mailed November 26, 2007. The Notice set a period for reply of two (2) months from the mail date of the Notice. No extensions of time under the provisions of 37 CFR 1.136(a) was obtained. Accordingly, the application became abandoned on February 27, 2008. A Notice of Abandonment was mailed August 6, 2008.

The petition satisfies the requirements of 37 CFR 1.137(b) in that petitioner has supplied (1) the reply in the form of an examination fee of $110, a search fee of $270, a basic filing fee of $165, and a surcharge fee of $65 (2) the petition fee of $810, and (3) a proper statement of unintentional delay. Accordingly the fees are accepted as being unintentionally delayed.

It is not apparent whether the person signing the statement of unintentional delay was in a position to have firsthand or direct knowledge of the facts and circumstances of the delay at issue. Nevertheless, such statement is being treated as having been made as the result of a reasonable inquiry into the facts and circumstances of such delay. See 37 CFR 10.18(b) and Changes to Patent Practice and Procedure; Final Rule Notice, 62 Fed. Reg. 53131, 53178 (October 10, 1997), 1203 Off. Gaz. Pat. Office 63, 103 (October 21, 1997). In the event that such an inquiry has not been made, petitioner must make such an inquiry. If such inquiry results in the discovery that it is not correct that the entire delay in filing the required reply from the due date for the reply until the filing of a grantable petition pursuant to 37 CFR 1.137(b) was unintentional, petitioner must notify the Office.

The application file does not indicate a change of address has been filed in this case, although the address given on the petition differs from the address of record. A change of address should be filed in this case in accordance with MPEP 601.03. A courtesy copy of this decision is being mailed to the address noted on the petition. However, until otherwise instructed, all future correspondence regarding this application will be mailed solely to the address of record.

Telephone inquiries regarding this decision should be directed to the Kimberly Inabinet at (571) 272-4618.

This application is being referred to the Office of Patent Application Processing for appropriate action in the normal course of business on the reply received July 8, 2010. Inquires regarding the status of the application should be directed to 571-272-4000.

/Kimberly Inabinet/

Kimberly Inabinet
Petitions Examiner
Office of Petitions

cc: Joe McKinney Muncy
P.O. Box 1364
Fairfax, VA 22038-1364

UNITED STATES PATENT AND TRADEMARK OFFICE

Commissioner for Patents
United States Patent and Trademark Office
P.O. Box 1450
Alexandria, VA 22313-1450
www.uspto.gov

STAAS & HALSEY LLP
SUITE 700
1201 NEW YORK AVENUE, N.W.
WASHINGTON DC 20005

MAILED
DEC 30 2011
OFFICE OF PETITIONS

In re Application of :

Choi, et al. :

Application No. 11/976,759 : ON PETITION

Filed: October 26, 2007 :

Attorney Docket No. **1901.1222**

This is a decision on the petition to withdraw the holding of abandonment under 37 CFR 1.181(a), filed December 14, 2011.

The petition is **granted**.

This application was held abandoned July 14, 2011, after no reply was received to the non-final Office action mailed April 13, 2011, which set forth a shortened statutory period of reply of three months from its mailing date. No response was received within the allowable period and the application became abandoned on July 14, 2011. A Notice of Abandonment was mailed November 21, 2011.

When, as in this case petitioner is arguing that an Office communication was not received, petitioner must establish non-receipt of the Office communication in accordance with section 711.03(c) of the *Manual of Patent Examining Procedure* that requires the following:

> To minimize costs and burdens to practitioners and the Office, the Office has modified the showing required to establish nonreceipt of an Office action. The showing required to establish nonreceipt of an Office communication must include a statement from the practitioner describing the system used for recording an Office action received at the correspondence address of record with the USPTO. The statement should establish that the docketing system is sufficiently reliable. It is expected that the record would include, but not be limited to, the application number, attorney docket number, the mail date of the Office action and the due date for the response.
>
> Practitioner must state that the Office action was not received at the correspondence address of record, and that a search of the practitioner's record(s), including any file jacket or the equivalent, and the application contents, indicates that the Office action was not received. A copy of the record(s) used by the practitioner where the non-received Office action would have been entered had it been received is required.

> A copy of the practitioner's record(s) required to show non-receipt of the Office action should include the master docket for the firm. That is, if a three month period for reply was set in the nonreceived Office action, a copy of the master docket report showing all replies docketed for a date three months from the mail date of the nonreceived Office action must be submitted as documentary proof of nonreceipt of the Office action. If no such master docket exists, the practitioner should so state and provide other evidence such as, but not limited to, the following: the application file jacket; incoming mail log; calendar; reminder system; or the individual docket record for the application in question.

Petitioner has met the burden of proof as established by Section 711.03(c)(II) of the MPEP. The holding of abandonment is, therefore, withdrawn.

The application is being directed to Technology Center, GAU 2196 for further processing including mailing of the non-final Office action and resetting of the period for reply thereto.

Questions concerning this decision should be directed to the undersigned at (571) 272-3222.

/Kenya A. McLaughlin/

Kenya A. McLaughlin
Petitions Attorney
Office of Petitions

UNITED STATES PATENT AND TRADEMARK OFFICE

UNITED STATES DEPARTMENT OF COMMERCE
United States Patent and Trademark Office
Address: COMMISSIONER FOR PATENTS
P.O. Box 1450
Alexandria, Virginia 22313-1450
www.uspto.gov

APPLICATION NO.	FILING DATE	FIRST NAMED INVENTOR	ATTORNEY DOCKET NO.	CONFIRMATION NO.
11/976,816	10/29/2007	Hitoshi Kato	008312-0366233	3478

7590 10/12/2010
PILLSBURY WINTHROP SHAW PITTMAN, LLP
P.O. BOX 10500
MCLEAN, VA 22102

EXAMINER
MATAR, AHMAD

ART UNIT	PAPER NUMBER
2614	

MAIL DATE	DELIVERY MODE
10/12/2010	PAPER

DECISION GRANTING PETITION UNDER 37 CFR 1.138(d)

The declaration of express abandonment is recognized

This is in response to the petition under 37 CFR 1.138(d), requesting for a refund of any previously paid search fee and excess claims fee in the above-identified application.

The petition is granted.

The express abandonment is recognized. Any previously paid search fee and excess claims fee are hereby refunded.

Telephone inquiries should be directed to the Office of Data Management at (571) 272-4200.

Patent Publication Branch
Office of Data Management

FORM PET651G (Rev. 08/07)

UNITED STATES PATENT AND TRADEMARK OFFICE

Commissioner for Patents
United States Patent and Trademark Office
P.O. Box 1450
Alexandria, VA 22313-1450
www.uspto.gov

BIRCH STEWART KOLASCH & BIRCH
PO BOX 747
FALLS CHURCH VA 22040-0747

MAILED
DEC 06 2010
OFFICE OF PETITIONS

In re Application of	:	
Yuang-Cheng Chung	:	DECISION ON PETITION
Application No. 11/976,868	:	TO WITHDRAW
Filed: October 29, 2007	:	FROM RECORD
Attorney Docket No. **4989-0161PUS1**	:	

This is a decision on the request to withdraw as attorney of record under 37 CFR § 1.36, filed November 23, 2010.

The request is **APPROVED**.

A grantable request to withdraw as attorney/agent of record must be signed by every attorney/agent seeking to withdraw or contain a clear indication that one attorney is signing on behalf of another/others. The Office requires the practitioner(s) requesting withdrawal to certify that he, she, or they have: (1) given reasonable notice to the client, prior to the expiration of the response period, that the practitioner(s) intends to withdraw from employment; (2) delivered to the client or a duly authorized representative of the client all papers and property (including funds) to which the client is entitled; and (3) notified the client of any responses that may be due and the time frame within which the client must respond , pursuant to 37 CFR 10.40.

The request was signed by Gerald M. Murphy, Jr. on behalf of all attorneys of record who are associated with Customer Number 02292.

All attorneys/agents associated with Customer Number 02292 have been withdrawn.

Applicant is reminded that there is no attorney of record at this time.

The correspondence address of record has been changed and all future correspondence will be directed to the first named inventor Yuang-Cheng Chung at the address indicated below.

There is an outstanding Office action mailed September 3, 2010, that requires a reply from the applicant.

Telephone inquiries concerning this decision should be directed to the undersigned at 571-272-4584.

/JoAnne Burke/
JoAnne Burke
Petitions Examiner
Office of Petitions

cc: Yuang-Chen Chung
No. 73, Sec.2, Fullin Road
Qionglin Shiang
Hsinchu County 307, Taiwan, (R.O.C.)

UNITED STATES PATENT AND TRADEMARK OFFICE

Commissioner for Patents
United States Patent and Trademark Office
P.O. Box 1450
Alexandria, VA 22313-1450
www.uspto.gov

BIRCH STEWART KOLASCH & BIRCH
PO BOX 747
FALLS CHURCH, VA 22040-0747

MAILED
DEC 27 2010
OFFICE OF PETITIONS

In re Application of	:	
Chu et al.	:	DECISION ON PETITION
Application No. 11/976,876	:	TO WITHDRAW
Filed: October 29, 2007	:	FROM RECORD
Attorney Docket No. 4989-0159PUS1	:	

This is a decision on the Request to Withdraw as attorney or agent of record under 37 C.F.R. § 1.36(b), filed November 23, 2010.

The request is **APPROVED**.

A grantable request to withdraw as attorney/agent of record must be signed by every attorney/agent seeking to withdraw or contain a clear indication that one attorney is signing on behalf of another/others. The Office will require the practitioner(s) to certify that he, she or they have: (1) given reasonable notice to the client, prior to the expiration of the reply period, which the practitioner(s) intends to withdraw from employment; (2) delivered to the client or a duly authorized representative of the client all papers and property (including funds) to which the client is entitled; and (3) notified the client of any replies that may be due and the time frame within which the client must respond, pursuant to 37 CFR 10.40 (c).

The request was signed by Gerald M. Murphy Jr., on behalf of the practitioners of record associated with Customer No. 02292.

Customer No. 02292 has been withdrawn as from record. Applicant is reminded that there is no attorney of record at this time.

The correspondence address of record has been changed and the new correspondence address is the address indicated below.

There is an outstanding non final Office action mailed September 15, 2010, that requires a reply from the applicant.

Telephone inquires concerning this decision should be directed to the undersigned at (571) 272-6059. All other inquires concerning either the examination or status of the application should be directed to the Technology Center.

A. Kelley

Alicia Kelley
Petitions Examiner
Office of Petitions

cc: JAMES CHU
9F, NO. 192 LIANCHENG ROAD
ZHONGHA CITY, TAIPEI 235 TAIWAN (R.O.C)

UNITED STATES PATENT AND TRADEMARK OFFICE

UNITED STATES DEPARTMENT OF COMMERCE
United States Patent and Trademark Office
Address: COMMISSIONER FOR PATENTS
P.O. Box 1450
Alexandria, Virginia 22313-1450
www.uspto.gov

APPLICATION NUMBER	FILING OR 371(C) DATE	FIRST NAMED APPLICANT	ATTY. DOCKET NO./TITLE
11/976,876	10/29/2007	James Chu	4989-0159PUS1

CONFIRMATION NO. 4453

POWER OF ATTORNEY NOTICE

2292
BIRCH STEWART KOLASCH & BIRCH
PO BOX 747
FALLS CHURCH, VA 22040-0747

OC000000045088405

Date Mailed: 12/22/2010

NOTICE REGARDING CHANGE OF POWER OF ATTORNEY

This is in response to the Power of Attorney filed 11/23/2010.

- The withdrawal as attorney in this application has been accepted. Future correspondence will be mailed to the new address of record. 37 CFR 1.33.

/atkelley/

Office of Data Management, Application Assistance Unit (571) 272-4000, or (571) 272-4200, or 1-888-786-0101

UNITED STATES PATENT AND TRADEMARK OFFICE

Commissioner for Patents
United States Patent and Trademark Office
P.O. Box 1450
Alexandria, VA 22313-1450
www.uspto.gov

BIRCH STEWART KOLASCH & BIRCH
PO BOX 747
FALLS CHURCH, VA 22040-0747

MAILED
MAR 24 2011
OFFICE OF PETITIONS

In re Application of Ming Hsiu Wu Application No. 11/976,882 Filed: October 29, 2007 Attorney Docket No. 4989-0160PUS1	: : : : : :	DECISION ON PETITION TO WITHDRAW FROM RECORD

This is a decision on the Request to Withdraw as attorney or agent of record under 37 C.F.R. § 1.36(b), filed February 11, 2011.

The request is **NOT APPROVED** because it is moot.

A review of the file record indicates that on March 14, 2011 the power of attorney to Birch Stewart Kolasch & Birch was revoked by the applicant of the patent application. Accordingly, the request to withdraw under 37 C.F.R. § 1.36(b) is moot.

All future communications from the Office will be directed to the below-listed address until otherwise notified by applicant.

Telephone inquires concerning this decision should be directed to the undersigned at 571-272- 7751. All other inquires concerning either the examination or status of the application should be directed to the Technology Center.

Joan Olszewski
Petitions Examiner
Office of Petitions

cc: SAM CHEN
7F-1, 293, ROOSEVELT ROAD, SEC 3
TAIPEI TW TAIWAN

UNITED STATES PATENT AND TRADEMARK OFFICE

Commissioner for Patents
United States Patent and Trademark Office
P.O. Box 1450
Alexandria, VA 22313-1450
www.uspto.gov

Paper No.

MUIR PATENT CONSULTING, PLLC
9913 Georgetown Pike, Suite 200
P.O. Box 1213
GREAT FALLS VA 22066

MAILED
AUG 30 2010
OFFICE OF PETITIONS

In re Application of	:	
Lee et al.	:	
Application No. 11/976,911	:	DECISION ON PETITION
Filed: October 29, 2007	:	PURSUANT TO
Attorney Docket No.: GCTS-0076	:	37 C.F.R. § 1.137(B)
Title: LOW NOISE AMPLIFIER HAVING IMPROVED LINEARITY	:	

This is a decision on the petition pursuant to 37 C.F.R. § 1.137(b), filed April 25, 2010, to revive the above-identified application.

This petition pursuant to 37 C.F.R. § 1.137(b) is **GRANTED**.

The above-identified application became abandoned for failure to submit the issue and publication fees in a timely manner in reply to the Notice of Allowance and Issue Fee Due, mailed November 19, 2009, which set a shortened statutory period for reply of three months. No extensions of time are permitted for transmitting issue[1] or publication fees.[2] Accordingly, the above-identified application became abandoned on February 20, 2010. A Notice of Abandonment was mailed on March 8, 2010.

A grantable petition pursuant to 37 C.F.R. § 1.137(b) must be accompanied by:

(1) The reply required to the outstanding Office

1 See MPEP § 710.02(e)(III).
2 See 37 C.F.R. § 1.211(e).

action or notice, unless previously filed;

(2) The petition fee as set forth in 37 C.F.R. § 1.17(m);

(3) A statement that the entire delay in filing the required reply from the due date for the reply until the filing of a grantable petition pursuant to this paragraph was unintentional. The Commissioner may require additional information where there is a question whether the delay was unintentional, and;

(4) Any terminal disclaimer (and fee as set forth in 37 C.F.R. § 1.20(d)) required pursuant to paragraph (d) of this section.

With this petition, Applicant has submitted the issue, publication, and petition fees, along with the proper statement of unintentional delay. As such, requirements one through three of Rule 1.137(b) have been met. The fourth requirement of Rule 1.137(b) is not applicable, as a terminal disclaimer is not required.[3]

The Office of Patent Publication will be notified of this decision so that the present application can be processed into a patent.

It is noted that the address listed on the petition differs from the address of record. The application file does not indicate a change of correspondence address has been filed in this case, although the address given on the petition differs from the address of record. If Petitioner desires to receive future correspondence regarding this application, the change of correspondence address must be submitted. A courtesy copy of this decision will be mailed to Petitioner. However, all future correspondence will be directed to the address of record until such time as appropriate instructions are received to the contrary. Petitioner will not receive future correspondence related to this application unless Change of Correspondence Address, Patent Form (PTO/SB/122) is submitted for the above-identified application. For Petitioner's convenience, a blank Change of Correspondence Address, Patent Form (PTO/SB/122), may be found at http://www.uspto.gov/web/forms/sb0122.pdf.

It is not apparent whether the person signing the statement of unintentional delay was in a position to have firsthand or direct

3 See Rule 1.137(d).

knowledge of the facts and circumstances of the delay at issue. Nevertheless, such statement is being treated as having been made as the result of a reasonable inquiry into the facts and circumstances of such delay.[4] In the event that such an inquiry has not been made, Petitioner must make such an inquiry. If such inquiry results in the discovery that the delay was intentional, Petitioner must notify the Office.

Petitioner may find it beneficial to view Private PAIR within a fortnight of the present decision to ensure that the revival has been acknowledged by the Office of Patent Publication in response to this decision. It is noted that all inquiries with regard to any failure of that change in status should be directed to the Office of Patent Publication where that change of status must be effected - **the Office of Petitions cannot effectuate a change of status.**

Telephone inquiries regarding *this decision* should be directed to the undersigned at (571) 272-3225.[5] All other inquiries concerning the status of the application should be directed to the Office of Patent Publication at 571-272-4200.

/Paul Shanoski/
Paul Shanoski
Senior Attorney
Office of Petitions

cc: Carl R. Wesolowski
758 Walker Rd
Ste C
Great Falls, VA 22066

---

4 See 37 C.F.R. § 10.18(b); cf. Changes to Patent Practice and Procedure; Final Rule Notice, 62 Fed. Reg. 53131, 53178 (October 10, 1997), 1203 Off. Gaz. Pat. Office 63, 103 (October 21, 1997).
5 Petitioner will note that all practice before the Office should be in writing, and the action of the Office will be based exclusively on the written record in the Office. See 37 C.F.R. § 1.2. As such, Petitioner is reminded that no telephone discussion may be controlling or considered authority for any further action(s) of Petitioner.

UNITED STATES PATENT AND TRADEMARK OFFICE

Commissioner for Patents
United States Patent and Trademark Office
P.O. Box 1450
Alexandria, VA 22313-1450
www.uspto.gov

ROSENBERG, KLEIN & LEE
3458 ELLICOTT CENTER DRIVE-SUITE 101
ELLICOTT CITY MD 21043

MAILED

MAY 09 2011

OFFICE OF PETITIONS

In re Application of	:	
ZOU, Yu	:	
Application No. 11/976,942	:	DECISION ON PETITION
Filed: October 30, 2007	:	TO WITHDRAW
Attorney Docket No. **MR3517-205**	:	FROM RECORD
	:	

This is a decision on the Request to Withdraw as attorney or agent of record under 37 C.F.R. § 1.36(b), filed April 20, 2011.

The request is **NOT APPROVED**.

The Office will no longer accept address changes to a new practitioner or law firm filed with a Request, absent the filing of a power of attorney to the new representative. The Office will either change the correspondence address of record to the most current address information provided for the assignee of the entire interest who properly became of record under 37 C.F.R 3.71 or, if no assignee of the entire interest has properly been made of record under 37 CFR 3.71, the most current address information provided for the first named inventor.

Accordingly, the request to withdraw from record cannot be approved because the change of address is not that of: (1) the first named inventor; or (2) an assignee of the entire interest under C.F.R 3.71, who has properly intervened.

All future communications from the Office will continue to be directed to the above-listed address until otherwise notified by applicant.

Telephone inquiries concerning this decision should be directed to the undersigned at 571-272-4231.

Michelle R. Eason
Paralegal Specialist
Office of Petitions

UNITED STATES PATENT AND TRADEMARK OFFICE

Commissioner for Patents
United States Patent and Trademark Office
P.O. Box 1450
Alexandria, VA 22313-1450
www.uspto.gov

ROSENBERG, KLEIN & LEE
3458 ELLICOTT CENTER DRIVE-SUITE 101
ELLICOTT CITY MD 21043

MAILED

JUN 20 2011

OFFICE OF PETITIONS

In re Application of	:	
ZOU, Yu	:	
Application No. 11/976,942	:	DECISION ON PETITION
Filed: October 30, 2007	:	TO WITHDRAW
Attorney Docket No. **MR3517-205**	:	FROM RECORD
	:	

This is a decision on the renewed Request to Withdraw as attorney or agent of record under 37 C.F.R. § 1.36(b), filed May 12, 2011.

The request is **APPROVED**.

A grantable request to withdraw as attorney/agent of record must be signed by every attorney/agent seeking to withdraw or contain a clear indication that one attorney is signing on behalf of another/others. The Office requires the practitioner(s) requesting withdrawal to certify that he, she, or they have: (1) given reasonable notice to the client, prior to the expiration of the response period, that the practitioner(s) intends to withdraw from employment; (2) delivered to the client or a duly authorized representative of the client all papers and property (including funds) to which the client is entitled; and (3) notified the client of any responses that may be due and the time frame within which the client must respond, pursuant 37 CFR 10.40(c).

The request was signed by Morton J. Rosenberg on behalf of all attorneys of record who are associated with customer No. 04586. All attorneys/agents associated have been withdrawn. Applicant is reminded that there is no attorney of record at this time.

All future correspondence will be directed to the first named inventor at the address indicated below.

There is an outstanding Office action mailed March 30, 2011 that requires a reply from the applicant.

Telephone inquiries concerning this decision should be directed to the undersigned at 571-272-4231.

Michelle R. Eason
Paralegal Specialist
Office of Petitions

cc: **YU ZOU**
5F, 26 XINGHAI STREET
SUZHOU INDUSTRIAL PARK
JIANGSU, CHINA

UNITED STATES DEPARTMENT OF COMMERCE
COMMISSIONER FOR PATENTS
P. O. BOX 1450
ALEXANDRIA, VA 22313-1450

Date	: 8/18/2010
Patent No.	: 7,755,080 B2
Serial No.	: 11/976967
Inventor(s)	: Song et al.
Issue Date	: July 13, 2010
Title	: **METHOD FOR FORMING QUANTUM DOT, AND QUANTUM SEMICONDUCTOR DEVICE AND METHOD FOR FABRICATING THE SAME**
Doc./File No.	: **042976A**

Re: Consideration for Certificate of Correction

Consideration has been given your request for a certificate of correction, for the above-identified patent under the provisions of Rule 1.322.

Respecting the alleged error in the inventor's address, inventors' addresses are printed in accordance with the Declaration or Oath, and in accordance with the present style for printing, in that only the city *or* another political unit (if no city is indicated) *and* either the state *or* country are printed in the printed patent, if the patent has an assignee.

A petition under C.F.R. 1.182 is required to correct the alleged error in the inventor(s) address, since inventors' addresses are printed in accordance with the *"Residence Address in assigned patents or P.O. Box Address for not assigned patents"* on the Declaration. The error is the result of applicants' failure to comply with requirements that the complete and correct address be indicated, no correction is in order here under the provisions of Rule 1.322 or 1.323, unless a petition is granted.

In view of the foregoing, your request is hereby denied.

Any petition under 37 CFR 1.182 should be directed to the attention of the Assistant Commissioner for Patents, using the following mailing address or FAX number.

By Mail: Commissioner of Patents
P.O. Box 1450
Alexandria, VA 22313-1450

By Fax: (703) 308-6916
Attn.: Office of Petitions

If, the petition under 37 CFR 1.182 (required fee currently $130), is filed and granted, the patentee would be entitled to a certificate of correction under 37 CFR 1.323 (required fee currently $100).

Ernest C. White, *LIE* (703) 756-1590
Mary F. Diggs, *Supervisor* (703) 756-1580
Decisions & Certificates of Correction Branch
ernest.white@uspto.gov

WESTERMAN, HATTORI, DANIELS & ADRIAN, LLP
1250 CONNECTICUT AVENUE, NW
SUITE 700
WASHINGTON DC 20036
ecw

PTO/SB/131 (01-10)
Approved for use through 02/28/2011. OMB 0651-0020
U.S. Patent and Trademark Office; U. S. DEPARTMENT OF COMMERCE
Under the Paperwork Reduction Act of 1995, no persons are required to respond to a collection of information unless it displays a valid OMB control number.

REQUEST FOR RECALCULATION OF PATENT TERM ADJUSTMENT IN VIEW OF *WYETH**

Attorney Docket Number: MOST3001AP/C/JEK	Patent Number: 7665267
Filing Date (or 371(b) or (f) Date): 2007-10-30	Issue Date: 2010-02-23
First Named Inventor: Stefan Simon Gustaaf Moriau	
Title: FLOOR PANELS WITH EDGE CONNECTORS	

PATENTEE HEREBY REQUESTS RECALCULATION OF THE PATENT TERM ADJUSTMENT (PTA) UNDER 35 USC 154(b) INDICATED ON THE ABOVE-IDENTIFIED PATENT. THE PATENTEE'S SOLE BASIS FOR REQUESTING THE RECALCULATION IS THE USPTO'S PRE-*WYETH* INTERPRETATION OF 35 U.S.C. 154(b)(2)(A).

Note: This form is only for requesting a recalculation of PTA for patents issued before March 2, 2010, if the sole basis for requesting the recalculation is the USPTO's pre-*Wyeth* interpretation of 35 U.S.C. 154(b)(2)(A). See Instruction Sheet on page 2 for more information.

Patentees are reminded that to preserve the right to review in the United States District Court for the District of Columbia of the USPTO's patent term adjustment determination, a patentee must ensure that he or she also takes the steps required under 35 U.S.C. 154(b)(3) and (b)(4) and 37 CFR 1.705 in a timely manner.

**Wyeth v. Kappos*, No. 2009-1120 (Fed. Cir., Jan. 7, 2010).

Signature /ThomasJMoore/	Date 2010-08-20
Name (Print/Typed) Thomas J. Moore	Registration Number 28974

***Note**: Signatures of all the inventors or assignees of record of the entire interest or their representative(s) are required in accordance with 37 CFR 1.33 and 11.18. Please see 37 CFR 1.4(d) for the form of the signature. If necessary, submit multiple forms for more than one signature, see below**.*

☐ *Total of _____ forms are submitted.

The information is required to obtain or retain a benefit by the public which is to file (and by the USPTO to process) an application. Confidentiality is governed by 35 U.S.C. 122 and 37 CFR 1.11 and 1.14. This collection is estimated to take 12 hours to complete, including gathering, preparing, and submitting the completed application form to the USPTO. Time will vary depending upon the individual case. Any comments on the amount of time you require to complete this form and/or suggestions for reducing this burden, should be sent to the Chief Information Officer, U.S. Patent and Trademark Office, U.S. Department of Commerce, P.O. Box 1450, Alexandria, VA 22313-1450. DO NOT SEND FEES OR COMPLETED FORMS TO THIS ADDRESS. **SEND TO: Commissioner for Patents, P.O. Box 1450, Alexandria, VA 22313-1450.**

If you need assistance in completing the form, call 1-800-PTO-9199 and select option 2.

PTO/SB/131 (01-10)
Approved for use through 02/28/2011. OMB 0651-0020
U.S. Patent and Trademark Office; U. S. DEPARTMENT OF COMMERCE
Under the Paperwork Reduction Act of 1995, no persons are required to respond to a collection of information unless it displays a valid OMB control number.

Instruction Sheet for: REQUEST FOR RECALCULATION OF PATENT TERM ADJUSTMENT IN VIEW OF *WYETH**

(Not to be Submitted to the USPTO)

This form is only for requesting a recalculation of PTA for patents issued before March 2, 2010, if the sole basis for requesting the recalculation is the USPTO's pre-*Wyeth* interpretation of 35 U.S.C. 154(b)(2)(A).

This form must be filed within 180 days of the day the patent was granted, with the following exception:

> Patentees who received a decision from the USPTO under the USPTO's pre-Wyeth interpretation of 35 U.S.C. 154(b)(2)(A) may file a request for reconsideration of that decision if such a request for reconsideration is filed within **two months** of the date of the decision (37 CFR 1.181(f)). If the patentee's sole basis for requesting reconsideration of the decision is the USPTO's pre-Wyeth interpretation of 35 U.S.C. 154(b)(2)(A), the request for reconsideration need only state that reconsideration is being requested in view of Wyeth (this form may be used for this purpose if it is filed within **two months** of the date of the decision from the USPTO).

Do not use this form if the application has been allowed, but not yet issued as a patent.

1. **For patents issued before March 2, 2010:** A request for reconsideration under 37 CFR 1.705(d) and the fee set forth in 37 CFR 1.18(e) are not required, provided that the patentee's sole basis for requesting recalculation of the PTA in the patent is the USPTO's pre-*Wyeth* interpretation of 35 U.S.C. 154(b)(2)(A) and this form is filed within 180 days of the day the patent was granted.

2. **For patents issued on or after March 2, 2010 (do not use this form):** Patentees seeking a revised PTA in a patent issued on or after March 2, 2010, must file a request for reconsideration under 37 CFR 1.705(d) that complies with the requirements of 37 CFR 1.705(b)(1) and (b)(2) within two months of the day the patent issued.

For more information, see "Notice Concerning Calculation of the Patent Term Adjustment With Respect to the Overlapping Delay Provision of 35 U.S.C. 154(b)(2)(A)" available on the USPTO Web site at http://www.uspto.gov/patents/law/notices/2010.jsp.

**Wyeth v. Kappos*, No. 2009-1120 (Fed. Cir., Jan. 7, 2010).

Privacy Act Statement

The **Privacy Act of 1974 (P.L. 93-579)** requires that you be given certain information in connection with your submission of the attached form related to a patent application or patent. Accordingly, pursuant to the requirements of the Act, please be advised that: (1) the general authority for the collection of this information is 35 U.S.C. 2(b)(2); (2) furnishing of the information solicited is voluntary; and (3) the principal purpose for which the information is used by the U.S. Patent and Trademark Office is to process and/or examine your submission related to a patent application or patent. If you do not furnish the requested information, the U.S. Patent and Trademark Office may not be able to process and/or examine your submission, which may result in termination of proceedings or abandonment of the application or expiration of the patent.

The information provided by you in this form will be subject to the following routine uses:

1. The information on this form will be treated confidentially to the extent allowed under the Freedom of Information Act (5 U.S.C. 552) and the Privacy Act (5 U.S.C 552a). Records from this system of records may be disclosed to the Department of Justice to determine whether disclosure of these records is required by the Freedom of Information Act.
2. A record from this system of records may be disclosed, as a routine use, in the course of presenting evidence to a court, magistrate, or administrative tribunal, including disclosures to opposing counsel in the course of settlement negotiations.
3. A record in this system of records may be disclosed, as a routine use, to a Member of Congress submitting a request involving an individual, to whom the record pertains, when the individual has requested assistance from the Member with respect to the subject matter of the record.
4. A record in this system of records may be disclosed, as a routine use, to a contractor of the Agency having need for the information in order to perform a contract. Recipients of information shall be required to comply with the requirements of the Privacy Act of 1974, as amended, pursuant to 5 U.S.C. 552a(m).
5. A record related to an International Application filed under the Patent Cooperation Treaty in this system of records may be disclosed, as a routine use, to the International Bureau of the World Intellectual Property Organization, pursuant to the Patent Cooperation Treaty.
6. A record in this system of records may be disclosed, as a routine use, to another federal agency for purposes of National Security review (35 U.S.C. 181) and for review pursuant to the Atomic Energy Act (42 U.S.C. 218(c)).
7. A record from this system of records may be disclosed, as a routine use, to the Administrator, General Services, or his/her designee, during an inspection of records conducted by GSA as part of that agency's responsibility to recommend improvements in records management practices and programs, under authority of 44 U.S.C. 2904 and 2906. Such disclosure shall be made in accordance with the GSA regulations governing inspection of records for this purpose, and any other relevant (*i.e.*, GSA or Commerce) directive. Such disclosure shall not be used to make determinations about individuals.
8. A record from this system of records may be disclosed, as a routine use, to the public after either publication of the application pursuant to 35 U.S.C. 122(b) or issuance of a patent pursuant to 35 U.S.C. 151. Further, a record may be disclosed, subject to the limitations of 37 CFR 1.14, as a routine use, to the public if the record was filed in an application which became abandoned or in which the proceedings were terminated and which application is referenced by either a published application, an application open to public inspection or an issued patent.
9. A record from this system of records may be disclosed, as a routine use, to a Federal, State, or local law enforcement agency, if the USPTO becomes aware of a violation or potential violation of law or regulation.

UNITED STATES PATENT AND TRADEMARK OFFICE

UNITED STATES DEPARTMENT OF COMMERCE
United States Patent and Trademark Office
Address: COMMISSIONER FOR PATENTS
P.O. Box 1450
Alexandria, Virginia 22313-1450
www.uspto.gov

BACON & THOMAS, PLLC
625 SLATERS LANE
FOURTH FLOOR
ALEXANDRIA, VA 22314-1176

Mail Date: 09/08/2010

Applicant	: Stefan Simon Gustaaf Moriau	: DECISION ON REQUEST FOR
Patent Number	: 7665267	: RECALCULATION of PATENT
Issue Date	: 02/23/2010	: TERM ADJUSTMENT IN VIEW
Application No	: 11/976,987	: OF WYETH AND NOTICE OF INTENT TO
Filed	: 10/30/2007	: ISSUE CERTIFICATE OF CORRECTION
		:

The Request for Recalculation is **GRANTED** to the extent indicated.

The patent term adjustment has been determined to be **0** days. The USPTO will *sua sponte* issue a certificate of correction reflecting the amount of PTA days determined by the recalculation.

Prior to the issuance of the certificate of correction, the USPTO will afford patentee an opportunity to be heard and request reconsideration. Accordingly, patentee has **one month or thirty (30) days**, whichever is longer, to file a request for reconsideration of this patent term adjustment calculation. See 35 U.S.C. 154(b)(3)(B)(ii) and 37 CFR 1.322(a)(4). No extensions of time will be granted under 37 CFR 1.136.

Patentee should use document code PET.OP if electronically filing a request for reconsideration of this patent term adjustment calculation. The patentee must also include the information required by 37 CFR 1.705(b)(2) and the fee required by 37 CFR 1.18(e). If patentee does not file a timely request for reconsideration of this patent term adjustment calculation including the information required by 37 CFR 1.705(b)(2) and the fee required by 37 CFR 1.18(e), the USPTO will issue a certificate of correction reflecting the PTA determination noted above.

Patentee should be aware that in order to preserve the right to review in the United States District Court for the District of Columbia of the USPTO patent term adjustment determination, patentee must ensure that he or she also take the steps required under 35 U.S.C. 154(b)(4)(A) in a timely manner. Nothing in the request for recalculation should be construed as providing an alternative time frame for commencing a civil action under 35 U.S.C. 154(b)(4)(A).

Any questions concerning this decision should be directed to the Office of Patent Legal Administration at 571-272-7702.

UNITED STATES PATENT AND TRADEMARK OFFICE

Commissioner for Patents
United States Patent and Trademark Office
P.O. Box 1450
Alexandria, VA 22313-1450

STERNE, KESSLER, GOLDSTEIN & FOX P.L.L.C.
1100 NEW YORK AVENUE, N.W.
WASHINGTON, DC 20005

MAILED
JAN 13 2011
OFFICE OF PETITIONS

Applicant: Sette, et al.
Appl. No.: 11/976,998
Filing Date: October 30, 2007
Title: Inducing Cellular Immune Responses To Hepatitis B Virus Using Peptide And Nucleic Acid Compositions
Pub. No.: US 2009/0311283 A1
Pub. Date: December 17, 2009

This is a decision on the request for a corrected patent application publication under 37 CFR 1.221(b), received on February 17, 2010, for the above-identified application.

The request is granted.

The corrected patent application publication will be published in due course, unless the patent issues before the application is republished.

The applicant is advised that a "request for republication of an application previously published" may be filed under 37 CFR 1.221 (a). Such a request for republication "must include a copy of the application compliance with the Office's electronic filing system requirements and be accompanied by the publication fee set forth in § 1.18 (d) and the processing fee set forth in § 1.17 (i)." If the request for republication does not comply with the electronic filing system requirements, the republication will not take place and the publication fee set forth in § 1.18 (d) will be refunded. The processing fee will be retained.

Any request for republication under 37 CFR 1.221(a), must be submitted via the EFS system, as a "**Pre-Grant Publication**." A Quick Start Guide for filing a request for a Pre-Grant Publication, such as a request for republication, may be found on the link below:

http://www.uspto.gov/patents/process/file/efs/guidance/index.jsp

Inquiries relating to this matter may be directed to Mark Polutta at (571) 272-7709.

Mark Polutta
Senior Legal Advisor
Office of Patent Legal Administration
Office of the Deputy Commissioner
for Patent Examination Policy

UNITED STATES PATENT AND TRADEMARK OFFICE

Commissioner for Patents
United States Patent and Trademark Office
P.O. Box 1450
Alexandria, VA 22313-1450
www.uspto.gov

Ashok Tankha
Of Counsel, Lipton, Weinberger & Husick
36 Greenleigh Drive
Sewell NJ 08080

MAILED

SEP 21 2011

OFFICE OF PETITIONS

In re Application of	:	
Gurvinder Singh	:	
Application No. 11/977,001	:	DECISION ON PETITION
Filed: October 22, 2007	:	TO WITHDRAW
Attorney Docket No. **CellSpin_02**	:	FROM RECORD
	:	

This is a decision on the Request to Withdraw as attorney or agent of record under 37 CFR § 1.36(b), filed September 15, 2011.

The request is **APPROVED**.

A grantable request to withdraw as attorney/agent of record must be signed by every attorney/agent seeking to withdraw or contain a clear indication that one attorney is signing on behalf of another/others. The Office requires the practitioner(s) requesting withdrawal to certify that he, she, or they have: (1) given reasonable notice to the client, prior to the expiration of the response period, that the practitioner(s) intends to withdraw from employment; (2) delivered to the client or a duly authorized representative of the client all papers and property (including funds) to which the client is entitled; and (3) notified the client of any responses that may be due and the time frame within which the client must respond , pursuant to 37 CFR 10.40.

The request was signed by Ashok Tankha on behalf of all attorneys of record who are associated with the above-identified application.

All attorneys/agents associated with the above-identified application have been withdrawn. Applicant is reminded that there is no attorney of record at this time.

The correspondence address of record has been changed and all future correspondence will be directed to the first named inventor Gurvinder Singh at the address indicated below.

There is an outstanding Office action mailed July 21, 2011, that requires a reply from the applicant.

Telephone inquiries concerning this decision should be directed to the undersigned at 571-272-4584.

/JoAnne Burke/
JoAnne Burke
Petitions Examiner
Office of Petitions

cc: Gurvinder Singh
201 Harrison St., #927
San Francisco, CA 94105

UNITED STATES PATENT AND TRADEMARK OFFICE

UNITED STATES DEPARTMENT OF COMMERCE
United States Patent and Trademark Office
Address: COMMISSIONER FOR PATENTS
P.O. Box 1450
Alexandria, Virginia 22313-1450
www.uspto.gov

APPLICATION NUMBER	FILING OR 371(C) DATE	FIRST NAMED APPLICANT	ATTY. DOCKET NO./TITLE
11/977,001	10/22/2007	Gurvinder Singh	CellSpin_02

CONFIRMATION NO. 2190

POWER OF ATTORNEY NOTICE

Ashok Tankha
Of Counsel, Lipton, Weinberger & Husick
36 Greenleigh Drive
Sewell, NJ 08080

OC000000049952094

Date Mailed: 09/21/2011

NOTICE REGARDING CHANGE OF POWER OF ATTORNEY

This is in response to the Power of Attorney filed 09/15/2011.

- The withdrawal as attorney in this application has been accepted. Future correspondence will be mailed to the new address of record. 37 CFR 1.33.

/jlburke/

Office of Data Management, Application Assistance Unit (571) 272-4000, or (571) 272-4200, or 1-888-786-0101

UNITED STATES PATENT AND TRADEMARK OFFICE

Commissioner for Patents
United States Patent and Trademark Office
P.O. Box 1450
Alexandria, VA 22313-1450
www.uspto.gov

MAILED
APR 15 2011
OFFICE OF PETITIONS

DONALD W. MEEKER
PATENT AGENT
924 EAST OCEAN FRONT #E
NEWPORT BEACH CA 92661

In re Application of	:	
KIRCHER	:	
Application No. 11/977,025	:	ON PETITION
Filed: October 23, 2007	:	
Attorney Docket No.	:	

This is a decision on the petition under the unintentional provisions of 37 CFR 1.137(b), filed February 17, 2011, to revive the above-identified application.

The petition is **DISMISSED**.

The application became abandoned for failure to timely reply within the meaning of 37 CFR 1.113 to the final Office action, mailed March 9, 2010, which set a shortened statutory period for reply of **three (3) months**. No extensions of time under the provisions of 37 CFR 1.136(a) were obtained. Accordingly, the application became abandoned on June 10, 2010.

A grantable petition under 37 CFR 1.137(b) must be accompanied by: (1) the required reply, unless previously filed; (2) the petition fee as set forth in 37 CFR 1.17(m); (3) a statement that the entire delay in filing the required reply from the due date for the reply until the filing of a grantable petition pursuant to 37 CFR 1.137(b) was unintentional; and (4) any terminal disclaimer (and fee as set forth in 37 CFR 1.20(d)) required by 37 CFR 1.137(d). Where there is a question as to whether either the abandonment or the delay in filing a petition under 37 CFR 1.137 was unintentional, the Director may require additional information. See MPEP 711.03(c)(II)(C) and (D). The instant petition lacks item(s) (1) and (2).

With respect to item (1): A review of the Office record shows petitioner submitted a Request for Continued Examination (RCE) with the petition filed February 17, 2011, however, no fee was received. In this regard, the reply cannot be considered to be in compliance with 37 CFR 1.137(b).

With respect to item (2): The petition filed February 17, 2011, indicated a petition fee of $810 was attached, however, no fee accompanied the petition. Accordingly, the petition cannot be accepted as meeting the requirements as set forth in 37 CFR 1.17(m). No consideration on the merits can be given until the required fee is remitted.

Any request for reconsideration of this decision must be submitted within TWO (2) MONTHS from the mail date of this decision. Extensions of time under 37 CFR 1.136(a) are permitted. The reconsideration request should include a cover letter entitled "Renewed Petition under 37 CFR 1.137(b)." This is **not** a final agency action within the meaning of 5 U.S.C. § 704.

Further correspondence with respect to this matter should be addressed as follows:

By Mail: Mail Stop PETITION
Commissioner for Patents
P. O. Box 1450
Alexandria, VA 22313-1450

By hand: U. S. Patent and Trademark Office
Customer Service Window, Mail Stop Petitions
Randolph Building
401 Dulany Street
Alexandria, VA 22314

The centralized facsimile number is **(571) 273-8300.**

Telephone inquiries concerning this decision should be directed to the undersigned at (571) 272-6735.

/Diane C. Goodwyn/
Diane C. Goodwyn
Petitions Examiner
Office of Petitions

UNITED STATES PATENT AND TRADEMARK OFFICE

Commissioner for Patents
United States Patent and Trademark Office
P.O. Box 1450
Alexandria, VA 22313-1450
www.uspto.gov

ROYSTON RAYZOR VICKERY & WILLIAMS L.L.P.
306 - 22ND STREET
SUITE 301
GALVESTON TX 77550

MAILED

AUG 01 2011

OFFICE OF PETITIONS

In re Application of	:	DECISION ON PETITION
Lance Botkin	:	
Application No. 11/977,070	:	
Filed: October 22, 2007	:	
Attorney Docket No. 4215.53883	:	

This is a decision on the petition under the unintentional provisions of 37 CFR 1.137(b), filed July 6, 2011, to revive the above-identified application.

The petition is **GRANTED**.

The application became abandoned for failure to properly reply in a timely manner to the non-final Office action mailed November 10, 2010, which set a shortened statutory period for reply of three (3) months. No extensions of time under the provisions of 37 CFR 1.136(a) were obtained. Accordingly, the application became abandoned on February 11, 2011. A Notice of Abandonment was mailed on June 7, 2011.

The petition satisfies the requirements of 37 CFR 1.137(b) in that petitioner has supplied (1) the reply in the form of an amendment, (2) the petition fee of $810, and (3) a proper statement of unintentional delay. Accordingly, the amendment is accepted as being unintentionally delayed.

An extension of time under 37 CFR 1.136 must be filed prior to the expiration of the maximum extendable period for reply. *See* In re Application of S., 8 USPQ2d 1630, 1631 (Comm'r Pats. 1988). Since the $555 extension of time fee submitted with the petition on July 6, 2011 was subsequent to the maximum extendable period for reply, this fee is unnecessary and will be refunded to petitioner's credit card.

Telephone inquiries concerning this decision should be directed to Kimberly Inabinet at (571) 272-4618.

This application is being referred to Technology Center AU 3637 for appropriate action by the Examiner in the normal course of business on the reply received July 6, 2011.

/Kimberly Inabinet/

Kimberly Inabinet
Petitions Examiner
Office of Petitions

SPE RESPONSE FOR CERTIFICATE OF CORRECTION

AU 2491
Ashok Patel (SPE)

Paper No.: _____

DATE : 4/28/2011

TO SPE OF : ART UNIT ~~2477~~ - ~~Shiferaw Eyeni~~ (Spe)

SUBJECT : Request for Certificate of Correction for Appl. No.: 11/977109 Patent No.: 7856556

CofC mailroom date: 4/28/2011

Please respond to this request for a certificate of correction within 7 days.

FOR IFW FILES:

Please review the requested changes/corrections as shown in the **COCIN** document(s) in the IFW application image. No new matter should be introduced, nor should the scope or meaning of the claims be changed.

Please complete the response (see below) and forward the completed response to scanning using document code **COCX**.

FOR PAPER FILES:

Please review the requested changes/corrections as shown in the attached certificate of correction. Please complete this form (see below) and forward it with the file to:

Certificates of Correction Branch (CofC)
Randolph Square – 9D10-A
Palm Location 7580

Certificates of Correction Branch
703-756-1571 _____

Thank You For Your Assistance

The request for issuing the above-identified correction(s) is hereby:
Note your decision on the appropriate box.

- ☒ **Approved** — **All** changes apply.
- ☐ **Approved in Part** — Specify below which changes **do not** apply.
- ☐ **Denied** — State the reasons for denial below.

Comments: _____

/ASHOK B. PATEL/ — **SPE**

2491 — **Art Unit**

UNITED STATES PATENT AND TRADEMARK OFFICE

Commissioner for Patents
United States Patent and Trademark Office
P.O. Box 1450
Alexandria, VA 22313-1450
www.uspto.gov

MICROSOFT CORPORATION
ONE MICROSOFT WAY
REDMOND, WA 98052

MAILED
SEP 22 2011
OFFICE OF PETITIONS

In re Application of	:	
Chi-Ho Li, et. al.	:	
Application No. 11/977,133	:	DECISION ON PETITION
Filed: October 23, 2007	:	
Attorney Docket No. 320503.01	:	

This is a decision on the renewed petition under the unintentional provisions of 37 CFR 1.137(b), filed September 16, 2011, to revive the above-identified application.

The above application became abandoned for failure to timely a reply to the Notice of Allowance and Fee(s) Due mailed May 27, 2011. A Notice of Abandonment was mailed on September 13, 2011.

Since the petition satisfies the requirements of 37 CFR 1.137(b), the petition is hereby **GRANTED**.

This application file is being referred to the Office of Data Management for further processing into a patent.

Telephone inquiries concerning this decision should be directed to the undersigned at (571) 272-3226.

Andrea Smith
Petitions Examiner
Office of Petitions

UNITED STATES PATENT AND TRADEMARK OFFICE

Commissioner for Patents
United States Patent and Trademark Office
P.O. Box 1450
Alexandria, VA 22313-1450
www.uspto.gov

THOMAS J. PERKOWSKI, ESQ. PC
22 THORNDAL CIRCLE
DARIEN, CT 06820

MAILED
MAY 18 2011
OFFICE OF PETITIONS

In re Application of	:	
Reuven Bakalash, et al.	:	
Application No. 11/977,155	:	DECISION GRANTING PETITION
Filed: October 23, 2007	:	UNDER 37 CFR 1.313(c)(2)
Attorney Docket No. 142-002USACE0	:	

This is a decision on the petition under 37 CFR 1.313(c)(2), filed May 17, 2011, to withdraw the above-identified application from issue after payment of the issue fee.

The petition is **GRANTED**.

The above-identified application is withdrawn from issue for consideration of a submission under 37 CFR 1.114 (request for continued examination). *See* 37 CFR 1.313(c)(2).

Petitioner is advised that the issue fee paid on April 12, 2011 cannot be refunded. If, however, this application is again allowed, petitioner may request that it be applied towards the issue fee required by the new Notice of Allowance.[1]

Telephone inquiries regarding this decision should be directed to undersigned at (571) 272-1642. All other inquiries concerning the examination or status of this application should be directed to the Technology Center.

This application is being referred to Technology Center AU 2628 for processing of the request for continued examination under 37 CFR 1.114 and for consideration of the concurrently filed information disclosure statement.

/AMW/
April M. Wise
Petitions Examiner
Office of Petitions

---

[1] *The request to apply the issue fee to the new Notice may be satisfied by completing and returning the new Part B – Fee(s) Transmittal Form (along with any balance due at the time of submission). Petitioner is advised that the Issue Fee Transmittal Form must be completed and timely submitted to avoid abandonment of the application.*

UNITED STATES PATENT AND TRADEMARK OFFICE

Commissioner for Patents
United States Patent and Trademark Office
P.O. Box 1450
Alexandria, VA 22313-1450
www.uspto.gov

PERKINS COIE LLP
P.O. BOX 1208
SEATTLE, WA 98111-1208

MAILED
OCT 08 2010
OFFICE OF PETITIONS

In re Application of	:	
Arthur S. Hitomi, et al.	:	
Application No. 11/977,187	:	DECISION ON PETITION
Filed: October 23, 2007	:	TO WITHDRAW
Attorney Docket No.: 71603-8023.US01	:	FROM RECORD
	:	

This is a decision on the Request to Withdraw as attorney or agent of record under 37 C.F.R. § 1.36(b), filed August 9, 2010.

The request is **NOT APPROVED**.

A grantable request to withdraw as attorney/agent of record must be signed by every attorney/agent seeking to withdraw or contain a clear indication that one attorney is signing on behalf of another/others.

The request is filed by Brian R. Coleman on behalf of all the practitioners of record.

The Office no longer accepts an address change to the new practitioner identified in the request, absent the filing of a power of attorney to the new representative. The Office will, however, change the correspondence address of record to the most current address provided for (1) the intervening assignee of the entire interest or (2) the first named inventor.

The request to withdraw from record cannot be approved at this time, since a current correspondence address was not provided.

All future communications from the Office will continue to be directed to the above-listed address until otherwise notified by applicant.

Telephone inquiries concerning this decision should be directed to undersigned at 571-272-3210. All other inquiries concerning the examination or status of this application should be directed to the Technology Center.

Irvin Dingle
Petitions Examiner
Office of Petitions

UNITED STATES PATENT AND TRADEMARK OFFICE

Commissioner for Patents
United States Patent and Trademark Office
P.O. Box 1450
Alexandria, VA 22313-1450
www.uspto.gov

AMSTER ROTHSTEIN & EBENSTEIN LLP
90 PARK AVENUE
NEW YORK NY 10016

MAILED
FEB 09 2012
OFFICE OF PETITIONS

In re Application of	:	
Ingemar J. Cox	:	
Application No. 11/977,202	:	DECISION GRANTING PETITION
Filed: October 23, 2007	:	UNDER 37 CFR 1.313(c)(2)
Attorney Docket No. 23406-5	:	

This is a decision on the petition under 37 CFR 1.313(c)(2), filed, February 7, 2012 to withdraw the above-identified application from issue after payment of the issue fee.

The petition is **GRANTED**.

The above-identified application is withdrawn from issue for consideration of a submission under 37 CFR 1.114 (request for continued examination). *See* 37 CFR 1.313(c)(2).

Petitioner is advised that the issue fee paid on December 27, 2011 in the above-identified application cannot be refunded. If, however, the above-identified application is again allowed, petitioner may request that it be applied towards the issue fee required by the new Notice of Allowance.[1]

Telephone inquiries should be directed to Irvin Dingle at (571) 272-3210.

This matter is being referred to Technology Center AU 2425 for processing of the request for continued examination under 37 CFR 1.114 and for consideration of the concurrently filed Information Disclosure Statement.

/Irvin Dingle/
Irvin Dingle
Petitions Examiner
Office of Petitions

[1] The request to apply the issue fee to the new Notice may be satisfied by completing and returning the new Issue Fee Transmittal Form PTOL-85(b), which includes the following language thereon: Commissioner for Patents is requested to apply the Issue Fee and Publication Fee (if any) or re-apply any previously paid issue fee to the application identified above. Petitioner is advised that, whether a fee is indicated as being due or not, the Issue Fee Transmittal Form **must** be completed and timely submitted to avoid abandonment. Note the language in bold text on the first page of the Notice of Allowance and Fee(s) Due (PTOL-85).

UNITED STATES PATENT AND TRADEMARK OFFICE

Commissioner for Patents
United States Patent and Trademark Office
P.O. Box 1450
Alexandria, VA 22313-1450
www.uspto.gov

THOMAS R. LAMPE
BIELEN, LAMPE & THOEMING
1390 WILLOW PASS ROAD, SUITE 1020
CONCORD CA 94520

JAN 3 1 2011

In re Application of
PALMER, WILLIAM et al.
Application No.: 11/977,235
Filing or 371(c) Date: October 25, 2007
Attorney Docket Number: SIERRA #8

DECISION ON PETITION

This is a decision on the Petition to Withdraw Holding of Abandonment received in the United States Patent and Trademark Office (USPTO) on December 15, 2010.

This petition is **GRANTED**.

The application was inadvertently abandoned for failure to timely submit the Issue Fee and Publication fee as required by the Notice of Allowance mailed August 13, 2010 which set forth a three (3) month statutory period of reply. The Notice of Abandonment was mailed on December 3, 2010.

Petitioner states that the issue fee transmittal and payment were timely filed via the USPTO on October 4, 2010. Petitioner submitted a copy of the original submission which included a properly completed Certificate of Mailing/Transmission. As authorized, the issue fee of $755.00 and 10 advance copies was charged to Credit Card Payment Form.

In view of the foregoing, the holding of abandonment for failure to timely pay the issue fee is hereby withdrawn and the application restored to pending status.

Telephone inquiries concerning this matter should be directed to the undersigned at (703) 756-1547.

Kay D. Pinkney
Application Assistance Unit
Office of Data Management

UNITED STATES PATENT AND TRADEMARK OFFICE

Commissioner for Patents
United States Patent and Trademark Office
P.O. Box 1450
Alexandria, VA 22313-1450
www.uspto.gov

DON B. FINKELSTEIN, ESQ.
LAW OFFICES OF DON FINKELSTEIN
SUITE 216
3858 CARSON STREET
TORRANCE, CA 90503

MAILED

DEC 20 2010

OFFICE OF PETITIONS

In re Application of	:	
Herzer et al.	:	
Application No: 11/977,372	:	DECISION ON PETITION
Filed: October 24, 2007	:	UNDER 37 CFR 1.137(b)
Attorney Docket No. PA5464	:	

This is a decision on the petition, filed October 29, 2010, which is being treated as a petition under 37 CFR 1.137(b) to revive the instant nonprovisional application for failure to timely notify the U.S. Patent and Trademark (USPTO) of the filing of an application in a foreign country, or under a multinational treaty that requires publication of applications eighteen months after filing. *See* 37 CFR 1.137(f).

The petition is **GRANTED**.

Petitioner states that the instant nonprovisional application is the subject of an application filed in an eighteen-month publication country on June 2, 2008. However, the USPTO was unintentionally not notified of this filing within 45 days subsequent to the filing of the subject application in an eighteen-month publication country.

In view of the above, this application became abandoned pursuant to 35 U.S.C. § 122(b)(2)(B)(iii) and 37 CFR 1.213(c) for failure to timely notify the Office of the filing of an application in a foreign country or under a multilateral international agreement that requires publication of applications 18 months after filing.

A petition to revive an application abandoned pursuant to 35 U.S.C. 122(b)(2)(B)(iii) for failure to notify the USPTO of a foreign filing must be accompanied by:

(1) the required reply which is met by the notification of such filing in a foreign country or under a multinational treaty;
(2) the petition fee as set forth in 37 CFR 1.17(m); and
(3) a statement that the entire delay in filing the required reply from the due date of the reply until the filing of a grantable petition was unintentional.

The instant petition has been found to be in compliance with 37 CFR 1.137(b). Accordingly, the failure to timely notify the USPTO of a foreign or international filing within 45 days after the date of filing of such foreign or international application as provided by 35 U.S.C. § 122(b)(2)(B)(iii) and 37 CFR 1.213(c) is accepted as having been unintentionally delayed.

The previous Request and Certification under 35 U.S.C. § 122(b)(2)(B)(i) has been rescinded. A Notice Regarding Rescission of Nonpublication Request which sets forth the projected publication date of March 24, 2011, accompanies this decision on petition.

Telephone inquiries concerning this decision should be directed to Alicia Kelley at (571) 272-6059.

This application is being referred to Technology Center Art Unit 3741 for examination on the merits.

/Carl Friedman/
Carl Friedman
Petitions Examiner
Office of Petitions

ATTACHMENT: Notice Regarding Rescission of Nonpublication Request

UNITED STATES PATENT AND TRADEMARK OFFICE

UNITED STATES DEPARTMENT OF COMMERCE
United States Patent and Trademark Office
Address: COMMISSIONER FOR PATENTS
P.O. Box 1450
Alexandria, Virginia 22313-1450
www.uspto.gov

APPLICATION NUMBER	FILING OR 371(C) DATE	FIRST NAMED APPLICANT	ATTY. DOCKET NO./TITLE
11/977,372	10/24/2007	Bernardo J. Herzer	PA5464

CONFIRMATION NO. 2981

DON B. FINKELSTEIN, ESQ.
LAW OFFICES OF DON FINKELSTEIN
SUITE 216
3858 CARSON STREET
TORRANCE, CA 90503

NONPUBLICATION RESCISSION LETTER

OC000000044971358

Date Mailed: 12/15/2010

Communication Regarding Rescission Of Nonpublication Request and/or Notice of Foreign Filing

Applicant's rescission of the previously-filed nonpublication request and/or notice of foreign filing is acknowledged. The paper has been reflected in the Patent and Trademark Office's (USPTO's) computer records so that the earliest possible projected publication date can be assigned.

The projected publication date is 03/24/2011.

If applicant rescinded the nonpublication request before or on the date of "foreign filing,"[1] then no notice of foreign filing is required.

If applicant foreign filed the application after filing the above application and before filing the rescission, and the rescission did not also include a notice of foreign filing, then a notice of foreign filing (not merely a rescission) is required to be filed within 45 days of the date of foreign filing. See 35 U.S.C. § 122(b)(2)(B)(iii), and Clarification of the United States Patent and Trademark Office's Interpretation of the Provisions of 35 U.S.C. § 122(b)(2)(B)(ii)-(iv), 1272 Off. Gaz. Pat. Office 22 (July 1, 2003).

If a notice of foreign filing is required and is not filed within 45 days of the date of foreign filing, then the application becomes abandoned pursuant to 35 U.S.C. § 122(b)(2)(B)(iii). In this situation, applicant should either file a petition to revive or notify the Office that the application is abandoned. See 37 CFR 1.137(f). Any such petition to revive will be forwarded to the Office of Petitions for a decision. Note that the filing of the petition will not operate to stay any period of reply that may be running against the application.

Questions regarding petitions to revive should be directed to the Office of Petitions at (571) 272-3282.

[1] Note, for purpose of this notice, that "foreign filing" means "filing an application directed to the same invention in another country, or under a multilateral international agreement, that requires publication of applications 18 months after filing".

/atkelley/

Office of Data Management, Application Assistance Unit (571) 272-4000, or (571) 272-4200, or 1-888-786-0101

UNITED STATES PATENT AND TRADEMARK OFFICE

Commissioner for Patents
United States Patent and Trademark Office
P.O. Box 1450
Alexandria, VA 22313-1450
www.uspto.gov

DON B. FINKELSTEIN, ESQ.
LAW OFFICES OF DON FINKELSTEIN
SUITE 216
3858 CARSON STREET
TORRANCE CA 90503

MAILED
AUG 01 2011
OFFICE OF PETITIONS

In re Patent No. 7,878,170 :
Issued: February 1, 2011 :
Application No.: 11/977,372 : NOTICE
Filed: October 24, 2007 :
Attorney Docket No: **PA5464** :

This is a notice regarding your request for acceptance of a fee deficiency submission under 37 CFR 1.28. On September 1, 1998, the Court of Appeals for the Federal Circuit held that 37 CFR 1.28(c) is the sole provision governing the time for correction of the erroneous payment of the issue fee as a small entity. **See DH Technology v. Synergystex International, Inc. 154 F.3d 1333, 47 USPQ2d 1865 (Fed. Cir. Sept. 1, 1998).**

The Office no longer investigates or rejects original or reissue applications under 37 CFR 1.56. **1098 Off. Gaz. Pat. Office 502 (January 3, 1989)**. Therefore, nothing in this Notice is intended to imply that an investigation was done.

Your fee deficiency submission under 37 CFR 1.28 is hereby **ACCEPTED**.

This application is no longer entitled to small entity status. Accordingly, all future fees paid in this application must be paid at the large entity rate.

Inquiries related to this communication should be directed to the undersigned at (571) 272-3222.

/Kenya A. McLaughlin/

Kenya A. McLaughlin
Petitions Attorney
Office of Petitions

UNITED STATES PATENT AND TRADEMARK OFFICE

Commissioner for Patents
United States Patent and Trademark Office
P.O. Box 1450
Alexandria, VA 22313-1450
www.uspto.gov

Paper No.

ORTIZ & LOPEZ, PLLC
P.O. BOX 4484
ALBUQUERQUE NM 87196-4484

MAILED
JAN 3 1 2011
OFFICE OF PETITIONS

In re Patent No. 7838841 :
Issue Date: 11/23/2010 :
Application Number: 11/977410 : NOTICE
Filing or 371(c) Date: 10/24/2007 :
Attorney Docket Number: LAD-2006-105 :

This is a notice regarding your request for acceptance of a fee deficiency submission under 37 CFR 1.28 filed on November 16, 2010.

The Office no longer investigates or rejects original or reissue patents under 37 CFR 1.56. **1098 Off. Gaz. Pat. Office 502 (January 3, 1989)**. Therefore, nothing in this Notice is intended to imply that an investigation was done.

Your fee deficiency submission under 37 CFR 1.28 is hereby **ACCEPTED**.

This application is no longer entitled to small entity status. Accordingly, all future fees paid in this patent must be paid at the large entity rate.

Inquiries related to this communication should be directed to the undersigned at (571) 272-3231.

D Wood

Douglas Wood
Attorney
Office of Petitions

UNITED STATES PATENT AND TRADEMARK OFFICE

Commissioner for Patents
United States Patent and Trademark Office
P.O. Box 1450
Alexandria, VA 22313-1450
www.uspto.gov

STEPHEN S. HODGSON
2636 ALBANS RD.
HOUSTON TX 77005

MAILED
SEP 06 2011
OFFICE OF PETITIONS

In re Application of	:	
Gonzalez Montiel et al.	:	
Application No. 11/977,487	:	DECISION ON PETITION
Filed: October 25, 2007	:	
Attorney Docket No. CID001/1-DIV-US	:	

This is a decision on the petition under 37 CFR 1.182, filed April 12, 2011, to change the order of the names of the inventors.

The petition is **GRANTED**.

Office records have been corrected to reflect the change in the order of the named inventors. A corrected Filing Receipt, which sets forth the desired order of the named inventors, accompanies this decision on petition.

The issue fee in this case was paid on June 6, 2011. Therefore, the printing of the patent may have progressed to the point where the correct spelling of the inventor's name could not be included on the front page of the Letters Patent. In such event, petitioner may request a certificate of correction pursuant to the provisions of 37 CFR 1.323 and pay the required fee of $100.

As authorized, the $400 fee for the petition under 37 CFR 1.182 has been assessed to petitioner's deposit account.

This matter is being referred to the Office of Data Management for processing into a patent.

Telephone inquiries regarding this decision should be directed to the undersigned at (571) 272-

/Liana Walsh/
Liana Walsh
Petitions Examiner
Office of Petitions

ATTACHMENT: Corrected Filing Receipt

UNITED STATES PATENT AND TRADEMARK OFFICE

UNITED STATES DEPARTMENT OF COMMERCE
United States Patent and Trademark Office
Address: COMMISSIONER FOR PATENTS
P.O. Box 1450
Alexandria, Virginia 22313-1450
www.uspto.gov

APPLICATION NUMBER	FILING or 371(c) DATE	GRP ART UNIT	FIL FEE REC'D	ATTY.DOCKET.NO	TOT CLAIMS	IND CLAIMS
11/977,487	10/25/2007	1762	1540	CID001/1-DIV-US	20	4

CONFIRMATION NO. 3169

CORRECTED FILING RECEIPT

Stephen S. Hodgson
2636 Albans Rd.
Houston, TX 77005

OC000000049681625

Date Mailed: 09/06/2011

Receipt is acknowledged of this non-provisional patent application. The application will be taken up for examination in due course. Applicant will be notified as to the results of the examination. Any correspondence concerning the application must include the following identification information: the U.S. APPLICATION NUMBER, FILING DATE, NAME OF APPLICANT, and TITLE OF INVENTION. Fees transmitted by check or draft are subject to collection. Please verify the accuracy of the data presented on this receipt. **If an error is noted on this Filing Receipt, please submit a written request for a Filing Receipt Correction. Please provide a copy of this Filing Receipt with the changes noted thereon. If you received a "Notice to File Missing Parts" for this application, please submit any corrections to this Filing Receipt with your reply to the Notice. When the USPTO processes the reply to the Notice, the USPTO will generate another Filing Receipt incorporating the requested corrections**

Applicant(s)

Alfonso Gonzalez Montiel, Atizapan de Zaragoza, MEXICO;
Enrique Saldivar Guerra, Saltillo, MEXICO;

Assignment For Published Patent Application

CID Centro de Investigacion y Desarrollo Tecnologico, S.A. De. C.V., Lerma, MEXICO

Power of Attorney: None

Domestic Priority data as claimed by applicant

This application is a DIV of 10/621,929 07/16/2003 PAT 7,323,528
which claims benefit of 60/397,420 07/19/2002

Foreign Applications (You may be eligible to benefit from the **Patent Prosecution Highway** program at the USPTO. Please see http://www.uspto.gov for more information.)

If Required, Foreign Filing License Granted: 01/25/2008

The country code and number of your priority application, to be used for filing abroad under the Paris Convention, is **US 11/977,487**

Projected Publication Date: Not Applicable

Non-Publication Request: No

Early Publication Request: No

Title

BLOCK COPOLYMERS CONTAINING FUNCTIONAL GROUPS

Preliminary Class

525

PROTECTING YOUR INVENTION OUTSIDE THE UNITED STATES

Since the rights granted by a U.S. patent extend only throughout the territory of the United States and have no effect in a foreign country, an inventor who wishes patent protection in another country must apply for a patent in a specific country or in regional patent offices. Applicants may wish to consider the filing of an international application under the Patent Cooperation Treaty (PCT). An international (PCT) application generally has the same effect as a regular national patent application in each PCT-member country. The PCT process **simplifies** the filing of patent applications on the same invention in member countries, but **does not result** in a grant of "an international patent" and does not eliminate the need of applicants to file additional documents and fees in countries where patent protection is desired.

Almost every country has its own patent law, and a person desiring a patent in a particular country must make an application for patent in that country in accordance with its particular laws. Since the laws of many countries differ in various respects from the patent law of the United States, applicants are advised to seek guidance from specific foreign countries to ensure that patent rights are not lost prematurely.

Applicants also are advised that in the case of inventions made in the United States, the Director of the USPTO must issue a license before applicants can apply for a patent in a foreign country. The filing of a U.S. patent application serves as a request for a foreign filing license. The application's filing receipt contains further information and guidance as to the status of applicant's license for foreign filing.

Applicants may wish to consult the USPTO booklet, "General Information Concerning Patents" (specifically, the section entitled "Treaties and Foreign Patents") for more information on timeframes and deadlines for filing foreign patent applications. The guide is available either by contacting the USPTO Contact Center at 800-786-9199, or it can be viewed on the USPTO website at http://www.uspto.gov/web/offices/pac/doc/general/index.html.

For information on preventing theft of your intellectual property (patents, trademarks and copyrights), you may wish to consult the U.S. Government website, http://www.stopfakes.gov. Part of a Department of Commerce initiative, this website includes self-help "toolkits" giving innovators guidance on how to protect intellectual property in specific countries such as China, Korea and Mexico. For questions regarding patent enforcement issues, applicants may call the U.S. Government hotline at 1-866-999-HALT (1-866-999-4158).

LICENSE FOR FOREIGN FILING UNDER

Title 35, United States Code, Section 184

Title 37, Code of Federal Regulations, 5.11 & 5.15

GRANTED

The applicant has been granted a license under 35 U.S.C. 184, if the phrase "IF REQUIRED, FOREIGN FILING LICENSE GRANTED" followed by a date appears on this form. Such licenses are issued in all applications where the conditions for issuance of a license have been met, regardless of whether or not a license may be required as

set forth in 37 CFR 5.15. The scope and limitations of this license are set forth in 37 CFR 5.15(a) unless an earlier license has been issued under 37 CFR 5.15(b). The license is subject to revocation upon written notification. The date indicated is the effective date of the license, unless an earlier license of similar scope has been granted under 37 CFR 5.13 or 5.14.

This license is to be retained by the licensee and may be used at any time on or after the effective date thereof unless it is revoked. This license is automatically transferred to any related applications(s) filed under 37 CFR 1.53(d). This license is not retroactive.

The grant of a license does not in any way lessen the responsibility of a licensee for the security of the subject matter as imposed by any Government contract or the provisions of existing laws relating to espionage and the national security or the export of technical data. Licensees should apprise themselves of current regulations especially with respect to certain countries, of other agencies, particularly the Office of Defense Trade Controls, Department of State (with respect to Arms, Munitions and Implements of War (22 CFR 121-128)); the Bureau of Industry and Security, Department of Commerce (15 CFR parts 730-774); the Office of Foreign AssetsControl, Department of Treasury (31 CFR Parts 500+) and the Department of Energy.

NOT GRANTED

No license under 35 U.S.C. 184 has been granted at this time, if the phrase "IF REQUIRED, FOREIGN FILING LICENSE GRANTED" DOES NOT appear on this form. Applicant may still petition for a license under 37 CFR 5.12, if a license is desired before the expiration of 6 months from the filing date of the application. If 6 months has lapsed from the filing date of this application and the licensee has not received any indication of a secrecy order under 35 U.S.C. 181, the licensee may foreign file the application pursuant to 37 CFR 5.15(b).

UNITED STATES PATENT AND TRADEMARK OFFICE

Commissioner for Patents
United States Patent and Trademark Office
P.O. Box 1450
Alexandria, VA 22313-1450
www.uspto.gov
DIW Aug-10

THEODORE L. HEYING
MGM INSTRUMENTS INC.
925 SHERMAN AVE.
HAMDEN CT 06514

MAILED
AUG 11 2010
OFFICE OF PETITIONS

In re Application of	:	
Leslie G. Hammer	:	
Application Number: 11/977523	:	
Filing Date: 10/24/2007	:	ON PETITION
For: SIMPLE DEVICE FOR	:	
COMPLETELY CONVERTING DIESEL	:	
FUEL INTO USEFUL ENERGY AND	:	
LITTLE CARBON EXHAUST	:	

This is a decision on the petition under 37 CFR 1.137(b), filed on May 7, 2010.

The petition is **GRANTED**.

This application became abandoned on April 6, 2009, for failure to file a timely reply to the Notice to File Missing Parts of Nonprovisional Application mailed on February 5, 2009, which set a two (2) month shortened period for reply. No extensions of the time for reply in accordance with 37 CFR 1.136(a) were obtained. Notice of Abandonment was mailed on October 15, 2009. On October 22, 2009, a paper styled as a petition under 37 CFR 1.137(a) was filed. On January 4, 2010, a decision dismissing the petition was mailed. On January 19, 2010, a paper styled as a petition under 37 CFR 1.137(b) was filed. On March 26, 2010, a letter decision dismissing the petition was mailed.

Receipt of the declaration under 37 CFR 1.63 and the petition fee is acknowledged.

It is not apparent whether the person signing the statement of unintentional delay was in a position to have firsthand or direct knowledge of the facts and circumstances of the delay at issue. Nevertheless, such statement is being treated as having been made

as the result of a reasonable inquiry into the facts and circumstances of such delay.[1] In the event that such an inquiry has not been made, petitioner must make such an inquiry. If such inquiry results in the discovery that it is not correct that the entire delay in filing the required reply from the due date for the reply until the filing of a grantable petition pursuant to 37 CFR 1.137(b) was unintentional, petitioner must notify the Office.

There is no indication that petitioner herein was ever empowered to prosecute the instant application. If petitioner desires to receive future correspondence regarding this application, the appropriate power of attorney documentation must be mailed. A courtesy copy of this decision will be mailed to petitioner. However, all future correspondence will be directed to the address of record until such time as appropriate instructions are received to the contrary.

The application is referred to the Office of Patent Application Processing for further processing.

Telephone inquiries related to this decision should be directed to the undersigned at 571-272-3231.

Douglas I. Wood
Senior Petitions Attorney
Office of Petitions

Cc: THOMAS E. CIESCO
DELIO & PETERSON, LLC
121 WHITNEY AVENUE
NEW HAVEN CT 06510-1241

[1] See 37 CFR 10.18(b) and Changes to Patent Practice and Procedure; Final Rule Notice, 62 Fed. Reg. 53131, 53178 (October 10, 1997), 1208 Off. Gaz. Pat. Office 63, 103 (October 21, 1997).

UNITED STATES PATENT AND TRADEMARK OFFICE

Commissioner for Patents
United States Patent and Trademark Office
P.O. Box 1450

STETINA BRUNDA GARRED & BRUCKER
75 ENTERPRISE, SUITE 250
ALISO VIEJO CA 92656

In re Application of	:	
Edward A. MILLER	:	DECISION ON PETITION
Application No. 11/977,546	:	TO MAKE SPECIAL UNDER
Filed: October 25, 2007	:	37 CFR 1.102(c)(1)

This is a decision on the petition under 37 CFR 1.102(c)(1), filed October 29, 2007, to make the above-identified application special based on applicant's age as set forth in M.P.E.P. § 708.02, Section IV.

The petition is **GRANTED**.

A grantable petition to make an application special under 37 CFR 1.102(c)(1) and MPEP § 708.02, Section IV: Applicant's Age must be accompanied by evidence showing that at least one of the applicants is 65 years of age, or more, such as a birth certificate or a statement by applicant. No fee is required

The instant petition includes the statement in the declaration attesting to the inventor's, Edward A. Miller, age. Accordingly, the above-identified application has been accorded "special" status.

General inquiries relating to this decision should be directed to Robert DeWitty, Petitions Examiner, Office of Petitions (571-272-8427).

The application file will be referred to the Office of Data Management for further processing.

Christopher Bottorff
Petitions Examiner
Office of Petitions

UNITED STATES PATENT AND TRADEMARK OFFICE

Commissioner for Patents
United States Patent and Trademark Office
P.O. Box 1450

MAILED

MAR 08 2011

OFFICE OF PETITIONS

STETINA BRUNDA GARRED & BRUCKER
75 ENTERPRISE, SUITE 250
ALISO VIEJO CA 92656

In re Application of	:	
Edward A. MILLER	:	DECISION ON PETITION
Application No. 11/977,546	:	TO MAKE SPECIAL UNDER
Filed: October 25, 2007	:	37 CFR 1.102(c)(1)

This is a decision on the petition under 37 CFR 1.102(c)(1), filed October 29, 2007, to make the above-identified application special based on applicant's age as set forth in M.P.E.P. § 708.02, Section IV.

The petition is **GRANTED**.

A grantable petition to make an application special under 37 CFR 1.102(c)(1) and MPEP § 708.02, Section IV: Applicant's Age must be accompanied by evidence showing that at least one of the applicants is 65 years of age, or more, such as a birth certificate or a statement by applicant. No fee is required

The instant petition includes the statement in the declaration attesting to the inventor's, Edward A. Miller, age. Accordingly, the above-identified application has been accorded "special" status.

General inquiries relating to this decision should be directed to Robert DeWitty, Petitions Examiner, Office of Petitions (571-272-8427).

The application file will be referred to the Office of Data Management for further processing.

Christopher Bottorff
Petitions Examiner
Office of Petitions

UNITED STATES PATENT AND TRADEMARK OFFICE

Commissioner for Patents
United States Patent and Trademark Office
P.O. Box 1450
Alexandria, VA 22313-1450
www.uspto.gov

CONNOLLY BOVE LODGE & HUTZ, LLP
P O BOX 2207
WILMINGTON, DE 19899

MAILED

FEB 09 2011

OFFICE OF PETITIONS

In re Application of:	:	
Pudleiner et al.	:	
Application No. 11/977,586	:	DECISION ON PETITION
Filed: October 25, 2007	:	
Attorney Docket No. 15778-00020-US	:	

This is a decision on the petition, filed September 2, 2008, which is being treated as a petition under 37 CFR 1.181 (no fee) requesting withdrawal of the holding of abandonment in the above-identified application. Alternatively, petitioner also seeks a petition under the unintentional provisions of 37 CFR 1.137(b).

The petition under 1.181 is **DISMISSED**.

This application was held abandoned for failure to reply in a timely manner to the Notice to File Missing Parts of Nonprovisional Application mailed December 3, 2007. A Notice of Abandonment was mailed August 13, 2008.

Petitioner asserts that the Notice dated December 3, 2007, was not received.

A review of the written record indicates no irregularity in the mailing of the Notice and in the absence of any irregularity, there is a strong presumption that the Office action was properly mailed to the practitioner at the address of record. This presumption may be overcome by a showing that the Notice was not in fact received. In this regard, the showing required to establish the failure to receive the Office action must consist of the following:

1. a statement from practitioner stating that the Notice was not received by the practitioner at the correspondence address of record;

2. a statement from the practitioner attesting to the fact that a search of the file jacket and docket records indicates that the Notice was not received; and

3. a copy of the docket record where the non-received Notice would have been entered and docketed had it been received must be attached to and referenced in the practitioner' statement.

The petition lacks items (1) and (2) above.

In regards to item (1), only a statement by a practitioner will be accepted attesting that the Notice was not received. Therefore the declaration of Donna Veatch cannot be accepted.

In regards to item (2), only a statement by practitioner will be accepted attesting that a search of the file jacket and docket records was conducted and that the Notice was not received.

See MPEP § 711.03(c) under subheading "Petition to Withdraw Holding of Abandonment Based on Failure to Receive Office Action," and "Withdrawing the Holding of Abandonment When Office Actions Are Not Received," 1156 Official Gazette 53 (November 16, 1993).

The petition under 1.137(b) is **GRANTED**.

The petition satisfies the requirements of 37 CFR 1.137(b) in that petitioner has supplied (1) the reply in the form of a declaration and surcharge of $130, (2) the petition fee of $1,620, and (3) a proper statement of unintentional delay.

This application is being referred to the Office of Patent Application Processing (OPAP) for pre-examination processing of the response submitted July 18, 2008.

Telephone inquiries concerning this decision should be directed to Alicia Kelley at (571) 272-6059. Telephone inquiries related to OPAP processing should be directed to their hotline at (571) 272-4000.

/Carl Friedman/
Carl Friedman
Petitions Examiner
Office of Petitions

UNITED STATES PATENT AND TRADEMARK OFFICE

Commissioner for Patents
United States Patent and Trademark Office
P.O. Box 1450
Alexandria, VA 22313-1450
www.uspto.gov

Howard IP Law Group
P.O. Box 226
Fort Washington, PA 19034

MAILED

OCT 15 2010

OFFICE OF PETITIONS

In re Application of
Byron W. TIETJEN
Application No. 11/977,639
Filed: October 25, 2007
Attorney Docket No. **OR-07783**

DECISION GRANTING PETITION
UNDER 37 CFR 1.313(c)(2)

This is a decision on the petition under 37 CFR 1.313(c)(2), filed October 15, 2010, to withdraw the above-identified application from issue after payment of the issue fee.

The petition is **GRANTED**.

The above-identified application is withdrawn from issue for consideration of a submission under 37 CFR 1.114 (request for continued examination). *See* 37 CFR 1.313(c)(2).

Petitioner is advised that the issue fee paid on September 16, 2010 cannot be refunded. If, however, this application is again allowed, petitioner may request that it be applied towards the issue fee required by the new Notice of Allowance.[1]

Telephone inquiries should be directed to the undersigned at (571) 272-7253.

This application is being referred to Technology Center AU 3662 for processing of the request for continued examination under 37 CFR 1.114 and for consideration of the concurrently filed request for correction of inventorship.

/Monica A. Graves/
Petitions Examiner, Office of Petitions

[1] *The request to apply the issue fee to the new Notice may be satisfied by completing and returning the new Part B – Fee(s) Transmittal Form (along with any balance due at the time of submission). Petitioner is advised that the Issue Fee Transmittal Form* ***must*** *be completed and timely submitted to avoid abandonment of the application.*

UNITED STATES PATENT AND TRADEMARK OFFICE

Commissioner for Patents
United States Patent and Trademark Office
P.O. Box 1450
Alexandria, VA 22313-1450
www.uspto.gov

MCCARTER & ENGLISH, LLP / ABBOTT LABORATORIES LTD.
265 FRANKLIN STREET
BOSTON MA 02110

MAILED
SEP 08 2011
OFFICE OF PETITIONS

In re Application	:	
David W. Borhani et al.	:	
Application No. 11/977,677	:	DECISION ON APPLICATION
Filed: October 25, 2007	:	FOR PATENT TERM ADJUSTMENT
Attorney Docket No. **117813-21602**	:	

This is in response to the "APPLICATION FOR PATENT TERM ADJUSTMENT INCLUDING REQUEST FOR RECONSIDERATION UNDER 37 C.F.R. § 1.705(b)" filed September 6, 2011. Applicant requests that the determination of patent term adjustment be corrected from 553 days to 901 days.

As the instant application for patent term adjustment requests reconsideration of the patent term adjustment as it relates to the Office's failure to issue the patent within three years of the filing date, the application for patent term adjustment under 37 CFR 1.705(b) is **DISMISSED as PREMATURE**.

Knowledge of the actual date the patent issues is required to calculate the amount, if any, of additional patent term patentees are entitled to for Office failure to issue the patent within three years. See 37 CFR 1.702(b). (This is true even where a request for continued examination (RCE) was filed). The computer will not undertake the § 1.702(b) calculation until the actual date of issuance of the patent has been determined. Likewise, the computer will not calculate any further Office delay under 37 CFR 1.702(a)(4) or applicant delay under 37 CFR 1.704(c)(10) until the actual date of issuance of the patent has been determined. As such, the Office cannot make a determination on the correctness of the patent term adjustment until the patent has issued.

Requesting reconsideration of the patent term adjustment to be indicated on the patent under 37 CFR 1.705(b) based on the initial determination of patent term adjustment and a projected issuance date of the patent (or even the filing date of the request for continued examination) is premature. Accordingly, it is appropriate to dismiss such a request as premature.

Rather than file an application for patent term adjustment under 37 CFR 1.705(b) contesting the 37 CFR 1.702(b) calculation at the time of the mailing of the notice of

allowance, applicants are advised that they may wait until the time of the issuance of the patent and file a request for reconsideration of the patent term adjustment pursuant to 37 CFR 1.705(d). As the USPTO does not calculate the amount of time earned pursuant to 37 CFR 1.702(b) until the time of the issuance of the patent, the Office will consider any request for reconsideration of the patent term adjustment due to an error in the calculation of 37 CFR 1.702(b) to be timely if the request for reconsideration is filed within two months of the issuance of the patent. However, as to all other bases for contesting the initial determination of patent term adjustment received with the notice of allowance, applicants must timely file an application for patent term adjustment prior to the payment of the issue fee.[1]

To the extent that applicant otherwise requests correction of the patent term adjustment at the time of the mailing of the Notice of Allowance, the application for patent term adjustment is **GRANTED**.

The Office has updated the PALM screen to reflect that the correct Patent Term Adjustment (PTA) determination at the time of the mailing of the Notice of Allowance is four hundred eighty-nine (489) days including an additional sixty-two days for applicant delay. A copy of the updated PALM screen, showing the correct determination, is enclosed.

The instant application for patent term adjustment was timely filed[2] on or before payment of the issue fee.

On March 9, 2011, applicants filed a response to the non-Final Office Action mailed December 9, 2010. Then on May 10, 2011, applicants filed a Supplemental Response. Pursuant to 37 CFR § 1.704(c)(8), the submission of a supplemental reply or other paper, other than a supplemental reply or other paper expressly requested by the examiner, after a reply has been filed, is a failure to engage in reasonable efforts to conclude prosecution.

Applicants argue that the correct period of adjustment for the Supplemental Response filed May 10, 2011 is 62 days, not 0 days as determined by the office. The Supplemental Response was received by the Patent Office on May 10, 2011, 62 days after the receipt of the initial response.

---

[1] For example, if applicants dispute both the calculation of patent term adjustment under 37 CFR 1.702(a)(1) for Office failure to mail a first Office action or notice of allowance not later than fourteen months after the date on which the application was filed, and under 37 CFR 1.702(b) for Office failure to issue a patent within three years of the actual filing date of the application, then applicants must still timely file an application for patent term adjustment prior to the payment of the issue fee to contest the calculation of Office delay in issuing a first Office action or notice of allowance. See 37 CFR 1.705(b) and 35 U.S.C. 154(b)(3)(B). A dispute as to the calculation of the § 1.702(a)(1) period raised on request for reconsideration of patent term adjustment under 37 CFR 1.705(d) will be dismissed as untimely filed.

[2] PALM records indicate that the issue fee was paid on September 6, 2011.

Pursuant to 37 CFR § 1.704(c), circumstances that constitute a failure of the applicant to engage in reasonable efforts to conclude processing or examination of an application also include the following circumstances, which will result in the following reduction of the period of adjustment set forth in § 1.703 to the extent that the periods are not overlapping:

> (8) Submission of a supplemental reply or other paper, other than a supplemental reply or other paper expressly requested by the examiner, after a reply has been filed, is a failure to engage in reasonable efforts to conclude prosecution.

Applicants are correct that the Patent Term Adjustment should be reduced by an additional 62 days of applicants' delay, in accordance with 37 CFR 1.704(c)(8) for the filing of a Supplemental Response on May 10, 2011.

In view thereof, it is concluded that the determination of patent term adjustment at the time of the mailing of the Notice of Allowance is 489 days.

The Office has updated the PALM screen to reflect that the correct Patent Term Adjustment (PTA) determination at the time of the mailing of the Notice of Allowance is four hundred eighty-nine **(489)** days. A copy of the updated PALM screen, showing the correct determination, is enclosed.

The application is being forwarded to the Office of Data Management for issuance of the patent. The patent term adjustment indicated on the patent (as shown on the Issue Notification mailed about three weeks prior to patent issuance) will include any additional adjustment accrued both for Office delay in issuing the patent more than four months after payment of the issue fee and satisfaction of all outstanding requirements, and for the Office taking in excess of three years to issue the patent (to the extent that the three-year period does not overlap with periods already accorded).

Telephone inquiries specific to this decision should be directed to the undersigned at (571) 272-3212.

Patricia Faison-Ball

Patricia Faison-Ball
Senior Petitions Attorney
Office of Petitions

Enclosure: Copy of Revised PALM Screen

11/977,677	CRYSTALLINE ANTI-HTNFALPHA ANTIBODIES	117813-21602	09-08-2011::12:07:59

Patent Term Adjustments

Patent Term Adjustment (PTA) for Application Number: 11/977,677

Filing or 371(c) Date:	10-25-2007	Overlapping Days Between {A and B} or {A and C}:	0
Issue Date of Patent:	-	Non-Overlapping USPTO Delays:	552
A Delays:	552	PTO Manual Adjustments:	-62
B Delays:	0	Applicant Delays:	1
C Delays:	0	Total PTA Adjustments:	489

Patent Term Adjustment History **Explanation Of Calculations**

Number	Date	Contents Description	PTO(Days)	APPL (Days)	Start
80	09-08-2011	Adjustment of PTA Calculation by PTO		62	0
61	06-03-2011	Mail Notice of Allowance			0
60	06-02-2011	Office Action Review			0
59	06-02-2011	Office Action Review			0
58	06-02-2011	Office Action Review			0
57	06-02-2011	Issue Revision Completed			0
56	06-02-2011	Document Verification			0
55	06-02-2011	Notice of Allowance Data Verification Completed			0
54	06-02-2011	Case Docketed to Examiner in GAU			0
53	05-10-2011	Reference capture on IDS			0
52	05-17-2011	Reasons for Allowance			0
51	05-17-2011	Examiner's Amendment Communication			0
50	05-17-2011	Allowability Notice			0
49	05-10-2011	Information Disclosure Statement (IDS) Filed			0
48	03-09-2011	Information Disclosure Statement considered			0
47	03-09-2011	Information Disclosure Statement considered			0
46	05-10-2011	Information Disclosure Statement considered			0
45	05-10-2011	Information Disclosure Statement (IDS) Filed			0
44	03-09-2011	Reference capture on IDS			0
43	03-09-2011	Information Disclosure Statement (IDS) Filed			0
42	03-09-2011	New or Additional Drawing Filed			0
41	03-10-2011	Date Forwarded to Examiner			0
40	03-09-2011	Response after Non-Final Action			0
39	03-09-2011	Information Disclosure Statement (IDS) Filed			0
38	03-09-2011	Information Disclosure Statement (IDS) Filed			0
37	12-09-2010	Mail Non-Final Rejection			0
36	09-15-2010	Non-Final Rejection			0
34	08-31-2010	Information Disclosure Statement considered			0
33	08-31-2010	Information Disclosure Statement considered			0
30	08-31-2010	Reference capture on IDS			0
29	08-31-2010	Information Disclosure Statement (IDS) Filed		1	27
28	09-01-2010	Date Forwarded to Examiner			0
27	08-30-2010	Response to Election / Restriction Filed			0
26	08-30-2010	Request for Extension of Time - Granted			0
25	08-31-2010	Information Disclosure Statement (IDS) Filed			0
24	08-31-2010	Information Disclosure Statement (IDS) Filed			0
23	06-30-2010	Mail Restriction Requirement	552		0.5
22	06-30-2010	Restriction/Election Requirement			0
21	06-28-2010	Case Docketed to Examiner in GAU			0
20	01-29-2008	Preliminary Amendment			0
19	02-17-2010	Change in Power of Attorney (May Include Associate POA)			0

18	02-16-2010	Correspondence Address Change	0
17	02-11-2010	PG-Pub Issue Notification	0
16	11-06-2009	Application Dispatched from OIPE	0
15	11-04-2009	Sent to Classification Contractor	0
14	11-04-2009	Filing Receipt - Updated	0
13	10-13-2009	Additional Application Filing Fees	0
12	10-13-2009	CRF Disk Has Been Received by Preexam / Group / PCT	0
11	10-13-2009	A statement by one or more inventors satisfying the requirement under 35 USC 115, Oath of the Applic	0
10	10-28-2009	CRF Is Good Technically / Entered into Database	0
9	07-01-2009	CRF Does Not Match Application Specification -- Applicant Must Correct	0
8	07-13-2009	Notice Mailed--Application Incomplete--Filing Date Assigned	0
7	07-13-2009	Filing Receipt	0
6	10-25-2007	CRF Disk Has Been Received by Preexam / Group / PCT	0
4	11-08-2007	Cleared by OIPE CSR	0
3	11-01-2007	IFW Scan & PACR Auto Security Review	0
1	10-26-2007	Initial Exam Team nn	0
0.5	10-25-2007	Filing date	0

Close Window

UNITED STATES PATENT AND TRADEMARK OFFICE

Commissioner for Patents
United States Patent and Trademark Office
P.O. Box 1450
Alexandria, VA 22313-1450
www.uspto.gov

MAILED

JAN 04 2012

OFFICE OF PETITIONS

MCCARTER & ENGLISH, LLP / ABBOTT LABORATORIES LTD.
265 FRANKLIN STREET
BOSTON MA 02110

In re Patent No. 8,034,906
Issued: October 11, 2011
Application No. 11/977,677
Filed: October 25, 2007
Attorney Docket No. 117813-21602

:DECISION ON REQUEST
: FOR RECONSIDERATION
: OF PATENT TERM ADJUSTMENT
: AND
: NOTICE OF INTENT TO ISSUE
: CERTIFICATE OF CORRECTION

This is a decision on the APPLICATION FOR PATENT TERM ADJUSTMENT, filed December 9, 2011.

The request for review of the patent term adjustment is **GRANTED** to the extent indicated herein.

The patent term adjustment indicated in the patent is to be corrected by issuance of a certificate of correction showing a revised Patent Term Adjustment of EIGHT HUNDRED FORTY (840) days.

Patentees are given **THIRTY (30) DAYS or ONE (1) MONTH, whichever is longer,** from the mail date of this decision to respond. No extensions of time will be granted under § 1.136.

On October 11, 2011, the above-identified application matured into U.S. Patent No. 8,034,906 with a patent term adjustment of 837 days. On December 9, 2011, Patentees submitted the instant application. Applicants dispute the reduction of 3 days for the payment of the issue fee on September 9, 2011. The USPTO mailed the Notice of Allowance on June 3, 2011. The three month response date fell on Saturday, September 3, 2011, which was a weekend day. The applicants filed the response on September 6, 2011, the next business day, as September 5, 2011 was a holiday.

In Arqule v. Kappos, _ F.Supp.2d _ (D.D.C. 2011), the District Court of the District of Columbia ruled that the 35 U.S.C. § 21 (b) "weekend add holiday" exception applies to "any action" including the § 154(b)(2)(C) Accordingly, because September 3, 2011 was a Saturday, the time period to calculate Applicant delay commenced on September 6, 2011 rather than September 3, 2011. Therefore, a delay of 3 days was accrued, corresponding to the time period between September 3, 2011 (three months after the

mailing date of the Notice of Allowance, in accordance with 37 CFR §1.704(b)) and September 6, 2011. Applicants respectfully request the Office to remove the 3 days of Applicant delay and correct the total Applicant delay from 3 days to 0 days.

The reduction is being reconsidered and, based upon the decision in the Arqule case, it is determined that entry of a reduction for this reply timely filed pursuant to 35 U.S.C. §21(b) is not warranted. Accordingly, the period of reduction of 3 days is being removed.

Thus, instead of a 3 day reduction for applicant delay pursuant to 37 C.F.R. §1.704(b), 0 days should have been accorded for applicant delay.

As such, since the patent has now issued, the patent term adjustment is 840 days (552 "A delay days" + 351 "B delay days - 63 applicant delay days), not 837 days.

The Office acknowledges submission of the $200.00 fee set forth in 37 CFR 1.18(e) for consideration of the application for patent term adjustment under 37 CFR 1.705(b).

The Office will *sua sponte* issue a certificate of correction. Pursuant to 37 CFR 1.322, the Office will not issue a certificate of correction without first providing assignee or patentee an opportunity to be heard. Accordingly, patentees are given **one (1) month or thirty (30) days**, whichever is longer, from the mail date of this decision to respond. No extensions of time will be granted under § 1.136.

The application is being forwarded to the Certificates of Branch for issuance of a certificate of correction. The Office will issue a certificate of correction indicating that the term of the above-identified patent is extended or adjusted by **eight hundred forty (840)** days.

Telephone inquiries specific to this decision should be directed to the undersigned Petitions Attorney at (571) 272-3212.

Patricia Faison-Ball

Patricia Faison-Ball
Senior Petitions Attorney
Office of Petitions

Enclosure: Copy of DRAFT Certificate of Correction

DRAFT

UNITED STATES PATENT AND TRADEMARK OFFICE

CERTIFICATE OF CORRECTION

PATENT : 8,034,906 B2

DATED : October 11, 2011

INVENTOR(S) : David W. Borhani

It is certified that error appears in the above-identified patent and that said Letters Patent is hereby corrected as shown below:

On the cover page,

[*] Notice: Subject to any disclaimer, the term of this patent is extended or adjusted under 35 USC 154(b) by (837) days

Delete the phrase "by 837 days" and insert – by 840 days--

UNITED STATES PATENT AND TRADEMARK OFFICE

Commissioner for Patents
United States Patent and Trademark Office
P.O. Box 1450
Alexandria, VA 22313-1450
www.uspto.gov

GEORGE LEE SIACK
7377 BROOKMOOR DRIVE
WARRENTON VA 20187

MAILED
MAR 28 2011
OFFICE OF PETITIONS

In re Application of	:	
George Lee Slack	:	
Application No. 11/977,689	:	DECISION ON PETITION
Filed: October 25, 2007	:	
	:	

This is a decision on the renewed petition under the unintentional provisions of 37 CFR 1.137(b), filed March 2, 2011, to revive the above-identified application.

The petition is **GRANTED**.

The application became abandoned for failure to reply in a timely manner to the non-final Office action mailed, April 1, 2009, which set a shortened statutory period for reply of three (3) months. No extensions of time under the provisions of 37 CFR 1.136(a) were obtained. Accordingly, the application became abandoned on July 2, 2009. The Notice of Abandonment was mailed October 5, 2009.

The petition satisfies the requirements of 37 CFR 1.137(b) in that petitioner has supplied (1) the reply in the form of an amendment, (2) the petition fee of $810, and (3) a proper statement of unintentional delay.

Telephone inquiries concerning this decision should be directed to Terri Johnson at (571) 272-2991.

This application is being referred to Technology Center AU 3724 for appropriate action by the Examiner in the normal course of business on the reply received.

/Terri Johnson/
Terri Johnson
Petitions Examiner
Office of Petitions

UNITED STATES PATENT AND TRADEMARK OFFICE

UNITED STATES DEPARTMENT OF COMMERCE
United States Patent and Trademark Office
Address: COMMISSIONER FOR PATENTS
P.O. Box 1450
Alexandria, Virginia 22313-1450
www.uspto.gov

APPLICATION NO.	FILING DATE	FIRST NAMED INVENTOR	ATTORNEY DOCKET NO.	CONFIRMATION NO.
11/977,728	10/25/2007	Myles G. Megdal	EXP.017A2CP6	3164

20995 7590 08/11/2010
KNOBBE MARTENS OLSON & BEAR LLP
2040 MAIN STREET
FOURTEENTH FLOOR
IRVINE, CA 92614

EXAMINER
COLBERT, ELLA

ART UNIT	PAPER NUMBER
3694	

NOTIFICATION DATE	DELIVERY MODE
08/11/2010	ELECTRONIC

Please find below and/or attached an Office communication concerning this application or proceeding.

The time period for reply, if any, is set in the attached communication.

Notice of the Office communication was sent electronically on above-indicated "Notification Date" to the following e-mail address(es):

jcartee@kmob.com
efiling@kmob.com
eOAPilot@kmob.com

UNITED STATES PATENT AND TRADEMARK OFFICE

Commissioner for Patents
United States Patent and Trademark Office
P.O. Box 1450
Alexandria, VA 22313-1450
www.uspto.gov

AUG 10 2010

KNOBBE MARTENS OLSON & BEAR LLP
2040 MAIN STREET
FOURTEENTH FLOOR
IRVINE CA 92614

In re Application of	: DECISION ON PETITION
Myles MEGDAL et al.	: UNDER 37 CFR 1.181
Application No. 11/977,728	:
Filed: October 25, 2007	:
For: METHOD AND APPARATUS FOR	:
DEVELOPMENT AND USE OF A CREDIT	:
SCORE BASED ON SPEND CAPACITY	:

This is in response to applicants' petition under 37 CFR 1.181 filed March 22, 2010 to request returning the application to the examination docket.

The petition is **DISMISSED AS MOOT**.

Applicants allege that the Office has improperly designated the current application as abandoned due to the fact that a communication mailed to applicants on August 13, 2009 was erroneously treated as an Office action.

A review of the record reveals that applicant filed an amendment on June 3, 2009 in responding to the non-final Office action mailed on December 3, 2008. Subsequently, applicant filed a request for a six month suspension on July 20, 2009 which was granted on August 13, 2009. Applicants filed this petition on March 22, 2010. The examiner issued a final Office action on May 26, 2010. In view of the fact that the current application is presently in an active status in the examiner's rejected docket with the issuance of the May 26, 2010 Office action, the issue raised in the petition is dismissed as moot.

Any questions regarding this decision should be directed to Quality Assurance Specialist Lanna Mai at (571) 272-6867.

Wynn Coggins, Director
Technology Center 3600
(571) 272-5350

lm: 8/5/10
LM

UNITED STATES PATENT AND TRADEMARK OFFICE

Commissioner for Patents
United States Patent and Trademark Office
P.O. Box 1450
Alexandria, VA 22313-1450
www.uspto.gov

BRACEWELL & GIULIANI LLP
P.O. BOX 61389
HOUSTON TX 77208-1389

MAILED

FEB 16 2011

OFFICE OF PETITIONS

In re Application of	:	
James et al.	:	DECISION ON PETITION
Application No. 11/977,760	:	TO WITHDRAW
Filed: October 26, 2007	:	FROM RECORD
Attorney Docket No. 027435.000073	:	

This is a decision on the request to withdraw as attorney of record under 37 C.F.R. § 1.36, filed January 13, 2011.

The request is **NOT APPROVED**.

A grantable request to withdraw as attorney/agent of record must be signed by every attorney/agent seeking to withdraw or contain a clear indication that one attorney is signing on behalf of another/others.

The request was signed by Constance G. Rhebergen on behalf of all attorneys of record associated with Customer Number 35979. However, since the practitioners were not appointed by a Customer Number upon filing of the instant application, petitioner may not withdraw the practitioners by Customer Number.

Further, the Office will only accept correspondence address changes to the most current address information provided for the assignee of the entire interest *who properly became of record under 37 CFR 3.71,* or, if no assignee of the entire interest has properly been made of record, the most current address information provided for the first named inventor. 37 CFR 3.71(c) states:

> ***An assignee becomes of record either in a national patent application or a reexamination proceeding by filing a statement in compliance with § 3.73(b) that is signed by a party who is authorized to act on behalf of the assignee.***

Therefore, as there is currently no Statement under 37 CFR 3.73(b) of record in the instant application, the Office cannot change the correspondence address to the address on the Request to Withdraw. Accordingly, all future communications from the Office will continue to be directed to the address listed below until otherwise notified by applicant.

Currently, a Notice of Allowance was mailed January 20, 2011 in the above-identified application that requires a reply.

Telephone inquires concerning this decision should be directed to the undersigned at (571) 272-7751.

Joan Olszewski
Petitions Examiner
Office of Petitions

UNITED STATES PATENT AND TRADEMARK OFFICE

Commissioner for Patents
United States Patent and Trademark Office
P.O. Box 1450
Alexandria, VA 22313-1450
www.uspto.gov

Pulse-Link, Inc.
2270 Camino Vida Robie
Suite E
Carlsbad CA 92008

MAILED

AUG 2 6 2010

OFFICE OF PETITIONS

In re Application of	:	
Ismail Lakkis	:	
Application No. 11/977,825	:	DECISION ON PETITION
Filed: October 26, 2007	:	
Attorney Docket No. 00328	:	

This is a decision on the renewed petition under the unintentional provisions of 37 CFR 1.137(b), filed June 30, 2010, to revive the above-identified application.

The petition is **GRANTED**.

The application became abandoned for failure to reply in a timely manner to the non-final Office action mailed July 24, 2008, which set a shortened statutory period for reply of three (3) months. No extensions of time under the provisions of 37 CFR 1.136(a) were obtained. Accordingly, the application became abandoned on October 25, 2008. A Notice of Abandonment was mailed on February 11, 2009.

The petition satisfies the requirements of 37 CFR 1.137(b) in that petitioner has supplied (1) the reply in the form of an amendment, (2) the petition fee of $810 and (3) a proper statement of unintentional delay. Accordingly, the amendment is accepted as being unintentionally delayed.

A one month extension of time is needed to make the reply timely filed. As authorized the fee in the amount of $65.00 will be charged to petitioner's deposit account.

Telephone inquiries concerning this decision should be directed to Kimberly Inabinet at (571) 272-4618.

This application is being referred to Technology Center AU 2611 for appropriate action by the Examiner in the normal course of business on the reply received February 16, 2010.

/Kimberly Inabinet/

Kimberly Inabinet
Petitions Examiner
Office of Petitions

UNITED STATES PATENT AND TRADEMARK OFFICE

Commissioner for Patents
United States Patent and Trademark Office
P.O. Box 1450
Alexandria, VA 22313-1450
www.uspto.gov

AMGEN INC.
MAIL STOP 28-2-C
ONE AMGEN CENTER DRIVE
THOUSAND OAKS CA 91320-1799

MAILED

MAY 23 2011

OFFICE OF PETITIONS

In re Application of	:	
Joan C. Egrie et al.	:	
Application No. 11/977,845	:	DECISION ON PETITION
Filed: October 26, 2007	:	
Attorney Docket No. **A-460G**	:	

This is a decision on the petition under the unintentional provisions of 37 CFR 1.137(b), filed March 23, 2011, to revive the above-identified application.

The petition is **GRANTED**.

This application became abandoned for failure to timely pay the issue and publication fees on or before March 10, 2011, as required by the Notice of Allowance and Fee(s) Due, mailed December 10, 2010. Accordingly, the date of abandonment of this application is March 11, 2011.

The petition satisfies the requirements of 37 CFR 1.137(b) in that petitioner has supplied (1) the reply in the form of payment of the issue fee of $1510 and the publication fee of $300, (2) the petition fee of $1620; and (3) a proper statement of unintentional delay. Accordingly, the Issue Fee is accepted as having been unintentionally delayed.

Telephone inquiries concerning this decision should be directed to Tredelle Jackson at (571) 272-2783.

This application is being referred to the Office of Data Management for processing into a patent.

Ramesh Krishnamurthy
Petitions Examiner
Office of Petitions

UNITED STATES PATENT AND TRADEMARK OFFICE

UNITED STATES DEPARTMENT OF COMMERCE
United States Patent and Trademark Office
Address: COMMISSIONER FOR PATENTS
P.O. Box 1450
Alexandria, Virginia 22313-1450
www.uspto.gov

APPLICATION NO.	FILING DATE	FIRST NAMED INVENTOR	ATTORNEY DOCKET NO.	CONFIRMATION NO.
11/977,873	10/26/2007	Ronald H. Micheels	PTI-005-USA-P	3859

27955 7590 08/05/2010
TOWNSEND & BANTA
c/o PORTFOLIO IP
PO BOX 52050
MINNEAPOLIS, MN 55402

EXAMINER
SUGLO, JANET L

ART UNIT	PAPER NUMBER
2857	

MAIL DATE	DELIVERY MODE
08/05/2010	PAPER

Please find below and/or attached an Office communication concerning this application or proceeding.

The time period for reply, if any, is set in the attached communication.

UNITED STATES PATENT AND TRADEMARK OFFICE

Commissioner for Patents
United States Patent and Trademark Office
P.O. Box 1450
Alexandria, VA 22313-1450
www.uspto.gov

In re Application of Micheels et al.
Appl. No.: 11/977873
Filed: October 26, 2007
For: Optical System and method for Inspection and Characterization of Liquids in Vessels

DECISION ON PETITION
37 CFR 1.84(a)(2)

This decision is in response to the petition filed May 5, 2008 in the above-identified application. Petitioner request that color drawings be accepted in accordance with 37 C.F.R. 1.84 (a)(2).

The petition states that Figures 4-11, 13-18, 20 and 21 are color drawings, necessary in this application as the only practical medium by which to disclose the subject matter sought to be patented and are necessary because they would not be as clearly distinguishable in black and white. The color photographs illustrate the difference in spectral absorbance vs. visual appearance for liquids having the same or very similar visible color. The petition complies with 37 C.F.R. 1.84 (a)(2) in that it was accompanied by (1) the appropriate fee and (2) at least three sets of color drawings. The original specification, amended on May 5, 2008, also contains the statement required as set forth in 37 C.F.R. 1.84 (a)(2) (iii).

Having met all requirements set forth in 37 C.F.R. 1.84 (a)(2), the petition is granted.

SUMMARY: The petition is **granted**. The application has been forwarded to the examiner in charge thereof for further action.

/Eliseo Ramos-Feliciano/
Supervisory Patent Examiner, Art Unit 2857

Eliseo Ramos-Feliciano
Supervisory Patent Examiner
Art Unit 2857
Patent Examining Technology Center 2800

TOWNSEND & BANTA
c/o PORTFOLIO IP
PO BOX 52050
MINNEAPOLIS, MN 55402

UNITED STATES PATENT AND TRADEMARK OFFICE

Commissioner for Patents
United States Patent and Trademark Office
P.O. Box 1450
Alexandria, VA 22313-1450
www.uspto.gov

MAILED

MAR 14 2011

OFFICE OF PETITIONS

HAVERSTOCK & OWENS LLP
162 N WOLFE ROAD
SUNNYVALE CA 94086

In re Application of Francis J. Cusack, Jr., et al. Application No. 11/977,887 Filed: October 26, 2007 Attorney Docket No. **VIDI-00100**	: : : : :	DECISION ON PETITION TO WITHDRAW FROM RECORD

This is a decision on the request to withdraw as attorney of record under 37 CFR § 1.36, filed February 2, 2011.

The request is **NOT APPROVED**.

The request cannot be approved because it lacks a forwarding correspondence address of the first named inventor or a properly intervening assignee.

If the forwarding correspondence address is to the assignee, the Office will only accept correspondence address changes to the most current address information provided for the assignee of the entire interest *that properly became of record under 37 CFR 3.71.* 37 CFR 3.71(c) states:

> *An assignee becomes of record either in a national patent application or a reexamination proceeding by filing a statement in compliance with § 3.73(b) that is signed by a party who is authorized to act on behalf of the assignee.*

The assignee must establish its ownership of the patent to the satisfaction of the Director. In this regard, the statement under 37 CFR 3.73(b) must have either: (i) documentary evidence of a chain of title from the original owner to the assignee (*e.g.*, copy of an executed assignment), and a statement affirming that the documentary evidence of the chain of title from the original owner to the assignee was or concurrently is being submitted for recordation pursuant to § 3.11; or (ii) a statement specifying where documentary evidence of a chain of title from the original owner to the assignee is recorded in the assignment records of the Office (*e.g.*, reel and frame number).

All future communications from the Office will continue to be directed to the above-listed address until otherwise notified by applicant.

Telephone inquires concerning this decision should be directed to the undersigned at (571) 272-2991.

Terri Johnson
Petitions Examiner
Office of Petitions

cc: **VIDIENT, LLC**
P.O. BOX 391600
MOUNTAIN VIEW, CA 94039-1600

UNITED STATES PATENT AND TRADEMARK OFFICE

Commissioner for Patents
United States Patent and Trademark Office
P.O. Box 1450
Alexandria, VA 22313-1450
www.uspto.gov

COHEN, PONTANI, LIEBERMAN & PAVANE LLP
551 FIFTH AVENUE
SUITE 1210
NEW YORK, NY 10176

MAILED
JUN 01 2011
OFFICE OF PETITIONS

In re Application of	:	
Hosel et al.	:	
Application No. 11/977,924	:	ON PETITION
Filing: October 26, 2007	:	
Attorney Docket No. 410002-468	:	

This is a decision on the petition under the unintentional provisions of 37 CFR 1.137(b), filed April 11, 2011, to revive the above-identified application.

The petition is **GRANTED**.

This application became abandoned for failure to timely pay the issue and publication fee(s) on or before August 17, 2010, as required by the Notice of Allowance and Fee(s) Due mailed May 17, 2010. Accordingly, the application became abandoned on August 18, 2010. A Notice of Abandonment was mailed March 28, 2011.

The petition satisfies the requirements of 37 CFR 1.137(b) in that petitioner has supplied (1) the reply in the form of payment of the issue fee of $1,510 and the publication fee of $300, (2) the petition fee of $1,620, and (3) a proper statement of unintentional delay.

Telephone inquiries concerning this decision should be directed to the undersigned at (571) 272-6059.

This application is being referred to the Office of Data Management for processing into a patent.

A. Kelley-Collier

Alicia Kelley-Collier
Petitions Examiner
Office of Petitions

UNITED STATES PATENT AND TRADEMARK OFFICE

Commissioner for Patents
United States Patent and Trademark Office
P.O. Box 1450
Alexandria, VA 22313-1450
www.uspto.gov

KNOBBE MARTENS OLSON & BEAR LLP
2040 MAIN STREET
FOURTEENTH FLOOR
IRVINE CA 92614

MAILED
APR 18 2012
OFFICE OF PETITIONS

In re Application of	:	
Gan et al.	:	
Application No. 11/978,026	:	ON PETITION
Filed: 10/26/2007	:	
Attorney Docket No. SKYWRKS.000GEN	:	

This is a decision on the petition under 37 CFR 1.137(b), filed January 24, 2012, to revive the application.

The petition is **GRANTED**.

The application became abandoned for failure to file a timely and proper reply within the meaning of 37 CFR 1.113 to the final Office action of January 25, 2010, which set a three-month shortened statutory period for response. No extension of the time for response was obtained pursuant to 37 CFR 1.136(a). Accordingly, the application became abandoned on April 26, 2010. A Notice of Abandonment was mailed on August 2, 2010.

The petition satisfies the requirements of 37 CFR 1.137(b) in that applicant has supplied (1) the reply in the form of a RCE, the RCE fee, and the submission required by 37 CFR 1.114; (2) the petition fee; and (3) a proper statement of unintentional delay.

This application is being referred to Technology Center AU 2813 for processing of the RCE and for appropriate action by the Examiner on the amendment submitted in accordance with 37 CFR 1.114.

Telephone inquiries concerning this decision should be directed to the undersigned at (571) 272-3211.

Christina Tartera Donnell

Christina Tartera Donnell
Senior Petitions Attorney
Office of Petitions

UNITED STATES PATENT AND TRADEMARK OFFICE

Commissioner for Patents
United States Patent and Trademark Office
P.O. Box 1450
Alexandria, VA 22313-1450
www.uspto.gov

Pulse-Link, Inc.
2270 Camino Vida Robie
Suite E
Carlsbad CA 92008

MAILED
JAN 31 2011
OFFICE OF PETITIONS

In re Application of	:	
Ismail Lakkis	:	
Application No. 11/978,050	:	DECISION ON PETITION
Filed: October 25, 2007	:	
Attorney Docket No. 00326	:	

This is a decision on the petition under the unintentional provisions of 37 CFR 1.137(b), filed January 10, 2011, to revive the above-identified application.

The petition is **DISMISSED**.

Any request for reconsideration of this decision must be submitted within TWO (2) MONTHS from the mail date of this decision. Extensions of time under 37 CFR 1.136(a) are permitted. The reconsideration request should include a cover letter entitled "Renewed Petition under 37 CFR 1.137(b)." This is **not** a final agency action within the meaning of 5 U.S.C. § 704.

This application became abandoned for failure to timely pay the issue and publication fees on or before December 18, 2009, as required by the Notice of Allowance and Fee(s) Due, mailed September 18, 2009. Accordingly, the date of abandonment of this application is December 19, 2009. A Notice of Abandonment was mailed on January 5, 2010.

A grantable petition under 37 CFR 1.137(b) must be accompanied by: (1) the required reply, unless previously filed; (2) the petition fee as set forth in 37 CFR 1.17(m); (3) a statement that the entire delay in filing the required reply from the due date for the reply until the filing of a grantable petition pursuant to 37 CFR 1.137(b) was unintentional; and **(4) any terminal disclaimer (and fee as set forth in 37 CFR 1.20(d)) required by 37 CFR 1.137(d)**. Where there is a question as to whether either the abandonment or the delay in filing a petition under 37 CFR 1.137 was unintentional, the Director may require additional information. See MPEP 711.03(c)(II)(C) and (D). The instant petition lacks items (2) and (3).

As to item (2), the check submitted for payment of the petition, issue and publication fees were returned for insufficient funds. There is a $50.00 service charge for processing payments refused by a financial institution. (37 CFR 1.21(m)).

As to item (3), the statement of unintentional delay of not acceptable because the petition was not signed.

Further correspondence with respect to this matter should be addressed as follows:

By Mail: Mail Stop PETITION
Commissioner for Patents
P. O. Box 1450
Alexandria, VA 22313-1450

By hand: U. S. Patent and Trademark Office
Customer Service Window, Mail Stop Petitions
Randolph Building
401 Dulany Street
Alexandria, VA 22314

The centralized facsimile number is **(571) 273-8300.**

Telephone inquiries concerning this decision should be directed to Kimberly Inabinet at (571) 272-4618.

/Kimberly Inabinet/

Kimberly Inabinet
Petitions Examiner
Office of Petitions

UNITED STATES PATENT AND TRADEMARK OFFICE

Commissioner for Patents
United States Patent and Trademark Office
P.O. Box 1450
Alexandria, VA 22313-1450
www.uspto.gov

Pulse-Link, Inc.
2270 Camino Vida Robie
Suite E
Carlsbad CA 92008

MAILED
MAR 14 2011
OFFICE OF PETITIONS

In re Application of	:	
Ismail Lakkis	:	
Application No. 11/978,050	:	DECISION ON PETITION
Filed: October 25, 2007	:	
Attorney Docket No. 00326	:	

This is a decision on the renewed petition under the unintentional provisions of 37 CFR 1.137(b), filed February 15, 2011, to revive the above-identified application.

The petition is **GRANTED**.

This application became abandoned for failure to timely pay the issue and publication fees on or before December 18, 2009, as required by the Notice of Allowance and Fee(s) Due, mailed September 18, 2009. Accordingly, the date of abandonment of this application is December 19, 2009. A Notice of Abandonment was mailed on January 5, 2010.

The petition satisfies the requirements of 37 CFR 1.137(b) in that petitioner has supplied (1) the reply in the form of payment of the issue fee of $755 and the publication fee of $300, (2) the petition fee of $810, and (3) a proper statement of unintentional delay. Accordingly, the issue and publication fees are accepted as being unintentionally delayed.

Telephone inquiries concerning this decision should be directed to Kimberly Inabinet at (571) 272-4618.

This application is being referred to the Office of Data Management for further processing into a patent.

/Kimberly A. Inabinet/

Kimberly A. Inabinet
Petitions Examiner
Office of Petitions

UNITED STATES PATENT AND TRADEMARK OFFICE

Commissioner for Patents
United States Patent and Trademark Office
P.O. Box 1450
Alexandria, VA 22313-1450
www.uspto.gov

LADAS & PARRY LLP
1040 Avenue of the Americas
NEW YORK NY 10018-3738

MAILED

APR 12 2011

OFFICE OF PETITIONS

In re Application of
Roy, et al.
Application No. 11/978,163
Deposited: October 26, 2007
Attorney Docket No. U 017065-1

ON PETITION

This is in response to the "PETITION TO WITHDRAW NOTICE OF INCOMPLETE NONPROVISIONAL APPLICATION" filed February 22, 2011, requesting that the above-referenced application be accorded a filing date of October 26, 2007. This petition is being treated pursuant to 37 CFR 1.53(e)(2)[1].

Application papers in the above-identified application were deposited on October 26, 2007. However, on December 20, 2010, the Office of Patent Application Processing mailed applicants a "Notice of Incomplete Nonprovisional Application," notifying applicants that the application papers had not been accorded a filing date because the application was deposited without drawings. In response, applicants timely filed this petition in which applicants assert drawings are not necessary for the understanding of the invention and request the Office accord a filing date of October 26, 2007 to the application as filed.

A review of the application confirms that, as filed, the application contained at least one method claim. MPEP 601.01(f) provides that:

> It has been USPTO practice to treat an application that contains at least one process or method claim as an application for which a drawing is not necessary for an understanding of the invention under 35 U.S.C. 113 (first sentence).

Pursuant to § 601.01(f), a drawing is not considered essential for a filing date. The instant application is entitled to a filing date *without* drawings present in the application. Accordingly, the Office should have granted the application a filing date and mailed a Notice of Omitted Items instead of a Notice of Incomplete Nonprovisional Application.

[1] Any request for review of a notification pursuant to paragraph (e)(1) of this section, or a notification that the original application papers lack a portion of the specification or drawing(s), must be by way of a petition pursuant to this paragraph accompanied by the fee set forth in § 1.17(f). In the absence of a timely (§ 1.181(f)) petition pursuant to this paragraph, the filing date of an application in which the applicant was notified of a filing error pursuant to paragraph (e)(1) of this section will be the date the filing error is corrected.

In view of the above, the "Notice" mailed December 20, 2010 was mailed in error and is hereby withdrawn. The application, as filed, is entitled to a filing date of October 26, 2007. The petition under 37 CFR 1.53(e)(2) is **granted**.

If applicants desire that the drawing figures be added to the application, the appropriate procedure is by way of amendment requesting entry of the figures. Any such amendment should be filed prior to the first action on the merits and the examiner will consider the figures for new matter.

Given the basis for granting this petition, the $130.00 petition fee filed with the instant petition is being refunded to deposit account no. 12-0425. For future reference, a filing date petition is $400.00, not $130.00.

Pursuant to this decision, the application will be referred to Office of Patent Application Processing for:

- **correction of the filing date to October 26, 2007**;
- **for indication in Office records, as appropriate, that "0" sheets of drawings were present on filing** and
- **for issuance of a filing receipt.**

Telephone inquiries specific to this matter should be directed to the undersigned at (571) 272-3230.

Shirene Willis Brantley

Shirene Willis Brantley
Senior Petitions Attorney
Office of Petitions

UNITED STATES PATENT AND TRADEMARK OFFICE

Commissioner for Patents
United States Patent and Trademark Office
P.O. Box 1450
Alexandria, VA 22313-1450
www.uspto.gov

MCDERMOTT WILL & EMERY LLP
600 13TH STREET, NW
WASHINGTON DC 20005-3096

MAILED
MAR 12 2012
OFFICE OF PETITIONS

In re Patent No. 7,822,887 :
Issue Date: 26 October,2010 :
Application No. 11/978,215 : ON PETITION
Filed: 26 October, 2007 :
Attorney Docket No. 069985-0069 :

This is a decision on the petition filed on 31 January, 2012, under 37 C.F.R. §1.27(g)(2) requesting that status as a Small Entity be removed.

NOTE:

In view of their duty of candor to the Office to properly inquire to ascertain the accuracy of representations made before the Office (*see*: 37 C.F.R. §1.4, §10.18, MPEP §410), Petitioners always are reminded of the responsibility to review their records and submit accurate information to the Office.

Petitioners also are reminded to chart out the fees paid/fees due/balance due in their submission(s) to the Office. (*See, generally*: 37 C.F.R. §1.27, §1.28, MPEP §509.02 and 509-03.)

Petitioner's submission is **ACCEPTED**.

In accordance with the request, status as a Small Entity will be removed, and Petitioner is required to pay fees at the schedule set forth for not-small entities. **The additional fees were charged as authorized.**

The availability of applications and application papers online to applicants/practitioners who diligently associate their Customer Number with the respective application(s) now provides an applicant/practitioner on-demand information as to events/transactions in an application.

Patent No. 7,822,887
Application No. 11/978,215

Out of an abundance of caution, Petitioners always are reminded that that those registered to practice and all others who make representations before the Office **must** inquire into the underlying facts of representations made to the Office and support averments with the appropriate documentation–since all owe to the Office the continuing duty to disclose.[1]

The instant application is released to the Office of Patent Application Processing (OPAP) for further processing in due course as is necessary before it is released for substantive examination.

Telephone inquiries regarding this decision may be directed to the undersigned at (571) 272-3214—it is noted, however, that all practice before the Office is in writing (see: 37 C.F.R. §1.2[2]) and the proper authority for action on any matter in this regard are the statutes (35 U.S.C.), regulations (37 C.F.R.) and the commentary on policy (MPEP). Therefore, no telephone discussion may be controlling or considered authority for Petitioner's action(s).

/John J. Gillon, Jr./
John J. Gillon, Jr.
Senior Attorney
Office of Petitions

---

[1] See supplement of 17 June, 1999. The Patent and Trademark Office is relying on Petitioner's duty of candor and good faith and accepting a statement made by Petitioner. See Changes to Patent Practice and Procedure, 62 Fed. Reg. at 53160 and 53178, 1203 Off. Gaz. Pat. Office at 88 and 103 (responses to comments 64 and 109)(applicant obligated under 37 C.F.R. §10.18 to inquire into the underlying facts and circumstances when providing statements to the Patent and Trademark Office).

[2] The regulations at 37 C.F.R. §1.2 provide:

§1.2 Business to be transacted in writing.

All business with the Patent and Trademark Office should be transacted in writing. The personal attendance of applicants or their attorneys or agents at the Patent and Trademark Office is unnecessary. The action of the Patent and Trademark Office will be based exclusively on the written record in the Office. No attention will be paid to any alleged oral promise, stipulation, or understanding in relation to which there is disagreement or doubt.

UNITED STATES PATENT AND TRADEMARK OFFICE

Commissioner for Patents
United States Patent and Trademark Office
P.O. Box 1450
Alexandria, VA 22313-1450
www.uspto.gov

Thomas J. Perkowski , Esq., P. C.
22 Thorndal Circle
Darien CT 06820

MAILED

OCT 20 2010

OFFICE OF PETITIONS

In re Application of	:	
Reuven Bakalash, et al.	:	
Application No. 11/978,220	:	DECISION ON PETITION
Filed: October 26, 2007	:	
Attorney Docket No. 142-006USANA0	:	

This is a decision on the petition under the unintentional provisions of 37 CFR 1.137(b), filed September 27, 2010, to revive the above-identified application.

The petition is **GRANTED**.

This application became abandoned for failure to timely pay the issue and publication fees on or before August 24, 2010, as required by the Notice of Allowance and Fee(s) Due, mailed May 24, 2010. Accordingly, the date of abandonment of this application is August 25, 2010. A Notice of Abandonment was mailed September 16, 2010.

The petition satisfies the requirements of 37 CFR 1.137(b) in that petitioner has supplied (1) the reply in the form of payment of the issue fee of $755 and the publication fee of $300, (2) the petition fee of $810; and (3) a proper statement of unintentional delay.

Telephone inquiries concerning this decision should be directed to Terri Johnson at (571) 272-2991.

This application is being referred to the Office of Data Management for processing into a patent.

/Terri Johnson/
Terri Johnson
Petitions Examiner
Office of Petitions

UNITED STATES PATENT AND TRADEMARK OFFICE

Commissioner for Patents
United States Patent and Trademark Office
P.O. Box 1450
Alexandria, VA 22313-1450
www.uspto.gov

MCCARTER & ENGLISH, LLP BOSTON
265 Franklin Street
Boston MA 02110

MAILED
OCT 21 2011
OFFICE OF PETITIONS

In re Application of :
Mukamolova et al. :
Application No. 11/978,257 : ON PETITION
Filed: October 29, 2008 :
Attorney Docket No. 118160-00302 :
For: BACTERIAL PHEROMONES AND USES THEREOF

This is a decision on the petition under 37 CFR 1.137(b), filed October 4, 2011, to revive the above-identified application.

The petition under 37 CFR 1.137(b) is **GRANTED**.

This application became abandoned for failure to timely reply to the Notice to Comply with Requirements for Patent Applications Containing Nucleotide Sequence and/or Amino Acid Sequence Disclosures ("Notice"), mailed March 31, 2011, which set a one month period for reply. No proper extensions of time having been obtained pursuant to 37 CFR 1.136(a) and no reply being received in the Office, this application became abandoned on May 1, 2011.

Applicants have submitted a proper reply to March 31, 2011 Notice in the form of an electronic CFR copy of the substitute sequence listing in a compliant ASCII text filed serving as both the paper copy required by 37 CFR 1.821(c) and the CFR required by 37 CFR 1.821(e) and a statement pursuant to 37 CFR 1.821 that the content of the paper and the computer readable copies of the substitute sequence listing are the same, as required by 37 CFR 1.821(f), an acceptable statement of the unintentional nature of the delay in responding to the March 31, 2011 Notice, and the $930.00 petition fee.

An extension of time under 37 CFR 1.136 must be filed prior to the expiration of the maximum extendable period for reply. See In re Application of S., 8 USPQ2d 1630, 1631 (Comm'r Pats. 1988). Since the $1,280.00 five month extension of time fee submitted with the petition on October 4, 2011 was filed subsequent to the expiration of the maximum extendable period for reply, this fee is unnecessary and will be credited to petitioners' deposit account.

37 CFR 1.137(b)(3) requires a statement that "the entire delay in filing the required reply from the due date for the reply until the filing of a grantable petition pursuant to 37 CFR 1.137(b) was unintentional." Since the statement appearing in the petition varies from the language required by 37 CFR 1.137(b)(3), the statement is being construed as the required statement. Petitioners must notify the Office if this is not a correct reading of the statement appearing in the petition.

All requirements under 37 CFR 1.137(b) being met, the petition is granted.

After the mailing of this decision, the file will be referred to Technology Center AU 1645.

Telephone inquiries concerning this matter may be directed to the undersigned at (571) 272-3230.

Shirene Willis Brantley

Shirene Willis Brantley
Senior Petitions Attorney
Office of Petitions

SPE RESPONSE FOR CERTIFICATE OF CORRECTION

DATE : 06-03-11

TO SPE OF : ART UNIT 2858

SUBJECT : Request for Certificate of Correction for Appl. No.: 11/978334 Patent No.: 7812592

CofC mailroom date: 05-10-11

Please respond to this request for a certificate of correction within 7 days.

FOR IFW FILES:

Please review the requested changes/corrections as shown in the **COCIN** document(s) in the IFW application image. No new matter should be introduced, nor should the scope or meaning of the claims be changed.

Please complete the response (see below) and forward the completed response to scanning using document code **COCX**.

FOR PAPER FILES:

Please review the requested changes/corrections as shown in the attached certificate of correction. Please complete this form (see below) and forward it with the file to:

Certificates of Correction Branch (CofC)
Randolph Square – 9D10-A
Palm Location 7580

Note: _____

Certificates of Correction Branch

703-756-1814 571-272-9005

Thank You For Your Assistance

The request for issuing the above-identified correction(s) is hereby:
Note your decision on the appropriate box.

- ☒ **Approved** — **All** changes apply.
- ☐ **Approved in Part** — Specify below which changes **do not** apply.
- ☐ **Denied** — State the reasons for denial below.

Comments: OK to enter all corrections.

SPE /Melissa J Koval/ **Art Unit** 2858

UNITED STATES PATENT AND TRADEMARK OFFICE

Commissioner for Patents
United States Patent and Trademark Office
P.O. Box 1450
Alexandria, VA 22313-1450
www.uspto.gov

Thomas R. Vigil Law Offices
319 Bluff Court
Barrington IL 60010

MAILED

NOV 10 2011

OFFICE OF PETITIONS

In re Patent No. 7,812,592 :
Issue Date: October 12, 2010 :
Application No. 11/978,334 : DECISION ON PETITION
Filed: October 29, 2007 :
Attorney Docket No. VWWH-40080 :

This is a decision on the petition under 37 CFR 1.182, filed May 9, 2011 and re-submitted on November 1, 2011, requesting issuance of duplicate Letters Patent for the above-identified patent.

The petition is **GRANTED**.

Petitioner has been charged two petition fees. The $400.00 petition fee charged on accounting date November 2, 2011 will be refunded to deposit account no. 50-4041.

The Office of Data Management is directed to issue duplicate Letters Patent.

Telephone inquiries concerning this decision may be directed to the undersigned at (571) 272-3230. Inquiries regarding the issuance of duplicate Letters Patent may be directed to Kimberly Terrell in the Office of Data Management at (703) 756-1568.

A copy of this decision is being sent to Office of Data Management for issuance of duplicate Letters Patent.

Shirene Willis Brantley

Shirene Willis Brantley
Senior Petitions Attorney
Office of Petitions

cc: Kimberly Terrell, (Fax No. 571-270-9958)

UNITED STATES PATENT AND TRADEMARK OFFICE

Commissioner for Patents
United States Patent and Trademark Office
P.O. Box 1450
Alexandria, VA 22313-1450
www.uspto.gov

ROBERT J. DEPKE
LEWIS T. STEADMAN
ROCKEY, DEPKE & LYONS, LLC
SUITE 5450 SEARS TOWER
CHICAGO IL 60606-6306

MAILED

NOV 08 2010

OFFICE OF PETITIONS

In re Application of	:	
Yamasaki et al.	:	
Application No. 11/978,350	:	ON PETITION
Filed: October 29, 2007	:	
Attorney Docket No. 075834.01100	:	

This is a decision on the petition under 37 CFR 1.181, filed October 12, 2010, requesting the withdrawal of the holding of abandonment in the above-identified application and has been so treated.

The petition to withdraw the holding of abandonment is **GRANTED.**

The above-identified application was held abandoned for failure to timely reply to the non-final Office action mailed January 13, 2010, which set a shortened statutory period for reply of three (3) months. A reply was due on or before April 13, 2010, or with a maximum extension of time, on or before July 13, 2010. A Notice of Abandonment was mailed on October 12, 2010.

Petitioner states that the reply was in fact timely submitted via facsimile on July 13, 2010; however, the complete transmission was not received until July 14, 2010. To support this assertion, petitioner has supplied a copy of the previously mailed correspondence, which bears a certificate of facsimile transmission date of July 13, 2010.

As asserted by the petitioner, MPEP 502.01 states:

The date of receipt accorded to any correspondence permitted to be sent by facsimile transmission, including a continued prosecution application (CPA) filed under 37 CFR 1.53(d) (for design applications only), is the date the complete transmission is received by an Office facsimile unit, unless the transmission is completed on a Saturday, Sunday, or Federal holiday within the District of Columbia.

Note however, that if the Certificate of Transmission is available (for documents not proscribed by 37 CFR 1.8(a)(2)), then the above facsimile may be considered timely filed on Friday if it contains a Certificate of Transmission and is in compliance with 37 CFR 1.8(a)(1)(i)(B) and (ii).

Although the complete transmission was not received until after midnight on July 14, 2010, the reply included a Certificate of Facsimile Transmission dated July 13, 2010.

In view of the above, the holding of abandonment is hereby withdrawn and the application restored to pending status. A petition to withdraw the holding of abandonment under the provisions of 37 CFR 1.181 does not require a fee and none has been charged.

This matter is being referred to Technology Center AU 1745 for further examination on the merits.

Telephone inquiries concerning this decision should be directed to the undersigned at (571) 272-3206.

Liana Walsh
Petitions Examiner
Office of Petitions

UNITED STATES PATENT AND TRADEMARK OFFICE

Commissioner for Patents
United States Patent and Trademark Office
P.O. Box 1450
Alexandria, VA 22313-1450
www.uspto.gov

UNISYS CORPORATION
OFFICE OF THE GENERAL COUNSEL
801 LAKEVIEW DRIVE, SUITE 100
MAILSTOP: 2NW
BLUE BELL PA 19422

MAILED

SEP 14 2010

OFFICE OF PETITIONS

In re Application of	:	
Mazzagatti et al.	:	
Application No. 11/978,473	:	DECISION ON PETITION
Filed: October 29, 2007	:	UNDER 37 CFR 1.78(a)(3)
Attorney Docket No. TN320.USD1	:	

This is a decision on the petition under 37 CFR 1.78(a)(3), filed July 7, 2010, to accept an unintentionally delayed claim under 35 U.S.C. § 120 for the benefit of priority to the prior-filed nonprovisional applications set forth in the amendment filed concurrently with the instant petition.

The petition is **DISMISSED**.

A petition for acceptance of a claim for late priority under 37 CFR 1.78(a)(3) is only applicable to those applications filed on or after November 29, 2000. Further, the petition is appropriate only after the expiration of the period specified in 37 CFR 1.78(a)(2)(ii). In addition, the petition under 37 CFR 1.78(a)(3) must be accompanied by:

(1) the reference required by 35 U.S.C. § 120 and 37 CFR 1.78(a)(2)(i) of the prior-filed application(s), unless previously submitted;
(2) the surcharge set forth in § 1.17(t); and
(3) a statement that the entire delay between the date the claim was due under 37 CFR 1.78(a)(2)(ii) and the date the claim was filed was unintentional. The Commissioner may require additional information where there is a question whether the delay was unintentional.

The instant petition does not comply with item (1) above.

With regards to item (1), petitioner has requested benefit of Application No. 10/385,421 filed on March 10, 2003 and issued as Patent No. 6,961,733 on November 1, 2005. Since the instant application was filed on October 29, 2007, no copendency exists between these two applications. Copendency between the instant application and the prior application is required. Since the applications are not copending, the benefit claim to the prior-filed nonprovisional is improper. Applicant is required to delete the reference to the prior-filed application from the first sentence(s) of the specification, unless applicant can establish copendency between the applications.

Accordingly, before the petition under 37 CFR 1.78(a)(3) can be granted, a substitute amendment[1] correcting the above matter, along with a renewed petition under 37 CFR 1.78(a)(6), is required. No further petition fee is necessary.

Further, petitioner's deposit account has been charged the required surcharge fee of $1,410.00 as authorized on July 7, 2010.

Additionally, the address given on the petition differs from the address of record. A courtesy copy of this decision is being mailed to the address given on the petition; however, the Office will mail all future correspondence solely to the address of record.

Further correspondence with respect to this matter should be addressed as follows:

By mail: Mail Stop PETITIONS
Commissioner for Patents
Post Office Box 1450
Alexandria, VA 22313-1450

By hand: Customer Window located at:
U.S. Patent and Trademark Office
Customer Service Window Randolph Building
401 Dulany Street
Alexandria, VA 22314

By fax: (571) 273-8300
ATTN: Office of Petitions

Any questions concerning this matter may be directed to Joan Olszewski at (571) 272-7751.

/Liana Walsh/
Liana Walsh
Petitions Examiner
Office of Petitions

cc: Richard J. Gregson
Unisys Corporation
Unisys Way
MS/E8-114
Blue Bell, PA 19424

[1] *Note* 37 CFR 1.121

UNITED STATES PATENT AND TRADEMARK OFFICE

UNITED STATES DEPARTMENT OF COMMERCE
United States Patent and Trademark Office
Address: COMMISSIONER FOR PATENTS
P.O. Box 1450
Alexandria, Virginia 22313-1450
www.uspto.gov

APPLICATION NO.	FILING DATE	FIRST NAMED INVENTOR	ATTORNEY DOCKET NO.	CONFIRMATION NO.
11/978,631	10/30/2007	Yosuke Kondo	008312-0366296	5785

7590 10/08/2010
PILLSBURY WINTHROP SHAW PITTMAN, LLP
P.O. BOX 10500
MCLEAN, VA 22102

EXAMINER
LOUIS JACQUES, JACQUES H

ART UNIT	PAPER NUMBER
2112	

MAIL DATE	DELIVERY MODE
10/08/2010	PAPER

DECISION GRANTING PETITION UNDER 37 CFR 1.138(d)

The declaration of express abandonment is recognized

This is in response to the petition under 37 CFR 1.138(d), requesting for a refund of any previously paid search fee and excess claims fee in the above-identified application.

The petition is granted.

The express abandonment is recognized. Any previously paid search fee and excess claims fee are hereby refunded.

Telephone inquiries should be directed to the Office of Data Management at (571) 272-4200.

Nimi Farmer

Patent Publication Branch
Office of Data Management

[illegible] 11978631
02 FC:1111 [illegible]

FORM PET651G (Rev. 08/07)

UNITED STATES PATENT AND TRADEMARK OFFICE

Commissioner for Patents
United States Patent and Trademark Office
P.O. Box 1450
Alexandria, VA 22313-1450
www.uspto.gov

TOWNSEND AND TOWNSEND AND CREW, LLP
TWO EMBARCADERO CENTER
EIGHTH FLOOR
SAN FRANCISCO CA 94111-3834

MAILED

AUG 16 2010

OFFICE OF PETITIONS

In re Application of	:	
Steven G. Reed, et al.	:	DECISION ON PETITION
Application No. 11/978,786	:	TO WITHDRAW
Filed: October 29, 2007	:	FROM RECORD
Attorney Docket No. 014058-009024US	:	

This is a decision on the request to withdraw as attorney of record under 37 CFR § 1.36, filed July 1, 2010.

The request is **NOT APPROVED**.

The request cannot be approved because it lacks a forwarding correspondence address of the first named inventor or a properly intervening assignee.

If the forwarding correspondence address is to the assignee, the Office will only accept correspondence address changes to the most current address information provided for the assignee of the entire interest *that properly became of record under 37 CFR 3.71.* 37 CFR 3.71(c) states:

> *An assignee becomes of record either in a national patent application or a reexamination proceeding by filing a statement in compliance with § 3.73(b) that is signed by a party who is authorized to act on behalf of the assignee.*

The assignee must establish its ownership of the patent to the satisfaction of the Director. In this regard, the statement under 37 CFR 3.73(b) must have either: (i) documentary evidence of a chain of title from the original owner to the assignee (*e.g.*, copy of an executed assignment), and a statement affirming that the documentary evidence of the chain of title from the original owner to the assignee was or concurrently is being submitted for recordation pursuant to § 3.11; or (ii) a statement specifying where documentary evidence of a chain of title from the original owner to the assignee is recorded in the assignment records of the Office (*e.g.*, reel and frame number).

All future communications from the Office will continue to be directed to the above-listed address until otherwise notified by applicant.

Telephone inquires concerning this decision should be directed to the undersigned at (571) 272-2991.

Terri Johnson

Terri Johnson
Petitions Examiner
Office of Petitions

UNITED STATES PATENT AND TRADEMARK OFFICE

Commissioner for Patents
United States Patent and Trademark Office
P.O. Box 1450
Alexandria, VA 22313-1450
www.uspto.gov

SCOTT A. WHITAKER, PH.D., J.D.
SENIOR INTELLECTUAL PROPERTY COUNSEL
BIONUMERIK PHARMACEUTICALS, INC.
8122 DATAPOINT DRIVE, SUITE 1250
SAN ANTONIO TX 78229

MAILED
MAR 28 2011
OFFICE OF PETITIONS

In re Patent No. 7,777,060 :
Issue Date: 17 August, 2010 :
Application No. 11/978,818 : DECISION
Filed: 30 October, 2007 :
Attorney Docket No. X-0258

This is a decision on the petition filed on 1 December, 2010, under 37 C.F.R. §1.27(g)(2) requesting that status as a Small Entity be removed.

NOTE:

In view of their duty of candor to the Office to properly inquire to ascertain the accuracy of representations made before the Office (*see*: 37 C.F.R. §1.4, §10.18, MPEP §410), Petitioners always are reminded of the responsibility to review their records and submit accurate information to the Office.

Petitioner's submission is **ACCEPTED**.

In accordance with the request, status as a Small Entity will be removed, and Petitioner is required to pay fees at the schedule set forth for not-small entities. **The additional fees were charged as authorized**.

The availability of applications and application papers online to applicants/practitioners who diligently associate their Customer Number with the respective application(s) now provides an applicant/practitioner on-demand information as to events/transactions in an application.

Out of an abundance of caution, Petitioners always are reminded that that those registered to practice and all others who make representations before the Office **must** inquire into the

underlying facts of representations made to the Office and support averments with the appropriate documentation–since all owe to the Office the continuing duty to disclose.[1]

The instant application is released to IFW Files Repository in due course.

Telephone inquiries regarding this decision may be directed to the undersigned at (571) 272-3214—it is noted, however, that all practice before the Office is in writing (see: 37 C.F.R. §1.2[2]) and the proper authority for action on any matter in this regard are the statutes (35 U.S.C.), regulations (37 C.F.R.) and the commentary on policy (MPEP). Therefore, no telephone discussion may be controlling or considered authority for Petitioner's action(s).

/John J. Gillon, Jr./
John J. Gillon, Jr.
Senior Attorney
Office of Petitions

[1] See supplement of 17 June, 1999. The Patent and Trademark Office is relying on Petitioner's duty of candor and good faith and accepting a statement made by Petitioner. See Changes to Patent Practice and Procedure, 62 Fed. Reg. at 53160 and 53178, 1203 Off. Gaz. Pat. Office at 88 and 103 (responses to comments 64 and 109)(applicant obligated under 37 C.F.R. §10.18 to inquire into the underlying facts and circumstances when providing statements to the Patent and Trademark Office).

[2] The regulations at 37 C.F.R. §1.2 provide:

§1.2 Business to be transacted in writing.

All business with the Patent and Trademark Office should be transacted in writing. The personal attendance of applicants or their attorneys or agents at the Patent and Trademark Office is unnecessary. The action of the Patent and Trademark Office will be based exclusively on the written record in the Office. No attention will be paid to any alleged oral promise, stipulation, or understanding in relation to which there is disagreement or doubt.

UNITED STATES PATENT AND TRADEMARK OFFICE

Commissioner for Patents
United States Patent and Trademark Office
P.O. Box 1450

MAILED

AUG 31 2011

OFFICE OF PETITIONS

NEOCONIX, INC.
c/o INTELLEVATE, LLC
P.O. BOX 52050
MINNEAPOLIS MN 55402

In re Application of :
Larry E. DITTMANN : ON PETITION
Application No. 11/978827 :
Filed: October 30, 2007 :
Atty. Docket No.: EPC-00066/D1

This is a decision on the petition under 37 CFR 1.137(b), filed July 29, 2011, to revive the above-identified application.

The petition is **GRANTED**.

The application became abandoned for failure to reply in a timely manner to the non-final Office action mailed September 9, 2010, which set a statutory shortened period for reply of three (3) months. An improper reply was received February 8, 2011, along with a two months' extension of time. The application became abandoned February 10, 2011. A Notice of Abandonment was mailed May 25, 2011.

The petition satisfies the conditions for revival pursuant to 37 CFR 1.137(b) by including (1) a reply in the form of a Response to the non-final Office action mailed September 9, 2010, (2) a petition fee of $810, and (3) a statement of unintentional delay. The reply to the outstanding Office action is accepted as having been unintentionally delayed.

It is noted applicant has filed a Request for Continued Examination (RCE), and RCE fee. However, it is improper to file an RCE and RCE fee prior to the close of prosecution. *See* MPEP 706.07. Accordingly, the RCE fee will be refunded to petitioner.

An extension of time under 37 CFR 1.136(a) must be filed prior to the expiration of the maximum extendable period for reply. *See* In re Application of S., 8 USPQ2d 1630, 1631 (Comm'r Pats. 1988). Since the $310 extension of time fee submitted with the petition on July 29, 2011 was subsequent to the maximum extendable period for reply, this fee is unnecessary and will be refunded to the petitioner.

The file does not indicate a change of address has been submitted, although the address given on the petition differs from the address of record. If appropriate, a change of

address should be filed in accordance with MEPP 601.03. A courtesy copy of this decision is being mailed to the address given on the petition; however, the Office will mail all future correspondence solely to the address of record.

Telephone inquires regarding this decision should be directed to Robert DeWitty, Petitions Attorney, Office of Petitions (571-272-8427).

The application file will be referred to Technology Center Art Unit 3729 for further action on the filed submission.

Anthony Knight
Director
Office of Petitions

cc: Kenneth A. Seaman
c/o CPA Global, P.O. Box 52050
Minneapolis, MN 55402

SPE RESPONSE FOR CERTIFICATE OF CORRECTION

Paper No.:20110303

DATE : March 03, 2011

TO SPE OF : ART UNIT 2456

SUBJECT : Request for Certificate of Correction on Patent No.: 7,606,919

A response is requested with respect to the accompanying request for a certificate of correction.

Please complete this form and return with file, within **7** days to:
Certificates of Correction Branch - ST (South Tower) 9A22
Palm location **7590** - Tel. No. (703) 305-8309

With respect to the change(s) requested, correcting Office and/or Applicant's errors, should the patent read as shown in the certificate of correction? No new matter should be introduced, nor should the scope or meaning of the claims be changed.

Thank You For Your Assistance **Certificates of Correction Branch**

The request for issuing the above-identified correction(s) is hereby:

Note your decision on the appropriated box.

☒ **Approved** All changes apply.

☐ **Approved in Part** Specify below which changes **do not** apply.

☐ **Denied** State the reasons for denial below.

Comments:

/Rupal D. Dharia/
Supervisory Patent Examiner, Art Unit 2456

UNITED STATES PATENT AND TRADEMARK OFFICE

Commissioner for Patents
United States Patent and Trademark Office
P.O. Box 1450
Alexandria, VA 22313-1450
www.uspto.gov

HUNTON & WILLIAMS LLP
INTELLECTUAL PROPERTY
DEPARTMENT
1900 K STREET, N.W.
SUITE 1200
WASHINGTON DC 20006-1109

MAILED
NOV 22 2010
OFFICE OF PETITIONS

In re Application of

Schwarz

Application No. 11/978,856

Filed: October 30, 2007

Attorney Docket No. **47004.000527**

DECISION ON PETITION

This is a decision on the petition under 37 CFR 1.137(b), filed September 7, 2010, to revive the above-identified application.

The petition is **GRANTED**.

The above-cited application became abandoned for failure to reply in a timely manner to the non-final Office action mailed August 31, 2009, which set a shortened statutory period for reply of three (3) months from its mailing date. No extension of time pursuant to 37 CFR 1.136(a) was obtained within the allowable period. Accordingly, the application became abandoned,on November 30, 2009. A Notice of Abandonment was mailed May 21, 2010.

The amendment filed September 7, 2010, is noted.

The application is being forwarded to Technology Center 2800, GAU 2887 for further processing.

Telephone inquiries concerning this decision should be directed to the undersigned at (571) 272-3222.

/Kenya A. McLaughlin/

Kenya A. McLaughlin
Petitions Attorney
Office of Petitions

UNITED STATES PATENT AND TRADEMARK OFFICE

Commissioner for Patents
United States Patent and Trademark Office
P.O. Box 1450
Alexandria, VA 22313-1450
www.uspto.gov

PATEL & ALUMIT PC
SUITE 360
16830 VENTURA BLVD
ENCINO CA 91436

MAILED

NOV 07 2011

OFFICE OF PETITIONS

In re Application of	:	
Leonard Eriksson	:	
Application No. 11/978,865	:	ON PETITION
Filed: October 29, 2007	:	
Attorney Docket No. 22820-002	:	

This is a decision on the petition to revive under 37 CFR 1.137(b), filed October 21, 2011.

The petition under 37 CFR 1.137(b) is **GRANTED**.

The above application became abandoned for failure to timely file a reply to the Notice of Non-Compliant Amendment, mailed January 6, 2011. This Notice set an extendable period for reply of one (1) month for applicant to submit a reply bearing a proper signature. Applicant filed a properly signed reply on April 25, 2011, with a two (2) month extension of time. However, on April 25, 2011, a three (3) month extension of time was needed to make the reply timely. As such, the application became abandoned by operation of law on April 7, 2011. The Office mailed a courtesy Notice of Abandonment on October 13, 2011.

With the instant petition, applicant made the proper statement of unintentional delay and paid the petition fee. The required reply was previously filed on April 25, 2011.

The application is being forwarded to Group Art Unit 3677 for consideration of the reply filed April 25, 2011.

Telephone inquiries related to this decision should be directed to the undersigned at (571)272-3207.

Cliff Congo
Petitions Attorney
Office of Petitions

UNITED STATES PATENT AND TRADEMARK OFFICE

UNITED STATES DEPARTMENT OF COMMERCE
United States Patent and Trademark Office
Address: COMMISSIONER FOR PATENTS
P.O. Box 1450
Alexandria, Virginia 22313-1450
www.uspto.gov

APPLICATION NO.	FILING DATE	FIRST NAMED INVENTOR	ATTORNEY DOCKET NO.	CONFIRMATION NO.
11/978,919	10/30/2007	Richard L. Gregg	120.0002-01000	6839

22882 7590 12/07/2010
MARTIN & FERRARO, LLP
1557 LAKE O'PINES STREET, NE
HARTVILLE, OH 44632

EXAMINER
WYSZYNSKI, AUBREY H

ART UNIT	PAPER NUMBER
2434	

MAIL DATE	DELIVERY MODE
12/07/2010	PAPER

Please find below and/or attached an Office communication concerning this application or proceeding.

The time period for reply, if any, is set in the attached communication.

UNITED STATES PATENT AND TRADEMARK OFFICE

Commissioner for Patents
United States Patent and Trademark Office
P.O. Box 1450
Alexandria, VA 22313-1450
www.uspto.gov

Thomas Martin
Martin & Ferraro, LLP
1557 Lake O'Pines Street, NE
Hartville OH 44632

In re Application of:
Gregg et al.
Appl. No.: 11/978,919
Filed: October 30, 2007
For: Method and System for Managing Access to Protected Computer Resources Provided via an Internet Protocol Network

DECISION ON PETITION UNDER 37 CFR § 1.59

This is a decision on the petition under 37 CFR § 1.59(b), filed on November 16 2010, to expunge information submitted pursuant to MPEP § 724.02.

The petition is **DISMISSED**.

Petitioner requests that the information submitted on November 16 2010 be expunged from the record as the information was identified as being proprietary. The petition fee set forth in 37 CFR § 1.17(g) has been paid.

The petition is premature because the application is not currently allowed or abandoned. Accordingly, it is not appropriate to make a final determination of whether or not the material requested to be expunged is "material," with "materiality" being defined as any information which the examiner considers as being important to a determination of patentability of the claims.

During prosecution on the merits, the examiner will determine whether or not the information submitted on November 16 2010 is considered to be "material." Once prosecution on the merits is closed, applicant may re-submit a petition to expunge the information. No further fee is required for such a second submission of a petition under 37 CFR § 1.59 to expunge information. If the information is not considered by the examiner to be material, the information will be removed from the file.

Any inquiry concerning this decision should be directed to the undersigned whose telephone number is (571) 272-3612. A second point of contact is Kim Huynh at (571) 272-4147.

Please review the public pair file to help ensure that any proprietary information is not available to the public. If some material is found please contact .

Tod Swann, QAS
Technology Center 2400

UNITED STATES PATENT AND TRADEMARK OFFICE

UNITED STATES DEPARTMENT OF COMMERCE
United States Patent and Trademark Office
Address: COMMISSIONER FOR PATENTS
P.O. Box 1450
Alexandria, Virginia 22313-1450
www.uspto.gov

APPLICATION NO.	FILING DATE	FIRST NAMED INVENTOR	ATTORNEY DOCKET NO.	CONFIRMATION NO.
11/978,919	10/30/2007	Richard L. Gregg	120.0002-01000	6839

22882 7590 01/27/2012
MARTIN & FERRARO, LLP
1557 LAKE O'PINES STREET, NE
HARTVILLE, OH 44632

EXAMINER
WYSZYNSKI, AUBREY H

ART UNIT	PAPER NUMBER
2434	

MAIL DATE	DELIVERY MODE
01/27/2012	PAPER

Please find below and/or attached an Office communication concerning this application or proceeding.

The time period for reply, if any, is set in the attached communication.

UNITED STATES PATENT AND TRADEMARK OFFICE

Commissioner for Patents
United States Patent and Trademark Office
P.O. Box 1450
Alexandria, VA 22313-1450
www.uspto.gov

MAILED

JAN 27 2012

DIRECTOR OFFICE
TECHNOLOGY CENTER 2400

MARTIN & FERRARO, LLP
1557 LAKE O'PINES STREET, NE
HARTVILLE OH 44632

In re Application of: Gregg, Richard L. et al.
Appl. No.: 11/978,919
Filed: October 31, 2007
For: METHOD AND SYSTEM FOR MANAGING ACCESS TO PROTECTED COMPUTER RESOURCES PROVIDED VIA AN INTERNET PROTOCOL NETWORK

DECISION ON PETITION
UNDER 37 CFR § 1.59

This is a response to the petition under 37 CFR 1.59(b), filed October 20, 2011, to expunge information from the above identified application.

The decision on the petition is **GRANTED**.

Petitioner requests that document submitted November 15, 2010, be expunged from the record. Petitioner states either: (A) that the information contains trade secret material, proprietary material and/or material that is subject to a protective order which has not been made public; or (B) that the information submitted was unintentionally submitted and the failure to obtain its return would cause irreparable harm to the party who submitted the information or to the party in interest on whose behalf the information was submitted, and the information has not otherwise been made public. The petition fee set forth in 37 CFR 1.17(g) has been paid.

Applicant is required to retain the expunged material(s) for the life of any patent which issues on the above-identified application.

The expunged material has been closed from public view and will not be returned to applicant.

Any inquiry concerning this decision should be directed to the undersigned whose telephone number is (571) 272-3126.

/Chau Nguyen/

Chau Nguyen
QAS, Technology Center 2400

UNITED STATES PATENT AND TRADEMARK OFFICE

Commissioner for Patents
United States Patent and Trademark Office
P.O. Box 1450
Alexandria, VA 22313-1450
www.uspto.gov

BLANK ROME LLP
WATERGATE
600 NEW HAMPSHIRE AVENUE, N.W.
WASHINGTON DC 20037

MAILED

AUG 27 2010

OFFICE OF PETITIONS

In re Application of	:	
Sydney M. FINEGOLD	:	
Application No. 11/979,007	:	DECISION ON PETITION
Filed: October 30, 2007	:	TO WITHDRAW
Attorney Docket No. 111838.0151	:	FROM RECORD
	:	

This is a decision on the Request to Withdraw as attorney or agent of record under 37 C.F.R. § 1.36(b), filed July 27, 2010.

The request is **NOT APPROVED.**

A review of the file record indicates that R. Minh-Quan K. Pham does not have power of attorney in this patent application. See 37 C.F.R. § 10.40. Accordingly, the request to withdraw under 37 C.F.R. § 1.36(b) is not applicable. The Office acknowledges the Power of Attorney filed October 30, 2007, however, it should be noted that the Office will not recognize more than ten patent practitioners named in a power of attorney. Please see 37 CFR 1.32 (c) (3).

Further, please note the Office will no longer approve requests from practitioners to withdraw from applications where the requesting practitioner is acting, or has acted, in a representative capacity pursuant to 37 CFR 1.34. In these situations, the practitioner is responsible for the correspondence the practitioner files in the application while acting in a representative capacity. As such, there is no need for the practitioner to obtain the Office's permission to withdraw from representation. However, practitioners acting in a representative capacity, like practitioners who have a power of attorney in the application, remain responsible for noncompliance with 37 CFR 1.56, as well as 37 CFR 10.18, with respect to documents they file.

All future communications from the Office will continue to be directed to the above-identified address until otherwise properly notified.

Telephone inquiries concerning this decision should be directed to the undersigned at (571) 272- 6735.

/dcg/
Diane C. Goodwyn
Petitions Examiner
Office of Petitions

UNITED STATES PATENT AND TRADEMARK OFFICE

Commissioner for Patents
United States Patent and Trademark Office
P.O. Box 1450
Alexandria, VA 22313-1450
www.uspto.gov

BIRCH STEWART KOLASCH & BIRCH
PO BOX 747
FALLS CHURCH VA 22040-0747

MAILED

AUG 30 2010

OFFICE OF PETITIONS

In re Application of
Wan-Shun Chou
Application No. 11/979,059
Filed: October 30, 2007
Attorney Docket No. **5234-0249PUS1**

DECISION ON PETITION
TO WITHDRAW
FROM RECORD

This is a decision on the Request to Withdraw as attorney or agent of record under 37 CFR § 1.36(b), filed August 6, 2010.

The request is **NOT APPROVED**.

The request cannot be approved because the requested change in the correspondence address is improper.

The Office will only accept correspondence address changes to the most current address information provided for the assignee of the entire interest *who properly became of record under 37 CFR 3.71,* or, if no assignee of the entire interest has properly been made of record, the most current address information provided for the first named inventor. 37 CFR 3.71(c) states:

> *An assignee becomes of record either in a national patent application or a reexamination proceeding by filing a statement in compliance with § 3.73(b) that is signed by a party who is authorized to act on behalf of the assignee.*

Therefore, as there is currently no Statement under 37 CFR 3.73(b) with the current assignee information of record in the instant application, the Office cannot change the correspondence address to the address on the Request to Withdraw at this present time.

All future communications from the Office will continue to be directed to the above-listed address until otherwise notified by applicant.

Telephone inquires concerning this decision should be directed to JoAnne Burke at 571-272-4584.

JoAnne Burke
Petitions Examiner
Office of Petitions

UNITED STATES PATENT AND TRADEMARK OFFICE

Commissioner for Patents
United States Patent and Trademark Office
P.O. Box 1450
Alexandria, VA 22313-1450
www.uspto.gov

BIRCH STEWART KOLASCH & BIRCH
PO BOX 747
FALLS CHURCH VA 22040-0747

MAILED

SEP 27 2010

OFFICE OF PETITIONS

In re Application of	:	
Wan-Shun Chou	:	
Application No. 11/979,059	:	DECISION ON PETITION
Filed: October 30, 2007	:	TO WITHDRAW
Attorney Docket No. **5234-0249PUS1**	:	FROM RECORD
	:	

This is a corrected decision on the Request to Withdraw as attorney or agent of record under 37 CFR § 1.36(b), filed August 6, 2010.

The request is **APPROVED**.

A grantable request to withdraw as attorney/agent of record must be signed by every attorney/agent seeking to withdraw or contain a clear indication that one attorney is signing on behalf of another/others. The Office requires the practitioner(s) requesting withdrawal to certify that he, she, or they have: (1) given reasonable notice to the client, prior to the expiration of the response period, that the practitioner(s) intends to withdraw from employment; (2) delivered to the client or a duly authorized representative of the client all papers and property (including funds) to which the client is entitled; and (3) notified the client of any responses that may be due and the time frame within which the client must respond , pursuant to 37 CFR 10.40.

The request was signed by Paul C. Lewis on behalf of all attorneys of record who are associated with Customer Number 02292.

All attorneys/agents associated with the Customer Number 02292 have been withdrawn.

Applicant is reminded that there is no attorney of record at this time.

All future correspondence will be directed to the assignee I-CHIUN PRECISIONS INDUSTRY CO., LTD. at the address list listed in the request.

There is an outstanding Office action mailed May 4, 2010, that requires a reply from the applicant.

Telephone inquiries concerning this decision should be directed to the JoAnne Burke at 571-272-4584.

Anthony Knight
Director
Office of Petitions

cc: I-CHIUN PRECISIONS INDUSTRY CO., LTD.
NO. 17, WUGONG 5TH RD.
SINJHUANG CITY, TAIPEI COUNTY, TAIWAN 242 R.O.C.

UNITED STATES PATENT AND TRADEMARK OFFICE

UNITED STATES DEPARTMENT OF COMMERCE
United States Patent and Trademark Office
Address: COMMISSIONER FOR PATENTS
P.O. Box 1450
Alexandria, Virginia 22313-1450
www.uspto.gov

APPLICATION NUMBER	FILING OR 371(C) DATE	FIRST NAMED APPLICANT	ATTY. DOCKET NO./TITLE
11/979,059	10/30/2007	Wan-Shun Chou	5234-0249PUS1

CONFIRMATION NO. 5641

POWER OF ATTORNEY NOTICE

2292
BIRCH STEWART KOLASCH & BIRCH
PO BOX 747
FALLS CHURCH, VA 22040-0747

OC000000043711840

Date Mailed: 09/27/2010

NOTICE REGARDING CHANGE OF POWER OF ATTORNEY

This is in response to the Power of Attorney filed 08/06/2010.

- The withdrawal as attorney in this application has been accepted. Future correspondence will be mailed to the new address of record. 37 CFR 1.33.

/jlburke/

Office of Data Management, Application Assistance Unit (571) 272-4000, or (571) 272-4200, or 1-888-786-0101

UNITED STATES PATENT AND TRADEMARK OFFICE

Commissioner for Patents
United States Patent and Trademark Office
P.O. Box 1450

LITMAN LAW OFFICES, LTD.
PATENT LAW BUILDING
8955 CENTER STREET
MANASSAS VA 20110

MAILED
JUN 28 2011
OFFICE OF PETITIONS

In re Application of	:	
Johnnie R. JACKSON	:	ON PETITION
Application No. 11/979,069	:	
Filed: October 30, 2007	:	
Atty. Docket No.: 28817.00		

This is a decision on the petition under 37 CFR 1.137(b), filed May 5, 2011, to revive the above-identified application.

The petition is **GRANTED**.

The application was held abandoned for failure to reply in a timely manner to the non-final Office action mailed August 6, 2010, which set a shortened statutory period for reply of three (3) months. No reply was set, and no extensions of time under the provisions of 37 CFR 1.136(a) were obtained. The application became abandoned on November 7, 2010. A Notice of Abandonment was mailed April 21, 2011.

The petition satisfies the conditions for revival pursuant to 37 CFR 1.137(b) by including (1) a reply in the form of Response to the non-final Office action mailed August 6, 2010, (2) a petition fee of $810, and (3) a statement of unintentional delay. The reply to the non-final Office action is accepted as having been unintentionally delayed.

Telephone inquires regarding this decision should be directed to Robert DeWitty, Petitions Attorney, Office of Petitions (571-272-8427).

The application file will be referred to Technology Center Art Unit 3685 for further action on the filed Response.

Anthony Knight
Director
Office of Petitions

UNITED STATES PATENT AND TRADEMARK OFFICE

Commissioner for Patents
United States Patent and Trademark Office
P.O. Box 1450
Alexandria, VA 22313-1450
www.uspto.gov

IVAN MESZLENYI
20 GARNETT JANES ROAD
SUITE 908
TORONTO ON M8V 3Z1 CA CANADA

MAILED

SEP 07 2010

OFFICE OF PETITIONS

ON PETITION

In re Application of	:
Meszlenyi, Ivan	:
Application No. 11/979,090	:
Filed: October 31, 2007	:
Title: Spike Converter	:

This is a decision on the petition under 37 C.F.R. § 1.137(b), filed July 29, 2010 and August 2, 2010, to revive the above-identified application.

The petition is **GRANTED**.

The petition now satisfies the requirements of 37 CFR 1.137(b) in that petitioner has supplied (1) the complete reply in the form of payment of the search and examination fees, and the late surcharge, (2) the petition fee of $810.00 (previously paid on April 26, 2010), and (3) a proper statement of unintentional delay.

Telephone inquiries concerning this decision should be directed to the undersigned at (571) 272-3206.

This matter is being referred to the Office of Patent Application Processing for further pre-examination processing. Thereafter, the application will be referred to Technology center AU 2816 for examination on the merits.

Liana Walsh
Petitions Examiner
Office of Petitions

UNITED STATES PATENT AND TRADEMARK OFFICE

Commissioner for Patents
United States Patent and Trademark Office
P.O. Box 1450
Alexandria, VA 22313-1450
www.uspto.gov

IVAN MESZLENYI
20 Garnett Janes Road
Suite 908
TORONTO ON M8V 3Z1 CA CANADA

MAILED
SEP 06 2011
OFFICE OF PETITIONS

In re Application of	:	
Ivan Meszlenyi	:	
Application No. 11/979,090	:	DECISION ON PETITION
Filed: October 31, 2007	:	
Attorney Docket No.	:	

This is a decision on the petition under the unintentional provisions of 37 CFR 1.137(b), filed August 22, 2011, to revive the above-identified application.

The petition is **GRANTED**.

This application became abandoned for failure to timely pay the issue and publication fees on or before February 28, 2011, as required by the Notice of Allowance and Fee(s) Due, mailed November 26, 2010. Accordingly, the date of abandonment of this application is March 1, 2011. A Notice of Abandonment was mailed on March 11, 2011.

The petition satisfies the requirements of 37 CFR 1.137(b) in that petitioner has supplied (1) the reply in the form of payment of the issue fee of $755 and the publication fee of $300, (2) the petition fee of $810, and (3) a proper statement of unintentional delay. Accordingly, the issue and publication fees are accepted as being unintentionally delayed.

Telephone inquiries concerning this decision should be directed to Kimberly Inabinet at (571) 272-4618.

This application is being referred to the Office of Data Management for further processing into a patent.

/Kimberly A. Inabinet/

Kimberly A. Inabinet
Petitions Examiner
Office of Petitions

PTO/SB/131 (01-10)
Approved for use through 02/28/2011. OMB 0651-0020
U.S. Patent and Trademark Office; U. S. DEPARTMENT OF COMMERCE
Under the Paperwork Reduction Act of 1995, no persons are required to respond to a collection of information unless it displays a valid OMB control number.

REQUEST FOR RECALCULATION OF PATENT TERM ADJUSTMENT IN VIEW OF *WYETH**

Attorney Docket Number: MOST3001AR/C/JEK	Patent Number: 7665268
Filing Date (or 371(b) or (f) Date): 2007-10-31	Issue Date: 2010-02-23
First Named Inventor: Stefan Simon Gustaaf Moriau	
Title: FLOOR PANELS WITH EDGE CONNECTORS	

PATENTEE HEREBY REQUESTS RECALCULATION OF THE PATENT TERM ADJUSTMENT (PTA) UNDER 35 USC 154(b) INDICATED ON THE ABOVE-IDENTIFIED PATENT. THE PATENTEE'S SOLE BASIS FOR REQUESTING THE RECALCULATION IS THE USPTO'S PRE-*WYETH* INTERPRETATION OF 35 U.S.C. 154(b)(2)(A).

Note: This form is only for requesting a recalculation of PTA for patents issued before March 2, 2010, if the sole basis for requesting the recalculation is the USPTO's pre-*Wyeth* interpretation of 35 U.S.C. 154(b)(2)(A). See Instruction Sheet on page 2 for more information.

Patentees are reminded that to preserve the right to review in the United States District Court for the District of Columbia of the USPTO's patent term adjustment determination, a patentee must ensure that he or she also takes the steps required under 35 U.S.C. 154(b)(3) and (b)(4) and 37 CFR 1.705 in a timely manner.

**Wyeth v. Kappos*, No. 2009-1120 (Fed. Cir., Jan. 7, 2010).

Signature /ThomasJMoore/	Date 2010-08-20
Name (Print/Typed) Thomas J. Moore	Registration Number 28974

***Note**: Signatures of all the inventors or assignees of record of the entire interest or their representative(s) are required in accordance with 37 CFR 1.33 and 11.18. Please see 37 CFR 1.4(d) for the form of the signature. If necessary, submit multiple forms for more than one signature, see below**.*

☐ *Total of _____ forms are submitted.

The information is required to obtain or retain a benefit by the public which is to file (and by the USPTO to process) an application. Confidentiality is governed by 35 U.S.C. 122 and 37 CFR 1.11 and 1.14. This collection is estimated to take 12 hours to complete, including gathering, preparing, and submitting the completed application form to the USPTO. Time will vary depending upon the individual case. Any comments on the amount of time you require to complete this form and/or suggestions for reducing this burden, should be sent to the Chief Information Officer, U.S. Patent and Trademark Office, U.S. Department of Commerce, P.O. Box 1450, Alexandria, VA 22313-1450. DO NOT SEND FEES OR COMPLETED FORMS TO THIS ADDRESS. **SEND TO: Commissioner for Patents, P.O. Box 1450, Alexandria, VA 22313-1450.**

If you need assistance in completing the form, call 1-800-PTO-9199 and select option 2.

PTO/SB/131 (01-10)
Approved for use through 02/28/2011. OMB 0651-0020
U.S. Patent and Trademark Office; U. S. DEPARTMENT OF COMMERCE
Under the Paperwork Reduction Act of 1995, no persons are required to respond to a collection of information unless it displays a valid OMB control number.

Instruction Sheet for: REQUEST FOR RECALCULATION OF PATENT TERM ADJUSTMENT IN VIEW OF *WYETH**

(Not to be Submitted to the USPTO)

This form is only for requesting a recalculation of PTA for patents issued before March 2, 2010, if the sole basis for requesting the recalculation is the USPTO's pre-*Wyeth* interpretation of 35 U.S.C. 154(b)(2)(A).

This form must be filed within 180 days of the day the patent was granted, with the following exception:

> Patentees who received a decision from the USPTO under the USPTO's pre-Wyeth interpretation of 35 U.S.C. 154(b)(2)(A) may file a request for reconsideration of that decision if such a request for reconsideration is filed within **two months** of the date of the decision (37 CFR 1.181(f)). If the patentee's sole basis for requesting reconsideration of the decision is the USPTO's pre-Wyeth interpretation of 35 U.S.C. 154(b)(2)(A), the request for reconsideration need only state that reconsideration is being requested in view of Wyeth (this form may be used for this purpose if it is filed within **two months** of the date of the decision from the USPTO).

Do not use this form if the application has been allowed, but not yet issued as a patent.

1. **For patents issued before March 2, 2010:** A request for reconsideration under 37 CFR 1.705(d) and the fee set forth in 37 CFR 1.18(e) are not required, provided that the patentee's sole basis for requesting recalculation of the PTA in the patent is the USPTO's pre-*Wyeth* interpretation of 35 U.S.C. 154(b)(2)(A) and this form is filed within 180 days of the day the patent was granted.

2. **For patents issued on or after March 2, 2010 (do not use this form):** Patentees seeking a revised PTA in a patent issued on or after March 2, 2010, must file a request for reconsideration under 37 CFR 1.705(d) that complies with the requirements of 37 CFR 1.705(b)(1) and (b)(2) within two months of the day the patent issued.

For more information, see "Notice Concerning Calculation of the Patent Term Adjustment With Respect to the Overlapping Delay Provision of 35 U.S.C. 154(b)(2)(A)" available on the USPTO Web site at http://www.uspto.gov/patents/law/notices/2010.jsp.

**Wyeth v. Kappos*, No. 2009-1120 (Fed. Cir., Jan. 7, 2010).

Privacy Act Statement

The **Privacy Act of 1974 (P.L. 93-579)** requires that you be given certain information in connection with your submission of the attached form related to a patent application or patent. Accordingly, pursuant to the requirements of the Act, please be advised that: (1) the general authority for the collection of this information is 35 U.S.C. 2(b)(2); (2) furnishing of the information solicited is voluntary; and (3) the principal purpose for which the information is used by the U.S. Patent and Trademark Office is to process and/or examine your submission related to a patent application or patent. If you do not furnish the requested information, the U.S. Patent and Trademark Office may not be able to process and/or examine your submission, which may result in termination of proceedings or abandonment of the application or expiration of the patent.

The information provided by you in this form will be subject to the following routine uses:

1. The information on this form will be treated confidentially to the extent allowed under the Freedom of Information Act (5 U.S.C. 552) and the Privacy Act (5 U.S.C 552a). Records from this system of records may be disclosed to the Department of Justice to determine whether disclosure of these records is required by the Freedom of Information Act.
2. A record from this system of records may be disclosed, as a routine use, in the course of presenting evidence to a court, magistrate, or administrative tribunal, including disclosures to opposing counsel in the course of settlement negotiations.
3. A record in this system of records may be disclosed, as a routine use, to a Member of Congress submitting a request involving an individual, to whom the record pertains, when the individual has requested assistance from the Member with respect to the subject matter of the record.
4. A record in this system of records may be disclosed, as a routine use, to a contractor of the Agency having need for the information in order to perform a contract. Recipients of information shall be required to comply with the requirements of the Privacy Act of 1974, as amended, pursuant to 5 U.S.C. 552a(m).
5. A record related to an International Application filed under the Patent Cooperation Treaty in this system of records may be disclosed, as a routine use, to the International Bureau of the World Intellectual Property Organization, pursuant to the Patent Cooperation Treaty.
6. A record in this system of records may be disclosed, as a routine use, to another federal agency for purposes of National Security review (35 U.S.C. 181) and for review pursuant to the Atomic Energy Act (42 U.S.C. 218(c)).
7. A record from this system of records may be disclosed, as a routine use, to the Administrator, General Services, or his/her designee, during an inspection of records conducted by GSA as part of that agency's responsibility to recommend improvements in records management practices and programs, under authority of 44 U.S.C. 2904 and 2906. Such disclosure shall be made in accordance with the GSA regulations governing inspection of records for this purpose, and any other relevant (*i.e.*, GSA or Commerce) directive. Such disclosure shall not be used to make determinations about individuals.
8. A record from this system of records may be disclosed, as a routine use, to the public after either publication of the application pursuant to 35 U.S.C. 122(b) or issuance of a patent pursuant to 35 U.S.C. 151. Further, a record may be disclosed, subject to the limitations of 37 CFR 1.14, as a routine use, to the public if the record was filed in an application which became abandoned or in which the proceedings were terminated and which application is referenced by either a published application, an application open to public inspection or an issued patent.
9. A record from this system of records may be disclosed, as a routine use, to a Federal, State, or local law enforcement agency, if the USPTO becomes aware of a violation or potential violation of law or regulation.

UNITED STATES PATENT AND TRADEMARK OFFICE

UNITED STATES DEPARTMENT OF COMMERCE
United States Patent and Trademark Office
Address: COMMISSIONER FOR PATENTS
P.O. Box 1450
Alexandria, Virginia 22313-1450
www.uspto.gov

BACON & THOMAS, PLLC
625 SLATERS LANE
FOURTH FLOOR
ALEXANDRIA, VA 22314-1176

Mail Date: 09/14/2010

Applicant	: Stefan Simon Gustaaf Moriau	: DECISION ON REQUEST FOR
Patent Number	: 7665268	: RECALCULATION of PATENT
Issue Date	: 02/23/2010	: TERM ADJUSTMENT IN VIEW
Application No	: 11/979,105	: OF WYETH AND NOTICE OF INTENT TO
Filed	: 10/31/2007	: ISSUE CERTIFICATE OF CORRECTION
		:

The Request for Recalculation is **GRANTED** to the extent indicated.

The patent term adjustment has been determined to be **0** days. The USPTO will *sua sponte* issue a certificate of correction reflecting the amount of PTA days determined by the recalculation.

Prior to the issuance of the certificate of correction, the USPTO will afford patentee an opportunity to be heard and request reconsideration. Accordingly, patentee has **one month or thirty (30) days**, whichever is longer, to file a request for reconsideration of this patent term adjustment calculation. See 35 U.S.C. 154(b)(3)(B)(ii) and 37 CFR 1.322(a)(4). No extensions of time will be granted under 37 CFR 1.136.

Patentee should use document code PET.OP if electronically filing a request for reconsideration of this patent term adjustment calculation. The patentee must also include the information required by 37 CFR 1.705(b)(2) and the fee required by 37 CFR 1.18(e). If patentee does not file a timely request for reconsideration of this patent term adjustment calculation including the information required by 37 CFR 1.705(b)(2) and the fee required by 37 CFR 1.18(e), the USPTO will issue a certificate of correction reflecting the PTA determination noted above.

Patentee should be aware that in order to preserve the right to review in the United States District Court for the District of Columbia of the USPTO patent term adjustment determination, patentee must ensure that he or she also take the steps required under 35 U.S.C. 154(b)(4)(A) in a timely manner. Nothing in the request for recalculation should be construed as providing an alternative time frame for commencing a civil action under 35 U.S.C. 154(b)(4)(A).

Any questions concerning this decision should be directed to the Office of Patent Legal Administration at 571-272-7702.

Doc Code: PET.PTA.RCAL
Document Description: Request for Recalculation in view of Wyeth

PTO/SB/131 (01-10)
Approved for use through 02/28/2011. OMB 0651-0020
U.S. Patent and Trademark Office; U. S. DEPARTMENT OF COMMERCE
Under the Paperwork Reduction Act of 1995, no persons are required to respond to a collection of information unless it displays a valid OMB control number.

REQUEST FOR RECALCULATION OF PATENT TERM ADJUSTMENT IN VIEW OF *WYETH**

Attorney Docket Number: MOST3001AS/C/JEK	Patent Number: 7658048
Filing Date (or 371(b) or (f) Date): 2007-10-31	Issue Date: 2010-02-09
First Named Inventor: Stefan Simon Gustaaf Moriau	
Title: FLOOR PANELS WITH EDGE CONNECTORS	

PATENTEE HEREBY REQUESTS RECALCULATION OF THE PATENT TERM ADJUSTMENT (PTA) UNDER 35 USC 154(b) INDICATED ON THE ABOVE-IDENTIFIED PATENT. THE PATENTEE'S SOLE BASIS FOR REQUESTING THE RECALCULATION IS THE USPTO'S PRE-*WYETH* INTERPRETATION OF 35 U.S.C. 154(b)(2)(A).

Note: This form is only for requesting a recalculation of PTA for patents issued before March 2, 2010, if the sole basis for requesting the recalculation is the USPTO's pre-*Wyeth* interpretation of 35 U.S.C. 154(b)(2)(A). See Instruction Sheet on page 2 for more information.

Patentees are reminded that to preserve the right to review in the United States District Court for the District of Columbia of the USPTO's patent term adjustment determination, a patentee must ensure that he or she also takes the steps required under 35 U.S.C. 154(b)(3) and (b)(4) and 37 CFR 1.705 in a timely manner.

**Wyeth v. Kappos*, No. 2009-1120 (Fed. Cir., Jan. 7, 2010).

Signature /ThomasJMoore/	Date 2010-08-05
Name (Print/Typed) Thomas J. Moore	Registration Number 28974

***Note**: Signatures of all the inventors or assignees of record of the entire interest or their representative(s) are required in accordance with 37 CFR 1.33 and 11.18. Please see 37 CFR 1.4(d) for the form of the signature. If necessary, submit multiple forms for more than one signature, see below**.*

☐ *Total of _____ forms are submitted.

The information is required to obtain or retain a benefit by the public which is to file (and by the USPTO to process) an application. Confidentiality is governed by 35 U.S.C. 122 and 37 CFR 1.11 and 1.14. This collection is estimated to take 12 hours to complete, including gathering, preparing, and submitting the completed application form to the USPTO. Time will vary depending upon the individual case. Any comments on the amount of time you require to complete this form and/or suggestions for reducing this burden, should be sent to the Chief Information Officer, U.S. Patent and Trademark Office, U.S. Department of Commerce, P.O. Box 1450, Alexandria, VA 22313-1450. DO NOT SEND FEES OR COMPLETED FORMS TO THIS ADDRESS. **SEND TO: Commissioner for Patents, P.O. Box 1450, Alexandria, VA 22313-1450.**

If you need assistance in completing the form, call 1-800-PTO-9199 and select option 2.

PTO/SB/131 (01-10)
Approved for use through 02/28/2011. OMB 0651-0020
U.S. Patent and Trademark Office; U. S. DEPARTMENT OF COMMERCE
Under the Paperwork Reduction Act of 1995, no persons are required to respond to a collection of information unless it displays a valid OMB control number.

Instruction Sheet for: REQUEST FOR RECALCULATION OF PATENT TERM ADJUSTMENT IN VIEW OF *WYETH**

(Not to be Submitted to the USPTO)

This form is only for requesting a recalculation of PTA for patents issued before March 2, 2010, if the sole basis for requesting the recalculation is the USPTO's pre-*Wyeth* interpretation of 35 U.S.C. 154(b)(2)(A).

This form must be filed within 180 days of the day the patent was granted, with the following exception:

> Patentees who received a decision from the USPTO under the USPTO's pre-Wyeth interpretation of 35 U.S.C. 154(b)(2)(A) may file a request for reconsideration of that decision if such a request for reconsideration is filed within **two months** of the date of the decision (37 CFR 1.181(f)). If the patentee's sole basis for requesting reconsideration of the decision is the USPTO's pre-Wyeth interpretation of 35 U.S.C. 154(b)(2)(A), the request for reconsideration need only state that reconsideration is being requested in view of Wyeth (this form may be used for this purpose if it is filed within **two months** of the date of the decision from the USPTO).

Do not use this form if the application has been allowed, but not yet issued as a patent.

1. **For patents issued before March 2, 2010:** A request for reconsideration under 37 CFR 1.705(d) and the fee set forth in 37 CFR 1.18(e) are not required, provided that the patentee's sole basis for requesting recalculation of the PTA in the patent is the USPTO's pre-*Wyeth* interpretation of 35 U.S.C. 154(b)(2)(A) and this form is filed within 180 days of the day the patent was granted.

2. **For patents issued on or after March 2, 2010 (do not use this form):** Patentees seeking a revised PTA in a patent issued on or after March 2, 2010, must file a request for reconsideration under 37 CFR 1.705(d) that complies with the requirements of 37 CFR 1.705(b)(1) and (b)(2) within two months of the day the patent issued.

For more information, see "Notice Concerning Calculation of the Patent Term Adjustment With Respect to the Overlapping Delay Provision of 35 U.S.C. 154(b)(2)(A)" available on the USPTO Web site at http://www.uspto.gov/patents/law/notices/2010.jsp.

**Wyeth v. Kappos*, No. 2009-1120 (Fed. Cir., Jan. 7, 2010).

Privacy Act Statement

The **Privacy Act of 1974 (P.L. 93-579)** requires that you be given certain information in connection with your submission of the attached form related to a patent application or patent. Accordingly, pursuant to the requirements of the Act, please be advised that: (1) the general authority for the collection of this information is 35 U.S.C. 2(b)(2); (2) furnishing of the information solicited is voluntary; and (3) the principal purpose for which the information is used by the U.S. Patent and Trademark Office is to process and/or examine your submission related to a patent application or patent. If you do not furnish the requested information, the U.S. Patent and Trademark Office may not be able to process and/or examine your submission, which may result in termination of proceedings or abandonment of the application or expiration of the patent.

The information provided by you in this form will be subject to the following routine uses:

1. The information on this form will be treated confidentially to the extent allowed under the Freedom of Information Act (5 U.S.C. 552) and the Privacy Act (5 U.S.C 552a). Records from this system of records may be disclosed to the Department of Justice to determine whether disclosure of these records is required by the Freedom of Information Act.
2. A record from this system of records may be disclosed, as a routine use, in the course of presenting evidence to a court, magistrate, or administrative tribunal, including disclosures to opposing counsel in the course of settlement negotiations.
3. A record in this system of records may be disclosed, as a routine use, to a Member of Congress submitting a request involving an individual, to whom the record pertains, when the individual has requested assistance from the Member with respect to the subject matter of the record.
4. A record in this system of records may be disclosed, as a routine use, to a contractor of the Agency having need for the information in order to perform a contract. Recipients of information shall be required to comply with the requirements of the Privacy Act of 1974, as amended, pursuant to 5 U.S.C. 552a(m).
5. A record related to an International Application filed under the Patent Cooperation Treaty in this system of records may be disclosed, as a routine use, to the International Bureau of the World Intellectual Property Organization, pursuant to the Patent Cooperation Treaty.
6. A record in this system of records may be disclosed, as a routine use, to another federal agency for purposes of National Security review (35 U.S.C. 181) and for review pursuant to the Atomic Energy Act (42 U.S.C. 218(c)).
7. A record from this system of records may be disclosed, as a routine use, to the Administrator, General Services, or his/her designee, during an inspection of records conducted by GSA as part of that agency's responsibility to recommend improvements in records management practices and programs, under authority of 44 U.S.C. 2904 and 2906. Such disclosure shall be made in accordance with the GSA regulations governing inspection of records for this purpose, and any other relevant (*i.e.*, GSA or Commerce) directive. Such disclosure shall not be used to make determinations about individuals.
8. A record from this system of records may be disclosed, as a routine use, to the public after either publication of the application pursuant to 35 U.S.C. 122(b) or issuance of a patent pursuant to 35 U.S.C. 151. Further, a record may be disclosed, subject to the limitations of 37 CFR 1.14, as a routine use, to the public if the record was filed in an application which became abandoned or in which the proceedings were terminated and which application is referenced by either a published application, an application open to public inspection or an issued patent.
9. A record from this system of records may be disclosed, as a routine use, to a Federal, State, or local law enforcement agency, if the USPTO becomes aware of a violation or potential violation of law or regulation.

UNITED STATES PATENT AND TRADEMARK OFFICE

UNITED STATES DEPARTMENT OF COMMERCE
United States Patent and Trademark Office
Address: COMMISSIONER FOR PATENTS
P.O. Box 1450
Alexandria, Virginia 22313-1450
www.uspto.gov

BACON & THOMAS, PLLC
625 SLATERS LANE
FOURTH FLOOR
ALEXANDRIA, VA 22314-1176

Mail Date: 09/03/2010

Applicant	: Stefan Simon Gustaaf Moriau	: DECISION ON REQUEST FOR
Patent Number	: 7658048	: RECALCULATION of PATENT
Issue Date	: 02/09/2010	: TERM ADJUSTMENT IN VIEW
Application No	: 11/979,106	: OF WYETH AND NOTICE OF INTENT TO
Filed	: 10/31/2007	: ISSUE CERTIFICATE OF CORRECTION
		:

The Request for Recalculation is **GRANTED** to the extent indicated.

The patent term adjustment has been determined to be **0** days. The USPTO will *sua sponte* issue a certificate of correction reflecting the amount of PTA days determined by the recalculation.

Prior to the issuance of the certificate of correction, the USPTO will afford patentee an opportunity to be heard and request reconsideration. Accordingly, patentee has **one month or thirty (30) days**, whichever is longer, to file a request for reconsideration of this patent term adjustment calculation. See 35 U.S.C. 154(b)(3)(B)(ii) and 37 CFR 1.322(a)(4). No extensions of time will be granted under 37 CFR 1.136.

Patentee should use document code PET.OP if electronically filing a request for reconsideration of this patent term adjustment calculation. The patentee must also include the information required by 37 CFR 1.705(b)(2) and the fee required by 37 CFR 1.18(e). If patentee does not file a timely request for reconsideration of this patent term adjustment calculation including the information required by 37 CFR 1.705(b)(2) and the fee required by 37 CFR 1.18(e), the USPTO will issue a certificate of correction reflecting the PTA determination noted above.

Patentee should be aware that in order to preserve the right to review in the United States District Court for the District of Columbia of the USPTO patent term adjustment determination, patentee must ensure that he or she also take the steps required under 35 U.S.C. 154(b)(4)(A) in a timely manner. Nothing in the request for recalculation should be construed as providing an alternative time frame for commencing a civil action under 35 U.S.C. 154(b)(4)(A).

Any questions concerning this decision should be directed to the Office of Patent Legal Administration at 571-272-7702.

UNITED STATES PATENT AND TRADEMARK OFFICE

Commissioner for Patents
United States Patent and Trademark Office
P.O. Box 1450
Alexandria, VA 22313-1450
www.uspto.gov

FOLEY AND LARDNER LLP
SUITE 500
3000 K STREET NW
WASHINGTON DC 20007

MAILED

OCT 06 2010

OFFICE OF PETITIONS

In re Application of	:	
Avner et al.	:	
Application No. 11/979,151	:	DECISION ON PETITION
Filed: October 31, 2007		TO WITHDRAW FROM RECORD
Attorney Docket No. 040065-0107	:	
	:	

This is a decision on the Request to Withdraw as attorney or agent of record under 37 C.F.R. § 1.36(b), filed July 29, 2010.

The request is **APPROVED**.

A grantable request to withdraw as attorney/agent of record must be signed by every attorney/agent seeking to withdraw or contain a clear indication that one attorney is signing on behalf of another/others. The Office will require the practitioner(s) to certify that he, she or they have: (1) given reasonable notice to the client, prior to the expiration of the reply period, which the practitioner(s) intends to withdraw from employment; (2) delivered to the client or a duly authorized representative of the client all papers and property (including funds) to which the client is entitled; and (3) notified the client of any replies that may be due and the time frame within which the client must respond, pursuant to 37 CFR 10.40 (c).

The request was signed by Michele M. Simkin on behalf of all attorneys of record who are associated with Customer Number 22428.

All attorneys/agents associated with the Customer Number 22428 have been withdrawn. Applicants are reminded that there is no attorney of record at this time.

All future correspondence will be directed to the first named inventor at the address indicated below.

Currently, there is an outstanding Office action mailed June 15, 2010 that requires a reply.

Telephone inquiries concerning this decision should be directed to the undersigned at (571) 272-7751. All other inquires concerning either the examination or status of the application should be directed to the Technology Center.

Joan Olszewski

Joan Olszewski
Petitions Examiner
Office of Petitions

cc: David B. Avner
2769 Southshire Rd.
Highlands Ranch, CO 80126

UNITED STATES PATENT AND TRADEMARK OFFICE

UNITED STATES DEPARTMENT OF COMMERCE
United States Patent and Trademark Office
Address: COMMISSIONER FOR PATENTS
P.O. Box 1450
Alexandria, Virginia 22313-1450
www.uspto.gov

APPLICATION NO.	FILING DATE	FIRST NAMED INVENTOR	ATTORNEY DOCKET NO.	CONFIRMATION NO.
11/979,152	10/31/2007	Elly Bak	018786-0141	7962

7590 11/02/2010
FOLEY AND LARDNER LLP
SUITE 500
3000 K STREET NW
WASHINGTON, DC 20007

EXAMINER
PARA, ANNETTE H

ART UNIT	PAPER NUMBER
1661	

MAIL DATE	DELIVERY MODE
11/02/2010	PAPER

ACKNOWLEDGEMENT OF REQUEST

Notice of Allowance/Allowability Mailed

The request to print a color drawing reference as the first paragraph in the portion of the specification containing a brief description of the drawings as required by 37 CFR 1.84 and MPEP § 608.02 has been received by the United States Patent and Trademark Office and will be entered into the specification.

571-272-4200 or 1-888-786-0101
Application Assistance Unit
Office of Data Management

FORM PTOM327-5 (Rev. 02/08)

UNITED STATES PATENT AND TRADEMARK OFFICE

Commissioner for Patents
United States Patent and Trademark Office
P.O. Box 1450
Alexandria, VA 22313-1450
www.uspto.gov

November 1, 2010

FOLEY AND LARDNER LLP
SUITE 500
3000 K STREET NW
WASHINGTON DC 20007

In re Application of	:	
Elly Bak, et al	:	**DECISION ON PETITION**
Application No. 11979152	:	
Filed: 10/31/2007	:	***ACCEPTANCE OF COLOR***
Attorney Docket No. **018786-0141**	:	***DRAWINGS***

This is a decision on the Petition to Accept Color Drawings under 37 C.F.R 1.84 (a) (2), received in the United States Patent and Trademark Office (USPTO) October 31, 2007.

The petition is **GRANTED**.

A grantable petition under 37 C.F.R. 1.84(a) (2) must be accompanied by the following.

1. The fee set forth under 37 C.F.R. 1.17(h),
2. Three (3) sets of the color drawings in question, or (1) set if filed via EFS, and
3. The specification containing the following language as the first paragraph in that portion of the specification relating to the brief description of the drawings.

   "The file of this patent contains at least one drawing executed in color. Copies of this patent with color drawing(s) will be provided by the Patent and Trademark Office upon request and payment of the necessary fee."

The petition was accompanied by all of the required fees and drawings. The specification contains the appropriate language. Therefore, the petition is GRANTED.

Telephone inquires relating to this decision may be directed to the undersigned in the Office of Data Management at 571-272-4200.

/Kimberly Terrell/
Manager
Office of Data Management
Publications Branch

UNITED STATES PATENT AND TRADEMARK OFFICE

Commissioner for Patents
United States Patent and Trademark Office
P.O. Box 1450
Alexandria, VA 22313-1450
www.uspto.gov

MAILED
DEC 06 2011
OFFICE OF PETITIONS

EITAN MEHULAL LAW GROUP
10 Abba Eban Blvd. PO Box 2081
Herzlia 46120 IL ISRAEL

In re Application of	:	
Boaz Eitan	:	
Application No. 11/979,183	:	DECISION ON PETITION
Filed: October 31, 2007	:	
Attorney Docket No. P-1164-US4C	:	

This is a decision on the petition under the unintentional provisions of 37 CFR 1.137(b), filed November 17, 2011, to revive the above-identified application.

The petition is **DISMISSED**.

Any request for reconsideration of this decision must be submitted within TWO (2) MONTHS from the mail date of this decision. Extensions of time under 37 CFR 1.136(a) are permitted. The reconsideration request should include a cover letter entitled "Renewed Petition under 37 CFR 1.137(b)." This is **not** a final agency action within the meaning of 5 U.S.C. § 704.

This application became abandoned for failure to timely pay the issue and publication fees on or before October 19, 2011, as required by the Notice of Allowance and Fee(s) Due, mailed July 19, 2011. Accordingly, the date of abandonment of this application is October 22, 2011. A Notice of Abandonment was mailed on November 3, 2011.

A grantable petition under 37 CFR 1.137(b) must be accompanied by: (1) the required reply, unless previously filed; (2) the petition fee as set forth in 37 CFR 1.17(m); (3) a statement that the entire delay in filing the required reply from the due date for the reply until the filing of a grantable petition pursuant to 37 CFR 1.137(b) was unintentional; and (4) any terminal disclaimer (and fee as set forth in 37 CFR 1.20(d)) required by 37 CFR 1.137(d). Where there is a question as to whether either the abandonment or the delay in filing a petition under 37 CFR 1.137 was unintentional, the Director may require additional information. See MPEP 711.03(c)(II)(C) and (D). The instant petition lacks item (1).

As to item (1) the current issue fee in the amount of $1,740 has been received. However, the publication fee of $300 has not been paid. There was no current authorization to charge any additional fees that may be due with the handling of this petition.

Further correspondence with respect to this matter should be addressed as follows:

By Mail: Mail Stop PETITION
Commissioner for Patents
P. O. Box 1450
Alexandria, VA 22313-1450

By hand: U. S. Patent and Trademark Office
Customer Service Window, Mail Stop Petitions
Randolph Building
401 Dulany Street
Alexandria, VA 22314

The centralized facsimile number is **(571) 273-8300.**

Telephone inquiries concerning this decision should be directed to Kimberly Inabinet at (571) 272-4618.

/Kimberly Inabinet/

Kimberly Inabinet
Petitions Examiner
Office of Petitions

UNITED STATES PATENT AND TRADEMARK OFFICE

Commissioner for Patents
United States Patent and Trademark Office
P.O. Box 1450
Alexandria, VA 22313-1450
www.uspto.gov

EITAN MEHULAL LAW GROUP
10 Abba Eban Blvd. PO Box 2081
Herzlia 46120 IL ISRAEL

MAILED
DEC 30 2011
OFFICE OF PETITIONS

In re Application of	:	
Boaz Eitan	:	
Application No. 11/979,183	:	DECISION ON PETITION
Filed: October 31, 2007	:	
Attorney Docket No. P-1164-US4C	:	

This is a decision on the renewed petition under the unintentional provisions of 37 CFR 1.137(b), filed December 13, 2011, to revive the above-identified application.

The petition is **GRANTED**.

This application became abandoned for failure to timely pay the issue and publication fees on or before October 19, 2011, as required by the Notice of Allowance and Fee(s) Due, mailed July 19, 2011. Accordingly, the date of abandonment of this application is October 20, 2011. A Notice of Abandonment was mailed on November 3, 2011.

The petition satisfies the requirements of 37 CFR 1.137(b) in that petitioner has supplied (1) the reply in the form of payment of the issue fee of $1,740 and the publication fee of $300, (2) the petition fee of $1,860, and (3) a proper statement of unintentional delay. Accordingly, the issue and publication fees are accepted as being unintentionally delayed.

Telephone inquiries concerning this decision should be directed to Kimberly Inabinet at (571) 272-4618.

This application is being referred to the Office of Data Management for further processing into a patent.

/Kimberly A. Inabinet/

Kimberly A. Inabinet
Petitions Examiner
Office of Petitions

UNITED STATES PATENT AND TRADEMARK OFFICE

UNITED STATES DEPARTMENT OF COMMERCE
United States Patent and Trademark Office
Address: COMMISSIONER FOR PATENTS
P.O. Box 1450
Alexandria, Virginia 22313-1450
www.uspto.gov

APPLICATION NO.	FILING DATE	FIRST NAMED INVENTOR	ATTORNEY DOCKET NO.	CONFIRMATION NO.
11/979,253	10/31/2007	Tuula Ryde	029318-1618	6324

31049 7590 05/05/2011
Elan Drug Delivery, Inc. c/o Foley & Lardner
3000 K Street, N.W.
Suite 500
Washington, DC 20007-5109

EXAMINER
AHMED, HASAN SYED

ART UNIT	PAPER NUMBER
1615	

MAIL DATE	DELIVERY MODE
05/05/2011	PAPER

Please find below and/or attached an Office communication concerning this application or proceeding.

The time period for reply, if any, is set in the attached communication.

UNITED STATES PATENT AND TRADEMARK OFFICE

Commissioner for Patents
United States Patent and Trademark Office
P.O. Box 1450
Alexandria, VA 22313-1450
www.uspto.gov

MAY 0 5 2011

Elan Drug Delivery, Inc.
c/o Foley & Lardner
3000 K Street, N.W.
Suite 500
Washington DC 20007-5109

In re Application of:
Ryde et al.
Serial No.: 11/979,253
Filed: October 31, 2007
Attorney Docket No.: **029318-1618**

: PETITION DECISION

This is in response to the petition under 37 CFR § 1.181, filed April 7, 2011, requesting that the Examiner's Answer of March 30, 2011 be designated as having a new ground of rejection.

BACKGROUND

Only the Office action(s) pertinent to the petition will be discussed herein.

The examiner mailed an Examiner's answer on March 30, 2011. At the time of this Office action, claims 1, 2, 6-9, 11-14 and 16-19 were on appeal. Claims 1, 2, 6-9, 11-14, and 16-19 were rejected under 35 U.S.C. 103(a) as being unpatentable over U.S. Patent No. 5,552,160 ("Liversidge ") (cited in the IDS filed on 11 March 2008) in view of U.S Patent No. 6,375,986 ("Ryde") (cited in the IDS filed on 11 March 2008), further in view of U.S. Patent No. 4,783,484 ("Violante") (cited in the IDS filed on 11 March 2008). Claims 1, 2, 6-9, 11-14, and 16-19 were provisionally rejected on the ground of nonstatutory obviousness-type double patenting as being unpatentable over claims 3, 12, and 18 of copending Application No. 10/420,927 ("'927") in view of U.S. Patent No. 6,428,814 ("Bosch") (cited in the IDS filed on 11 March 2008). Claims 1, 2, 6-9, 11-14, and 16-19 were provisionally rejected on the ground of nonstatutory obviousness-type double patenting as being unpatentable over claims 113-119 and 122-151 of copending Application No. 10/878,623 ('623). Claims 1, 2, 6-9, 11-14, and 16-19 were provisionally rejected on the ground of nonstatutory obviousness-type double patenting as being unpatentable over claims 113-131 of copending Application No. 11/093,149 ('149). Claims 1, 2, 6-9, 11-14, and 16-19 were provisionally rejected on the ground of nonstatutory obviousness-

type double patenting as being unpatentable over claims 1-3, 5-35, 37, 39, 41, and 43-45 of copending Application No. 10/619,539 ('539). Claims 1, 2, 6-9, 11-14, and 16-19 were provisionally rejected on the ground of nonstatutory obviousness-type double patenting as being unpatentable over claims 1-24 and 36-39 of copending Application No. 10/701,064 ('064). Claims 1, 2, 6-9, 11-14, and 16-19 were provisionally rejected on the ground of nonstatutory obviousness-type double patenting as being unpatentable over claims 1-3, 5-8, 9-14, 17-22, 28-41, and 43-47 of copending Application No. 10/697,716 ('716).

In response thereto, applicants filed this petition on April 7, 2011, requesting that the Examiner's Answer of March 30, 2011 be designated as having a new grounds of rejection.

DISCUSSION

The petition and the file history have been carefully considered.

Petitioners argue that "Now, for the first time in the Examiner's Answer issued on 30 March 2011, the Examiner advances two different interpretations of Liversidge regarding the claim limitation of viscosity. First, the Examiner states that "the viscosity of a final product derived from the teachings of Liversidge will necessarily be higher than the viscosity recited in claim 1" (page 14, 1st paragraph); and second, the Examiner concludes "it would [be] a matter of routine optimization for a person of ordinary skill in the art to adjust the viscosity of the final product according to the route of administration" (page 13, 11-13).

In comparison to the prior Office Actions, which contained one paragraph of conclusory statements regarding the viscosity of the premix, the Examiner for the first time and after prosecution has closed, provides two different interpretations of Liversidge in support the rejection regarding the claimed viscosity. These two vastly different interpretations/rationales in support of the rejection will not only require a completely different analysis of the Liversidge art but also an analysis of the state of the prior art at the time of Liversidge (to determine whether it would be routine optimization to modify the viscosity). In fact, the nature of the Examiner's new interpretations/rationales is one that is likely to elicit submission of evidence by Appellants, who are procedurally precluded from such submissions at this time."

Applicants' arguments have been carefully considered but they are not persuasive. At the outset, it is noted that appellants' have mischaracterized the examiner's statement at page 14, 1st paragraph of the examiner's answer. The language from the examiner's answer which appellants have quoted in the petition is a partial quote. The statement quoted in the petition suggests that the examiner was making an affirmative statement that the viscosity of a final product derived from the teachings of Liversidge will necessarily be higher than the viscosity recited in claim 1. This is not the case. The whole sentence reads as such: "Finally, appellants have not demonstrated that the viscosity of a final product derived from the teachings of Liversidge will necessarily be higher than the viscosity recited in claim 1." Thus, it is clear that the point being made was not an affirmative statement regarding a disclosure in the Liversidge reference; rather, the statement indicates that appellants have not provided evidence to suggest that what they are

claiming is any different from what Liversidge is teaching with respect to the viscosity of Liversidge's final product.
With respect to appellants' substantive argument, the following is a quotation from MPEP 1207.03(III):SITUATIONS THAT ARE NOT CONSIDERED AS NEW GROUNDS OF REJECTION

> *There is no new ground of rejection when the basic thrust of the rejection remains the same such that an appellant has been given a fair opportunity to react to the rejection. See In re Kronig, 539 F.2d 1300, 1302-03, 190 USPQ 425, 426-27 (CCPA 1976). Where the statutory basis for the rejection remains the same, and the evidence relied upon in support of the rejection remains the same, a change in the discussion of, or rationale in support of, the rejection does not necessarily constitute a new ground of rejection. Id. At 1303, 190 USPQ at 427 (reliance upon fewer references in affirming a rejection under 35 U.S.C. 103 does not constitute a new ground of rejection).*

It is respectively submitted that the statutory basis for the rejection has remained the same throughout prosecution; i.e. the evidence relied upon has remained the same, namely, the sections of the Liversidge reference cited in the paragraph bridging pages 4 and 5 of the examiner's answer. It is noted Appellants do not deny this. Rather, they state that the examiner is presenting "...vastly different interpretations/rationales in support of the rejection..." (see language quoted above). However, as indicated in the language quoted from MPEP 1207.03, "[w]here the statutory basis for the rejection remains the same, and the evidence relied upon in support of the rejection remains the same, a change in the discussion of, or rationale in support of, the rejection does not necessarily constitute a new ground of rejection." Since a change in rationale in support of the rejection does not necessarily constitute a new ground of rejection, it is decided that the Examiner's Answer of March 30, 2011 is not seen to raise a new ground of rejection and will not be designated as having such new grounds of rejection contained therein.

DECISION

The petition is **DENIED.**

Any new or renewed petition must be filed within TWO MONTHS of the mail date of this decision.

Should there be any questions about this decision please contact Marianne C. Seidel, by letter addressed to Director, TC 1600, at the address listed above, or by telephone at 571-272-0584 or by facsimile sent to the general Office facsimile number, 571-273-8300.

George C. Elliott

George Elliott
Director, Technology Center 1600

UNITED STATES PATENT AND TRADEMARK OFFICE

Commissioner for Patents
United States Patent and Trademark Office
P.O. Box 1450
Alexandria, VA 22313-1450
www.uspto.gov
DIW Mar-11

ANDREWS KURTH LLP
1350 I STREET, N.W.
SUITE 1100
WASHINGTON DC 20005

MAILED

MAR 03 2011

OFFICE OF PETITIONS

In re Application of :
David H. Warren :
Application Number: 11/979,259 :
Filing Date: 10/31/2007 :
Attorney Docket Number: 177846 :
:

ON PETITION

This is a decision in response to the petition under 37 CFR 1.137(b) filed on December 21, 2010, to revive the above-identified application.

The petition is **GRANTED**.

This application became abandoned on November 24, 2010, for failure to timely submit corrected drawings in response to the Notice of Allowability mailed on August 23, 2010, which set a three (3) month statutory period for reply. Notice of Abandonment was mailed on December 10, 2010.

Receipt of the one (1) sheet of corrected drawings filed on December 21, 2010 is acknowledged.

The application is referred to the Office of Data Management for Processing into a patent.

Telephone inquiries concerning this matter may be directed to the undersigned at (571) 272-3231.

DWood

Douglas I. Wood
Senior Petitions Attorney
Office of Petitions

UNITED STATES PATENT AND TRADEMARK OFFICE

Commissioner for Patents
United States Patent and Trademark Office
P.O. Box 1450
Alexandria, VA 22313-1450
www.uspto.gov

FOLEY AND LARDNER LLP
SUITE 500
3000 K STREET NW
WASHINGTON DC 20007

MAILED
JAN 03 2012
OFFICE OF PETITIONS

In re Application of	:	
HOUZE et al.	:	
Application No. 11/979,263	:	DECISION ON APPLICATION
Filed: October 31, 2007	:	FOR
Atty Docket No. 041457-0779	:	PATENT TERM ADJUSTMENT

This is a decision on the "REQUEST FOR RECONSIDERATION OF THE PATENT TERM ADJUSTMENT UNDER 37 C.F.R. §1.705" filed December 15, 2011, which is properly treated as a petition under 37 CFR 1.705(b). Applicants request correction of the patent term adjustment from zero (0) days to four hundred thirty-six (436) days (106 days of "A delay" + 513 days of "B delay" - 183 days of applicant delay). Applicants' request is partly on the basis of the Office taking in excess of three years to issue the patent.

The request for reconsideration of the patent term adjustment is **GRANTED to the extent indicated herein.**

The Office has updated the PALM and PAIR screens to reflect that the patent term adjustment determination at the time of the mailing of the notice of allowance is **zero (0) days (106 days of "A delay" - 183 days of applicant delay)**. A copy of the updated PAIR screen, showing the corrected determination, is enclosed.

To the extent that the instant application for patent term adjustment requests reconsideration of the patent term adjustment as it relates to the Office's failure to issue the patent within three years of the filing date, the application for patent term adjustment under 37 CFR 1.705(b) is **DISMISSED as PREMATURE**.

Knowledge of the actual date the patent issues is required to calculate the amount, if any, of additional patent term patentee is entitled to for Office failure to issue the patent within three years. See § 1.702(b). (This is true even where a request for continued examination (RCE) was filed). The computer will not undertake the § 1.702(b) calculation until the actual date of issuance of the patent has been determined. Likewise, the computer will not calculate any further Office delay under § 1.702(a)(4) or applicant delay under § 1.704(c)(10) until the actual date of issuance of the patent has been determined. As such, the Office can not make a determination on the correctness of the patent term adjustment until the patent has issued.

Requesting reconsideration of the patent term adjustment to be indicated on the patent under 37 CFR 1.705(b) based on the initial determination of patent term adjustment and a projected issuance date of the patent (or even the filing date of the request for continued examination) is premature. Accordingly, it is appropriate to dismiss as premature such a request.

Rather than file an application for patent term adjustment under 37 CFR 1.705(b) contesting the 37 CFR 1.702(b) calculation at the time of the mailing of the notice of allowance, applicant is advised that they may wait until the time of the issuance of the patent and file a request for reconsideration of the patent term adjustment pursuant to 37 CFR 1.705(d). As the USPTO does not calculate the amount of time earned pursuant to 37 CFR 1.702(b) until the time of the issuance of the patent, the Office will consider any request for reconsideration of the patent term adjustment due to an error in the calculation of 37 CFR 1.702(b) to be timely if the request for reconsideration is filed within two months of the issuance of the patent. However, as to all other bases for contesting the initial determination of patent term adjustment received with the notice of allowance, applicant must timely file an application for patent term adjustment prior to the payment of the issue fee[1].

---

[1] For example, if applicant disputes both the calculation of patent term adjustment under 37 CFR 1.702(a)(1) for Office failure to mail a first Office action or notice of allowance not later than fourteen months after the date on which the application was filed and under 37 CFR 1.702(b) for Office failure to issue a patent within three years of the actual filing date of the application, then applicant must still timely file an application for patent term adjustment prior to the payment of the issue fee to contest the calculation of Office delay in issuing a first Office action or notice of allowance. See 37 CFR 1.705(b) and 35 U.S.C. 154(b)(3)(B). A dispute as to

On September 16, 2011, the Office mailed the Determination of Patent Term Adjustment under 35 U.S.C. 154(b) in the above-identified application. The Notice stated that the patent term adjustment to date was 0 days.

Applicants dispute the reduction of 82 days for applicant delay in responding to the non-final Office action mailed July 17, 2009. Applicants assert that the reply was filed on October 14, 2009, and thus, the reduction pursuant to 37 CFR 1.704(b) should be zero (0) days. Further, applicants contend that given receipt of the reply on October 14, 2009, a period of adjustment of 50 days should be entered for Office delay in not mailing an Office action in response until April 5, 2010. In support thereof, applicants submit a copy of their itemized and date-stamped return postcard, associated with the filing of the reply.

Consideration of applicants' evidence is unnecessary. A review of the application file confirms that the reply was filed on October 14, 2009. A copy of the reply, presumably at the examiner's request, was submitted to the Office on January 7, 2010. Under these circumstances, the date of receipt of the reply on October 14, 2009, should be used for purposes of calculating compliance with 37 CFR 1.704(b). The response was complete and proper and was filed within the three-month period under 37 CFR 1.704(b). Thus, the Office should not have assessed applicants any delay for its filing. Accordingly, the period of reduction of 82 days for applicant delay is being removed.

Applicants are also correct that a period of adjustment of 50 days should be entered for Office delay. The reply under § 1.111 was filed on October 14, 2009; however, the Office did not respond with the mailing of the final Office action until April 5, 2010, four months and 50 days later. See 37 CFR 1.702(a)(2) and 1.703(a)(2). Accordingly, a period of adjustment for Office delay of 50 days is being entered.

Furthermore, after reviewing applicants' Patent Tern Adjustment Calculation Sheet, it appears that applicants believe the patent term adjustment should be reduced by 91 days, instead of 29

---

the calculation of the § 1.702(a)(1) period raised on request for reconsideration of patent term adjustment under 37 CFR 1.705(d) will be dismissed as untimely filed.

days, pursuant to 37 CFR 1.704(b), for the period of time in excess of three months that was taken to reply to a final Office action mailed April 5, 2010.

The record reveals that the Office mailed a final Office action on April 5, 2010. In response, applicants filed an amendment on August 3, 2010, which failed to place the application in condition for allowance. Thereafter, on October 4, 2010, applicants filed a notice of appeal. The notice of appeal, filed October 4, 2010, was not received within three months of the mailing of the final Office action. In accordance with 37 CFR 1.704(b), the period of adjustment of the term of the patent should have been reduced by 91 days (not 29 day), counting the number of days in the period beginning on the day after the date that is three months after the date of mailing of the Office action under 35 U.S.C. 132, July 6, 2010, and ending on the date the notice of appeal was filed, October 4, 2010. Accordingly, the period of reduction of 29 days is being removed and a period of reduction of 91 days is being entered.

Lastly, applicants disclose that the Office should not have been assessed 18 days of Office delay pursuant to 37 CFR 1.702(a)(2) for failing to respond to a reply under 35 U.S.C. 132 not later than four months after the date on which the reply was filed.

Pursuant to 37 CFR 1.703(a)(3), the period of adjustment under § 1.702(a) is:

> The number of days, if any, in the period beginning on the day after the date that is four months after the date a reply in compliance with § 1.113(c) was filed and ending on the date of mailing of either an action under 35 U.S.C. 132, or a notice of allowance under 35 U.S.C. 151, whichever occurs first[.]

In this instance, the Office mailed a non-final Office action on December 21, 2010, within four months of the filing of a reply in compliance with 37 CFR 1.113(c) on October 4, 2010. As the Office took action within the specified time frame set forth in 37 CFR 1.702(a)(2), the period of adjustment of 18 days for Office delay is not warranted and is being removed.

In view thereof, the patent term adjustment determination at the time of the mailing of the notice of allowance is **zero (0) days (106 days of "A delay" - 183 days of applicant delay)**.

The Office will charge the Deposit Account the $200.00 fee set forth in 37 CFR 1.18(e) for consideration of the present petition. No additional fee is required.

The Office of Data Management has been advised of this decision. This matter is being referred to the Office of Data Management for issuance of the patent.

Telephone inquiries specific to this matter should be directed to the undersigned at (571) 272-3211.

Christina Tartera Donnell

Christina Tartera Donnell
Senior Petitions Attorney
Office of Petitions

Enclosure: Copy of updated PAIR screen

11/979,263	ENHANCED DRUG DELIVERY IN TRANSDERMAL SYSTEMS	041457-0779	12-29-2011::14:41:41

Patent Term Adjustments

Patent Term Adjustment (PTA) for Application Number: 11/979,263

Filing or 371(c) Date:	10-31-2007	Overlapping Days Between {A and B} or {A and C}:	0
Issue Date of Patent:	-	Non-Overlapping USPTO Delays:	74
A Delays:	74	PTO Manual Adjustments:	52
B Delays:	0	Applicant Delays:	203
C Delays:	0	Total PTA Adjustments:	0

Patent Term Adjustment History **Explanation Of Calculations**

Number	Date	Contents Description	PTO (Days)	APPL (Days)	Start
101	12-22-2011	Adjustment of PTA Calculation by PTO	50		0
100	12-22-2011	Adjustment of PTA Calculation by PTO		18	0
99	12-22-2011	Adjustment of PTA Calculation by PTO		91	0
98	12-22-2011	Adjustment of PTA Calculation by PTO	29		0
97	12-22-2011	Adjustment of PTA Calculation by PTO	82		0
88	09-16-2011	Mail Notice of Allowance			0
87	09-14-2011	Office Action Review			0
86	09-14-2011	Office Action Review			0
85	09-14-2011	Document Verification			0
84	09-14-2011	Issue Revision Completed			0
83	09-14-2011	Notice of Allowance Data Verification Completed			0
82	09-14-2011	Case Docketed to Examiner in GAU			0
81	09-10-2011	Reasons for Allowance			0
80	09-10-2011	Allowability Notice			0
77	06-21-2011	Information Disclosure Statement considered			0
76	06-21-2011	Reference capture on IDS			0
75	06-21-2011	Information Disclosure Statement (IDS) Filed		1	71
74	06-20-2011	Reference capture on IDS			0

73	06-21-2011	Information Disclosure Statement (IDS) Filed			0
72	07-07-2011	Date Forwarded to Examiner			0
71	06-20-2011	Response after Non-Final Action		91	68
70	06-20-2011	Request for Extension of Time - Granted			0
69	06-21-2011	Information Disclosure Statement (IDS) Filed			0
68	12-21-2010	Mail Non-Final Rejection	18		48
67	12-17-2010	Non-Final Rejection			0
66	12-10-2010	PARALEGAL OR ELECTRONIC TERMINAL DISCLAIMER APPROVED			0
65	12-03-2010	Terminal Disclaimer Filed			0
64	12-07-2010	Date Forwarded to Examiner			0
63	12-03-2010	Amendment/Argument after Notice of Appeal			0
62	11-08-2010	Mail Advisory Action (PTOL - 303)			0
61	11-05-2010	Advisory Action (PTOL-303)			0
60	10-29-2010	Paralegal TD Not accepted			0
59	10-04-2010	Terminal Disclaimer Filed			0
58	10-13-2010	Date Forwarded to Examiner			0
57	10-04-2010	Amendment/Argument after Notice of Appeal			0
56	10-04-2010	Notice of Appeal Filed			0
55	10-04-2010	Request for Extension of Time - Granted			0
54	10-13-2010	Change in Power of Attorney (May Include Associate POA)			0
53	08-31-2010	Mail Advisory Action (PTOL - 303)			0
52	08-30-2010	Advisory Action (PTOL-303)			0
51	08-23-2010	Paralegal TD Not accepted			0
50	08-03-2010	Terminal Disclaimer Filed		0	48
49	08-04-2010	Date Forwarded to Examiner			0

48	08-03-2010	Amendment after Final Rejection		29	46
47	08-03-2010	Request for Extension of Time - Granted			0
46	04-05-2010	Mail Final Rejection (PTOL - 326)			0
45	04-01-2010	Final Rejection			0
44	10-14-2009	Information Disclosure Statement considered			0
43	10-14-2009	Information Disclosure Statement (IDS) Filed			0
42	01-28-2010	Request for Refund			0
41	01-07-2010	Information Disclosure Statement (IDS) Filed		0	39
40	02-03-2010	Date Forwarded to Examiner			0
39	01-07-2010	Response after Non-Final Action		82	34
37	11-10-2009	Case Docketed to Examiner in GAU			0
36	02-13-2009	Reference capture on IDS			0
35	02-13-2009	Information Disclosure Statement (IDS) Filed			0
34	07-17-2009	Mail Non-Final Rejection			0
33	07-06-2009	Non-Final Rejection			0
29	03-27-2009	Information Disclosure Statement considered			0
28	02-13-2009	Information Disclosure Statement considered			0
27	03-27-2009	Reference capture on IDS			0
26	03-27-2009	Information Disclosure Statement (IDS) Filed		0	24
25	05-15-2009	Date Forwarded to Examiner			0
24	03-27-2009	Response to Election / Restriction Filed			0
23	03-27-2009	Information Disclosure Statement (IDS) Filed			0
22	02-25-2009	Mail Restriction Requirement	56		0.5
21	02-20-2009	Restriction/Election Requirement			0
20	02-13-	Information Disclosure Statement (IDS) Filed			0

	2009		
19	12-22-2008	Case Docketed to Examiner in GAU	0
18	07-28-2008	Case Docketed to Examiner in GAU	0
17	07-10-2008	PG-Pub Issue Notification	0
16	06-07-2008	IFW TSS Processing by Tech Center Complete	0
15	10-31-2007	Preliminary Amendment	0
14	04-21-2008	Application Dispatched from OIPE	0
13	04-03-2008	Sent to Classification Contractor	0
12	04-03-2008	Filing Receipt - Updated	0
11	04-03-2008	Application Is Now Complete	0
10	03-20-2008	Additional Application Filing Fees	0
9	03-20-2008	Applicant has submitted new drawings to correct Corrected Papers problems	0
8	03-20-2008	Applicant has submitted a new specification to correct Corrected Papers problems	0
7	01-29-2008	Filing Receipt	0
6	01-29-2008	Corrected Paper	0
5	01-22-2008	Cleared by L&R (LARS)	0
4	11-09-2007	Referred to Level 2 (LARS) by OIPE CSR	0
3	11-09-2007	CASE CLASSIFIED BY OIPE	0
2	11-08-2007	IFW Scan & PACR Auto Security Review	0
1	10-31-2007	Initial Exam Team nn	0
0.5	10-31-2007	Filing date	0

Close Window

UNITED STATES PATENT AND TRADEMARK OFFICE

Commissioner for Patents
United States Patent and Trademark Office
P.O. Box 1450
Alexandria, VA 22313-1450
www.uspto.gov

MAILED
APR 10 2012
OFFICE OF PETITIONS

FOLEY AND LARDNER LLP
SUITE 500
3000 K STREET NW
WASHINGTON DC 20007

In re Patent No. 8,110,565	:	DECISION ON REQUEST FOR
HOUZE et al.	:	RECONSIDERATION OF
Issue Date: February 7, 2012	:	PATENT TERM ADJUSTMENT
Application No. 11/979,263	:	
Filed: October 31, 2007	:	
Atty Docket No. 041457-0779	:	

This is a decision on the REQUEST FOR RECONSIDERATION OF PATENT TERM ADJUSTMENT UNDER 37 C.F.R. §1.705, filed April 4, 2012, requesting that the patent term adjustment indicated on the above-identified patent be corrected to indicate that the term of the above-identified patent is extended or adjusted by three hundred eighty-seven (387) days.

The petition to correct the patent term adjustment indicated on the above-identified patent is **DISMISSED**.

Patentee disputes the 385 days of B delay. Patentee asserts that the period of adjustment under 37 CFR 1.703(b) is 464 days.

The Office has considered patentee's argument, but does not find it persuasive. 37 CFR 1.703(b) indicates that the period of adjustment under 37 CFR 1.702(b) ("over three year period") is the number of days, if any, in the period beginning on the day after the date that is three years after the actual filing date of the application and ending on the date a patent was issued. 35 U.S.C. 154(b)(1)(B).

In this instance, the "over three year period" is 464 days, beginning on November 1, 2010, the day after the date that is three years after the filing date of the application and ending on February 7, 2012, the date the patent issued.

However, 37 CFR 1.703(b) also sets forth the limitations on patent term adjustment specified in 35 U.S.C. 154(b)(1)(B)(i) and (ii). Specifically, the period consumed by appellate review, whether successful or not, is excluded from the calculation of B delay. See 35 U.S.C. 154(b)(1)(B)(ii). An appeal to the Board of Patent Appeals and Interferences commences with the filing of a notice of appeal. See 35 U.S.C. 134(a). Generally, an appeal to the Board of Patent Appeals and Interferences ends with either 1) a Board decision, 2) the examiner reopening prosecution and issuing another Office action, or 3) the applicant filing a request to withdraw the appeal and reopen prosecution (e.g. the filing of a request for continued examination).

In this instance the period consumed by appellate review is 79 days, beginning on October 4, 2010, the date of filing of the notice of appeal and ending on December 21, 2010, the subsequent date of the mailing of the non-final Office action. Thus, B delay is 385 (464 - 79) days.

It is noted that the Office issued a Notice of proposed rulemaking entitled *Revision of Patent Term Extension and Adjustment Provisions Relating to Appellate Review and Information Disclosure Statements*, 76 FR 18990 (April 6, 2011). To the extent that the final rule on *Revision of Patent Term Extension and Adjustment Provisions Relating to Appellate Review* revises the interpretation of appellate review applied in this decision, patentees are given **one (1) month or thirty (30) days**, whichever is longer, from the date of the final rule to file a request for reconsideration. No extensions of time will be granted under § 1.136.

Nothing in this decision shall be construed as a waiver of the requirement of 35 U.S.C. 154(b)(4) that any civil action by an applicant dissatisfied with a determination made by the Director under 35 U.S.C. 154(b)(3) be filed in the United States District Court for the District of Columbia within 180 days after the grant of the patent.

The $200.00 fee set forth in 37 CFR 1.18(e) is required and will be charged to the Deposit Account as authorized.

Telephone inquiries specific to this matter should be directed to the undersigned at (571) 272-3211.

Christina Tartera Donnell

Christina Tartera Donnell
Senior Petitions Attorney
Office of Petitions

UNITED STATES PATENT AND TRADEMARK OFFICE

Commissioner for Patents
United States Patent and Trademark Office
P.O. Box 1450
Alexandria, VA 22313-1450
www.uspto.gov

BIRCH STEWART KOLASCH & BIRCH
PO BOX 747
FALLS CHURCH VA 22040-0747

MAILED

MAR 22 2011

OFFICE OF PETITIONS

In re Application of	:	
Chen et al.	:	
Application No. 11/979,339	:	DECISION ON PETITION
Filed: November 1, 2007		TO WITHDRAW FROM RECORD
Attorney Docket No. 4989-0166PUS1	:	
	:	

This is a decision on the Request to Withdraw as attorney or agent of record under 37 C.F.R. § 1.36(b), filed February 11, 2011.

The request is **APPROVED**.

A grantable request to withdraw as attorney/agent of record must be signed by every attorney/agent seeking to withdraw or contain a clear indication that one attorney is signing on behalf of another/others. The Office will require the practitioner(s) to certify that he, she or they have: (1) given reasonable notice to the client, prior to the expiration of the reply period, which the practitioner(s) intends to withdraw from employment; (2) delivered to the client or a duly authorized representative of the client all papers and property (including funds) to which the client is entitled; and (3) notified the client of any replies that may be due and the time frame within which the client must respond, pursuant to 37 CFR 10.40 (c).

The request was signed by Gerald M. Murphy, Jr. on behalf of all attorneys of record who are associated with Customer Number 02292.

All attorneys/agents associated with the Customer Number 02292 have been withdrawn. Applicants are reminded that there is no attorney of record at this time.

All future correspondence will be directed to the first named inventor at the address indicated below.

Currently, there is an outstanding Office action mailed January 26, 2011 that requires a reply.

Telephone inquiries concerning this decision should be directed to the undersigned at (571) 272-7751. All other inquires concerning either the examination or status of the application should be directed to the Technology Center.

Joan Olszewski
Petitions Examiner
Office of Petitions

cc: Jake Chen
12F., No. 19-13,Sanchong Rd.
Nangang District
Taipei City, Taiwan, R.O.C. 115

UNITED STATES PATENT AND TRADEMARK OFFICE

Commissioner for Patents
United States Patent and Trademark Office
P.O. Box 1450
Alexandria, VA 22313-1450
www.uspto.gov

Patent No. : **7853743**
Ser. No. **11/979341**
Inventor(s) : **TODOROKI, AKINARI**
Issued : **12/14/2010**
Title : **PROCESSOR AND INTERRUPT CONTROLLING METHOD**
Docket No. : **134515**

Re: Request for Certificate of Correction

Consideration has been given your request for the issuance of a certificate of correction for the above-identified patent under the provisions of Rule(s) 1.322 and/or 1.323.

Assignees' names and addresses (assignment data) printed in a patent, are based *solely* on information supplied in the appropriate space for identifying the assignment data, i.e., item 3 of the Issue Fee Transmittal Form PTOL-85B. Granting of a request under 37 CFR 3.81(b) is required to correct applicant's error providing ***incorrect or erroneous*** assignment data, *before* issuance of a Certificate of Correction, under 37 CFR 1.323 *(see Manual of Patent Examining Procedures (M.P.E.P) Chp.1400, sect. 1481).* This procedure is required *at any time after the issue fee is paid*, including after issuance of the patent.

In view of the foregoing, your request, in this matter, is hereby denied.

A request to correct the Assignee under 37 CFR 3.81(b) should include:

A. **the processing fee set forth in 37 CFR 1. 17(i) (currently $130);**
B. a statement that the failure to include the correct assignee name on the PTOL-85B was inadvertent; and
C. a copy of the Notice of Recordation of Assignment Document, reflecting the reel and frame number where the assignment(s) is recorded and/or reflecting proof of *the date* the assignment was submitted for recordation.

In the Request, Applicant(s) may request that the file be forwarded to Certificates of Correction Branch, for issuance of a Certificate of Correction, if the Request is granted.

Any request under 37 CFR 3.81(b) should be directed to the following address or facsimile number:

By mail: Mail Stop PETITIONS
Commissioner for Patents
Post Office Box 1450
Alexandria, VA 22313-1450

By hand: Customer Service Window
Mail Stop Petitions
Randolph Building
40l Dulany Street
Alexandria, VA 22314

By fax: (703) 872-9306
ATTN: Office of Petitions

If a fee (currently $100) was previously submitted for consideration of a Request for Certificate of Correction, under CFR 1.323, to correct assignment data, no additional fee is required.

A Certificate of Correction will be issued for the remaining errors.

Omega Lewis
For Mary Diggs
Decisions & Certificates
of Correction Branch
(703)756-1575 or (703) 756-1814

OLIFF & BERRIDGE, PLC
P.O. BOX 320850
ALEXANDRIA VA 22320-4850

OL

UNITED STATES PATENT AND TRADEMARK OFFICE

Commissioner for Patents
United States Patent and Trademark Office
P.O. Box 1450
Alexandria, VA 22313-1450
www.uspto.gov

MAILED
JUN 30 2011
OFFICE OF PETITIONS

OLIFF & BERRIDGE, PLC
P.O. BOX 320850
ALEXANDRIA VA 22320-4850

In re Patent No. 7,853,743	:	
Issue Date: December 14, 2010	:	
Application No. 11/979,341	:	DECISION ON PETITION
Filed: November 1, 2007	:	
Attorney Docket No. 134515	:	

This is a decision on the Request For Correction Of Patent To State The Name Of The Assignee(s) Under 37 C.F.R. §3.81(b) and Request For Certificate Of Correction Under Rule 323, filed February 25, 2011, which is being treated as a Petition Under 37 CFR §3.81(b), to identify the correct assignee's name. A completed Certificate of Correction Form (PTO/SB/44) was submitted with Petition.

The petition under 37 CFR §3.81(b) is **GRANTED**.

Petitioner requests that the present Petition was submitted to correct the assignee's name on the previously submitted PTOL 85B. Accordingly, petitioner requests, in effect, that the Title Page of the above-identified patent be corrected, via issuance of Certificate of Correction, to correct the assignee's name identified thereon from:

"Seiko Epson Corporation, Tokyo (JP)
National University Corporation, Nagoya-shi, (JP)"

to:

--Seiko Epson Corporation, Tokyo, (JP)
National University Corporation Nagoya University, Nagoya-shi, (JP)--

37 CFR 3.81(b), effective June 25, 2004, reads:

> *After payment of the issue fee:* Any request for issuance of an application in the name of the assignee submitted after the date of payment of the issue fee, and any request for a patent to be corrected to state the name of the assignee, must state that the assignment was submitted for recordation as set forth in §3.11 before issuance of the patent, and must include a request for a certificate of correction under §1.323 of this chapter (accompanied by the fee set forth in §1.20(a) and the processing fee set forth in §1.17(i) of this chapter.

The requisite $100.00 fee (Fee Code 1811), as set forth under 37 CFR §1.20(a), and the requisite $130.00 processing fee (Fee Code 1464), as set forth under 37 CFR §1.17(i), have been submitted. Further, Office assignment records are consistent with the requested correction. Accordingly, since the Petition complies with the provisions of 37 CFR §3.81(b), it is appropriate for the Office to issue a Certificate of Correction in accordance with the content of the Form (PTO/SB/44) submitted with Petition.

Inquiries related this communication should be directed to the undersigned at (571)272-3213.

Any questions concerning the issuance of a Certificate of Correction should be directed to the Certificates of Correction Branch at (703)756-1814.

This matter is being referred to the Certificates of Correction Branch for processing of a Certificate of Correction in U.S. Patent No. 7,853,743.

Cheryl Gibson-Baylor

Cheryl Gibson-Baylor
Petitions Examiner
Office of Petitions

UNITED STATES PATENT AND TRADEMARK OFFICE

Commissioner for Patents
United States Patent and Trademark Office
P.O. Box 1450
Alexandria, VA 22313-1450
www.uspto.gov

MANELLI DENISON & SELTER PLLC
2000 M STREET NW, 7TH FLOOR
WASHINGTON, DC 20036-3307

MAILED

APR 12 2011

OFFICE OF PETITIONS

In re Application of	:	
Myron D'SOUZA, *et al.*	:	
Application No. 11/979,493	:	DECISION GRANTING PETITION
Filed: November 5, 2007	:	UNDER 37 CFR 1.313(c)(2)
Attorney Docket No. **20-612**	:	

This is a decision on the petition under 37 CFR 1.313(c)(2), filed April 6, 2011, to withdraw the above-identified application from issue after payment of the issue fee.

The petition is **GRANTED**.

The above-identified application is withdrawn from issue for consideration of a submission under 37 CFR 1.114 (request for continued examination). *See* 37 CFR 1.313(c)(2).

Petitioner is advised that the issue fee paid on March 15, 2011 cannot be refunded. If, however, this application is again allowed, petitioner may request that it be applied towards the issue fee required by the new Notice of Allowance.[1]

Telephone inquiries should be directed to the undersigned at (571) 272-7253.

This application is being referred to Technology Center AU 2617 for processing of the request for continued examination under 37 CFR 1.114 and for consideration of the previously filed information disclosure statement.

/Monica A. Graves/
Petitions Examiner, Office of Petitions

[1] *The request to apply the issue fee to the new Notice may be satisfied by completing and returning the new Part B – Fee(s) Transmittal Form (along with any balance due at the time of submission). Petitioner is advised that the Issue Fee Transmittal Form* ***must*** *be completed and timely submitted to avoid abandonment of the application.*

UNITED STATES PATENT AND TRADEMARK OFFICE

Commissioner for Patents
United States Patent and Trademark Office
P.O. Box 1450
Alexandria, VA 22313-1450
www.uspto.gov

WELSH FLAXMAN & GITLER LLC
2000 DUKE STREET, SUITE 100
ALEXANDRIA VA 22314

MAILED
AUG 24 2011
OFFICE OF PETITIONS

In re Application of
Voegele et al.
Application No. 11/979,638
Filed: November 6, 2007
Attorney Docket No. END-6153

: DECISION ON PETITION
: UNDER 37 CFR 1.78(a)(3)
: AND 37 CFR 1.78(a)(6)

This is a decision on the petition under 37 CFR 1.78(a)(3) and 1.78(a)(6), filed July 13, 2011, to accept an unintentionally delayed claim under 35 U.S.C. § 120 and 119(e) for the benefit of the prior-filed applications set forth in the amendment filed concurrently with the instant petition.

The petitions are **GRANTED**.

A petition for acceptance of a claim for late priority under 37 CFR §§ 1.78(a)(3) and 1.78(a)(6) is only applicable to those applications filed on or after November 29, 2000. Further, the petition is appropriate only after the expiration of the period specified in 37 CFR §§ 1.78(a)(2)(ii) and 1.78(a)(5)(ii). In addition, the petition under 37 CFR §§ 1.78(a)(3) and 1.78(a)(6) must be accompanied by:

> (1) the reference required by 35 U.S.C. §§ 120 and 119(e) and 37 CFR §§ 1.78(a)(2)(i) and 1.78(a)(5)(i) of the prior-filed applications, unless previously submitted;
> (2) the surcharge set forth in § 1.17(t); and
> (3) a statement that the entire delay between the date the claim was due under 37 CFR §§ 1.78(a)(2)(ii) and 1.78(a)(5)(ii) and the date the claim was filed was unintentional. The Commissioner may require additional where there is a question whether the delay was unintentional.

The instant nonprovisional application was filed on August 14, 2007 and was pending at the time of filing of the instant petition. A reference to the prior-filed applications has been included in an amendment to the first sentence of the specification following the title, as required by 37 CFR §§ 1.78(a)(2)(iii) and 1.78(a)(5)(iii).

The instant nonprovisional application was filed after November 29, 2000, and the claim for priority herein is submitted after expiration of the period specified in 37 CFR §§ 1.78(a)(2)(ii) and 1.78(a)(5)(ii). *See* 35 U.S.C. § 120 and § 119(e). Accordingly, having found that the instant petition satisfies the conditions of 37 CFR §§ 1.78(a)(3) and 1.78(a)(6) for acceptance of an unintentionally delayed claim for priority under 35 U.S.C. § 120 and § 119(e), the petition to accept an unintentionally delayed claim of benefit to the prior-filed applications is granted.

The granting of the petition to accept the delayed benefit claim to the prior-filed applications under 37 CFR §§ 1.78(a)(3) and 1.78(a)(6) should not be construed as meaning that the instant application is entitled to the benefit of the filing date of the prior-filed applications. In order for the instant application to be entitled to the benefit of the prior-filed applications, all other requirements under 35 U.S.C. §120 and 1.78(a)(1) and (a)(2) and under 35 U.S.C. §119(e) and 37 CFR 1.78(a)(4) and (a)(5) must be met. Similarly, the fact that the corrected Filing Receipt accompanying this decision on petition includes the prior-filed applications should not be construed as meaning that applicant is entitled to the claim for benefit of priority to the prior-filed applications noted thereon. Accordingly, the examiner will, in due course, consider this benefit claim and determine whether the instant application is entitled to the benefit of the earlier filing date.

Additionally, 37 CFR §§ 1.78(a)(2)(ii) and 1.78(a)(5)(ii) require a statement that the entire delay between the date the claim was due under 37 CFR §§ 1.78(a)(2)(ii) and 1.78(a)(5)(ii) and the date the claim was filed was unintentional. Since the statement appearing in the petition varies from the language required 37 CFR §§ 1.78(a)(2)(ii) and 1.78(a)(5)(ii), the statement is being construed as the required statement. Petitioner must notify the Office if this is **not** a correct reading of the statement appearing in the petition.

A corrected Filing Receipt, which includes the priority claim to the prior-filed applications, accompanies this decision on petition.

Any questions concerning this matter may be directed to Joan Olszewski at (571) 272-3206.

This matter is being referred to Technology Center Art Unit 3775 for appropriate action on the amendment submitted July 13, 2011, including consideration by the examiner of the claim under 35 U.S.C. § 120 and 37 CFR 1.78(a)(2) for the benefit of the prior-filed nonprovisional application, and for consideration of the claim under 35 U.S.C. §119(e) and 37 CFR 1.78(a)(5) for the benefit of the prior-filed provisional application.

/Liana Walsh/
Liana Walsh
Petitions Examiner
Office of Petitions

ATTACHMENT: Corrected Filing Receipt

UNITED STATES PATENT AND TRADEMARK OFFICE

UNITED STATES DEPARTMENT OF COMMERCE
United States Patent and Trademark Office
Address: COMMISSIONER FOR PATENTS
P.O. Box 1450
Alexandria, Virginia 22313-1450
www.uspto.gov

APPLICATION NUMBER	FILING or 371(c) DATE	GRP ART UNIT	FIL FEE REC'D	ATTY.DOCKET.NO	TOT CLAIMS	IND CLAIMS
11/979,638	11/06/2007	3775	1160	END-6153	18	1

CONFIRMATION NO. 2618

CORRECTED FILING RECEIPT

21884
WELSH FLAXMAN & GITLER LLC
2000 DUKE STREET, SUITE 100
ALEXANDRIA, VA 22314

OC000000049452001

Date Mailed: 08/22/2011

Receipt is acknowledged of this non-provisional patent application. The application will be taken up for examination in due course. Applicant will be notified as to the results of the examination. Any correspondence concerning the application must include the following identification information: the U.S. APPLICATION NUMBER, FILING DATE, NAME OF APPLICANT, and TITLE OF INVENTION. Fees transmitted by check or draft are subject to collection. Please verify the accuracy of the data presented on this receipt. **If an error is noted on this Filing Receipt, please submit a written request for a Filing Receipt Correction. Please provide a copy of this Filing Receipt with the changes noted thereon. If you received a "Notice to File Missing Parts" for this application, please submit any corrections to this Filing Receipt with your reply to the Notice. When the USPTO processes the reply to the Notice, the USPTO will generate another Filing Receipt incorporating the requested corrections**

Applicant(s)

James W. Voegele, Cincinnati, OH;
Christopher J. Hess, Cincinnati, OH;
William B. Weisenburgh II, Maineville, OH;
Robert P. Gill, Mason, OH;
Daniel W. Drew, Loveland, OH;
Frank L. Lyman, Point Pleasant, NJ;
Michael D. Cronin, Cincinnati, OH;

Power of Attorney:

Philip Johnson--27200
Joseph Shirtz--31880
John Welsh--33621
Gerry Gressel--34342
Howard Flaxman--34595
Verne Kreger Jr--35231
Dean Garner--35877
Victor Moreno--40732

Domestic Priority data as claimed by applicant

This application is a CIP of 11/399,045 04/05/2006 ABN
which claims benefit of 60/669,514 04/08/2005
and claims benefit of 60/700,176 07/18/2005

Foreign Applications (You may be eligible to benefit from the **Patent Prosecution Highway** program at the USPTO. Please see http://www.uspto.gov for more information.)

If Required, Foreign Filing License Granted: 12/01/2007

The country code and number of your priority application, to be used for filing abroad under the Paris Convention, is **US 11/979,638**

Projected Publication Date: Not Applicable

Non-Publication Request: No

Early Publication Request: No
Title

Manifold for laparoscopic seal assembly

Preliminary Class

606

PROTECTING YOUR INVENTION OUTSIDE THE UNITED STATES

Since the rights granted by a U.S. patent extend only throughout the territory of the United States and have no effect in a foreign country, an inventor who wishes patent protection in another country must apply for a patent in a specific country or in regional patent offices. Applicants may wish to consider the filing of an international application under the Patent Cooperation Treaty (PCT). An international (PCT) application generally has the same effect as a regular national patent application in each PCT-member country. The PCT process **simplifies** the filing of patent applications on the same invention in member countries, but **does not result** in a grant of "an international patent" and does not eliminate the need of applicants to file additional documents and fees in countries where patent protection is desired.

Almost every country has its own patent law, and a person desiring a patent in a particular country must make an application for patent in that country in accordance with its particular laws. Since the laws of many countries differ in various respects from the patent law of the United States, applicants are advised to seek guidance from specific foreign countries to ensure that patent rights are not lost prematurely.

Applicants also are advised that in the case of inventions made in the United States, the Director of the USPTO must issue a license before applicants can apply for a patent in a foreign country. The filing of a U.S. patent application serves as a request for a foreign filing license. The application's filing receipt contains further information and guidance as to the status of applicant's license for foreign filing.

Applicants may wish to consult the USPTO booklet, "General Information Concerning Patents" (specifically, the section entitled "Treaties and Foreign Patents") for more information on timeframes and deadlines for filing foreign patent applications. The guide is available either by contacting the USPTO Contact Center at 800-786-9199, or it can be viewed on the USPTO website at http://www.uspto.gov/web/offices/pac/doc/general/index.html.

For information on preventing theft of your intellectual property (patents, trademarks and copyrights), you may wish to consult the U.S. Government website, http://www.stopfakes.gov. Part of a Department of Commerce initiative, this website includes self-help "toolkits" giving innovators guidance on how to protect intellectual property in specific countries such as China, Korea and Mexico. For questions regarding patent enforcement issues, applicants may call the U.S. Government hotline at 1-866-999-HALT (1-866-999-4158).

LICENSE FOR FOREIGN FILING UNDER

Title 35, United States Code, Section 184

Title 37, Code of Federal Regulations, 5.11 & 5.15

GRANTED

The applicant has been granted a license under 35 U.S.C. 184, if the phrase "IF REQUIRED, FOREIGN FILING LICENSE GRANTED" followed by a date appears on this form. Such licenses are issued in all applications where the conditions for issuance of a license have been met, regardless of whether or not a license may be required as set forth in 37 CFR 5.15. The scope and limitations of this license are set forth in 37 CFR 5.15(a) unless an earlier license has been issued under 37 CFR 5.15(b). The license is subject to revocation upon written notification. The date indicated is the effective date of the license, unless an earlier license of similar scope has been granted under 37 CFR 5.13 or 5.14.

This license is to be retained by the licensee and may be used at any time on or after the effective date thereof unless it is revoked. This license is automatically transferred to any related applications(s) filed under 37 CFR 1.53(d). This license is not retroactive.

The grant of a license does not in any way lessen the responsibility of a licensee for the security of the subject matter as imposed by any Government contract or the provisions of existing laws relating to espionage and the national security or the export of technical data. Licensees should apprise themselves of current regulations especially with respect to certain countries, of other agencies, particularly the Office of Defense Trade Controls, Department of State (with respect to Arms, Munitions and Implements of War (22 CFR 121-128)); the Bureau of Industry and Security, Department of Commerce (15 CFR parts 730-774); the Office of Foreign AssetsControl, Department of Treasury (31 CFR Parts 500+) and the Department of Energy.

NOT GRANTED

No license under 35 U.S.C. 184 has been granted at this time, if the phrase "IF REQUIRED, FOREIGN FILING LICENSE GRANTED" DOES NOT appear on this form. Applicant may still petition for a license under 37 CFR 5.12, if a license is desired before the expiration of 6 months from the filing date of the application. If 6 months has lapsed from the filing date of this application and the licensee has not received any indication of a secrecy order under 35 U.S.C. 181, the licensee may foreign file the application pursuant to 37 CFR 5.15(b).

UNITED STATES PATENT AND TRADEMARK OFFICE

Commissioner for Patents
United States Patent and Trademark Office
P.O. Box 1450
Alexandria, VA 22313-1450
www.uspto.gov

YOSI MAMO
PO Box 29746
TEL AVIV 61297
ISRAEL

MAILED
AUG 23 2010
OFFICE OF PETITIONS

In re Application of :
Mamo :
Application No. 11/979,654 : DECISION ON PETITION
Filed: 11/07/2007 :
Title: MEANS AND METHODS FOR :
LIFTING FRINGED GARMENTS

This is a decision on the petition under 37 CFR 1.137(b) filed March 10, 2010, to revive the above-identified application.

The petition is **GRANTED**.

The application became abandoned for failure to reply in a timely manner to the Restriction Requirement mailed August 5, 2009, which set a shortened statutory period for reply of one (1) month or thirty (30) days (whichever is later). No extensions of time under the provisions of 37 CFR 1.136(a) were obtained. Accordingly, the application became abandoned on September 6, 2009. A Notice of Abandonment was mailed on February 23, 2010.

The petition satisfies the requirements of 37 CFR 1.137(b) in that petitioner has supplied (1) the required reply; (2) the petition fee; and (3) a proper statement of unintentional delay.

This matter is being forwarded to Technology Center AU 3675.

Telephone inquiries concerning this matter may be directed to the undersigned at (571) 272-3211.

C. T. Donnell

Christina Tartera Donnell
Senior Petitions Attorney
Office of Petitions

UNITED STATES PATENT AND TRADEMARK OFFICE

Commissioner for Patents
United States Patent and Trademark Office
P.O. Box 1450
Alexandria, VA 22313-1450
www.uspto.gov

BREINER & BREINER, L.L.C.
115 NORTH HENRY STREET
ALEXANDRIA VA 22314

MAILED

JAN 30 2012

OFFICE OF PETITIONS

In re Application of Galvan-Nanez, Julia Application No. 11/979,683 Filed: November 7, 2007 Attorney Docket No. 7037	: : : : :	DECISION ON PETITION TO WITHDRAW FROM RECORD

This is a decision on the Request to Withdraw as attorney or agent of record under 37 C.F.R. § 1.36(b), filed January 6, 2012.

The request is **APPROVED**.

The request was signed by Jennifer A. Harchick on behalf of herself, as she is now an employee of the U.S. Patent and Trademark Office.

All other attorneys/agents of record remain and the correspondence address of record remains unchanged.

Telephone inquires concerning this decision should be directed to the undersigned at (571) 272-3206. All other inquires concerning either the examination or status of the application should be directed to the Technology Center.

/Liana Walsh/
Liana Walsh
Petitions Examiner
Office of Petitions

UNITED STATES PATENT AND TRADEMARK OFFICE

Commissioner for Patents
United States Patent and Trademark Office
P.O. Box 1450
Alexandria, VA 22313-1450
www.uspto.gov

ZILKA-KOTAB, PC
P.O. BOX 721120
SAN JOSE, CA 95172-1120

MAILED

MAR 14 2011

OFFICE OF PETITIONS

In re Application of	:	
WERNER, Eran et al.	:	
Application No. 11/979,684	:	DECISION ON PETITION
Filed: November 07, 2007	:	TO WITHDRAW
Attorney Docket No. **NAI1P675/07.114.01**	:	FROM RECORD
	:	

This is a decision on the Request to Withdraw as attorney or agent of record under 37 C.F.R. § 1.36(b), filed February 25, 2011.

The request is as moot because a revocation of power of attorney has been previously filed.

A review of the file record indicates that the power of attorney to ZILKA-KOTAB, PC has been revoked by the assignee of the patent application on February 24, 20011. Accordingly, the request to withdraw under 37 C.F.R. § 1.36(b) is moot.

All future communications from the Office will continue to be directed to the below-listed address until otherwise notified by applicant.

Telephone inquires concerning this decision should be directed to Tredelle Jackson at 571-272-2783.

/Tredelle D. Jackson/
Paralegal Specialist
Office of Petitions

cc: **PATENT CAPITAL GROUP**
6119 MCCOMMAS BLVD
DALLAS TX 75214

UNITED STATES PATENT AND TRADEMARK OFFICE

Commissioner for Patents
United States Patent and Trademark Office
P.O. Box 1450
Alexandria, VA 22313-1450
www.uspto.gov

MAILED
FEB 14 2012
OFFICE OF PETITIONS

BIRCH STEWART KOLASCH & BIRCH
PO BOX 747
FALLS CHURCH VA 22040-0747

In re Patent No. 8,003,027	:	
Issue Date: August 23, 2011	:	
Application No. 11/979,951	:	DECISION ON PETITION
Filed: November 9, 2007	:	
Attorney Docket No. 0315-0175PUS1	:	

This is a decision on the Petition Under 37 C.F.R. §1.183 To Correct Assignee Identification, filed December 14, 2011, to identify the correct assignee's name. A completed Certificate of Correction Form (PTO/SB/44) was submitted with Petition.

The petition under 37 CFR §3.81(b) is **GRANTED**.

Petitioner urges that the present Petition was submitted to identify the correct assignee's name on the previously submitted PTOL 85B and such error was inadvertent. Accordingly, petitioner requests that a Certificate of Correction (PTO/SB/44) be issued to identify the correct assignee's name to the Title Page of the Letters Patent.

37 CFR 3.81(b), effective June 25, 2004, reads:

> *After payment of the issue fee:* Any request for issuance of an application in the name of the assignee submitted after the date of payment of the issue fee, and any request for a patent to be corrected to state the name of the assignee, must state that the assignment was submitted for recordation as set forth in §3.11 before issuance of the patent, and must include a request for a certificate of correction under §1.323 of this chapter (accompanied by the fee set forth in §1.20(a) and the processing fee set forth in §1.17(i) of this chapter.

The requisite $100.00 fee (Fee Code 1811), as set forth under 37 CFR §1.20(a), was submitted. However, the requisite $130.00 processing fee (Fee Code 1464), as set forth under 37 CFR 1.17(i), is required. Therefore, since a $400.00 petition fee was charged and unnecessary, the required $130.00 fee will be charged and the remaining $270.00 will be credited to petitioner's deposit account.

Further, Office assignment records are consistent with the requested correction. Accordingly, since the Petition complies with the provisions of 37 CFR §3.81(b), it is appropriate for the Office to issue a Certificate of Correction in accordance with the content of the Form (PTO/SB/44) submitted with Petition.

Inquiries related this communication should be directed to the undersigned at (571)272-3213.

Any questions concerning the issuance of a Certificate of Correction should be directed to the Certificates of Correction Branch at (703)756-1814.

This matter is being referred to the Certificates of Correction Branch for processing of a Certificate of Correction in U.S. Patent No. 8,003,027.

Cheryl Gibson-Baylor
Petitions Examiner
Office of Petitions

UNITED STATES PATENT AND TRADEMARK OFFICE

UNITED STATES DEPARTMENT OF COMMERCE
United States Patent and Trademark Office
Address: COMMISSIONER FOR PATENTS
P.O. Box 1450
Alexandria, Virginia 22313-1450
www.uspto.gov

APPLICATION NO.	FILING DATE	FIRST NAMED INVENTOR	ATTORNEY DOCKET NO.	CONFIRMATION NO.
11/980,019	10/30/2007	Ronald L. Barnes	BARNESCIP12CON	7301

20115 7590 09/22/2010
PATENT SERVICES
915 Merchant Walk
Suite D
HUNTSVILLE, AL 35801

EXAMINER
JOYNER, KEVIN

ART UNIT	PAPER NUMBER
1797	

MAIL DATE	DELIVERY MODE
09/22/2010	PAPER

Please find below and/or attached an Office communication concerning this application or proceeding.

The time period for reply, if any, is set in the attached communication.

UNITED STATES PATENT AND TRADEMARK OFFICE

Commissioner for Patents
United States Patent and Trademark Office
P.O. Box 1450
Alexandria, VA 22313-1450
www.uspto.gov

SEP 22 2010

wk

Mailed :

In re Application of	:	DECISION ON
Barnes	:	PETITION
Serial No. 11/980,019	:	
Filed: October 30, 2007	:	
For: GERMICIDAL GENERATOR OF OZONE AND OZONITES		

This is a decision on the PETITION FILED UNDER 37 CFR 1.144 filed on July 19, 2010.

The Examiner initially required a restriction on March 24, 2010 between Group I, claims 1-10 and 19, drawn to a system for purifying air, classified in class 422, subclass 186.04 and Group II, claims 11-18 and 20 drawn to a method of purifying air of a space, classified in class 422, subclass 4. Applicant elected Group II claims 11-18 and 20 with traverse.

The Examiner determined that the Inventions of Group I and Group II are related as process and apparatus for its practice. Process and apparatus for its practice can be shown to be distinct inventions, if either or both of the following can be shown: (A) that the process *as claimed* can be practiced by another materially different apparatus or by hand; or (B) that the apparatus *as claimed* can be used to practice another materially different process. The burden is on the Examiner to provide reasonable examples that recite material differences.

If Applicant proves or provides convincing argument that there is no material difference or that a process cannot be performed by hand (if examiner so argued), the burden is on the Examiner to document another materially different process or apparatus or withdraw the requirement.

Applicant asserts that the Examiner has not provided a reasonable example(s) and the Examiner has not shown there would be a serious burden

The Examiner stated that the apparatus as claimed can be used to practice another and materially different process. The apparatus can be used in a method of detecting counterfeit money, credit cards and/or passports or in the ultraviolet radiation generators are utilized to detect a UV watermark. Furthermore, the apparatus can be utilized in a method for sterilizing a medical instrument and/or a pharmaceutical composition in a clean room.

Applicant asserts that the first ultraviolet radiation generator and second radiation generator are enclosed in a housing and this it would be unreasonable for the openings to be located so as to permit escape of dangerous ultraviolet radiation. Applicants further submit that the limitations of claim 1 can only be used for what they recite and not for what they don't recite. The Examiner is referring to a different apparatus than what is claimed. The Examiner has added the limitations of openable and closeable doors to Applicant's openings.

Pending claims must be "given their broadest reasonable interpretation consistent with the specification." Applicant's claims use the transitional term "comprising". Transitional phrases define the scope of a claim with respect to what unrecited additional components or steps, if any, are excluded from the scope of the claim. The transitional term "comprising", which is synonymous with "including," "containing," or "characterized by," is inclusive or open-ended and does not exclude additional, unrecited elements or method steps. The example set forth by the Examiner is not unreasonable in view of the claim language.

For purposes of the initial requirement, a serious burden on the Examiner may be *prima facie* shown by appropriate explanation of separate classification, or separate status in the art, or a different field of search as defined in MPEP § 808.02. That *prima facie* showing may be rebutted by appropriate showings or evidence by the Applicant. The Examiner has stated that the prior art applicable to one set of inventions may not be applicable to a second set of inventions, wherein there are numerous examples of systems that purify water that may meet the limitations of the apparatus but would not meet the limitations of the method. Applicant has not rebutted by appropriate showings or evidence.

DECISION

The petition is **DENIED.**

/W. GARY JONES/
Gary W. Jones, Director
Technology Center 1700
Chemical and Materials Engineering

Steven M. Clodfelter
PATENT SERVICES
915 Merchant Walk
Suite D
HUNTSVILLE AL 35801

UNITED STATES PATENT AND TRADEMARK OFFICE

Commissioner for Patents
United States Patent and Trademark Office
P.O. Box 1450
Alexandria, VA 22313-1450
www.uspto.gov

LADAS & PARRY
26 WEST 61 STREET
NEW YORK NY 10023

MAILED
DEC 10 2010
OFFICE OF PETITIONS

In re Application of
Chung-Jen WU
Application No. 11/980,103
Filed: October 30, 2007
Docket No. U 01067-7

DECISION ON PETITION

This is a decision on the petition under the unintentional provisions of 37 CFR 1.137(b), filed November 24, 2010, to revive the above-identified application.

The petition is **GRANTED**.

The application became abandoned for failure to reply in a timely manner to the non-final Office action mailed, March 18, 2010, which set a shortened statutory period for reply of three (3) months. No extensions of time under the provisions of 37 CFR 1.136(a) were obtained. Accordingly, the application became abandoned on June 19, 2010.

The petition satisfies the requirements of 37 CFR 1.137(b) in that petitioner has supplied (1) the reply in the form of an amendment, (2) the petition fee of $1620; and (3) a proper statement of unintentional delay.

Telephone inquiries concerning this decision should be directed to the undersigned at (571) 272-6735.

This application is being referred to Technology Center AU 1765 for appropriate action by the Examiner in the normal course of business.

/Diane C. Goodwyn/
Diane C. Goodwyn
Petitions Examiner
Office of Petitions

UNITED STATES PATENT AND TRADEMARK OFFICE

Commissioner for Patents
United States Patent and Trademark Office
P.O. Box 1450
Alexandria, VA 22313-1450
www.uspto.gov

FISH & RICHARDSON P.C. (BO)
P.O. BOX 1022
MINNEAPOLIS MN 55440-1022

MAILED
NOV 23 2011
OFFICE OF PETITIONS

In re Patent of Maeda et al.	:
Patent No. 8,017,731	: DECISION ON REQUEST FOR
Issue Date: September 13, 2011	: RECONSIDERATION OF
Application No. 11/980,117	: PATENT TERM ADJUSTMENT
Filed: October 30, 2007	:
Attorney Docket No. 26570-0096002	:

This is a decision on the petition filed on November 10, 2011, which is being treated as a petition under 37 CFR 1.705(d) requesting that the patent term adjustment indicated on the above-identified patent be corrected to indicate that the term of the above-identified patent is extended or adjusted by eight hundred seventy-three (873) days.

The petition to correct the patent term adjustment indicated on the above-identified patent is **DISMISSED**.

BACKGROUND

On September 13, 2011, the above-identified application matured into U.S. Patent No. 8,017,731, with a revised patent term adjustment of 742 days. On November 10, 2011, patentees timely submitted this request for reconsideration of patent term adjustment (with required fee), asserting that the correct number of days of Patent Term Adjustment is 873. Patentees assert that the Office incorrectly calculated Office delay pursuant to 37 CFR 1.702(b). Patentees contend that the Office erred in subtracting from the "B delay" a period of time that was not "consumed by continued examination of the application." Specifically, Patentees argue that (after the filing of the request for continued examination) the Office mailed a Notice of Allowance on May 6, 2011, thereby closing examination of the application on that date. Thus, Patentees argue no continued examination took place during the 131 day period from May 6,

2011 (the mailing date of the Notice of Allowance) until September 13, 2011 (the date the patent was issued). As such, Patentees maintain that the "B delay" should include the 131 days and be increased from 81 to 212 days. Patentees conclude that the correct patent term adjustment is 873 days (the sum of 706 days of "A delay" and 212 days of "B delay" minus 37 overlapping days minus 8 days of Applicant delay).

RELEVANT STATUTE AND REGULATIONS

The statutory basis for calculation of "B delay" is 35 U.S.C. 154(b)(1)(B) GUARANTEE OF NO MORE THAN 3-YEAR APPLICATION PENDENCY, which provides that:

Subject to the limitations under paragraph (2), if the issue of an original patent is delayed due to the failure of the United States Patent and Trademark Office to issue a patent within 3 years after the actual filing date of the application in the United States, not including –

(i) any time consumed by continued examination of the application requested by the applicant under section 132(b);
(ii) any time consumed by a proceeding under section 135(a), any time consumed by the imposition of an order under section 181, or any time consumed by appellate review by the Board of Patent Appeals and Interferences or by a Federal court; or
(iii) any delay in the processing of the application by the United States Patent and Trademark Office requested by the applicant except as permitted by paragraph (3)(C), the term of the patent shall be extended 1 day for each day after the end of that 3-year period until the patent is issued.

The implementing regulation, 37 CFR 1.702(b) provides that:

Subject to the provisions of 35 U.S.C. 154(b) and this subpart, the term of an original patent shall be adjusted if the issuance of the patent was delayed due to the failure of the Office to issue a patent within three years after the date on which the application was filed under 35 U.S.C. 111(a) or the national stage commenced under 35 U.S.C. 371(b) or (f) in an international application, but not including:
(1) Any time consumed by continued examination of the application under 35 U.S.C. 132(b);
(2) Any time consumed by an interference proceeding under 35 U.S.C. 135(a);

(3) Any time consumed by the imposition of a secrecy order under 35 U.S.C. 181;

(4) Any time consumed by review by the Board of Patent Appeals and Interferences or a Federal court; or

(5) Any delay in the processing of the application by the Office that was requested by the applicant.

OPINION

Patentees' arguments have been considered, but not found persuasive. The Office calculated the period of "B delay" pursuant to 35 U.S.C. 154(b)(1)(B)(i) and 37 CFR 1.702(b)(1) as 0 days based on the application having been filed under 35 U.S.C. 111(a) on October 30, 2007 and the patent not having issued as of the day after the three year date, October 31, 2010, and a request for continued examination under 132(b) having been filed on January 20, 2011. In other words, the 131 day period beginning on the date of mailing of the notice of allowance to the date of issuance of the patent was considered time consumed by continued examination of an application under 35 U.S.C. 132(b) and was not included in the "B delay."

The Office's calculation of "B delay" is correct. The "B delay" is an adjustment entered if the issuance of the patent was delayed due to the failure of the Office to issue a patent within three years after the date on which the application was filed. However, the adjustment does not include, among other things, any time consumed by continued examination of the application at the request of the applicant under 35 U.S.C. 132(b)[1]. So, with respect to calculating the "B delay" where applicant has filed a request for continued examination, the period of adjustment is the number of days, if any, in the period beginning on the day after the date that is three years after the date on which the application was filed under 35

---

[1] Pursuant to 35 U.S.C. 132(b) , 37 CFR 1.114 provides for continued examination of an application, as follows:

(a) If prosecution in an application is closed, an applicant may request continued examination of the application by filing a submission and the fee set forth in § 1.17(e) prior to the earliest of:

(1) Payment of the issue fee, unless a petition under § 1.313 is granted;

(2) Abandonment of the application; or

(3) The filing of a notice of appeal to the U.S. Court of Appeals for the Federal Circuit under 35 U.S.C. 141, or the commencement of a civil action under 35 U.S.C. 145 or 146, unless the appeal or civil action is terminated.

(b) Prosecution in an application is closed as used in this section means that the application is under appeal, or that the last Office action is a final action (§ 1.113), a notice of allowance (§ 1.311), or an action that otherwise closes prosecution in the application.

U.S.C. 111(a) or the national stage commenced under 35 U.S.C. 371(b) or (f) in an international application and ending on the date a patent was issued, but not including the number of days in the period beginning on the date on which a request for continued examination of the application under 35 U.S.C. 132(b) was filed and ending on the date the patent was issued.

Further, counting the period of time excluded from the "B delay" for the filing of a request for continued examination under 35 U.S.C. 132(b), from the date on which the request for continued examination is filed to the date the patent is issued is proper. Patentees do not dispute that time consumed by continued examination of an application under 35 U.S.C. 132(b) is properly excluded and that the calculation of the excluded period begins on the date of filing of the request for continued examination. At issue is what further processing or examination beyond the date of filing of the request for continued examination is not any time consumed by continued examination of the application under 35 U.S.C. 132(b). The USPTO indicated in September of 2000 in the final rule to implement the patent term adjustment provisions of the AIPA that once a request for continued examination under 35 U.S.C. 132(b) and 37 CFR 1.114 is filed in an application, any further processing or examination of the application, including granting of a patent, is by virtue of the continued examination given to the application under 35 U.S.C. 132(b) and CFR 1.114. See Changes to Implement Patent Term Adjustment under Twenty-Year Patent Term, 65 Fed. Reg. 56366, 56376 (Sept. 18, 2000) (response to comment 8). Thus, the excluded period begins with the filing of the request for continued examination and ends with the issuance of the patent.

Patentees' argument that the period of time after the issuance of a notice of allowance on a request for continued examination is not "any time consumed by continued examination requested by the applicant under section 132(b)" within the meaning of 35 U.S.C. 154(b)(1)(B)(i) is not availing. This limitation is not supported by the statutory language. Garcia v. United States, 469 U.S. 70, 75 (1984) ("only the most extraordinary showing of contrary intentions from [legislative history] would justify a limitation on the 'plain meaning' of the statutory language"). BP Am. Prod. Co. v. Burton, 549 U.S. 84, 91 (2006) ("Unless otherwise defined, statutory terms are generally interpreted in accordance with their ordinary meaning"). The statute provides for a guarantee of no more than 3-year application pendency, by providing for an adjustment in the patent term:

First, "Subject to the limitations of paragraph (2)," means that the limitations of paragraph 2 apply to this paragraph's adjustment of patent term. That is, the day-to-day extension of patent term for pendency beyond the 3 year period is restricted as follows: 1) "B delay" cannot accrue for days of "A delay" that overlap, 2) the patent term cannot be extended beyond disclaimed term, and 3) the period of adjustment, including accrued "B delay," will be reduced for applicant delay.

Second, "if the issue of an original patent is delayed due to the failure of the United States Patent and Trademark Office to issue a patent within 3 years after the actual filing date of the application in the United States," meaning that the condition must first occur that the issuance of an original patent (35 U.S.C. 153), not merely the issuance of a notice of allowance, is delayed due to the Office's failure to issue a patent (sign and record a patent grant in the name of the United States), not merely mail a notice of allowance, within 3 years after the actual filing date of the application in the United States. This provision gives the Office a three-year period to issue a patent (sign and record a patent grant in the name of the United States) after the application filing date before an adjustment will accrue for "B delay."

Third, "not including- (i) any time consumed by continued examination of the application requested by the applicant under section 132(b); (ii) any time consumed by a proceeding under section 135(a), any time consumed by the imposition of an order under section 181, or any time consumed by appellate review by the Board of Patent Appeals and Interferences or by a Federal court; or (iii) any delay in the processing of the application by the United States Patent and Trademark Office requested by the applicant except as permitted by paragraph (3)(C), meaning that the three-year period does not include "any time consumed by" or "any delay in processing," as specified in clauses (i)-(iii). This language correlates to 35 U.S.C. 154(b)(1)(A) which likewise provides the basis for determining the period given the Office to take the specified actions before an adjustment will accrue for "A delay" (e.g., extended for 1 day after the day after the period specified in clauses (i)-(iv)).

Furthermore, these clauses are interpreted using their ordinary meanings. Nonetheless, the context of the legislation should be considered. As stated in Wyeth v. Dudas, 580 F.Supp.2d 138 (D.D.C., September 30, 2008), because the clock for calculating the 20-year patent term begins to run on the filing date, and not on the day the patent is actually granted, some of the

effective term of a patent is consumed by the time it takes to prosecute the application. To mitigate this effect, the statute, *inter alia*, grants adjustments of patent term whenever the patent prosecution takes more than three years, regardless of the reason. The time consumed by prosecution of the application includes every day the application is pending before the Office from the actual filing date of the application in the United States until the date of issuance of the patent. The time it takes to prosecute the application ends not with the mailing of the notice of allowance, but with the issuance of the patent.

Thus, not including "any time consumed by" means not including any days used to prosecute the application as specified in clauses (i)-(ii)[2]. Clause (i) specifies "any time consumed by continued examination of the application requested by the applicant under section 132(b)." Clause (ii) specifies "any time consumed by a proceeding under section 135(a), any time consumed by the imposition of an order under section 181, or any time consumed by appellate review by the Board of Patent Appeals and Interferences or by a Federal court." "Time" in the context of this legislation throughout refers to days. "Consumed by" means used by or used in the course of. *Websters Collegiate Dictionary*, (11th ed.). The "any" signifies that the days consumed by are "any" of the days in the pendency of the application, and not just days that occur after the application has been pending for 3 years. As such, "any time consumed by" refers to any days used in the course of 1) continued examination of the application under section 132(b)(the filing of a request for continued examination), 2) interference proceedings, 3) secrecy orders, and 4) appellate review. Thus, that 3-year period given to the Office to issue a patent before an adjustment will accrue for "B delay" does not include any days used in the course of or any time consumed by clauses (i)-(ii), including any time consumed by the filing of a request for continued examination.

---

[2] Clause (iii) provides for not including (iii) any delay in the processing of the application by the United States Patent and Trademark Office requested by the applicant except as permitted by paragraph (3)(C), the term of the patent shall be extended 1 day for each day after the end of that 3-year period until the patent is issued. It is noted that paragraph (3)(C) allows with an adequate showing by applicant for reinstatement of no more than 3 months of the patent term reduced for applicant delay in taking in excess of three months to respond.

Fourth, "the term of the patent shall be extended 1 day for each day after the end of that 3-year period until the patent is issued" meaning that the consequence of this failure is that after "the end of that 3-year period" an additional 1 day of patent term will accrue for each day that the application is pending until the day the patent is issued.

The "time consumed by" or used in the course of the continued examination of the application requested by the applicant under section 132(b) does not end until issuance of the patent. 35 U.S.C. 132(b) was enacted under the same title, the "American Inventors Protection Act of 1999," as 35 U.S.C. 154(b). Section 4403 of the AIPA amended 35 U.S.C. § 132 to provide, at the request of the applicant, for continued examination of an application for a fee (request for continued examination or RCE practice), without requiring the applicant to file a continuing application under 37 CFR 1.53(b) or a continued prosecution application (CPA) under 37 CFR 1.53(d). Thus, clause (i) is different from clause (ii) in that clause (i) refers to an examination process whereas clause (ii) refers to time consumed by proceedings (interferences, secrecy orders and appeals) in an application.

By nature, the time used in the course of the examination process continues to issuance of the patent. The examination process involves examining the application to ascertain whether it appears that the applicant is entitled to a patent under the law. See 35 U.S.C. 131 ("[t]he Director shall cause an examination to be made of the application and the alleged new invention; and if on such examination it appears that the applicant is entitled to a patent under the law, the Director shall issue a patent therefor"). If on examination it appears that the applicant is entitled to a patent, the USPTO issues a notice of allowance. See 35 U.S.C. 151 ("[i]f it appears that applicant is entitled to a patent under the law, a written notice of allowance of the application shall be given or mailed to the applicant"). If on examination it appears that the applicant is not entitled to a patent, the USPTO issues a notice (an Office action) stating the applicable rejection, objection, or other requirement, with the reasons therefor. See 35 U.S.C. 132 ("[w]henever, on examination, any claim for a patent is rejected, or any objection or requirement made, the Director shall notify the applicant thereof, stating the reasons for such rejection, or objection or requirement, together with such information and references as may be useful in judging of the propriety of continuing the prosecution of his application"). Neither the issuance of a notice of allowance nor the insurance

of an Office action terminates the examination process. If after the issuance of an Office action under 35 U.S.C. 132 it subsequently appears that the applicant is entitled to a patent (e.g., in response to an argument or amendment by the applicant), the USPTO will issue a notice of allowance. Conversely, if after the issuance of a notice of allowance under 35 U.S.C. 151 it subsequently appears that the applicant is not entitled to a patent (e.g., in response to information provided by the applicant or uncovered by the USPTO), the USPTO will withdraw the application from issuance and issue an Office action under 35 U.S.C. 132 stating the applicable rejection, objection, or other requirement, with the reasons therefor.

As held in Blacklight Power, the USPTO's responsibility to issue a patent containing only patentable claims does not end with the issuance of a notice of allowance under 35 U.S.C. 151. See BlackLight Power, Inc. v. Rogan, 295 F.3d 1269, 1273 (Fed. Cir. 2002). Rather, if there is any substantial, reasonable ground within the knowledge or cognizance of the Director as to why an application should not issue, it is the USPTO's duty to refuse to issue the patent even if a notice of allowance has previously been issued for the application. See In re Drawbaugh, 9 App. D.C. 219, 240 (D.C. Cir 1896).

Moreover, the applicant continues to be engaged in the examination process after the mailing of the notice of allowance. 37 CFR 1.56 makes clear that the applicant has a duty to disclose information material to patentability as long as the application is pending before the USPTO (i.e., until a patent is granted or the application is abandoned). See 37 CFR 1.56(a) ("[t]he duty to disclose information exists with respect to each pending claim until the claim is cancelled or withdrawn from consideration, or the application becomes abandoned"). 37 CFR 1.97 and 1.98 provide for the consideration of information submitted by the applicant after a notice of allowance has been mailed. See 37 CFR 1.97(d). In addition, 37 CFR 1.312 provides for the amendment of an application after a notice of allowance has been mailed. In fact, the request for examination procedures[3] permit the filing of a request for continued examination under 37 CFR 1.114 even after the issuance of a notice of allowance under 35 U.S.C. 151. See 37 CFR 1.114(a)(1).

As the examination process does not terminate with the mailing of the notice of allowance, the time consumed by continued

[3] Thus, on occasion, even where a request for continued examination has already been filed and a notice of allowance issued pursuant to that request, applicant may file a further request for continued examination.

examination requested by the applicant under section 132(b) does not terminate with the mailing of the notice of allowance. All the time the application is pending from the date of filing of the request for continued examination to the mailing of the notice of allowance through issuance of the patent is a consequence of the filing of the request for continued examination. Further action by the Office is pursuant to that request. Applicant has gotten further prosecution of the application without having to file a continuing application under 37 CFR 1.53(b).

All of the continued examination pursuant to the filing of the request by the applicant is properly excluded from the delay attributed to the Office. 35 U.S.C. 154(b)(1)(B)'s guarantee of a total application pendency of no more than three years provides for adjustment of the patent term for delay due to the Office's failure to issue the patent within three years, but does not include "any time consumed by continued examination requested by the applicant under 35 U.S.C. 132(b)." It is not necessary to mitigate the effect on the 20-year term to the extent that applicant has requested that the Office continue to examine the application via a request for continued examination, in lieu of, the filing of a continuing application under 37 CFR 1.53(b).

In this instance, a request for continued examination was filed on January 20, 2011, and the patent issued by virtue of that request on September 13, 2011. Pursuant to 35 U.S.C. 154(b)(1)(B)(i), the period beginning on May 6, 2011 and ending on September 13, 2011 is not included in calculating Office delay.

CONCLUSION

In view thereof, it is concluded that the patent term adjustment of 742 days indicated on the patent is correct.

Telephone inquiries specific to this matter should be directed to the undersigned at (571) 272-3219.

Shirene Willis Brantley

Shirene Willis Brantley
Senior Petitions Attorney
Office of Petitions

UNITED STATES PATENT AND TRADEMARK OFFICE

Commissioner for Patents
United States Patent and Trademark Office
P.O. Box 1450
Alexandria, VA 22313-1450
www.uspto.gov

FISH & RICHARDSON PC
PO BOX 1022
MINNEAPOLIS MN 55440-1022

MAILED

NOV 30 2011

OFFICE OF PETITIONS

In re Patent No. 8,017,738	: DECISION ON
Maeda, et al.	: REQUEST FOR RECONSIDERATION
Application No. 11/980,135	: of PATENT TERM ADJUSTMENT
Issue Date: September 13, 2011	:
Filed: October 30, 2007	:
Attorney Docket No. 26570-0096003	:

This is a decision on the "APPLICATION FOR PATENT TERM ADJUSTMENT UNDER 37 C.F.R. §1.705(d)", filed November 10, 2011, requesting that the patent term adjustment indicated on the above-identified patent be corrected from eight hundred twenty-nine (829) days to nine hundred sixty-one (961) days.

The petition to correct the patent term adjustment indicated on the above-identified patent is **DISMISSED.**

On November 10, 2011, the instant application matured into U.S. Patent No. 8,017,738 with a patent term adjustment of eight hundred twenty-nine (829) days. The Office determined a patent term adjustment of 829 days based upon 815 days of "A" delay and 176 days of "B" delay, reduced by 16 days of Applicant delay and 146 days of overlap between "A" and "B" delay.

Petitioner argues that even though he filed an RCE on April 25, 2011, he should be awarded 37 CFR 1.703(b) "over three year" delay from the time the Office mailed a Notice of Allowance on May 5, 2011 until the issue date of the patent. In other words, Petitioner argue that no continued examination took place during this time period, and the Office should be accorded 132 additional days of delay pursuant to 37 CFR 1.703(b). Petitioner's argument has been considered, but is not persuasive.

RELEVANT STATUTE AND REGULATIONS

The statutory basis for calculation of "B delay" is 35 U.S.C. 154(b)(1)(B) GUARANTEE OF NO MORE THAN 3-YEAR APPLICATION PENDENCY, which provides that:

Subject to the limitations under paragraph (2), if the issue of an original patent is delayed due to the failure of the United States Patent and Trademark Office to issue a patent within 3 years after the actual filing date of the application in the United States, not including —

> (i) any time consumed by continued examination of the application requested by the applicant under section 132(b);
>
> (ii) any time consumed by a proceeding under section 135(a), any time consumed by the imposition of an order under section 181, or any time consumed by appellate review by the Board of Patent Appeals and Interferences or by a Federal court; or
>
> (iii) any delay in the processing of the application by the United States Patent and Trademark Office requested by the applicant except as permitted by paragraph (3)(C), the term of the patent shall be extended 1 day for each day after the end of that 3-year period until the patent is issued.

The implementing regulation, 37 CFR 1.702(b) provides that:

Subject to the provisions of 35 U.S.C. 154(b) and this subpart, the term of an original patent shall be adjusted if the issuance of the patent was delayed due to the failure of the Office to issue a patent within three years after the date on which the application was filed under 35 U.S.C. 111(a) or the national stage commenced under 35 U.S.C. 371(b) or (f) in an international application, but not including:

> (1) Any time consumed by continued examination of the application under 35 U.S.C. 132(b);
> (2) Any time consumed by an interference proceeding under 35 U.S.C. 135(a);
> (3) Any time consumed by the imposition of a secrecy order under 35 U.S.C. 181;
> (4) Any time consumed by review by the Board of Patent Appeals and Interferences or a Federal court; or
> (5) Any delay in the processing of the application by the Office that was requested by the applicant.

OPINION

Petitioner's arguments have been considered, but not found persuasive. The Office calculated the period of "B delay" pursuant to 37 CFR 1.702(b)(1) as 176 days based on the application having been filed on October 30, 2007, and a request for continued examination under 132(b) having been filed on April 25, 2011. In other words, the 132 day period beginning on the date of

mailing of the notice of allowance on May 5, 2011 to the date of issuance of the patent was considered time consumed by continued examination of an application under 35 U.S.C. 132(b) and was not included in the "B delay".

The Office's calculation of "B delay" is correct. The "B delay" is an adjustment entered if the issuance of the patent was delayed due to the failure of the Office to issue a patent within three years after the date on which the application was filed. However, the adjustment does not include, among other things, any time consumed by continued examination of the application at the request of the applicant under 35 U.S.C. 132(b)[1]. So, with respect to calculating the "B delay" where applicant has filed a request for continued examination, the period of adjustment is the number of days, if any, in the period beginning on the day after the date that is three years after the date on which the application was filed under 35 U.S.C. 111(a) or the national stage commenced under 35 U.S.C. 371(b) or (f) in an international application and ending on the date a patent was issued, but not including the number of days in the period beginning on the date on which a request for continued examination of the application under 35 U.S.C. 132(b) was filed and ending on the date the patent was issued.

Further, counting the period of time excluded from the "B delay" for the filing of a request for continued examination under 35 U.S.C. 132(b), from the date on which the request for continued examination is filed to the date the patent is issued is proper. Petitioner does not dispute that time consumed by continued examination of an application under 35 U.S.C. 132(b) is properly excluded and that the calculation of the excluded period begins on the date of filing of the request for continued examination. At issue is what further processing or examination beyond the date of filing of the request for continued examination is not any time consumed by continued examination of the application under 35 U.S.C. 132(b). The USPTO indicated in September of 2000 in the final rule to implement the patent term adjustment provisions of the AIPA that once a request for continued examination under 35 U.S.C. 132(b) and 37 CFR 1.114 is filed in an application, any further processing or examination of the application, including granting of a patent, is by virtue of the continued examination given to the application under 35 U.S.C. 132(b) and CFR 1.114. See Changes to Implement Patent Term Adjustment under Twenty-Year Patent Term, 65 Fed. Reg. 56366, 56376 (Sept. 18, 2000) (response to comment 8). Thus, the excluded period begins with the filing of the request for continued examination and ends with the issuance of the patent.

---

[1] Pursuant to 35 U.S.C. 132(b) , 37 CFR 1.114 provides for continued examination of an application, as follows:

(a) If prosecution in an application is closed, an applicant may request continued examination of the application by filing a submission and the fee set forth in § 1.17(e) prior to the earliest of:

(1) Payment of the issue fee, unless a petition under § 1.313 is granted;

(2) Abandonment of the application; or

(3) The filing of a notice of appeal to the U.S. Court of Appeals for the Federal Circuit under 35 U.S.C. 141, or the commencement of a civil action under 35 U.S.C. 145 or 146, unless the appeal or civil action is terminated.

(b) Prosecution in an application is closed as used in this section means that the application is under appeal, or that the last Office action is a final action (§ 1.113), a notice of allowance (§ 1.311), or an action that otherwise closes prosecution in the application.

Petitioner's argument that the period of time after the issuance of a notice of allowance on a request for continued examination is not "any time consumed by continued examination requested by the applicant under section 132(b)" within the meaning of 35 U.S.C. 154(b)(1)(B)(i) is not availing. This limitation is not supported by the statutory language. Garcia v. United States, 469 U.S. 70, 75 (1984) ("only the most extraordinary showing of contrary intentions from [legislative history] would justify a limitation on the 'plain meaning' of the statutory language"). BP Am. Prod. Co. v. Burton, 549 U.S. 84, 91 (2006) ("Unless otherwise defined, statutory terms are generally interpreted in accordance with their ordinary meaning"). The statute provides for a guarantee of no more than 3-year application pendency, by providing for an adjustment in the patent term:

First, "Subject to the limitations of paragraph (2)," means that the limitations of paragraph 2 apply to this paragraph's adjustment of patent term. That is, the day-to-day extension of patent term for pendency beyond the 3 year period is restricted as follows: 1) "B delay" cannot accrue for days of "A delay" that overlap, 2) the patent term cannot be extended beyond disclaimed term, and 3) the period of adjustment, including accrued "B delay," will be reduced for applicant delay.

Second, "if the issue of an original patent is delayed due to the failure of the United States Patent and Trademark Office to issue a patent within 3 years after the actual filing date of the application in the United States," meaning that the condition must first occur that the issuance of an original patent (35 U.S.C. 153), not merely the issuance of a notice of allowance, is delayed due to the Office's failure to issue a patent (sign and record a patent grant in the name of the United States), not merely mail a notice of allowance, within 3 years after the actual filing date of the application in the United States. This provision gives the Office a three-year period to issue a patent (sign and record a patent grant in the name of the United States) after the application filing date before an adjustment will accrue for "B delay."

Third, "not including- (i) any time consumed by continued examination of the application requested by the applicant under section 132(b); (ii) any time consumed by a proceeding under section 135(a), any time consumed by the imposition of an order under section 181, or any time consumed by appellate review by the Board of Patent Appeals and Interferences or by a Federal court; or (iii) any delay in the processing of the application by the United States Patent and Trademark Office requested by the applicant except as permitted by paragraph (3)(C), meaning that the three-year period does not include "any time consumed by" or "any delay in processing," as specified in clauses (i)-(iii). This language correlates to 35 U.S.C. 154(b)(1)(A) which likewise provides the basis for determining the period given the Office to take the specified actions before an adjustment will accrue for "A delay" (e.g., extended for 1 day after the day after the period specified in clauses (i)-(iv)).

Furthermore, these clauses are interpreted using their ordinary meanings. Nonetheless, the context of the legislation should be considered. As stated in Wyeth v. Dudas, (580 F. Supp. 2d 138), because the clock for calculating the 20-year patent term begins to run on the filing date,

and not on the day the patent is actually granted, some of the effective term of a patent is consumed by the time it takes to prosecute the application. To mitigate this effect, the statute, *inter alia*, grants adjustments of patent term whenever the patent prosecution takes more than three years, regardless of the reason. The time consumed by prosecution of the application includes every day the application is pending before the Office from the actual filing date of the application in the United States until the date of issuance of the patent. The time it takes to prosecute the application ends not with the mailing of the notice of allowance, but with the issuance of the patent.

Thus, not including "any time consumed by" means not including any days used to prosecute the application as specified in clauses (i)-(ii)[2]. Clause (i) specifies "any time consumed by continued examination of the application requested by the applicant under section 132(b)." Clause (ii) specifies "any time consumed by a proceeding under section 135(a), any time consumed by the imposition of an order under section 181, or any time consumed by appellate review by the Board of Patent Appeals and Interferences or by a Federal court." "Time" in the context of this legislation throughout refers to days. "Consumed by" means used by or used in the course of. Websters Collegiate Dictionary, (11th ed.). The "any" signifies that the days consumed by are "any" of the days in the pendency of the application, and not just days that occur after the application has been pending for 3 years. As such, "any time consumed by" refers to any days used in the course of 1) continued examination of the application under section 132(b)(the filing of a request for continued examination), 2) interference proceedings, 3) secrecy orders, and 4) appellate review. Thus, that 3-year period given to the Office to issue a patent before an adjustment will accrue for "B delay" does not include any days used in the course of or any time consumed by clauses (i)-(ii), including any time consumed by the filing of a request for continued examination.

Fourth, "the term of the patent shall be extended 1 day for each day after the end of that 3-year period until the patent is issued" meaning that the consequence of this failure is that after "the end of that 3-year period" an additional 1 day of patent term will accrue for each day that the application is pending until the day the patent is issued.

The "time consumed by" or used in the course of the continued examination of the application requested by the applicant under section 132(b) does not end until issuance of the patent. 35 U.S.C. 132(b) was enacted under the same title, the "American Inventors Protection Act of 1999," as 35 U.S.C. 154(b). Section 4403 of the AIPA amended 35 U.S.C. § 132 to provide, at the request of the applicant, for continued examination of an application for a fee (request for continued examination or RCE practice), without requiring the applicant to file a continuing application under 37 CFR 1.53(b) or a continued prosecution application (CPA) under 37 CFR

---

[2] Clause (iii) provides for not including (iii) any delay in the processing of the application by the United States Patent and Trademark Office requested by the applicant except as permitted by paragraph (3)(C), the term of the patent shall be extended 1 day for each day after the end of that 3-year period until the patent is issued. It is noted that paragraph (3)(C) allows with an adequate showing by applicant for reinstatement of no more than 3 months of the patent term reduced for applicant delay in taking in excess of three months to respond.

1.53(d). Thus, clause (i) is different from clause (ii) in that clause (i) refers to an examination process whereas clause (ii) refers to time consumed by proceedings (interferences, secrecy orders and appeals) in an application.

By nature, the time used in the course of the examination process continues to issuance of the patent. The examination process involves examining the application to ascertain whether it appears that the applicant is entitled to a patent under the law. See 35 U.S.C. 131 ("[t]he Director shall cause an examination to be made of the application and the alleged new invention; and if on such examination it appears that the applicant is entitled to a patent under the law, the Director shall issue a patent therefor"). If on examination it appears that the applicant is entitled to a patent, the USPTO issues a notice of allowance. See 35 U.S.C. 151 ("[i]f it appears that applicant is entitled to a patent under the law, a written notice of allowance of the application shall be given or mailed to the applicant"). If on examination it appears that the applicant is not entitled to a patent, the USPTO issues a notice (an Office action) stating the applicable rejection, objection, or other requirement, with the reasons therefor. See 35 U.S.C. 132 ("[w]henever, on examination, any claim for a patent is rejected, or any objection or requirement made, the Director shall notify the applicant thereof, stating the reasons for such rejection, or objection or requirement, together with such information and references as may be useful in judging of the propriety of continuing the prosecution of his application"). Neither the issuance of a notice of allowance nor the insurance of an Office action terminates the examination process. If after the issuance of an Office action under 35 U.S.C. 132 it subsequently appears that the applicant is entitled to a patent (e.g., in response to an argument or amendment by the applicant), the USPTO will issue a notice of allowance. Conversely, if after the issuance of a notice of allowance under 35 U.S.C. 151 it subsequently appears that the applicant is not entitled to a patent (e.g., in response to information provided by the applicant or uncovered by the USPTO), the USPTO will withdraw the application from issuance and issue an Office action under 35 U.S.C. 132 stating the applicable rejection, objection, or other requirement, with the reasons therefor.

As held in Blacklight Power, the USPTO's responsibility to issue a patent containing only patentable claims does not end with the issuance of a notice of allowance under 35 U.S.C. 151. See BlackLight Power, Inc. v. Rogan, 295 F.3d 1269, 1273 (Fed. Cir. 2002). Rather, if there is any substantial, reasonable ground within the knowledge or cognizance of the Director as to why an application should not issue, it is the USPTO's duty to refuse to issue the patent even if a notice of allowance has previously been issued for the application. See In re Drawbaugh, 9 App. D.C. 219, 240 (D.C. Cir 1896).

Moreover, the applicant continues to be engaged in the examination process after the mailing of the notice of allowance. 37 CFR 1.56 makes clear that the applicant has a duty to disclose information material to patentability as long as the application is pending before the USPTO (i.e., until a patent is granted or the application is abandoned). See 37 CFR 1.56(a) ("[t]he duty to disclose information exists with respect to each pending claim until the claim is cancelled or withdrawn from consideration, or the application becomes abandoned"). 37 CFR 1.97 and 1.98 provide for the consideration of information submitted by the applicant after a notice of allowance has been mailed. See 37 CFR 1.97(d). In addition, 37 CFR 1.312 provides for the

amendment of an application after a notice of allowance has been mailed. In fact, the request for examination procedures[3] permit the filing of a request for continued examination under 37 CFR 1.114 even after the issuance of a notice of allowance under 35 U.S.C. 151. See 37 CFR 1.114(a)(1).

As the examination process does not terminate with the mailing of the notice of allowance, the time consumed by continued examination requested by the applicant under section 132(b) does not terminate with the mailing of the notice of allowance. All the time the application is pending from the date of filing of the request for continued examination to the mailing of the notice of allowance through issuance of the patent is a consequence of the filing of the request for continued examination. Further action by the Office is pursuant to that request. Applicant has gotten further prosecution of the application without having to file a continuing application under 37 CFR 1.53(b).

All of the continued examination pursuant to the filing of the request by the applicant is properly excluded from the delay attributed to the Office. 35 U.S.C. 154(b)(1)(B)'s guarantee of a total application pendency of no more than three years provides for adjustment of the patent term for delay due to the Office's failure to issue the patent within three years, but does not include "any time consumed by continued examination requested by the applicant under 35 U.S.C. 132(b)." It is not necessary to mitigate the effect on the 20-year term to the extent that applicant has requested that the Office continue to examine the application via a request for continued examination, in lieu of, the filing of a continuing application under 37 CFR 1.53(b).

In this instance, a request for continued examination was filed on April 25, 2011, and the patent issued by virtue of that request on September 13, 2011. Pursuant to 35 U.S.C. 154(b)(1)(B)(i), the period beginning on April 25, 2011 and ending on September 13, 2011 is not included in calculating Office delay.

CONCLUSION

In view thereof, it is concluded that the patent term adjustment of 829 days indicated on the patent is correct.

Telephone inquiries specific to this matter should be directed to the undersigned at (571) 272-3207.

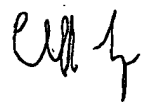

Cliff Congo
Petitions Attorney
Office of Petitions

---

[3] Thus, on occasion, even where a request for continued examination has already been filed and a notice of allowance issued pursuant to that request, applicant may file a further request for continued examination.

UNITED STATES PATENT AND TRADEMARK OFFICE

UNITED STATES DEPARTMENT OF COMMERCE
United States Patent and Trademark Office
Address: COMMISSIONER FOR PATENTS
P.O. Box 1450
Alexandria, Virginia 22313-1450
www.uspto.gov

APPLICATION NO.	FILING DATE	FIRST NAMED INVENTOR	ATTORNEY DOCKET NO.	CONFIRMATION NO.
11/980,178	10/30/2007	Toshio Sugimoto	4041P-000089	6762

7590 09/01/2010
HARNESS, DICKEY & PIERCE, P.L.C.
P.O. BOX 828
BLOOMFIELD HILLS, MI 48303

EXAMINER
LOUIE, WAE LENNY

ART UNIT	PAPER NUMBER
3661	

MAIL DATE	DELIVERY MODE
09/01/2010	PAPER

DECISION GRANTING PETITION UNDER 37 CFR 1.138(d)

The declaration of express abandonment is recognized

This is in response to the petition under 37 CFR 1.138(d), requesting for a refund of any previously paid search fee and excess claims fee in the above-identified application.

The petition is granted.

The express abandonment is recognized. Any previously paid search fee and excess claims fee are hereby refunded.

Telephone inquiries should be directed to the Office of Data Management at (571) 272-4200.

Patent Publication Branch
Office of Data Management

Adjustment date: 09/01/2010 NFANNEN
11/01/2007 EHAILE1 00000321 11980178
02 FC:1111 -510.00 OP

FORM PET651G (Rev. 08/07)

UNITED STATES PATENT AND TRADEMARK OFFICE

Commissioner for Patents
United States Patent and Trademark Office
P.O. Box 1450
Alexandria, VA 22313-1450
www.uspto.gov

HULSEY IP INTELLECTUAL PROPERTY LAWYERS, P.C.
919 CONGRESS AVENUE, SUITE 919
AUSTIN TX 78701

MAILED

DEC 10 2010

OFFICE OF PETITIONS

In re Application of	:	
Arunachalam, Lakshmi	:	DECISION ON PETITION
Application No. 11/980,185	:	TO WITHDRAW
Filed: October 30, 2007	:	FROM RECORD
Attorney Docket No. WEBX006RE	:	

This is a decision on the Request to Withdraw as Attorney or Agent of Record under 37 C.F.R. § 1.36(b), filed November 30, 2010.

The request is **APPROVED**.

A grantable request to withdraw as attorney/agent of record must be signed by every attorney/agent seeking to withdraw or contain a clear indication that one attorney is signing on behalf of another/others. The Office will require the practitioner(s) to certify that he, she or they have: (1) given reasonable notice to the client, prior to the expiration of the reply period, which the practitioner(s) intends to withdraw from employment; (2) delivered to the client or a duly authorized representative of the client all papers and property (including funds) to which the client is entitled; and (3) notified the client of any replies that may be due and the time frame within which the client must respond, pursuant to 37 CFR 10.40 (c).

The request was signed by John Temple Keller on behalf of all attorneys/agents of record who are associated with Customer Number 48746. All attorneys/agents associated with Customer Number 48746 have been withdrawn. Applicant is reminded that there is no attorney of record at this time.

All future correspondence will be directed to the assignee, WebXchange, Inc., at the address indicated below.

Telephone inquires concerning this decision should be directed to the undersigned at (571) 272-3206. All other inquires concerning either the examination or status of the application should be directed to the Technology Center.

Liana Walsh
Petitions Examiner
Office of Petitions

cc: WEBXCHANGE, INC.
222 STANFORD AVENUE
MENLO PARK CA 94025

Doc Code: PET.AUTO **Document Description: Petition automatically granted by EFS-Web**	PTO/SB/83 U.S. Patent and Trademark Office Department of Commerce

Electronic Petition Request	**REQUEST FOR WITHDRAWAL AS ATTORNEY OR AGENT AND CHANGE OF CORRESPONDENCE ADDRESS**
Application Number	11980185
Filing Date	30-Oct-2007
First Named Inventor	Lakshmi Arunachalam
Art Unit	2448
Examiner Name	VIET VU
Attorney Docket Number	
Title	METHOD AND APPARATUS FOR ENABLING REAL-TIME BI-DIRECTIONAL TRANSACTIONS ON A NETWORK

◉ Please withdraw me as attorney or agent for the above identified patent application and the practitioners of record associated with Customer Number: 23122

The reason(s) for this request are those described in 37 CFR:

10.40(c)(1)(iv)

Certifications

☒ I/We have given reasonable notice to the client, prior to the expiration of the response period, that the practitioner(s) intend to withdraw from employment

☒ I/We have delivered to the client or a duly authorized representative of the client all papers and property (including funds) to which the client is entitled

☒ I/We have notified the client of any responses that may be due and the time frame within which the client must respond

Change the correspondence address and direct all future correspondence to the first named inventor or assignee that has properly made itself of record pursuant to 37 CFR 3.71:

Name	Lakshmi Arunachalam
Address	222 Stanford Avenue
City	Menlo Park
State	CA
Postal Code	94025
Country	US

I am authorized to sign on behalf of myself and all withdrawing practitioners.	
Signature	/Stephen J. Weed/
Name	Stephen J. Weed
Registration Number	45202

UNITED STATES PATENT AND TRADEMARK OFFICE

Commissioner for Patents
United States Patent and Trademark Office
P.O. Box 1450
Alexandria, VA 22313-1450
www.uspto.gov

Decision Date : July 1,2011

In re Application of :

Lakshmi Arunachalam

Application No : 11980185

Filed : 30-Oct-2007

Attorney Docket No :

DECISION ON REQUEST TO WITHDRAW AS ATTORNEY/AGENTOF RECORD

This is an electronic decision on the Request to Withdraw as attorney or agent of record under 37 CFR § 1.36(b), filed July 1,2011

The request is **APPROVED.**

The request was signed by Stephen J. Weed (registration no. 45202) on behalf of all attorneys/agents associated with Customer Number 23122 . All attorneys/agents associated with Cusotmer Number 23122 have been withdrawn.

Since there are no remaining attorneys of record, all future communications from the Office will be directed to the first named inventor or assignee that has properly made itself of record pursuant to 37 CFR 3.71, with correspondence address:

Name	Lakshmi Arunachalam
Name2	
Address 1	222 Stanford Avenue
Address 2	
City	Menlo Park
State	CA
Postal Code	94025
Country	US

As a reminder, requester is required to inform the first named inventor or assignee that has properly made itself of record pursuant to 37 CFR 3.71 of the electronically processed petition.

Telephone inquiries concerning this decision should be directed to the Patent Electronic Business Center (EBC) at 866-217-9197.

Office of Petitions

UNITED STATES PATENT AND TRADEMARK OFFICE

UNITED STATES DEPARTMENT OF COMMERCE
United States Patent and Trademark Office
Address: COMMISSIONER FOR PATENTS
P.O. Box 1450
Alexandria, Virginia 22313-1450
www.uspto.gov

APPLICATION NO.	FILING DATE	FIRST NAMED INVENTOR	ATTORNEY DOCKET NO.	CONFIRMATION NO.
11/980,188	10/30/2007	Karri Ranta-Aho	800.0046.U1(US)	5859

10948 7590 12/20/2010
Harrington & SMith , Attorneys At Law, LLC
4 Research Drive, Suite 202
Shelton, CT 06484

EXAMINER
BEDNASH, JOSEPH A

ART UNIT	PAPER NUMBER
2461	

MAIL DATE	DELIVERY MODE
12/20/2010	PAPER

Please find below and/or attached an Office communication concerning this application or proceeding.

The time period for reply, if any, is set in the attached communication.

SPE RESPONSE FOR CERTIFICATE OF CORRECTION

Paper No.:20101215

DATE : December 15, 2010

TO SPE OF : ART UNIT 2461

SUBJECT : Request for Certificate of Correction on Patent No.: 7,715,430

A response is requested with respect to the accompanying request for a certificate of correction.

Please complete this form and return with file, within **7** days to:
Certificates of Correction Branch - ST (South Tower) 9A22
Palm location **7590** - Tel. No. (703) 305-8309

With respect to the change(s) requested, correcting Office and/or Applicant's errors, should the patent read as shown in the certificate of correction? No new matter should be introduced, nor should the scope or meaning of the claims be changed.

Thank You For Your Assistance **Certificates of Correction Branch**

The request for issuing the above-identified correction(s) is hereby:

Note your decision on the appropriated box.

☒ **Approved** All changes apply.

☐ **Approved in Part** Specify below which changes **do not** apply.

☐ **Denied** State the reasons for denial below.

Comments:

/Huy D Vu/
Supervisory Patent Examiner, Art Unit 2461

UNITED STATES PATENT AND TRADEMARK OFFICE

Commissioner for Patents
United States Patent and Trademark Office
P.O. Box 1450
Alexandria, VA 22313-1450
www.uspto.gov

MAILED
AUG 11 2011
OFFICE OF PETITIONS

COOLEY LLP
ATTN: Patent Group
Suite 1100
777 - 6th Street, NW
WASHINGTON DC 20001

In re Application of	:	
Pamela Palmer et al.	:	
Application No. 11/980,216	:	DECISION ON PETITION
Filed: October 30, 2007	:	
Attorney Docket No. ACEL-011/05US	:	
312523-2031		

This is a decision on the petition, filed July 8, 2011, which is being treated as a petition under 37 CFR 1.181 requesting withdrawal of the holding of abandonment in the above-identified application.

The petition is **GRANTED**.

This application was held abandoned as a result of petitioner's failure to file an appeal brief (and fee required by 37 CFR 41.20(b)(2)) within two (2) months of the Notice of Appeal filed December 9, 2010. An Appeal Brief was due on or before February 9, 2011, or, on or before July 9, 2011, with a five (5)-month extension of time. A Notice of Abandonment was mailed May 24, 2011.

Petitioner states that the Notice of Abandonment mailed May 24, 2011 is in error because the petitioner still had time until July 9, 2011 to file an appeal brief with a purchase of a five (5) month extension of time under 37 CFR § 1.136(a).

The file record indicates that a timely response was received on July 8, 2011 which included a Request for Continued Examination, an amendment and fee along with the fee for a five (5) month extension of time.

Accordingly, the holding of abandonment is hereby withdrawn and the application restored to pending status.

Telephone inquiries regarding this decision should be directed to Terri Johnson at (571) 272-2991.

This application is being referred to Technology Center AU 3767 for appropriate action in the normal course of business on the RCE and amendment filed therewith.

/Ramesh Krishnamurthy/
Ramesh Krishnamurthy
Petitions Examiner
Office of Petitions

04-25-11

Doc Code: PET.RELIEF
Document Description: Certification and Request for Disaster Relief

PTO/SB/425 (03-11)

OPAP
APR 13 2011
IAP11
PATENT & TRADEMARK OFFICE

CERTIFICATION AND REQUEST FOR RELIEF DUE TO EVENTS OF MARCH 11, 2011, IN JAPAN (Page 1 of 2)

Nonprovisional Application Number or Control Number (if applicable): 11/980,234	Patent Number (if applicable):
First Named Inventor: Maung Han	Title of Invention: Map scroll method and apparatus for ....

APPLICANT/PATENTEE/REEXAMINATION PARTY HEREBY CERTIFIES AND REQUESTS THE FOLLOWING FOR THE ABOVE-IDENTIFIED APPLICATION/PATENT/REEXAMINATION PROCEEDING.

1. FOR PATENT APPLICATIONS AND REEXAMINATION PROCEEDINGS PENDING IN THE USPTO AS OF MARCH 11, 2011, IN WHICH A COMMUNICATION FROM THE USPTO IS SOUGHT TO BE REMAILED:

   a. One or more inventors, an assignee, or a correspondence address (for the application/proceeding) is in an area of Japan affected by the earthquake and/or tsunami of March 11, 2011.

   b. A reply or response to an Office action (final, non-final, or other), a notice of allowance, or other Office notice (hereinafter collectively referred to as "Office communication") is outstanding on March 11, 2011.

   c. The statutory or non-statutory time period set for response has not yet expired.

   d. Withdrawal and reissuance of the Office communication is requested.

   e. It is acknowledged that if this request is not made within sufficient time so that withdrawal and reissuance of the Office communication occur prior to expiration of the statutory or non-statutory time period (as permitted to be extended under 37 CFR 1.136(a), or as extended under 37 CFR 1.550(c) or 1.956), this request may not be granted.

   f. The need for the reissuance of the Office communication was due to the effects of the earthquake and/or tsunami of March 11, 2011.

   g. This request is being sent via EFS-Web or by mail directed to Mail Stop Petition, Commissioner for Patents, P.O. Box 1450, Alexandria, VA 22313-1450.

2. FOR PATENTEES WHO WERE UNABLE TO TIMELY PAY A PATENT MAINTENANCE FEE DURING THE SIX-MONTH GRACE PERIOD FOLLOWING THE WINDOW TO PAY THE MAINTENANCE FEE:

   a. The original window of time to pay the maintenance fee without the surcharge required by 37 CFR 1.20(h) expired on or after March 11, 2011.

   b. The delay in paying the fee was due to the effects of the earthquake and/or tsunami of March 11, 2011.

   c. The USPTO is requested to *sua sponte* waive the surcharge in 37 CFR 1.20(h) for paying a maintenance fee during the six-month grace period following the window to pay the maintenance fee.

   d. This request and payment of the maintenance fee during the six-month grace period following the window to pay the maintenance fee is being mailed to: Director of the United States Patent and Trademark Office, Attn: Maintenance Fee, 2051 Jamieson Avenue, Suite 300, Alexandria, VA 22314; or being transmitted via facsimile to: 571-273-6500.

AUS06028, ALPINE.107AUS

CERTIFICATION AND REQUEST FOR RELIEF DUE TO EVENTS OF MARCH 11, 2011, IN JAPAN (Page 2 of 2)

3. FOR PATENTEES WHO NEED TO FILE A PETITION TO ACCEPT A DELAYED MAINTENANCE FEE PAYMENT UNDER 37 CFR 1.378(c):

   a. The maintenance fee payment was required to have been paid after March 10, 2011.

   b. A petition under 37 CFR 1.378(c) (using USPTO form PTO/SB/66 – Petition to Accept Unintentionally Delayed Payment of Maintenance Fee in an Expired Patent (37 CFR 1.378(c))) is being promptly filed accompanied by the applicable maintenance fee payment (but not the surcharge under 37 CFR 1.20(i)).

   c. The delay in payment of the maintenance fee was due to the effects of the earthquake and/or tsunami of March 11, 2011.

   d. The USPTO is requested to *sua sponte* waive the surcharge in 37 CFR 1.20(i) for accepting a delayed maintenance fee payment.

   e. It is acknowledged that the petition to accept a delayed maintenance fee payment under 37 CFR 1.378(c) must be filed by March 11, 2012, in order to be entitled to a waiver of the surcharge under 37 CFR 1.20(i).

   f. It is acknowledged that the petition to accept a delayed maintenance fee payment under 37 CFR 1.378(c) must be filed within twenty-four months from the expiration date of the patent. *See* 35 U.S.C 41(c).

   g. This request and the petition to accept a delayed maintenance fee payment under 37 CFR 1.378(c) is being submitted via EFS-Web or by mail directed to Mail Stop Petition, Commissioner for Patents, P.O. Box 1450, Alexandria, VA 22313-1450.

4. FOR NONPROVISIONAL PATENT APPLICATIONS FILED WITHOUT AN EXECUTED OATH OR DECLARATION OR PAYMENT OF THE BASIC FILING FEE, SEARCH FEE, AND/OR EXAMINATION FEE:

   a. The nonprovisional patent application was filed on or after March 11, 2011, and prior to April 12, 2011.

   b. The late filing of the oath or declaration or the basic filing fee, search fee, or examination fee was due to the effects of the earthquake and/or tsunami of March 11, 2011.

   c. The USPTO is requested to *sua sponte* waive the surcharge set forth in 37 CFR 1.16(f) for the late filing of the oath or declaration or basic filing fee, search fee, and/or examination fee.

   d. This request, together with the executed oath or declaration or the basic filing fee, search fee, or examination fee, as well as the reply to the Notice to File Missing Parts, is being submitted via EFS-Web or by mail directed to Mail Stop Missing Parts, Commissioner for Patents, P.O. Box 1450, Alexandria, VA 22313-1450.

Signature Yasuo Muramatsu	Date April 11, 2011
Name (Print/Typed) Yasuo Muramatsu	Practitioner Registration Number 38,684

***Note**: Signatures of all the inventors, § 1.41(b) applicants, or assignees of record of the entire interest or their representative(s), or reexamination requesters at the appeal stage are required in accordance with 37 CFR 1.33 and 11.18. Please see 37 CFR 1.4(d) for the form of the signature. If necessary, submit multiple forms for more than one signature, see below*.*

☐ *Total of _____ forms are submitted.

UNITED STATES PATENT AND TRADEMARK OFFICE

Commissioner for Patents
United States Patent and Trademark Office
P.O. Box 1450
Alexandria, VA 22313-1450
www.uspto.gov

MURAMATSU & ASSOCIATES
SUITE 310
114 PACIFICA
IRVINE CA 92618

MAILED
APR 26 2011
OFFICE OF PETITIONS

In re Application of	:	
Maung Han	:	
Application No. 11/980,234	:	DECISION ON PETITION
Filed: October 30, 2007	:	
Attorney Docket No. ALPINE.107AUS	:	

This is a decision on the request filed April 13, 2011, seeking relief under the provisions of an announcement by the Under Secretary and Director of the United States Patent and Trademark Office on March 17, 2011, http://www.uspto.gov/patents/announce/japan_relief_2011mar17.pdf, providing relief to inventors and patent owners in areas affected by the earthquake and resulting tsunami of March 11, 2011.

The request for relief is **GRANTED**.

In the above-identified application, an Office action was mailed on December 3, 2010. The instant petition was filed prior to the expiration of the period for reply and the certifications for granting of relief are considered to be met by the submission of the request.

Telephone inquires concerning this decision should be directed to the undersigned at 571-272-7751. All other inquires concerning either the examination or status of the application should be directed to the Technology Center.

This application is being referred to the Technology Center, Art Unit 2628 for re-mailing the Office action of December 3, 2010. The period for reply will run from the mailing date of the Office action.

/Joan Olszewski/
Joan Olszewski
Petitions Examiner
Office of Petitions

UNITED STATES PATENT AND TRADEMARK OFFICE

UNITED STATES DEPARTMENT OF COMMERCE
United States Patent and Trademark Office
Address: COMMISSIONER FOR PATENTS
P.O. Box 1450
Alexandria, Virginia 22313-1450
www.uspto.gov

APPLICATION NO.	FILING DATE	FIRST NAMED INVENTOR	ATTORNEY DOCKET NO.	CONFIRMATION NO.
11/980,251	10/30/2007	Sung-soo Lee	PANK02443 US	6439

7590 01/03/2011

Innovation Counsel LLP
21771 Stevens Creek Blvd
Ste. 200A
Cupertino, CA 95014

EXAMINER
FEATHERLY, HANA SANEI

ART UNIT	PAPER NUMBER
2889	

MAIL DATE	DELIVERY MODE
01/03/2011	PAPER

ACKNOWLEDGEMENT OF REQUEST

Notice of Allowance/Allowability Mailed

The request to print a color drawing reference as the first paragraph in the portion of the specification containing a brief description of the drawings as required by 37 CFR 1.84 and MPEP § 608.02 has been received by the United States Patent and Trademark Office and will be entered into the specification.

571-272-4200 or 1-888-786-0101
Application Assistance Unit
Office of Data Management

FORM PTOM327-5 (Rev. 02/08)

UNITED STATES PATENT AND TRADEMARK OFFICE

Commissioner for Patents
United States Patent and Trademark Office
P.O. Box 1450
Alexandria, VA 22313-1450
www.uspto.gov

December 30, 2010

Innovation Counsel LLP
21771 Stevens Creek Blvd
Ste. 200A
Cupertino CA 95014

In re Application of	:	
Sung-Soo Lee, et al	:	**DECISION ON PETITION**
Application No. 11980251	:	
Filed: 10/30/2007	:	***ACCEPTANCE OF COLOR***
Attorney Docket No. **PANK02443 US**	:	***DRAWINGS***

This is a decision on the Petition to Accept Color Drawings under 37 C.F.R 1.84 (a) (2), received in the United States Patent and Trademark Office (USPTO) October 30, 2007.

The petition is **GRANTED**.

A grantable petition under 37 C.F.R. 1.84(a) (2) must be accompanied by the following.

1. The fee set forth under 37 C.F.R. 1.17(h),
2. Three (3) sets of the color drawings in question, or (1) set if filed via EFS, and
3. The specification contains appropriate language referring to the color drawings as the first paragraph in that portion of the specification relating to the brief description of the drawings.

The petition was accompanied by all of the required fees and drawings. The specification contains the appropriate language. Therefore, the petition is GRANTED.

Telephone inquires relating to this decision may be directed to the undersigned in the Office of Data Management at 571-272-4200.

/Laura Feldman/
Quality Control Specialist
Office of Data Management
Publications Branch

UNITED STATES PATENT AND TRADEMARK OFFICE

UNITED STATES DEPARTMENT OF COMMERCE
United States Patent and Trademark Office
Address: COMMISSIONER FOR PATENTS
P.O. Box 1450
Alexandria, Virginia 22313-1450
www.uspto.gov

APPLICATION NO.	FILING DATE	FIRST NAMED INVENTOR	ATTORNEY DOCKET NO.	CONFIRMATION NO.
11/980,275	10/30/2007	Thomas J. Cebasek	PREMIX-W	9186

28862 7590 04/15/2011
HUDAK, SHUNK & FARINE, CO., L.P.A.
2020 FRONT STREET
SUITE 307
CUYAHOGA FALLS, OH 44221

EXAMINER
KOLLIAS, ALEXANDER C

ART UNIT	PAPER NUMBER
1725	

MAIL DATE	DELIVERY MODE
04/15/2011	PAPER

Please find below and/or attached an Office communication concerning this application or proceeding.

The time period for reply, if any, is set in the attached communication.

UNITED STATES PATENT AND TRADEMARK OFFICE

Commissioner for Patents
United States Patent and Trademark Office
P.O. Box 1450
Alexandria, VA 22313-1450
www.uspto.gov

4/15/11

wk

In re application of	:	
Cebasek et al.	:	DECISION ON
Serial No. 11/980,275	:	PETITION
Filed: October 30, 2007	:	

For: **FLAME AND SMOKE SPREAD RETARDANT MOLDING COMPOUNDS AND COMPONENTS MOLDED FROM THESE COMPOUNDS**

This is a response to withdraw the abandonment of this application and is being considered as a PETITION UNDER RULE 37 C.F.R. 1.181(a) filed April 4, 2011. The petition requests that the abandonment, as set forth in the Notice of Abandonment mailed March 17, 2011, be withdrawn.

On January 27, 2011, Applicants filed a response to the Office Action of August 27, 2010. The response referred to application serial number 11/980,271 rather than 11/980,275. All the other information in the response relevant to identifying the application was correct. Applicants' response of January 27, 2001 is now in the current application

DECISION

The Petition is **GRANTED** as to the withdrawal of abandonment.

/W. GARY JONES/
W. Gary Jones
Director, Technology Center 1700
Chemical and Materials Engineering

HUDAK, SHUNK & FARINE, CO., L.P.A.
2020 FRONT STREET
SUITE 307
CUYAHOGA FALLS OH 44221

UNITED STATES PATENT AND TRADEMARK OFFICE

UNITED STATES DEPARTMENT OF COMMERCE
United States Patent and Trademark Office
Address: COMMISSIONER FOR PATENTS
P.O. Box 1450
Alexandria, Virginia 22313-1450
www.uspto.gov

APPLICATION NO.	FILING DATE	FIRST NAMED INVENTOR	ATTORNEY DOCKET NO.	CONFIRMATION NO.
11/980,281	10/29/2007	James Ralph Heidenreich		9359

67026 7590 03/07/2011
ZXIBIX, INC.
P.O. BOX 759
Mountain View, CA 94042

EXAMINER
STARKS, WILBERT L

ART UNIT	PAPER NUMBER
2129	

MAIL DATE	DELIVERY MODE
03/07/2011	PAPER

Please find below and/or attached an Office communication concerning this application or proceeding.

The time period for reply, if any, is set in the attached communication.

UNITED STATES PATENT AND TRADEMARK OFFICE

Commissioner for Patents
United States Patent and Trademark Office
P.O. Box 1450
Alexandria, VA 22313-1450
www.uspto.gov

ZXIBIX, INC.
P.O. BOX 759
Mountain View CA 94042

In re Application of: James Ralph Heidenreich, et al. Application No. 11/980,281 Filed: October 29, 2007 For: SYSTEM AND METHOD TO FACILITATE USER THINKING ABOUT AN ARBITRARY PROBLEM WITH COLLABORATION OR SOCIAL NETWORKING SYSTEM	)))))))	DECISION ON PETITION FOR SUPERVISORY REVIEW UNDER *37 CFR §1.181*

This is a decision on the petition under 37 CFR § 1.181, filed December 14, 2010, requesting the Examiner to withdraw the finality of the Office action mailed November 10, 2010. The request is treated as a petition to the Director under 37 CFR 1.181 to invoke his supervisory authority and withdraw the finality of the Final Office action. The instant petition(s) also requests notification regarding the acceptance of the amendments to claims filed on August 11, 2010.

The petition is **DISMISSED**.

RECENT PROSECUTION HISTORY

(1) On January 7, 2010, a Non-Final Office action, treating all pending claims, was mailed. In the Office action, claims 1-19 were rejected under 35 USC 102(b) as anticipated by U. S. Patent 6513013 to Stephanou (hereinafter Stephanou).

(4) On July 7, 2010, an amendment and a response were filed by Applicant. The amendment was held noncompliant, and supplemental amendments were subsequently filed on July 27, 2010 and August 11, 2010. The claim amendments filed August 11, 2010 were entered. In the amendment, claims 16-19 were amended to correct their dependency. In addition, claims 3, 6, 9, 12-14 and 17-19 included what Applicant characterized as "very minor" amendments. The Remarks filed July 7, 2010 included arguments presented by Applicant in support of their assertion that examiner had failed to establish a prima facie case of anticipation of claims 1-19 in view of Stephanou's disclosure. Specifically, Applicant listed each claim and specific limitations recited in each claim and provided remarks as to why they believe Stephanou does not anticipate the claimed invention.

(5) On November 10, 2010, a Final Office action, treating all pending claims, was mailed. In the Final Office action, examiner maintained rejection of claims 1-19, addressing each limitation in each claim, including the amendments. In addition, examiner addressed each argument presented by applicant, providing explanation as to why the rejection of claims was being maintained in view of Applicant's remarks.

(6) On December 14, 2010, a request to withdraw the finality of the Final Office action was filed. As noted above, the request is being treated as a petition to the Director under 37 CFR 1.181 to invoke his supervisory authority and withdraw the finality of the Final Office action.

RELIEF REQUESTED

The instant petition filed under 37 CFR 1.181 requests the following relief: A) withdrawal of the finality of the November 10, 2010 office action as prosecution was alleged to have been prematurely closed; and B) notification regarding claim amendments since previous Office Action (namely, amendments filed August 11, 2010) .

In support of the position that the Final rejection was premature, Petitioner asserts that new, different grounds of rejection have been introduced in the Final action that were not necessitated or caused by applicant's amendment or IDS. It is noted that Petitioner acknowledges that the final rejection of claims 1-9 substantially replicates the rejection of the same claims as anticipated by Stephanou made in the previous nonfinal action. However, Petitioner contends that examiner's detailed responses to applicant's arguments (pages 18-59 of the final action) shows new and different ground of rejection s for claim limitations , not just more explanation of the same. Petitioner points to a number of claim limitations that were asserted by applicants as distinguishing the instant claimed invention from Stephanou's disclosure. Further, for each of these limitations, Petitioner points to examiner's response to applicant's arguments and asserts that such responses were not presented in the previous nonfinal action, and thus constitutes new grounds of rejection.

REQUIREMENTS

A petition under 37 CFR §1.181 must include: (1) a statement of facts involved and (2) the point or points to be reviewed and the action requested. Note, the mere filing of a petition will not stay any period for reply that may be running against the application, nor act as a stay of other proceedings. In addition § 1.181(f) sets forth: any petition under this part not filed within two months of the mailing date of the action or notice from which relief is requested may be dismissed as untimely. Further, when a petition is taken from an action or requirement of an examiner in the ex parte prosecution of an application, ... it may be required that there have been a proper request for reconsideration (37 CFR §1.111) and a repeated action by the examiner.

The petition initially filed on December 14, 2010 includes elements (1) and (2) above. The petition was filed within two months of the action from which the relief is requested (Final Office action, mailed November 10, 2010).

ANALYSIS

The relevant section of the MPEP concerning finality of Office practice is MPEP § 706.07. In the language of the MPEP:

> While the rules no longer give to an applicant the right to "amend as often as the examiner presents new references or reasons for rejection," present practice does not sanction hasty and ill-considered final rejections. The applicant who is seeking to define his or her invention in claims that will give him or her the patent protection to which he or she is justly entitled should receive the cooperation of the examiner to that end, and not be prematurely cut off in the prosecution of his or her application. But the applicant who dallies in the prosecution of his or her application, resorting to technical or other obvious subterfuges in order to keep the application pending before the primary examiner, can no longer find a refuge in the rules to ward off a final rejection.
> The examiner should never lose sight of the fact that in every case the applicant is entitled to a full and fair hearing, and that ***a clear issue between applicant and examiner should be developed,*** if possible, before appeal. However, it is to the interest of the applicants as a class as well as to that of the public that prosecution of an application be confined to as few actions as is consistent ***with a thorough consideration of its merits.***
> ***Neither the statutes nor the Rules of Practice confer any right on an applicant to an extended prosecution***; Ex parte Hoogendam, 1939 C.D. 3, 499 O.G.3, 40 USPQ 389 (Comm'r Pat. 1939).
>
> ***In making the final rejection, all outstanding grounds of rejection of record should be carefully reviewed, and any such grounds relied on in the final rejection should be reiterated. They must also be clearly developed to such an extent that applicant may readily judge the advisability of an appeal*** unless a single previous Office action contains a complete statement supporting the rejection.
> However, ***where a single previous Office action contains a complete statement of a ground of rejection, the final rejection may refer to such a statement and also should include a rebuttal of any arguments raised in the applicant's reply.*** If appeal is taken in such a case, the examiner's answer should contain a complete statement of the examiner's position.

Further, as set forth in MPEP 706.07(a):

> Under present practice, ***second or any subsequent actions on the merits shall be final, except where the examiner introduces a new ground of rejection*** that is neither necessitated by applicant's amendment of the claims nor based on information submitted in an information disclosure statement filed during the period set forth in 37 CFR 1.97(c) with the fee set forth in 37 CFR 1.17(p). (emphasis added)

In addition, the relevant sections of MPEP concerning what constitutes new grounds of rejection is MPEP §1207.03, which states in part :

II. SITUATIONS WHERE NEW GROUNDS OF REJECTION ARE NOT PERMISSIBLE

A new ground of rejection would not be permitted to reject a previously allowed or objected to claim even if the new ground of rejection would rely upon evidence already of record. In this instance, rather than making a new ground of rejection in an examiner's answer, if the basis for the new ground of rejection was approved by a supervisory patent examiner as currently set forth in MPEP § 1207.04, the examiner would reopen prosecution. In addition, ***if an appellant has clearly set forth an argument***

in a previous reply during prosecution of the application and the examiner has failed to address that argument, the examiner would not be permitted to add a new ground of rejection in the examiner's answer to respond to that argument but would be permitted to reopen prosecution, if appropriate. (***emphasis added***)

III. SITUATIONS THAT ARE NOT CONSIDERED AS NEW GROUNDS OF REJECTION<

There is no new ground of rejection when the basic thrust of the rejection remains the same such that an appellant has been given a fair opportunity to react to the rejection. See In re Kronig, 539 F.2d 1300, 1302-03, 190 USPQ 425, 426-27 (CCPA 1976). Where the statutory basis for the rejection remains the same, and the evidence relied upon in support of the rejection remains the same, ***a change in the discussion of, or rationale in support of, the rejection does not necessarily constitute a new ground of rejection. Id. at 1303, 190 USPQ at 427*** (***emphasis added***)

With respect to the petition at hand, in the instant application, a comparison of the Non-Final Office action of January 7, 2010 with the Final Office action of November 10, 2010 reveals that the Examiner maintained the same statutory basis of rejection for each of claims 1-19. Specifically, each of claims 1-19 was rejected in both actions under 35 USC 102(b) as being anticipated by Stephanou. It is further noted that in both actions, examiner has provided a thorough analysis of each claim, limitation-by-limitation, mapping each limitation to specific disclosure within the Stephanou reference. In addition, for each claim limitation in each claim, examiner has relied on the same portion of disclosure in the reference in both the nonfinal and the final action. Thus the statutory basis for the rejection remains the same, and the evidence relied upon in support of the rejection remains the same, as required by MPEP §1207.03 (II) above.

Further, upon careful reading of both the Non-Final Office action of January 7, 2010 and the Final Office action of November 10, 2010, it is apparent that the Examiner has fully developed a position on the above identified claims in these Office actions. Further, the position taken by the Examiner has been presented to Applicant in both Office communications including the Final rejection. Specifically, with respect to each of claims 1-19, the Examiner's rejection of these claims is identified clearly in the Non-Final Office action at pages 2-17. In response to applicant's arguments filed July 7, 2010 and supplemental remarks filed July 27 and August 11, 2010, Examiner clearly addressed all arguments presented by the Applicant in the Final action. Specifically, for each pending claim which were not amended but separately argued that the applied references do not teach a feature of the claim(s), the Examiner responded directly (in the Final rejection of December 14, 2010) to Applicant's arguments by pointing out where the argued feature was taught. It is further noted that in the "Response to Arguments " section of the final action, Examiner often provided further clarification on how the claim language and/or the disclosure in the reference is being interpreted. For each of the amended claims, examiner addressed the modified claim limitations in the rejection, and further responded to Applicant's arguments in similar detail as appropriate.

The MPEP does discourage the shifting "from one set of references to another in rejecting in successive actions claims of substantially the same subject matter. However, in the instant application, examiner has relied on the same reference in both the nonfinal and the final actions, and formulated the rejection under the same statute. Thus, contrary to Petitioner's assertion, the application records show that clear issues have been developed.

Each of the "new" explanations provided by Examiner in the final action was in direct response to Applicant's traversal of the anticipation rejection of claims in view of Stephanou made in the previous nonfinal action. In providing further clarification necessitated by Applicant's traversal, Examiner made reference to the same portions of the Stephanou reference as originally cited in the nonfinal action (and repeated in the final Office action). Contrary to Petitioner's assertion, it cannot be seen how further clarifying one's position and responding directly to limitations identified as "not taught by the cited art" could be construed to be "a new line of reasoning" (*In re Kronig,* MPEP 1207.03).

In summary, the Examiner clearly identifies the specific elements in the applied art, which is being relied upon to meet the claim limitations. Furthermore, Applicant's response to the rejections and the arguments presented in this petition delineate issues which have been clearly developed between the Examiner and Applicant. The Examiner has explained his position in detail in the Non-Final action. Applicant has traversed and the Examiner has correspondingly responded to each traversal in a timely manner, addressing all points raised by Applicant in even greater detail in the Final Office action. Differences of opinion are not unexpected in regular examination processes. It is apparent that these issues are now ripe for appeal.

The Examiner's holding of Finality with respect to the rejections of record in the Final Office action mailed November 10, 2010 is correct and in accordance with Office policy and practice. Accordingly the petition to withdraw the finality is **DISMISSED**.

With respect to Petitioner's request for notification of entry/non-entry of the supplemental amendment filed August 11, 2010, it is noted that 37 C.F.R. §1.112 (reproduced in part below) provides for reconsideration of amendments and responses by applicants after nonfinal action, stating that applicant will be notified if claims are rejected, objections or requirements made, or decisions favorable to patentability are made.

§ 1.112 Reconsideration before final action.

After reply by applicant or patent owner (§ 1.111 or § 1.945) to a non-final action and any comments by an inter partes reexamination requester (§ 1.947), the application or the patent under reexamination will be reconsidered and again examined. The applicant, or in the case of a reexamination proceeding the patent owner and any third party requester, will be notified if claims are rejected, objections or requirements made, or decisions favorable to patentability are made, in the same manner as after the first examination (§ 1.104). Applicant or patent owner may reply to such Office action in the same manner provided in § 1.111 or § 1.945, with or without amendment, unless such Office action indicates that it is made final (§ 1.113) or an appeal (§ 41.31 of this title) has been taken (§ 1.116), or in an inter partes reexamination, that it is an action closing prosecution (§ 1.949) or a right of appeal notice (§ 1.953).

There is no specific requirement that the subsequent Office action include a notification that amended claims have been entered (e. g. when claim amendments are in compliance with 37 C.F.R. §1.121). In the instant application, the records show that no notice was sent to applicant regarding noncompliance of the amendments after the aforementioned supplemental amendment was received in the Office. In addition, it is apparent from examiner's final action that each and every amendment made in the reply filed August 11, 2010 has been specifically noted and addressed in the rejection of claims 1-19 and further in the "Response to Arguments" section where appropriate. Therefore it is clear from the record that the claim amendments filed August

11, 2010 have been entered and fully considered by the Examiner, and further notification is not required, nor deemed necessary at this time.

CONCLUSION

For the above stated reasons, the petition to withdraw the finality of the final Office action of November 10, 2010 is **DISMISSED**.

Any inquiries related to this decision may be directed to Kakali Chaki, Quality Assurance Specialist, at (571) 272-3719.

Wendy Garber, Director
Technology Center 2100

UNITED STATES PATENT AND TRADEMARK OFFICE

Commissioner for Patents
United States Patent and Trademark Office
P.O. Box 1450
Alexandria, VA 22313-1450
www.uspto.gov

THE DIAL CORPORATION
19001 N. Scottsdale Road
SCOTTSDALE AZ 85255

MAILED
DEC 06 2011
OFFICE OF PETITIONS

In re Application of
Huynh et al.
Application No 11/980,309
Filed: October 30, 2007
Attorney Docket No. 7191

ON PETITION

This is a decision on the petition under the unintentional provisions of 37 CFR 1.137(b), filed November 10, 2011, to revive the above-identified application.

The petition is **GRANTED**.

The application became abandoned for failure to timely file a reply within the meaning of 37 CFR 1.113 to the final Office action of May 6, 2011. The proposed reply required for consideration of a petition to revive must be a Notice of Appeal (and appeal fee required by 37 CFR 41.20(b)(2), an amendment that *prima facie* places the application in condition for allowance, a Request for Continued Examination and submission (37 CFR 1.114), or the filing of a continuing application under 37 CFR 1.53(b). See MPEP 711.03(c)(III)(A)(2). No extension of time pursuant to the provisions of 37 CFR 1.136(a) was obtained. Accordingly, the date of abandonment of this application is August 7, 2011. A Notice of Abandonment was mailed November 21, 2011.

The petition satisfies the requirements of 37 CFR 1.137(b) in that petitioner has supplied (1) the reply in the form of a Request for Continued Examination (RCE) and fee of $930.00, and the submission required by 37 CFR 1.114; (2) the petition fee of $1860.00; and (3) a proper statement of unintentional delay.

There is no indication that the petition is signed by a registered patent attorney or patent agent of record. However, in accordance with 37 CFR 1.34, the signature of Mr. Pappalardo appearing on the correspondence shall constitute a representation to the United States Patent and Trademark Office that he is authorized to represent the particular party in whose behalf he acts. If, Mr. Pappalardo desires to receive correspondence regarding this file, the appropriate power of attorney documents should be submitted.

Telephone inquiries concerning this decision should be directed to the undersigned at (571) 272-3215.

This application is being referred to Technology Center AU 1619 for processing of the RCE and for appropriate action by the Examiner in the normal course of business on the amendment submitted in accordance with 37 CFR 1.114.

Charlema Grant

Charlema Grant
Attorney Advisor
Office of Petitions

UNITED STATES PATENT AND TRADEMARK OFFICE

UNITED STATES DEPARTMENT OF COMMERCE
United States Patent and Trademark Office
Address: COMMISSIONER FOR PATENTS
P.O. Box 1450
Alexandria, Virginia 22313-1450
www.uspto.gov

APPLICATION NO.	FILING DATE	FIRST NAMED INVENTOR	ATTORNEY DOCKET NO.	CONFIRMATION NO.
11/980,337	10/30/2007	Michael L. Wach	06948.105029 CON2	6907

7590 08/24/2010

Michael L. Wach
4425 Mariners Ridge
Alpharetta, GA 30005

EXAMINER
PETKOVSEK, DANIEL

ART UNIT	PAPER NUMBER
2874	

MAIL DATE	DELIVERY MODE
08/24/2010	PAPER

Please find below and/or attached an Office communication concerning this application or proceeding.

The time period for reply, if any, is set in the attached communication.

UNITED STATES PATENT AND TRADEMARK OFFICE

Commissioner for Patents
United States Patent and Trademark Office
P.O. Box 1450
Alexandria, VA 22313-1450
www.uspto.gov

Michael L. Wach
4425 Mariners Ridge
Alphaxetta, GA 30005

In re Application of: Michael L. Wach et al. Serial No.: 11/980337 Filed: October 30, 2007 Attorney Docket No.: 06948.105029 CON2	: : : : :	DECISION *SUA SPONTE* WITHDRAWING HOLDING OF ABANDONMENT

This is a decision, *sua sponte*, withdrawing the holding of abandonment of the above-identified application.

The application was held abandoned and a Notice of Abandonment was mailed on July 21, 2010 because no reply to the Restriction / Election dated January 11, 2010 had been received.

A review of the record reveals that a Requirement for Restriction/Election Office action was mailed on January 11, 2010. A Response to the Election / Restriction Office Action was filed on July 13, 2010, along with a petition for an extension of time of five months with the requisite fee being paid by the enclosed check. The Response to Election / Restriction Office Action included thereon a Certificate of Mailing dated July 8, 2010. Pursuant to 37 CFR 1.8(a), the Response to Election / Restriction was timely filed; as such, the holding of the instant application as abandoned was improper.

Although no petition or request to withdraw the holding of abandonment in this application has been filed, the Notice of Abandonment is hereby vacated; the holding of abandonment is withdrawn and the application restored to pending status. The application is being forwarded to Examiner for examination in due course.

Any inquiry regarding this decision should be directed to Uyen-Chau N. Le, Supervisory Patent Examiner, at (571) 272-2397.

Richard Seidel, Director
Technology Center 2800
Semiconductors, Electrical and Optical
Systems and Components

UNITED STATES PATENT AND TRADEMARK OFFICE

Commissioner for Patents
United States Patent and Trademark Office
P.O. Box 1450
Alexandria, VA 22313-1450
www.uspto.gov

Decision Date : February 24, 2012

In re Application of :

Thomas La Rosa

DECISION ON PETITION

UNDER CFR 1.313(c)(2)

Application No : 11980366

Filed : 31-Oct-2007

Attorney Docket No : P01732US15/16517.394

This is an electronic decision on the petition under 37 CFR 1.313(c)(2), filed February 24, 2012 , to withdraw the above-identified application from issue after payment of the issue fee.

The petition is **GRANTED.**

The above-identified application is withdrawn from issue for consideration of a submission under 37 CFR 1.114 (request for continued examination). See 37 CFR 1.313(c)(2).

Petitioner is advised that the issue fee paid in this application cannot be refunded. If, however, this application is again allowed, petitioner may request that it be applied towards the issue fee required by the new Notice of Allowance.

Telephone inquiries concerning this decision should be directed to the Patent Electronic Business Center (EBC) at 866-217-9197.

This application file is being referred to Technology Center AU 1638 for processing of the request for continuing examination under 37 CFR 1.114 .

Office of Petitions

Doc Code: PET.AUTO Document Description: Petition automatically granted by EFS-Web	PTO/SB/140 U.S. Patent and Trademark Office Department of Commerce

Electronic Petition Request	**PETITION TO WITHDRAW AN APPLICATION FROM ISSUE AFTER PAYMENT OF THE ISSUE FEE UNDER 37 CFR 1.313(c)**
Application Number	11980366
Filing Date	31-Oct-2007
First Named Inventor	Thomas La Rosa
Art Unit	1638
Examiner Name	PHUONG BUI
Attorney Docket Number	P01732US15/16517.394
Title	NUCLEIC ACID MOLECULES AND OTHER MOLECULES ASSOCIATED WITH PLANTS AND USES THEREOF FOR PLANT IMPROVEMENT

An application may be withdrawn from issue for further action upon petition by the applicant. To request that the Office withdraw an application from issue, applicant must file a petition under this section including the fee set forth in § 1.17(h) and a showing of good and sufficient reasons why withdrawal of the application from issue is necessary.

APPLICANT HEREBY PETITIONS TO WITHDRAW THIS APPLICATION FROM ISSUE UNDER 37 CFR 1.313(c).

A grantable petition requires the following items:
(1) Petition fee; and
(2) One of the following reasons:
(a) Unpatentability of one or more claims, which must be accompanied by an unequivocal statement that one or more claims are unpatentable, an amendment to such claim or claims, and an explanation as to how the amendment causes such claim or claims to be patentable;
(b) Consideration of a request for continued examination in compliance with § 1.114 (for a utility or plant application only); or
(c) Express abandonment of the application. Such express abandonment may be in favor of a continuing application, but not a CPA under 37 CFR 1.53(d).

Petition Fee

☐ Applicant claims SMALL ENTITY status. See 37 CFR 1.27.

☐ Applicant is no longer claiming SMALL ENTITY status. See 37 CFR 1.27(g)(2).

☐ Applicant(s) status remains as SMALL ENTITY.

☒ Applicant(s) status remains as other than SMALL ENTITY

Reason for withdrawal from issue

○ One or more claims are unpatentable

◉ Consideration of a request for continued examination (RCE) (List of Required Documents and Fees)

○ Applicant hereby expressly abandons the instant application (any attorney/agent signing for this reason must have power of attorney pursuant to 37 CFR 1.32(b)).

RCE request,submission, and fee.

☐ I certify, in accordance with 37 CFR 1.4(d)(4) that : The RCE request ,submission, and fee have already been filed in the above-identified application on

☒ Are attached.

THIS PORTION MUST BE COMPLETED BY THE SIGNATORY OR SIGNATORIES

I certify, in accordance with 37 CFR 1.4(d)(4) that I am:

○ An attorney or agent registered to practice before the Patent and Trademark Office who has been given power of attorney in this application.

◉ An attorney or agent registered to practice before the Patent and Trademark Office, acting in a representative capacity.

○ A sole inventor

○ A joint inventor; I certify that I am authorized to sign this submission on behalf of all of the inventors

○ A joint inventor; all of whom are signing this e-petition

○ The assignee of record of the entire interest that has properly made itself of record pursuant to 37 CFR 3.71

Signature	/Xianfeng Xu/
Name	Xianfeng Xu
Registration Number	68376

UNITED STATES PATENT AND TRADEMARK OFFICE

UNITED STATES DEPARTMENT OF COMMERCE
United States Patent and Trademark Office
Address: COMMISSIONER FOR PATENTS
P.O. Box 1450
Alexandria, Virginia 22313-1450
www.uspto.gov

APPLICATION NO.	FILING DATE	FIRST NAMED INVENTOR	ATTORNEY DOCKET NO.	CONFIRMATION NO.
11/980,375	10/31/2007	Yoshimi Isu	1163-0270PUS6	7075

2292 7590 11/23/2010
BIRCH STEWART KOLASCH & BIRCH
PO BOX 747
FALLS CHURCH, VA 22040-0747

EXAMINER
BANKS HAROLD, MARSHA DENISE

ART UNIT	PAPER NUMBER
2482	

NOTIFICATION DATE	DELIVERY MODE
11/23/2010	ELECTRONIC

Please find below and/or attached an Office communication concerning this application or proceeding.

The time period for reply, if any, is set in the attached communication.

Notice of the Office communication was sent electronically on above-indicated "Notification Date" to the following e-mail address(es):

mailroom@bskb.com

UNITED STATES PATENT AND TRADEMARK OFFICE

Commissioner for Patents
United States Patent and Trademark Office
P.O. Box 1450
Alexandria, VA 22313-1450
www.uspto.gov

MAILED

NOV 23 2010

DIRECTOR OFFICE
TECHNOLOGY CENTER 2400

BIRCH STEWART KOLASCH & BIRCH
PO BOX 747
FALLS CHURCH, VA 22040-0747

In re Application of	:	
ISU, YOSHIMI et al	:	DECISION ON REQUEST TO
Application No. 11/980,375	:	PARTICIPATE IN PATENT
Filed: October 31, 2007	:	PROSECUTION HIGHWAY
Attorney Docket No. **1163-0270PUS6**	:	PILOT PROGRAM AND PETITION
	:	TO MAKE SPECIAL UNDER
	:	37 CFR 1.102(d)

This is a decision on the request to participate in the Patent Prosecution Highway (PPH) pilot program and the petition under 37 CFR 1.102(d), filed August 26, 2010.

The request and petition are **GRANTED**.

A grantable request to participate in the PPH pilot program and petition to make special require:

(1) The U.S. application must validly claim priority under 35 U.S.C. 119(a) to one or more applications filed in the EPO or validly claims benefit under 35 U.S.C. 120 to a PCT application;
(2) Applicant must submit a copy of the allowable/patentable claim(s) from the EPO application(s);
(3) All the claims in the U.S. application must sufficiently correspond or be amended to sufficiently correspond to the allowable/patentable claim(s) in the EPO application(s);
(4) Examination of the U.S. application has not begun;
(5) Applicant must submit a copy of all the office actions from each of the EPO application(s) containing the allowable/patentable claim(s);
(6) Applicant must submit an IDS listing the documents cited by the EPO examiner in the EPO office action along with copies of documents except U.S. patents or U.S. patent application publications; and

The request to participate in the PPH pilot program and petition comply with the above requirements. Accordingly, the above-identified application has been accorded "special" status.

Telephone inquiries concerning this decision should be directed to Mehrdad Dastouri at 571-272-7418.

All other inquiries concerning the examination or status of the application should be directed to Patent Application Information Retrieval (PAIR) system.

/Mehrdad Dastouri/

Mehrdad Dastouri
Quality Assurance Specialist
Technology Center 2400

UNITED STATES PATENT AND TRADEMARK OFFICE

UNITED STATES DEPARTMENT OF COMMERCE
United States Patent and Trademark Office
Address: COMMISSIONER FOR PATENTS
P.O. Box 1450
Alexandria, Virginia 22313-1450
www.uspto.gov

APPLICATION NO.	FILING DATE	FIRST NAMED INVENTOR	ATTORNEY DOCKET NO.	CONFIRMATION NO.
11/980,391	10/31/2007	Yonpyo Hon	2392.1128	5419

21171 7590 11/22/2010
STAAS & HALSEY LLP
SUITE 700
1201 NEW YORK AVENUE, N.W.
WASHINGTON, DC 20005

EXAMINER
CADUGAN, ERICA E

ART UNIT	PAPER NUMBER
3726	

MAIL DATE	DELIVERY MODE
11/22/2010	PAPER

Please find below and/or attached an Office communication concerning this application or proceeding.

The time period for reply, if any, is set in the attached communication.

UNITED STATES PATENT AND TRADEMARK OFFICE

Commissioner for Patents
United States Patent and Trademark Office
P.O. Box 1450
Alexandria, VA 22313-1450
www.uspto.gov

STAAS & HALSEY LLP
SUITE 700
1201 NEW YORK AVENUE, N.W.
WASHINGTON DC 20005

In re Application of	:	
HON, YONPYO et al	:	DECISION ON REQUEST TO
Application No. 11/980,391	:	PARTICIPATE IN PATENT
Filed: Oct. 31, 2007	:	PCT/PROSECUTION HIGHWAY
Attorney Docket No. 2392.1128	:	PROGRAM AND PETITION
For: MACHINE TOOL HAVING FUNCTION OF DETECTING CONTACT BETWEEN TOOL AND WORKPIECE	:	37 CFR 1.102(d)

This is a decision on the request to participate in the Patent Prosecution Highway (PPH) program and the petition under 37 CFR 1.102(d), filed November 19, 2010, to make the above-identified application special.

The request and petition are granted.

A grantable request to participate in the PPH pilot program and petition to make special require:

(1) The U.S. application must validly claim priority under 35 U.S.C. 119(a) to one or more applications filed in the JPO;
(2) Applicant must submit a copy of the allowable/patentable claim(s) from the JPO/PCT application(s) along with an English translation thereof and a statement that the English translation is accurate;
(3) All the claims in the U.S. application must sufficiently correspond or be amended to sufficiently correspond to the allowable/patentable claim(s) in the JPO application(s);
(4) Examination of the U.S. application has not begun;
(5) Applicant must submit a copy of all the office actions from each of the JPO/PCT application(s) containing the allowable/patentable claim(s) along with an English translation thereof and a statement that the English translation is accurate; and
(6) Applicant must submit an IDS listing the documents cited by the JPO examiner in the JPO office action along with copies of documents except U.S. patents or U.S. patent application publications.

In light of the petition being properly submitted, the request to participate in the PPH program and the petition comply with the above requirements. Accordingly, the above-identified application has been accorded "special" status.

The applicant is encouraged to cite and submit all relevant prior art references, if any, to facilitate examination in this application. This application will be forwarded to an examiner for examination.

Telephone inquiries concerning this decision should be directed to Henry C. Yuen at 571-272-4856. All other inquiries concerning the examination or status of the application should be directed to David Bryant, SPE of Art Unit 3726, and 571-272-4526 for Class 409/292 and also accessible in the PAIR system at http://www.uspto.gov/ebc.index.html.

Petition is **granted**.

/Henry C. Yuen/

Henry C. Yuen, Special Programs Examiner
Technology Center 3700 – Mechanical Engineering,
Manufacturing and Products
571-272-4856

UNITED STATES PATENT AND TRADEMARK OFFICE

Commissioner for Patents
United States Patent and Trademark Office
P.O. Box 1450
Alexandria, VA 22313-1450
www.uspto.gov

Avery Dennison Corporation
Amanda Wittine
8080 Norton Parkway
22-D
Mentor, OH 44060

MAILED
APR 29 2011
OFFICE OF PETITIONS

In re Application of	:	
Clifford Russell Brockman	:	
Application No. 11/980,416	:	DECISION ON PETITION
Filed: October 31, 2007	:	
Attorney Docket No. 4358-US	:	

This is a decision on the petition under the unintentional provisions of 37 CFR 1.137(b), filed March 30, 2011, to revive the above-identified application.

The application became abandoned for failure to file a timely reply to the Notice of Allowance and Fee(s) Due (Notice) mailed on December 22, 2010.

The petition satisfies the requirements of 37 CFR 1.137(b) in that petitioner has supplied (1) the reply in the form of $1,510 for payment of the issue fee and $300 for payment of the publication fee; (2) the petition fee of $1,620; and (3) a proper statement of unintentional delay. Therefore, the petition is **GRANTED**.

This application file is being referred to the Office of Data Management for further processing into a patent.

Telephone inquiries concerning this decision should be directed to the undersigned at (571) 272-3226.

Andrea Smith
Petitions Examiner
Office of Petitions

SPE RESPONSE FOR CERTIFICATE OF CORRECTION

Paper No.: _____

DATE : 2/7/11

TO SPE OF : ART UNIT: 3661 Attn: BLACK THOMAS G (SPE)

SUBJECT : Request for Certificate of Correction for Appl. No.: 11/980465 Patent No.: 7848886

CofC Mailroom date: 01/27/11

Please respond to this request for a certificate of correction within 7 days.

FOR IFW FILES:

Please review the requested changes/corrections as shown in the **COCIN** document(s) in the IFW application image. No new matter should be introduced, nor should the scope or meaning of the claims be changed.

Please complete the response (see below) and forward the completed response to scanning using document code **COCX**.

FOR PAPER FILES:

Please review the requested changes/corrections as shown in the attached certificate of correction. Please complete this form (see below) and forward it with the file to:

Certificates of Correction Branch (CofC)
Randolph Square – 9D10-A
Palm Location 7580

Tasneem Siddiqui
Certificates of Correction Branch
703-756-1593 or 703-756-1814

Thank You For Your Assistance

The request for issuing the above-identified correction(s) is hereby:
Note your decision on the appropriate box.

- ☐ **Approved** — **All** changes apply.
- ☐ **Approved in Part** — Specify below which changes **do not** apply.
- ☐ **Denied** — State the reasons for denial below.

Comments: _____

/Thomas G. Black/ 3661
SPE **Art Unit**

UNITED STATES PATENT AND TRADEMARK OFFICE

Commissioner for Patents
United States Patent and Trademark Office
P.O. Box 1450
Alexandria, VA 22313-1450
www.uspto.gov

BIRCH STEWART KOLASCH & BIRCH
PO BOX 747
FALLS CHURCH VA 22040-0747

MAILED
DEC 06 2010
OFFICE OF PETITIONS

In re Application of	:	
James Chu et al.	:	DECISION ON PETITION
Application No. 11/980,468	:	TO WITHDRAW
Filed: October 31, 2007	:	FROM RECORD
Attorney Docket No. **4989-0163PUS1**	:	

This is a decision on the request to withdraw as attorney of record under 37 CFR § 1.36, filed November 23, 2010.

The request is **APPROVED**.

A grantable request to withdraw as attorney/agent of record must be signed by every attorney/agent seeking to withdraw or contain a clear indication that one attorney is signing on behalf of another/others. The Office requires the practitioner(s) requesting withdrawal to certify that he, she, or they have: (1) given reasonable notice to the client, prior to the expiration of the response period, that the practitioner(s) intends to withdraw from employment; (2) delivered to the client or a duly authorized representative of the client all papers and property (including funds) to which the client is entitled; and (3) notified the client of any responses that may be due and the time frame within which the client must respond , pursuant to 37 CFR 10.40.

The request was signed by Gerald M. Murphy, Jr. on behalf of all attorneys of record who are associated with Customer Number 02292.

All attorneys/agents associated with Customer Number 02292 have been withdrawn.

Applicant is reminded that there is no attorney of record at this time.

The correspondence address of record has been changed and all future correspondence will be directed to the first named inventor Yuang-Cheng Chung at the address indicated below.

There is an outstanding Office action mailed November 17, 2010, that requires a reply from the applicant.

Telephone inquiries concerning this decision should be directed to the undersigned at 571-272-4584.

/JoAnne Burke/
JoAnne Burke
Petitions Examiner
Office of Petitions

cc: James Chu
9F, No. 192, Liancheng Road
Zhonghe City, Taipei County 235, Taiwan, (R.O.C.)

UNITED STATES PATENT AND TRADEMARK OFFICE

UNITED STATES DEPARTMENT OF COMMERCE
United States Patent and Trademark Office
Address: COMMISSIONER FOR PATENTS
P.O. Box 1450
Alexandria, Virginia 22313-1450
www.uspto.gov

APPLICATION NO.	FILING DATE	FIRST NAMED INVENTOR	ATTORNEY DOCKET NO.	CONFIRMATION NO.
11/980,477	10/31/2007	Yoshimi Isu	1163-0270PUS9	9297

2292 7590 11/24/2010
BIRCH STEWART KOLASCH & BIRCH
PO BOX 747
FALLS CHURCH, VA 22040-0747

EXAMINER
BANKS HAROLD, MARSHA DENISE

ART UNIT	PAPER NUMBER
2482	

NOTIFICATION DATE	DELIVERY MODE
11/24/2010	ELECTRONIC

Please find below and/or attached an Office communication concerning this application or proceeding.

The time period for reply, if any, is set in the attached communication.

Notice of the Office communication was sent electronically on above-indicated "Notification Date" to the following e-mail address(es):

mailroom@bskb.com

UNITED STATES PATENT AND TRADEMARK OFFICE

Commissioner for Patents
United States Patent and Trademark Office
P.O. Box 1450
Alexandria, VA 22313-1450
www.uspto.gov

MAILED

NOV 24 2010

DIRECTOR OFFICE
TECHNOLOGY CENTER 2400

BIRCH STEWART KOLASCH & BIRCH
PO BOX 747
FALLS CHURCH, VA 22040-0747

In re Application of	:	
ISU, YOSHIMI et al	:	DECISION ON REQUEST TO
Application No. 11/980,477	:	PARTICIPATE IN PATENT
Filed: October 31, 2007	:	PROSECUTION HIGHWAY
Attorney Docket No. **1163-0270PUS9**	:	PILOT PROGRAM AND PETITION
	:	TO MAKE SPECIAL UNDER
	:	37 CFR 1.102(d)

This is a decision on the request to participate in the Patent Prosecution Highway (PPH) pilot program and the petition under 37 CFR 1.102(d), filed September 8, 2010.

The request and petition are **GRANTED**.

A grantable request to participate in the PPH pilot program and petition to make special require:

(1) The U.S. application must validly claim priority under 35 U.S.C. 119(a) to one or more applications filed in the EPO or validly claims benefit under 35 U.S.C. 120 to a PCT application;
(2) Applicant must submit a copy of the allowable/patentable claim(s) from the EPO application(s);
(3) All the claims in the U.S. application must sufficiently correspond or be amended to sufficiently correspond to the allowable/patentable claim(s) in the EPO application(s);
(4) Examination of the U.S. application has not begun;
(5) Applicant must submit a copy of all the office actions from each of the EPO application(s) containing the allowable/patentable claim(s);
(6) Applicant must submit an IDS listing the documents cited by the EPO examiner in the EPO office action along with copies of documents except U.S. patents or U.S. patent application publications; and

The request to participate in the PPH pilot program and petition comply with the above requirements. Accordingly, the above-identified application has been accorded "special" status.

Telephone inquiries concerning this decision should be directed to Mehrdad Dastouri at 571-272-7418.

All other inquiries concerning the examination or status of the application should be directed to Patent Application Information Retrieval (PAIR) system.

/Mehrdad Dastouri/

Mehrdad Dastouri
Quality Assurance Specialist
Technology Center 2400

UNITED STATES PATENT AND TRADEMARK OFFICE

UNITED STATES DEPARTMENT OF COMMERCE
United States Patent and Trademark Office
Address: COMMISSIONER FOR PATENTS
P.O. Box 1450
Alexandria, Virginia 22313-1450
www.uspto.gov

APPLICATION NO.	FILING DATE	FIRST NAMED INVENTOR	ATTORNEY DOCKET NO.	CONFIRMATION NO.
11/980,493	10/31/2007	Yoshimi Isu	1163-0270PUS5	6592

2292 7590 06/10/2011
BIRCH STEWART KOLASCH & BIRCH
PO BOX 747
FALLS CHURCH, VA 22040-0747

EXAMINER
VO, TUNG T

ART UNIT	PAPER NUMBER
2486	

NOTIFICATION DATE	DELIVERY MODE
06/10/2011	ELECTRONIC

Please find below and/or attached an Office communication concerning this application or proceeding.

The time period for reply, if any, is set in the attached communication.

Notice of the Office communication was sent electronically on above-indicated "Notification Date" to the following e-mail address(es):

mailroom@bskb.com

UNITED STATES PATENT AND TRADEMARK OFFICE

MAILED

JUN 10 2011

DIRECTOR OFFICE
TECHNOLOGY CENTER 2400

Commissioner for Patents
United States Patent and Trademark Office
P.O. Box 1450
Alexandria, VA 22313-1450
www.uspto.gov

BIRCH STEWART KOLASCH & BIRCH
PO BOX 747
FALLS CHURCH VA 22040-0747

In re Application of: ISU, Yoshimi et. al.
Application No. **11/980,493**
Filed: October 31, 2007
Atty Docket No. 1163-0270PUS5
For: IMAGE DECODING APPARATUS

DECISION ON REQUEST TO PARTICIPATE IN PATENT PROSECUTION HIGHWAY PROGRAM AND PETITION TO MAKE SPECIAL UNDER 37 CFR 1.102(d)

This is a decision on the request to participate in the Patent Prosecution Highway (PPH) program and the petition under 37 CFR §1.102(d), filed **August 26, 2010**, to make the above-identified application special.

The petition is **DISMISSED.**

A grantable request to participate in the PPH program and petition to make special require:

(1) The U.S. application is
(a) a Paris Convention application which either (i) validly claims priority under 35 U.S.C. 119(a) and 37 CFR 1.55 to one or more applications filed in the JPO, or (ii) validly claims priority to a PCT application that contains no priority claims, or
(b) a national stage application under the PCT (an application which entered the national stage in the U.S. from a PCT international application after compliance with 35 U.S.C. 371), which PCT application (i) validly claims priority to an application filed in the JPO, or (ii) validly claims priority to a PCT application that contains no priority claims, or (iii) contains no priority claim, or
(c) a so-called bypass application filed under 35 U.S.C. 111 (a) which validly claims benefit under 35 U.S.C. 120 to a PCT application, which PCT application (i) validly claims priority to an application filed in the JPO, or (ii) validly claims priority to a PCT application that contains no priority claims, or (iii) contains no priority claim.

Where the JPO application that contains the allowable/patentable claims is not the same application for which priority is claimed in the U.S. application, applicant must identify the relationship between the JPO application that contains the allowable/patentable claims and the JPO priority application claimed in the U.S. application;

(2) Applicant must submit a copy of:
a. The allowable/patentable claim(s) from the Japanese application(s);

b. An English translation of the allowable/patentable claim(s), if the claims were published in a language other than English); and
c. A statement that the English translation is accurate;

(3) Applicant must:
a. Ensure that all the claims in the U.S. application sufficiently correspond or be amended to sufficiently correspond to the allowable/patentable claim(s) in the JPO application(s) and
b. Submit a claim correspondence table in English;

(4) Examination of the U.S. application has not begun;

(5) Applicant must submit:
a. A copy of all the office action(s) (which are relevant to patentability), excluding "Decision to Grant a Patent" from each of the Japanese application(s) containing the allowable/patentable claim(s);
b. An English language translation of the JPO office action(s) (if the office action(s) are not in the English language); and
c. A statement that the English translation is accurate;

(6) Applicant must submit:
a. An IDS listing the documents cited by the JPO examiner in the JPO office action (unless already filed in this application); and
b. Copies of all the documents cited in the JPO office action, except U.S. patents or U.S. patent application publications (unless already filed in this application); and

(7) The required petition fee under 37 CFR 1.17(h).

The request to participate in the PPH program and petition failed to meet the requirement of items (6) above. More specifically, (6) Applicant must submit an information disclosure statement (IDS) listing the documents cited by the EPO examiner in the EPO Office action or in the positive Extended European Search Report (EESR) (unless such an IDS has already been filed in the U.S. application). Applicant must submit copies of all the documents cited in the EPO Office action or in the positive EESR (unless the copies have already been filed in the U.S. application) except U.S. patents or U.S. patent application publications. In this case, Applicant submitted an (IDS) (filed 10/31/07) listing the documents cited by the EPO Search Report (i.e. cited no. BB JP 9-139937-A), however, it appears that **no** copy of this document has been provided and/or there is **no** copy of this document in the Image File Wrapper (IFW).

Accordingly, the Petition is **DISMISSED**.

Applicant is given a time period of ONE MONTH or THIRTY DAYS, whichever is longer, to correct the deficiencies. NO EXTENSION OF TIME UNDER 37 CFR 1.136 IS PERMITTED.

If the deficiencies are not corrected with the time period given, the application will await action in its regular turn. Responses must be submitted by EFS-Web using the document description "Petition to make special under Patent Prosecution Highway (PPH) program.

Telephone inquiries concerning this decision should be directed to Beatriz Prieto at 571-272-3902. All other inquiries concerning the examination or status of the application is accessible in the PAIR system at http://www.uspto.gov/ebc/index.html.

/Beatriz Prieto/

Beatriz Prieto
Quality Assurance Specialist
Technology Center 2400

UNITED STATES PATENT AND TRADEMARK OFFICE

UNITED STATES DEPARTMENT OF COMMERCE
United States Patent and Trademark Office
Address: COMMISSIONER FOR PATENTS
P.O. Box 1450
Alexandria, Virginia 22313-1450
www.uspto.gov

APPLICATION NO.	FILING DATE	FIRST NAMED INVENTOR	ATTORNEY DOCKET NO.	CONFIRMATION NO.
11/980,493	10/31/2007	Yoshimi Isu	1163-0270PUS5	6592

2292 7590 06/27/2011
BIRCH STEWART KOLASCH & BIRCH
PO BOX 747
FALLS CHURCH, VA 22040-0747

EXAMINER
VO, TUNG T

ART UNIT	PAPER NUMBER
2486	

NOTIFICATION DATE	DELIVERY MODE
06/27/2011	ELECTRONIC

Please find below and/or attached an Office communication concerning this application or proceeding.

The time period for reply, if any, is set in the attached communication.

Notice of the Office communication was sent electronically on above-indicated "Notification Date" to the following e-mail address(es):

mailroom@bskb.com

UNITED STATES PATENT AND TRADEMARK OFFICE

MAILED

JUN 24 2011

DIRECTOR OFFICE
TECHNOLOGY CENTER 2400

Commissioner for Patents
United States Patent and Trademark Office
P.O. Box 1450
Alexandria, VA 22313-1450
www.uspto.gov

BIRCH STEWART KOLASCH & BIRCH
PO BOX 747
FALLS CHURCH VA 22040-0747

In re Application of: ISU, Yoshimi et. al.
Application No. **11/980,493**
Filed: October 31, 2007
Atty Docket No. 1163-0270PUS5
For: IMAGE DECODING APPARATUS

DECISION ON REQUEST TO PARTICIPATE IN PATENT PROSECUTION HIGHWAY PROGRAM AND PETITION TO MAKE SPECIAL UNDER 37 CFR 1.102(d)

This is a decision on renew request to participate in the Patent Prosecution Highway (PPH) program and the petition under 37 CFR §1.102(d), filed **June 20, 2011**, to make the above-identified application special.

The petition is **GRANTED.**

A grantable request to participate in the PPH program and petition to make special require:

(1) The U.S. application is
(a) a Paris Convention application which either (i) validly claims priority under 35 U.S.C. 119(a) and 37 CFR 1.55 to one or more applications filed in the JPO, or (ii) validly claims priority to a PCT application that contains no priority claims, or
(b) a national stage application under the PCT (an application which entered the national stage in the U.S. from a PCT international application after compliance with 35 U.S.C. 371), which PCT application (i) validly claims priority to an application filed in the JPO, or (ii) validly claims priority to a PCT application that contains no priority claims, or (iii) contains no priority claim, or
(c) a so-called bypass application filed under 35 U.S.C. 111 (a) which validly claims benefit under 35 U.S.C. 120 to a PCT application, which PCT application (i) validly claims priority to an application filed in the JPO, or (ii) validly claims priority to a PCT application that contains no priority claims, or (iii) contains no priority claim.

Where the JPO application that contains the allowable/patentable claims is not the same application for which priority is claimed in the U.S. application, applicant must identify the relationship between the JPO application that contains the allowable/patentable claims and the JPO priority application claimed in the U.S. application;

(2) Applicant must submit a copy of:
a. The allowable/patentable claim(s) from the Japanese application(s);

b. An English translation of the allowable/patentable claim(s), if the claims were published in a language other than English); and
c. A statement that the English translation is accurate;

(3) Applicant must:
a. Ensure that all the claims in the U.S. application sufficiently correspond or be amended to sufficiently correspond to the allowable/patentable claim(s) in the JPO application(s) and
b. Submit a claim correspondence table in English;

(4) Examination of the U.S. application has not begun;

(5) Applicant must submit:
a. A copy of all the office action(s) (which are relevant to patentability), excluding "Decision to Grant a Patent" from each of the Japanese application(s) containing the allowable/patentable claim(s);
b. An English language translation of the JPO office action(s) (if the office action(s) are not in the English language); and
c. A statement that the English translation is accurate;

(6) Applicant must submit:
a. An IDS listing the documents cited by the JPO examiner in the JPO office action (unless already filed in this application); and
b. Copies of all the documents cited in the JPO office action, except U.S. patents or U.S. patent application publications (unless already filed in this application).

The request to participate in the PPH program and petition are found to comply with all the above requirements. Accordingly, the above-identified application has been accorded "special" status.

Telephone inquiries concerning this decision should be directed to Beatriz Prieto at 571-272-3902. All other inquiries concerning the examination or status of the application is accessible in the PAIR system at http://www.uspto.gov/ebc/index.html.

The application is being forwarded to the examiner for action on the merits commensurate with this decision.

/Beatriz Prieto/

Beatriz Prieto
Quality Assurance Specialist
Technology Center 2400

UNITED STATES PATENT AND TRADEMARK OFFICE

Commissioner for Patents
United States Patent and Trademark Office
P.O. Box 1450
Alexandria, VA 22313-1450
www.uspto.gov

BIRCH STEWART KOLASCH & BIRCH
PO BOX 747
FALLS CHURCH VA 22040-0747

MAILED

FEB 28 2011

OFFICE OF PETITIONS

In re Application of	:	
CHU, et al	:	
Application No. 11/980,508	:	DECISION ON PETITION
Filed: October 31, 2007	:	TO WITHDRAW
Attorney Docket No. 4989-0164PUS1	:	FROM RECORD
	:	

This is a decision on the Request to Withdraw as attorney or agent under 37 C.F.R. § 1.36(b) filed January 3, 2011.

The request is **APPROVED**.

A grantable request to withdraw as attorney/agent of record must be signed by every attorney/agent seeking to withdraw or contain a clear indication that one attorney is signing on behalf of another/others. The Office requires the practitioner(s) requesting withdrawal to certify that he, she, or they have: (1) given reasonable notice to the client, prior to the expiration of the response period, that the practitioner(s) intends to withdraw from employment; (2) delivered to the client or a duly authorized representative of the client all papers and property (including funds) to which the client is entitled; and (3) notified the client of any responses that may be due and the time frame within which the client must respond, pursuant 37 CFR 10.40(c).

The request was signed by Gerald M. Murphy, Jr. on behalf of the attorneys of record associated with Customer No. 02292.

The attorneys of record associated with Customer No. 02292 have withdrawn.

Applicant is reminded that there is no attorney of record at this time.

The correspondence address of record has been changed and the new correspondence address is the address indicated below until otherwise properly notified.

Telephone inquires concerning this decision should be directed to the undersigned at (571) 272-6735.

/Diane C. Goodwyn/
Diane C. Goodwyn
Petitions Examiner
Office of Petitions

cc: JAMES CHU
9F., NO. 192, LIANCHENG RD.
ZHONGHE CITY TAIPEI COUNTY 235
TAIWAN, R.O.C.

UNITED STATES PATENT AND TRADEMARK OFFICE

UNITED STATES DEPARTMENT OF COMMERCE
United States Patent and Trademark Office
Address: COMMISSIONER FOR PATENTS
P.O. Box 1450
Alexandria, Virginia 22313-1450
www.uspto.gov

APPLICATION NUMBER	FILING OR 371(C) DATE	FIRST NAMED APPLICANT	ATTY. DOCKET NO./TITLE
11/980,508	10/31/2007	James Chu	4989-0164PUS1

CONFIRMATION NO. 5416

POWER OF ATTORNEY NOTICE

2292
BIRCH STEWART KOLASCH & BIRCH
PO BOX 747
FALLS CHURCH, VA 22040-0747

OC000000046219571

Date Mailed: 02/28/2011

NOTICE REGARDING CHANGE OF POWER OF ATTORNEY

This is in response to the Power of Attorney filed 01/03/2011.

- The withdrawal as attorney in this application has been accepted. Future correspondence will be mailed to the new address of record. 37 CFR 1.33.

/dcgoodwyn/

Office of Data Management, Application Assistance Unit (571) 272-4000, or (571) 272-4200, or 1-888-786-0101

UNITED STATES PATENT AND TRADEMARK OFFICE

UNITED STATES DEPARTMENT OF COMMERCE
United States Patent and Trademark Office
Address: COMMISSIONER FOR PATENTS
P.O. Box 1450
Alexandria, Virginia 22313-1450
www.uspto.gov

APPLICATION NO.	FILING DATE	FIRST NAMED INVENTOR	ATTORNEY DOCKET NO.	CONFIRMATION NO.
11/980,658	10/31/2007	Mitsunori Takanashi	298621/06	6883

7590 03/10/2011
MCGINN INTELLECTUAL PROPERTY LAW GROUP, PLLC
8321 OLD COURTHOUSE ROAD
SUITE 200
VIENNA, VA 22182-3817

EXAMINER
LOUIS JACQUES, JACQUES H

ART UNIT	PAPER NUMBER
2100	

MAIL DATE	DELIVERY MODE
03/10/2011	PAPER

DECISION GRANTING PETITION UNDER 37 CFR 1.138(d)

The declaration of express abandonment is recognized

This is in response to the petition under 37 CFR 1.138(d), requesting for a refund of any previously paid search fee and excess claims fee in the above-identified application.

The petition is granted.

The express abandonment is recognized. Any previously paid search fee and excess claims fee are hereby refunded.

Telephone inquiries should be directed to the Office of Data Management at (571) 272-4200.

Patent Publication Branch
Office of Data Management

UNITED STATES PATENT AND TRADEMARK OFFICE

UNITED STATES DEPARTMENT OF COMMERCE
United States Patent and Trademark Office
Address: COMMISSIONER FOR PATENTS
P.O. Box 1450
Alexandria, Virginia 22313-1450
www.uspto.gov

APPLICATION NO.	FILING DATE	FIRST NAMED INVENTOR	ATTORNEY DOCKET NO.	CONFIRMATION NO.
11/980,668	10/31/2007	John J. Stuppy	29239-204478	7904

26694 7590 03/11/2011
VENABLE LLP
P.O. BOX 34385
WASHINGTON, DC 20043-9998

EXAMINER
FRISBY, KESHA

ART UNIT	PAPER NUMBER
3715	

MAIL DATE	DELIVERY MODE
03/11/2011	PAPER

Please find below and/or attached an Office communication concerning this application or proceeding.

The time period for reply, if any, is set in the attached communication.

UNITED STATES PATENT AND TRADEMARK OFFICE

Commissioner for Patents
United States Patent and Trademark Office
P.O. Box 1450
Alexandria, VA 22313-1450
www.uspto.gov

VENABLE LLP
P.O. BOX 34385
WASHINGTON DC 20043-9998

In re Application of:
STUPPY, JOHN J.
Serial No.: 11/980,668
Filed: Oct. 31, 2007
Attorney Docket: 29239-204478
Title: SYSTEM AND METHOD FOR ADMINISTERING LEARNING SESSION OVER A NETWORK

DECISION ON PETITION TO RESCIND DOUBLE PATENTING REJECTION

This is a decision on the petition filed on July 8, 2010 by which petitioner requests review of the formal sufficiency and propriety of the Rule 131 Affidavit of March 19, 2010 filed under Rule 116 after final rejection. Petitioner also requests that Rule 131 Affidavit be entered for appeal purpose because the Advisory Action mailed on May 11, 2010 was improper. The petition is being considered pursuant to 37 CFR 1.181 and no fee therefore is required.

The petition is **DISMISSED as moot**.

This application comes before the Technology Center Director for review of the office letter (Advisory Action) of May 11, 2010. Petitioner opines that the examiner's refusal to enter the Rule 131 Affidavit filed after final on March 19, 2010 was improper because the Affidavit met the formal sufficiency and propriety of Rule 131 Affidavit under 37 CFR §1.131. Therefore, petitioner believes that the Advisory Action of May 11, 2010 was improperly issued. The Rule 131 Affidavit of March 19, 2010 should have been entered for appeal purpose.

Discussion and Analysis

In response to the Rule 131 Affidavit of March 19, 2010 filed under Rule 116, the examiner stated in the advisory action of May 11, 2010 that the applicant failed to provide a showing of good and sufficient reasons why the affidavit is necessary and was not presented earlier. It should be noted that entry of amendments after final rejection is not a matter of right (see 37 CFR 1.116). The review of the record shows that the examiner was in compliance with proper examining practice as set forth in MPEP § 714.13 in refusing entry of the after final amendment submitted on March 19, 2010. The examiner did not abuse her discretion or act in an arbitrary or capricious manner in denying entry of the proposed claims after final for the reasons stated. Therefore there is no basis for withdrawal of the Advisory Action issued on May 11, 2010.

The application file reveals that the applicant on August 5, 2010 has filed a Request for Continuing Examination under 37 CFR §1.114 in this application. Therefore, the finality of the Office Action mailed on February 5, 2010 is operatively withdrawn, and the applicant is now able to argue the merits of the examiner's rejections in subsequent amendments as filed on July 8, 2010 and August 5, 2010 (37 CFR § 1.114(d))[1]. The relief the applicant requested, namely the withdrawal of the finality of the February 5, 2010 and entry of the Rule 131 Affidavits of March 19, 2010 and August 5, 2010 have already occurred.

Petitioner is reminded that when considering the Rule 131 Affidavits any disagreement regarding the diligence issue as raised in the final rejection of February 5, 2010 is an appealable matter and will not decided by petition (see MPEP 715.08[2]).

Conclusion

The application is being forwarded to the examiner via the Supervisory Patent Examiner of Art Unit 3715 for consideration of the Rule 131 Affidavits filed on March 19, 2010 and August 5, 2010 and preparation of an Office action accordingly (MPEP §904.03).

Any request for reconsideration of this decision must be submitted within TWO (2) MONTHS from the mail date of this decision, 37 CFR 1.181(f). No extension of time under 37 CFR 1.136(a) is permitted. The mere filing of a petition will not stay any period for reply that may be running against the application, nor act as a stay of other proceedings. The reconsideration request should include a cover letter entitled "Renewed Petition under 37 CFR 1.181".

Any inquiry regarding this decision should be directed to Henry Yuen, Special Program Examiner, at (571) 272-4856.

Accordingly, the petition is dismissed as moot.

Donald T. Hajec, Director
Technology Center 3700

[1] 37 CFR §1.114(d) states: If an applicant timely files a submission and fee set forth in § 1.17(e), the Office will withdraw the finality of any Office action and the submission will be entered and considered.
[2] MPEP § 715.08 [R-6] Passed Upon by Primary Examiner/ The question of sufficiency of affidavits or declarations under 37 CFR 1.131 should be reviewed and decided by a primary examiner. Review of questions of formal sufficiency and propriety are by petition >filed under 37 CFR 1.181<. Such petitions are answered by the Technology Center Directors (MPEP § 1002.02(c)). Review on the merits of a 37 CFR 1.131 affidavit or declaration is by appeal to the Board of Patent Appeals and Interferences.

SPE RESPONSE FOR CERTIFICATE OF CORRECTION

DATE : 9-9-11 **Paper No.:** _____

TO SPE OF : ART UNIT 3772

SUBJECT : Request for Certificate of Correction for Appl. No.: 11/480,680 Patent No 7,450,315

CofC mailroom date: 8-22-11

Please respond to this request for a certificate of correction within 7 days.

FOR IFW FILES: Check C of C

Please review the requested changes/corrections as shown in the **COCIN** document(s) in the IFW application image. No new matter should be introduced, nor should the scope or meaning of the claims be changed.

Please complete the response (see below) and forward the completed response to scanning using document code **COCX**.

FOR PAPER FILES:

Please review the requested changes/corrections as shown in the attached certificate of correction. Please complete this form (see below) and forward it with the file to:

Certificates of Correction Branch (CofC)
Randolph Square – 9D10-A
Palm Location 7580

E Yang
Certificates of Correction Branch
703-756-1814 _____

Thank You For Your Assistance

The request for issuing the above-identified correction(s) is hereby:
Note your decision on the appropriate box.

- ☑ **Approved** — **All** changes apply.
- ☐ **Approved in Part** — Specify below which changes **do not** apply.
- ☐ **Denied** — State the reasons for denial below.

Comments: _____

9/19/11 3772
SPE **Art Unit**

UNITED STATES PATENT AND TRADEMARK OFFICE

Commissioner for Patents
United States Patent and Trademark Office
P.O. Box 1450
Alexandria, VA 22313-1450
www.uspto.gov

Patent No. : 7,950,395 B2
Ser. No. : 11/980,680
Inventor(s) : Edgell
Issued : May 31,2011
Title : RESTRAINING SYSTEM
Docket No. : 2718-0002
Re: Request for Certificate of Correction

Consideration has been given your request for the issuance of a certificate of correction for the above-identified patent under the provisions of Rule(s) 1.322 and/or 1.323.

Assignees' names and addresses (assignment data) printed in a patent, are based *solely* on information supplied in the appropriate space for identifying the assignment data, i.e., item 3 of the Issue Fee Transmittal Form PTOL-85B. Granting of a request under 37 CFR 3.81(b) is required to correct applicant's error providing ***incorrect or erroneous*** assignment data, *before* issuance of a Certificate of Correction, under 37 CFR 1.323 *(see Manual of Patent Examining Procedures (M.P.E.P) Chp.1400, sect. 1481).* This procedure is required *at any time after the issue fee is paid*, including after issuance of the patent.

In view of the foregoing, your request, in this matter, is hereby denied.

A request to correct the Assignee under 37 CFR 3.81(b) should include:

A. **the processing fee set forth in 37 CFR 1. 17(i) (currently $130);**
B. a statement that the failure to include the correct assignee name on the PTOL-85B was inadvertent; and
C. a copy of the Notice of Recordation of Assignment Document, reflecting the reel and frame number where the assignment(s) is recorded and/or reflecting proof of *the date* the assignment was submitted for recordation.

In the Request, Applicant(s) may request that the file be forwarded to Certificates of Correction Branch, for issuance of a Certificate of Correction, if the Request is granted.

Any request under 37 CFR 3.81(b) should be directed to the following address or facsimile number:

By mail: Mail Stop PETITIONS
Commissioner for Patents
Post Office Box 1450
Alexandria, VA 22313-1450

By hand: Customer Service Window
Mail Stop Petitions
Randolph Building
401 Dulany Street
Alexandria, VA 22314

By fax: (703) 872-9306
ATTN: Office of Petitions

If a fee (currently $100) was previously submitted for consideration of a Request for Certificate of Correction, under CFR 1.323, to correct assignment data, no additional fee is required.

Ennis Young
For Mary Diggs
Decisions & Certificates
of Correction Branch
(571) **272-3435** or (703) 756-1814

UNITED STATES PATENT AND TRADEMARK OFFICE

Commissioner for Patents
United States Patent and Trademark Office
P.O. Box 1450
Alexandria, VA 22313-1450
www.uspto.gov

ANTONELLI, TERRY, STOUT & KRAUS, LLP
1300 NORTH SEVENTEENTH STREET
SUITE 1800
ARLINGTON VA 22209-3873

MAILED

SEP 03 2010

OFFICE OF PETITIONS

In re Application of:	:	
Nitta et al.	:	
Application No. 11/980691	:	DECISION DISMISSING
Filing or 371(c) Date: 10/31/2007	:	PETITION UNDER
Title of Invention:	:	37 CFR 1.183
LIQUID CRYSTAL DRIVER AND	:	
LIQUID CRYSTAL DISPLAY DEVICE	:	
USING THE SAME	:	

This Decision is in response to the correspondence and Statement of Facts Under 37 CFR 1.47, filed May 29, 2008, to allow the other inventor(s) to proceed with the application on behalf of himself or herself and the nonsigning inventor(s). The petition is properly treated under 37 CFR 1.183, to waive the requirement under 37 CFR 1.67 that all of the inventors sign a supplemental declaration. The petition fee of $400.00 has been charged to Applicant's deposit account as authorized in the Fee Transmittal filed with the application on October 31, 2007.

The petition is **dismissed**.

Petitioner is given TWO (2) MONTHS from the mailing date of this decision to reply, correcting the below-noted deficiencies. Any reply should be entitled "Request for Reconsideration of Petition Under [insert the applicable code section]"; should only address the deficiencies noted below, except that the reply may include an oath or declaration executed by the non-signing inventor. Failure to respond will result in abandonment of the application. Any extensions of time will be governed by 37 CFR 1.136(a).

Applicant filed the present reissue application and an Oath/Declaration on October 31, 2007. The oath/declaration did not include the signature of inventor Makiko Ikeda.

Applicant files the present petition and Statement of Facts, along with a Reissue Oath/Declaration, to allow the other inventor(s) to proceed with the application on behalf of himself or herself and the nonsigning inventor(s). In support of the petition, Applicant states that inventor Makiko Ikeda changed her name by marriage to Makiko Miyamoto on August 24, 2002. Applicant provides further that Applicant obtained the last known address and telephone number

of inventor Miyamoto, and called the telephone number on June 2007; however, the telephone number was in use no longer. Applicant avers that they sent the Supplemental declaration for the present reissue application to her last known address by registered mail on June 14, 2007. The mail was returned by the Post Office with the Notice that the mail could not be delivered because a new address of Ms. Miyamoto was not known. Applicant provides that the supplemental declaration was not delivered to inventor Miyamoto, and avers that the foregoing shows that diligent efforts were made to find inventor Miyamoto, but were unsuccessful.

Applicable Law

37 CFR 1.67 states, in pertinent part:

> (a) The Office may require, or inventors and applicants may submit, a supplemental oath or declaration meeting the requirements of §1.63 or § 1.162 to correct any deficiencies or inaccuracies present in the earlier filed oath or declaration.
>
> > (1) Deficiencies or inaccuracies relating to all the inventors or applicants (§§ 1.42, 1.43, or § 1.47) may be corrected with a supplemental oath or declaration signed by all the inventors or applicants.

Suspension of the rules under 37 CFR 1.183 may be granted in an "extraordinary situation, when justice requires."

Analysis

Applicant's showing is deficient in that proof of the nonsigning inventor's refusal to join in the reissue application has not been established. There is no requirement for a showing under 37 CFR 1.47. Nevertheless, it is appropriate to apply the principles thereof to the situation at hand, in order to determine whether there exists an "extraordinary situation, when justice requires" waiver of the rules.

As to inability to find or reach an inventor, the MPEP provides:

> Where inability to find or reach a nonsigning inventor "after diligent effort" is the reason for filing under 37 CFR 1.47, a statement of facts should be submitted that fully describes the exact facts which are relied on to establish that a diligent effort was made.
> The fact that a nonsigning inventor is on vacation or out of town and is therefore temporarily unavailable to sign the declaration is not an acceptable reason for filing under 37 CFR 1.47.
>
> The statement of facts must be signed, where at all possible, by a person having firsthand knowledge of the facts recited therein. Statements based on hearsay will not normally be accepted. Copies of documentary evidence such as internet searches, certified mail return receipts, cover letters of instructions, telegrams, that support a finding that the nonsigning inventor could not be found or reached should be made part of the statement. The steps taken to locate the whereabouts of the nonsigning inventor should be included in the

statement of facts. It is important that the statement contain facts as opposed to conclusions.

Applicant asserts that efforts to locate the nonsigning inventor included calling the inventor's telephone number on June 2007, and the telephone number was in use no longer, and that the supplemental declaration for the present reissue application was sent to the inventor's last known address by registered mail on June 14, 2007. The mail was returned by the Post Office with the Notice that the mail could not be delivered because a new address of Ms. Miyamoto was not known. Applicant avers that the foregoing shows that diligent efforts were made to find inventor Miyamoto. However, at the very least, an Internet search, or a search of telephone directories should be undertaken of the regions where it is suspected the non-signing inventors may reside. Copies of the results of such searches must be referred to in any renewed petition. The steps taken to locate the whereabouts of the nonsigning inventor should be included in the statement of facts signed by a person with firsthand knowledge of the facts relied upon to establish diligent effort.

Further to this, and if the search produces any results, petitioner must again make a bona fide attempt to present a copy of the application to the inventor. MPEP 409.03(d).

Conclusion

The facts presented on the record do not adequately establish an extraordinary situation. Petitioner has not sufficiently established any special circumstances of equities that would require suspension of the rules in the interests of justice.

The petition is dismissed without prejudice. Applicant must demonstrate diligent effort in trying to find or reach the nonsigning inventor, including an Internet search, or a search of telephone directories of the regions where it is suspected the non-signing inventors may reside, and include copies of the search results, along with a statement from a person with firsthand knowledge of the search, before a refusal to join in the application may be alleged.

Further correspondence with respect to this matter should be addressed as follows:

By mail: Director for Patents
PO Box 1450
Alexandria, VA 22313-1450

By FAX: (571) 273-8300
Attn: Office of Petitions

By hand: Customer Service Window
Randolph Building
401 Dulany Street
Alexandria, VA 22314

Telephone inquiries concerning this matter should be directed to the undersigned at (571) 272-3232.

/DLW/

Derek L. Woods
Attorney
Office of Petitions

UNITED STATES PATENT AND TRADEMARK OFFICE

Commissioner for Patents
United States Patent and Trademark Office
P.O. Box 1450
Alexandria, VA 22313-1450
www.uspto.gov

ANTONELLI, TERRY, STOUT & KRAUS, LLP
1300 NORTH SEVENTEENTH STREET
SUITE 1800
ARLINGTON VA 22209-3873

MAILED
OCT 26 2010
OFFICE OF PETITIONS

In re Application of:	:	
Nitta et al.	:	
Application No. 11/980691	:	DECISION ON
Filing or 371(c) Date: 10/31/2007	:	PETITION UNDER
Title of Invention:	:	37 CFR 1.183
LIQUID CRYSTAL DRIVER AND	:	
LIQUID CRYSTAL DISPLAY DEVICE	:	
USING THE SAME	:	

This is a decision on the "Renewed Petition Under 37 C.F.R. § 1.183," filed October 7, 2010, and supplemented on October 25, 2010, to waive the requirement under 37 CFR 1.67 that all of the inventors sign a supplemental declaration.

The petition under 37 CFR 1.183 is **GRANTED**.

Background

Applicant filed the present reissue application and an Oath/Declaration on October 31, 2007. The oath/declaration did not include the signature of inventor Makiko Ikeda.

Applicant filed a petition and Statement of Facts, along with a Reissue Oath/Declaration, to allow the other inventor(s) to proceed with the application on behalf of himself or herself and the nonsigning inventor(s) on May 29, 2008. In support of the petition, Applicant stated that inventor Makiko Ikeda changed her name by marriage to Makiko Miyamoto on August 24, 2002. Applicant provided further that Applicant obtained the last known address and telephone number of inventor Miyamoto from Management, and from a colleague of the department to which Ms. Miyamoto belonged, and called the telephone number on June 2007; however, the telephone number was in use no longer. Applicant averred that they sent the Supplemental declaration for the present reissue application to her last known address by registered mail on June 14, 2007. The mail was returned by the Post Office with the Notice that the mail could not be delivered because a new address of Ms. Miyamoto was not known. Applicant provided that the supplemental declaration was not delivered to inventor Miyamoto, and averred that the foregoing showed that diligent efforts were made to find inventor Miyamoto, but were unsuccessful.

The petition was dismissed in a Decision mailed September 9, 2010. The Decision informed petitioner that at the very least, diligent effort required an Internet search, or a search of telephone directories of the regions where it is suspected the non-signing inventors may reside, and a grantable petition must include copies of the search results, along with a statement from a person with firsthand knowledge of the search, before a refusal to join in the application may be alleged.

The present renewed petition

Applicant files the present renewed petition and includes a statement of facts from Takahito Karasawa, wherein Mr. Karasawa provides, *inter alia*, that under his supervision a search of the Japan telephone directory database known as "Townpage" was conducted, but said telephone directory databases in Japan are available generally for obtaining an address of an organization and not an individual, and that petitioner was unsuccessful in revealing a telephone number for inventor Miyamoto. Applicant provides further that The Registration Family Law Of Japan makes a family registry unavailable to locate inventor Miyamoto.

Applicable Law

37 CFR 1.67 states, in pertinent part:

> (a) The Office may require, or inventors and applicants may submit, a supplemental oath or declaration meeting the requirements of §1.63 or § 1.162 to correct any deficiencies or inaccuracies present in the earlier filed oath or declaration.
>
> > (1) Deficiencies or inaccuracies relating to all the inventors or applicants (§§ 1.42, 1.43, or § 1.47) may be corrected with a supplemental oath or declaration signed by all the inventors or applicants.

Suspension of the rules under 37 CFR 1.183 may be granted in an "extraordinary situation, when justice requires."

With the present petition, Applicant has diligent effort to find or locate joint inventor Miyamoto to obtain her signature on the supplemental declaration. Accordingly, it is concluded that petitioner has demonstrated that this is an extraordinary situation requiring waiver of the rules.

The reissue declaration, filed on October 25, 2010, will be entered, despite the fact that the requirement set forth in 37 CFR 1.67(a)(1) that all the inventors sign a supplemental oath or declaration has not been satisfied.

The application file is being referred to Technology Center Art Unit 2629 for further processing in the normal course of business.

Telephone inquiries concerning this matter should be directed to the undersigned at (571) 272-3232.

/DLW/

Derek L. Woods
Attorney
Office of Petitions

UNITED STATES PATENT AND TRADEMARK OFFICE

Commissioner for Patents
United States Patent and Trademark Office
P.O. Box 1450
Alexandria, VA 22313-1450
www.uspto.gov

MUNCY, GEISSLER, OLDS & LOWE, PLLC
4000 LEGATO ROAD
SUITE 310
FAIRFAX, VA 22033

MAILED

JAN 13 2011

OFFICE OF PETITIONS

In re Application of	:	
Sheng-Hsing YEH	:	
Application No. 11/980,751	:	DECISION ON PETITION
Filed: October 31, 2007	:	
Attorney Docket No. 5545/040PUS1	:	

This is a decision on the petition under the unintentional provisions of 37 CFR 1.137(b), filed December 6, 2010, to revive the above-identified application.

The petition is **GRANTED**.

The application became abandoned for failure to reply in a timely manner to the Notice to File Missing Parts of Nonprovisional Application (Notice), mailed December 11, 2007. The Notice set a period for reply of **two (2)** months from the mail date of the Notice. No extensions of time under the provisions of 37 CFR 1.136(a) were obtained. Accordingly, the application became abandoned on February 12, 2008.

The petition satisfies the requirements of 37 CFR 1.137(b) in that petitioner has supplied (1) the reply in the form of the required fees; (2) the petition fee of $810; and (3) the required statement of unintentional delay.

It is not apparent whether the person signing the statement of unintentional delay was in a position to have firsthand or direct knowledge of the facts and circumstances of the delay at issue. Nevertheless, such statement is being treated as having been made as the result of a reasonable inquiry into the facts and circumstances of such delay. See 37 CFR 10.18(b) and Changes to Patent Practice and Procedure; Final Rule Notice, 62 Fed. Reg. 53131, 53178 (October 10, 1997), 1203 Off. Gaz. Pat. Office 63, 103 (October 21, 1997). In the event that such an inquiry has not been made, petitioner must make such an inquiry. If such inquiry results in the discovery that it is not correct that the entire delay in filing the required reply from the due date for the reply until the filing of a grantable petition pursuant to 37 CFR 1.137(b) was unintentional, petitioner must notify the Office.

The application file does not indicate a change of address has been filed in this case, although the address given on the petition differs from the address of record. A change of address should be filed in this case in accordance with MPEP 601.03. A courtesy copy of this decision is being mailed to the address noted on the petition. However, until otherwise instructed, all future correspondence regarding this application will be mailed solely to the address of record.

Telephone inquiries concerning this decision should be directed to the undersigned at (571) 272-6735.

This matter is being referred to the Office of Data Management for further pre-examination processing.

/Diane C. Goodwyn/
Diane C. Goodwyn
Petitions Examiner
Office of Petitions

cc: JOE MCKINNEY MUNCY
PO BOX 1364
FAIRFAX, VA 22038-1364

UNITED STATES PATENT AND TRADEMARK OFFICE

Commissioner for Patents
United States Patent and Trademark Office
P.O. Box 1450
Alexandria, VA\22313-1450
www.uspto.gov

MAILED
MAR 15 2011
OFFICE OF PETITIONS

PEARL COHEN ZEDEK LATZER, LLP
1500 BROADWAY
12TH FLOOR
NEW YORK NY 10036

In re Application of	:	
JESSOP, Richard V.	:	
Application No. 11/980,775	:	NOTICE
Filed: October 31, 2007	:	
Attorney Docket No. **P-9748-US3**	:	

This is a notice regarding your request for acceptance of a fee deficiency submission under 37 CFR 1.28 filed February 09, 2011.

The Office no longer investigates or rejects original or reissue applications under 37 CFR 1.56. **1098 Off. Gaz. Pat. Office 502 (January 3, 1989)**. Therefore, nothing in this Notice is intended to imply that an investigation was done.

Your fee deficiency submission under 37 CFR 1.28 is hereby **ACCEPTED**.

This application is no longer entitled to small entity status. Accordingly, all future fees paid in this application must be paid at the large entity rate.

Inquiries related to this communication should be directed to the undersigned at (571) 272-2783.

/Tredelle D. Jackson/
Paralegal Specialist
Office of Petitions

UNITED STATES PATENT AND TRADEMARK OFFICE

Commissioner for Patents
United States Patent and Trademark Office
P.O. Box 1450

MAILED
OCT 21 2011
OFFICE OF PETITIONS

Pearl Cohen Zedek Latzer, LLP
1500 Broadway
12th Floor
New York NY 10036

In re Application of	:	
Michael J. SHAMBLOTT et al.	:	ON PETITION
Application No. 11/980,797	:	
Filed: October 31, 2007	:	
Atty. Docket No.: P-9105-US	:	

This is a decision on the petition under 37 CFR 1.137(b), filed October 6, 2011, to revive the above-identified application.

The petition is **GRANTED.**

The application became abandoned for failure to reply in a timely manner to the final Office action mailed February 9, 2011, which set a shortened statutory period for reply of three (3) months. No extension of time under the provisions of 37 CFR 1.136(a) was obtained. The application became abandoned May 10, 2011. A Notice of Abandonment was mailed August 25, 2011.

The application is being revived solely for purposes of continuity. As continuity has been established by this decision reviving the application, the application is again abandoned in favor of continuing application 13/206,320.

There is no indication that the person signing the instant petition was ever given a power of attorney or authorization of agent to prosecute the above-identified application. If the person signing the instant petition desires to receive future correspondence regarding this application, the appropriate power of attorney or authorization of agent must be submitted. While a courtesy cop y of this decision is being mailed to the person signing the instant petition, all future correspondence will be directed to the address currently of record until such time as appropriate instructions are received to the contrary.

An extension of time under 37 CFR 1.136 must be filed prior to the expiration of the maximum extendable period for reply. *See* In re Application of S., 8 USPQ2d 1630, 1631 (Comm'r Pats. 1988). Since the $635 extension of time fee submitted with the petition on October 6, 2011 was subsequent to the maximum extendable period for reply, this fee is unnecessary and will be credited to petitioner's deposit account.

Telephone inquiries relating to this decision should be directed to Robert DeWitty, Petitions Examiner, Office of Petitions (571-272-8427).

for Anthony Knight
Director
Office of Petitions

cc: Janelle Waack
1000 Louisiana, 53rd Floor
Houston, TX 77002

UNITED STATES PATENT AND TRADEMARK OFFICE

Commissioner for Patents
United States Patent and Trademark Office
P.O. Box 1450
Alexandria, VA 22313-1450
www.uspto.gov

MAILED
FEB 13 2012
OFFICE OF PETITIONS

Pearl Cohen Zedek Latzer, LLP
1500 Broadway
12th Floor
New York, NY 10036

In re Patent of Kritchman et al.	:	
Patent No. 7,958,841	:	
Issue Date: June 14, 2011	:	Letter
Application No. 11/980,802	:	
Filing Date: October 31, 2007	:	
Attorney Docket No. P-5526-US2	:	

This is a notice regarding the request for acceptance of a fee deficiency submission under 37 CFR 1.28(c) filed January 23, 2012.

Applicants submitted $755 for the issue fee on May 5, 2011. The issue fee due for large entities, as of May 5, 2011, was $1,510.

As of September 26, 2011, the issue fee for large entities was increased to $1,740.

The request includes a payment of $755 ($1,510 -$755). However, the deficiency due is $985 ($1,740 - $755). *See* 37 CFR 1.28(c) ("The deficiency is based on the amount of the fee, for other than a small entity, in effect at the time the deficiency is paid in full."). Therefore, the Office has charged $230 ($985 - $785) to Deposit Account No. 50-3355 per the general fee authorization set forth in the request.

The deficiency payment of $985 is hereby accepted.

The change of status to large entity has been entered and made of record.

Telephone inquiries regarding this communication should be directed to Petitions Attorney Steven Brantley at (571) 272-3203.

Charles Steven Brantley
Senior Petitions Attorney
Office of Petitions

UNITED STATES PATENT AND TRADEMARK OFFICE

Commissioner for Patents
United States Patent and Trademark Office
P.O. Box 1450
Alexandria, VA 22313-1450
www.uspto.gov

MAILED

DEC 08 2011

OFFICE OF PETITIONS

DENTSPLY INTERNATIONAL INC
570 WEST COLLEGE AVENUE
YORK, PA 17404

In re Application of	:	
David P. Pollock, et al.	:	
Application No.: 11/980,834	:	ON PETITION
Filed: October 31, 2007	:	
Attorney Docket No.: DPD-7311-CON	:	

This is a decision on the petition under 37 CFR 1.137(b), filed November 11, 2011, to revive the above-identified application.

The petition is **GRANTED**.

The petition is not signed by a registered attorney or agent of record. However, in accordance with 37 CFR 1.34(a), the signature of Leana Levin appearing on the petition shall constitute a representation to the United States Patent and Trademark Office that she is authorized to represent the particular party on whose behalf she acts.

The application became abandoned for failure to timely file a reply within the meaning of 37 CFR 1.113 to the final Office action of February 1, 2011. A Notice of Abandonment was mailed on October 12, 2011. On November 11, 2011, the present petition was filed.

The petition satisfies the requirements of 37 CFR 1.137(b) in that petitioner has supplied (1) the reply in the form of a Request for Continued Examination (RCE), including the fee of $930; (2) the petition fee of $1,860; and (3) an adequate statement of unintentional delay[1].

Telephone inquiries concerning this decision should be directed to the undersigned at (571) 272-3204.

This application is being referred to Technology Center AU 3776 for processing of the RCE under 37 CFR 1.114 in the normal course of business.

/SDB/

Sherry D. Brinkley
Petitions Examiner
Office of Petitions

[1] 37 CFR 1.137(b)(3) requires a statement that the entire delay in filing the required reply from the due date for the reply until the filing of a grantable petition pursuant to 37 CFR 1.137(b) was unintentional. While the statement is not made by an attorney of record, such statement is being treated as having been made as the result of a reasonable inquiry into the facts and circumstances of such delay. See 37 CFR 10.18(b) and Changes to Patent Practice and Procedure; Final Rule Notice, 62 Fed. Reg. 53131, 53178 (October 10, 1997), 1203 Off. Gaz. Pat. Office 63, 103 (October 21, 1997). In the event that such an inquiry has not been made, petitioner must make such an inquiry. If such inquiry results in the discovery that it is not correct that the entire delay in filing the required reply from the due date for the reply until the filing of a grantable petition pursuant to 37 CFR 1.137(b) was unintentional, petitioner must notify the Office.

UNITED STATES PATENT AND TRADEMARK OFFICE

UNITED STATES DEPARTMENT OF COMMERCE
United States Patent and Trademark Office
Address: COMMISSIONER FOR PATENTS
P.O. Box 1450
Alexandria, Virginia 22313-1450
www.uspto.gov

APPLICATION NO.	FILING DATE	FIRST NAMED INVENTOR	ATTORNEY DOCKET NO.	CONFIRMATION NO.
11/980,843	10/31/2007	Gary M. Hieftje	29920-204200	7443

7590 01/14/2011
BARNES & THORNBURG LLP
11 SOUTH MERIDIAN
INDIANAPOLIS, IN 46204

EXAMINER
MASKELL, MICHAEL P

ART UNIT	PAPER NUMBER
2881	

NOTIFICATION DATE	DELIVERY MODE
01/14/2011	ELECTRONIC

ACKNOWLEDGEMENT OF REQUEST

Notice of Allowance/Allowability Mailed

The request to print a color drawing reference as the first paragraph in the portion of the specification containing a brief description of the drawings as required by 37 CFR 1.84 and MPEP § 608.02 has been received by the United States Patent and Trademark Office and will be entered into the specification.

571-272-4200 or 1-888-786-0101
Application Assistance Unit
Office of Data Management

FORM PTOM327-5 (Rev. 02/08)

UNITED STATES PATENT AND TRADEMARK OFFICE

Commissioner for Patents
United States Patent and Trademark Office
P.O. Box 1450
Alexandria, VA 22313-1450
www.uspto.gov

January 14, 2011

BARNES & THORNBURG LLP
11 SOUTH MERIDIAN
INDIANAPOLIS IN 46204

In re Application of	:	
Gary M. Hieftje et al.	:	**DECISION ON PETITION**
Application No. 11980843	:	
Filed: 10/31/2007	:	***ACCEPTANCE OF COLOR***
Attorney Docket No. 29920-204200	:	***DRAWINGS***

This is a decision on the Petition to Accept Color Drawings under 37 C.F.R 1.84 (a) (2), received in the United States Patent and Trademark Office (USPTO) October 31, 2007.

The petition is **GRANTED**.

A grantable petition under 37 C.F.R. 1.84(a) (2) must be accompanied by the following.

1. The fee set forth under 37 C.F.R. 1.17(h),
2. Three (3) sets of the color drawings in question, or (1) set if filed via EFS, and
3. The specification contains appropriate language referring to the color drawings as the first paragraph in that portion of the specification relating to the brief description of the drawings.

The petition was accompanied by all of the required fees and drawings. The specification contains the appropriate language. Therefore, the petition is GRANTED.

Telephone inquires relating to this decision may be directed to the undersigned in the Office of Data Management at 571-272-4200.

/Don Fairchild/
Office of Data Management
Publications Branch

UNITED STATES PATENT AND TRADEMARK OFFICE

Commissioner for Patents
United States Patent and Trademark Office
P.O. Box 1450
Alexandria, VA 22313-1450
www.uspto.gov

DYKEMA GOSSETT PLLC
39577 WOODWARD AVENUE
SUITE 300
BLOOMFIELD HILLS MI 48304-5086

MAILED
SEP 14 2010
OFFICE OF PETITIONS

In re Application of	:	
Andrew Bartels	:	DECISION ON PETITION
Application No. 11/980,851	:	TO WITHDRAW
Filed: October 31, 2007	:	FROM RECORD
Attorney Docket No. 065395-0018	:	

This is a decision on the request to withdraw as attorney of record under 37 CFR § 1.36(b), filed August 10, 2010.

The request is **NOT APPROVED**.

The request cannot be approved because it lacks the name of the first inventor or the assignee of record that is associated with the address listed in the request. Therefore, the change of correspondence address is considered improper.

The Office will only accept correspondence address changes to the most current address information provided for the assignee of the entire interest *who properly became of record under 37 CFR 3.71,* or, if no assignee of the entire interest has properly been made of record, the most current address information provided for the first named inventor. 37 CFR 3.71(c) states:

> *An assignee becomes of record either in a national patent application or a reexamination proceeding by filing a statement in compliance with § 3.73(b) that is signed by a party who is authorized to act on behalf of the assignee.*

The assignee must establish its ownership of the patent to the satisfaction of the Director. In this regard, the statement under 37 CFR 3.73(b) must have either: (i) documentary evidence of a chain of title from the original owner to the assignee (*e.g.*, copy of an executed assignment), and a statement affirming that the documentary evidence of the chain of title from the original owner to the assignee was or concurrently is being submitted for recordation pursuant to § 3.11; or (ii) a statement specifying where documentary evidence of a chain of title from the original owner to the assignee is recorded in the assignment records of the Office (*e.g.*, reel and frame number).

All future communications from the Office will continue to be directed to the above-listed address until otherwise notified by applicant.

Telephone inquires concerning this decision should be directed to the undersigned at (571) 272-4584.

/JoAnne Burke/
JoAnne Burke
Petitions Examiner
Office of Petitions

UNITED STATES PATENT AND TRADEMARK OFFICE

Commissioner for Patents
United States Patent and Trademark Office
P.O. Box 1450
Alexandria, VA 22313-1450
www.uspto.gov

DYKEMA GOSSETT PLLC
39577 WOODWARD AVENUE
SUITE 300
BLOOMFIELD HILLS MI 48304-5086

MAILED
NOV 08 2010
OFFICE OF PETITIONS

In re Application of	:	
Andrew Bartels	:	DECISION ON PETITION
Application No. 11/980,851	:	TO WITHDRAW
Filed: October 31, 2007	:	FROM RECORD
Attorney Docket No. **065395-0018**	:	

This is a decision on the renewed request to withdraw as attorney of record under 37 CFR § 1.36(b), filed September 17, 2010.

The request is **APPROVED**.

A grantable request to withdraw as attorney/agent of record must be signed by every attorney/agent seeking to withdraw or contain a clear indication that one attorney is signing on behalf of another/others. The Office requires the practitioner(s) requesting withdrawal to certify that he, she, or they have: (1) given reasonable notice to the client, prior to the expiration of the response period, that the practitioner(s) intends to withdraw from employment; (2) delivered to the client or a duly authorized representative of the client all papers and property (including funds) to which the client is entitled; and (3) notified the client of any responses that may be due and the time frame within which the client must respond , pursuant to 37 CFR 10.40.

The request was signed by Jeffrey L. Doyle on behalf of all attorneys of record who are associated with Customer Number 26127.

All attorneys/agents associated with Customer Number 26127 have been withdrawn.

Applicant is reminded that there is no attorney of record at this time.

The correspondence address of record has been changed and all future correspondence will be directed to the assignee of the entire interest at the address indicated below.

There is no outstanding Office action that requires a reply from the applicant.

Telephone inquiries concerning this decision should be directed to the undersigned at 571-272-4584.

JoAnne Burke
Petitions Examiner
Office of Petitions

cc: Robert T. Sill
3370 N. Hayden Road
Suite 123, PMB 736
Scottsdale, AZ 85251

UNITED STATES PATENT AND TRADEMARK OFFICE

Commissioner for Patents
United States Patent and Trademark Office
P.O. Box 1450
Alexandria, VA 22313-1450
www.uspto.gov

USDA, ARS, OTT
5601 SUNNYSIDE AVE
RM 4-1159
BELTSVILLE MD 20705-5131

MAILED
JAN 03 2011
OFFICE OF PETITIONS

In re Application of	:	
Earle Raymond Hunt, Jr., et al.	:	
Application No. 11/980,868	:	DECISION ON PETITION
Filed: October 31, 2007	:	
Attorney Docket No. 0155.07	:	

This is a decision on the petition under the unintentional provisions of 37 CFR 1.137(b), filed December 7, 2010, to revive the above-identified application.

The petition is **GRANTED**.

The application became abandoned for failure to reply in a timely manner to the Notice to File Corrected Application Papers, mailed September 8, 2010. The Notice set a period for reply of two (2) months from the mail date of the Notice. This period for reply was NOT extendable under 37 CFR 1.36(a). Accordingly, the application became abandoned on November 9, 2010. The Notice of Abandonment was mailed November 22, 2010.

The petition satisfies the requirements of 37 CFR 1.137(b) in that petitioner has supplied (1) the reply in the form of a substitute specification, (2) the petition fee of $1,620, and (3) a proper statement of unintentional delay.

Telephone inquiries concerning this decision should be directed to Terri Johnson at (571) 272-2991.

This application is being referred to the Office of Data Management for further processing.

/Terri Johnson/
Terri Johnson
Petitions Examiner
Office of Petitions

UNITED STATES PATENT AND TRADEMARK OFFICE

Commissioner for Patents
United States Patent and Trademark Office
P.O. Box 1450
Alexandria, VA 22313-1450
www.uspto.gov

BATTELLE MEMORIAL INSTITUTE
505 KING AVENUE
COLUMBUS OH 43201-2693

MAILED

NOV 22 2010

OFFICE OF PETITIONS

In re Application of	:	
Jay R. Sayre et al.	:	
Application No. 11/980,873	:	DECISION ON PETITION
Filed: October 31, 2007	:	
Attorney Docket No. **15578**	:	

This is a decision on the petition under the unintentional provisions of 37 CFR 1.137(b), filed November 4, 2010, to revive the above-identified application.

There is no indication that the petition is signed by a registered patent attorney or patent agent of record. However, in accordance with 37 CFR 1.34, the signature of Mr. Gary M. Sutter appearing on the correspondence shall constitute a representation to the United States Patent and Trademark Office that he is authorized to represent the particular party in whose behalf he acts. If, Mr. Sutter desires to receive correspondence regarding this file, the appropriate power of attorney documents must be submitted. A courtesy copy of this decision is being mailed to Mr. Sutter, the petitioner herein. However, until otherwise instructed, all future correspondence regarding this application file will be directed solely to the above-noted correspondence address of record.

The application became abandoned for failure to reply in a timely manner to the non-final Office action mailed, April 26, 2010, which set a shortened statutory period for reply of three (3) months. No extensions of time under the provisions of 37 CFR 1.136(a) were obtained. Accordingly, the application became abandoned on July 27, 2010.

The petition is **GRANTED**.

The petition satisfies the requirements of 37 CFR 1.137(b) in that petitioner has supplied (1) the reply in the form of an amendment, (2) the petition fee of $810, and (3) a proper statement of unintentional delay.

It is not apparent whether the person signing the statement of unintentional delay was in a position to have firsthand or direct knowledge of the facts and circumstances of the delay at issue. Nevertheless, such statement is being treated as having been made as the result of a reasonable inquiry into the facts and circumstances of such delay. See 37 CFR 10.18(b) and Changes to Patent Practice and Procedure; Final Rule Notice, 62 Fed. Reg. 53131, 53178 (October 10, 1997), 1203 Off. Gaz. Pat. Office 63, 103 (October 21, 1997). In the event that such an inquiry has not been made,

petitioner must make such an inquiry. If such inquiry results in the discovery that it is not correct that the entire delay in filing the required reply from the due date for the reply until the filing of a grantable petition pursuant to 37 CFR 1.137(b) was unintentional, petitioner must notify the Office.

37 CFR 1.137(b)(3) requires a statement that "the entire delay in filing the required reply from the due date for the reply until the filing of a grantable petition pursuant to 37 CFR 1.137(b) was unintentional." Since the statement appearing in the petition varies from the language required by 37 CFR 1.137(b)(3), the statement is being construed as the required statement. Petitioner must notify the Office if this is **not** a correct reading of the statement appearing in the petition.

An extension of time under 37 CFR 1.136 must be filed prior to the expiration of the maximum extendable period for reply. *See* In re Application of S., 8 USPQ2d 1630, 1631 (Comm'r Pats. 1988). Since the $555 extension of time fee submitted with the petition on November 4, 2010, was subsequent to the maximum extendable period for reply, this fee is unnecessary and will be credited to petitioner's deposit account.

Telephone inquiries concerning this decision should be directed to JoAnne Burke at (571) 272-4584.

This application is being referred to Technology Center AU 1762 for appropriate action by the Examiner in the normal course of business.

JoAnne Burke
Petitions Examiner
Office of Petitions

cc: Gary M. Sutter
MacMillan, Sobanski & Todd, LLC
One Maritime Plaza, Fifth Floor
720 Water Street
Toledo, OH 43604

SPE RESPONSE FOR CERTIFICATE OF CORRECTION

DATE : 3-20-12 Paper No.: _____

TO SPE OF : ART UNIT 1762

SUBJECT : Request for Certificate of Correction for Appl. No.: 11/980873 Patent No.: 7897650

CofC mailroom date: 8-22-11

Please respond to this request for a certificate of correction within 7 days.

FOR IFW FILES: Should COFC be approved

Please review the requested changes/corrections as shown in the **COCIN** document(s) in the IFW application image. No new matter should be introduced, nor should the scope or meaning of the claims be changed.

Please complete the response (see below) and forward the completed response to scanning using document code **COCX**.

FOR PAPER FILES:

Please review the requested changes/corrections as shown in the attached certificate of correction. Please complete this form (see below) and forward it with the file to:

Certificates of Correction Branch (CofC)
Randolph Square – 9D10-A
Palm Location 7580

E. Yang
Certificates of Correction Branch
703-756-1814 _____

Thank You For Your Assistance

The request for issuing the above-identified correction(s) is hereby:
Note your decision on the appropriate box.

- ☒ **Approved** — **All** changes apply.
- ☐ **Approved in Part** — Specify below which changes **do not** apply.
- ☐ **Denied** — State the reasons for denial below.

Comments: _____

_____

_____

_____

_____

_____ 1762
SPE **Art Unit**

UNITED STATES PATENT AND TRADEMARK OFFICE

Commissioner for Patents
United States Patent and Trademark Office
P.O. Box 1450
Alexandria, VA 22313-1450
www.uspto.gov

MAILED

MAY 20 2011

OFFICE OF PETITIONS

CARLSON, GASKEY & OLDS, P.C.
400 WEST MAPLE ROAD
SUITE 350
BIRMINGHAM MI 48009

In re Application of	:	
Douglas P. Blunden et al.	:	
Application No. 11/980,876	:	DECISION ON PETITION
Filed: October 31, 2007	:	
Attorney Docket No. 67495-001 PUS1	:	

This is a decision on the petition under the unintentional provisions of 37 CFR 1.137(b), filed April 22, 2011, to revive the above-identified application.

The petition is **GRANTED**.

The application became abandoned for failure to reply in a timely manner to the non-final Office action mailed June 23, 2010, which set a shortened statutory period for reply of three (3) months. No extensions of time under the provisions of 37 CFR 1.136(a) were obtained. Accordingly, the application became abandoned on September 24, 2010. A Notice of Abandonment was mailed on February 7, 2011.

The petition satisfies the requirements of 37 CFR 1.137(b) in that petitioner has supplied (1) the reply in the form of an amendment, (2) the petition fee of $810 and (3) a proper statement of unintentional delay. Accordingly, the amendment is accepted as being unintentionally delayed.

Telephone inquiries concerning this decision should be directed to Kimberly Inabinet at (571) 272-4618.

This application is being referred to Technology Center AU 3728 for appropriate action by the Examiner in the normal course of business on the reply received April 22, 2011.

/Kimberly Inabinet/

Kimberly Inabinet
Petitions Examiner
Office of Petitions

SPE RESPONSE FOR CERTIFICATE OF CORRECTION

Paper No.:20100809

DATE : August 09, 2010

TO SPE OF : ART UNIT 2839

SUBJECT : Request for Certificate of Correction on Patent No.: 7,663,258

A response is requested with respect to the accompanying request for a certificate of correction.

Please complete this form and return with file, within **7** days to:
Certificates of Correction Branch - ST (South Tower) 9A22
Palm location **7590** - Tel. No. (703) 305-8309

With respect to the change(s) requested, correcting Office and/or Applicant's errors, should the patent read as shown in the certificate of correction? No new matter should be introduced, nor should the scope or meaning of the claims be changed.

Thank You For Your Assistance **Certificates of Correction Branch**

The request for issuing the above-identified correction(s) is hereby:

Note your decision on the appropriated box.

☒ **Approved** All changes apply.

☐ **Approved in Part** Specify below which changes **do not** apply.

☐ **Denied** State the reasons for denial below.

Comments:

The C of C corrects printing error.

/T C Patel/
Supervisory Patent Examiner.Art Unit 2839

Best Available Copy

SPE RESPONSE FOR CERTIFICATE OF CORRECTION

DATE : 10-27-11

TO SPE OF : ART UNIT 1762

SUBJECT : Request for Certificate of Correction for Appl. No.: 11/981003 Patent No.: 8008373

CofC mailroom date: 09-14-11

Please respond to this request for a certificate of correction within 7 days.

FOR IFW FILES:

Please review the requested changes/corrections as shown in the **COCIN** document(s) in the IFW application image. No new matter should be introduced, nor should the scope or meaning of the claims be changed.

Please complete the response (see below) and forward the completed response to scanning using document code **COCX**.

FOR PAPER FILES:

Please review the requested changes/corrections as shown in the attached certificate of correction. Please complete this form (see below) and forward it with the file to:

Certificates of Correction Branch (CofC)
Randolph Square – 9D10-A
Palm Location 7580

Note: _____

Angela Green 571.272.9005
CofC Branch 703-756-1814

Thank You For Your Assistance

The request for issuing the above-identified correction(s) is hereby:
Note your decision on the appropriate box.

- [x] **Approved** — **All** changes apply.
- [ ] **Approved In Part** — Specify below which changes **do not** apply.
- [ ] **Denied** — State the reasons for denial below.

Comments: _____

SPE Wu **Art Unit** 1762

UNITED STATES PATENT AND TRADEMARK OFFICE

Commissioner for Patents
United States Patent and Trademark Office
P.O. Box 1450
Alexandria, VA 22313-1450
www.uspto.gov

DUANE MORRIS LLP-Philadelphia
IP Department
30 South 17th Street
Philadelphia, PA 19103-4196

MAILED

AUG 30 2010

OFFICE OF PETITIONS

In re Application of	:	
Mark A. Reiley	:	
Application No. 11/981,009	:	DECISION ON PETITION
Filed: October 31, 2007	:	TO WITHDRAW
Attorney Docket No. 9414.18622-CIP DIV	:	FROM RECORD
	:	

This is a decision on the Request to Withdraw as attorney or agent of record under 37 C.F.R. § 1.36(b), filed July 20, 2010.

The request is **NOT APPROVED** because it is moot.

A review of the file record indicates that the power of attorney to Duane Morris LLP has been revoked by the assignee of the patent application on July 28, 2010. Accordingly, the request to withdraw under 37 C.F.R. § 1.36(b) is moot.

All future communications from the Office will continue to be directed to the below-listed address until otherwise notified by applicant.

Telephone inquires concerning this decision should be directed to Terri Johnson at 571-272-2991.

Terri Johnson
Petitions Examiner
Office of Petitions

cc: **RYAN, KROMHOLZ & MANION, S.C.**
P.O. Box 26618
Milwaukee, WI 53226

UNITED STATES PATENT AND TRADEMARK OFFICE

UNITED STATES DEPARTMENT OF COMMERCE
United States Patent and Trademark Office
Address: COMMISSIONER FOR PATENTS
P.O. Box 1450
Alexandria, Virginia 22313-1450
www.uspto.gov

HENRY E. BARTONY, JR
BARTONY & ASSOCIATES LLC
P.O. BOX 910
BUTLER, PA 16003-0910

Mail Date: 08/05/2010

Applicant	: Dennis P. Curran	: DECISION ON REQUEST FOR
Patent Number	: 7655640	: RECALCULATION of PATENT
Issue Date	: 02/02/2010	: TERM ADJUSTMENT IN VIEW
Application No	: 11/981,059	: OF WYETH AND NOTICE OF INTENT TO
Filed	: 10/31/2007	: ISSUE CERTIFICATE OF CORRECTION
		:

The Request for Recalculation is **GRANTED** to the extent indicated.

The patent term adjustment has been determined to be **56** days. The USPTO will *sua sponte* issue a certificate of correction reflecting the amount of PTA days determined by the recalculation.

Prior to the issuance of the certificate of correction, the USPTO will afford patentee an opportunity to be heard and request reconsideration. Accordingly, patentee has **one month or thirty (30) days**, whichever is longer, to file a request for reconsideration of this patent term adjustment calculation. See 35 U.S.C. 154(b)(3)(B)(ii) and 37 CFR 1.322(a)(4). No extensions of time will be granted under 37 CFR 1.136.

Patentee should use document code PET.OP if electronically filing a request for reconsideration of this patent term adjustment calculation. The patentee must also include the information required by 37 CFR 1.705(b)(2) and the fee required by 37 CFR 1.18(e). If patentee does not file a timely request for reconsideration of this patent term adjustment calculation including the information required by 37 CFR 1.705(b)(2) and the fee required by 37 CFR 1.18(e), the USPTO will issue a certificate of correction reflecting the PTA determination noted above.

Patentee should be aware that in order to preserve the right to review in the United States District Court for the District of Columbia of the USPTO patent term adjustment determination, patentee must ensure that he or she also take the steps required under 35 U.S.C. 154(b)(4)(A) in a timely manner. Nothing in the request for recalculation should be construed as providing an alternative time frame for commencing a civil action under 35 U.S.C. 154(b)(4)(A).

Any questions concerning this decision should be directed to the Office of Patent Legal Administration at 571-272-7702.

SPE RESPONSE FOR CERTIFICATE OF CORRECTION

DATE : March 8., 2010

TO SPE OF : ART UNIT 1624
SUBJECT : Request for Certificate of Correction for Appl. No /11/981059 patent 7655640

Please respond to this request for a certificate of correction within 7 days.

FOR IFW FILES:

Please review the requested changes/corrections as shown in the **COCIN** document(s) in the IFW application image. No new matter should be introduced, nor should the scope or meaning of the claims be changed.

Please complete the response (see below) and forward the completed response to scanning using document code **COCX**.

FOR PAPER FILES:

Please review the requested changes/corrections as shown in the attached certificate of correction. Please complete this form (see below) and forward it with the file to:

Certificates of Correction Branch (CofC)
Randolph Square – 9D10-A
Palm Location 7580

Magdalene Talley

Certificates of Correction Branch

571-272-0423 _____

Thank You For Your Assistance

The request for issuing the above-identified correction(s) is hereby:
Note your decision on the appropriate box.

☒ **Approved**	**All** changes apply.
☐ **Approved in Part**	Specify below which changes **do not** apply.
☐ **Denied**	State the reasons for denial below.

Comments: _____

1624

UNITED STATES PATENT AND TRADEMARK OFFICE

Commissioner for Patents
United States Patent and Trademark Office
P.O. Box 1450
Alexandria, VA 22313-1450
www.uspto.gov

MILLS & ONELLO LLP
ELEVEN BEACON STREET, SUITE 605
BOSTON, MA 02108

MAILED

MAR 16 2011

OFFICE OF PETITIONS

In re Application of	:	
Shienobu MAEDA, et al.	:	
Application No. 11/981,153	:	DECISION GRANTING PETITION
Filed: October 31, 2007	:	UNDER 37 CFR 1.313(c)(2)
Attorney Docket No. **SAM-0618DIV**	:	

This is a decision on the petition under 37 CFR 1.313(c)(2), filed March 15, 2011, to withdraw the above-identified application from issue after payment of the issue fee.

The petition is **GRANTED**.

The above-identified application is withdrawn from issue for consideration of a submission under 37 CFR 1.114 (request for continued examination). *See* 37 CFR 1.313(c)(2).

Petitioner is advised that the issue fee paid on February 16, 2011 cannot be refunded. If, however, this application is again allowed, petitioner may request that it be applied towards the issue fee required by the new Notice of Allowance.[1]

Telephone inquiries should be directed to the undersigned at (571) 272-7253.

This application is being referred to Technology Center AU 2811 for processing of the request for continued examination under 37 CFR 1.114 and for consideration of the concurrently filed information disclosure statement.

/Monica A. Graves/
Petitions Examiner, Office of Petitions

---

[1] *The request to apply the issue fee to the new Notice may be satisfied by completing and returning the new Part B – Fee(s) Transmittal Form (along with any balance due at the time of submission). Petitioner is advised that the Issue Fee Transmittal Form* ***must*** *be completed and timely submitted to avoid abandonment of the application.*

UNITED STATES PATENT AND TRADEMARK OFFICE

UNITED STATES DEPARTMENT OF COMMERCE
United States Patent and Trademark Office
Address: COMMISSIONER FOR PATENTS
P.O. Box 1450
Alexandria, Virginia 22313-1450
www.uspto.gov

APPLICATION NO.	FILING DATE	FIRST NAMED INVENTOR	ATTORNEY DOCKET NO.	CONFIRMATION NO.
11/981,175	10/31/2007	Toshikazu Kanaoka	3408.79325	7511

7590 11/04/2010

GREER, BURNS & CRAIN
300 S WACKER DR
25TH FLOOR
CHICAGO, IL 60606

EXAMINER
LOUIS JACQUES, JACQUES H

ART UNIT	PAPER NUMBER
2112	

MAIL DATE	DELIVERY MODE
11/04/2010	PAPER

DECISION GRANTING PETITION UNDER 37 CFR 1.138(d)

The declaration of express abandonment is recognized

This is in response to the petition under 37 CFR 1.138(d), requesting for a refund of any previously paid search fee and excess claims fee in the above-identified application.

The petition is granted.

The express abandonment is recognized. Any previously paid search fee and excess claims fee are hereby refunded.

Telephone inquiries should be directed to the Office of Data Management at (571) 272-4200.

Betty Powell

Patent Publication Branch
Office of Data Management

FORM PET651G (Rev. 08/07)

SPE RESPONSE FOR CERTIFICATE OF CORRECTION

DATE : 9/7/2011

TO SPE OF : ART UNIT 2432

SUBJECT : Request for Certificate of Correction for Appl. No.: 11/981177 Patent No.: 8010786B1

CofC mailroom date: 9/2/2011

Please respond to this request for a certificate of correction within 7 days.

FOR IFW FILES:

Please review the requested changes/corrections as shown in the **COCIN** document(s) in the IFW application image. No new matter should be introduced, nor should the scope or meaning of the claims be changed.

Please complete the response (see below) and forward the completed response to scanning using document code **COCX**.

FOR PAPER FILES:

Please review the requested changes/corrections as shown in the attached certificate of correction. Please complete this form (see below) and forward it with the file to:

Certificates of Correction Branch (CofC)
Randolph Square – 9D10-A
Palm Location 7580

Note: _____

Virginia Tolbert

Certificates of Correction Branch

(571) 272-0460

Thank You For Your Assistance

The request for issuing the above-identified correction(s) is hereby:
Note your decision on the appropriate box.

- ☑ **Approved** — **All** changes apply.
- ☐ **Approved in Part** — Specify below which changes **do not** apply.
- ☐ **Denied** — State the reasons for denial below.

Comments: Requested correction to claim 13 is approved.

/Gilberto Barron Jr./ — **SPE**

2432 — **Art Unit**

UNITED STATES PATENT AND TRADEMARK OFFICE

Commissioner for Patents
United States Patent and Trademark Office
P.O. Box 1450
Alexandria, VA 22313-1450
www.uspto.gov

THOMAS & BETTS CORPORATION
8155 T & B BOULEVARD - 4B-36
MEMPHIS TN 38125

MAILED

SEP 30 2010

OFFICE OF PETITIONS

In re Application of	:	
Xueming Cai et al.	:	
Application No. 11/981,231	:	DECISION ON PETITION
Filed: October 31, 2007	:	TO WITHDRAW
Attorney Docket No. T & B 2076	:	FROM RECORD
	:	

This is a decision on the Request to Withdraw as attorney or agent of record under 37 C.F.R. § 1.36(b), filed August 18, 2010.

The request is **APPROVED**.

A grantable request to withdraw as attorney/agent of record must be signed by every attorney/agent seeking to withdraw or contain a clear indication that one attorney is signing on behalf of another/others. A request to withdraw will not be approved unless at least 30 (thirty) days would remain between the date of approval and the later of the expiration date of a time to file a response or the expiration date of the maximum time period which can be extended under 37 C.F.R. § 1.136(a).

The request was signed by Michael Hoelter, attorney/agent associated with customer number 27361. Michael Hoelter has been withdrawn. All other attorneys/agents will remain of record.

The correspondence address will remain the same until further notified by applicant.

Telephone inquiries concerning this decision should be directed to Kimberly Inabinet at 571-272-4618.

/Kimberly Inabinet/

Kimberly Inabinet
Petitions Examiner
Office of Petitions

cc: Michael L. Hoelter
3045 Country Place Drive E.
Collierville, TN 38017

UNITED STATES PATENT AND TRADEMARK OFFICE

Commissioner for Patents
United States Patent and Trademark Office
P.O. Box 1450
Alexandria, VA 22313-1450
www.uspto.gov

Decision Date : October 11,2011

In re Application of :

Philip Day

Application No : 11981306

Filed : 31-Oct-2007

Attorney Docket No : 13761.00

DECISION ON PETITION

UNDER CFR 1.137(b)

This is an electronic decision on the petition under 37 CFR 1.137(b), filed October 11,2011 , to revive the above-identified application.

The petition is **GRANTED.**

The above-identified application became abandoned for failure to reply in a timely manner to the Notice of Allowance and Issue Fee(s) Due. The date of abandonment is the day after the expiration date of the period set for reply in the Notice.

The electronic petition satisfies the conditions for revival pursuant to the provisions of 37 CFR 1.137(b) in that (1) the reply in the form of payment of the Issue Fee and the Publication Fee (if necessary); (2) the petition fee as set forth in 37 CFR 1.17 (m); (3) the drawing correction and/or other deficiencies (if necessary); and (4) the required statement of unintentional delay have been received. Accordingly, the Issue Fee payment is accepted as having been unintentionally delayed.

Telephone inquiries concerning this decision should be directed to the Patent Electronic Business Center (EBC) at 866-217-9197.

This application file is being directed to the Office of Data Management.

Office of Petitions

Doc Code: PET.AUTO Document Description: Petition automatically granted by EFS-Web	PTO/SB/64 U.S. Patent and Trademark Office Department of Commerce

Electronic Petition Request	PETITION FOR REVIVAL OF AN APPLICATION FOR PATENT ABANDONED UNINTENTIONALLY UNDER 37 CFR 1.137(b)
Application Number	11981306
Filing Date	31-Oct-2007
First Named Inventor	Philip Day
Art Unit	2876
Examiner Name	DANIEL HESS
Attorney Docket Number	13761.00
Title	PRIVACY-ENABLED KEYPAD

The above-identified application became abandoned for failure to file a timely and proper reply to a notice or action by the United States Patent and Trademark Office. The date of abandonment is the day after the expiration date of the period set for reply in the office notice or action plus any extensions of time actually obtained.

APPLICANT HEREBY PETITIONS FOR REVIVAL OF THIS APPLICATION

NOTE: A grantable petition requires the following items:
(1) Petition fee;
(2) Reply and/or issue fee;
(3) Terminal disclaimer with disclaimer fee – required for all utility and plant applications filed before June 8, 1995; and for all design applications;
(4) Statement that the entire delay was unintentional.

Petition fee
The petition fee under 37CFR 1.17(m) is attached.

☐ Applicant claims SMALL ENTITY status. See 37 CFR 1.27.

☐ Applicant is no longer claiming SMALL ENTITY status. See 37 CFR 1.27(g)(2).

☐ Applicant(s) status remains as SMALL ENTITY.

☒ Applicant(s) status remains as other than SMALL ENTITY.

Issue Fee and Publication Fee :

Issue Fee and Publication Fee must accompany ePetition.

☒ Issue Fee Transmittal is attached

Drawing corrections and/ or other deficiencies.

- (●) Drawing corrections and/ or other deficiencies are not required
- ( ) I certify, in accordance with 37 CFR 1.4.(D)(4), that drawing corrections and/ or other deficiencies have previously been filed on
- ( ) Drawing corrections and/ or other deficiencies are attached.

☒ STATEMENT: The entire delay in filing the required reply from the due date for the required reply until the filing of a grantable petition under 37 CFR 1.137(b) was unintentional.

THIS PORTION MUST BE COMPLETED BY THE SIGNATORY OR SIGNATORIES

I certify, in accordance with 37 CFR 1.4(d)(4) that I am:

- (●) An attorney or agent registered to practice before the Patent and Trademark Office who has been given power of attorney in this application.
- ( ) An attorney or agent registered to practice before the Patent and Trademark Office, acting in a representative capacity.
- ( ) A sole inventor
- ( ) A joint inventor; I certify that I am authorized to sign this submission on behalf of all of the inventors.
- ( ) A joint inventor; all of whom are signing this e-petition.
- ( ) The assignee of record of the entire interest that has properly made itself of record pursuant to 37 CFR 3.71.

Signature	/Paul W. Martin/
Name	Paul W. Martin
Registration Number	34870

UNITED STATES PATENT AND TRADEMARK OFFICE

Commissioner for Patents
United States Patent and Trademark Office
P.O. Box 1450
Alexandria, VA 22313-1450
www.uspto.gov

Mauriel Kapouytian & Treffert LLP
151 1st Avenue
#23
New York NY 10003

MAILED

OCT 25 2010

OFFICE OF PETITIONS

In re Application of
Zoe Abrams et al.
Application No. 11/981,319
Filed: October 30, 2007
Attorney Docket No. **10033-2005800**

DECISION ON PETITION
TO WITHDRAW
FROM RECORD

This is a decision on the Request to Withdraw as attorney or agent of record under 37 CFR § 1.36(b), filed September 22, 2010.

The request is **NOT APPROVED**.

The request cannot be approved because it lacks the name of the first inventor or the assignee of record that is associated with the address listed in the request. Therefore, the change of correspondence address is considered improper.

The Office will only accept correspondence address changes to the most current address information provided for the assignee of the entire interest *who properly became of record under 37 CFR 3.71,* or, if no assignee of the entire interest has properly been made of record, the most current address information provided for the first named inventor. 37 CFR 3.71(c) states:

> *An assignee becomes of record either in a national patent application or a reexamination proceeding by filing a statement in compliance with § 3.73(b) that is signed by a party who is authorized to act on behalf of the assignee.*

The assignee must establish its ownership of the patent to the satisfaction of the Director. In this regard, the statement under 37 CFR 3.73(b) must have either: (i) documentary evidence of a chain of title from the original owner to the assignee (*e.g.*, copy of an executed assignment), and a statement affirming that the documentary evidence of the chain of title from the original owner to the assignee was or concurrently is being submitted for recordation pursuant to § 3.11; or (ii) a statement specifying where documentary evidence of a chain of title from the original owner to the assignee is recorded in the assignment records of the Office (*e.g.*, reel and frame number).

All future communications from the Office will continue to be directed to the above-listed address until otherwise notified by applicant.

Telephone inquires concerning this decision should be directed to the undersigned at 571-272-4584.

/JoAnne Burke/
JoAnne Burke
Petitions Examiner
Office of Petitions

UNITED STATES PATENT AND TRADEMARK OFFICE

UNITED STATES DEPARTMENT OF COMMERCE
United States Patent and Trademark Office
Address: COMMISSIONER FOR PATENTS
P.O. Box 1450
Alexandria, Virginia 22313-1450
www.uspto.gov

APPLICATION NO.	FILING DATE	FIRST NAMED INVENTOR	ATTORNEY DOCKET NO.	CONFIRMATION NO.
11/981,380	10/31/2007	John Rogers	216-06	7374

7590 05/26/2011
GREENLEE SULLIVAN P.C.
4875 PEARL EAST CIRCLE
SUITE 200
BOULDER, CO 80301

EXAMINER
YUSHIN, NIKOLAY K

ART UNIT	PAPER NUMBER
2893	

MAIL DATE	DELIVERY MODE
05/26/2011	PAPER

ACKNOWLEDGEMENT OF REQUEST

Notice of Allowance/Allowability Mailed

The request to print a color drawing reference as the first paragraph in the portion of the specification containing a brief description of the drawings as required by 37 CFR 1.84 and MPEP § 608.02 has been received by the United States Patent and Trademark Office and will be entered into the specification.

571-272-4200 or 1-888-786-0101
Application Assistance Unit
Office of Data Management

FORM PTOM327-5 (Rev. 02/08)

UNITED STATES PATENT AND TRADEMARK OFFICE

Commissioner for Patents
United States Patent and Trademark Office
P.O. Box 1450
Alexandria, VA 22313-1450
www.uspto.gov

May 26, 2011

GREENLEE SULLIVAN P.C.
4875 PEARL EAST CIRCLE
SUITE 200
BOULDER CO 80301

In re Application of	:	
John Rogers et al.	:	**DECISION ON PETITION**
Application No. 11981380	:	
Filed: 10/31/2007	:	***ACCEPTANCE OF COLOR***
Attorney Docket No. 216-06	:	***DRAWINGS***

This is a decision on the Petition to Accept Color Drawings under 37 C.F.R 1.84 (a) (2), received in the United States Patent and Trademark Office (USPTO) October 31, 2007.

The petition is **GRANTED**.

A grantable petition under 37 C.F.R. 1.84(a) (2) must be accompanied by the following.

1. The fee set forth under 37 C.F.R. 1.17(h),
2. Three (3) sets of the color drawings in question, or (1) set if filed via EFS, and
3. The specification contains appropriate language referring to the color drawings as the first paragraph in that portion of the specification relating to the brief description of the drawings.

The petition was accompanied by all of the required fees and drawings. The specification contains the appropriate language. Therefore, the petition is GRANTED.

Telephone inquires relating to this decision may be directed to the undersigned in the Office of Data Management at 571-272-4200.

/Don Fairchild/
Office of Data Management
Publications Branch

UNITED STATES PATENT AND TRADEMARK OFFICE

UNITED STATES DEPARTMENT OF COMMERCE
United States Patent and Trademark Office
Address: COMMISSIONER FOR PATENTS
P.O. Box 1450
Alexandria, Virginia 22313-1450
www.uspto.gov

APPLICATION NO.	FILING DATE	FIRST NAMED INVENTOR	ATTORNEY DOCKET NO.	CONFIRMATION NO.
11/981,393	10/31/2007	Prathibha Shetty	RELIA P-108 CIP	9101

28752 7590 11/18/2010
LACKENBACH SIEGEL, LLP
LACKENBACH SIEGEL BUILDING
1 CHASE ROAD
SCARSDALE, NY 10583

EXAMINER
GAMETT, DANIEL C

ART UNIT	PAPER NUMBER
1647	

MAIL DATE	DELIVERY MODE
11/18/2010	PAPER

Please find below and/or attached an Office communication concerning this application or proceeding.

The time period for reply, if any, is set in the attached communication.

UNITED STATES PATENT AND TRADEMARK OFFICE

Commissioner for Patents
United States Patent and Trademark Office
P.O. Box 1450
Alexandria, VA 22313-1450
www.uspto.gov

November 17, 2010

LACKENBACH SIEGEL, LLP
LACKENBACH SIEGEL BUILDING
1 CHASE ROAD
SCARSDALE NY 10583

In re Application of	:	
Prathibha Shetty, et al	:	**DECISION ON PETITION**
Application No. 11981393	:	
Filed: 10/31/2007	:	
Attorney Docket No. **RELIA P-108 CIP**	:	

This is a decision on the Petition to Accept Color Drawings under 37 C.F.R 1.84 (a) (2), received in the United States Patent and Trademark Office (USPTO) October 31, 2007.

The petition is **DISMISSED.**

A grantable petition under 37 C.F.R. 1.84(a) (2) must be accompanied by the following.

1. The fee set forth under 37 C.F.R. 1.17(h),
2. Three (3) sets of the color drawings in question, (One (1) set for EFW filings, and
3. The specification containing the following language as the first paragraph in that portion of the specification relating to the brief description of the drawings

"The patent or application file contains at least one drawing executed in color. Copies of this patent or patent application publication with color drawing(s) will be provided by the Office upon request and payment of the necessary fee."

The petition did not meet the following requirement(s). 1 ☐ 2 ☑ 3 ☐

A renewed petition filed under 37 C.F.R. 1.84 (a) (2) must be filed within TWO (2) MONTHS of this decision. If a renewed petition is not filed within the TWO (2) Months of this decision the drawings will be printed in black and white.

Telephone inquires relating to this decision may be directed to the undersigned in the Office of Data Management at 571-272-4200.

/Laura L. Feldman/
Quality Control Specialist
Office of Data Management
Publications Branch

UNITED STATES PATENT AND TRADEMARK OFFICE

Commissioner for Patents
United States Patent and Trademark Office
P.O. Box 1450
Alexandria, VA 22313-1450
www.uspto.gov

LA LAW FIRM, P.C.
3424 BRETON CT., NE
ATLANTA GA 30319

MAILED
JUN 17 2011
OFFICE OF PETITIONS

In re Application of :
Steven L. REEDER, et al :
Application No. 11/981,400 : DECISION ON PETITION
Filed: October 31, 2007 :
Attorney Docket No. CUSTOM GLASS 007 :

This is a decision on the petition under the unintentional provisions of 37 CFR 1.137(b), filed April 27, 2011, to revive the above-identified application.

The petition is **GRANTED**.

The application became abandoned for failure to reply in a timely manner to the non-final Office action mailed, October 26, 2010, which set a shortened statutory period for reply of three (3) months. No extensions of time under the provisions of 37 CFR 1.136(a) were obtained. Accordingly, the application became abandoned on January 27, 2011.

The petition satisfies the requirements of 37 CFR 1.137(b) in that petitioner has supplied (1) the reply in the form of an amendment; (2) the petition fee of $810; and (3) a proper statement of unintentional delay.

An extension of time under 37 CFR 1.136 must be filed prior to the expiration of the maximum extendable period for reply. *See* In re Application of S., 8 USPQ2d 1630, 1631 (Comm'r Pats. 1988). Since the $555 extension of time fee submitted with the petition on April 27, 2011, was subsequent to the maximum extendable period for reply, petitioner may request a refund of this fee by writing to the following address: Mail Stop 16, Commissioner for Patents, P. O. Box 1450, Alexandria, VA 22313-1450. A copy of this decision should accompany petitioner's request.

Telephone inquiries concerning this decision should be directed to the undersigned at (571) 272-6735.

This application is being referred to Technology Center AU 3635 for appropriate action by the Examiner in the normal course of business.

/Diane C. Goodwyn/
Diane C. Goodwyn
Petitions Examiner
Office of Petitions

UNITED STATES PATENT AND TRADEMARK OFFICE

Commissioner for Patents
United States Patent and Trademark Office
P.O. Box 1450
Alexandria, VA 22313-1450
www.uspto.gov

Clise, Billion & Cyr, P.A.
605 U.S. Highway 169, Suite 300
Plymouth, MN 55441

MAILED
NOV 16 2010
OFFICE OF PETITIONS

In re Application of	:	
Andrew H. CRAGG, et *al.*	:	
Application No. 11/981,413	:	DECISION GRANTING PETITION
Filed: October 31, 2007	:	UNDER 37 CFR 1.313(c)(2)
Attorney Docket No. **1003-004-CON1**	:	

This is a decision on the petition under 37 CFR 1.313(c)(2), filed November 10, 2010, to withdraw the above-identified application from issue after payment of the issue fee.

The petition is **GRANTED**.

The above-identified application is withdrawn from issue for consideration of a submission under 37 CFR 1.114 (request for continued examination). *See* 37 CFR 1.313(c)(2).

Petitioner is advised that the issue fee paid on October 18, 2010 cannot be refunded. If, however, this application is again allowed, petitioner may request that it be applied towards the issue fee required by the new Notice of Allowance.[1]

Telephone inquiries should be directed to the undersigned at (571) 272-7253.

This application is being referred to Technology Center AU 3775 for processing of the request for continued examination under 37 CFR 1.114 and for consideration of the concurrently filed information disclosure statement.

/Monica A. Graves/
Petitions Examiner, Office of Petitions

[1] *The request to apply the issue fee to the new Notice may be satisfied by completing and returning the new Part B – Fee(s) Transmittal Form (along with any balance due at the time of submission). Petitioner is advised that the Issue Fee Transmittal Form* ***must*** *be completed and timely submitted to avoid abandonment of the application.*

SPE RESPONSE FOR CERTIFICATE OF CORRECTION

DATE : 8/17/2012

TO SPE OF : ART UNIT 2117 Gaffin Jeffrey (SPE)

SUBJECT : Request for Certificate of Correction for Appl. No.: 11/981461 Patent No.: 8015499

CofC mailroom date: _____

Please respond to this request for a certificate of correction within 7 days.

FOR IFW FILES:

Please review the requested changes/corrections as shown in the **COCIN** document(s) in the IFW application image. No new matter should be introduced, nor should the scope or meaning of the claims be changed.

Please complete the response (see below) and forward the completed response to scanning using document code **COCX**.

FOR PAPER FILES:

Please review the requested changes/corrections as shown in the attached certificate of correction. Please complete this form (see below) and forward it with the file to:

Certificates of Correction Branch (CofC)
Randolph Square – 9D10-A
Palm Location 7580

Note: _____

Certificates of Correction Branch

571-272-8680 _____

Thank You For Your Assistance

The request for issuing the above-identified correction(s) is hereby:

Note your decision on the appropriate box.

- ☒ **Approved** — **All** changes apply.
- ☐ **Approved in Part** — Specify below which changes do not apply.
- ☐ **Denied** — State the reasons for denial below.

Comments: _____

SPE

2117
Art Unit

PTOL-306 (REV. 7/03)

U.S. DEPARTMENT OF COMMERCE Patent and Trademark Office

UNITED STATES PATENT AND TRADEMARK OFFICE

Commissioner for Patents
United States Patent and Trademark Office
P.O. Box 1450
Alexandria, VA 22313-1450
www.uspto.gov

JOHN S. PRATT, ESQ
KILPATRICK STOCKTON, LLP
1100 PEACHTREE STREET
SUITE 2800
ATLANTA GA 30309

MAILED
AUG 02 2010
OFFICE OF PETITIONS

In re Patent No. 7,608,451 :
Issue Date: October 27, 2009 :
Application No. 11/981,574 : DECISION ON PETITION
Filed: October 31, 2007 :
Attorney Docket No. 51687-350500 (0102CON) :

This is a decision on the Request To Correct Assignee Under 37 C.F.R. §3.81(b) And Request For Certificate Of Correction, filed July 1, 2010, which is being treated as a Petition Under 37 CFR §3.81(b), to correct the first and second assignees' names. A completed Certificate of Correction Form (PTO/SB/44) was submitted with Petition.

The petition under 37 CFR §3.81(b) is **GRANTED**.

Petitioner urges that the present Petition was submitted to correct the first and second assignees' names on the previously submitted PTOL-85B and such error was inadvertent. Accordingly, petitioner requests that a Certificate of Correction (PTO/SB/44) be issued to correct the first and second assignees' names to the Title Page of the Letters Patent.

37 CFR 3.81(b), effective June 25, 2004, reads:

> *After payment of the issue fee:* Any request for issuance of an application in the name of the assignee submitted after the date of payment of the issue fee, and any request for a patent to be corrected to state the name of the assignee, must state that the assignment was submitted for recordation as set forth in § 3.11 before issuance of the patent, and must include a request for a certificate of correction under § 1.323 of this chapter (accompanied by the fee set forth in § 1.20(a) and the processing fee set forth in § 1.17(i) of this chapter.

The requisite $130.00 processing fee (Fee Code 1464) as set forth under 37 CFR 1.17(i) has been submitted. However, the $100.00 fee (Fee Code 1811), as set forth under 37 CFR 1.20(a), was accompanied deposit account authorization to charge any required fees. As such, the fee has been charged as authorized. Further, Office assignment records are consistent with the requested correction. Accordingly, since the Petition complies with the provisions of 37 CFR 3.81(b), it is appropriate for the Office to issue a Certificate of Correction in accordance with the content of the Form PTO/SB/44 that accompanied the petition.

Inquiries related this communication should be directed to the undersigned at (571)272-3213.

Any questions concerning the issuance of a Certificate of Correction should be directed to the Certificates of Correction Branch at (571) 272-4200.

This matter is being referred to the Certificates of Correction Branch for processing of a Certificate of Correction in U.S. Patent No. 7,608,451.

Cheryl Gibson-Baylor

Cheryl Gibson-Baylor
Petitions Examiner
Office of Petitions

UNITED STATES PATENT AND TRADEMARK OFFICE

Commissioner for Patents
United States Patent and Trademark Office
P.O. Box 1450
Alexandria, VA 22313-1450
www.uspto.gov

THOMAS J. PERKOWSKI, ESQ. P.C.
22 THORNDAL CIRCLE
DARIEN, CT 06820

MAILED

OCT 31 2011

OFFICE OF PETITIONS

In re Application of
John E. Kidwell et al
Application No. 11/981,614
Filed: October 31, 2007
Attorney Docket No. 110-017USANH0

DECISION GRANTING PETITION
UNDER 37 CFR 1.313(c)(2)

This is a decision on the petition under 37 CFR 1.313(c)(2), filed, October 27, 2011 to withdraw the above-identified application from issue after payment of the issue fee.

The petition is **GRANTED**.

The above-identified application is withdrawn from issue for consideration of a submission under 37 CFR 1.114 (request for continued examination). *See* 37 CFR 1.313(c)(2).

Petitioner is advised that the issue fee paid on August 24, 2011 in the above-identified application cannot be refunded. If, however, the above-identified application is again allowed, petitioner may request that it be applied towards the issue fee required by the new Notice of Allowance.[1]

Telephone inquiries should be directed to Irvin Dingle at (571) 272-3210.

This matter is being referred to Technology Center AU 3784 for processing of the request for continued examination under 37 CFR 1.114 and for consideration of the concurrently filed Information Disclosure Statement.

/Irvin Dingle/
Irvin Dingle
Petitions Examiner
Office of Petitions

[1] The request to apply the issue fee to the new Notice may be satisfied by completing and returning the new Issue Fee Transmittal Form PTOL-85(b), which includes the following language thereon: Commissioner for Patents is requested to apply the Issue Fee and Publication Fee (if any) or re-apply any previously paid issue fee to the application identified above. Petitioner is advised that, whether a fee is indicated as being due or not, the Issue Fee Transmittal Form **must** be completed and timely submitted to avoid abandonment. Note the language in bold text on the first page of the Notice of Allowance and Fee(s) Due (PTOL-85).

UNITED STATES PATENT AND TRADEMARK OFFICE

Commissioner for Patents
United States Patent and Trademark Office
P.O. Box 1450
Alexandria, VA 22313-1450
www.uspto.gov

FINNEGAN, HENDERSON, FARABOW, GARRETT & DUNNER LLP
901 NEW YORK AVENUE, NW
WASHINGTON DC 20001-4413

MAILED
SEP 29 2011
OFFICE OF PETITIONS

In re Application of	: DECISION ON APPLICATION FOR
Boyle, et al.	: PATENT TERM ADJUSTMENT
Application No. 11/981,664	:
Filed: October 30, 2007	:
Dkt. No.: 06843.0049-01000	:

This is a decision on the petition filed on September 23, 2011 requesting that the patent term adjustment, as indicated on the Determination of Patent Term Adjustment, be corrected to indicate that as of the time of allowance, the application is entitled to a patent term adjustment of 142 days.

The petition to correct the patent term adjustment indicated on Determination of Patent Term Adjustment to indicate that the patent term adjustment to date is 142 days is **GRANTED**.

The Office acknowledges receipt of the $200.00 fee set forth in 37 CFR 1.18(e). No additional fees are required.

The application file is being forwarded to the Office of Data Management for issuance of the patent. The patent term adjustment indicated on the patent (as shown on the Issue Notification mailed about three weeks prior to patent issuance) will include any additional adjustment accrued both for Office delay in issuing the patent more than four months after payment of the issue fee and satisfaction of all outstanding requirements, and for the Office taking in excess of three years to issue the patent (to the extent that the three-year period does not overlap with periods already accorded).

Attached please find copy of the adjusted PAIR calculation.

Telephone inquiries specific to this matter should be directed to the undersigned at (571) 272-3205.

/ALESIA M. BROWN/

Alesia M. Brown
Attorney Advisor
Office of Petitions

Enclosure

Patent Term Adjustments

PTA/PTE Information | Patent Term Adjustment | Patent Term Extension

Application Number*: 11981664 Search | Explanation of PTA Calculation | Explanation of PTE Calculation

PTA Calculations for Application: 11981664

Application Filing Date	10/30/2007	OverLapping Days Between (A and B) or (A and C)	0
Issue Date of Patent		Non-Overlapping USPTO Delays:	246
A Delays	246	PTO Manual Adjustment	56
B Delays	0	Applicant Delay (APPL)	160
C Delays	0	Total PTA (days)	142

* - Sorted Column

File Contents History

Action Number	Action Recorded Date	Action Due Date	Action Code	Action Description	Duration PTO	Duration APPL	Parent Action Number
100	09/27/2011		P028	Adjustment of PTA Calculation by PTO	56		0
77	06/24/2011		MN/=.	Mail Notice of Allowance			0
76	06/23/2011		OAR	Office Action Review			0
75	06/23/2011		OAR	Office Action Review			0
74	06/23/2011		IREV	Issue Revision Completed			0
73	06/23/2011		DVER	Document Verification			0
72	06/23/2011		N/=.	Notice of Allowance Data Verification Completed			0
71	06/23/2011		DOCK	Case Docketed to Examiner in GAU			0
70	06/23/2011		EX.R	Reasons for Allowance			0
69	06/23/2011		CNTA	Allowability Notice			0
68	06/22/2011		MEXIN	Mail Examiner Interview Summary (PTOL - 413)			0
67	06/21/2011		P574	Paralegal TD Accepted			0
65	06/20/2011		OAR	Office Action Review			0
64	06/20/2011		OAR	Office Action Review			0
66	06/17/2011	04/22/2011	DIST	Terminal Disclaimer Filed		56	57
63	06/17/2011		EXIN	Examiner Interview Summary Record (PTOL - 413)			0
58	04/25/2011		FWDX	Date Forwarded to Examiner			0
62	04/22/2011		IDSC	Information Disclosure Statement considered			0
61	04/22/2011		C602	Oath or Declaration Filed (Including Supplemental)			0
60	04/22/2011		RCAP	Reference capture on IDS			0
59	04/22/2011		M844	Information Disclosure Statement (IDS) Filed			0
57	04/22/2011	02/28/2011	A...	Response after Non-Final Action		53	53
56	04/22/2011		XT/G	Request for Extension of Time - Granted			0
54	04/22/2011		WIDS	Information Disclosure Statement (IDS) Filed			0
53	11/29/2010		MCTNF	Mail Non-Final Rejection			0
52	11/24/2010		CTNF	Non-Final Rejection			0
49	11/18/2010		FWDX	Date Forwarded to Examiner			0
48	11/17/2010		A.NE	Amendment after Final Rejection			0
51	09/23/2010		IDSC	Information Disclosure Statement considered			0
47	09/23/2010		M844	Information Disclosure Statement (IDS) Filed			0
46	09/23/2010		WIDS	Information Disclosure Statement (IDS) Filed			0
50	08/27/2010		IDSC	Information Disclosure Statement considered			0
45	08/27/2010		M844	Information Disclosure Statement (IDS) Filed			0
44	08/27/2010		WIDS	Information Disclosure Statement (IDS) Filed			0
43	08/17/2010		MCTFR	Mail Final Rejection (PTOL - 326)			0
42	08/16/2010		CTFR	Final Rejection			0
37	06/29/2010		FWDX	Date Forwarded to Examiner			0
41	06/25/2010		IDSC	Information Disclosure Statement considered			0
36	06/25/2010	05/05/2010	A...	Response after Non-Final Action		51	29
35	06/25/2010		XT/G	Request for Extension of Time - Granted			0
34	06/25/2010		RCAP	Reference capture on IDS			0
33	06/25/2010		M844	Information Disclosure Statement (IDS) Filed			0
32	06/25/2010		WIDS	Information Disclosure Statement (IDS) Filed			0
29	02/05/2010		MCTNF	Mail Non-Final Rejection			0
28	02/03/2010		CTNF	Non-Final Rejection			0
22	12/05/2009		FWDX	Date Forwarded to Examiner			0
21	12/02/2009		ELC.	Response to Election / Restriction Filed			0
20	12/02/2009		XT/G	Request for Extension of Time - Granted			0
19	11/05/2009		PG-ISSUE	PG-Pub Issue Notification			0
18	09/02/2009	12/30/2008	MCTRS	Mail Restriction Requirement	246		0.5
17	08/31/2009		CTRS	Restriction/Election Requirement			0
16	08/18/2009		DOCK	Case Docketed to Examiner in GAU			0
14	07/30/2009		OIPE	Application Dispatched from OIPE			0
13	07/30/2009		FLRCPT.U	Filing Receipt - Updated			0
15	07/23/2009		CRFE	CRF Is Good Technically / Entered into Database			0
24	10/08/2008		IDSC	Information Disclosure Statement considered			0
7	10/08/2008		WIDS	Information Disclosure Statement (IDS) Filed			0
23	07/03/2008		IDSC	Information Disclosure Statement considered			0
6	07/03/2008		WIDS	Information Disclosure Statement (IDS) Filed			0
31	02/12/2008		A.PE	Preliminary Amendment			0
12	02/12/2008		FLFEE	Payment of additional filing fee/Preexam			0
9	02/12/2008		SEQLIST	A set of symbols and procedures, provided to the PTO on a set of computer listings, that describe in			0
8	02/12/2008		CORRDRW	Applicant has submitted new drawings to correct Corrected Papers problems			0
5	12/12/2007		INCD	Notice Mailed--Application Incomplete--Filing Date Assigned			0
4	12/12/2007		FLRCPT.O	Filing Receipt			0
3	11/19/2007		L194	Cleared by OIPE CSR			0
2	11/11/2007		SCAN	IFW Scan & PACR Auto Security Review			0
1	11/01/2007		IEXX	Initial Exam Team nn			0

0.5	10/30/2007	EFILE	Filing date	0

Export to: Excel

UNITED STATES PATENT AND TRADEMARK OFFICE

Commissioner for Patents
United States Patent and Trademark Office
P.O. Box 1450
Alexandria, VA 22313-1450
www.uspto.gov

MAILED

JAN 30 2012

OFFICE OF PETITIONS

FINNEGAN, HENDERSON, FARABOW, GARRETT & DUNNER LLP
901 NEW YORK AVENUE, NW
WASHINGTON DC 20001-4413

In re Patent No. 8,058,418	: DECISION ON PATENT TERM
Issued: November 15, 2011	: ADJUSTMENT and NOTICE OF INTENT
Application No. 11/981,664	: TO ISSUE CERTIFICATE OF
Filed: October 30, 1997	: CORRECTION
Dkt. No.: 06843.0049-01000	:

This is a decision on the petition filed on January 13, 2012 requesting that the patent term adjustment indicated on the above-identified patent be corrected to indicate that the term of the above-identified patent is extended or adjusted by 523 days.

The petition to correct the patent term adjustment indicated on the above-identified patent to indicate that the term of the above-identified patent is extended or adjusted by 523 days is **GRANTED**.

The Office acknowledges the submission of the $200.00 fee set forth in 37 CFR 1.18(e). No additional fees are required.

The application is being forwarded to the Certificates of Corrections Branch for issuance of a certificate of correction. The Office will issue a certificate of correction indicating that the term of the above-identified patent is extended or adjusted by 523 days.

Nothing in this decision shall be construed as a waiver of the requirement of 35 U.S.C. 154(b)(4) that any civil action by an applicant dissatisfied with a determination made by the Director under 35 U.S.C. 154(b)(3) be filed in the United States District Court for the District of Columbia within 180 days after the grant of the patent.

Telephone inquiries specific to this matter should be directed to the undersigned at (571) 272-3205.

/ALESIA M. BROWN/

Alesia M. Brown
Attorney Adviser
Office of Petitions

Enclosure: Copy of DRAFT Certificate of Correction

UNITED STATES PATENT AND TRADEMARK OFFICE

CERTIFICATE OF CORRECTION

PATENT : 8,058,418

DATED : November 15, 2011 **DRAFT**

INVENTOR(S) : Boyle, et al.

It is certified that error appears in the above-identified patent and that said Letters Patent is hereby corrected as shown below:

On the cover page,

[*] Notice: Subject to any disclaimer, the term of this patent is extended or adjusted under 35 USC 154(b) by 504 days

Delete the phrase "by 504 days" and insert – by 523 days--

UNITED STATES PATENT AND TRADEMARK OFFICE

UNITED STATES DEPARTMENT OF COMMERCE
United States Patent and Trademark Office
Address: COMMISSIONER FOR PATENTS
P.O. Box 1450
Alexandria, Virginia 22313-1450
www.uspto.gov

APPLICATION NO.	FILING DATE	FIRST NAMED INVENTOR	ATTORNEY DOCKET NO.	CONFIRMATION NO.
11/981,697	10/30/2007	Ken S. Fisher	SSI-044 (991028)	8013

61139 7590 09/23/2011
SHOTSPOTTER, INC. C/O DLA Piper US LLP
Attn: Andrew Schwaab
2000 University Avenue
East Palo Alto, CA 94303

EXAMINER
NGUYEN, PHUNG

ART UNIT	PAPER NUMBER
2612	

MAIL DATE	DELIVERY MODE
09/23/2011	PAPER

Please find below and/or attached an Office communication concerning this application or proceeding.

The time period for reply, if any, is set in the attached communication.

Inventorship

1. In view of the papers filed on October 26, 2009, it has been found that this nonprovisional application, as filed, through error and without deceptive intent, improperly set forth the inventorship, and accordingly, this application has been corrected in compliance with 37 CFR 1.48(a). The inventorship of this application has been changed by adding Fred Holmes.

The application will be forwarded to the Office of Initial Patent Examination (OIPE) for issuance of a corrected filing receipt, and correction of Office records to reflect the inventorship as corrected.

Any inquiry concerning this communication should be directed to DANIEL WU at telephone number (571)272-2964.

/DANIEL WU/
Supervisory Patent Examiner, Art Unit 2612

SPE RESPONSE FOR CERTIFICATE OF CORRECTION

DATE : 10/19/2011

TO SPE OF : ART UNIT 3651

SUBJECT : Request for Certificate of Correction for Appl. No.: 11/981752 Patent No.: 7857116B2

CofC mailroom date: 10/10/2011

Please respond to this request for a certificate of correction within 7 days.

COCX

FOR IFW FILES:

Please review the requested changes/corrections as shown in the **COCIN** document(s) in the IFW application image. No new matter should be introduced, nor should the scope or meaning of the claims be changed.

Please complete the response (see below) and forward the completed response to scanning using document code **COCX**.

FOR PAPER FILES:

Please review the requested changes/corrections as shown in the attached certificate of correction. Please complete this form (see below) and forward it with the file to:

Certificates of Correction Branch (CofC)
Randolph Square – 9D10-A
Palm Location 7580

Note: _____

_____

Virginia Tolbert

Certificates of Correction Branch

(571) 272-0460

Thank You For Your Assistance

The request for issuing the above-identified correction(s) is hereby:
Note your decision on the appropriate box.

- [x] **Approved** — All changes apply.
- [ ] **Approved in Part** — Specify below which changes **do not** apply.
- [ ] **Denied** — State the reasons for denial below.

Comments: _____

J Pridwell

SPE

3651

Art Unit

UNITED STATES PATENT AND TRADEMARK OFFICE

Commissioner for Patents
United States Patent and Trademark Office
P.O. Box 1450
Alexandria, VA 22313-1450
www.uspto.gov

ROPES & GRAY LLP
PATENT DOCKETING 39/361
1211 AVENUE OF THE AMERICAS
NEW YORK NY 10036-8704

MAILED

SEP 30 2010

OFFICE OF PETITIONS

In re Application :
Douglas Charles Hanson et al. :
Application No. 11/981,810 : DECISION ON APPLICATION
Filed: October 31, 2007 : FOR PATENT TERM ADJUSTMENT
Attorney Docket No. **000659-0030-105** :

This is in response to the "APPLICATION FOR PATENT TERM ADJUSTMENT" filed April 13, 2010. Applicant requests that the determination of patent term adjustment be corrected from 106 days to 135 days.

The application for patent term adjustment is **DISMISSED**.

On January 13, 2010, the Office mailed the Determination of Patent Term Adjustment under 35 U.S.C. 154(b) in the above-identified application. The Notice stated that the patent term adjustment (PTA) to date is 106 days. The instant application for patent term adjustment was timely filed[1]. Applicants dispute the reduction of 29 days of PTA pursuant to 1.704(c)(7) for the filing of a response to the Notice to File Missing Parts on June 4, 2008.

Applicants argue that in response to the Notice to File Missing Parts mailed February 6, 2008, replacement drawings in compliance with 37 C.F.R. §§ 1.84 and 1.121(d) were submitted on April 7, 2008. However, a Notice of Incomplete Reply was mailed April 25, 2008 to which applicants argue, while some vertical and horizontal line marks are visible in the April 7, 2008 replacement drawings as shown on PAIR, according to applicants' records, these marks were not present on the replacement drawings as filed. Applicants believe that the marks were introduced upon scanning at the USPTO. Accordingly, the Notice of Incomplete Reply was issued in error, and thus no loss of PTA should have occurred.

Applicant's arguments have been considered, but not found to be persuasive. Pursuant to 37 CFR § 1.704(c), circumstances that constitute a failure of the applicant to engage in reasonable efforts to conclude processing or examination of an application also include the following circumstances, which will result in the following reduction of the

[1] PALM records indicate that the Issue Fee was also received on April 13, 2010.

period of adjustment set forth in § 1.703 to the extent that the periods are not overlapping:

> (7) Submission of a reply having an omission (§1.135(c)), in which case the period of adjustment set forth in § 1.703 shall be reduced by the number of days, if any, beginning on the day after the date the reply having an omission was filed and ending on the date that the reply or other paper correcting the omission was filed;

The record does not support a conclusion that the drawings filed in response to the Notice to File Missing Parts were complete or that the Notice of Incomplete Reply was errorneously mailed.

In view thereof, it is concluded that the determination of patent term adjustment at the time of the mailing of the Notice of Allowance is 106 days.

Receipt of the $200.00 fee set forth in 37 CFR 1.18(e) is acknowledged. No additional fees are required.

The application is being forwarded to the Office of Data Management for issuance of the patent. The patent term adjustment indicated on the patent (as shown on the Issue Notification mailed about three weeks prior to patent issuance) will include any additional adjustment accrued both for Office delay in issuing the patent more than four months after payment of the issue fee and satisfaction of all outstanding requirements, and for the Office taking in excess of three years to issue the patent (to the extent that the three-year period does not overlap with periods already accorded).

Telephone inquiries specific to this decision should be directed to the undersigned Petitions Attorney at (571) 272-3212.

Patricia Faison-Ball

Patricia Faison-Ball
Senior Petitions Attorney
Office of Petitions

UNITED STATES PATENT AND TRADEMARK OFFICE

Commissioner for Patents
United States Patent and Trademark Office
P.O. Box 1450
Alexandria, VA 22313-1450
www.uspto.gov

ROPES & GRAY LLP
PATENT DOCKETING 39/361
1211 AVENUE OF THE AMERICAS
NEW YORK NY 10036-8704

MAILED

JUN 2 0 2011

OFFICE OF PETITIONS

In re Patent No. 7,824,679
Issued: November 2, 2010
Application No. 11/981,810
Filed: October 31, 2007
Attorney Docket No. **000659-0030-105**

:DECISION ON REQUEST
: FOR RECONSIDERATION
: OF PATENT TERM ADJUSTMENT
: AND
: NOTICE OF INTENT TO ISSUE
: CERTIFICATE OF CORRECTION

This is in response to the "REQUEST FOR RECONSIDERATION OF PATENT TERM ADJUSTMENT" filed November 30, 2010. Applicant requests that the determination of patent term adjustment be corrected from 160 days to 216 days. Since the patent has now issued, the request is being treated under 37 CFR 1.705(d).

The petition is **GRANTED** to the extent indicated herein.

The patent term adjustment indicated on the patent is to be corrected by issuance of a certificate of correction showing a revised Patent Term Adjustment of one hundred eighty-nine **(189)** days.

On January 13, 2010, the Office mailed the Determination of Patent Term Adjustment under 35 U.S.C. 154(b) in the above-identified application. The Notice stated that the patent term adjustment (PTA) to date is 106 days. On April 13, 2010 a timely filed[1] request for reconsideration of patent term adjustment (with required fee), asserted that the correct number of days of PTA at the time of the mailing of the Notice of Allowance was 135 days. Applicants disputed the reduction of twenty-nine (29) days of PTA pursuant to 37 CFR 1.704(c)(7) for the filing of a response to the Notice to File Missing Parts on June 4, 2008. A decision mailed September 30, 2010 dismissed the request because the record did not support a conclusion that the drawings filed in response to the Notice to File Missing Parts were complete or that the Notice of Incomplete Reply was errorneously mailed. Thus the reduction pursuant to 37 CFR 1.704(c)(7) was appropriate.

On November 2, 2010 the application matured into U.S. Patent No. 7,824,679 with a revised PTA thereon of 160 days. Patentee renews the argument and disputes the reduction of 29 days of PTA pursuant to 1.704(c)(7) for the filing of a response to the

[1] PALM records indicate that the Issue Fee was also received on April 13, 2010.

Notice to File Missing Parts on June 4, 2008 and also disputes the reduction of twenty-seven (27) days attributed to patentee for the submission of a paper filed January 19, 2010 after the Notice of Allowance was mailed.

Applicant's argument with respect to the reduction pursuant to 37 CFR 1.704(c)(7) has been reconsidered. In this instance, as it relates to the replacement drawings as filed, the reduction of 29 days has been removed. Applicants are cautioned however when submitting drawings that the drawings are compliant and free from erasures and other markings.

A review of the file reveals that 27 days was deducted for applicant delay for the filing of the IDS on February 10, 2010, pursuant to 37 C.F.R. § 1.704(c)(10) as the IDS was filed after the mailing of the Notice of Allowance on January 13, 2010. Applicant's argument that the reduction is in error has been considered but is not found to be persuasive.

37 CFR § 1.704(c)(10) provides that:

> Submission of an amendment under § 1.312 or other paper after a notice of allowance has been given or mailed, in which case the period of adjustment set forth in § 1.703 shall be reduced by the lesser of:
> (i) The number of days, if any, beginning on the date the amendment under § 1.312 or other paper was filed and ending on the mailing date of the Office action or notice in response to the amendment under § 1.312 or such other paper;
> or
> (ii) Four months;

The reduction has been considered a proper a basis for reduction of patent term adjustment pursuant to § 1.704(c)(10).

As stated in MPEP 2732:

> 37 CFR 1.704(c)(10) establishes submission of an amendment under 37 CFR 1.312 or other paper after a notice of allowance has been given or mailed as a circumstance that constitutes a failure of an applicant to engage in reasonable efforts to conclude processing or examination of an application. The submission of amendments (or other papers) after an application is allowed may cause substantial interference with the patent issue process.
>
> Certain papers filed after allowance are not considered to be a failure to engage in reasonable efforts to conclude processing or examination of an application. See *Clarification of 37 CFR 1.704(c)(10) – Reduction of Patent Term Adjustment*

for Certain Types of Papers Filed After a Notice of Allowance has been Mailed, 1247 Off. Gaz. Pat. Office 111 (June 26, 2001). The submission of the following papers after a "Notice of Allowance" is not considered a failure to engage in reasonable efforts to conclude processing or examination of an application: (1) Fee(s) Transmittal (PTOL-85B); (2) Power of Attorney; (3) Power to Inspect; (4) Change of Address; (5) Change of Status (small/not small entity status); (6) a response to the examiner's reasons for allowance or a request to correct an error or omission in the "Notice of Allowance" or "Notice of Allowability;" and (7) letters related to government interests (e.g., those between NASA and the Office). Papers that will be considered a failure to engage in reasonable efforts to conclude processing or examination of an application include: (1) a request for a refund; (2) a status letter; (3) amendments under 37 CFR 1.312; (4) late priority claims; (5) a certified copy of a priority document; (6) drawings; (7) letters related to biologic deposits; and (8) oaths or declarations.

The Office acknowledges submission of the $200.00 fee set forth in 37 CFR 1.18(e) with the previously filed petition on November 30, 2010. No additional fees are required.

The application file is being forwarded to the Certificates of Correction Branch for issuance of a certificate of correction in order to rectify this error. The certificate of correction will indicate that the term of the above-identified patent is extended or adjusted by ONE HUNDRED EIGHTY-NINE (189) days.

Telephone inquiries specific to this decision should be directed to the undersigned Petitions Attorney at (571) 272-3212.

Patricia Faison-Ball

Patricia Faison-Ball
Senior Petitions Attorney
Office of Petitions

Enclosure: Copy of DRAFT Certificate of Correction

DRAFT

UNITED STATES PATENT AND TRADEMARK OFFICE

CERTIFICATE OF CORRECTION

PATENT : 7,824,679 B2

DATED : November 2, 2010

INVENTOR(S) : Douglas Charles Hanson

It is certified that error appears in the above-identified patent and that said Letters Patent is hereby corrected as shown below:

On the cover page,

[*] Notice: Subject to any disclaimer, the term of this patent is extended or adjusted under 35 USC 154(b) by (160) days

Delete the phrase "by 160 days" and insert – by 189 days--

UNITED STATES PATENT AND TRADEMARK OFFICE

Commissioner for Patents
United States Patent and Trademark Office
P.O. Box 1450
Alexandria, VA 22313-1450
www.uspto.gov

ROPES & GRAY LLP
PATENT DOCKETING 39/361
1211 AVENUE OF THE AMERICAS
NEW YORK NY 10036-8704

MAILED

SEP 07 2011

OFFICE OF PETITIONS

In re Patent No. 7,824,679	:
Issued: November 2, 2010	: DECISION ON REQUEST FOR
Application No. 11/981,810	: RECONSIDERATION OF
Filed: October 31, 2007	: PATENT TERM ADJUSTMENT
Attorney Docket No. **000659-0030-105**	:

This is in response to the "REQUEST FOR RECONSIDERATION OF PATENT TERM ADJUSTMENT" filed August 22, 2011. Applicant requests that the determination of patent term adjustment be corrected from 189 days to 216 days. The request is being treated under 37 CFR 1.705(d).

The request for review of the patent term adjustment is **DISMISSED.**

On November 30, 2010, patentee filed a REQUEST FOR RECONSIDERATION OF PATENT TERM ADJUSTMENT. Amongst other arguments, Patentee argued that a period of 27 days should not be charged Applicant for the filing of a Supplemental Information Disclosure Statement (IDS) after the mailing of the Notice of Allowance.

Patentees argued that the documents in the February 10, 2010 IDS were filed out of an abundance of caution to ensure full compliance with 37 C.F.R. § 1.56. As stated in MPEP § 2001.06(b), "individuals covered by 37 CFR 1.56 have a duty to bring to the attention of the examiner .... information within their knowledge as to other co-pending United States applications which are "material to patentability' of the application in question."

Patentee's argument was considered but not found to be persuasive and thus the petition was dismissed in a decision mailed June 20, 2011, wherein the decision granted the petition under 37 CFR 1.705(d) to the extent that a certificate of correction would be issued indicating that the term of the patent was extended or adjusted by 189 days, but not as it relates to the 37 C.F.R. § 1.704(c)(10)[1] dispute, because the IDS was filed after the mailing of the Notice of Allowance.

---

[1] 37 CFR § 1.704(c)(10) provides that:

Submission of an amendment under § 1.312 or other paper after a notice of allowance has been given or mailed, in which case the period of adjustment set forth in § 1.703 shall be reduced by the lesser of:
(i) The number of days, if any, beginning on the date the amendment under § 1.312 or other paper was filed and ending on the mailing date of the Office action or notice in response to the amendment under § 1.312 or such other paper;
or
(ii) Four months;

Patentee renews the argument.

The filing of the IDS "out of an abundance of caution" does not make the filing of the paper one which falls within the category of papers that are an exception to the rule.[2] Patentee's request has been re-considered. As no new arguments have been presented, the patent term adjustment is 189 days as previously indicated.

Patentees are given **one (1) month or thirty (30) days**, whichever is longer, from the mail date of this decision to respond. No extensions of time will be granted under § 1.136.

Telephone inquiries specific to this decision should be directed to the undersigned Petitions Attorney at (571) 272-3212.

Patricia Faison-Ball

Patricia Faison-Ball
Senior Petitions Attorney
Office of Petitions

---

[2]MPEP 2732:

37 CFR 1.704(c)(10) establishes submission of an amendment under 37 CFR 1.312 or other paper after a notice of allowance has been given or mailed as a circumstance that constitutes a failure of an applicant to engage in reasonable efforts to conclude processing or examination of an application. The submission of amendments (or other papers) after an application is allowed may cause substantial interference with the patent issue process.

Certain papers filed after allowance are not considered to be a failure to engage in reasonable efforts to conclude processing or examination of an application. See *Clarification of 37 CFR 1.704(c)(10) – Reduction of Patent Term Adjustment for Certain Types of Papers Filed After a Notice of Allowance has been Mailed*, 1247 Off. Gaz. Pat. Office 111 (June 26, 2001). The submission of the following papers after a "Notice of Allowance" is not considered a failure to engage in reasonable efforts to conclude processing or examination of an application: (1) Fee(s) Transmittal (PTOL-85B); (2) Power of Attorney; (3) Power to Inspect; (4) Change of Address; (5) Change of Status (small/not small entity status); (6) a response to the examiner's reasons for allowance or a request to correct an error or omission in the "Notice of Allowance" or "Notice of Allowability;" and (7) letters related to government interests (e.g., those between NASA and the Office). Papers that will be considered a failure to engage in reasonable efforts to conclude processing or examination of an application include: (1) a request for a refund; (2) a status letter; (3) amendments under 37 CFR 1.312; (4) late priority claims; (5) a certified copy of a priority document; (6) drawings; (7) letters related to biologic deposits; and (8) oaths or declarations.

UNITED STATES PATENT AND TRADEMARK OFFICE

Commissioner for Patents
United States Patent and Trademark Office
P.O. Box 1450
Alexandria, VA 22313-1450
www.uspto.gov

ROHM AND HAAS COMPANY
PATENT DEPARTMENT
100 INDEPENDENCE MALL WEST
PHILADELPHIA PA 19106-2399

MAILED

MAY 06 2011

OFFICE OF PETITIONS

In re Application of	:	
Dean Edward HOY et al.	:	
Application No. 11/981,898	:	DECISION ON PETITION
Filed: November 01, 2007	:	
Attorney Docket No. A01866	:	

This is a decision on the petition under the unintentional provisions of 37 CFR 1.137(b), filed March 24, 2011, to revive the above-identified application.

The petition is **GRANTED**.

The application became abandoned for failure to timely file a reply within the meaning of 37 CFR 1.113 to the final Office action of September 22, 2010. The proposed reply required for consideration of a petition to revive must be a Notice of Appeal (and appeal fee required by 37 CFR 41.20(b)(2), an amendment that *prima facie* places the application in condition for allowance, a Request for Continued Examination and submission (37 CFR 1.114), or the filing of a continuing application under 37 CFR 1.53(b). See MPEP 711.03(c)(III)(A)(2). A two (2) month extension of time pursuant to the provisions of 37 CFR 1.136(a) was obtained. Accordingly, the date of abandonment of this application is February 23, 2010.

The petition satisfies the requirements of 37 CFR 1.137(b) in that petitioner has supplied (1) the reply in the form of a Request for Continued Examination (RCE) and fee of $810.00, and the submission required by 37 CFR 1.114; (2) the petition fee of $1,620.00; and (3) a proper statement of unintentional delay. Accordingly, the reply to the final Office action of September 22, 2010 is accepted as having been unintentionally delayed.

Telephone inquiries concerning this decision should be directed to the undersigned at (571) 272-4231.

This application is being referred to Technology Center AU 1764for processing of the RCE and for appropriate action by the Examiner in the normal course of business on the amendment submitted in accordance with 37 CFR 1.114.

Michelle R. Eason
Paralegal Specialist
Office of Petitions

OK TO ENTER: /T.M./

Atty. Dkt. No. 461494-0192

IN THE UNITED STATES PATENT AND TRADEMARK OFFICE

Applicant:	James D. Walters et al.	Filed Via EFS on February 24, 2011
Title:	CEILING MOUNTING SYSTEM	
Patent. No.:	7,883,067	
Issue Date:	2/8/2011	
Examiner:	Erin W. Smith	
Art Unit:	3632	
Confirmation Number:	1545	

REQUEST FOR CERTIFICATE OF CORRECTION PURSUANT TO 37 C.F.R. § 1.323

Commissioner for Patents
P.O. Box 1450
Alexandria, VA 22313-1450

Sir:

Enclosed, in duplicate, is a Certificate of Correction, Form PTO-SB/44, for United States Patent Number 7,883,067 issued February 8, 2011.

Applicant noticed a typographical error while proofreading the issued patent.

IN THE CLAIMS

Column 9, Claim 18, Line 24, "on" should be -- once --.

Applicant submits that the noted error does not constitute new matter, and correction thereof would not require reexamination.

Pursuant to 37 C.F.R. §1.323, Applicant requests that the enclosed Certificate of Correction be approved.

Since at least one of the noted errors is not the fault of the Patent Office, payment is enclosed of the required fee of $100.00.

The above-identified fees are being paid by credit card via EFS-Web.

The Commissioner is hereby authorized to charge any additional fees which may be required regarding this application under 37 C.F.R. §§ 1.16-1.17, or credit any overpayment, to Deposit Account No. 19-0741. Should no proper payment be enclosed herewith, as by the credit card payment instructions in EFS-Web being incorrect or absent, resulting in a rejected or incorrect credit card transaction, the Commissioner is authorized to charge the unpaid amount to Deposit Account No. 19-0741.

Respectfully submitted,

Date Feb 24, 2011

By

FOLEY & LARDNER LLP
Customer Number: 27433
Telephone: (312) 832-4358
Facsimile: (312) 832-4700

Marshall J. Brown
Attorney for Applicant
Registration No. 44,566

OK TO ENTER: /T.M./

MODIFIED PTO/SB/44 (04-05)
Approved for use through 04/30/2007. OMB 0651-0033
U.S. Patent and Trademark Office; U.S. DEPARTMENT OF COMMERCE
Under the Paperwork Reduction Act of 1995, no persons are required to respond to a collection of information unless it displays a valid OMB control number.
(Also Form PTO-1050)

UNITED STATES PATENT AND TRADEMARK OFFICE
CERTIFICATE OF CORRECTION

PATENT NO.	:	7,883,067
APPLICATION NO.	:	11/981899
DATED	:	2/8/2011
INVENTOR(S)	:	James Duane Walters; Matthew William Stifal

It is certified that an error appears or errors appear in the above-identified patent and that said Letters Patent is hereby corrected as shown below:

IN THE CLAIMS

Column 9, Claim 18, Line 24, "on" should be -- once --.

MAILING ADDRESS OF SENDER (Please do not use customer number below):

321 N Clark St
Suite 2800
Chicago, Illinois 60654-5313

This collection of information is required by 37 CFR 1.322, 1.323, and 1.324. The information is required to obtain or retain a benefit by the public which is to file (and by the USPTO to process) an application. Confidentiality is governed by 35 U.S.C. 122 and 37 CFR 1.14. This collection is estimated to take 1.0 hour to complete, including gathering, preparing, and submitting the completed application form to the USPTO. Time will vary depending upon the individual case. Any comments on the amount of time you require to complete this form and/or suggestions for reducing this burden, should be sent to the Chief Information Officer,
U.S. Patent and Trademark Office, U.S. Department of Commerce, P.O. Box 1450, Alexandria, VA 22313-1450. DO NOT SEND FEES OR COMPLETED FORMS TO THIS ADDRESS. SEND TO: **Attention Certificate of Corrections Branch, Commissioner for Patents, P.O. Box 1450, Alexandria, VA 22313-1450.**

If you need assistance in completing the form, call 1-800-PTO-9199 and select option 2.

OK TO ENTER: /T.M./

MODIFIED PTO/SB/44 (04-05)
Approved for use through 04/30/2007. OMB 0651-0033
U.S. Patent and Trademark Office; U.S. DEPARTMENT OF COMMERCE
Under the Paperwork Reduction Act of 1995, no persons are required to respond to a collection of information unless it displays a valid OMB control number.
(Also Form PTO-1050)

UNITED STATES PATENT AND TRADEMARK OFFICE
CERTIFICATE OF CORRECTION

PATENT NO.	:	7,883,067
APPLICATION NO.	:	11/981899
DATED	:	2/8/2011
INVENTOR(S)	:	James Duane Walters; Matthew William Stifal

It is certified that an error appears or errors appear in the above-identified patent and that said Letters Patent is hereby corrected as shown below:

IN THE CLAIMS

Column 9, Claim 18, Line 24, "on" should be -- once --.

MAILING ADDRESS OF SENDER (Please do not use customer number below):

321 N Clark St
Suite 2800
Chicago, Illinois 60654-5313

This collection of information is required by 37 CFR 1.322, 1.323, and 1.324. The information is required to obtain or retain a benefit by the public which is to file (and by the USPTO to process) an application. Confidentiality is governed by 35 U.S.C. 122 and 37 CFR 1.14. This collection is estimated to take 1.0 hour to complete, including gathering, preparing, and submitting the completed application form to the USPTO. Time will vary depending upon the individual case. Any comments on the amount of time you require to complete this form and/or suggestions for reducing this burden, should be sent to the Chief Information Officer,
U.S. Patent and Trademark Office, U.S. Department of Commerce, P.O. Box 1450, Alexandria, VA 22313-1450. DO NOT SEND FEES OR COMPLETED FORMS TO THIS ADDRESS. SEND TO: **Attention Certificate of Corrections Branch, Commissioner for Patents, P.O. Box 1450, Alexandria, VA 22313-1450.**

If you need assistance in completing the form, call 1-800-PTO-9199 and select option 2.

UNITED STATES PATENT AND TRADEMARK OFFICE

Commissioner for Patents
United States Patent and Trademark Office
P.O. Box 1450
Alexandria, VA 22313-1450
www.uspto.gov

AUG 19 2010

Fish & Richardson P.C.
P.O. Box 1022
Minneapolis, MN 55440-1022

In re Application of ZUPANICK, JOSEPH A.
Appl. No.:11/981,939
Filed: October 31, 2007
For: METHOD AND SYSTEM FOR ACCESSING SUBTERRANEAN DEPOSITS FROM THE SURFACE

RESPONSE TO PETITION UNDER 37 CFR 1.59

This is a decision on the petition under 37 CFR 1.59(b), filed January 18, 2008, to expunge information from the above identified application.

The petition is **GRANTED**.

Petitioner requests that the court documents from the *CNX Gas Corporation vs. CDX Gas, LLC,* Civil Action No. 05-1574, filed January 18, 2008, be expunged from the record

A petition under 37 CFR 1.59(b) must contain:

(A) a clear identification of the information to be expunged without disclosure of the details thereof;
(B) a clear statement that the information to be expunged is trade secret material, proprietary material, and/or subject to a protective order, and that the information has not been otherwise made public;
(C) a commitment on the part of the petitioner to retain such information for the period of any patent with regard to which such information is submitted;
(D) a statement that the petition to expunge is being submitted by, or on behalf of, the party in interest who originally submitted the information;
(E) the fee as set forth in 37 CFR 1.17(g) for a petition under 37 CFR 1.59(b)

The information in question has been determined by the undersigned to not be material to the examination of the instant application.

As the above conditions have been met, the requested material has been expunged. However, the material will not be returned to the applicants. The obligation to return documents was removed from 37 CFR 1.59 (June 30, 2003 Fed Register, Vol. 68, No. 125, 38613). The documents have been closed from the IFW record so as not to be viewable by non-PTO personnel. This decision only applies to this application, and any other applications containing the proprietary information will need to be separately decided.

Applicant is required to retain the expunged material(s) for the life of any patent which issues on the above-identified application.

Any questions regarding this decision should be directed to David Bagnell at (571) 272-6999.

David Talbott, Director
Patent Technology Center 3600
(571) 272-5150

DB/lm: 08/11/10
LM

UNITED STATES PATENT AND TRADEMARK OFFICE

UNITED STATES DEPARTMENT OF COMMERCE
United States Patent and Trademark Office
Address: COMMISSIONER FOR PATENTS
P.O. Box 1450
Alexandria, Virginia 22313-1450
www.uspto.gov

APPLICATION NO.	FILING DATE	FIRST NAMED INVENTOR	ATTORNEY DOCKET NO.	CONFIRMATION NO.
11/981,939	10/31/2007	Joseph A. Zupanick	17601-003013	1932

26231 7590 12/27/2011
FISH & RICHARDSON P.C. (DA)
P.O. BOX 1022
MINNEAPOLIS, MN 55440-1022

EXAMINER
KRECK, JOHN J

ART UNIT	PAPER NUMBER
3672	

NOTIFICATION DATE	DELIVERY MODE
12/27/2011	ELECTRONIC

Please find below and/or attached an Office communication concerning this application or proceeding.

The time period for reply, if any, is set in the attached communication.

Notice of the Office communication was sent electronically on above-indicated "Notification Date" to the following e-mail address(es):

PATDOCTC@fr.com

UNITED STATES PATENT AND TRADEMARK OFFICE

Commissioner for Patents
United States Patent and Trademark Office
P.O. Box 1450
Alexandria, VA 22313-1450
www.uspto.gov

Fish & Richardson P.C. (DA)
P.O. Box 1022
Minneapolis, MN 55440-1022

In re Application of	:	
ZUPANICK, Joseph A.	:	RESPONSE TO PETITION
Application No. 11/981,939	:	TO EXPUNGE FILED
Filed: October 31, 2007	:	UNDER 37 CFR § 1.59(b)
For: METHOD AND SYSTEM FOR ACCESSING	:	
SUBTERRANEAN DEPOSITS FROM THE	:	
SURFACE	:	

This is a response to the petition under 37 CFR § 1.59(b), filed July 14, 2011 to expunge information from the above identified application.

The decision on the petition will be held in abeyance until allowance of the application or mailing of an *Ex parte Quayle* action or a Notice of Abandonment, at which time the petition will be decided.

Petitioner requests that Information Disclosure Statement (IDS) filed concurrently with the petition be expunged if it is found not to be material to patentability.

A proper petition under 37 CFR 1.59(b) to expunge information submitted under MPEP § 724.02, or that should have been submitted under MPEP § 724.02 (as where proprietary information is submitted in an information disclosure statement but inadvertently not submitted in a sealed envelope as discussed in MPEP § 724.02) must contain:

(A) a clear identification of the information to be expunged without disclosure of the details thereof;
(B) a clear statement that the information to be expunged is trade secret material, proprietary material, and/or subject to a protective order, and that the information has not been otherwise made public;
(C) a commitment on the part of the petitioner to retain such information for the period of any patent with regard to which such information is submitted;
(D) a statement that the petition to expunge is being submitted by, or on behalf of, the party in interest who originally submitted the information;
(E) the fee as set forth in 37 CFR 1.17(g) for a petition under 37 CFR 1.59(b).

The decision on the petition is held in abeyance because prosecution on the merits is not closed. Accordingly, it is not appropriate to make a final determination of whether or not the material requested to be expunged is "material," with "materiality" being defined as any information which the examiner considers as being important to a determination of patentability of the claims. Thus, the decision on the petition to expunge must be held in abeyance at this time.

During prosecution on the merits, the examiner will determine whether or not the identified document is considered to be "material." If the information is not considered by the examiner to be material, the information will be removed from the official file.

Any questions regarding this communication should be directed to Teri P. Luu, Quality Assurance Specialist, at (571) 272-7045.

David Talbott, Director
Patent Technology Center 3600
(571) 272-5150

DT/tl: 12/13/11

UNITED STATES PATENT AND TRADEMARK OFFICE

UNITED STATES DEPARTMENT OF COMMERCE
United States Patent and Trademark Office
Address: COMMISSIONER FOR PATENTS
P.O. Box 1450
Alexandria, Virginia 22313-1450
www.uspto.gov

APPLICATION NO.	FILING DATE	FIRST NAMED INVENTOR	ATTORNEY DOCKET NO.	CONFIRMATION NO.
11/981,945	10/31/2007	Thomas B. Freeman	USF.102XCD1	1951

23557 7590 09/29/2011
SALIWANCHIK, LLOYD & EISENSCHENK
A PROFESSIONAL ASSOCIATION
PO Box 142950
GAINESVILLE, FL 32614

EXAMINER
GUCKER, STEPHEN

ART UNIT	PAPER NUMBER
1649	

NOTIFICATION DATE	DELIVERY MODE
09/29/2011	ELECTRONIC

Please find below and/or attached an Office communication concerning this application or proceeding.

The time period for reply, if any, is set in the attached communication.

Notice of the Office communication was sent electronically on above-indicated "Notification Date" to the following e-mail address(es):

euspto@slepatents.com

UNITED STATES PATENT AND TRADEMARK OFFICE

Commissioner for Patents
United States Patent and Trademark Office
P.O. Box 1450
Alexandria, VA 22313-1450
www.uspto.gov

September 29, 2011

SALIWANCHIK, LLOYD & EISENSCHENK
A PROFESSIONAL ASSOCIATION
PO Box 142950
GAINESVILLE FL 32614

In re Application of	:	
Thomas B. Freeman et al.	:	**DECISION ON PETITION**
Application No. 11981945	:	
Filed: 10/31/07	:	
Attorney Docket No. USF.102XCD1	:	

This is a decision on the Petition to Accept Color Drawings under 37 C.F.R 1.84(a)(2), received in the United States Patent and Trademark Office (USPTO) March 21, 2008.

The petition is **DISMISSED.**

A grantable petition under 37 C.F.R. 1.84(a)(2) must be accompanied by the following.

1. The fee set forth under 37 C.F.R. 1.17(h),
2. Three (3) sets of the color drawings in question, (One (1) set for EFS filings), and
3. The specification containing the following language as the first paragraph in that portion of the specification relating to the brief description of the drawings.

"The patent or application file contains at least one drawing executed in color. Copies of this patent or patent application publication with color drawing(s) will be provided by the Office upon request and payment of the necessary fee."

The petition did not meet the following requirement(s). 1 ☐ 2 ☑ 3 ☑

Re item 2: The petition filed 3/21/2008 states: "submitted herewith are three color copies of the formal drawings for Figures 1-33 (29 pages total)." (a) Many figures are in black and white; (b) there are 28 sheets in the file record. Figure 31 is not present in the 3/21/2008 drawings.

A renewed petition filed under 37 C.F.R. 1.84(a)(2) must be filed within TWO (2) MONTHS of this decision. If a renewed petition is not filed within the TWO (2) Months of this decision the drawings will be printed in black and white.

Telephone inquires relating to this decision may be directed to the undersigned in the Office of Data Management at 571-272-4200.

/Don Fairchild/
Office of Data Management
Publications Branch

UNITED STATES PATENT AND TRADEMARK OFFICE

Commissioner for Patents
United States Patent and Trademark Office
P.O. Box 1450
Alexandria, VA 22313-1450
www.uspto.gov

December 7, 2011

SALIWANCHIK, LLOYD & EISENSCHENK
A PROFESSIONAL ASSOCIATION
PO Box 142950
GAINESVILLE FL 32614

In re Application of	:	
Thomas B. Freeman et al.	:	**DECISION ON PETITION**
Application No. 11981945	:	
Filed: 10/31/07	:	***ACCEPTANCE OF COLOR***
Attorney Docket No. USF.102XCD1	:	***DRAWINGS***

This is a decision on the Petition to Accept Color Drawings under 37 C.F.R 1.84 (a) (2), received in the United States Patent and Trademark Office (USPTO) November 23, 2011.

The petition is **GRANTED**.

A grantable petition under 37 C.F.R. 1.84(a) (2) must be accompanied by the following.

1. The fee set forth under 37 C.F.R. 1.17(h),
2. Three (3) sets of the color drawings in question, or (1) set if filed via EFS, and
3. The specification contains appropriate language referring to the color drawings as the first paragraph in that portion of the specification relating to the brief description of the drawings.

The petition was accompanied by all of the required fees and drawings. The specification contains the appropriate language. Therefore, the petition is GRANTED.

Telephone inquires relating to this decision may be directed to the undersigned in the Office of Data Management at 571-272-4200.

/Don Fairchild/
Office of Data Management
Publications Branch

UNITED STATES PATENT AND TRADEMARK OFFICE

Commissioner for Patents
United States Patent and Trademark Office
P.O. Box 1450
Alexandria, VA 22313-1450
www.uspto.gov

TROUTMAN SANDERS LLP
THE CHRYSLER BUILDING
405 LEXINGTON AVENUE
NEW YORK NY 10174

MAILED
JUN 20 2011
OFFICE OF PETITIONS

In re Application of	:	
BARCELOU	:	
Application No. 11/981,963	:	DECISION ON PETITION
Filed: October 31, 2007	:	
Attorney Docket No. ATL1CON6	:	

This is a decision on the petition under the unintentional provisions of 37 CFR 1.137(b), filed April 27, 2011, to revive the above-identified application.

The petition is **GRANTED**.

The application became abandoned for failure to reply in a timely manner to the non-final Office action mailed, October 18, 2010, which set a shortened statutory period for reply of three (3) months. No extensions of time under the provisions of 37 CFR 1.136(a) were obtained. Accordingly, the application became abandoned on January 19, 2011.

The petition satisfies the requirements of 37 CFR 1.137(b) in that petitioner has supplied (1) the reply in the form of an amendment; (2) the petition fee of $810; and (3) a proper statement of unintentional delay.

The application file does not indicate a change of address has been filed in this case, although the address given on the petition differs from the address of record. A change of address should be filed in this case in accordance with MPEP 601.03. A courtesy copy of this decision is being mailed to the address noted on the petition. However, until otherwise instructed, all future correspondence regarding this application will be mailed solely to the address of record.

Telephone inquiries concerning this decision should be directed to the undersigned at (571) 272-6735.

This application is being referred to Technology Center AU 3667 for appropriate action by the Examiner in the normal course of business.

/Diane C. Goodwyn/
Diane C. Goodwyn
Petitions Examiner
Office of Petitions

cc: ALICIA L. W. BREWSTER
TROUTMAN SANDERS LLP,
600 PEACHTREE ST NE, SUITE 5200
ATLANTA, GA 30308

UNITED STATES PATENT AND TRADEMARK OFFICE

Commissioner for Patents
United States Patent and Trademark Office
P.O. Box 1450
Alexandria, VA 22313-1450
www.uspto.gov

Troutman Sanders LLP
The Chrysler Building
405 Lexington Avenue
New York NY 10174

MAILED
MAY 04 2011
OFFICE OF PETITIONS

In re Application of :
David M. Barcelou :
Application No. 11/981,969 : DECISION ON PETITION
Filed: October 31, 2007 :
Attorney Docket No. **ATL1CON12** :

This is a decision on the petition under the unintentional provisions of 37 CFR 1.137(b), filed March 29, 2011, to revive the above-identified application.

The petition is **GRANTED**.

This application became abandoned as a result of petitioner's failure to file an appeal brief (and fee required by 37 CFR 41.20(b)(2)) within the time period provided in 37 CFR 41.37(a)(1). As an appeal brief (and appeal brief fee) was not filed within two (2) months of the Notice of Appeal filed August 3, 2010, and no extensions of time under the provisions of 37 CFR 1.136(a) were obtained, the appeal was dismissed and the proceedings as to the rejected claims were terminated. See 37 CFR 1.197(b). As no claim was allowed, the application became abandoned on October 4, 2010. *See* MPEP 1215.04.

The petition satisfies the requirements of 37 CFR 1.137(b) in that petitioner has supplied (1) the reply in the form of a Request for Continued Examination (RCE) and fee of $405, and the submission required by 37 CFR 1.114; (2) the petition fee of $810; and (3) a proper statement of unintentional delay.

Telephone inquiries concerning this decision should be directed to the undersigned at (571) 272-4584.

This application is being referred to Technology Center AU 3694 for processing of the RCE and for appropriate action by the Examiner in the normal course of business on the amendment submitted in accordance with 37 CFR 1.114.

JoAnne Burke
Petitions Examiner
Office of Petitions

UNITED STATES PATENT AND TRADEMARK OFFICE

Commissioner for Patents
United States Patent and Trademark Office
P.O. Box 1450
Alexandria, VA 22313-1450
www.uspto.gov

JUL 1 8 2011

FISH & RICHARDSON P.C. (DA)
P.O. BOX 1022
MINNEAPOLIS MN 55440-1022

In re Application of	:	
Joseph A. Zupanick	:	DECISION ON PETITION
Application No. 11/981,971	:	TO EXPUNGE FILED
Filed: October 31, 2007	:	UNDER 37 CFR 1.59(b)
For: METHODS AND SYSTEMS FOR ACCESSING	:	
SUBTERRANEAN DEPOSITS FROM THE	:	
SURFACE AND TOOLS THEREFOR	:	

This is a decision on the petition under 37 CFR 1.59(b), filed August 17, 2009, to expunge information from the above identified application.

The decision on the petition will be held in abeyance until allowance of the application or mailing of an Ex parte Quayle action or a Notice of Abandonment, at which time the petition will be decided.

Petitioner requests that the propriety information disclosed in the Information Disclosure Statement (IDS) filed on August 17, 2009 concurrently with the petition be expunged from the record. Petitioner states either: (A) that the information contains trade secret material, proprietary material and/or material that is subject to a protective order which has not been made public; or (B) that the information submitted was unintentionally submitted and the failure to obtain its return would cause irreparable harm to the party who submitted the information or to the party in interest on whose behalf the information was submitted, and the information has not otherwise been made public. The petition fee set forth in 37 CFR 1.17(g) has been paid.

The decision on the petition is held in abeyance because prosecution on the merits is not closed. Accordingly, it is not appropriate to make a final determination of whether or not the material requested to be expunged is "material," with "materiality" being defined as any information which the examiner considers as being important to a determination of patentability of the claims. Thus, the decision on the petition to expunge must be held in abeyance at this time.

During prosecution on the merits, the examiner will determine whether or not the identified document is considered to be "material." If the information is not considered by the examiner to be material, the information will be removed from the official file.

David L. Talbott, Director
Patent Technology Center 3600
(571) 272-5150

lm: 7/11/11

LM

UNITED STATES PATENT AND TRADEMARK OFFICE

Commissioner for Patents
United States Patent and Trademark Office
P.O. Box 1450
Alexandria, VA 22313-1450
www.uspto.gov

APR - 2 2012

Fish & Richardson P.C.
P.O. Box 1022
Minneapolis, MN 55440-1022

In re Application of ZUPANICK, JOSEPH A.	:	
Appl. No.:11/981,971	:	**RESPONSE TO PETITION**
Filed: October 31, 2007	:	**UNDER 37 CFR 1.59**
For: METHOD AND SYSTEM FOR ACCESSING	:	
SUBTERRANEAN DEPOSITS FROM THE SURFACE	:	
AND TOOLS THEREFOR	:	

This is a decision on the petition under 37 CFR 1.59(b), filed January 18, 2008, to expunge information from the above identified application.

The petition is **GRANTED**.

Petitioner requests that the court documents from the Information Disclosure Statement, filed January 18, 2008, be expunged from the record

A petition under 37 CFR 1.59(b) must contain:

(A) a clear identification of the information to be expunged without disclosure of the details thereof;
(B) a clear statement that the information to be expunged is trade secret material, proprietary material, and/or subject to a protective order, and that the information has not been otherwise made public;
(C) a commitment on the part of the petitioner to retain such information for the period of any patent with regard to which such information is submitted;
(D) a statement that the petition to expunge is being submitted by, or on behalf of, the party in interest who originally submitted the information;
(E) the fee as set forth in 37 CFR 1.17(g) for a petition under 37 CFR 1.59(b)

The information in question has been determined by the undersigned to not be material to the examination of the instant application.

As the above conditions have been met, the requested material has been expunged. However, the material will not be returned to the applicants. The obligation to return documents was removed from 37 CFR 1.59 (June 30, 2003 Fed Register, Vol. 68, No. 125, 38613). The documents have been closed from the IFW record so as not to be viewable by non-PTO personnel. This decision only applies to this application, and any other applications containing the proprietary information will need to be separately decided.

Applicant is required to retain the expunged material(s) for the life of any patent which issues on the above-identified application.

Any questions regarding this decision should be directed to David Bagnell at (571) 272-6999.

David Talbott, Director
Patent Technology Center 3600
(571) 272-5150

DT/DB: 3/27/12

LM

UNITED STATES PATENT AND TRADEMARK OFFICE

UNITED STATES DEPARTMENT OF COMMERCE
United States Patent and Trademark Office
Address: COMMISSIONER FOR PATENTS
P.O. Box 1450
Alexandria, Virginia 22313-1450
www.uspto.gov

APPLICATION NO.	FILING DATE	FIRST NAMED INVENTOR	ATTORNEY DOCKET NO.	CONFIRMATION NO.
11/981,976	10/31/2007	Aladar A. Szalay	33346.04803.US24/4803E	1485

13565 7590 10/28/2011
McKenna Long & Aldridge LLP
4435 Eastgate Mall
Suite 400
San Diego, CA 92121

EXAMINER
CHEN, SHIN LIN

ART UNIT	PAPER NUMBER
1632	

MAIL DATE	DELIVERY MODE
10/28/2011	PAPER

Please find below and/or attached an Office communication concerning this application or proceeding.

The time period for reply, if any, is set in the attached communication.

UNITED STATES PATENT AND
TRADEMARK OFFICE

OCT 2 8 2011

Commissioner for Patents
United States Patent and Trademark Office
P.O. Box 1450
Alexandria, VA 22313-1450
www.uspto.gov

McKenna Long & Aldridge LLP
4435 Eastgate Mall
Suite 400
San Diego CA 92121

In re Application of:
Szalay et al.
Serial No.: 11/981,976
Filed: October 31, 2007
Attorney Docket No:
33346.04803.US24/4803E

: PETITION DECISION

This is in response to the petition filed on July 5, 2011 under 3 7 CFR 1.181 to correct the misclassification of submitted Information Disclosure Statements. Specifically, applicants request correction of the classification in PAIR of the Information Disclosure Statements submitted on March 13, 2008; February 23, 2009; October 15, 2009; November 12, 2009; and November 15, 2010 in connection with the above-referenced application and consideration by the Examiner of the documents and information contained therein.

Applicants argue the "Information Disclosure Statements were submitted in connection with the above-captioned application on March 13, 2008; February 23, 2009; October 15, 2009; November 12, 2009; and November 15, 2010. Each Information Disclosure Statement was prepared in accordance with 37 C.F.R 1.97 and 1.98. As required under 37 C.F.R 1.98, each Information Disclosure Statement contained 1) a list of all patents, publications, applications, or other information submitted for consideration by the Office, including a column that provides a space next to each document to be considered, for the examiner's initials and a heading that clearly indicates that the list is an Information Disclosure Statement; and 2) legible copies of all items listed. The items either were in English or a translation was provided. A copy of the misclassified Information Disclosure Statements filed on June March 13, 2008; February 23, 2009; October 15, 2009; November 12, 2009; and November 15, 2010 is attached.

The submitted Information Disclosure Statement included a tabular Form PTO-1449, which was classified as an "IDS," and a written disclosure of information. In each instance, the written disclosure of information was misclassified in PAIR as a "Transmittal Letter" (March 13, 2008, "Transmittal Letter" of 7 pages; February 23, 2009, "Transmittal Letter" of 15 pages; October 15, 2009, "Transmittal Letter" of 6 pages; November 12, 2009, "Transmittal Letter" of 5 pages; and November 15, 2010, "Transmittal Letter" of 4 pages). Consequently the information contained therein may not be considered or reviewed by the Examiner."

Applicants' argument has been accorded careful consideration and is persuasive. PAIR will be corrected to reflect the misclassification of the submitted Information Disclosure Statements of March 13, 2008; February 23, 2009; October 15, 2009; November 12, 2009; and November 15, 2010.

DECISION

The petition is **GRANTED.**

Should there be any questions about this decision please contact Marianne C. Seidel, by letter addressed to Director, TC 1600, at the address listed above, or by telephone at 571-272-0584 or by facsimile sent to the general Office facsimile number, 571-273-8300.

/MC Seidel/
Marianne C. Seidel, Quality Assurance Specialist
Technology Center 1600

UNITED STATES PATENT AND TRADEMARK OFFICE

Commissioner for Patents
United States Patent and Trademark Office
P.O. Box 1450
Alexandria, VA 22313-1450
www.uspto.gov

MAILED

SEP 14 2010

OFFICE OF PETITIONS

Troutman Sanders LLP
The Chrysler Building
405 Lexington Avenue
New York NY 10174

In re Application of	:	
David M. Barcelou	:	
Application No. 11/981,991	:	ON PETITION
Filed: October 31, 2007	:	
Attorney Docket No. ATL1CON14	:	

This is a decision on the petition under the unintentional provisions of 37 CFR 1.137(b), filed August 11, 2010, to revive the above-identified application.

The petition is **GRANTED**.

The application became abandoned for failure to reply in a timely manner to the final Office action mailed, February 5, 2010, which set a shortened statutory period for reply of three (3) months. No extensions of time under the provisions of 37 CFR 1.136(a) were obtained. Accordingly, the application became abandoned on May 6, 2010.

The petition satisfies the requirements of 37 CFR 1.137(b) in that petitioner has supplied (1) the reply in the form of a Notice of Appeal, with the required fee of $270, (2) the petition fee of $810, and (3) a proper statement of unintentional delay. Accordingly, the Notice of Appeal is accepted as being unintentionally delayed.

The two-month period for filing an appeal brief under 37 CFR 41.37 (accompanied by the fee required by 37 CFR 41.20(b)(2)), runs from the date of this decision.

The application file does not indicate a change of address has been filed in this case, although the address given on the petition differs from the address of record. A change of address should be filed in this case in accordance with MPEP 601.03. A courtesy copy of this decision is being mailed to the address noted on the petition. However, until otherwise instructed, all future correspondence regarding this application will be mailed solely to the address of record.

An extension of time under 37 CFR 1.136 must be filed prior to the expiration of the maximum extendable period for reply. *See* In re Application of S., 8 USPQ2d 1630, 1631 (Comm'r Pats. 1988). Since the $555 extension of time fee submitted with the petition on August 11, 2010 was subsequent to the maximum extendable period for reply, this fee is unnecessary and will be credited to petitioner's deposit account.

Telephone inquiries concerning this decision should be directed to Kimberly Inabinet at (571) 272-4618.

This application is being referred to Technology Center AU 3694 for processing of the response and any action that is required by the Examiner in the normal course of business.

/Kimberly Inabinet/

Kimberly Inabinet
Petitions Examiner
Office of Petitions

cc: Alicia L. W. Brewster
Troutman Sanders, LLP
600 Peachtree Street, NE
Suite 5200
Atlanta, GA 30308

UNITED STATES PATENT AND TRADEMARK OFFICE

Commissioner for Patents
United States Patent and Trademark Office
P.O. Box 1450
Alexandria, VA 22313-1450
www.uspto.gov

Troutman Sanders, LLP
The Chrysler Building
405 Lexington Avenue
New York, NY 10174

MAILED
MAY 06 2011
OFFICE OF PETITIONS

In re Application of :
David M. Barcelou :
Application No. 11/981,991 : ON PETITION
Filed: October 31, 2007 :
Attorney Docket No. ATL1CON14 :

This is a decision on the petition under 37 CFR 1.137(b), filed March 31, 2011, to revive the above-identified application.

The application became abandoned for failure to file an appeal brief and fee within two months from the mail date of the decision mailed September 13, 2010.

The petition satisfies the requirements of 37 CFR 1.137(b) in that petitioner has supplied (1) the reply in the form of a Request for Continued Examination (RCE) along with the $405 fee and the submission under 37 CFR 1.114; (2) the petition fee of $810; and (3) a proper statement of unintentional delay. Therefore, the petition is **GRANTED**.

This application file is being referred to Technology Center Art Unit 3667 for processing of the RCE and for appropriate action by the Examiner in the normal course of business on the amendment submitted in accordance with 37 CFR 1.114.

Telephone inquiries concerning this decision should be directed to the undersigned at (571) 272-3226.

Andrea Smith
Petitions Examiner
Office of Petitions

UNITED STATES PATENT AND TRADEMARK OFFICE

Commissioner for Patents
United States Patent and Trademark Office
P.O. Box 1450
Alexandria, VA 22313-1450
www.uspto.gov

TROUTMAN SANDERS LLP
THE CHRYSLER BUILDING
405 LEXINGTON AVENUE
NEW YORK NY 10174

MAILED

MAR 16 2011

OFFICE OF PETITIONS

In re Application of :
David M. Barcelou :
Application No. 11/981,992 : ON PETITION
Filed: October 31, 2007 :
Attorney Docket No. ATL1 CON 15 :

This is a decision on the petition under 37 CFR 1.137(b)[1], filed February 7, 2011 to revive the above-identified application.

The petition is **GRANTED**.

This application became abandoned for failure to timely file an Appeal Brief within two months of the Notice of Appeal filed June 28, 2010 with a three month extension of time, in response to the Final Office Action mailed December 28, 2009. The instant petition and this decision precede the mailing of the Notice of Abandonment.

Petitioner has submitted a Request for Continued Examination (RCE) and an amendment as the submission required under 37 CFR 1.114.

This matter is being referred to Technology Center 3694 for processing of the RCE. Telephone inquiries related to this decision should be directed to the undersigned Petitions Attorney at (571) 272-3212.

Patricia Faison-Ball
Senior Petitions Attorney
Office of Petitions

---

[1]Effective December 1, 1997, the provisions of 37 CFR 1.137(b) now provide that where the delay in reply was unintentional, a petition may be filed to revive an abandoned application or a lapsed patent pursuant to 37 CFR 1.137(b). A grantable petition filed under the provisions of 37 CFR 1.137(b) must be accompanied by:

(1) the required reply, unless previously filed. In a nonprovisional application abandoned for failure to prosecute, the required reply may be met by the filing of a continuing application. In an application or patent, abandoned or lapsed for failure to pay the issue fee or any portion thereof, the required reply must be the payment of the issue fee or any outstanding balance thereof.

(2) the petition fee as set forth in 37 CFR 1.17(m);

(3) a statement that the entire delay in filing the required reply from the due date for the reply until the filing of a grantable petition pursuant to 37 CFR 1.137(b) was unintentional. The Commissioner may required additional information where there is a question whether the delay was unintentional; and

(4) any terminal disclaimer (and fee as set forth in 37 CFR 1.20(d)) required pursuant to 37 CFR 1.137(c)).

UNITED STATES PATENT AND TRADEMARK OFFICE

Commissioner for Patents
United States Patent and Trademark Office
P.O. Box 1450
Alexandria, VA 22313-1450
www.uspto.gov

TROUTMAN SANDERS LLP
THE CHRYSLER BUILDING
405 LEXINGTON AVENUE
NEW YORK NY 10174

MAILED
JAN 04 2012
OFFICE OF PETITIONS

In re Application of
David M. Barcelou
Application No. 11/981,992
Filed: October 31, 2007
Attorney Docket No: **ATL1 CON 15**

ON PETITION

This is a decision on the petition filed December 22, 2011 under 37 CFR 1.137(b),[1] to revive the above-identified application.

The petition is **GRANTED**.

This application became abandoned September 19, 2011 for failure to timely reply to the non-Final Office Action mailed June 16, 2011 within the shortened statutory period of three months set for reply. Accordingly, a Notice of Abandonment was mailed December 22, 2011.

This matter is being referred to Technology Center 3694 for appropriate action on the amendment filed December 22, 2011.

Telephone inquiries concerning this matter should be directed to the undersigned Petitions Attorney at (571) 272-3212.

Patricia Faison-Ball
Senior Petitions Attorney
Office of Petitions

---

[1]Effective December 1, 1997, the provisions of 37 CFR 1.137(b) now provide that where the delay in reply was unintentional, a petition may be filed to revive an abandoned application or a lapsed patent pursuant to 37 CFR 1.137(b). A grantable petition filed under the provisions of 37 CFR 1.137(b) must be accompanied by:

(1) the required reply, unless previously filed. In a nonprovisional application abandoned for failure to prosecute, the required reply may be met by the filing of a continuing application. In a nonprovisional application filed on or after June 8, 1995, and abandoned for failure to prosecute, the required reply may also be met by the filing of a request for continued examination in compliance with § 1.114. In an application or patent, abandoned or lapsed for failure to pay the issue fee or any portion thereof, the required reply must be the payment of the issue fee or any outstanding balance thereof. In an application abandoned for failure to pay the publication fee, the required reply must include payment of the publication fee.

(2) the petition fee as set forth in 37 CFR 1.17(m);

(3) a statement that the entire delay in filing the required reply from the due date for the reply until the filing of a grantable petition pursuant to 37 CFR 1.137(b) was unintentional. The Director may require additional information where there is a question whether the delay was unintentional; and

(4) any terminal disclaimer (and fee as set forth in 37 CFR 1.20(d)) required pursuant to 37 CFR 1.137(c)).

UNITED STATES PATENT AND TRADEMARK OFFICE

Commissioner for Patents
United States Patent and Trademark Office
P.O. Box 1450
Alexandria, VA 22313-1450
www.uspto.gov

Troutman Sanders, LLP
The Chrysler Building
405 Lexington Avenue
New York, NY 10174

MAILED
MAY 06 2011
OFFICE OF PETITIONS

In re Application of
David M. Barcelou
Application No. 11/981,994
Filed: October 31, 2007
Attorney Docket No. ATL1CON17

ON PETITION

This is a decision on the petition under 37 CFR 1.137(b), filed March 31, 2011, to revive the above-identified application.

The application became abandoned for failure to file an appeal brief and fee within two months from the filing of the Notice of Appeal on August 23, 2010.

The petition satisfies the requirements of 37 CFR 1.137(b) in that petitioner has supplied (1) the reply in the form of a Request for Continued Examination (RCE) along with the $405 fee and the submission under 37 CFR 1.114; (2) the petition fee of $810; and (3) a proper statement of unintentional delay. Therefore, the petition is **GRANTED**.

Since the address given in the present petition differs from the correspondence address of record, a courtesy copy of this decision is being mailed to the address given in the petition. Thereafter, all future communications from the Office will be mailed to the address of record until otherwise instructed.

This application file is being referred to Technology Center Art Unit 3694 for processing of the RCE and for appropriate action by the Examiner in the normal course of business on the amendment submitted in accordance with 37 CFR 1.114.

Telephone inquiries concerning this decision should be directed to the undersigned at (571) 272-3226.

Andrea Smith
Petitions Examiner
Office of Petitions

cc: Alicia L. W. Brewster
Troutman Sanders, LLP
600 Peachtree Street, NE - Suite 5200
Atlanta, GA 30308

UNITED STATES PATENT AND TRADEMARK OFFICE

Commissioner for Patents
United States Patent and Trademark Office
P.O. Box 1450
Alexandria, VA 22313-1450
www.uspto.gov

MAR - 7 2011

Fish & Richardson P.C.
P.O. Box 1022
Minneapolis, MN 55440-1022

In re Application of ZUPANICK, JOSEPH A.	:	
Appl.No.: 11/982015	:	**DECISION ON PETITION**
Filed: October 31, 2007	:	**UNDER 37 CFR 1.59**
For: METHOD AND SYSTEM FOR ACCESSING	:	
SUBTERRANEAN DEPOSITS FROM THE	:	
SURFACE AND TOOLS THEREFOR	:	
	:	
	:	

This is a decision on the petitions under 37 CFR 1.59(b), filed January 18, 2008 and September 14, 2009, to expunge information from the above identified application.

The petition is GRANTED.

Petitioner requests that the court documents from the *CNX Gas Corporation vs. CDX Gas, LLC,* Civil Action No. 05-1574, filed January 18, 2008, be expunged from the record. Petitioner also requests that the materials provided by Cliffs Natural Resources, filed September 14, 2009, be expunged from the record.

A petition under 37 CFR 1.59(b) must contain:

(A) a clear identification of the information to be expunged without disclosure of the details thereof;
(B) a clear statement that the information to be expunged is trade secret material, proprietary material, and/or subject to a protective order, and that the information has not been otherwise made public;
(C) a commitment on the part of the petitioner to retain such information for the period of any patent with regard to which such information is submitted;
(D) a statement that the petition to expunge is being submitted by, or on behalf of, the party in interest who originally submitted the information;
(E) the fee as set forth in 37 CFR 1.17(g) for a petition under 37 CFR 1.59(b)

The information in question has been determined by the undersigned to not be material to the examination of the instant application.

As the above conditions have been met, the requested material has been expunged. However, the material will not be returned to the applicants. The obligation to return documents was removed from 37 CFR 1.59 (June 30, 2003 Fed Register, Vol. 68, No. 125, 38613). The documents have been closed from the IFW record so as not to be viewable by non-PTO personnel. This decision only applies to this application, and any other applications containing the proprietary information will need to be separately decided.

Applicant is required to retain the expunged material(s) for the life of any patent which issues on the above-identified application.

Any questions regarding this decision should be directed to David Bagnell at (571) 272-6999.

David Talbott, Director
Patent Technology Center 3600
(571) 272-5150

DT/db 02/11/11

UNITED STATES PATENT AND TRADEMARK OFFICE

UNITED STATES DEPARTMENT OF COMMERCE
United States Patent and Trademark Office
Address: COMMISSIONER FOR PATENTS
P.O. Box 1450
Alexandria, Virginia 22313-1450
www.uspto.gov

APPLICATION NO.	FILING DATE	FIRST NAMED INVENTOR	ATTORNEY DOCKET NO.	CONFIRMATION NO.
11/982,025	10/31/2007	Kyu Hui Han	5004-1-067	2918

33942 7590 12/14/2010
Cha & Reiter, LLC
17 Arcadian Avenue
Suite 208
Paramus, NJ 07652

EXAMINER
MANDEL, MONICA A

ART UNIT	PAPER NUMBER
3621	

MAIL DATE	DELIVERY MODE
12/14/2010	PAPER

Please find below and/or attached an Office communication concerning this application or proceeding.

The time period for reply, if any, is set in the attached communication.

UNITED STATES PATENT AND TRADEMARK OFFICE

Commissioner for Patents
United States Patent and Trademark Office
P.O. Box 1450
Alexandria, VA 22313-1450
www.uspto.gov

DEC 14 2010

Cha & Reiter, LLC
210 Route 4 East STE 103
Paramus, NJ 07625

In re Application of: Kyu Han et. al. :
Appl. No. 11/982,025 :
Filed: October 31, 2007 :
For: METHOD AND ENHANCING DRM :
AUTHORITY CONTENT, AND :
PORTABLE TERMINAL :
USING SAME :

DECISION ON PETITION
UNDER 37 C.F.R. § 1.181

This is in response to applicant's petition under 37 CFR 1.181 filed on October 19, 2009 requesting withdrawal of the Office action mailed September 2, 2009, and to expunge the dictionary definitions and conclusory statements made in the September 2, 2009 Office action.

The petition is **DISMISSED**.

Applicants allege that the examiner has improperly denied applicants' right to be their own lexicographer when applicant chose not to include express definitions of claim terms in the specification. Applicants further allege that instead of relying on the specification for the meaning of the term, the examiner improperly introduced dictionary definition of claim terms. This renders the Office action improper. Therefore, the September 02, 2009 Office action should be withdrawn and the dictionary definitions be expunged from the record.

A review of the file history indicates that a non-final office action was mailed on September 02, 2009. Applicants filed a response on December 02, 2009.

Applicants' petition sets forth two sections: "Facts" (beginning on page 1) and "Relief Requested" (beginning on page 9). In the Facts section, applicants appear to argue on page 2 that applicants are their own lexicographer. However because applicants do not point to a term or terms in which they desire to be their own lexicographer, it is impossible at this time determine the merits of applicant's request.

Applicants next argue that the claims of record should be interpreted in accordance with 35 U.S.C. § 112 6th paragraph. However claim interpretation is a question of law and is appealable to the USPTO Board of Appeals and Interferences. Claim interpretation is not procedural in nature. Since invocation of 35 U.S.C. § 112 6th paragraph is a claim interpretation issue,

determining whether or not a claim invokes 35 U.S.C. § 112 6th paragraph is therefore an appealable issue.

Moreover MPEP §2181 I. describes the "3-prong analysis" for the invocation of 35 U.S.C. § 112 6th paragraph. This section of the MPEP goes on to state that "[w]ith respect to the first prong of this analysis, a claim element that does not include the phrase 'means for' or 'step for' will not be considered to invoke 35 U.S.C. 112, sixth paragraph." While applicants may try to overcome this presumption with persuasive arguments, the Examiner must next be given an opportunity to respond to applicants' arguments.

Applicants also argue that it is improper to introduce dictionary definitions of claim terms. Dictionary definitions are factual sources. The Examiner's definitions are not unreasonable when the Examiner can point to other sources that support her interpretation of the claims.

Additionally, a review of the file history indicates that the arguments made in the instant petition have not yet been presented to the Examiner. Applicant is reminded that petitionable matters should be first presented to the examiner in order for the examiner to reconsider applicant's arguments.

The response filed December 2, 2009 attempts to incorporate by reference the arguments contained in the instant petition. That incorporation by reference is improper. Applicant is advised that arguments filed in the instant petition should be raised separately via a response to the petition decision.

The application is being forwarded to the examiner of record for proper consideration of the amendment filed in response to the non-final Office action on 02 December 2009.

Any questions regarding this decision should be directed to Supervisory Patent Examiner Andrew Fischer at (571) 272-6779.

Wynn Coggins, Director
Patent Technology Center 3600
(571) 272-5350

ajf: 8/2/2010

LM

UNITED STATES PATENT AND TRADEMARK OFFICE

UNITED STATES DEPARTMENT OF COMMERCE
United States Patent and Trademark Office
Address: COMMISSIONER FOR PATENTS
P.O. Box 1450
Alexandria, Virginia 22313-1450
www.uspto.gov

APPLICATION NO.	FILING DATE	FIRST NAMED INVENTOR	ATTORNEY DOCKET NO.	CONFIRMATION NO.
11/982,086	10/31/2007	Joseph A. Zupanick	17601-043003	3114

26231 7590 08/11/2010
FISH & RICHARDSON P.C.
P.O. BOX 1022
MINNEAPOLIS, MN 55440-1022

EXAMINER
KRECK, JOHN J

ART UNIT	PAPER NUMBER
3672	

NOTIFICATION DATE	DELIVERY MODE
08/11/2010	ELECTRONIC

Please find below and/or attached an Office communication concerning this application or proceeding.

The time period for reply, if any, is set in the attached communication.

Notice of the Office communication was sent electronically on above-indicated "Notification Date" to the following e-mail address(es):

PATDOCTC@fr.com

UNITED STATES PATENT AND TRADEMARK OFFICE

Commissioner for Patents
United States Patent and Trademark Office
P.O. Box 1450
Alexandria, VA 22313-1450
www.uspto.gov

AUG 10 2010

Fish & Richardson P.C.
P.O. Box 1022
Minneapolis, MN 55440-1022

In re Application of Joseph A. Zupanick Application No. 11/982,086 Filed: October 31, 2007 For: METHOD AND SYSTEM FOR ACCESSING SUBTERRANEAN DEPOSITS FROM THE SURFACE AND TOOLS THEREFOR	RESPONSE TO PETITION TO EXPUNGE FILED UNDER 37 CFR 1.59(b)

This is a response to the petition under 37 CFR 1.59(b), filed on September 14, 2009, to expunge information from the above identified application.

The decision on the petition will be held in abeyance until allowance of the application or mailing of an *Ex parte Quayle* action or a Notice of Abandonment, at which time the petition will be decided.

Petitioner requests that documents filed with an Information Disclosure Statement filed September 14, 2009, are considered to be trade secret material, proprietary information, and/or subject to a protective order, have not been otherwise made public, and that they be expunged from the record if not found to be material to the patentability of the application. The proprietary document was filed in accordance to MPEP § 724. The petition fee set forth in 37 CFR 1.17(h) has been paid.

The decision on the petition is held in abeyance because prosecution on the merits is not closed. Accordingly, it is not appropriate to make a final determination of whether or not the material requested to be expunged is "material," with "materiality" being defined as any information which the examiner considers as being important to a determination of patentability of the claims. Thus, the decision on the petition to expunge must be held in abeyance at this time.

In the meantime, the document will be closed whereby any non-Patent and Trademark Office personnel will be precluded from viewing or having access to the document, such as via public PAIR.

During prosecution on the merits, the examiner will determine whether or not the identified document is considered to be "material." If the information is not considered by the examiner to be material, the information will be removed from the official file.

Dave Talbott, Director
Patent Technology Center 3600
(571) 272-5150

SM/sm: 7/27/10

SM

UNITED STATES PATENT AND TRADEMARK OFFICE

Commissioner for Patents
United States Patent and Trademark Office
P.O. Box 1450
Alexandria, VA 22313-1450
www.uspto.gov

AUG 19 2010

Fish & Richardson P.C.
P.O. Box 1022
Minneapolis, MN 55440-1022

In re Application of ZUPANICK, JOSEPH A. Appl. No.: 11/982,086 Filed: October 31, 2007 For: METHOD AND SYSTEM FOR ACCESSING SUBTERRANEAN DEPOSITS FROM THE SURFACE AND TOOLS THEREFOR	:	**DECISION ON PETITION UNDER 37 CFR 1.59**

This is a decision on the petitions under 37 CFR 1.59(b), filed January 18, 2008 and September 14, 2009, to expunge information from the above identified application.

The petition is GRANTED.

Petitioner requests that the court documents from the *CNX Gas Corporation vs. CDX Gas, LLC,* Civil Action No. 05-1574, filed January 18, 2008, be expunged from the record. Petitioner also requests that documents filed with the Information Disclosure Statement filed September 14, 2009, be expunged from the record.

A petition under 37 CFR 1.59(b) must contain:

(A) a clear identification of the information to be expunged without disclosure of the details thereof;
(B) a clear statement that the information to be expunged is trade secret material, proprietary material, and/or subject to a protective order, and that the information has not been otherwise made public;
(C) a commitment on the part of the petitioner to retain such information for the period of any patent with regard to which such information is submitted;
(D) a statement that the petition to expunge is being submitted by, or on behalf of, the party in interest who originally submitted the information;
(E) the fee as set forth in 37 CFR 1.17(g) for a petition under 37 CFR 1.59(b)

The information in question has been determined by the undersigned to not be material to the examination of the instant application.

Application No. 11/982,086

As the above conditions have been met, the requested material has been expunged. However, the material will not be returned to the applicants. The obligation to return documents was removed from 37 CFR 1.59 (June 30, 2003 Fed Register, Vol. 68, No. 125, 38613). The documents have been closed from the IFW record so as not to be viewable by non-PTO personnel. This decision only applies to this application, and any other applications containing the proprietary information will need to be separately decided.

Applicant is required to retain the expunged material(s) for the life of any patent which issues on the above-identified application.

Any questions regarding this decision should be directed to David Bagnell at (571) 272-6999.

David Talbott, Director
Patent Technology Center 3600
(571) 272-5150

DB/ 08/16/10
/TL/

UNITED STATES PATENT AND TRADEMARK OFFICE

Commissioner for Patents
United States Patent and Trademark Office
P.O. Box 1450
Alexandria, VA 22313-1450
www.uspto.gov

MINTZ LEVIN COHN FERRIS GLOVSKY & POPEO
ONE FINANCIAL CENTER
BOSTON, MA 02111

MAILED
MAY 27 2011
OFFICE OF PETITIONS

In re Application of	:	
Jan Berka, et al.	:	
Application No.: 11/982,095	:	ON PETITION
Filed: October 31, 2007	:	
Attorney Docket No.: 21465-508C01US	:	

This is a decision on the petition, filed May 26, 2011, under 37 CFR 1.313(c)(2) to withdraw the above-identified application from issue after payment of the issue fee.

The petition is **GRANTED**.

The above-identified application is withdrawn from issue for consideration of a submission under 37 CFR 1.114 (request for continued examination). See 37 CFR 1.313(c)(2).

Petitioner is advised that the issue fee paid on May 5, 2011, cannot be refunded. If, however, this application is again allowed, petitioner may request that it be applied towards the issue fee required by the new Notice of Allowance.[1]

Telephone inquiries relating to this decision should be directed to the undersigned at (571) 272-3204.

The application is being referred to Technology Center AU 1637 for further processing of the request for continued examination under 37 CFR 1.114 and for consideration of the concurrently filed Information Disclosure Statement (IDS).

/SDB/

Sherry D. Brinkley
Petitions Examiner
Office of Petitions

[1] *The request to apply the issue fee to the new Notice may be satisfied by completing and returning the new Part B – Fee(s) Transmittal Form (along with any balance due at the time of submission). Petitioner is advised that the Issue Fee Transmittal Form* ***must*** *be completed and timely submitted to avoid abandonment of the application.*

UNITED STATES PATENT AND TRADEMARK OFFICE

Commissioner for Patents
United States Patent and Trademark Office
P.O. Box 1450
Alexandria, VA 22313-1450
www.uspto.gov

In re Application of
John C. Meade

Application No. 11982174

Filed: November 1,2007

Attorney Docket No. 86848CIP (306932)

:DECISION ON PETITION TO MAKE SPECIAL
:UNDER 37 CFR 1.102(c)(1)

This is a decision on the electronic petition under 37 CFR 1.102 (c)(1), filed 05-NOV-2010 to make the above-identified application special based on applicant's age as set forth in MPEP § 708.02, Section IV.

The petition is **GRANTED**.

A grantable petition to make an application special under 37 CFR 1.102(c)(1), MPEP § 708.02, Section IV: Applicant's Age must include a statement by applicant or a registered practitioner having evidence that applicant is at least 65 years of age. No fee is required.

Accordingly, the above-identified application has been accorded "special" status and will be taken up for action by the examiner upon the completion of all pre-examination processing.

Telephone inquiries concerning this electronic decision should be directed to the Electronic Business Center at 866-217-9197.

All other inquiries concerning either the examination or status of the application should be directed to the Technology Center.

UNITED STATES PATENT AND TRADEMARK OFFICE

UNITED STATES DEPARTMENT OF COMMERCE
United States Patent and Trademark Office
Address: COMMISSIONER FOR PATENTS
P.O. Box 1450
Alexandria, Virginia 22313-1450
www.uspto.gov

APPLICATION NO.	FILING DATE	FIRST NAMED INVENTOR	ATTORNEY DOCKET NO.	CONFIRMATION NO.
11/982,181	10/31/2007	Joseph A. Zupanick	17601-043005	3275

26231 7590 08/11/2010
FISH & RICHARDSON P.C.
P.O. BOX 1022
MINNEAPOLIS, MN 55440-1022

EXAMINER
KRECK, JOHN J

ART UNIT	PAPER NUMBER
3672	

NOTIFICATION DATE	DELIVERY MODE
08/11/2010	ELECTRONIC

Please find below and/or attached an Office communication concerning this application or proceeding.

The time period for reply, if any, is set in the attached communication.

Notice of the Office communication was sent electronically on above-indicated "Notification Date" to the following e-mail address(es):

PATDOCTC@fr.com

UNITED STATES PATENT AND TRADEMARK OFFICE

Commissioner for Patents
United States Patent and Trademark Office
P.O. Box 1450
Alexandria, VA 22313-1450
www.uspto.gov

AUG 10 2010

Fish & Richardson P.C.
P.O. Box 1022
Minneapolis, MN 55440-1022

In re Application of Joseph A. Zupanick Application No. 11/982,181 Filed: October 31, 2007 For: METHOD AND SYSTEM FOR ACCESSING SUBTERRANEAN DEPOSITS FROM THE SURFACE AND TOOLS THEREFOR	: : : : : : :	RESPONSE TO PETITION TO EXPUNGE FILED UNDER 37 CFR 1.59(b)

This is a response to the petition under 37 CFR 1.59(b), filed on September 14, 2009, to expunge information from the above identified application.

The decision on the petition will be held in abeyance until allowance of the application or mailing of an *Ex parte Quayle* action or a Notice of Abandonment, at which time the petition will be decided.

Petitioner requests that documents filed with an Information Disclosure Statement filed September 14, 2009, are considered to be trade secret material, proprietary information, and/or subject to a protective order, have not been otherwise made public, and that they be expunged from the record if not found to be material to the patentability of the application. The proprietary document was filed in accordance to MPEP § 724. The petition fee set forth in 37 CFR 1.17(h) has been paid.

The decision on the petition is held in abeyance because prosecution on the merits is not closed. Accordingly, it is not appropriate to make a final determination of whether or not the material requested to be expunged is "material," with "materiality" being defined as any information which the examiner considers as being important to a determination of patentability of the claims. Thus, the decision on the petition to expunge must be held in abeyance at this time.

In the meantime, the document will be closed whereby any non-Patent and Trademark Office personnel will be precluded from viewing or having access to the document, such as via public PAIR.

During prosecution on the merits, the examiner will determine whether or not the identified document is considered to be "material." If the information is not considered by the examiner to be material, the information will be removed from the official file.

Dave Talbott, Director
Patent Technology Center 3600
(571) 272-5150

SM/sm: 7/27/10

SM

UNITED STATES PATENT AND TRADEMARK OFFICE

UNITED STATES DEPARTMENT OF COMMERCE
United States Patent and Trademark Office
Address: COMMISSIONER FOR PATENTS
P.O. Box 1450
Alexandria, Virginia 22313-1450
www.uspto.gov

APPLICATION NO.	FILING DATE	FIRST NAMED INVENTOR	ATTORNEY DOCKET NO.	CONFIRMATION NO.
11/982,182	10/31/2007	Joseph A. Zupanick	17601-043004	3284

26231 7590 08/11/2010
FISH & RICHARDSON P.C.
P.O. BOX 1022
MINNEAPOLIS, MN 55440-1022

EXAMINER
KRECK, JOHN J

ART UNIT	PAPER NUMBER
3672	

NOTIFICATION DATE	DELIVERY MODE
08/11/2010	ELECTRONIC

Please find below and/or attached an Office communication concerning this application or proceeding.

The time period for reply, if any, is set in the attached communication.

Notice of the Office communication was sent electronically on above-indicated "Notification Date" to the following e-mail address(es):

PATDOCTC@fr.com

UNITED STATES PATENT AND TRADEMARK OFFICE

Commissioner for Patents
United States Patent and Trademark Office
P.O. Box 1450
Alexandria, VA 22313-1450
www.uspto.gov

AUG 10 2010

Fish & Richardson P.C.
P.O. Box 1022
Minneapolis, MN 55440-1022

In re Application of Joseph A. Zupanick Application No. 11/982,182 Filed: October 31, 2007 For: METHOD AND SYSTEM FOR ACCESSING SUBTERRANEAN DEPOSITS FROM THE SURFACE AND TOOLS THEREFOR	: : : : : : :	RESPONSE TO PETITION TO EXPUNGE FILED UNDER 37 CFR 1.59(b)

This is a response to the petition under 37 CFR 1.59(b), filed on May 11, 2009, to expunge information from the above identified application.

The decision on the petition will be held in abeyance until allowance of the application or mailing of an *Ex parte Quayle* action or a Notice of Abandonment, at which time the petition will be decided.

Petitioner requests that documents filed with an Information Disclosure Statement filed May 11, 2009, are considered to be trade secret material, proprietary information, and/or subject to a protective order, have not been otherwise made public, and that they be expunged from the record if not found to be material to the patentability of the application. The proprietary document was filed in accordance to MPEP § 724. The petition fee set forth in 37 CFR 1.17(h) has been paid.

The decision on the petition is held in abeyance because prosecution on the merits is not closed. Accordingly, it is not appropriate to make a final determination of whether or not the material requested to be expunged is "material," with "materiality" being defined as any information which the examiner considers as being important to a determination of patentability of the claims. Thus, the decision on the petition to expunge must be held in abeyance at this time.

In the meantime, the document will be closed whereby any non-Patent and Trademark Office personnel will be precluded from viewing or having access to the document, such as via public PAIR.

During prosecution on the merits, the examiner will determine whether or not the identified document is considered to be "material." If the information is not considered by the examiner to be material, the information will be removed from the official file.

Dave Talbott, Director
Patent Technology Center 3600
(571) 272-5150

SM/sm: 7/27/10

SM

UNITED STATES PATENT AND TRADEMARK OFFICE

UNITED STATES DEPARTMENT OF COMMERCE
United States Patent and Trademark Office
Address: COMMISSIONER FOR PATENTS
P.O. Box 1450
Alexandria, Virginia 22313-1450
www.uspto.gov

APPLICATION NO.	FILING DATE	FIRST NAMED INVENTOR	ATTORNEY DOCKET NO.	CONFIRMATION NO.
11/982,183	10/31/2007	Neal R. Pederson	14076-49737	2748

7590 01/26/2011
RODEY, DICKASON, SLOAN, AKIN & ROBB, PA
P.O. BOX 1888
ALBUQUERQUE, NM 87103

EXAMINER
VO, HIEU T

ART UNIT	PAPER NUMBER
3747	

MAIL DATE	DELIVERY MODE
01/26/2011	PAPER

ACKNOWLEDGEMENT OF REQUEST

Notice of Allowance/Allowability Mailed

The request to print a color drawing reference as the first paragraph in the portion of the specification containing a brief description of the drawings as required by 37 CFR 1.84 and MPEP § 608.02 has been received by the United States Patent and Trademark Office and will be entered into the specification.

571-272-4200 or 1-888-786-0101
Application Assistance Unit
Office of Data Management

FORM PTOM327-5 (Rev. 02/08)

UNITED STATES PATENT AND TRADEMARK OFFICE

Commissioner for Patents
United States Patent and Trademark Office
P.O. Box 1450
Alexandria, VA 22313-1450
www.uspto.gov

January 25, 2011

RODEY, DICKASON, SLOAN, AKIN & ROBB, PA
P.O. BOX 1888
ALBUQUERQUE NM 87103

In re Application of	: **DECISION ON PETITION**
Pederson, Neal R. et al,	
Application No. **11/982183**	: **ACCEPTANCE OF COLOR**
Filed: **10/31/2007**	: **DRAWINGS**
Attorney Docket: **14076-49737**	:

This is a decision on the Petition to Accept Color Drawings under 37 C.F.R 1.84 (a) (2), received in the United States Patent and Trademark Office (USPTO) October 31, 2007.

The petition is **GRANTED**.

A grantable petition under 37 C.F.R. 1.84(a) (2) must be accompanied by the following.

1. The fee set forth under 37 C.F.R. 1.17(h),
2. Three (3) sets of the color drawings in question, or (1) set if filed via EFS, and
3. The specification containing the following language as the first paragraph in that portion of the specification relating to the brief description of the drawings.

   "The file of this patent contains at least one drawing executed in color. Copies of this patent with color drawing(s) will be provided by the Patent and Trademark Office upon request and payment of the necessary fee."

The petition was accompanied by all of the required fees and drawings. The specification contains the appropriate language. Therefore, the petition is GRANTED.

Telephone inquires relating to this decision may be directed to the undersigned in the Office of Data Management at 571-272-4200.

/Bernadette Queen/
Quality Control Specialist
Office of Data Management
Publications Branch

UNITED STATES PATENT AND TRADEMARK OFFICE

Commissioner for Patents
United States Patent and Trademark Office
P.O. Box 1450
Alexandria, VA 22313-1450
www.uspto.gov

NU VASIVE
C/O CPA GLOBAL
PO BOX 52050
MINNEAPOLIS, MN 55402

MAILED

AUG 02 2010

OFFICE OF PETITIONS

In re Application of	:
James F. Marino, et al.	:
Application No. 11/982,185	: DECISION ON PETITION
Filed: October 31, 2007	: UNDER 37 CFR 1.78(a)(3)
Attorney Docket No. 007US6	:

This is a decision on the renewed petition under 37 CFR 1.78(a)(3), filed June 11, 2010, to accept an unintentionally delayed claim under 35 U.S.C. § 120 for the benefit of priority to the prior-filed nonprovisional applications set forth in the amendment filed with the petition.

The petition is **GRANTED**.

A petition for acceptance of a claim for late priority under 37 CFR 1.78(a)(3) is only applicable to those applications filed on or after November 29, 2000. Further, the petition is appropriate only after the expiration of the period specified in 37 CFR 1.78(a)(2)(ii). In addition, the petition under 37 CFR 1.78(a)(3) must be accompanied by:

(1) the reference required by 35 U.S.C. § 120 and 37 CFR 1.78(a)(2)(i) of the prior-filed application, unless previously submitted;
(2) the surcharge set forth in § 1.17(t); and
(3) a statement that the entire delay between the date the claim was due under 37 CFR 1.78(a)(2)(ii) and the date the claim was filed was unintentional. The Director may require additional information where there is a question whether the delay was unintentional.

All of the above requirements having been satisfied, the late claim for priority under 35 U.S.C. § 120 is accepted as being unintentionally delayed.

The granting of the petition to accept the delayed benefit claim to the prior-filed applications under 37 CFR 1.78(a)(3) should not be construed as meaning that this application is entitled

to the benefit of the prior-filed applications. In order for this application to be entitled to the benefit of the prior-filed applications, all other requirements under 35 U.S.C. § 120 and 37 CFR 1.78(a)(1) and (a)(2) must be met. Similarly, the fact that the corrected Filing Receipt accompanying this decision on petition includes the prior-filed applications should not be construed as meaning that applicant is entitled to the claim for benefit of priority to the prior-filed applications noted thereon. Accordingly, the examiner will, in due course, consider this benefit claim and determine whether the application is entitled to the benefit of the earlier filing date.

A corrected Filing Receipt, which includes the priority claim to the prior-filed nonprovisional applications, accompanies this decision on petition.

Any inquiries concerning this decision may be directed to April M. Wise at (571) 272-1642. All other inquiries concerning either the examination procedures or status of the application should be directed to the Technology Center.

This application is being forwarded to Technology Center Art Unit 3739 for consideration by the examiner of applicant's entitlement to claim benefit of priority under 35 U.S.C. § 120 to the prior-filed applications.

/dab/
April M. Wise
Petitions Examiner
Office of Petitions

ATTACHMENT: Corrected Filing Receipt

UNITED STATES PATENT AND TRADEMARK OFFICE

UNITED STATES DEPARTMENT OF COMMERCE
United States Patent and Trademark Office
Address: COMMISSIONER FOR PATENTS
P.O. Box 1450
Alexandria, Virginia 22313-1450
www.uspto.gov

APPLICATION NUMBER	FILING or 371(c) DATE	GRP ART UNIT	FIL FEE REC'D	ATTY.DOCKET.NO	TOT CLAIMS	IND CLAIMS
11/982,185	10/31/2007	3739	515	007US6	6	2

CONFIRMATION NO. 2201

CORRECTED FILING RECEIPT

30328
NuVasive
c/o CPA Global
P.O. Box 52050
Minneapolis, MN 55402

OC000000042827335

Date Mailed: 07/30/2010

Receipt is acknowledged of this non-provisional patent application. The application will be taken up for examination in due course. Applicant will be notified as to the results of the examination. Any correspondence concerning the application must include the following identification information: the U.S. APPLICATION NUMBER, FILING DATE, NAME OF APPLICANT, and TITLE OF INVENTION. Fees transmitted by check or draft are subject to collection. Please verify the accuracy of the data presented on this receipt. **If an error is noted on this Filing Receipt, please submit a written request for a Filing Receipt Correction. Please provide a copy of this Filing Receipt with the changes noted thereon. If you received a "Notice to File Missing Parts" for this application, please submit any corrections to this Filing Receipt with your reply to the Notice. When the USPTO processes the reply to the Notice, the USPTO will generate another Filing Receipt incorporating the requested corrections**

Applicant(s)

James F. Marino, La Jolla, CA;
Dan K. Ahlgren, San Diego, CA;

Assignment For Published Patent Application

NuVasive, Inc.

Power of Attorney: None

Domestic Priority data as claimed by applicant

This application is a CON of 11/489,020 07/18/2006
which is a DIV of 10/431,619 05/07/2003 PAT 7,079,883
which is a DIV of 09/325,998 06/04/1999 PAT 6,564,078
which claims benefit of 60/120,663 02/19/1999
and claims benefit of 60/113,651 12/23/1998
and claims benefit of 60/123,268 03/08/1999

Foreign Applications

If Required, Foreign Filing License Granted: 12/03/2007

The country code and number of your priority application, to be used for filing abroad under the Paris Convention, is **US 11/982,185**

Projected Publication Date: Not Applicable

Non-Publication Request: No

Early Publication Request: No
**** SMALL ENTITY ****

Title

Nerve surveillance cannulae systems

Preliminary Class

600

PROTECTING YOUR INVENTION OUTSIDE THE UNITED STATES

Since the rights granted by a U.S. patent extend only throughout the territory of the United States and have no effect in a foreign country, an inventor who wishes patent protection in another country must apply for a patent in a specific country or in regional patent offices. Applicants may wish to consider the filing of an international application under the Patent Cooperation Treaty (PCT). An international (PCT) application generally has the same effect as a regular national patent application in each PCT-member country. The PCT process **simplifies** the filing of patent applications on the same invention in member countries, but **does not result** in a grant of "an international patent" and does not eliminate the need of applicants to file additional documents and fees in countries where patent protection is desired.

Almost every country has its own patent law, and a person desiring a patent in a particular country must make an application for patent in that country in accordance with its particular laws. Since the laws of many countries differ in various respects from the patent law of the United States, applicants are advised to seek guidance from specific foreign countries to ensure that patent rights are not lost prematurely.

Applicants also are advised that in the case of inventions made in the United States, the Director of the USPTO must issue a license before applicants can apply for a patent in a foreign country. The filing of a U.S. patent application serves as a request for a foreign filing license. The application's filing receipt contains further information and guidance as to the status of applicant's license for foreign filing.

Applicants may wish to consult the USPTO booklet, "General Information Concerning Patents" (specifically, the section entitled "Treaties and Foreign Patents") for more information on timeframes and deadlines for filing foreign patent applications. The guide is available either by contacting the USPTO Contact Center at 800-786-9199, or it can be viewed on the USPTO website at http://www.uspto.gov/web/offices/pac/doc/general/index.html.

For information on preventing theft of your intellectual property (patents, trademarks and copyrights), you may wish to consult the U.S. Government website, http://www.stopfakes.gov. Part of a Department of Commerce initiative, this website includes self-help "toolkits" giving innovators guidance on how to protect intellectual property in specific countries such as China, Korea and Mexico. For questions regarding patent enforcement issues, applicants may call the U.S. Government hotline at 1-866-999-HALT (1-866-999-4158).

LICENSE FOR FOREIGN FILING UNDER

Title 35, United States Code, Section 184

Title 37, Code of Federal Regulations, 5.11 & 5.15

GRANTED

The applicant has been granted a license under 35 U.S.C. 184, if the phrase "IF REQUIRED, FOREIGN FILING LICENSE GRANTED" followed by a date appears on this form. Such licenses are issued in all applications where the conditions for issuance of a license have been met, regardless of whether or not a license may be required as

set forth in 37 CFR 5.15. The scope and limitations of this license are set forth in 37 CFR 5.15(a) unless an earlier license has been issued under 37 CFR 5.15(b). The license is subject to revocation upon written notification. The date indicated is the effective date of the license, unless an earlier license of similar scope has been granted under 37 CFR 5.13 or 5.14.

This license is to be retained by the licensee and may be used at any time on or after the effective date thereof unless it is revoked. This license is automatically transferred to any related applications(s) filed under 37 CFR 1.53(d). This license is not retroactive.

The grant of a license does not in any way lessen the responsibility of a licensee for the security of the subject matter as imposed by any Government contract or the provisions of existing laws relating to espionage and the national security or the export of technical data. Licensees should apprise themselves of current regulations especially with respect to certain countries, of other agencies, particularly the Office of Defense Trade Controls, Department of State (with respect to Arms, Munitions and Implements of War (22 CFR 121-128)); the Bureau of Industry and Security, Department of Commerce (15 CFR parts 730-774); the Office of Foreign AssetsControl, Department of Treasury (31 CFR Parts 500+) and the Department of Energy.

NOT GRANTED

No license under 35 U.S.C. 184 has been granted at this time, if the phrase "IF REQUIRED, FOREIGN FILING LICENSE GRANTED" DOES NOT appear on this form. Applicant may still petition for a license under 37 CFR 5.12, if a license is desired before the expiration of 6 months from the filing date of the application. If 6 months has lapsed from the filing date of this application and the licensee has not received any indication of a secrecy order under 35 U.S.C. 181, the licensee may foreign file the application pursuant to 37 CFR 5.15(b).

UNITED STATES PATENT AND TRADEMARK OFFICE

Commissioner for Patents
United States Patent and Trademark Office
P.O. Box 1450
Alexandria, VA 22313-1450
www.uspto.gov

Troutman Sanders LLP
The Chrysler Building
405 Lexington Avenue
New York NY 10174

MAILED

MAY 04 2011

OFFICE OF PETITIONS

In re Application of :
David M. Barcelou :
Application No. 11/982,187 : DECISION ON PETITION
Filed: October 31, 2007 :
Attorney Docket No. **ATL1CON23** :

This is a decision on the petition under the unintentional provisions of 37 CFR 1.137(b), filed March 29, 2011, to revive the above-identified application.

The petition is **GRANTED**.

This application became abandoned as a result of petitioner's failure to file an appeal brief (and fee required by 37 CFR 41.20(b)(2)) within the time period provided in 37 CFR 41.37(a)(1). As an appeal brief (and appeal brief fee) was not filed within two (2) months of the Notice of Appeal filed August 24, 2010, and no extensions of time under the provisions of 37 CFR 1.136(a) were obtained, the appeal was dismissed and the proceedings as to the rejected claims were terminated. See 37 CFR 1.197(b). As no claim was allowed, the application became abandoned on October 25, 2010. *See* MPEP 1215.04.

The petition satisfies the requirements of 37 CFR 1.137(b) in that petitioner has supplied (1) the reply in the form of a Request for Continued Examination (RCE) and fee of $405, and the submission required by 37 CFR 1.114; (2) the petition fee of $810; and (3) a proper statement of unintentional delay.

Telephone inquiries concerning this decision should be directed to the undersigned at (571) 272-4584.

This application is being referred to Technology Center AU 3694 for processing of the RCE and for appropriate action by the Examiner in the normal course of business on the amendment submitted in accordance with 37 CFR 1.114.

JoAnne Burke
Petitions Examiner
Office of Petitions

UNITED STATES PATENT AND TRADEMARK OFFICE

Commissioner for Patents
United States Patent and Trademark Office
P.O. Box 1450
Alexandria, VA 22313-1450
www.uspto.gov

JUL 1 8 2011

FISH & RICHARDSON P.C. (DA)
P.O. BOX 1022
MINNEAPOLIS MN 55440-1022

In re Application of	:	
Joseph A. Zupanick	:	DECISION ON PETITION
Application No. 11/982,232	:	TO EXPUNGE FILED
Filed: October 31, 2007	:	UNDER 37 CFR 1.59(b)
For: METHODS AND SYSTEMS FOR ACCESSING SUBTERRANEAN DEPOSITS FROM THE SURFACE	:	

This is a decision on the petition under 37 CFR 1.59(b), filed August 18, 2010, to expunge information from the above identified application.

The decision on the petition will be held in abeyance until allowance of the application or mailing of an Ex parte Quayle action or a Notice of Abandonment, at which time the petition will be decided.

Petitioner requests that the propriety information disclosed in the Information Disclosure Statement (IDS) filed on August 18, 2010 concurrently with the petition be expunged from the record. Petitioner states either: (A) that the information contains trade secret material, proprietary material and/or material that is subject to a protective order which has not been made public; or (B) that the information submitted was unintentionally submitted and the failure to obtain its return would cause irreparable harm to the party who submitted the information or to the party in interest on whose behalf the information was submitted, and the information has not otherwise been made public. The petition fee set forth in 37 CFR 1.17(g) has been paid.

The decision on the petition is held in abeyance because prosecution on the merits is not closed. Accordingly, it is not appropriate to make a final determination of whether or not the material requested to be expunged is "material," with "materiality" being defined as any information which the examiner considers as being important to a determination of patentability of the claims. Thus, the decision on the petition to expunge must be held in abeyance at this time.

During prosecution on the merits, the examiner will determine whether or not the identified document is considered to be "material." If the information is not considered by the examiner to be material, the information will be removed from the official file.

David L. Talbott, Director
Patent Technology Center 3600
(571) 272-5150

lm: 7/11/11

LM

UNITED STATES PATENT AND TRADEMARK OFFICE

Commissioner for Patents
United States Patent and Trademark Office
P.O. Box 1450
Alexandria, VA 22313-1450
www.uspto.gov

APR 16 2012

Fish & Richardson P.C.
P.O. Box 1022
Minneapolis, MN 55440-1022

In re Application of ZUPANICK, JOSEPH A.	:	
Appl. No.:11/982232	:	**RESPONSE TO PETITION**
Filed: October 31, 2007	:	**UNDER 37 CFR 1.59**
For: METHOD AND SYSTEM FOR ACCESSING	:	
SUBTERRANEAN DEPOSITS FROM THE SURFACE	:	

This is a decision on the petition under 37 CFR 1.59(b), filed February 1, 2012, to expunge information from the above identified application.

The petition is **GRANTED**.

Petitioner requests that the court documents from the Information Disclosure Statement, filed February 1, 2012, be expunged from the record

A petition under 37 CFR 1.59(b) must contain:

(A) a clear identification of the information to be expunged without disclosure of the details thereof;
(B) a clear statement that the information to be expunged is trade secret material, proprietary material, and/or subject to a protective order, and that the information has not been otherwise made public;
(C) a commitment on the part of the petitioner to retain such information for the period of any patent with regard to which such information is submitted;
(D) a statement that the petition to expunge is being submitted by, or on behalf of, the party in interest who originally submitted the information;
(E) the fee as set forth in 37 CFR 1.17(g) for a petition under 37 CFR 1.59(b)

The information in question has been determined by the undersigned to not be material to the examination of the instant application.

As the above conditions have been met, the requested material has been expunged. However, the material will not be returned to the applicants. The obligation to return documents was removed from 37 CFR 1.59 (June 30, 2003 Fed Register, Vol. 68, No. 125, 38613). The documents have

been closed from the IFW record so as not to be viewable by non-PTO personnel. This decision only applies to this application, and any other applications containing the proprietary information will need to be separately decided.

Applicant is required to retain the expunged material(s) for the life of any patent which issues on the above-identified application.

Any questions regarding this decision should be directed to David Bagnell at (571) 272-6999.

David Talbott, Director
Patent Technology Center 3600
(571) 272-5150

DT/DB: 4/3/12
LM

UNITED STATES PATENT AND TRADEMARK OFFICE

Commissioner for Patents
United States Patent and Trademark Office
P.O. Box 1450
Alexandria, VA 22313-1450
www.uspto.gov

DEAN D. SMALL
THE SMALL PATENT LAW GROUP LLP
225 S. MERAMEC, STE. 725T
SAINT LOUIS MO 63105

MAILED

DEC 23 2010

OFFICE OF PETITIONS

In re Application of	:	
Lawrence G. Hopkins	:	
Application No. 11/982,233	:	DECISION GRANTING PETITION
Filed: October 31, 2007	:	UNDER 37 CFR 1.313(c)(2)
Attorney Docket No. 301-102US2	:	

This is a decision on the petition under 37 CFR 1.313(c)(2), filed, December 22, 2010 to withdraw the above-identified application from issue after payment of the issue fee.

The petition is **GRANTED**.

The above-identified application is withdrawn from issue for consideration of a submission under 37 CFR 1.114 (request for continued examination). *See* 37 CFR 1.313(c)(2).

Petitioner is advised that the issue fee paid on November 19, 2010 cannot be refunded. If, however, this application is again allowed, petitioner may request that it be applied towards the issue fee required by the new Notice of Allowance.[1]

Telephone inquiries should be directed to Terri Johnson at (571) 272-2991.

This application is being referred to Technology Center AU 3745 for processing of the request for continued examination under 37 CFR 1.114 and for consideration of the concurrently filed information disclosure statement.

/Terri Johnson/
Terri Johnson
Petitions Examiner
Office of Petitions

---

[1] *The request to apply the issue fee to the new Notice may be satisfied by completing and returning the new Part B – Fee(s) Transmittal Form (along with any balance due at the time of submission). Petitioner is advised that the Issue Fee Transmittal Form* ***must*** *be completed and timely submitted to avoid abandonment of the application.*

UNITED STATES PATENT AND TRADEMARK OFFICE

UNITED STATES DEPARTMENT OF COMMERCE
United States Patent and Trademark Office
Address: COMMISSIONER FOR PATENTS
P.O. Box 1450
Alexandria, Virginia 22313-1450
www.uspto.gov

APPLICATION NO.	FILING DATE	FIRST NAMED INVENTOR	ATTORNEY DOCKET NO.	CONFIRMATION NO.
11/982,249	10/31/2007	Joseph A. Zupanick	17601-043007	3139

26231 7590 08/11/2010
FISH & RICHARDSON P.C.
P.O. BOX 1022
MINNEAPOLIS, MN 55440-1022

EXAMINER
KRECK, JOHN J

ART UNIT	PAPER NUMBER
3672	

NOTIFICATION DATE	DELIVERY MODE
08/11/2010	ELECTRONIC

Please find below and/or attached an Office communication concerning this application or proceeding.

The time period for reply, if any, is set in the attached communication.

Notice of the Office communication was sent electronically on above-indicated "Notification Date" to the following e-mail address(es):

PATDOCTC@fr.com

UNITED STATES PATENT AND TRADEMARK OFFICE

Commissioner for Patents
United States Patent and Trademark Office
P.O. Box 1450
Alexandria, VA 22313-1450
www.uspto.gov

AUG 10 2010

Fish & Richardson, P.C.
P.O. Box 1022
Minneapolis, MN 55440-1022

In re Application of Joseph A. Zupanick Application No. 11/982,249 Filed: October 31, 2007 For: METHOD AND SYSTEM FOR ACCESSING SUBTERRANEAN DEPOSITS FROM THE SURFACE AND TOOLS THEREFOR	: : : : : : :	RESPONSE TO PETITION TO EXPUNGE FILED UNDER 37 CFR § 1.59(b)

This is a response to the petition under 37 CFR § 1.59(b), filed September 14, 2009 to expunge information from the above identified application.

The decision on the petition will be held in abeyance until allowance of the application or mailing of an *Ex parte Quayle* action or a Notice of Abandonment, at which time the petition will be decided.

Petitioners request that documents in an Information Disclosure Statement (IDS) filed concurrently with the petition be expunged if they are found not to be material to patentability.

A proper petition under 37 CFR 1.59(b) to expunge information submitted under MPEP § 724.02, or that should have been submitted under MPEP § 724.02 (as where proprietary information is submitted in an information disclosure statement but inadvertently not submitted in a sealed envelope as discussed in MPEP § 724.02) must contain:

(A) a clear identification of the information to be expunged without disclosure of the details thereof;
(B) a clear statement that the information to be expunged is trade secret material, proprietary material, and/or subject to a protective order, and that the information has not been otherwise made public;
(C) a commitment on the part of the petitioner to retain such information for the period of any patent with regard to which such information is submitted;
(D) a statement that the petition to expunge is being submitted by, or on behalf of, the party in interest who originally submitted the information;
(E) the fee as set forth in 37 CFR 1.17(g) for a petition under 37 CFR 1.59(b).

The decision on the petition is held in abeyance because prosecution on the merits is not closed. Accordingly, it is not appropriate to make a final determination of whether or not the material requested to be expunged is "material," with "materiality" being defined as any information which the examiner considers as being important to a determination of patentability of the claims. Thus, the decision on the petition to expunge must be held in abeyance at this time.

During prosecution on the merits, the examiner will determine whether or not the identified document is considered to be "material." If the information is not considered by the examiner to be material, the information will be removed from the official file.

David Talbott, Director
Patent Technology Center 3600
(571) 272-5150

DT/tl: 07/27/2010

UNITED STATES PATENT AND TRADEMARK OFFICE

UNITED STATES DEPARTMENT OF COMMERCE
United States Patent and Trademark Office
Address: COMMISSIONER FOR PATENTS
P.O. Box 1450
Alexandria, Virginia 22313-1450
www.uspto.gov

APPLICATION NO.	FILING DATE	FIRST NAMED INVENTOR	ATTORNEY DOCKET NO.	CONFIRMATION NO.
11/982,249	10/31/2007	Joseph A. Zupanick	17601-043007	3139

26231 7590 11/08/2010
FISH & RICHARDSON P.C. (DA)
P.O. BOX 1022
MINNEAPOLIS, MN 55440-1022

EXAMINER
KRECK, JOHN J

ART UNIT	PAPER NUMBER
3672	

NOTIFICATION DATE	DELIVERY MODE
11/08/2010	ELECTRONIC

Please find below and/or attached an Office communication concerning this application or proceeding.

The time period for reply, if any, is set in the attached communication.

Notice of the Office communication was sent electronically on above-indicated "Notification Date" to the following e-mail address(es):

PATDOCTC@fr.com

UNITED STATES PATENT AND TRADEMARK OFFICE

Commissioner for Patents
United States Patent and Trademark Office
P.O. Box 1450
Alexandria, VA 22313-1450
www.uspto.gov

NOV - 5 2010

Fish & Richardson P.C.
P.O. Box 1022
Minneapolis, MN 55440-1022

In re Application of ZUPANICK, JOSEPH A. Appl. No.:11/982,249 Filed: October 31, 2007 For: METHOD AND SYSTEM FOR ACCESSING SUBTERRANEAN DEPOSITS FROM THE SURFACE AND TOOLS THEREFOR	: : : : : : : :	**DECISION ON PETITION UNDER 37 CFR 1.59**

This is a decision on the petition under 37 CFR 1.59(b), filed September 14, 2009, to expunge information from the above identified application.

The petition is **GRANTED**.

Petitioner requests that the materials disclosed in the Information Disclosure Statement filed September 14, 2009, be expunged from the record.

A petition under 37 CFR 1.59(b) must contain:

(A) a clear identification of the information to be expunged without disclosure of the details thereof;
(B) a clear statement that the information to be expunged is trade secret material, proprietary material, and/or subject to a protective order, and that the information has not been otherwise made public;
(C) a commitment on the part of the petitioner to retain such information for the period of any patent with regard to which such information is submitted;
(D) a statement that the petition to expunge is being submitted by, or on behalf of, the party in interest who originally submitted the information;
(E) the fee as set forth in 37 CFR 1.17(g) for a petition under 37 CFR 1.59(b)

The information in question has been determined by the undersigned to not be material to the examination of the instant application.

As the above conditions have been met, the requested material has been expunged. However, the material will not be returned to the applicants. The obligation to return documents was removed from 37 CFR 1.59 (June 30, 2003 Fed Register, Vol. 68, No. 125, 38613). The documents have been closed from the IFW record so as not to be viewable by non-PTO personnel. This decision only applies to this application, and any other applications containing the proprietary information will need to be separately decided.

Applicant is required to retain the expunged material(s) for the life of any patent which issues on the above-identified application.

Any questions regarding this decision should be directed to David Bagnell at (571) 272-6999.

David Talbott, Director
Patent Technology Center 3600
(571) 272-5150

Djb:11/01/10
LM

UNITED STATES PATENT AND TRADEMARK OFFICE

UNITED STATES DEPARTMENT OF COMMERCE
United States Patent and Trademark Office
Address: COMMISSIONER FOR PATENTS
P.O. Box 1450
Alexandria, Virginia 22313-1450
www.uspto.gov

APPLICATION NO.	FILING DATE	FIRST NAMED INVENTOR	ATTORNEY DOCKET NO.	CONFIRMATION NO.
11/982,269	11/01/2007	Campbell Pryde	060235	1212

26285 7590 03/11/2011
K&L GATES LLP
210 SIXTH AVENUE
PITTSBURGH, PA 15222-2613

EXAMINER
YOUNG, KEVIN L.

ART UNIT	PAPER NUMBER
2165	

MAIL DATE	DELIVERY MODE
03/11/2011	PAPER

Please find below and/or attached an Office communication concerning this application or proceeding.

The time period for reply, if any, is set in the attached communication.

UNITED STATES PATENT AND TRADEMARK OFFICE

Commissioner for Patents
United States Patent and Trademark Office
P.O. Box 1450
Alexandria, VA 22313-1450
www.uspto.gov

K&L GATES LLP
210 SIXTH AVENUE
PITTSBURGH PA 15222-2613

In re Application of:
PRYDE, Campbell et al.
Application No. 11/982,269
Filed: November 1, 2007
For: **TAXONOMY TOOL**

DECISION ON PETITION UNDER 37 C.F.R. § 1.84(a)(2) TO ACCEPT COLOR DRAWINGS

This is a decision on the petition under 37 C.F.R. § 1.84(a)(2), filed on November 1, 2007, requesting acceptance of color drawings.

The petition requests that the color drawings of Figures 2-9 be accepted in lieu of black and white drawings.

A grantable petition under 37 C.F.R. § 1.84(a)(2) must be accompanied by a fee set forth under 37 C.F.R. § 1.17(h), 3 (three) sets of the color drawings in question, and the specification must contain, or be amended to contain, the following language as the first paragraph in that portion of the specification relating to the brief description of the drawings:

"The patent or application file contains at least one drawing executed in color. Copies of this patent or patent application publication with color drawings will be provided by the U.S. Patent and Trademark Office upon request and payment of the necessary fee."

The petition was filed with the required fee and was filed with three (3) sets of color drawing Figures 2-9. Paragraph [0001] of the specification contains the required notification described above.

Accordingly, the petition is **GRANTED**.

Any inquiry regarding this decision should be directed to Eddie C. Lee at (571) 272-1732.

/Eddie C. Lee/

Eddie C. Lee
Quality Assurance Specialist, TC 2100

UNITED STATES PATENT AND TRADEMARK OFFICE

Commissioner for Patents
United States Patent and Trademark Office
P.O. Box 1450
Alexandria, VA 22313-1450
www.uspto.gov

MAILED

SEP 24 2010

OFFICE OF PETITIONS

TOPE-MCKAY & ASSOCIATES
30765 PACIFIC COAST HIGHWAY #420
MALIBU CA 90265

In re Application of	:	
Frederic Ferri	:	
Application No. 11/982,390	:	DECISION ON PETITION
Filed: October 31, 2007	:	
Attorney Docket No. YP1002-CIP	:	

This is a decision on the petition under the unintentional provisions of 37 CFR 1.137(b), filed July 16, 2010, to revive the above-identified application.

The petition is **DISMISSED**.

Any request for reconsideration of this decision must be submitted within TWO (2) MONTHS from the mail date of this decision. Extensions of time under 37 CFR 1.136(a) are permitted. The reconsideration request should include a cover letter entitled "Renewed Petition under 37 CFR 1.137(b)." This is **not** a final agency action within the meaning of 5 U.S.C. § 704.

The application became abandoned for failure to reply in a timely manner to the Notice of Non-Compliant Amendment mailed February 8, 2010, which set a shortened statutory period for reply of one (1) month or thirty days. No extensions of time under the provisions of 37 CFR 1.136(a) were obtained. Accordingly, the application became abandoned on March 9, 2010. A Notice of Abandonment was mailed on June 17, 2010.

A grantable petition under 37 CFR 1.137(b) must be accompanied by: (1) the required reply, unless previously filed; (2) the petition fee as set forth in 37 CFR 1.17(m); (3) a statement that the entire delay in filing the required reply from the due date for the reply until the filing of a grantable petition pursuant to 37 CFR 1.137(b) was unintentional; and (4) any terminal disclaimer (and fee as set forth in 37 CFR 1.20(d)) required by 37 CFR 1.137(d). Where there is a question as to whether either the abandonment or the delay in filing a petition under 37 CFR 1.137 was unintentional, the Director may require additional information. See MPEP 711.03(c)(II)(C) and (D). The instant petition lacks item (1).

As to item (1), a reply has not been received. A fee amount of $2,750 as required by the Notice mailed February 8, 2010 is outstanding.

Further correspondence with respect to this matter should be addressed as follows:

By Mail: Mail Stop PETITION
Commissioner for Patents
P. O. Box 1450
Alexandria, VA 22313-1450

By hand: U. S. Patent and Trademark Office
Customer Service Window, Mail Stop Petitions
Randolph Building
401 Dulany Street
Alexandria, VA 22314

The centralized facsimile number is **(571) 273-8300.**

Telephone inquiries concerning this decision should be directed to Kimberly Inabinet at (571) 272-4618.

/Kimberly Inabinet/

Kimberly Inabinet
Petitions Examiner
Office of Petitions

UNITED STATES PATENT AND TRADEMARK OFFICE

Commissioner for Patents
United States Patent and Trademark Office
P.O. Box 1450
Alexandria, VA 22313-1450
www.uspto.gov

TOPE-MCKAY & ASSOCIATES
30765 PACIFIC COAST HIGHWAY #420
MALIBU CA 90265

MAILED

JAN 20 2011

OFFICE OF PETITIONS

In re Application of
Frederic Ferri
Application No. 11/982,390
Filed: October 31, 2007
Attorney Docket No. YP1002-CIP

DECISION ON PETITION

This is a decision on the renewed petition under the unintentional provisions of 37 CFR 1.137(b), filed November 29, 2010, to revive the above-identified application.

The petition is **GRANTED**.

The application became abandoned for failure to reply in a timely manner to the Notice of Non-Compliant Amendment mailed February 8, 2010, which set a shortened statutory period for reply of one (1) month or thirty days. No extensions of time under the provisions of 37 CFR 1.136(a) were obtained. Accordingly, the application became abandoned on March 9, 2010. A Notice of Abandonment was mailed on June 17, 2010.

The petition satisfies the requirements of 37 CFR 1.137(b) in that petitioner has supplied (1) the reply in the form of an amendment, (2) the petition fee of $1,620, and (3) a proper statement of unintentional delay. Accordingly the amendment is accepted as being unintentionally delayed.

A one month extension of time is due in order to make the reply timely filed. A fee in the amount of $65 will be charged to deposit account 50-2691 as authorized.

Telephone inquiries concerning this decision should be directed to Kimberly Inabinet at (571) 272-4618.

This application is being referred to Technology Center AU 3764 for appropriate action by the Examiner in the normal course of business on the reply received July 16, 2010.

/Kimberly Inabinet/

Kimberly Inabinet
Petitions Examiner
Office of Petitions

UNITED STATES PATENT AND TRADEMARK OFFICE

Commissioner for Patents
United States Patent and Trademark Office
P.O. Box 1450
Alexandria, VA 22313-1450
www.uspto.gov

WELLS ST. JOHN P.S.
601 W. FIRST AVENUE, SUITE 1300
SPOKANE, WA 99201

MAILED
AUG 02 2010
OFFICE OF PETITIONS

In re Application of	:	
Ronald E. WYRICK	:	
Application No. 11/982,397	:	NOTICE UNDER 37 CFR 1.28
Filed: October 31, 2007	:	
Attorney Docket No. **WA39-068**	:	

This is a notice regarding your request for acceptance of a fee deficiency submission under 37 CFR 1.28. On September 1, 1998, the Court of Appeals for the Federal Circuit held that 37 CFR 1.28(c) is the sole provision governing the time for correction of the erroneous payment of the issue fee as a small entity. **See DH Technology v. Synergystex International, Inc. 154 F.3d 1333, 47 USPQ2d 1865 (Fed. Cir. Sept. 1, 1998).**

The Office no longer investigates or rejects original or reissue applications under 37 CFR 1.56. **1098 Off. Gaz. Pat. Office 502 (January 3, 1989)**. Therefore, nothing in this Notice is intended to imply that an investigation was done.

Your fee deficiency submission under 37 CFR 1.28 is hereby **ACCEPTED**.

This application is no longer entitled to small entity status. Accordingly, all future fees paid in this application must be paid at the large entity rate.

Inquiries related to this communication should be directed to the undersigned at (571) 272-7253.

/Monica A. Graves/
Petitions Examiner, Office of Petitions

UNITED STATES PATENT AND TRADEMARK OFFICE

Commissioner for Patents
United States Patent and Trademark Office
P.O. Box 1450
Alexandria, VA 22313-1450
www.uspto.gov

VOLPE AND KOENIG, P.C.
UNITED PLAZA
30 SOUTH 17TH STREET
PHILADELPHIA, PA 19103

MAILED
MAR 10 2011
OFFICE OF PETITIONS

In re Application of	:	
John S. Yates, Jr., et al.	:	
Application No.: 11/982,419	:	ON PETITION
Filed: October 31, 2007	:	
Attorney Docket No.: 497957	:	

This is a decision on the petition under 37 CFR 1.182, filed December 14, 2010, to change the name of joint inventor "T.R. Ramesh" to – Tiruvur R. Ramesh --.

The petition is **GRANTED**.

Office records have been updated to reflect the inventor's name change. A corrected Filing Receipt, which correctly reflects the inventor's name, accompanies this decision on petition. If the application is assigned, applicant should submit a corrected assignment document along with a cover sheet and the recording fee as set forth in 37 CFR 1.21(h) to the Assignment Division for a change in the assignment record.

As authorized, the $400 fee for the petition under 37 CFR 1.182 has been assessed to petitioner's deposit account.

Any questions concerning this matter may be directed to the undersigned at (571) 272-3204. Any questions concerning the examination procedures or status of the application should be directed to the Technology Center.

This application is being referred to Technology Center AU 2183 for further prosecution.

/SDB/

Sherry D. Brinkley
Petitions Examiner
Office of Petitions

ATTACHMENT: Corrected Filing Receipt

UNITED STATES PATENT AND TRADEMARK OFFICE

UNITED STATES DEPARTMENT OF COMMERCE
United States Patent and Trademark Office
Address: COMMISSIONER FOR PATENTS
P.O. Box 1450
Alexandria, Virginia 22313-1450
www.uspto.gov

APPLICATION NUMBER	FILING or 371(c) DATE	GRP ART UNIT	FIL FEE REC'D	ATTY.DOCKET.NO	TOT CLAIMS	IND CLAIMS
11/982,419	10/31/2007	2183	6048	AMD-004000C1	19	3

CONFIRMATION NO. 9174

CORRECTED FILING RECEIPT

3624
VOLPE AND KOENIG, P.C.
UNITED PLAZA
30 SOUTH 17TH STREET
PHILADELPHIA, PA 19103

OC000000046163527

Date Mailed: 02/24/2011

Receipt is acknowledged of this non-provisional patent application. The application will be taken up for examination in due course. Applicant will be notified as to the results of the examination. Any correspondence concerning the application must include the following identification information: the U.S. APPLICATION NUMBER, FILING DATE, NAME OF APPLICANT, and TITLE OF INVENTION. Fees transmitted by check or draft are subject to collection. Please verify the accuracy of the data presented on this receipt. **If an error is noted on this Filing Receipt, please submit a written request for a Filing Receipt Correction. Please provide a copy of this Filing Receipt with the changes noted thereon. If you received a "Notice to File Missing Parts" for this application, please submit any corrections to this Filing Receipt with your reply to the Notice. When the USPTO processes the reply to the Notice, the USPTO will generate another Filing Receipt incorporating the requested corrections**

Applicant(s)

John S. Yates JR., Needham, MA;
David L. Reese, Westborough, MA;
Korbin S. Van Dyke, Sunol, CA;
Tiruvur R. Ramesh, Mountain View, CA;
Paul H. Hohensee, Nashua, NH;

Assignment For Published Patent Application

ATI International SRL

Power of Attorney: The patent practitioners associated with Customer Number 3624

Domestic Priority data as claimed by applicant

This application is a CIP of 09/385,394 08/30/1999
which is a CIP of 09/322,443 05/28/1999 PAT 6,941,545
which is a CIP of 09/298,536 04/23/1999 ABN
which is a CIP of 09/239,194 01/28/1999 PAT 7,275,246
This application 11/982,419
is a CIP of 09/672,424 09/28/2000 ABN
which is a CON of 09/626,325 07/26/2000 PAT 7,065,633
which is a CIP of PCT/US00/02239 01/28/2000
which claims benefit of 60/176,610 01/18/2000

Foreign Applications (You may be eligible to benefit from the **Patent Prosecution Highway** program at the USPTO. Please see http://www.uspto.gov for more information.)

If Required, Foreign Filing License Granted: 09/22/2008

The country code and number of your priority application, to be used for filing abroad under the Paris Convention, is **US 11/982,419**

Projected Publication Date: Not Applicable

Non-Publication Request: No

Early Publication Request: No
Title

COMPUTER FOR EXECUTING TWO INSTRUCTION SETS AND ADDS A MACROINSTRUCTION END MARKER FOR PERFORMING ITERATIONS AFTER LOOP TERMINATION

Preliminary Class

712

PROTECTING YOUR INVENTION OUTSIDE THE UNITED STATES

Since the rights granted by a U.S. patent extend only throughout the territory of the United States and have no effect in a foreign country, an inventor who wishes patent protection in another country must apply for a patent in a specific country or in regional patent offices. Applicants may wish to consider the filing of an international application under the Patent Cooperation Treaty (PCT). An international (PCT) application generally has the same effect as a regular national patent application in each PCT-member country. The PCT process **simplifies** the filing of patent applications on the same invention in member countries, but **does not result** in a grant of "an international patent" and does not eliminate the need of applicants to file additional documents and fees in countries where patent protection is desired.

Almost every country has its own patent law, and a person desiring a patent in a particular country must make an application for patent in that country in accordance with its particular laws. Since the laws of many countries differ in various respects from the patent law of the United States, applicants are advised to seek guidance from specific foreign countries to ensure that patent rights are not lost prematurely.

Applicants also are advised that in the case of inventions made in the United States, the Director of the USPTO must issue a license before applicants can apply for a patent in a foreign country. The filing of a U.S. patent application serves as a request for a foreign filing license. The application's filing receipt contains further information and guidance as to the status of applicant's license for foreign filing.

Applicants may wish to consult the USPTO booklet, "General Information Concerning Patents" (specifically, the section entitled "Treaties and Foreign Patents") for more information on timeframes and deadlines for filing foreign patent applications. The guide is available either by contacting the USPTO Contact Center at 800-786-9199, or it can be viewed on the USPTO website at http://www.uspto.gov/web/offices/pac/doc/general/index.html.

For information on preventing theft of your intellectual property (patents, trademarks and copyrights), you may wish to consult the U.S. Government website, http://www.stopfakes.gov. Part of a Department of Commerce initiative, this website includes self-help "toolkits" giving innovators guidance on how to protect intellectual property in specific countries such as China, Korea and Mexico. For questions regarding patent enforcement issues, applicants may call the U.S. Government hotline at 1-866-999-HALT (1-866-999-4158).

LICENSE FOR FOREIGN FILING UNDER

Title 35, United States Code, Section 184

Title 37, Code of Federal Regulations, 5.11 & 5.15

GRANTED

The applicant has been granted a license under 35 U.S.C. 184, if the phrase "IF REQUIRED, FOREIGN FILING LICENSE GRANTED" followed by a date appears on this form. Such licenses are issued in all applications where the conditions for issuance of a license have been met, regardless of whether or not a license may be required as set forth in 37 CFR 5.15. The scope and limitations of this license are set forth in 37 CFR 5.15(a) unless an earlier license has been issued under 37 CFR 5.15(b). The license is subject to revocation upon written notification. The date indicated is the effective date of the license, unless an earlier license of similar scope has been granted under 37 CFR 5.13 or 5.14.

This license is to be retained by the licensee and may be used at any time on or after the effective date thereof unless it is revoked. This license is automatically transferred to any related applications(s) filed under 37 CFR 1.53(d). This license is not retroactive.

The grant of a license does not in any way lessen the responsibility of a licensee for the security of the subject matter as imposed by any Government contract or the provisions of existing laws relating to espionage and the national security or the export of technical data. Licensees should apprise themselves of current regulations especially with respect to certain countries, of other agencies, particularly the Office of Defense Trade Controls, Department of State (with respect to Arms, Munitions and Implements of War (22 CFR 121-128)); the Bureau of Industry and Security, Department of Commerce (15 CFR parts 730-774); the Office of Foreign AssetsControl, Department of Treasury (31 CFR Parts 500+) and the Department of Energy.

NOT GRANTED

No license under 35 U.S.C. 184 has been granted at this time, if the phrase "IF REQUIRED, FOREIGN FILING LICENSE GRANTED" DOES NOT appear on this form. Applicant may still petition for a license under 37 CFR 5.12, if a license is desired before the expiration of 6 months from the filing date of the application. If 6 months has lapsed from the filing date of this application and the licensee has not received any indication of a secrecy order under 35 U.S.C. 181, the licensee may foreign file the application pursuant to 37 CFR 5.15(b).

UNITED STATES PATENT AND TRADEMARK OFFICE

Commissioner for Patents
United States Patent and Trademark Office
P.O. Box 1450
Alexandria, VA 22313-1450
www.uspto.gov

David G. Heard
691-525 Tara Way
Susanville CA 96130

MAILED

AUG 23 2010

OFFICE OF PETITIONS

In re Application of
David Heard
Application No. 11/982,482
Filed: November 3, 2007

ON PETITION

This is a decision on the petition under the unintentional provisions of 37 CFR 1.137(b), filed July 15, 2010, to revive the above-identified application.

The petition is **DISMISSED**.

Any request for reconsideration of this decision must be submitted within TWO (2) MONTHS from the mail date of this decision. Extensions of time under 37 CFR 1.136(a) are permitted. The reconsideration request should include a cover letter entitled "Renewed Petition under 37 CFR 1.137(b)." This is **not** a final agency action within the meaning of 5 U.S.C. § 704.

The application became abandoned for failure to timely reply within the meaning of 37 CFR 1.113 to the final Office action, mailed October 29, 2009, which set a shortened statutory period for reply of three (3) months. No extensions of time under the provisions of 37 CFR 1.136(a) was obtained. Accordingly, the application became abandoned on January 30, 2010. The Notice of Abandonment was mailed June 2, 2010.

A grantable petition under 37 CFR 1.137(b) must be accompanied by: (1) the required reply, unless previously filed; (2) the petition fee as set forth in 37 CFR 1.17(m); (3) a statement that the entire delay in filing the required reply from the due date for the reply until the filing of a grantable petition pursuant to 37 CFR 1.137(b) was unintentional; and (4) any terminal disclaimer (and fee as set forth in 37 CFR 1.20(d)) required by 37 CFR 1.137(d). Where there is a question as to whether either the abandonment or the delay in filing a petition under 37 CFR 1.137 was unintentional, the Director may require additional information. See MPEP 711.03(c)(II)(C) and (D). The instant petition lacks item(s) (1).

The proposed reply required for consideration of a petition to revive must be a Notice of Appeal (and appeal fee required by 37 CFR 41.20(b)(2), an amendment that prima facie places the application in condition for allowance, a Request for Continued Examination and submission (37 CFR 1.114), or the filing of a continuing application under 37 CFR 1.53(b). See MPEP 711.03(c)(III)(A)(2). The amendment filed herewith petition ***does not*** prima facie place the application in condition for allowance.

Further correspondence with respect to this matter should be addressed as follows:

By Mail: Mail Stop PETITION
Commissioner for Patents
P. O. Box 1450
Alexandria, VA 22313-1450

By hand: U. S. Patent and Trademark Office
Customer Service Window, Mail Stop Petitions
Randolph Building
401 Dulany Street
Alexandria, VA 22314

The centralized facsimile number is **(571) 273-8300.**

Telephone inquiries concerning this decision should be directed to the undersigned at (571) 272-2991.

Terri Johnson
Petitions Examiner
Office of Petitions

Enclosed: Examiner's Advisory Action PTOL-303

Advisory Action Before the Filing of an Appeal Brief	Application No. 11/982,482	Applicant(s) HEARD, DAVID	
	Examiner ELIZABETH A. PLUMMER	Art Unit 3635	

--The MAILING DATE of this communication appears on the cover sheet with the correspondence address --

THE REPLY FILED 29 April 2010 FAILS TO PLACE THIS APPLICATION IN CONDITION FOR ALLOWANCE.

1. ☒ The reply was filed after a final rejection, but prior to or on the same day as filing a Notice of Appeal. To avoid abandonment of this application, applicant must timely file one of the following replies: (1) an amendment, affidavit, or other evidence, which places the application in condition for allowance; (2) a Notice of Appeal (with appeal fee) in compliance with 37 CFR 41.31; or (3) a Request for Continued Examination (RCE) in compliance with 37 CFR 1.114. The reply must be filed within one of the following time periods:
   a) ☒ The period for reply expires 3 months from the mailing date of the final rejection.
   b) ☐ The period for reply expires on: (1) the mailing date of this Advisory Action, or (2) the date set forth in the final rejection, whichever is later. In no event, however, will the statutory period for reply expire later than SIX MONTHS from the mailing date of the final rejection.

   Examiner Note: If box 1 is checked, check either box (a) or (b). ONLY CHECK BOX (b) WHEN THE FIRST REPLY WAS FILED WITHIN TWO MONTHS OF THE FINAL REJECTION. See MPEP 706.07(f).

Extensions of time may be obtained under 37 CFR 1.136(a). The date on which the petition under 37 CFR 1.136(a) and the appropriate extension fee have been filed is the date for purposes of determining the period of extension and the corresponding amount of the fee. The appropriate extension fee under 37 CFR 1.17(a) is calculated from: (1) the expiration date of the shortened statutory period for reply originally set in the final Office action; or (2) as set forth in (b) above, if checked. Any reply received by the Office later than three months after the mailing date of the final rejection, even if timely filed, may reduce any earned patent term adjustment. See 37 CFR 1.704(b).

NOTICE OF APPEAL

2. ☐ The Notice of Appeal was filed on _____. A brief in compliance with 37 CFR 41.37 must be filed within two months of the date of filing the Notice of Appeal (37 CFR 41.37(a)), or any extension thereof (37 CFR 41.37(e)), to avoid dismissal of the appeal. Since a Notice of Appeal has been filed, any reply must be filed within the time period set forth in 37 CFR 41.37(a).

AMENDMENTS

3. ☒ The proposed amendment(s) filed after a final rejection, but prior to the date of filing a brief, will not be entered because
   (a) ☒ They raise new issues that would require further consideration and/or search (see NOTE below);
   (b) ☐ They raise the issue of new matter (see NOTE below);
   (c) ☒ They are not deemed to place the application in better form for appeal by materially reducing or simplifying the issues for appeal; and/or
   (d) ☐ They present additional claims without canceling a corresponding number of finally rejected claims.

   NOTE: *See Continuation Sheet*. (See 37 CFR 1.116 and 41.33(a)).
4. ☐ The amendments are not in compliance with 37 CFR 1.121. See attached Notice of Non-Compliant Amendment (PTOL-324).
5. ☐ Applicant's reply has overcome the following rejection(s): _____.
6. ☐ Newly proposed or amended claim(s) _____ would be allowable if submitted in a separate, timely filed amendment canceling the non-allowable claim(s).
7. ☒ For purposes of appeal, the proposed amendment(s): a) ☒ will not be entered, or b) ☐ will be entered and an explanation of how the new or amended claims would be rejected is provided below or appended.
   The status of the claim(s) is (or will be) as follows:
   Claim(s) allowed: _____.
   Claim(s) objected to: _____.
   Claim(s) rejected: *1 and 2*.
   Claim(s) withdrawn from consideration: _____.

AFFIDAVIT OR OTHER EVIDENCE

8. ☐ The affidavit or other evidence filed after a final action, but before or on the date of filing a Notice of Appeal will not be entered because applicant failed to provide a showing of good and sufficient reasons why the affidavit or other evidence is necessary and was not earlier presented. See 37 CFR 1.116(e).
9. ☐ The affidavit or other evidence filed after the date of filing a Notice of Appeal, but prior to the date of filing a brief, will not be entered because the affidavit or other evidence failed to overcome all rejections under appeal and/or appellant fails to provide a showing a good and sufficient reasons why it is necessary and was not earlier presented. See 37 CFR 41.33(d)(1).
10. ☐ The affidavit or other evidence is entered. An explanation of the status of the claims after entry is below or attached.

REQUEST FOR RECONSIDERATION/OTHER

11. ☒ The request for reconsideration has been considered but does NOT place the application in condition for allowance because: See Continuation Sheet.
12. ☐ Note the attached Information *Disclosure Statement*(s). (PTO/SB/08) Paper No(s). _____
13. ☐ Other: _____.

/E. A. P./
Examiner, Art Unit 3635

Continuation of 3. NOTE: The amended claims present new limitations previously not considered, such as the attachments means being a pivot pin or the post being attached via screw. The new claims also appear to be actively claiming the post.

Continuation of 11. does NOT place the application in condition for allowance because: the arguments are not persausive. Note that many of the arguments are based on the new limitations, and all of these arguments are therefore moot. Furthermore, even if the amendent was accepted not all of the arguments would be convincing as many of the new limitations involve only functional langauge rather than a structual limitations, and some of the claims are now written as product by process claims . In addition, the scope of the arguments are not commesurate with the scope of the claims, amended or otherwise. Arguments based on limitations not found in the claims but only in the specification are not convincing.

UNITED STATES PATENT AND TRADEMARK OFFICE

Commissioner for Patents
United States Patent and Trademark Office
P.O. Box 1450
Alexandria, VA 22313-1450
www.uspto.gov

ATER WYNNE LLP
1331 NW LOVEJOY ST. SUITE 900
PORTLAND OR 97209-2785

MAILED

SEP 30 2010

OFFICE OF PETITIONS

In re Application of
Robinson, et al
Application No. 11/982,707
Filed: 2 November, 2007
Attorney Docket No. 103147-0005

DECISION ON PETITION

This is a decision on the petition under 37 C.F.R. §1.78, filed on 26 May, 2010, to accept an unintentionally delayed claim under 35 U.S.C. §120 for the benefit of the prior-filed provisional application set forth in the concurrently filed amendment.

The petition is **DISMISSED**.

A petition under 37 C.F.R. §1.78 is only applicable to those applications filed on or after November 29, 2000. Further, the petition is appropriate only after expiration of the period specified in 37 C.F.R. §1.78(a)(5)(ii) and must be filed during the pendency of the nonprovisional application. In addition, the petition must be accompanied by:

(1) the reference required by 35 U.S.C. §120 and 37 C.F.R. 1.78 to the prior-filed application, unless previously submitted;
(2) the surcharge set forth in §1.17(t); and
(3) a statement that the entire delay between the date the claim was due under 37 C.F.R. §1.78 and the date the claim was filed was unintentional. The Director may require additional information where there is a question whether the delay was unintentional.

Additionally, the instant nonprovisional application must be pending at the time of filing of the reference to the prior-filed provisional application as required by 37 C.F.R. §1.78. Further, the nonprovisional application claiming the benefit of the prior-filed provisional application must have been filed during the pendency of the prior-filed non-provisional application.

The petition lacks item (1), above.

Application No. 11/982,707

This pending nonprovisional application was filed on 2 November, 2007, within twelve months of the filing date of the prior-filed provisional application, Application No. 60/856,404 which was filed on 2 November, 2006, and for which priority was timely claimed, and during the pendency of Application No. 09/686, 206 (filed on 12 October, 2000), for which priority now is claimed, and a reference to the prior-filed non-provisional application has been included in an amendment to the first sentence of the specification following the title.

The incorporation by reference is improper and not acceptable after filing where the relationship to Application No. 09/686,206 is given in an amendment thereby setting forth a proper claim of priority. Petitioner's prior arguments in this regard have been considered, but are not persuasive.

The amendment is not acceptable as drafted since it appears that the instant application and Application 09/745,257, for which Petitioner also appears to seek priority, were not copending—the latter application having issued as Patent No. 7,168,051 on 23 January, 2007.

Accordingly, before the petition under 37 C.F.R. 1.78 can be granted, a renewed petition under 37 C.F.R. 1.78 and either a proper Application Data Sheet or a proper substitute amendment (complying with 37 C.F.R. 1.121 and 37 C.F.R. 1.76(b)(5)) deleting the incorporation by reference statement <u>and</u> the effort to claim priority to a non-co-pending application are required.

Questions concerning this matter may be directed to John Gillon at (571) 272-3214. All other inquiries concerning either the examination procedures or status of the application should be directed to the Technology Center.

This application is being forwarded to Technology Center AU 2441 for consideration by the Examiner of the claim under 35 U.S.C. §120 of the prior-filed provisional application.

Chris Bottorf
Supervisor
Office of Petitions

UNITED STATES PATENT AND TRADEMARK OFFICE

Commissioner for Patents
United States Patent and Trademark Office
P.O. Box 1450
Alexandria, VA 22313-1450
www.uspto.gov

ATER WYNNE LLP
1331 NW LOVEJOY ST. SUITE 900
PORTLAND OR 97209-2785

MAILED
FEB 03 2011
OFFICE OF PETITIONS

In re Application of	:	
Robinson, et al	:	
Application No. 11/982,707	:	DECISION ON PETITION
Filed: 2 November, 2007	:	
Attorney Docket No. 103147-0005	:	

This is a decision on the petition under 37 C.F.R. §1.78, filed on 2 November, 2010, to accept an unintentionally delayed claim under 35 U.S.C. §120 for the benefit of the prior-filed provisional application set forth in the concurrently filed amendment.

The petition is **GRANTED**.

A petition under 37 C.F.R. §1.78 is only applicable to those applications filed on or after November 29, 2000. Further, the petition is appropriate only after expiration of the period specified in 37 C.F.R. §1.78(a)(5)(ii) and must be filed during the pendency of the nonprovisional application. In addition, the petition must be accompanied by:

(1) the reference required by 35 U.S.C. §120 and 37 C.F.R. 1.78 to the prior-filed application, unless previously submitted;
(2) the surcharge set forth in §1.17(t); and
(3) a statement that the entire delay between the date the claim was due under 37 C.F.R. §1.78 and the date the claim was filed was unintentional. The Director may require additional information where there is a question whether the delay was unintentional.

Additionally, the instant nonprovisional application must be pending at the time of filing of the reference to the prior-filed provisional application as required by 37 C.F.R. §1.78. Further, the nonprovisional application claiming the benefit of the prior-filed provisional application must have been filed during the pendency of the prior-filed non-provisional application.

Application No. 11/982,707

This pending nonprovisional application was filed on 2 November, 2007, within twelve months of the filing date of the prior-filed provisional application, Application No. 60/856,404 which was filed on 2 November, 2006, and for which priority was timely claimed, and during the pendency of Application No. 09/686, 206 (filed on 12 October, 2000), for which priority now is claimed, and a reference to the prior-filed non-provisional application has been included in an amendment to the first sentence of the specification following the title. (Petitioner now has withdrawn the claim of priority as between the instant application and Application No. 09/745,257.)

The petition complies with the requirements of the regulations at 37 C.F.R. §1.78(a)(3) as to reference, surcharge and statement.

The petition for acceptance of an unintentionally delayed claim for the benefit of priority under 35 U.S.C. §120 to the above-noted, prior-filed nonprovisional and provisional applications satisfies the conditions of 37 C.F.R. §1.78(a)(3).

The petition is **granted**.

A corrected Filing Receipt, which includes the priority claim to the above-noted, prior-filed nonprovisional and provisional applications, accompanies this decision on petition.

Petitioner is reminded that the granting of this petition and the mailing of a corrected Filing Receipt should not be viewed as an indication that a determination has been made that this application is entitled to claim benefit of the prior-filed application. A determination that applicant is entitled to claim benefit of the prior-filed application will be made by the Examiner prior to the mailing of a certificate of correction.

This application is released to Technology Center 3651 for consideration of the amendment by the Examiner.

Any inquiries concerning this decision may be directed to John Gillon at (571) 272-3214. All other inquiries concerning either the examination procedures or status of the application should be directed to the Technology Center.

Chris Bottorff
Supervisory Petitions Examiner
Office of Petitions

Enclosure: Corrected Filing Receipt

UNITED STATES PATENT AND TRADEMARK OFFICE

UNITED STATES DEPARTMENT OF COMMERCE
United States Patent and Trademark Office
Address: COMMISSIONER FOR PATENTS
P.O. Box 1450
Alexandria, Virginia 22313-1450
www.uspto.gov

APPLICATION NUMBER	FILING or 371(c) DATE	GRP ART UNIT	FIL FEE REC'D	ATTY.DOCKET.NO	TOT CLAIMS	IND CLAIMS
11/982,707	11/02/2007	2441	965	103147-0005	25	3

CONFIRMATION NO. 3152

CORRECTED FILING RECEIPT

35940
ATER WYNNE LLP
1331 NW Lovejoy St. Suite 900
PORTLAND, OR 97209-2785

OC000000045830483

Date Mailed: 02/03/2011

Receipt is acknowledged of this non-provisional patent application. The application will be taken up for examination in due course. Applicant will be notified as to the results of the examination. Any correspondence concerning the application must include the following identification information: the U.S. APPLICATION NUMBER, FILING DATE, NAME OF APPLICANT, and TITLE OF INVENTION. Fees transmitted by check or draft are subject to collection. Please verify the accuracy of the data presented on this receipt. **If an error is noted on this Filing Receipt, please submit a written request for a Filing Receipt Correction. Please provide a copy of this Filing Receipt with the changes noted thereon. If you received a "Notice to File Missing Parts" for this application, please submit any corrections to this Filing Receipt with your reply to the Notice. When the USPTO processes the reply to the Notice, the USPTO will generate another Filing Receipt incorporating the requested corrections**

Applicant(s)

Jack D. Robinson, Vacaville, CA;
Peter Muller, Woodside, CA;
Timothy Noke, Santa Clara, CA;
Teng Lew Lim, Mountain View, CA;
Wallace Glausi, Menlo Park, CA;
James Cluff, Saint George, UT;
Larry Fullerton, New Hope, AL;

Assignment For Published Patent Application

ADDnCLICK, Inc.

Power of Attorney: The patent practitioners associated with Customer Number 35940

Domestic Priority data as claimed by applicant

This appln claims benefit of 60/856,404 11/02/2006
and is a CIP of 09/686,206 10/10/2000

Foreign Applications (You may be eligible to benefit from the **Patent Prosecution Highway** program at the USPTO. Please see http://www.uspto.gov for more information.)

If Required, Foreign Filing License Granted: 12/03/2007

The country code and number of your priority application, to be used for filing abroad under the Paris Convention, is **US 11/982,707**

Projected Publication Date: Not Applicable

Non-Publication Request: No

Early Publication Request: No

** SMALL ENTITY **

Title

Using internet content as a means to establish live social networks by linking internet users to each other who are simultaneously engaged in the same and/or similar content

Preliminary Class

709

PROTECTING YOUR INVENTION OUTSIDE THE UNITED STATES

Since the rights granted by a U.S. patent extend only throughout the territory of the United States and have no effect in a foreign country, an inventor who wishes patent protection in another country must apply for a patent in a specific country or in regional patent offices. Applicants may wish to consider the filing of an international application under the Patent Cooperation Treaty (PCT). An international (PCT) application generally has the same effect as a regular national patent application in each PCT-member country. The PCT process **simplifies** the filing of patent applications on the same invention in member countries, but **does not result** in a grant of "an international patent" and does not eliminate the need of applicants to file additional documents and fees in countries where patent protection is desired.

Almost every country has its own patent law, and a person desiring a patent in a particular country must make an application for patent in that country in accordance with its particular laws. Since the laws of many countries differ in various respects from the patent law of the United States, applicants are advised to seek guidance from specific foreign countries to ensure that patent rights are not lost prematurely.

Applicants also are advised that in the case of inventions made in the United States, the Director of the USPTO must issue a license before applicants can apply for a patent in a foreign country. The filing of a U.S. patent application serves as a request for a foreign filing license. The application's filing receipt contains further information and guidance as to the status of applicant's license for foreign filing.

Applicants may wish to consult the USPTO booklet, "General Information Concerning Patents" (specifically, the section entitled "Treaties and Foreign Patents") for more information on timeframes and deadlines for filing foreign patent applications. The guide is available either by contacting the USPTO Contact Center at 800-786-9199, or it can be viewed on the USPTO website at http://www.uspto.gov/web/offices/pac/doc/general/index.html.

For information on preventing theft of your intellectual property (patents, trademarks and copyrights), you may wish to consult the U.S. Government website, http://www.stopfakes.gov. Part of a Department of Commerce initiative, this website includes self-help "toolkits" giving innovators guidance on how to protect intellectual property in specific countries such as China, Korea and Mexico. For questions regarding patent enforcement issues, applicants may call the U.S. Government hotline at 1-866-999-HALT (1-866-999-4158).

LICENSE FOR FOREIGN FILING UNDER

Title 35, United States Code, Section 184

Title 37, Code of Federal Regulations, 5.11 & 5.15

GRANTED

The applicant has been granted a license under 35 U.S.C. 184, if the phrase "IF REQUIRED, FOREIGN FILING LICENSE GRANTED" followed by a date appears on this form. Such licenses are issued in all applications where the conditions for issuance of a license have been met, regardless of whether or not a license may be required as set forth in 37 CFR 5.15. The scope and limitations of this license are set forth in 37 CFR 5.15(a) unless an earlier license has been issued under 37 CFR 5.15(b). The license is subject to revocation upon written notification. The date indicated is the effective date of the license, unless an earlier license of similar scope has been granted under 37 CFR 5.13 or 5.14.

This license is to be retained by the licensee and may be used at any time on or after the effective date thereof unless it is revoked. This license is automatically transferred to any related applications(s) filed under 37 CFR 1.53(d). This license is not retroactive.

The grant of a license does not in any way lessen the responsibility of a licensee for the security of the subject matter as imposed by any Government contract or the provisions of existing laws relating to espionage and the national security or the export of technical data. Licensees should apprise themselves of current regulations especially with respect to certain countries, of other agencies, particularly the Office of Defense Trade Controls, Department of State (with respect to Arms, Munitions and Implements of War (22 CFR 121-128)); the Bureau of Industry and Security, Department of Commerce (15 CFR parts 730-774); the Office of Foreign AssetsControl, Department of Treasury (31 CFR Parts 500+) and the Department of Energy.

NOT GRANTED

No license under 35 U.S.C. 184 has been granted at this time, if the phrase "IF REQUIRED, FOREIGN FILING LICENSE GRANTED" DOES NOT appear on this form. Applicant may still petition for a license under 37 CFR 5.12, if a license is desired before the expiration of 6 months from the filing date of the application. If 6 months has lapsed from the filing date of this application and the licensee has not received any indication of a secrecy order under 35 U.S.C. 181, the licensee may foreign file the application pursuant to 37 CFR 5.15(b).

UNITED STATES PATENT AND TRADEMARK OFFICE

Commissioner for Patents
United States Patent and Trademark Office
P.O. Box 1450
Alexandria, VA 22313-1450
www.uspto.gov

GREER, BURNS & CRAIN
300 S WACKER DR
25TH FLOOR
CHICAGO IL 60606

MAILED
MAR 05 2012
OFFICE OF PETITIONS

In re Application of	:	
Yong-Jin Kim, et al.	:	
Application No. 11/982,716	:	DECISION GRANTING PETITION
Filed: November 2, 2007	:	UNDER 37 CFR 1.313(c)(2)
Attorney Docket No. 1674.79370	:	

This is a decision on the petition under 37 CFR 1.313(c)(2), filed March 1, 2012, to withdraw the above-identified application from issue after payment of the issue fee.

The petition is **GRANTED**.

The above-identified application is withdrawn from issue for consideration of a submission under 37 CFR 1.114 (request for continued examination). *See* 37 CFR 1.313(c)(2).

Petitioner is advised that the issue fee paid on January 30, 2012 cannot be refunded. If, however, this application is again allowed, petitioner may request that it be applied towards the issue fee required by the new Notice of Allowance.[1]

Telephone inquiries regarding this decision should be directed to undersigned at (571) 272-1642. All other inquiries concerning the examination or status of this application should be directed to the Technology Center.

This application is being referred to Technology Center AU 2811 for processing of the request for continued examination under 37 CFR 1.114 and for consideration of the concurrently filed information disclosure statement.

/AMW/
April M. Wise
Petitions Examiner
Office of Petitions

---

[1] *The request to apply the issue fee to the new Notice may be satisfied by completing and returning the new Part B – Fee(s) Transmittal Form (along with any balance due at the time of submission). Petitioner is advised that the Issue Fee Transmittal Form must be completed and timely submitted to avoid abandonment of the application.*

UNITED STATES PATENT AND TRADEMARK OFFICE

Commissioner for Patents
United States Patent and Trademark Office
P.O. Box 1450
Alexandria, VA 22313-1450
www.uspto.gov

Henri Duong
316 1/2 E Glendon Way
Alhambra, CA 91801

MAILED

JUN 01 2011

OFFICE OF PETITIONS

In re Application of Henri Duong :
Application No. 11/982,774 :
Filing Date: November 5, 2007 :
For: Detectable Anti-Collision Automatic :
Braking Device for Transportation :

Decision on Petition

This is a decision on the letter filed November 23, 2010, and supplemented December 3, 2010, which is being treated as a petition under 37 C.F.R. § 1.183. This is also a decision on the letter filed March 9, 2011, which is being treated as a petition under 37 C.F.R. § 1.181 requesting withdrawal of the holding of abandonment.

The petition under 37 C.F.R. § 1.183 is **dismissed**.

The petition under 37 C.F.R. § 1.181 is **dismissed**.

Any request for reconsideration must be submitted within TWO (2) MONTHS from the mail date of this decision. Extensions of time under 37 C.F.R. § 1.136(a) are NOT permitted. The reconsideration request should include a cover letter titled "Renewed Petition." and the request should *clearly* indicate whether the request is seeking reconsideration under 37 C.F.R. § 1.181, 37 C.F.R. § 1.183, or both 37 C.F.R. § 1.181 and 37 C.F.R. § 1.183.

Facts

The Office mailed a final Office action on October 13, 2010. The Office action set a shortened statutory period for reply of three months.

Petitioner filed an amendment on October 27, 2010.

The Office mailed an Advisory Action on November 12, 2010.

Petitioner filed a Request for Continued Examination ("RCE") on November 15, 2010. The RCE stated the RCE fee was being paid in the form of "My letter requesting late payment of RCE fee until patent is issued."

Petitioner filed a duplicate copy of the November 15, 2010 RCE on November 23, 2010, along with a letter requesting the Office "accept the late payment of [the] RCE fee for patent application no. 11/982,774 at a later stage until the patent is issued [in order] to avert abandonment of the application."

On December 3, 2010, Petitioner filed a letter, which requests the Office "accept [the] payment of [the] RCE fee ... at a later stage until patent approval to avert ... abandonment."

The RCE was improper because the fee for the RCE was not submitted and an extension of the time period to respond to the final Office action was not obtained. As a result, the application became abandoned on January 14, 2011.

Petitioner filed a letter on March 9, 2011, which requests the Office "activate[] patent approval of the application promptly."

The Office mailed a Notice of Abandonment on May 19, 2011.

The Petition under 37 C.F.R. § 1.183

The provisions of 37 C.F.R. § 1.114 clearly indicate the fee set forth in 37 C.F.R. § 1.17(e), which is $405 for a small entity, must be paid with the RCE. Specifically, 37 C.F.R. § 1.114 states, with emphasis added,

> (a) If prosecution in an application is closed, an applicant may request continued examination of the application by filing a submission and the *fee set forth in § 1.17(e)....*
>
> (d) If an applicant timely files a submission *and fee set forth in § 1.17(e)*, the Office will withdraw the finality of any Office action and the submission will be entered and considered.

The November 23, 2010 letter essentially requests the Office waive the requirement for the fee to be paid with the RCE and allow Petitioner to pay the fee after the application is allowed. Therefore, the letter is being treated as a petition under 37 C.F.R. § 1.183.

37 C.F.R. § 1.183 states, with emphasis added,

> In an extraordinary situation, when justice re-quires, any requirement of the regulations in this part which is not a requirement of the statutes may be suspended or waived by the Director or the Director's designee, sua sponte, or on petition of the interested party, subject to such other requirements as may be imposed. Any petition under this section *must be accompanied by the petition fee set forth in § 1.17(f).*

As explicitly stated in 37 C.F.R. § 1.183, a petition under 37 C.F.R. § 1.183 must include payment of the fee set forth in 37 C.F.R. § 1.17(f), which is $400. In other words, the Office will

not consider the merits of a petition under 37 C.F.R. § 1.183 absent payment of the required $400 fee.

The Office notes it is possible to include a request for waiver of the required $400 petition fee in the actual petition under 37 C.F.R. § 1.183. In such a case, *if* the Office determines waiver of the $400 petition fee is warranted after considering the merits of the petition, the Office can *refund* the $400.

Since the November 23, 2010 petition does not include the required $400 petition fee, the merits of the petition will not be considered and the petition is hereby dismissed.

The Petition under 37 C.F.R. § 1.181

The letter filed March 9, 2011, implicitly requests withdrawal of the holding of abandonment.

The application is abandoned as a matter of law unless a *proper* reply was filed in response to the final Office action mailed October 13, 2010.

Petitioner's failure to pay the $405 RCE fee, in conjunction with the dismissal of the request for waiver of the $405 fee, clearly indicates the November 15, 2010 RCE was not a proper reply to the final Office action. Therefore, the holding of abandonment will not be withdrawn.

If Petitioner wishes to pursue the instant application, Petitioner may wish to file a petition to revive the application under 37 C.F.R. § 1.137.

A grantable petition pursuant to 37 C.F.R. § 1.137(a) must be accompanied by a proper reply to the outstanding Office action, such as a RCE and the required $405 fee, the required petition fee of $270, and evidence establishing the entire delay in filing the required reply from the due date for the reply until the filing of a grantable petition under 37 C.F.R. § 1.137(a) was unavoidable. A blank petition under 37 C.F.R. § 1.137(a) form is enclosed for Petitioner's convenience. A PDF "fillable" version of the form can be found at http://www.uspto.gov/web/forms/sb0061.pdf.

A grantable petition pursuant to 37 C.F.R. § 1.137(b) must be accompanied by a proper reply to the outstanding Office action, such as a RCE and the required $405 fee, the required petition fee of $810, and a statement that the entire delay in filing the required reply from the due date for the reply until the filing of a grantable petition pursuant to 37 CFR 1.137(b) was unintentional. A blank petition under 37 C.F.R. § 1.137(b) form is enclosed for Petitioner's convenience. A PDF "fillable" version of the form can be found at http://www.uspto.gov/web/forms/sb0064.pdf.

Further correspondence with respect to this matter may be submitted as follows:

By Internet: A request for reconsideration may be filed electronically using EFS Web.[1] Document Code "PET.OP" should be used if the request is filed electronically.

[1] General Information concerning EFS Web can be found at http://www.uspto.gov/patents/process/file/efs/index.jsp.

By mail: Mail Stop Petition
Commissioner for Patents
P.O. Box 1450
Alexandria, VA 22313-1450

By facsimile: (571) 273-8300
Attn: Office of Petitions

By hand: U.S. Patent and Trademark Office
Customer Service Window
Randolph Building
401 Dulany Street
Alexandria, VA 22314

Telephone inquiries regarding this communication should be directed to Petitions Attorney Steven Brantley at (571) 272-3203.

Charles Steven Brantley
Senior Petitions Attorney
Office of Petitions

Enclosures: Form PTO/SB/61 (Petition under 37 C.F.R. § 1.137(a) form)
Form PTO/SB/64 (Petition under 37 C.F.R. § 1.137(b) form)
Privacy Act Notice

UNITED STATES PATENT AND TRADEMARK OFFICE

Commissioner for Patents
United States Patent and Trademark Office
P.O. Box 1450
Alexandria, VA 22313-1450
www.uspto.gov

MAILED
AUG 08 2011
OFFICE OF PETITIONS

E. I. du Pont de Nemours and Company
Legal Patent Records Center, Barley Mill Plaza
25/1122B
4417 Lancaster Pike
Wilmington DE 19805

In re Application of
HISASHI MATSUNO ET AL.
Application No. 11/982,873
Filed: November 6, 2007
Attorney Docket No. EL0763USNA

RESPONSE TO PETITION

This is a response to the petition captioned "PETITION TO EXPUNGE DOCUMENTS FILED APRIL 25, 2011" filed May 3, 2011, to expunge information from the above identified application. The petition is being treated under 37 CFR 1.59(b).

The petition is **DISMISSED**.

In the instant petition, petitioner seeks to have expunged from the file record of the instant application, "Response to Advisory Action, Request for Continued Examination and accompanying fees filed on April 25, 2011." Petitioner states that the submission of these documents was a "duplicate filing."

However, the petition is premature since prosecution of the application has not been closed by way of the allowance of the application, the mailing of an Ex parte Quayle action, or the abandonment of the application. See MPEP 724.06. Accordingly, it is not appropriate to make a final determination of whether or not the material requested to be expunged is "material," with "materiality" being defined as any information which the examiner considers as being important to a determination of patentability of the claims. Thus, the decision on the petition to expunge must be dismissed at this time. It is noted that the documents requested to be expunged are all dated April 25, 2011. Additionally, at the time the outstanding Office action was mailed on April 26, 2011, the examiner did not have an opportunity to consider the "duplicate filing."

During prosecution on the merits, the examiner will determine whether or not the identified documents are considered to be "material." If the information is not considered by the examiner to be material **and** the conditions related to the expungement of unintentionally submitted information, discussed as A-F in MPEP 724.05 II, are satisfied, the information will be removed from the official file.

After the mailing of a Notice of Allowance, an Ex parte Quayle action or a Notice of Abandonment, the petition to expunge may be renewed by applicant(s) or applicant(s)' representative. No further fee is required for such a second submission of a petition under 37 CFR 1.59 to expunge information. **In addition, the requester is cautioned to renew the petition under 37 CFR 1.59 for reconsideration by the Office prior to the point at which the present file, or file claiming priority to the present file, is forwarded for issuance of the patent. This is to be done no later than immediately after the examiner has issued a Notice of Allowance, an Ex parte Quayle action or a Notice of Abandonment. A failure to timely renew the petition to expunge prior to the point at which the file is forwarded for issuance will result in the material being retained in the patented file and thus becoming open to the public.**

The petition fee of $200 required for consideration of a petition under 37 CFR 1.59, has been charged to Deposit Account 04-1928, as authorized.

Telephone inquiries concerning this communication should be directed to the undersigned at (571) 272 - 4914.

Ramesh Krishnamurthy

Ramesh Krishnamurthy
Petitions Examiner
Office of Petitions

UNITED STATES PATENT AND TRADEMARK OFFICE

Commissioner for Patents
United States Patent and Trademark Office
P.O. Box 1450
Alexandria, VA 22313-1450
www.uspto.gov

FLYNN, THIEL, BOUTELL & TANIS, P.C.
2026 RAMBLING ROAD
KALAMAZOO MI 49008-1631

MAILED

AUG 03 2011

OFFICE OF PETITIONS

In re Application of	:	
Glick et al.	:	
Application No. 11/982,900	:	DECISION ON PETITION
Filed: November 6, 2007	:	
Attorney Docket No. 2000.P0413US	:	

This is a decision on the petition under the unintentional provisions of 37 CFR 1.137(b), filed July 18, 2011, to revive the above-identified application.

The petition is **GRANTED**.

This application became abandoned for failure to timely pay the issue and publication fees on or before July 1, 2011, as required by the Notice of Allowance and Fee(s) Due mailed April 1, 2011. Accordingly, the date of abandonment of this application is July 5, 2011. A Notice of Abandonment was mailed July 28, 2011.

The petition satisfies the requirements of 37 CFR 1.137(b) in that petitioner has supplied (1) the reply in the form of payment of the issue fee of $1,510.00 and the publication fee of $300.00,(2) the petition fee of $1,620.00; and (3) a proper statement of unintentional delay.

Further, it is not apparent whether the statement of unintentional delay was signed by a person who would have been in a position of knowing that the **entire** delay in filing the required reply from the due date for the reply until the filing of a grantable petition pursuant to 37 CFR 1.137(b) was unintentional. Nevertheless, in accordance with 37 CFR 10.18, the statement is accepted as constituting a certification of unintentional delay. However, in the event that petitioner has no knowledge that the delay was unintentional, petitioner must make such an inquiry to ascertain that, in fact, the delay was unintentional. If petitioner discovers that the delay was intentional, petitioner must notify the Office.

Additionally, it is not apparent whether the person signing the instant petition was ever given a power of attorney or authorization of agent to prosecute this patent application. In accordance with 37 CFR 1.34(a), the signature appearing on the petition shall constitute a representation to the United States Patent and Trademark Office that he/she is authorized

to represent the particular party in whose behalf he/she acts. A courtesy copy of this decision is being mailed to the address given on the petition; however, the Office will mail all future correspondence solely to the address of record.

Telephone inquiries concerning this decision should be directed to the undersigned at (571) 272-7751.

This application is being referred to the Office of Data Management for processing into a patent.

/Joan Olszewski/
Joan Olszewski
Petitions Examiner
Office of Petitions

cc: MARK L. MAKI
227 SOUTH ROSE, SUITE 5000
KALAMAZOO, MI 49007

UNITED STATES PATENT AND TRADEMARK OFFICE

Commissioner for Patents
United States Patent and Trademark Office
P.O. Box 1450
Alexandria, VA 22313-1450
www.uspto.gov

RONALD P OUDEKERK
5296 REED RD
CLARKLAKE MI 49234

MAILED

MAR 21 2011

OFFICE OF PETITIONS

In re Application of	:	
Ronald P. Oedekerk	:	
Application No. 11/983,095	:	ON PETITION
Filed: November 7, 2007	:	
Attorney Docket No. RCM-110507SAI-1	:	

This is a decision on the renewed petition to withdraw the holding of abandonment under 37 CFR 1.181, filed February 24, 2011.

The petition under 37 CFR 1.181 is **GRANTED**.

The above-identified application became abandoned for failure to timely pay the issue fee in response to the Notice of Allowance, mailed September 15, 2009. This Notice set a statutory period for reply of three months. No issue fee having been received, the application became abandoned on December 16, 2009. The Office mailed a Notice of Abandonment on December 29, 2009. Applicant filed a petition to withdraw the holding of abandonment on February 1, 2010, alleging that he timely paid the issue fee on December 15, 2009. However, the petition was dismissed in a decision mailed on April 5, 2010. The decision acknowledged that applicant filed the issue fee (in the form of a credit card payment form) on December 15, 2009. However, petitioner did not submit the issue fee with his petition, or provide any evidence that his credit card had in fact been charged.

With the instant renewed petition, petitioner has submitted the $755 issue fee.

Accordingly, the holding of abandonment is **WITHDRAWN**.

The application is being forwarded to the Office of Data Management for processing into a patent.

Telephone inquiries related to this decision should be directed to the undersigned at (571)272-3207.

Cliff Congo
Petitions Attorney
Office of Petitions

UNITED STATES PATENT AND TRADEMARK OFFICE

UNITED STATES DEPARTMENT OF COMMERCE
United States Patent and Trademark Office
Address: COMMISSIONER FOR PATENTS
P.O. Box 1450
Alexandria, Virginia 22313-1450
www.uspto.gov

APPLICATION NO.	FILING DATE	FIRST NAMED INVENTOR	ATTORNEY DOCKET NO.	CONFIRMATION NO.
11/983,096	11/07/2007	Wei Zhang	PARC-20071234-US-NP	4212

35699 7590 09/27/2011
PVF -- PARC
c/o PARK, VAUGHAN, FLEMING & DOWLER LLP
2820 FIFTH STREET
DAVIS, CA 95618-7759

EXAMINER
HEIDEMANN, JASON E

ART UNIT	PAPER NUMBER
2624	

NOTIFICATION DATE	DELIVERY MODE
09/27/2011	ELECTRONIC

Please find below and/or attached an Office communication concerning this application or proceeding.

The time period for reply, if any, is set in the attached communication.

Notice of the Office communication was sent electronically on above-indicated "Notification Date" to the following e-mail address(es):

uspto-incoming@parklegal.com
Office.Action@xerox.com

UNITED STATES PATENT AND TRADEMARK OFFICE

Commissioner for Patents
United States Patent and Trademark Office
P.O. Box 1450
Alexandria, VA 22313-1450
www.uspto.gov

September 27, 2011

PVF -- PARC
c/o PARK, VAUGHAN, FLEMING & DOWLER LLP
2820 FIFTH STREET
DAVIS CA 95618-7759

In re Application of	:	
Wei Zhang et al.	:	**DECISION ON PETITION**
Application No. 11983096	:	
Filed: 11/7/2007	:	
Attorney Docket No. PARC-20071234-US-NP	:	

This is a decision on the Petition to Accept Color Drawings under 37 C.F.R 1.84(a)(2), received in the United States Patent and Trademark Office (USPTO) September 2, 2008.

The petition is **DISMISSED.**

A grantable petition under 37 C.F.R. 1.84(a)(2) must be accompanied by the following.

1. The fee set forth under 37 C.F.R. 1.17(h),
2. Three (3) sets of the color drawings in question, (One (1) set for EFS filings), and
3. The specification containing the following language as the **first paragraph in** that portion of the specification relating to **the brief description of the drawings.**

"The patent or application file contains at least one drawing executed in color. Copies of this patent or patent application publication with color drawing(s) will be provided by the Office upon request and payment of the necessary fee."

The petition did not meet the following requirement(s). 1 ☐ 2 ☐ 3 ☑

The paragraph was placed at the beginning of the specification. It must be at the beginning of the Brief Description, i.e., before paragraph [0017].

A renewed petition filed under 37 C.F.R. 1.84(a)(2) must be filed within TWO (2) MONTHS of this decision. If a renewed petition is not filed within the TWO (2) Months of this decision the drawings will be printed in black and white.

Telephone inquires relating to this decision may be directed to the undersigned in the Office of Data Management at 571-272-4200.

/Don Fairchild/
Office of Data Management
Publications Branch

UNITED STATES PATENT AND TRADEMARK OFFICE

UNITED STATES DEPARTMENT OF COMMERCE
United States Patent and Trademark Office
Address: COMMISSIONER FOR PATENTS
P.O. Box 1450
Alexandria, Virginia 22313-1450
www.uspto.gov

APPLICATION NO.	FILING DATE	FIRST NAMED INVENTOR	ATTORNEY DOCKET NO.	CONFIRMATION NO.
11/983,096	11/07/2007	Wei Zhang	PARC-20071234-US-NP	4212

7590 10/24/2011

PVF -- PARC
c/o PARK, VAUGHAN, FLEMING & DOWLER LLP
2820 FIFTH STREET
DAVIS, CA 95618-7759

EXAMINER
HEIDEMANN, JASON E

ART UNIT	PAPER NUMBER
2624	

NOTIFICATION DATE	DELIVERY MODE
10/24/2011	ELECTRONIC

ACKNOWLEDGEMENT OF REQUEST

Notice of Allowance/Allowability Mailed

The request to print a color drawing reference as the first paragraph in the portion of the specification containing a brief description of the drawings as required by 37 CFR 1.84 and MPEP § 608.02 has been received by the United States Patent and Trademark Office and will be entered into the specification.

571-272-4200 or 1-888-786-0101
Application Assistance Unit
Office of Data Management

FORM PTOM327-5 (Rev. 02/08)

UNITED STATES PATENT AND TRADEMARK OFFICE

Commissioner for Patents
United States Patent and Trademark Office
P.O. Box 1450
Alexandria, VA 22313-1450
www.uspto.gov

October 24, 2011

PVF -- PARC
c/o PARK, VAUGHAN, FLEMING & DOWLER LLP
2820 FIFTH STREET
DAVIS CA 95618-7759

In re Application of	:	
Wei Zhang et al.	:	**DECISION ON PETITION**
Application No. 11983096	:	
Filed: 11/7/2007	:	***ACCEPTANCE OF COLOR***
Attorney Docket No. PARC-20071234-US-NP	:	***DRAWINGS***

This is a decision on the Petition to Accept Color Drawings under 37 C.F.R 1.84 (a) (2), received in the United States Patent and Trademark Office (USPTO) October 6, 2011.

The petition is **GRANTED**.

A grantable petition under 37 C.F.R. 1.84(a) (2) must be accompanied by the following.

1. The fee set forth under 37 C.F.R. 1.17(h),
2. Three (3) sets of the color drawings in question, or (1) set if filed via EFS, and
3. The specification contains appropriate language referring to the color drawings as the first paragraph in that portion of the specification relating to the brief description of the drawings.

The petition was accompanied by all of the required fees and drawings. The specification contains the appropriate language. Therefore, the petition is GRANTED.

Telephone inquires relating to this decision may be directed to the undersigned in the Office of Data Management at 571-272-4200.

/Don Fairchild/
Office of Data Management
Publications Branch

UNITED STATES PATENT AND TRADEMARK OFFICE

Commissioner for Patents
United States Patent and Trademark Office
P.O. Box 1450
Alexandria, VA 22313-1450
www.uspto.gov

ZUBER & TAILLIEU LLP
10866 WILSHIRE BLVD., SUITE 300
LOS ANGELES CA 90024

MAILED

AUG 30 2010

OFFICE OF PETITIONS

In re Application of	:	
Morgan, Scott David	:	
Application No. 11/983,099	:	DECISION ON PETITION
Filed: November 6, 2007	:	
Attorney Docket No. 1023-1002	:	

This is a decision on the petition, filed July 16, 2010, which is being treated as a petition under 37 CFR 1.181 (no fee) requesting withdrawal of the holding of abandonment in the above-identified application.

The petition is **DISMISSED**.

This application was held abandoned for failure to reply to the Notice of Noncompliant Amendment under 37 CFR 1.121, mailed November 27, 2009, which set a one (1) month statutory period for reply. A Notice of Abandonment was mailed on June 21, 2010.

Petitioner asserts that the Office action dated November 27, 2009 was not received.

A review of the written record indicates no irregularity in the mailing of the Office action, and, in the absence of any irregularity, there is a strong presumption that the Office action was properly mailed to the practitioner at the address of record. This presumption may be overcome by a showing that the Office action was not in fact received. In this regard, the showing required to establish the failure to receive the Office action must consist of the following:

> (1) A statement from the practitioner describing the system used for recording an Office action received at the correspondence address of record with the USPTO. The statement should establish that the docketing system is sufficiently reliable.
>
> (2) A statement from the practitioner that the Office action was not received at the correspondence address of record, and that a search of the practitioner's record(s), including any file jacket or the equivalent, and the application contents, indicates that the Office action was not received.
>
> (3) A copy of the record(s) used by the practitioner where the non-received Office action would have been entered had it been received is required. A copy of the practitioner's record(s) required to show non-receipt of the Office action should include the master docket for the firm.

See MPEP § 711.03(c) under subheading "Petition to Withdraw Holding of Abandonment Based on Failure to Receive Office Action," and "Withdrawing the Holding of Abandonment When

Office Actions Are Not Received," 1156 Official Gazette 53 (November 16, 1993).

The instant petition does not comply with items listed above. Any renewed petition under 37 CFR 1.181 must include statements complying with the above, along with a copy of the docket records.

If petitioner cannot provide the evidence necessary listed above, or simply does not wish to, petitioner may wish to consider filing a petition stating that the delay was unintentional. An "unintentional" petition under 37 CFR 1.137(b) must be accompanied by the $810.00 petition fee.

The filing of a petition under 37 CFR 1.137(b) cannot be intentionally delayed and therefore must be filed promptly. A person seeking revival due to unintentional delay cannot make a statement that the delay was unintentional unless the entire delay, including the date it was discovered that the application was abandoned until the filing of the petition to revive under 37 CFR 1.137(b), was unintentional. A statement that the delay was unintentional is not appropriate if petitioner intentionally delayed the filing of a petition for revival under 37 CFR 1.137(b).

Further correspondence with respect to this matter should be addressed as follows:

By mail: Mail Stop PETITIONS
Commissioner for Patents
Post Office Box 1450
Alexandria, VA 22313-1450

By hand: Customer Window located at:

U.S. Patent and Trademark Office
Customer Service Window Randolph Building
401 Dulany Street
Alexandria, VA 22314

By fax: (571) 273-8300
ATTN: Office of Petitions

Any questions concerning this matter may be directed to the undersigned at (571) 272-3206.

Liana Walsh
Petitions Examiner
Office of Petitions

UNITED STATES PATENT AND TRADEMARK OFFICE

Commissioner for Patents
United States Patent and Trademark Office
P.O. Box 1450
Alexandria, VA 22313-1450
www.uspto.gov

ZUBER & TAILLIEU LLP
10866 WILSHIRE BLVD., SUITE 300
LOS ANGELES CA 90024

MAILED

OCT 14 2010

OFFICE OF PETITIONS

In re Application of	:	
Morgan, Scott David	:	
Application No. 11/983,099	:	DECISION ON PETITION
Filed: November 6, 2007	:	
Attorney Docket No. 1023-1002	:	

This is a decision on the renewed petition, filed September 15, 2010, which is being treated as a petition under 37 CFR 1.181 (no fee) requesting withdrawal of the holding of abandonment in the above-identified application.

The petition is **GRANTED**.

This application was held abandoned for failure to reply to the Notice of Noncompliant Amendment under 37 CFR 1.121, mailed November 27, 2009, which set a one (1) month shortened statutory period for reply. A Notice of Abandonment was mailed on June 21, 2010.

Petitioner asserts that the Office action dated November 27, 2009 was not received.

A review of the written record indicates no irregularity in the mailing of the Office action, and, in the absence of any irregularity, there is a strong presumption that the Office action was properly mailed to the practitioner at the address of record. This presumption may be overcome by a showing that the Office action was not in fact received. In this regard, the showing required to establish the failure to receive the Office action must consist of the following:

(1) A statement from the practitioner describing the system used for recording an Office action received at the correspondence address of record with the USPTO. The statement should establish that the docketing system is sufficiently reliable.

(2) A statement from the practitioner that the Office action was not received at the correspondence address of record, and that a search of the practitioner's record(s), including any file jacket or the equivalent, and the application contents, indicates that the Office action was not received.

(3) A copy of the record(s) used by the practitioner where the non-received Office action would have been entered had it been received is required. A copy of the practitioner's record(s) required to show non-receipt of the Office action should include the master docket for the firm.

See MPEP § 711.03(c) under subheading "Petition to Withdraw Holding of Abandonment Based on Failure to Receive Office Action," and "Withdrawing the Holding of Abandonment When Office Actions Are Not Received," 1156 Official Gazette 53 (November 16, 1993).

The petition satisfies the above-stated requirements. Accordingly, the application was not abandoned in fact.

In view of the above, the Notice of Abandonment is hereby vacated and the holding of abandonment withdrawn.

This application is being referred to the Technology Center technical support staff of Art Unit 3611 for re-mailing the Office action of November 27, 2009. The period for reply will run from the mailing date of the Office action.

Liana Walsh
Petitions Examiner
Office of Petitions

UNITED STATES PATENT AND TRADEMARK OFFICE

Commissioner for Patents
United States Patent and Trademark Office
P.O. Box 1450
Alexandria, VA 22313-1450
www.uspto.gov

MAILED
SEP 27 2011
OFFICE OF PETITIONS

FELDMAN LAW GROUP, P.C.
220 East 42nd Street, Suite 3304
NEW YORK NY 10017

In re Application of	:	
Roy Moussaeiff et al.	:	
Application No. 11/983,181	:	DECISION ON PETITION
Filed: November 7, 2007	:	TO WITHDRAW
Attorney Docket No. 384.00	:	FROM RECORD
	:	

This is a decision on the Request to Withdraw as attorney or agent of record under 37 C.F.R. § 1.36(b), filed September 19, 2011.

The request is **NOT APPROVED**.

A review of the file record indicates that the power of attorney in this case was not appointed to attorneys/agents associated with customer number 76943. Attorneys were appointed by their registration numbers. Accordingly, the request to withdraw cannot be granted at this time.

The address of record will remain the same until further notified by the applicant.

Telephone inquiries concerning this decision should be directed to Kimberly Inabinet at 571-272-4618.

Kimberly Inabinet
Petitions Examiner
Office of Petitions

UNITED STATES PATENT AND TRADEMARK OFFICE

Commissioner for Patents
United States Patent and Trademark Office
P.O. Box 1450
Alexandria, VA 22313-1450
www.uspto.gov

FELDMAN LAW GROUP, P.C.
220 East 42nd Street, Suite 3304
NEW YORK NY 10017

MAILED

OCT 19 2011

OFFICE OF PETITIONS

In re Application of	:	
Roy Moussaeiff et al.	:	
Application No. 11/983,181	:	DECISION ON PETITION
Filed: November 7, 2007	:	TO WITHDRAW
Attorney Docket No. 384.00	:	FROM RECORD

This is a decision on the renewed Request to Withdraw as attorney or agent of record under 37 C.F.R. § 1.36(b), filed October 11, 2011.

The request is **APPROVED**.

A grantable request to withdraw as attorney/agent of record must be signed by every attorney/agent seeking to withdraw or contain a clear indication that one attorney is signing on behalf of another/others. A request to withdraw will not be approved unless at least 30 (thirty) days would remain between the date of approval and the later of the expiration date of a time to file a response or the expiration date of the maximum time period which can be extended under 37 C.F.R. § 1.136(a).

The request was signed by Stephen E. Feldman on behalf of all attorneys/agents of record. All attorneys/agents of record have been withdrawn.

Applicant is reminded that there is no attorney of record at this time.

The correspondence address will remain the same.

Telephone inquiries concerning this decision should be directed to Kimberly Inabinet at 571-272-4618.

/Kimberly Inabinet/

Kimberly Inabinet
Petitions Examiner
Office of Petitions

UNITED STATES PATENT AND TRADEMARK OFFICE

UNITED STATES DEPARTMENT OF COMMERCE
United States Patent and Trademark Office
Address: COMMISSIONER FOR PATENTS
P.O. Box 1450
Alexandria, Virginia 22313-1450
www.uspto.gov

APPLICATION NUMBER	FILING OR 371(C) DATE	FIRST NAMED APPLICANT	ATTY. DOCKET NO./TITLE
11/983,181	11/07/2007	Roy Moussaeiff	384.00

CONFIRMATION NO. 4105

POWER OF ATTORNEY NOTICE

76943
FELDMAN LAW GROUP, P.C.
220 East 42nd Street, Suite 3304
NEW YORK, NY 10017

OC000000050458591

Date Mailed: 10/19/2011

NOTICE REGARDING CHANGE OF POWER OF ATTORNEY

This is in response to the Power of Attorney filed 10/11/2011.

- The withdrawal as attorney in this application has been accepted. Future correspondence will be mailed to the new address of record. 37 CFR 1.33.

/kainabinet/

Office of Data Management, Application Assistance Unit (571) 272-4000, or (571) 272-4200, or 1-888-786-0101

UNITED STATES PATENT AND TRADEMARK OFFICE

Commissioner for Patents
United States Patent and Trademark Office
P.O. Box 1450
Alexandria, VA 22313-1450
www.uspto.gov

Ross J. Oehler
CEPHALON, Inc.
41 MOORES ROAD
PO BOX 4011
FRAZER PA 19355

MAILED
AUG 25 2011
OFFICE OF PETITIONS

In re Application of	:	
Lesur et al.	:	
Application No. 11/983,237	:	ON APPLICATION FOR
Filed: November 8, 2007	:	PATENT TERM ADJUSTMENT
Docket No. CP340A	:	

This is in response to the APPLICATION FOR PATENT TERM ADJUSTMENT UNDER 37 CFR 1.705(b), filed August 17, 2011. Applicants submit that the patent term adjustment to be indicated on the patent is two hundred sixty-four (264) days, not fifty-six (56) days as calculated by the Office as of the mailing of the initial determination of patent term adjustment.

The application for patent term adjustment is **DISMISSED**.

On July 26, 2011, the Office mailed the Determination of Patent Term Adjustment under 35 U.S.C. 154(b) in the above-identified application. The Notice stated that the patent term adjustment to date is 56 days. Applicants argue a 240 day adjustment should be entered, pursuant to 37 CFR 1.702(a)(2), for the delay in fully replying to their February 19, 2010 amendment.

On February 19, 2010 applicants filed a reply to a final Office action. On March 8, 2010, the Office mailed an Advisory action, informing applicants that the February 19, 2010 reply failed to place the application in *prima facie* condition for allowance. On March 16, 2010 applicants filed a notice of appeal and a request for pre-appeal conference. On June 9, 2010, the Office mailed a Notice of Panel Decision from Pre-Appeal Brief Review that stated the rejection was withdrawn and a new Office action would be mailed. On July 21, 2010, the Office mailed a final Office action.

On January 10, 2011, the Office mailed correspondence informing applicants that the finality of the July 21, 2010 Office action was withdrawn, and that another Office action would be mailed. On February 14, 2010, the Office mailed another Office action.

Applicants argue the July 21, 2010 Office action should be ignored and the February 14, 2011 Office action be considered the response to applicants' February 19, 2010 reply.

Pursuant to 37 CFR 1.703(a)(2), the period of adjustment is the number of days, if any, in the period beginning on the day after the date that is four months after the date a reply under 1.111 was filed and ending on the date of mailing of either an action under 35 U.S.C. 132, or a notice of allowance under 35 U.S.C. 151, whichever occurs first.

Applicants argue the calculation should begin on June 20, 2010, the date that is 4 months after applicants' reply was filed, and end on February 15, 2011, the date the Office mailed the ***second*** Office action in response, which yields 240 days.)

Applicants in essence argue that the February 14, 2011 Office action "vacated" the Office action of July 21, 2010, and as such the Office action of July 21, 2010 should be treated as not having been issued for purposes of determining whether the issuance of the patent was delayed due to the failure of the USPTO to take action within 4 months of the date of applicants' filing a reply under 1.111. Applicants' argument has been considered but is not persuasive.

The vacatur of an Office action sets aside or withdraws any rejection, objection or requirement in an Office action, as well as the requirement that the applicant timely reply to the Office action to avoid abandonment under 35 U.S.C. § 133. The vacatur of an Office action signifies that the Office action has been set aside, voided, or withdrawn as of the date of the vacating Office action or notice. The vacatur of an Office action, however, does **not** signify that the vacated Office action is void *ab initio* and is to be treated as if the USPTO had never issued the Office action. The patent examination process provided for in 35 U.S.C. §§ 131 and 132 contemplates that Office actions containing rejections, objections or requirements will be issued, and that the applicant will respond to these Office action, "with or without amendment." (35 U.S.C. § 132(a)). The mere fact that an examiner or other USPTO employee upon further reflection determines that an Office action, or that a rejection, objection or requirement in an Office action, is not

correct and must be removed does not warrant treating the Office action as void *ab initio* and as if the USPTO had never issued the Office action.

The USPTO appreciates that there may be situations in which it is appropriate to treat an Office action or notice issued in an application as void *ab initio* and as if the USPTO had never issued the Office action. However, these would be extremely rare situations, such as the issuance of an Office action or notice by an employee who does not have the authority to issue that type of Office action or notice, the issuance of an Office action or notice in the wrong application, or the issuance of an Office action or notice containing language not appropriate for inclusion in an official document. In essence, the situations in which it is appropriate to treat an Office action or notice issued in an application as void *ab initio* and as if the USPTO had never issued the Office action are the situations in which it is appropriate to expunge an Office action or notice from the USPTO's record of the application. That is simply **not** the case in this situation.

Applicants are entitled to day-to-day adjustment if the USPTO delays the issuance of a patent by failing to mail either an action under 35 U.S.C. 132 or a notice of allowance under 35 U.S.C. 151, whichever occurs first, within 4 months of applicants filing a reply under 1.111.

The fact that the Office later set aside the final Office action of July 21, 2010 does not negate the fact that a final Office action was mailed on July 21, 2010. Unless expunged from the record (which is not warranted in this situation), for purposes of calculating patent term adjustment, the Office action entered by the examiner on July 21, 2010, was properly used to determine whether the USPTO delayed the issuance of the above-identified patent by failing to mail either an action under 35 U.S.C. 132 or a notice of allowance under 35 U.S.C. 151, whichever occurs first, within four months of the filing of applicants' reply under 1.111, per 37 CFR 1.702(a)(2). *See Changes to Implement Patent Term Adjustment under Twenty-Year Patent Term*, 65 *Fed. Reg.* 54366 (Sept. 18, 2000) (final rule).

Given the decision by the panel, applicants were properly accorded 32 days for Office delay in mailing an Office action in response to the February 19, 2010 amendment. Pursuant to 37 CFR 1.702(a)(2), the calculation is from the day after four months after February 19, 2010, June 20, 2010, to the date the final Office action was mailed, July 21, 2010.

The Office properly entered 32 days of patent term adjustment in connection with the mailing the final Office action on July 21, 2010 and the subsequent mailing of another Office action on February 14, 2011, and no changes to the patent term calculation will be made.

In view thereof, the determination of patent term adjustment at the time of the mailing of the notice of allowance remains 56 days (75 - 19).

The Office acknowledges receipt of the $200.00 fee set forth in 37 CFR 1.18(e) for consideration of the application for patent term adjustment under 37 CFR 1.705(b). No additional fees are required.

Any request for reconsideration of the patent term adjustment indicated on the patent must be timely filed within 2 months after issuance pursuant to 37 CFR 1.705(d) and must include payment of the required fee under 37 CFR 1.18(e).

Applicants are reminded that the issue fee, publication fee, and a completed Part B- Fee(s) Transmittal must be submitted no later than October 26, 2011.

Telephone inquiries specific to this decision should be directed to the undersigned at (571) 272-3230.

Shirene Willis Brantley

Shirene Willis Brantley
Senior Petitions Attorney
Office of Petitions

UNITED STATES PATENT AND TRADEMARK OFFICE

Commissioner for Patents
United States Patent and Trademark Office
P.O. Box 1450
Alexandria, VA 22313-1450
www.uspto.gov

MORRISON & FOERSTER LLP
755 PAGE MILL RD
PALO ALTO, CA 94304-1018

MAILED
FEB 18 2011
OFFICE OF PETITIONS

In re Application of	:	
Matthew J. Partlett	:	
Application No. 11/983,238	:	DECISION ON PETITION
Filed: November 7, 2007		TO WITHDRAW FROM RECORD
Attorney Docket No. 3485-P10388US	:	
	:	

This is a decision on the Request to Withdraw as attorney or agent of record under 37 C.F.R. § 1.36(b), filed January 14, 2011.

The request is **NOT APPROVED** because it is moot.

A review of the file record indicates that on January 26, 2011 the power of attorney to Morrison & Foerster LLP was revoked by the assignee of the patent application. Accordingly, the request to withdraw under 37 C.F.R. § 1.36(b) is moot.

All future communications from the Office will be directed to the below-listed address until otherwise notified by applicant.

Telephone inquires concerning this decision should be directed to the undersigned at 571-272- 7751. All other inquires concerning either the examination or status of the application should be directed to the Technology Center.

Joan Olszewski
Petitions Examiner
Office of Petitions

cc: TRASKBRITT, P.C.
P.O. BOX 2550
SALT LAKE CITY UT 84110

UNITED STATES PATENT AND TRADEMARK OFFICE

Commissioner for Patents
United States Patent and Trademark Office
P.O. Box 1450
Alexandria, VA 22313-1450
www.uspto.gov

HONEYWELL/S&S
Patent Services
101 Columbia Road
P.O.Box 2245
Morristown NJ 07962-2245

MAILED
JAN 27 2012
OFFICE OF PETITIONS

In re Patent No. 8,067,947	
Anilkumar et al.	DECISION ON REQUEST FOR
Issue Date: November 29, 2011	RECONSIDERATION OF
Application No. 11/983,262	PATENT TERM ADJUSTMENT
Filed: November 8, 2007	
Attorney Docket No. H0016711-0769	
Title: LOW NOISE DIFFERENTIAL CHARGE AMPLIFIER FOR MEASURING DISCRETE CHARGES IN NOISY AND CORROSIVE ENVIRONMENTS	

This is a decision on the petition filed on December 21, 2011, which is being treated as a petition under 37 CFR 1.705(d) requesting that the patent term adjustment indicated on the above-identified patent be corrected to indicate that the term of the above-identified patent is extended or adjusted by one thousand fifty-five (1,055) days.

The petition to correct the patent term adjustment to indicate one thousand fifty-five (1,055) days is **DISMISSED.**

Patentees dispute the 35 day reduction for the submission of replacement drawings pursuant 37 CFR 1.704 (c)(10). Patentees maintain the submission on September 26, 2011 was a response to a Notice to File Corrected Application Papers ("Notice") mailed September 6, 2011. Patentees state they replied timely and the submission did not delay the patent issuance in any way.

Patentees' argument has been considered but is not persuasive. Patentees acknowledge submitting a supplemental declaration after the mailing of the notice of allowance. The filing of supplemental declaration after the mailing of a notice of allowance is a basis for reduction of patent term adjustment.

37 CFR § 1.704(c)(10) provides that:

Submission of an amendment under § 1.312 or other paper after a notice of allowance has been given or mailed, in which case the period of adjustment set forth in § 1.703 shall be reduced by the lesser of:

(i) The number of days, if any, beginning on the date the amendment under § 1.312 or other paper was filed and ending on the mailing date of the Office action or notice in response to the amendment under § 1.312 or such other paper;

or

(ii) Four months;

In this instance, it is undisputed that the supplemental declaration was filed after the mailing of the notice of allowance. Accordingly, pursuant to § 1.704(c)(10), the patent term adjustment was properly reduced by sixty-five (65) days beginning on September 26, 2011 and ending on November 29, 2011 when the patent issued.

By Notice entitled *Clarification of 37 CFR 1.704(c)(10) - Reduction of Patent Term Adjustment for Certain Types of Papers Filed After a Notice of Allowance*, 1247 OG 111 (June 26, 2001), the Director set forth examples of papers deemed not to cause substantial interference and delay in the patent issue process. Other than those papers identified in this Notice, all papers filed after allowance of an application substantially delay the Office's ability to process an application for a patent because the Office does not wait until payment of the Issue Fee to begin the patent issue process. As a result, 37 CFR 1.704(c)(10) does not distinguish between papers that are and are not required by the Office.

In view thereof, the patent is entitled to an overall adjustment of 990 days.

The address provided on the petition differs from the correspondence address of record. A courtesy copy of this decision is being mailed to the address provided on the instant request. However, until otherwise instructed, all future correspondence regarding this application file will be directed solely to the correspondence address of record

Nothing in this decision shall be construed as a waiver of the requirement of 35 U.S.C. 154(b)(4) that any civil action by an applicant dissatisfied with a determination made by the Director under 35 U.S.C. 154(b)(3) be filed in the United States District Court for the District of Columbia within 180 days after the grant of the patent.

The Office acknowledges submission of the $200.00 fee set forth in 37 CFR 1.18(e). No additional fees are required.

Telephone inquiries specific to this matter should be directed to Petitions Attorney, Charlema Grant at (571) 272-3215.

Charlema Grant
Attorney Advisor
Office of Petitions

UNITED STATES PATENT AND TRADEMARK OFFICE

UNITED STATES DEPARTMENT OF COMMERCE
United States Patent and Trademark Office
Address: COMMISSIONER FOR PATENTS
P.O. Box 1450
Alexandria, Virginia 22313-1450
www.uspto.gov

APPLICATION NO.	FILING DATE	FIRST NAMED INVENTOR	ATTORNEY DOCKET NO.	CONFIRMATION NO.
11/983,318	11/08/2007	Bruce J. Kokko	20217 (GP-06-18)	4431

7590 05/05/2011
Georgia-Pacific LLC
133 Peachtree Street NE - GA030-41
ATLANTA, GA 30303

EXAMINER
MINSKEY, JACOB T

ART UNIT	PAPER NUMBER
1741	

MAIL DATE	DELIVERY MODE
05/05/2011	PAPER

ACKNOWLEDGEMENT OF REQUEST

Notice of Allowance/Allowability Mailed

The request to print a color drawing reference as the first paragraph in the portion of the specification containing a brief description of the drawings as required by 37 CFR 1.84 and MPEP § 608.02 has been received by the United States Patent and Trademark Office and will be entered into the specification.

571-272-4200 or 1-888-786-0101
Application Assistance Unit
Office of Data Management

FORM PTOM327-5 (Rev. 02/08)

UNITED STATES PATENT AND TRADEMARK OFFICE

Commissioner for Patents
United States Patent and Trademark Office
P.O. Box 1450
Alexandria, VA 22313-1450
www.uspto.gov

May 5, 2011

Georgia-Pacific LLC
133 Peachtree Street NE - GA030-41
ATLANTA GA 30303

In re Application of	:	
Bruce J. Kokko	:	**DECISION ON PETITION**
Application No. 11983318	:	
Filed: 11/8/2007	:	***ACCEPTANCE OF COLOR***
Attorney Docket No. 20217 (GP-06-18)	:	***DRAWINGS***

This is a decision on the Petition to Accept Color Drawings under 37 C.F.R 1.84 (a) (2), received in the United States Patent and Trademark Office (USPTO) November 8, 2007.

The petition is **GRANTED**.

A grantable petition under 37 C.F.R. 1.84(a) (2) must be accompanied by the following.

1. The fee set forth under 37 C.F.R. 1.17(h),
2. Three (3) sets of the color drawings in question, or (1) set if filed via EFS, and
3. The specification contains appropriate language referring to the color drawings as the first paragraph in that portion of the specification relating to the brief description of the drawings.

The petition was accompanied by all of the required fees and drawings. The specification contains the appropriate language. Therefore, the petition is GRANTED.

Telephone inquires relating to this decision may be directed to the undersigned in the Office of Data Management at 571-272-4200.

/Don Fairchild/
Office of Data Management
Publications Branch

UNITED STATES PATENT AND TRADEMARK OFFICE

Commissioner for Patents
United States Patent and Trademark Office
P.O. Box 1450
Alexandria, VA 22313-1450
www.uspto.gov

Date Mailed : April 27, 2011
Serial No. : 11/983331
Patent No. : 7,722,761 B2
Patent Issued : May 25, 2010
Inventor(s) : Maurizio Moretto
Title : FILTERING DEVICE WITH FLOW ADJUSTER

Re: Request for Certificate of Correction

Consideration has been given your request for the issuance of a certificate of correction for the above identified patent..

Respecting the alleged error noted in your request, failure to perfect a claim to foreign priority benefit prior to issuance of the patent may be cured by filing a reissue application. Brenner v. State of Israel, 400 F.2d 789. 158 USPQ 584 (D, C, Cur, 1968).

In view of the foregoing, your request is hereby denied.

Magdalene Talley
For Mary Francis Diggs, Supervisor
Decisions and Certificate
Of Correction Branch
(571)272-0423
Fax 571-270-9942

Gottlieb, Rackman & Reisman
270 Madison Ave., 8th Floor
New York, NY 10018

MD/mt

SPE RESPONSE FOR CERTIFICATE OF CORRECTION

M.T

Paper No.: 04262011

DATE : April 20, 2011

TO SPE OF : ART UNIT 1778
SUBJECT : Request for Certificate of Correction for Appl. No. 11/983331 patent No.:7722761
C of C mailroom date:--04-15-11

Please respond to this request for a certificate of correction within 7 days.

Please review the requested changes/corrections as shown in the **COCIN** document(s) in the IFW application image. No new matter should be introduced, nor should the scope or meaning of the claims be changed.

Please complete the response (see below) and forward the completed response to scanning using document code **COCX**.

Magdalene Talley

Certificates of Correction Branch

571-272- 0423

Thank You For Your Assistance

The request for issuing the above-identified correction(s) is hereby:
Note your decision on the appropriate box.

- ☐ **Approved** — **All** changes apply.
- ☐ **Approved in Part** — Specify below which changes **do not** apply.
- X **Denied** — State the reasons for denial below.

Comments: Failure to perfect a claim to foreign priority benefit prior to issuance of the patent may be cured by filing a reissue application. Brenner v. State of Israel, 400 F.2d 789, 158 USPQ 584 (D.C. Cir. 1968).

/Terry K. Cecil/

Art Unit 1778

UNITED STATES PATENT AND TRADEMARK OFFICE

Commissioner for Patents
United States Patent and Trademark Office
P.O. Box 1450
Alexandria, VA 22313-1450
www.uspto.gov

GOTTLIEB RACKMAN & REISMAN PC
270 MADISON AVENUE
8TH FLOOR
NEW YORK NY 10016-0601

MAILED

OCT 06 2011

OFFICE OF PETITIONS

Patent No. 7,722,761	: DECISION DISMISSING PETITION
Issued: 05/25/2010	: UNDER 37 CFR 1.78(a)(3)
Application No. 11/983,331	:
Filed: 11/08/2007	:
Attorney Docket No. 5471-004	:

This is a decision on the petition, filed July 21, 2011 which is being treated as a petition under 37 CFR 1.78(a)(3), seeking to add a claim for priority under 35 U.S.C. §§ 120 and 365(c) to an international application designating the United States of America (Application No. PCT/IT2006/000393 filed on May 25, 2006.

The petition is **DISMISSED**.

A review of the file record fails to disclose that a claim for the benefit of priority to the above-noted, prior-filed international applications was made within the time period set forth in 37 CFR 1.78(a)(2)(ii) and further failed to include a proper reference to the prior-filed application as required by 37 CFR 1.78(a)(2)(i) and 1.78(a)(2)(iii).

The instant application was filed November 8, 2007. Therefore, since this application was filed after November 29, 2000, a petition under 37 CFR 1.78(a)(3), along with submission of a Certificate of Correction, is the appropriate avenue of relief to accept a late claim for the benefit of priority to a prior-filed international application after issuance of the application into a patent. *See* MPEP 1481.

A petition for acceptance of a claim for late priority under 37 CFR 1.78(a)(3) must be accompanied by:

(1) the reference required by 35 U.S.C. § 120 and 37 CFR 1.78(a)(2)(i) of the prior-filed application, unless previously submitted;

(2) the surcharge set forth in § 1.17(t); and

(3) a statement that the entire delay between the date the claim was due under 37 CFR 1.78(a)(2)(ii) and the date the claim was filed was unintentional. The Director may require additional information where there is a question whether the delay was unintentional.

The petition must be dismissed because the reference required by 35 U.S.C. § 120 and 365(c) and 37 CFR 1.78(a)(2)(i) has not be properly supplied. A Certificate of Correction is not a proper reference. Pursuant to 37 CFR 1.78(a)(2)(iii) the reference required by this paragraph must be included in an application data sheet (§ 1.76), or the specification must contain or be amended to contain such reference in the first sentence(s) following the title.

Additionally, the certificate of correction is not acceptable as drafted since it improperly incorporates by reference the prior-filed applications. An incorporation by reference statement added after an application's filing date is not effective because no new matter can be added to an application after its filing date (see 35 U.S.C. § 132(a)). If an incorporation by reference statement is included in an amendment to the specification to add a benefit claim under 35 U.S.C. § 120 and 365(c) after the filing date of the application, the amendment would not be proper. When a benefit claim under 35 U.S.C. § 120 and 365(c) is submitted after the filing of an application, the reference to the prior application cannot include an incorporation by reference statement of the prior application. See Dart Industries v. Banner, 636 F.2d 684, 207 USPQ 273 (C.A.D.C. 1980). Note MPEP §§ 201.06(c) and 608.04(b).

Before the petition under 37 CFR § 1.78(a)(3) can be granted, a renewed petition and either an supplemental Application Data Sheet or an amendment (complying with the provisions of 37 CFR 1.121 and 37 CFR 1.76(b)(5)) and an oath or declaration in compliance with 37 CFR 1.63 to correct the above matters are required. A new certificate of correction is also required.

Receipt of the $1,410.00 surcharge, as well as the $100.00 certificate of correction fee, is acknowledged.

Further correspondence with respect to this matter should be addressed as follows:

By mail: Mail Stop PETITIONS
Commissioner for Patents
Post Office Box 1450
Alexandria, VA 22313-1450

By hand: Customer Service Window
Mail Stop Petitions
Randolph Building
401 Dulany Street
Alexandria, VA 22314

By fax: (571) 273-8300
ATTN: Office of Petitions

A reply may also be filed via EFS-Web.

Any inquiries concerning this decision may be directed to Senior Petitions Attorney Douglas I. Wood at (571) 272-3231.

Boris Milef
PCT Legal Examiner
Office of PCT Legal Administration

UNITED STATES PATENT AND TRADEMARK OFFICE

Commissioner for Patents
United States Patent and Trademark Office
P.O. Box 1450
Alexandria, VA 22313-1450
www.uspto.gov

GOTTLIEB RACKMAN & REISMAN PC
270 MADISON AVE
8TH FLOOR
NEW YORK NY 10016-0601

MAILED
NOV 22 2011
OFFICE OF PETITIONS

In re Patent No. 7,722,761	:
Issue Date: 05/25/2010	: DECISION ON PETITION
Application No. 11/983,331	: UNDER 37 CFR 1.78(a)(3)
Filed: 11/08/2007	:
Attorney Docket No. 5471-004	:

This is a decision on the RENEWED PETITION UNDER 37 C.F.R. § 1.78(a)(3) TO CLAIM BENEFIT UNDER 35 U.S.C. § 365(c) OF A PRIOR COPENDING INTERNATIONAL APPLICATION DESIGNATING THE UNITED STATES OF AMERICA, filed on October 31, 2011, which is treated as a petition to accept an unintentionally delayed claim under 35 U.S.C. §§ 120 and 365(c) for the benefit of priority to the prior-filed international application set forth in the concurrently-filed application data sheet (ADS).

The petition is again **DISMISSED**.

A petition for acceptance of a claim for late priority under 37 CFR 1.78(a)(3) is only applicable to those applications filed on or after November 29, 2000. Further, the petition is appropriate only after the expiration of the period specified in 37 CFR 1.78(a)(2)(ii). In addition, the petition under 37 CFR 1.78(a)(3) must be accompanied by:

(1) the reference required by 35 U.S.C. § 120 and 37 CFR 1.78(a)(2)(i) of the prior-filed application, unless previously submitted;
(2) the surcharge set forth in § 1.17(t); and
(3) a statement that the entire delay between the date the claim was due under 37 CFR 1.78(a)(2)(ii) and the date the claim was filed was unintentional. The Director may require additional information where there is a question whether the delay was unintentional.

The correct filing date has not been specified on the ADS filed with the subject petition for the prior-filed international application, PCT/IT06/000393. The ADS states that the above-

referenced PCT application was filed on May 26, 2006. However, a review of PCT records indicates that this application was filed on May 25, 2006. Accordingly, the requirements of 37 CFR 1.78(a)(3) have not been met inasmuch as the filing date of the prior filed PCT application has not been properly provided.

If reconsideration of this decision is desired, a renewed petition under 37 CFR § 1.78(a)(3) and an Application Data Sheet or an amendment (complying with the provisions of 37 CFR 1.121 and 37 CFR 1.76(b)(5)) and to correct the above matters are required.

Further correspondence with respect to this matter should be addressed as follows:

By mail: Mail Stop PETITIONS
Commissioner for Patents
Post Office Box 1450
Alexandria, VA 22313-1450

By hand: Customer Service Window
Mail Stop Petitions
Randolph Building
401 Dulany Street
Alexandria, VA 22314

By fax: (571) 273-8300
ATTN: Office of Petitions

A reply may also be filed via the EFS-Web filing system of the USPTO.

Any inquiries concerning this decision may be directed to Senior Petitions Attorney Douglas I. Wood at (571) 272-3231.

Boris Milef
PCT Legal Examiner
Office of PCT Legal Administration

UNITED STATES PATENT AND TRADEMARK OFFICE

Commissioner for Patents
United States Patent and Trademark Office
P.O. Box 1450
Alexandria, VA 22313-1450
www.uspto.gov

GOTTLIEB RACKMAN & REISMAN PC
270 MADISON AVENUE
8TH FLOOR
NEW YORK NY 10016-0601

MAILED

MAR 15 2012

OFFICE OF PETITIONS

In re Patent No. 7,722,761	:	
Issued: 05/25/2010	:	
Application No. 11/983,331	:	DECISION ON PETITION
Filed: 11/08/2007	:	UNDER 37 CFR 1.78(a)(3)
Attorney Docket Number: 5471-004	:	

This is a decision on the renewed petition filed on January 20, 2012, under 37 CFR 1.78(a)(3) to accept an unintentionally delayed claim under 35 U.S.C. § 120 for the benefit of priority to a prior-filed international application by way of a certificate of correction.

The instant application was filed November 8, 2007. Therefore, since this application was filed after November 29, 2000, a petition under 37 CFR 1.78(a)(3), along with submission of a Certificate of Correction, is the appropriate avenue of relief to accept a late claim for the benefit of priority to a prior-filed nonprovisional or international application after issuance of the application into a patent. *See* MPEP 1481.

A petition for acceptance of a claim for late priority under 37 CFR 1.78(a)(3) must be accompanied by:

(1) the reference required by 35 U.S.C. § 356(c) and 37 CFR 1.78(a)(2)(i) of the prior-filed application, unless previously submitted;
(2) the surcharge set forth in § 1.17(t); and
(3) a statement that the entire delay between the date the claim was due under 37 CFR 1.78(a)(2)(ii) and the date the claim was filed was unintentional. The Director may require additional information where there is a question whether the delay was unintentional.

As the petition for acceptance of an unintentionally delayed claim for the benefit of priority under 35 U.S.C. § 365(c) to the above-noted, prior-filed international application satisfies the conditions of 37 CFR 1.78(a)(3), the petition is granted.

The granting of the petition to accept the delayed benefit claim to the prior-filed application under 37 CFR 1.78(a)(3) should not be construed as meaning that this application is entitled

to the benefit of the prior-filed application. In order for this application to be entitled to the benefit of the prior-filed application, all other requirements under 35 U.S.C. § 365(c) and 37 CFR 1.78(a)(1) and (a)(2) must be met.

The application is referred to the Certificates of Correction branch for issuance of a certificate of correction correcting the claims of priority.

Any questions concerning this matter may be directed to the undersigned at (571) 272-3231.

D Wood

Douglas I. Wood
Senior Petitions Attorney
Office of Petitions

UNITED STATES PATENT AND TRADEMARK OFFICE

Commissioner for Patents
United States Patent and Trademark Office
P.O. Box 1450
Alexandria, VA 22313-1450
www.uspto.gov

MORRISON & FOERSTER LLP
755 PAGE MILL RD
PALO ALTO, CA 94304-1018

MAILED
FEB 18 2011
OFFICE OF PETITIONS

In re Application of Panos et al. Application No. 11/983,344 Filed: November 7, 2007 Attorney Docket No. 3485-P10389US	: : : : :	DECISION ON PETITION TO WITHDRAW FROM RECORD

This is a decision on the Request to Withdraw as attorney or agent of record under 37 C.F.R. § 1.36(b), filed January 14, 2011.

The request is **NOT APPROVED** because it is moot.

A review of the file record indicates that on February 10, 2011 the power of attorney to Morrison & Foerster LLP was revoked by the assignee of the patent application. Accordingly, the request to withdraw under 37 C.F.R. § 1.36(b) is moot.

All future communications from the Office will be directed to the below-listed address until otherwise notified by applicant.

Telephone inquires concerning this decision should be directed to the undersigned at 571-272- 7751. All other inquires concerning either the examination or status of the application should be directed to the Technology Center.

Joan Olszewski
Petitions Examiner
Office of Petitions

cc: TRASKBRITT, P.C.
P.O. BOX 2550
SALT LAKE CITY UT 84110

UNITED STATES PATENT AND TRADEMARK OFFICE

Commissioner for Patents
United States Patent and Trademark Office
P.O. Box 1450
Alexandria, VA 22313-1450
www.uspto.gov

GILBERTO AGUILERA
4690 CALLE DE VIDA
SAN DIEGO CA 92124

MAILED
DEC 20 2010
OFFICE OF PETITIONS

In re Application of	:	
Gilberto AGUILERA	:	
Application No. 11/983,360	:	DECISION ON PETITION
Filed: December 31, 2007	:	
Attorney Docket No.	:	

This is a decision on the petition under the unavoidable provisions of 37 CFR 1.137(a), filed May 19, 2010, to revive the above-identified application.

The petition is **DISMISSED.**

Any further petition to revive must be submitted within TWO (2) MONTHS from the mail date of this decision. Extensions of time under 37 CFR 1.136(a) are permitted. The reconsideration request should include a cover letter entitled "Renewed Petition under 37 CFR 1.137(a)." This is **not** a final agency action within the meaning of 5 U.S.C.§ 704.

The application became abandoned for failure to reply in a timely manner to the Notice of Non-Compliant mailed, July 24, 2009, which set a shortened statutory period for reply of one (1) month. No extensions of time under the provisions of 37 CFR 1.136(a) were obtained. Accordingly, the application became abandoned on August 25, 2009.

A grantable petition under 37 CFR 1.137(a) must be accompanied by: (1) the required reply, unless previously filed; (2) the petition fee as set forth in 37 CFR 1.17(l); (3) a showing to the satisfaction of the Director that the entire delay in filing the required reply from the due date for the reply until the filing of a grantable petition pursuant to 37 CFR 1.137(a) was unavoidable; and (4) any terminal disclaimer (and fee as set forth in 37 CFR 1.20(d)) required pursuant to 37 CFR 1.137(d). The instant petition lacks item (3).

If petitioner cannot provide the evidence necessary to establish unavoidable delay, or simply does not wish to, petitioner may wish to consider filing a petition stating that the delay was unintentional. Public Law 97-247, § 3, 96 Stat. 317 (1982), which revised patent and trademark fees, amended 35 U.S.C. § 41(a)(7) to provide for the revival of an "unintentionally" abandoned application without a showing that the delay in prosecution or in late payment of the issue fee was "unavoidable." This amendment to 35 U.S.C. § 41(a)(7) has been implemented in 37 CFR 1.137(b).

The filing of a petition under 37 CFR 1.137(b) cannot be intentionally delayed and therefore must be filed promptly. A person seeking revival due to unintentional delay cannot make a statement that the delay was unintentional unless the entire delay, including the date it was discovered that the application was abandoned until the filing of the petition to revive under 37 CFR 1.137(b), was unintentional. A statement that the delay was unintentional is not appropriate if petitioner intentionally delayed the filing of a petition for revival under 37 CFR 1.137(b).

Petitioner is strongly encouraged to consider filing a petition under 37 CFR 1.137(b) to revive an unintentionally abandoned application instead of filing a petition under 37 CFR 1.137(a).

A grantable petition pursuant to 37 CFR 1.137(b) must be accompanied by:

> (1)The reply required to the outstanding Office action or notice, unless previously filed. In nonprovisional utility application abandoned for failure to respond to a non-final Office action, the required reply may be met by filing either (A) an argument or amendment under 37 CFR 1.111 or (B) a continuing application under 37 CFR 1.53(b).
>
> (2) The petition fee as set forth in 37 CFR 1.17(m), **$810.00 for a small entity**;
>
> (3) A statement that the entire delay in filing the required reply from the due date for the reply until the filing of a grantable petition was unintentional. The Director may require additional information where there is a question whether the delay was unintentional.

A form for filing a petition to revive an unintentionally abandoned application accompanies this decision for petitioner's convenience. If petitioner desires to file a petition under 37 CFR 1.137(b) instead of filing a request for reconsideration, petitioner must complete the enclosed petition form (PTO/SB/64) and pay the $810.00 petition fee.

Petitioner may wish to consider hiring a registered patent attorney or agent to assist in the prosecution of this application. Additionally, petitioner is encouraged to contact the Inventors Assistance Center (IAC) by telephone at 800-786-9199 or 571-272-1000, Monday through Friday from 8:30 AM to 5:30 PM (EST). The IAC provides patent information and services to the public and is staffed by former Supervisory Patent Examiners and experienced Primary Examiners who answer general questions concerning patent examining policy and procedure.

Further correspondence with respect to this matter should be addressed as follows:

By Mail: Mail Stop PETITION
Commissioner for Patents
P. O. Box 1450
Alexandria, VA 22313-1450

By hand: U. S. Patent and Trademark Office
Customer Service Window, Mail Stop Petitions
Randolph Building
401 Dulany Street
Alexandria, VA 22314

By facsimile: **(571) 273-8300**
Attn: Office of Petitions

Telephone inquiries concerning this decision should be directed to Michelle R. Eason at (571) 272-4231.

/Thurman K. Page/
Petition Examiner
Office of Petitions

UNITED STATES PATENT AND TRADEMARK OFFICE

Commissioner for Patents
United States Patent and Trademark Office
P.O. Box 1450
Alexandria, VA 22313-1450
www.uspto.gov

GILBERTO AQUILERA
4690 CALLE DE VIDA
SAN DIEGO CA 92124

MAILED
DEC 03 2010
OFFICE OF PETITIONS

In re Application of	:	
Gilberto Aguilera	:	
Application No. 11/983,361	:	DECISION ON REQUEST FOR REFUND
Filed: November 8, 2007	:	
For: EASY POKY	:	

This is a decision on the communication filed October 20, 2010, which is being treated as a Request For Refund.

The request is **GRANTED**-inpart.

Applicant request a refund of the petition fee ($400.00) paid on December 31, 2007 and the surcharge ($65) and excess claim fee ($105) paid on September 15, 2008.

However, applicant is only entitled to a refund of the petition fee ($400.00) since no decision was ever rendered on the petition/request filed December 31, 2007. The surcharge ($65.00) and excess claim fee ($105) are not refundable as the fees were required by the Notice to File Missing Parts mailed September 4, 2008.

In view of the above, a total of $400.00 is being refunded by check.

Any questions concerning this matter may be directed to the undersigned at (571) 272-3208.

/KOC/
Karen Creasy
Petitions Examiner
Office of Petitions

UNITED STATES PATENT AND TRADEMARK OFFICE

Commissioner for Patents
United States Patent and Trademark Office
P.O. Box 1450
Alexandria, VA 22313-1450
www.uspto.gov

MAILED

SEP 12 2011

OFFICE OF PETITIONS

GILBERTO AQUILERA
4690 CALLE DE VIDA
SAN DIEGO, CA 92124

In re Application of
Gilberto Aguilera
Application No. 11/983,361
Filed: December 31, 2007
For: EASY POKY

ON PETITION

This is a decision in response to communication, filed August 29, 2011, which is being treated as a petition under 37 CFR 1.181 to withdraw the holding of abandonment of the above-identified application.

The petition is **GRANTED**.

This application was held abandoned for failure to timely respond to the Office action of October 6, 2010, which set a three (3) month shortened statutory period for reply. Accordingly, a reply was due on or before January 6, 2011, with the maximum statutory period for response ending on April 6, 2011. A Notice of Abandonment was mailed on August 15, 2011.

Petitioner requests, in effect, that the abandonment be withdrawn, since a timely reply was filed on October 20, 2010. In support, petitioner submits a copy of the previously mailed correspondence, including a copy of his return postcard which acknowledges receipt by the U.S. Patent and Trademark Office (USPTO) on October 20, 2010 of: USPTO Confirmation No. 4461 Office Action Summary Mail Date 10/06/2010, Inventor's application revision dated 2/14/1009 deleted entirely and Inventor's application revised 10/18/2010.

In fact, a review of the written record confirms that a proposed reply was filed on October 20, 2010, as it is present in the application file. Accordingly, the holding of abandonment for failure to timely file a response to the Office action of October 6, 2010 is withdrawn and the application is restored to pending status.

The Notice of Abandonment mailed August 15, 2010 is hereby vacated.

This application is being referred to Technology Center AU 3718 for appropriate action by the Examiner in the normal course of business on the reply received October 20, 2010.

Telephone inquiries concerning this decision should be directed to the undersigned at (571) 272-3204. Inquiries relating to further prosecution should be directed to the Technology Center.

/SDB/

Sherry D. Brinkley
Petitions Examiner
Office of Petitions

UNITED STATES PATENT AND TRADEMARK OFFICE

Commissioner for Patents
United States Patent and Trademark Office
P.O. Box 1450
Alexandria, VA 22313-1450
www.uspto.gov

INTEGRAL DOCKET
304 INDIAN TRACE, #750
WESTON, FL 33326

MAILED
OCT 14 2011
OFFICE OF PETITIONS

In re Application of
Thomas Aisenbrey
Application No. 11/983,363
Filed: November 8, 2007
Attorney Docket No. 2200-0058

DECISION ON PETITION
TO WITHDRAW
FROM RECORD

This is a decision on the Request to Withdraw as attorney or agent of record under 37 C.F.R. § 1.36(b), filed September 29, 2011.

The request is **NOT APPROVED**.

A grantable request to withdraw as attorney/agent of record must be signed by every attorney/agent seeking to withdraw or contain a clear indication that one attorney is signing on behalf of another/others.

The Office strongly encourages practitioner(s) requesting withdrawal from representation as practitioner of record in an application to review the record to determine whether he or she is, in fact, of record and how he or she was made of record. The practitioner(s) should determine whether he or she was appointed by naming each practitioner individually or through the use of a Customer Number. If the practitioner(s) were appointed by a specific designation, then the request should ask that each specified practitioner be withdrawn and should list each practitioner(s) in the Request. Similarly, if practitioner(s) was appointed by a Customer Number, the practitioner(s) should ensure that the correct number is provided in the Request Additionally, as set forth in MPEP 403(I), the addition or deletion of a practitioner from the list of persons associated with a Customer Number should be done by way of a Request for Customer umber Data Change (PTO/SB/124) and not a Request for Withdrawal As Attorney or Agent and Change of Correspondence Address (PTO/SB/83).

The request cannot be approved because practitioners were not appointed by customer number. Practitioners must withdraw in the same manner by which they were appointed.

Petitioner should also note that the Office will no longer accept address changes to a new practitioner of law firm filed with a Request, absent the filing of a power of attorney to the new

representative. The Office will either change the correspondence address of record to the most current address information provided for the assignee of the entire interest who properly became of record under 37 CFR 3.71 or, the most current address information provided for the first named inventor.

Accordingly, the request to withdraw from record does not include an acceptable current correspondence address for future communications from the Office.

All future communications from the Office will continue to be directed to the above-listed address until otherwise notified by applicant.

Telephone inquiries concerning this decision should be directed to undersigned at 571-272-1642. All other inquiries concerning the examination or status of this application should be directed to the Technology Center.

/AMW/
April M. Wise
Petitions Examiner
Office of Petitions

cc: REED SMITH LLP
2500 ONE LIBERTY PLACE
1650 MARKET STREET
PHILADELPHIA, PA 19103

UNITED STATES PATENT AND TRADEMARK OFFICE

Commissioner for Patents
United States Patent and Trademark Office
P.O. Box 1450
Alexandria, VA 22313-1450
www.uspto.gov

PROGENICS PHARMACEUTICALS, INC.
c/o WOLF, GREENFIELD & SACKS, P.C.
600 ATLANTIC AVENUE
BOSTON MA 02210-2206

MAILED
JAN 05 2012
OFFICE OF PETITIONS

In re Application of	:	
MADDON et al.	:	
Application No. 11/983,372	:	DECISION ON APPLICATION
Filed: 11/07/2007	:	FOR
Docket No. P0741.70005US01	:	PATENT TERM ADJUSTMENT

This is a decision on the "APPLICATION FOR PATENT TERM ADJUSTMENT UNDER 37 C.F.R. §1.705(B)" filed December 16, 2011. Applicants request that the initial determination of patent term adjustment under 35 U.S.C. 154(b) be corrected to zero (0) days (200 days of A delay - 352 days of applicant delay).

The application for patent term adjustment is **GRANTED**.

The Office has updated the PALM and PAIR screens to reflect that the corrected Patent Term Adjustment (PTA) determination at the time of the mailing of the Notice of Allowance is zero (0) days (200 days of A delay - 352 days of applicant delay). A copy of the updated PAIR screen, showing the corrected determination, is enclosed.

A review of the application history confirms that applicants' characterization of the basis for and amounts of the adjustments and reductions of patent term in this application at the time of the mailing of the Notice of Allowance are correct.

In view thereof, the corrected determination of patent term adjustment at the time of the mailing of the Notice of Allowance is zero (0) days (200 days of A delay - 352 days of applicant delay).

The Office acknowledges the payment of the $200.00 fee set forth in 37 CFR 1.18(e). No additional fees are required.

Applicants are reminded that any delays by the Office pursuant to 37 CFR 1.702(a)(4) and 1.702(b) and any applicant delays under 37 CFR 1.704(c)(10) will be calculated at the time of the issuance of the patent and applicants will be notified in the Issue Notification letter that is mailed to applicants approximately three weeks prior to issuance.

The Office of Data Management has been advised of this decision. This matter is being referred to the Office of Data Management for issuance of the patent.

Telephone inquiries specific to this matter should be directed to the undersigned at (571) 272-3211.

Christina Tartera Donnell

Christina Tartera Donnell
Senior Petitions Attorney
Office of Petitions

Enclosure: Copy of REVISED PAIR Screen

Patent Term Adjustments

Patent Term Adjustment (PTA) for Application Number: 11/983,372

Filing or 371(c) Date:	11-07-2007	Overlapping Days Between {A and B} or {A and C}:	0
Issue Date of Patent:	-	Non-Overlapping USPTO Delays:	125
A Delays:	125	PTO Manual Adjustments:	75
B Delays:	0	Applicant Delays:	352
C Delays:	0	Total PTA Adjustments:	0

Patent Term Adjustment History **Explanation Of Calculations**

Number	Date	Contents Description	PTO (Days)	APPL (Days)	Start
115	01-04-2012	Adjustment of PTA Calculation by PTO	75		0
105	09-16-2011	Mail Corrected Notice of Allowance			0
104	09-13-2011	Corrected Notice of Allowance			0
103	08-02-2011	Mail Notice of Allowance			0
101	09-02-2011	Miscellaneous Incoming Letter			0
100	07-26-2011	Reference capture on IDS			0
98	08-02-2011	Email Notification			0
97	08-02-2011	Mail Examiner's Amendment			0
96	08-02-2011	Mail Reasons for Allowance			0
95	07-27-2011	Office Action Review			0
94	07-27-2011	Office Action Review			0
93	07-27-2011	Office Action Review			0
92	07-27-2011	Office Action Review			0
91	07-29-2011	Issue Revision Completed			0
90	07-29-2011	Document Verification			0
89	07-29-2011	Notice of Allowance Data Verification Completed			0
88	07-29-2011	Case Docketed to Examiner in GAU			0
87	07-28-2011	Reasons for Allowance			0

86	07-28-2011	Examiner's Amendment Communication	0
85	07-27-2011	Examiner Interview Summary Record (PTOL - 413)	0
84	07-28-2011	Allowability Notice	0
83	07-26-2011	Information Disclosure Statement considered	0
82	07-26-2011	Information Disclosure Statement (IDS) Filed	0
81	06-23-2011	Electronic Review	0
80	06-23-2011	Email Notification	0
79	06-23-2011	Mail Non-Final Rejection	0
78	06-20-2011	Office Action Review	0
77	06-19-2011	Non-Final Rejection	0
75	03-14-2011	Miscellaneous Incoming Letter	0
74	03-15-2011	Date Forwarded to Examiner	0
73	03-14-2011	Amendment Submitted/Entered with Filing of CPA/RCE	0
72	03-14-2011	Request for Continued Examination (RCE)	0
71	03-15-2011	Disposal for a RCE / CPA / R129	0
70	03-15-2011	Email Notification	0
69	03-14-2011	Workflow - Request for RCE - Begin	0
68	03-15-2011	Mail Examiner Interview Summary (PTOL - 413)	0
67	03-09-2011	Office Action Review	0
66	03-09-2011	Examiner Interview Summary Record (PTOL - 413)	0
65	02-08-2011	Electronic Review	0
64	02-08-2011	Email Notification	0
63	02-08-2011	Mail Final Rejection (PTOL - 326)	0
62	01-31-2011	Final Rejection	0
61	01-11-2011	Information Disclosure Statement considered	0

60	01-11-2011	Information Disclosure Statement (IDS) Filed		0
59	12-21-2010	Information Disclosure Statement considered		0
57	12-21-2010	Reference capture on IDS		0
56	12-21-2010	Information Disclosure Statement (IDS) Filed		0
55	01-11-2011	Reference capture on IDS		0
54	01-11-2011	Information Disclosure Statement (IDS) Filed	46	50
53	12-21-2010	Information Disclosure Statement (IDS) Filed		0
51	11-30-2010	Date Forwarded to Examiner		0
50	11-26-2010	Response after Non-Final Action	92	40
49	11-26-2010	Request for Extension of Time - Granted		0
48	11-15-2010	Email Notification		0
47	11-15-2010	Mail Examiner Interview Summary (PTOL - 413)		0
46	11-08-2010	Examiner Interview Summary Record (PTOL - 413)		0
45	09-01-2010	Miscellaneous Incoming Letter		0
40	05-26-2010	Mail Non-Final Rejection		0
39	05-24-2010	Non-Final Rejection		0
36	03-13-2010	Date Forwarded to Examiner		0
35	02-22-2010	Response after Non-Final Action		0
34	03-03-2010	CRF Is Good Technically / Entered into Database		0
33	01-22-2010	Mail Miscellaneous Communication to Applicant		0
32	01-19-2010	Miscellaneous Action with SSP		0
28	11-12-2009	Preliminary Amendment		0
27	11-14-2009	Date Forwarded to Examiner		0
26	11-12-2009	Response to Election / Restriction Filed	92	24
25	11-12-	Request for Extension of Time - Granted		0

	2009				
24	05-12-2009	Mail Restriction Requirement	125		0.5
23	05-11-2009	Restriction/Election Requirement			0
22	11-20-2008	PG-Pub Issue Notification			0
21	11-06-2008	Case Docketed to Examiner in GAU			0
20	10-22-2008	IFW TSS Processing by Tech Center Complete			0
19	07-28-2008	Preliminary Amendment			0
18	08-22-2008	Application Dispatched from OIPE			0
17	08-11-2008	Sent to Classification Contractor			0
16	08-11-2008	Filing Receipt - Updated			0
15	08-11-2008	Application Is Now Complete			0
14	11-07-2007	Payment of additional filing fee/Preexam			0
13	11-07-2007	A statement by one or more inventors satisfying the requirement under 35 USC 115, Oath of the Applic			0
12	07-28-2008	Applicant has submitted new drawings to correct Corrected Papers problems		122	7
11	11-07-2007	Claim Preliminary Amendment			0
10	08-07-2008	Correspondence Address Change			0
9	01-29-2008	Cleared by L&R (LARS)			0
8	12-28-2007	Filing Receipt			0
7	12-28-2007	Notice Mailed--Application Incomplete--Filing Date Assigned			0
6	12-14-2007	CRF Is Good Technically / Entered into Database			0
5	12-03-2007	Referred to Level 2 (LARS) by OIPE CSR			0
4	12-03-2007	CASE CLASSIFIED BY OIPE			0
3	11-16-2007	IFW Scan & PACR Auto Security Review			0
2	11-07-2007	CRF Disk Has Been Received by Preexam / Group / PCT			0
1	11-09-2007	Initial Exam Team nn			0

0.5	11-07-2007	Filing date	0

Close Window

UNITED STATES PATENT AND TRADEMARK OFFICE

Commissioner for Patents
United States Patent and Trademark Office
P.O. Box 1450
Alexandria, VA 22313-1450
www.uspto.gov

AMS RESEARCH CORPORATION
10700 BREN ROAD WEST
MINNETONKA MN 55343

MAILED

JUN 10 2011

OFFICE OF PETITIONS

In re Application of	:	
Thierfelder, et al.	:	
Application No. 11/983,412	:	ON PETITION
Filed: November 7, 2007	:	
Attorney Docket No. AMS-153B-US	:	

This is in response to the petition to revive an unintentionally abandoned application under 37 CFR 1.137(b), filed May 19, 2011.

The petition under 37 CFR 1.137(b) is **GRANTED**.

The above-identified application became abandoned for failure to timely file a proper response to the final Office action mailed August 19, 2010, which set a shortened statutory period for reply of three (3) months. Applicants filed an Amendment on November 19, 2010. However, by Advisory Action mailed January 19, 2011, the Examiner informed Applicants that the Amendment would not be entered because the Terminal Disclaimer submitted with the Amendment was disapproved as it did not include a Rule 3.73(b) statement. As such, the application became abandoned by operation of law on November 20, 2010. The Office mailed a Notice of Abandonment on March 10, 2011.

With the instant petition, petitioner has paid the petition fee, made the proper statement of unintentional delay, and submitted the required reply in the form of a Terminal Disclaimer and Rule 3.73(b) Statement.

The application is being forwarded to Group Art Unit 3735 for consideration of the Terminal Disclaimer and Rule 3.73(b) Statement, filed May 19, 2011.

Telephone inquiries concerning this decision may be directed to the undersigned at 571-272-3207.

Cliff Congo
Petitions Attorney
Office of Petitions

UNITED STATES PATENT AND TRADEMARK OFFICE

Commissioner for Patents
United States Patent and Trademark Office
P.O. Box 1450
Alexandria, VA 22313-1450
www.uspto.gov

July 8, 2011

SEED INTELLECTUAL PROPERTY LAW GROUP PLLC
701 FIFTH AVE
SUITE 5400
SEATTLE WA 98104

In re Application of	:	
Michael Ian Phillips et al.	:	**DECISION ON PETITION**
Application No. 11983431	:	
Filed: 11/07/2007	:	***ACCEPTANCE OF COLOR***
Attorney Docket No. **530045.420**	:	***DRAWINGS***

This is a decision on the Petition to Accept Color Drawings under 37 C.F.R 1.84 (a) (2), received in the United States Patent and Trademark Office (USPTO) June 16, 2008.

The petition is **GRANTED**.

A grantable petition under 37 C.F.R. 1.84(a) (2) must be accompanied by the following.

1. The fee set forth under 37 C.F.R. 1.17(h),
2. Three (3) sets of the color drawings in question, or (1) set if filed via EFS, and
3. The specification contains appropriate language referring to the color drawings as the first paragraph in that portion of the specification relating to the brief description of the drawings.

The petition was accompanied by all of the required fees and drawings. The specification contains the appropriate language. Therefore, the petition is GRANTED.

Telephone inquires relating to this decision may be directed to the undersigned in the Office of Data Management at 571-272-4200.

/Laura Feldman/
Quality Control Specialist
Office of Data Management
Publications Branch

UNITED STATES PATENT AND TRADEMARK OFFICE

Commissioner for Patents
United States Patent and Trademark Office
P.O. Box 1450
Alexandria, VA 22313-1450
www.uspto.gov

Caroline Nash
Nash & Titus, LLC
21402 Unison Road
Middleburg VA 20117

MAILED
APR 06 2011
OFFICE OF PETITIONS

In re Application of	:	
Garfield Royer	:	
Application No. 11/983,454	:	DECISION ON PETITION
Filed: November 9, 2007	:	TO MAKE SPECIAL UNDER
Attorney Docket No. Royer 101	:	37 CFR 1.102(c)(1)
	:	

This is a decision on the petition under 37 CFR 1.102(c)(1), filed January 11, 2011, to make the above-identified application special based on applicant's age as set forth in M.P.E.P. § 708.02, Section IV.

The petition is **GRANTED**.

A grantable petition to make an application special under 37 CFR 1.102(c)(1) and MPEP § 708.02, Section IV: Applicant's Age must be accompanied by evidence showing that at least one of the applicants is 65 years of age, or more, such as a birth certificate or a statement by applicant. No fee is required

The instant petition includes a statement by an attorney on behalf inventor Garfield Royer and a copy of applicant's driver's license attesting to his/her age. The above-identified application has been accorded "special" status.

Telephone inquiries concerning this decision should be directed to Kimberly Inabinet at 571-272-4618.

All other inquiries concerning either the examination or status of the application should be directed to the Technology Center.

The application is being forwarded to the Technology Center Art Unit 1651 for action on the merits commensurate with this decision.

/Kimberly Inabinet/

Kimberly Inabinet
Petitions Examiner
Office of Petitions

UNITED STATES PATENT AND TRADEMARK OFFICE

Commissioner for Patents
United States Patent and Trademark Office
P.O. Box 1450
Alexandria, VA 22313-1450
www.uspto.gov

MCNAIR LAW FIRM, P.A.
P.O. BOX 447
GREENVILLE, SC 29602-0447

MAILED

NOV 21 2011

OFFICE OF PETITIONS

In re Application of	:	
GARCIA	:	
Application No. 11/983,475	:	DECISION ON PETITION
Filed: November 9, 2007	:	TO WITHDRAW
Attorney Docket No. 044621.00003	:	FROM RECORD
	:	

This is a decision on the Request to Withdraw as attorney or agent under 37 C.F.R. § 1.36(b) filed October 26, 2011.

The request is **NOT APPROVED**.

A review of the file record indicates that Douglas W. Kim does not have power of attorney in this patent application. See 37 C.F.R. § 10.40. Accordingly, the request to withdraw under 37 C.F.R. § 1.36(b) is not applicable.

The Office will no longer approve requests from practitioners to withdraw from applications where the requesting practitioner is acting, or has acted, in a representative capacity pursuant to 37 CFR 1.34. In these situations, the practitioner is responsible for the correspondence the practitioner files in the application while acting in a representative capacity. As such, there is no need for the practitioner to obtain the Office's permission to withdraw from representation. However, practitioners acting in a representative capacity, like practitioners who have a power of attorney in the application, remain responsible for noncompliance with 37 CFR 1.56, as well as 37 CFR 10.18, with respect to documents they file.

All future communications from the Office will continue to be directed to the above-identified address until otherwise properly notified.

Telephone inquires concerning this decision should be directed to the undersigned at (571) 272-6735.

/Diane Goodwyn/
Diane Goodwyn
Petitions Examiner
Office of Petitions

cc: JOSE GARCIA
523 MAIN STREET
WILLIAMSTON SC 29697

UNITED STATES PATENT AND TRADEMARK OFFICE

UNITED STATES DEPARTMENT OF COMMERCE
United States Patent and Trademark Office
Address: COMMISSIONER FOR PATENTS
P.O. Box 1450
Alexandria, Virginia 22313-1450
www.uspto.gov

APPLICATION NO.	FILING DATE	FIRST NAMED INVENTOR	ATTORNEY DOCKET NO.	CONFIRMATION NO.
11/983,714	11/12/2007	Yoichiro Sako	S1459.70395US00	5492

7590 07/07/2011
WOLF GREENFIELD & SACKS, P.C.
600 ATLANTIC AVENUE
BOSTON, MA 02210-2206

EXAMINER
HAIEM, SEAN

ART UNIT	PAPER NUMBER
2422	

MAIL DATE	DELIVERY MODE
07/07/2011	PAPER

DECISION GRANTING PETITION UNDER 37 CFR 1.138(d)

The declaration of express abandonment is recognized

This is in response to the petition under 37 CFR 1.138(d), requesting for a refund of any previously paid search fee and excess claims fee in the above-identified application.

The petition is granted.

The express abandonment is recognized. Any previously paid search fee and excess claims fee are hereby refunded.

Telephone inquiries should be directed to the Office of Data Management at (571) 272-4200.

Patent Publication Branch
Office of Data Management

FORM PET651G (Rev. 08/07)

UNITED STATES PATENT AND TRADEMARK OFFICE

UNITED STATES DEPARTMENT OF COMMERCE
United States Patent and Trademark Office
Address: COMMISSIONER FOR PATENTS
P.O. Box 1450
Alexandria, Virginia 22313-1450
www.uspto.gov

APPLICATION NO.	FILING DATE	FIRST NAMED INVENTOR	ATTORNEY DOCKET NO.	CONFIRMATION NO.
11/983,762	11/09/2007	Duane P. Wolf	INBRED CORN LINE G07-NPDI	5037

7590 12/28/2010

Dana S. Rewoldt, Esq.
Syngenta Seeds, Inc.
2369 330th St
Box 500
Slater, IA 50244

EXAMINER
FOX, DAVID T

ART UNIT	PAPER NUMBER
1638	

MAIL DATE	DELIVERY MODE
12/28/2010	PAPER

Please find below and/or attached an Office communication concerning this application or proceeding.

The time period for reply, if any, is set in the attached communication.

UNITED STATES PATENT AND TRADEMARK OFFICE

Commissioner for Patents
United States Patent and Trademark Office
P.O. Box 1450
Alexandria, VA 22313-1450
www.uspto.gov

DEC 2 8 2010

Dana S. Rewoldt, Esq.
Syngenta Seeds
2369 330th St.
Box 500
Slater IA 50244

In re Application of:
Duane P. Wolf
Serial No.: 11/983,762
Filed: November 9, 2007
Attorney Docket No.: **INBRED CORN LINE G07-NPDI**

: PETITION DECISION

This is in response to the petition under 37 CFR § 1.59(b), filed December 20, 2010, to expunge information from the above identified application. This application has been allowed.

Petitioner requests that the Reply to Request for Information under 37 CFR 1.105, and attachment thereto, submitted to the Patent Office on June 23, 2009, be expunged from the record. Petitioner states either: (A) that the information contains trade secret material, proprietary material and/or material that is subject to a protective order which has not been made public; or (B) that the information submitted was unintentionally submitted and the failure to obtain its return would cause irreparable harm to the party who submitted the information or to the party in interest on whose behalf the information was submitted, and the information has not otherwise been made public. The petition fee set forth in 37 CFR § 1.17(g) has been paid.

The reasons set forth in this petition establishes to the satisfaction of the Director that expungement of the information is appropriate. The file entry for this document has been closed and as such the document is no longer publicly available, which is the IFW equivalent to removal of a paper document from a paper file wrapper.

Therefore, petitioner's petition is GRANTED.

Should there be any questions about this decision please contact Marianne C. Seidel by letter addressed to Director, TC 1600, at the address listed above, or by telephone at 571-272-0584 or by facsimile sent to the general Office facsimile number, 571-273-8300.

/MC Seidel/
Marianne C. Seidel, Quality Assurance Specialist
Technology Center 1600

UNITED STATES PATENT AND TRADEMARK OFFICE

UNITED STATES DEPARTMENT OF COMMERCE
United States Patent and Trademark Office
Address: COMMISSIONER FOR PATENTS
P.O. Box 1450
Alexandria, Virginia 22313-1450
www.uspto.gov

APPLICATION NO.	FILING DATE	FIRST NAMED INVENTOR	ATTORNEY DOCKET NO.	CONFIRMATION NO.
11/983,764	11/09/2007	Duane P. Wolf	G07-NPDI4214	5055

7590 12/28/2010

Dana S. Rewoldt, Esq.
Syngenta Seeds, Inc.
2369 330th St
Box 500
Slater, IA 50244

EXAMINER
FOX, DAVID T

ART UNIT	PAPER NUMBER
1638	

MAIL DATE	DELIVERY MODE
12/28/2010	PAPER

Please find below and/or attached an Office communication concerning this application or proceeding.

The time period for reply, if any, is set in the attached communication.

UNITED STATES PATENT AND TRADEMARK OFFICE

Commissioner for Patents
United States Patent and Trademark Office
P.O. Box 1450
Alexandria, VA 22313-1450
www.uspto.gov

DEC 2 8 2010

Dana S. Rewoldt, Esq.
Syngenta Seeds
2369 330th St.
Box 500
Slater IA 50244

In re Application of:
Duane P. Wolf
Serial No.: 11/983,764
Filed: November 9, 2007
Attorney Docket No.: **G07-NPDI4214**

: PETITION DECISION

This is in response to the petition under 37 CFR § 1.59(b), filed December 20, 2010, to expunge information from the above identified application. This application has been allowed.

Petitioner requests that the Reply to Request for Information under 37 CFR 1.105, and attachment thereto, submitted to the Patent Office on June 29, 2009 and July 20, 2009, be expunged from the record. Petitioner states either: (A) that the information contains trade secret material, proprietary material and/or material that is subject to a protective order which has not been made public; or (B) that the information submitted was unintentionally submitted and the failure to obtain its return would cause irreparable harm to the party who submitted the information or to the party in interest on whose behalf the information was submitted, and the information has not otherwise been made public. The petition fee set forth in 37 CFR § 1.17(g) has been paid.

The reasons set forth in this petition establishes to the satisfaction of the Director that expungement of the information is appropriate. The file entry for this document has been closed and as such the document is no longer publicly available, which is the IFW equivalent to removal of a paper document from a paper file wrapper.

Therefore, petitioner's petition is GRANTED.

Should there be any questions about this decision please contact Marianne C. Seidel by letter addressed to Director, TC 1600, at the address listed above, or by telephone at 571-272-0584 or by facsimile sent to the general Office facsimile number, 571-273-8300.

/MC Seidel/
Marianne C. Seidel, Quality Assurance Specialist
Technology Center 1600

UNITED STATES PATENT AND TRADEMARK OFFICE

UNITED STATES DEPARTMENT OF COMMERCE
United States Patent and Trademark Office
Address: COMMISSIONER FOR PATENTS
P.O. Box 1450
Alexandria, Virginia 22313-1450
www.uspto.gov

APPLICATION NO.	FILING DATE	FIRST NAMED INVENTOR	ATTORNEY DOCKET NO.	CONFIRMATION NO.
11/983,766	11/09/2007	Christopher Clucas	INBRED CORN LINE G07-NPID	5053

7590 12/29/2010

Dana S. Rewoldt, Esq.
Syngenta Seeds, Inc.
2369 330th St
Box 500
Slater, IA 50244

EXAMINER
FOX, DAVID T

ART UNIT	PAPER NUMBER
1638	

MAIL DATE	DELIVERY MODE
12/29/2010	PAPER

Please find below and/or attached an Office communication concerning this application or proceeding.

The time period for reply, if any, is set in the attached communication.

UNITED STATES PATENT AND TRADEMARK OFFICE

Commissioner for Patents
United States Patent and Trademark Office
P.O. Box 1450
Alexandria, VA 22313-1450
www.uspto.gov

DEC 2 9 2010

Dana S. Rewoldt, Esq.
Syngenta Seeds
2369 330th St.
Box 500
Slater IA 50244

In re Application of:
Christopher Clucas
Serial No.: 11/983,766
Filed: November 9, 2007
Attorney Docket No.: **INBRED CORN LINE G07-NPID**

: PETITION DECISION

This is in response to the petition under 37 CFR § 1.59(b), filed December 20, 2010, to expunge information from the above identified application. This application has been allowed.

Petitioner requests that the Reply to Request for Information under 37 CFR 1.105, and attachment thereto, submitted to the Patent Office on June 23, 2009 be expunged from the record. Petitioner states either: (A) that the information contains trade secret material, proprietary material and/or material that is subject to a protective order which has not been made public; or (B) that the information submitted was unintentionally submitted and the failure to obtain its return would cause irreparable harm to the party who submitted the information or to the party in interest on whose behalf the information was submitted, and the information has not otherwise been made public. The petition fee set forth in 37 CFR § 1.17(g) has been paid.

The reasons set forth in this petition establishes to the satisfaction of the Director that expungement of the information is appropriate. The file entry for this document has been closed and as such the document is no longer publicly available, which is the IFW equivalent to removal of a paper document from a paper file wrapper.

Therefore, petitioner's petition is GRANTED.

Should there be any questions about this decision please contact Marianne C. Seidel by letter addressed to Director, TC 1600, at the address listed above, or by telephone at 571-272-0584 or by facsimile sent to the general Office facsimile number, 571-273-8300.

/MC Seidel/
Marianne C. Seidel, Quality Assurance Specialist
Technology Center 1600

UNITED STATES PATENT AND TRADEMARK OFFICE

Commissioner for Patents
United States Patent and Trademark Office
P.O. Box 1450
Alexandria, VA 22313-1450
www.uspto.gov

K&L GATES LLP
P.O. BOX 1135
CHICAGO IL 60690

MAILED
JAN 20 2012
OFFICE OF PETITIONS

In re Application of
John Leach Beadell et al
Application No. 11/983,771
Filed: November 9, 2007
Attorney Docket No. 3718611-06185

DECISION ON PETITION

This is a decision on the petition under 37 CFR 1.182, filed, December 2, 2011, to correct the name of inventor "Randy Hedrick" to – Joseph R. Hedrick --.

The petition is **Dismissed**.

The petition is dismissed because the petition is not properly signed. Applicant's attention is directed to 37 CFR 1.33(b), which states.

> (b) Amendments and other papers. Amendments and other papers, except for written assertions pursuant to § 1.27(c)(2)(ii) of this part, filed in the application must be signed by:
> (1) A registered patent attorney or patent agent of record appointed in compliance with § 1.32(b);
> (2) A registered patent attorney or patent agent not of record who acts in a representative capacity under the provisions of § 1.34;
> (3) An assignee as provided for under §3.71(b) of this chapter; or
> (4) All of the applicants (§ 1.41(b)) for patent, unless there is an assignee of the entire interest and such assignee has taken action in the application in accordance with § 3.71 of this chapter.

An unsigned amendment (or other paper) or one not properly signed by a person having authority to prosecute the application is not entered. This applies, for instance, where the amendment (or other paper) is signed by only one of two applicants and the one signing has not been given a power of attorney by the other applicant.

Therefore, as the petition is **not** signed by all the inventors and the record herein fails to disclose that petitioner herein (Joseph R. Hedrick) was ever given a power of attorney to act on behalf of

all the inventors, or that he is an assignee of the entire interest and has complied with the provisions of 37 CFR 3.73(b), the petition is dismissed.

Further correspondence with respect to this matter should be delivered through one of the following mediums:

By mail:	Mail Stop PETITIONS Commissioner for Patents Post Office Box 1450 Alexandria, VA 22313-1450
By hand:	Customer Service Window Mail Stop Petitions Randolph Building 401 Dulany Street Alexandria, VA 22314
By fax:	(571) 273-8300 ATTN: Office of Petitions
By internet:	EFS-Web www.uspto.gov/ebc/efs_help.html (for help using EFS-Web call the Patent Electronic Business Center at (866) 217-9197)

Any questions concerning this matter may be directed to the undersigned at (571) 272-3208.

/KOC/
Karen Creasy
Petitions Examiner
Office of Petitions

UNITED STATES PATENT AND TRADEMARK OFFICE

Commissioner for Patents
United States Patent and Trademark Office
P.O. Box 1450
Alexandria, VA 22313-1450
www.uspto.gov

MAILED
FEB 13 2012
OFFICE OF PETITIONS

K&L GATES LLP
P.O. BOX 1135
CHICAGO IL 60690

In re Application of	:	
John Leagh Beadell et al	:	
Application No. 11/983,771	:	DECISION ON PETITION
Filed: November 9, 2007	:	
Attorney Docket No. 3718611-06185	:	

This is a decision on the renewed petition under 37 CFR 1.182, filed February 6, 2012, to correct the name of inventor "Randy Hedrick" to – Joseph R. Hedrick --.

The petition is **GRANTED**.

Office records have been corrected to reflect the correction in the inventor's name. A corrected Filing Receipt accompanies this decision on petition.

Applicant may request a refund of the petition fee ($400.00) paid on February 6, 2012, since the petition fee was previously paid on December 2, 2011. The request for refund should be addressed to the Office of Finance, Refund Section. A copy of this decision should accompany the request.

Any questions concerning this matter may be directed to the undersigned at (571) 272-3208.

This matter is being referred to Technology Center AU 3716.

/Karen Creasy/
Karen Creasy
Petitions Examiner
Office of Petitions

ATTACHMENT: Corrected Filing Receipt

UNITED STATES PATENT AND TRADEMARK OFFICE

UNITED STATES DEPARTMENT OF COMMERCE
United States Patent and Trademark Office
Address: COMMISSIONER FOR PATENTS
P.O. Box 1450
Alexandria, Virginia 22313-1450
www.uspto.gov

APPLICATION NUMBER	FILING or 371(c) DATE	GRP ART UNIT	FIL FEE REC'D	ATTY.DOCKET.NO	TOT CLAIMS	IND CLAIMS
11/983,771	11/09/2007	3716	1570	3718611-06185	23	1

CONFIRMATION NO. 5049

CORRECTED FILING RECEIPT

29159
K&L Gates LLP
P.O. Box 1135
CHICAGO, IL 60690

OC000000052472805

Date Mailed: 02/09/2012

Receipt is acknowledged of this non-provisional patent application. The application will be taken up for examination in due course. Applicant will be notified as to the results of the examination. Any correspondence concerning the application must include the following identification information: the U.S. APPLICATION NUMBER, FILING DATE, NAME OF APPLICANT, and TITLE OF INVENTION. Fees transmitted by check or draft are subject to collection. Please verify the accuracy of the data presented on this receipt. **If an error is noted on this Filing Receipt, please submit a written request for a Filing Receipt Correction. Please provide a copy of this Filing Receipt with the changes noted thereon. If you received a "Notice to File Missing Parts" for this application, please submit any corrections to this Filing Receipt with your reply to the Notice. When the USPTO processes the reply to the Notice, the USPTO will generate another Filing Receipt incorporating the requested corrections**

Applicant(s)

John Leagh Beadell, Sparks, NV;
Russell Chudd, Reno, NV;
Joseph R. Hedrick, Reno, NV;
Stanley H. Herum, Reno, NV;
Lucas W. Landau, Reno, NV;

Assignment For Published Patent Application

IGT, Reno, NV

Power of Attorney: The patent practitioners associated with Customer Number 29159

Domestic Priority data as claimed by applicant

This application is a CIP of 11/158,478 06/22/2005 PAT 8057296
which is a CIP of 10/661,229 09/12/2003 PAT 7494414

Foreign Applications (You may be eligible to benefit from the **Patent Prosecution Highway** program at the USPTO. Please see http://www.uspto.gov for more information.)

If Required, Foreign Filing License Granted: 12/06/2007

The country code and number of your priority application, to be used for filing abroad under the Paris Convention, is **US 11/983,771**

Projected Publication Date: Not Applicable

Non-Publication Request: No

Early Publication Request: No

Title

Bezel interface for a card loading system

Preliminary Class

463

PROTECTING YOUR INVENTION OUTSIDE THE UNITED STATES

Since the rights granted by a U.S. patent extend only throughout the territory of the United States and have no effect in a foreign country, an inventor who wishes patent protection in another country must apply for a patent in a specific country or in regional patent offices. Applicants may wish to consider the filing of an international application under the Patent Cooperation Treaty (PCT). An international (PCT) application generally has the same effect as a regular national patent application in each PCT-member country. The PCT process **simplifies** the filing of patent applications on the same invention in member countries, but **does not result** in a grant of "an international patent" and does not eliminate the need of applicants to file additional documents and fees in countries where patent protection is desired.

Almost every country has its own patent law, and a person desiring a patent in a particular country must make an application for patent in that country in accordance with its particular laws. Since the laws of many countries differ in various respects from the patent law of the United States, applicants are advised to seek guidance from specific foreign countries to ensure that patent rights are not lost prematurely.

Applicants also are advised that in the case of inventions made in the United States, the Director of the USPTO must issue a license before applicants can apply for a patent in a foreign country. The filing of a U.S. patent application serves as a request for a foreign filing license. The application's filing receipt contains further information and guidance as to the status of applicant's license for foreign filing.

Applicants may wish to consult the USPTO booklet, "General Information Concerning Patents" (specifically, the section entitled "Treaties and Foreign Patents") for more information on timeframes and deadlines for filing foreign patent applications. The guide is available either by contacting the USPTO Contact Center at 800-786-9199, or it can be viewed on the USPTO website at http://www.uspto.gov/web/offices/pac/doc/general/index.html.

For information on preventing theft of your intellectual property (patents, trademarks and copyrights), you may wish to consult the U.S. Government website, http://www.stopfakes.gov. Part of a Department of Commerce initiative, this website includes self-help "toolkits" giving innovators guidance on how to protect intellectual property in specific countries such as China, Korea and Mexico. For questions regarding patent enforcement issues, applicants may call the U.S. Government hotline at 1-866-999-HALT (1-866-999-4158).

LICENSE FOR FOREIGN FILING UNDER

Title 35, United States Code, Section 184

Title 37, Code of Federal Regulations, 5.11 & 5.15

GRANTED

The applicant has been granted a license under 35 U.S.C. 184, if the phrase "IF REQUIRED, FOREIGN FILING LICENSE GRANTED" followed by a date appears on this form. Such licenses are issued in all applications where the conditions for issuance of a license have been met, regardless of whether or not a license may be required as

set forth in 37 CFR 5.15. The scope and limitations of this license are set forth in 37 CFR 5.15(a) unless an earlier license has been issued under 37 CFR 5.15(b). The license is subject to revocation upon written notification. The date indicated is the effective date of the license, unless an earlier license of similar scope has been granted under 37 CFR 5.13 or 5.14.

This license is to be retained by the licensee and may be used at any time on or after the effective date thereof unless it is revoked. This license is automatically transferred to any related applications(s) filed under 37 CFR 1.53(d). This license is not retroactive.

The grant of a license does not in any way lessen the responsibility of a licensee for the security of the subject matter as imposed by any Government contract or the provisions of existing laws relating to espionage and the national security or the export of technical data. Licensees should apprise themselves of current regulations especially with respect to certain countries, of other agencies, particularly the Office of Defense Trade Controls, Department of State (with respect to Arms, Munitions and Implements of War (22 CFR 121-128)); the Bureau of Industry and Security, Department of Commerce (15 CFR parts 730-774); the Office of Foreign AssetsControl, Department of Treasury (31 CFR Parts 500+) and the Department of Energy.

NOT GRANTED

No license under 35 U.S.C. 184 has been granted at this time, if the phrase "IF REQUIRED, FOREIGN FILING LICENSE GRANTED" DOES NOT appear on this form. Applicant may still petition for a license under 37 CFR 5.12, if a license is desired before the expiration of 6 months from the filing date of the application. If 6 months has lapsed from the filing date of this application and the licensee has not received any indication of a secrecy order under 35 U.S.C. 181, the licensee may foreign file the application pursuant to 37 CFR 5.15(b).

SelectUSA

The United States represents the largest, most dynamic marketplace in the world and is an unparalleled location for business investment, innovation and commercialization of new technologies. The USA offers tremendous resources and advantages for those who invest and manufacture goods here. Through SelectUSA, our nation works to encourage, facilitate, and accelerate business investment. To learn more about why the USA is the best country in the world to develop technology, manufacture products, and grow your business, visit SelectUSA.gov.

UNITED STATES PATENT AND TRADEMARK OFFICE

Commissioner for Patents
United States Patent and Trademark Office
P.O. Box 1450
Alexandria, VA 22313-1450
www.uspto.gov

K&L GATES LLP
P.O. BOX 1135
CHICAGO IL 60690

MAILED

JAN 20 2012

OFFICE OF PETITIONS

In re Application of
Hedrick, et al.
Application No. 11/983,772
Filed: November 9, 2007
Attorney Docket No. 3718611-06184

DECISION ON PETITION

This is a decision on the petition under 37 CFR 1.182, filed, December 2, 2011, to correct the name of inventor "Randy Hedrick" to – Joseph R. Hedrick --.

The petition is **Dismissed**.

The petition is dismissed because the petition is not properly signed. Applicant's attention is directed to 37 CFR 1.33(b), which states.

> (b) Amendments and other papers. Amendments and other papers, except for written assertions pursuant to § 1.27(c)(2)(ii) of this part, filed in the application must be signed by:
> (1) A registered patent attorney or patent agent of record appointed in compliance with § 1.32(b);
> (2) A registered patent attorney or patent agent not of record who acts in a representative capacity under the provisions of § 1.34;
> (3) An assignee as provided for under §3.71(b) of this chapter; or
> (4) All of the applicants (§ 1.41(b)) for patent, unless there is an assignee of the entire interest and such assignee has taken action in the application in accordance with § 3.71 of this chapter.

An unsigned amendment (or other paper) or one not properly signed by a person having authority to prosecute the application is not entered. This applies, for instance, where the amendment (or other paper) is signed by only one of two applicants and the one signing has not been given a power of attorney by the other applicant.

Therefore, as the petition is **not** signed by all the inventors and the record herein fails to disclose that petitioner herein (Joseph R. Hedrick) was ever given a power of attorney to act on behalf of

all the inventors, or that he is an assignee of the entire interest and has complied with the provisions of 37 CFR 3.73(b), the petition is dismissed.

Further correspondence with respect to this matter should be delivered through one of the following mediums:

By mail:	Mail Stop PETITIONS Commissioner for Patents Post Office Box 1450 Alexandria, VA 22313-1450
By hand:	Customer Service Window Mail Stop Petitions Randolph Building 401 Dulany Street Alexandria, VA 22314
By fax:	(571) 273-8300 ATTN: Office of Petitions
By internet:	EFS-Web www.uspto.gov/ebc/efs_help.html (for help using EFS-Web call the Patent Electronic Business Center at (866) 217-9197)

Any questions concerning this matter may be directed to the undersigned at (571) 272-3208.

/KOC/
Karen Creasy
Petitions Examiner
Office of Petitions

UNITED STATES PATENT AND TRADEMARK OFFICE

Commissioner for Patents
United States Patent and Trademark Office
P.O. Box 1450
Alexandria, VA 22313-1450
www.uspto.gov

MAILED
FEB 13 2012
OFFICE OF PETITIONS

K&L GATES, LLP
P.O. BOX 1135
CHICGO IL 60690

In re Application of	:	
Joseph R. Hedrick et al	:	
Application No. 11/983,772	:	DECISION ON PETITION
Filed: November 9, 2007	:	
Attorney Docket No. 3718611-06184	:	

This is a decision on the renewed petition under 37 CFR 1.182 filed February 6, 2012, to correct the name of inventor "Randy Hedrick" to -- Joseph R. Hedrick --.

The petition is **GRANTED**.

Office records have been corrected to reflect the correction in the inventor's name. A corrected Filing Receipt accompanies this decision on petition.

Applicant may request a refund of the petition fee ($400.00) paid on February 6, 2012, since the petition fee was previously paid on December 2, 2011. The request for refund should be addressed to the Office of Finance, Refund Section. A copy of this decision should accompany the request.

Any questions concerning this matter may be directed to the undersigned at (571) 272-3208.

This matter is being referred to Technology Center AU 3716.

/Karen Creasy/
Karen Creasy
Petitions Examiner
Office of Petitions

ATTACHMENT: Corrected Filing Receipt

UNITED STATES PATENT AND TRADEMARK OFFICE

UNITED STATES DEPARTMENT OF COMMERCE
United States Patent and Trademark Office
Address: COMMISSIONER FOR PATENTS
P.O. Box 1450
Alexandria, Virginia 22313-1450
www.uspto.gov

APPLICATION NUMBER	FILING or 371(c) DATE	GRP ART UNIT	FIL FEE REC'D	ATTY.DOCKET.NO	TOT CLAIMS	IND CLAIMS
11/983,772	11/09/2007	3716	1970	3718611-06184	31	2

CONFIRMATION NO. 5045

CORRECTED FILING RECEIPT

29159
K&L Gates LLP
P.O. Box 1135
CHICAGO, IL 60690

OC000000052478817

Date Mailed: 02/09/2012

Receipt is acknowledged of this non-provisional patent application. The application will be taken up for examination in due course. Applicant will be notified as to the results of the examination. Any correspondence concerning the application must include the following identification information: the U.S. APPLICATION NUMBER, FILING DATE, NAME OF APPLICANT, and TITLE OF INVENTION. Fees transmitted by check or draft are subject to collection. Please verify the accuracy of the data presented on this receipt. **If an error is noted on this Filing Receipt, please submit a written request for a Filing Receipt Correction. Please provide a copy of this Filing Receipt with the changes noted thereon. If you received a "Notice to File Missing Parts" for this application, please submit any corrections to this Filing Receipt with your reply to the Notice. When the USPTO processes the reply to the Notice, the USPTO will generate another Filing Receipt incorporating the requested corrections**

Applicant(s)

Joseph R. Hedrick, Reno, NV;
Russell Chudd, Reno, NV;

Assignment For Published Patent Application

IGT, Reno, NV

Power of Attorney: The patent practitioners associated with Customer Number 29159

Domestic Priority data as claimed by applicant

This application is a CIP of 11/158,478 06/22/2005 PAT 8057296
which is a CIP of 10/661,229 09/12/2003 PAT 7494414

Foreign Applications (You may be eligible to benefit from the **Patent Prosecution Highway** program at the USPTO. Please see http://www.uspto.gov for more information.)

If Required, Foreign Filing License Granted: 12/04/2007

The country code and number of your priority application, to be used for filing abroad under the Paris Convention, is **US 11/983,772**

Projected Publication Date: Not Applicable

Non-Publication Request: No

Early Publication Request: No

Title

Card loading system for a data card unit

Preliminary Class

273

PROTECTING YOUR INVENTION OUTSIDE THE UNITED STATES

Since the rights granted by a U.S. patent extend only throughout the territory of the United States and have no effect in a foreign country, an inventor who wishes patent protection in another country must apply for a patent in a specific country or in regional patent offices. Applicants may wish to consider the filing of an international application under the Patent Cooperation Treaty (PCT). An international (PCT) application generally has the same effect as a regular national patent application in each PCT-member country. The PCT process **simplifies** the filing of patent applications on the same invention in member countries, but **does not result** in a grant of "an international patent" and does not eliminate the need of applicants to file additional documents and fees in countries where patent protection is desired.

Almost every country has its own patent law, and a person desiring a patent in a particular country must make an application for patent in that country in accordance with its particular laws. Since the laws of many countries differ in various respects from the patent law of the United States, applicants are advised to seek guidance from specific foreign countries to ensure that patent rights are not lost prematurely.

Applicants also are advised that in the case of inventions made in the United States, the Director of the USPTO must issue a license before applicants can apply for a patent in a foreign country. The filing of a U.S. patent application serves as a request for a foreign filing license. The application's filing receipt contains further information and guidance as to the status of applicant's license for foreign filing.

Applicants may wish to consult the USPTO booklet, "General Information Concerning Patents" (specifically, the section entitled "Treaties and Foreign Patents") for more information on timeframes and deadlines for filing foreign patent applications. The guide is available either by contacting the USPTO Contact Center at 800-786-9199, or it can be viewed on the USPTO website at http://www.uspto.gov/web/offices/pac/doc/general/index.html.

For information on preventing theft of your intellectual property (patents, trademarks and copyrights), you may wish to consult the U.S. Government website, http://www.stopfakes.gov. Part of a Department of Commerce initiative, this website includes self-help "toolkits" giving innovators guidance on how to protect intellectual property in specific countries such as China, Korea and Mexico. For questions regarding patent enforcement issues, applicants may call the U.S. Government hotline at 1-866-999-HALT (1-866-999-4158).

LICENSE FOR FOREIGN FILING UNDER

Title 35, United States Code, Section 184

Title 37, Code of Federal Regulations, 5.11 & 5.15

GRANTED

The applicant has been granted a license under 35 U.S.C. 184, if the phrase "IF REQUIRED, FOREIGN FILING LICENSE GRANTED" followed by a date appears on this form. Such licenses are issued in all applications where the conditions for issuance of a license have been met, regardless of whether or not a license may be required as

set forth in 37 CFR 5.15. The scope and limitations of this license are set forth in 37 CFR 5.15(a) unless an earlier license has been issued under 37 CFR 5.15(b). The license is subject to revocation upon written notification. The date indicated is the effective date of the license, unless an earlier license of similar scope has been granted under 37 CFR 5.13 or 5.14.

This license is to be retained by the licensee and may be used at any time on or after the effective date thereof unless it is revoked. This license is automatically transferred to any related applications(s) filed under 37 CFR 1.53(d). This license is not retroactive.

The grant of a license does not in any way lessen the responsibility of a licensee for the security of the subject matter as imposed by any Government contract or the provisions of existing laws relating to espionage and the national security or the export of technical data. Licensees should apprise themselves of current regulations especially with respect to certain countries, of other agencies, particularly the Office of Defense Trade Controls, Department of State (with respect to Arms, Munitions and Implements of War (22 CFR 121-128)); the Bureau of Industry and Security, Department of Commerce (15 CFR parts 730-774); the Office of Foreign AssetsControl, Department of Treasury (31 CFR Parts 500+) and the Department of Energy.

NOT GRANTED

No license under 35 U.S.C. 184 has been granted at this time, if the phrase "IF REQUIRED, FOREIGN FILING LICENSE GRANTED" DOES NOT appear on this form. Applicant may still petition for a license under 37 CFR 5.12, if a license is desired before the expiration of 6 months from the filing date of the application. If 6 months has lapsed from the filing date of this application and the licensee has not received any indication of a secrecy order under 35 U.S.C. 181, the licensee may foreign file the application pursuant to 37 CFR 5.15(b).

SelectUSA

The United States represents the largest, most dynamic marketplace in the world and is an unparalleled location for business investment, innovation and commercialization of new technologies. The USA offers tremendous resources and advantages for those who invest and manufacture goods here. Through SelectUSA, our nation works to encourage, facilitate, and accelerate business investment. To learn more about why the USA is the best country in the world to develop technology, manufacture products, and grow your business, visit SelectUSA.gov.

UNITED STATES PATENT AND TRADEMARK OFFICE

UNITED STATES DEPARTMENT OF COMMERCE
United States Patent and Trademark Office
Address: COMMISSIONER FOR PATENTS
P.O. Box 1450
Alexandria, Virginia 22313-1450
www.uspto.gov

APPLICATION NO.	FILING DATE	FIRST NAMED INVENTOR	ATTORNEY DOCKET NO.	CONFIRMATION NO.
11/983,773	11/09/2007	Christopher Clucas	INBRED CORN LINE G07-NPID	5563

7590 12/29/2010

Dana S. Rewoldt, Esq.
Syngenta Seeds, Inc.
2369 330th St
Box 500
Slater, IA 50244

EXAMINER
FOX, DAVID T

ART UNIT	PAPER NUMBER
1638	

MAIL DATE	DELIVERY MODE
12/29/2010	PAPER

Please find below and/or attached an Office communication concerning this application or proceeding.

The time period for reply, if any, is set in the attached communication.

UNITED STATES PATENT AND TRADEMARK OFFICE

Commissioner for Patents
United States Patent and Trademark Office
P.O. Box 1450
Alexandria, VA 22313-1450
www.uspto.gov

DEC 2 9 2010

Dana S. Rewoldt, Esq.
Syngenta Seeds
2369 330th St.
Box 500
Slater IA 50244

In re Application of:
Christopher Clucas
Serial No.: 11/983,773
Filed: November 9, 2007
Attorney Docket No.: **INBRED CORN LINE G07-NPID**

: PETITION DECISION

This is in response to the petition under 37 CFR § 1.59(b), filed December 20, 2010, to expunge information from the above identified application. This application has been allowed.

Petitioner requests that the Reply to Request for Information under 37 CFR 1.105, and attachment thereto, submitted to the Patent Office on May 11, 2009 be expunged from the record. Petitioner states either: (A) that the information contains trade secret material, proprietary material and/or material that is subject to a protective order which has not been made public; or (B) that the information submitted was unintentionally submitted and the failure to obtain its return would cause irreparable harm to the party who submitted the information or to the party in interest on whose behalf the information was submitted, and the information has not otherwise been made public. The petition fee set forth in 37 CFR § 1.17(g) has been paid.

The reasons set forth in this petition establishes to the satisfaction of the Director that expungement of the information is appropriate. The file entry for this document has been closed and as such the document is no longer publicly available, which is the IFW equivalent to removal of a paper document from a paper file wrapper.

Therefore, petitioner's petition is GRANTED.

Should there be any questions about this decision please contact Marianne C. Seidel by letter addressed to Director, TC 1600, at the address listed above, or by telephone at 571-272-0584 or by facsimile sent to the general Office facsimile number, 571-273-8300.

/MC Seidel/
Marianne C. Seidel, Quality Assurance Specialist
Technology Center 1600

UNITED STATES PATENT AND TRADEMARK OFFICE

UNITED STATES DEPARTMENT OF COMMERCE
United States Patent and Trademark Office
Address: COMMISSIONER FOR PATENTS
P.O. Box 1450
Alexandria, Virginia 22313-1450
www.uspto.gov

APPLICATION NO.	FILING DATE	FIRST NAMED INVENTOR	ATTORNEY DOCKET NO.	CONFIRMATION NO.
11/983,785	11/09/2007	Brent Delzer	G07-NPID4586	5280

7590 12/29/2010

Dana S. Rewoldt, Esq.
Syngenta Seeds, Inc.
Box 500
2369 330th St.
Slater, IA 50244

EXAMINER
IBRAHIM, MEDINA AHMED

ART UNIT	PAPER NUMBER
1638	

MAIL DATE	DELIVERY MODE
12/29/2010	PAPER

Please find below and/or attached an Office communication concerning this application or proceeding.

The time period for reply, if any, is set in the attached communication.

UNITED STATES PATENT AND TRADEMARK OFFICE

Commissioner for Patents
United States Patent and Trademark Office
P.O. Box 1450
Alexandria, VA 22313-1450
www.uspto.gov

DEC 2 9 2010

Dana S. Rewoldt, Esq.
Syngenta Seeds
2369 330th St.
Box 500
Slater IA 50244

In re Application of:
Brent Delzer
Serial No.: 11/983,785
Filed: November 9, 2007
Attorney Docket No.: **G07-NPID4586**

: PETITION DECISION

This is in response to the petition under 37 CFR § 1.59(b), filed December 20, 2010, to expunge information from the above identified application. This application has been allowed.

Petitioner requests that the Reply to Request for Information under 37 CFR 1.105, and attachment thereto, submitted to the Patent Office on July 20, 2009 be expunged from the record. Petitioner states either: (A) that the information contains trade secret material, proprietary material and/or material that is subject to a protective order which has not been made public; or (B) that the information submitted was unintentionally submitted and the failure to obtain its return would cause irreparable harm to the party who submitted the information or to the party in interest on whose behalf the information was submitted, and the information has not otherwise been made public. The petition fee set forth in 37 CFR § 1.17(g) has been paid.

The reasons set forth in this petition establishes to the satisfaction of the Director that expungement of the information is appropriate. The file entry for this document has been closed and as such the document is no longer publicly available, which is the IFW equivalent to removal of a paper document from a paper file wrapper.

Therefore, petitioner's petition is GRANTED.

Should there be any questions about this decision please contact Marianne C. Seidel by letter addressed to Director, TC 1600, at the address listed above, or by telephone at 571-272-0584 or by facsimile sent to the general Office facsimile number, 571-273-8300.

/MC Seidel/
Marianne C. Seidel, Quality Assurance Specialist
Technology Center 1600

UNITED STATES PATENT AND TRADEMARK OFFICE

COMMISSIONER FOR PATENTS
UNITED STATES PATENT AND TRADEMARK OFFICE
P.O. BOX 1450
ALEXANDRIA, VA 22313-1450
www.uspto.gov

Paper No.

LEVISOHN, BERGER, LLP
11 BROADWAY
Suite 615
NEW YORK NY 10004

MAILED
NOV 18 2010
OFFICE OF PETITIONS

In re Application of	:	
Stephen Foster	:	DECISION ON
Application No. 11/983,804	:	PETITION
Filed: November 13, 2007	:	
Atty Docket No. 1879.010	:	

This is a decision on the Petition for Revival of Application Abandoned Unintentionally Under 37 C.F.R. § 1.137(b) filed September 21, 2010.

The petition is **GRANTED**.

The above-identified application was abandoned for failure to timely file a reply to the non-final Office action mailed December 10, 2009. This Office action set a shortened statutory period for reply of three (3) months from the mail date of the action, with extensions of time obtainable under 37 CFR 1.136(a). No proper reply having been received and no extension of time obtained, the application became abandoned effective March 10, 2010. A courtesy Notice of Abandonment was sent on July 21, 2010.

On petition, petitioner submitted the required reply in the form of an amendment; paid the petition fee; and made the required statement of unintentional delay. No terminal disclaimer is required for revival.

An extension of time under 37 CFR 1.136 must be filed prior to the expiration of the maximum extendable period for reply. See In re Application of S., 8 USPQ2d 1630, 1631 (Comm'r Pats. 1988). Since the $555 extension of time fee submitted with the petition on September 21, 2010 was submitted subsequent to the maximum extendable period for reply, this fee is unnecessary and is being refunded.

Technology Center AU 3644 has been advised of this decision. The application is, thereby, forwarded to the examiner for consideration of the amendment submitted on petition filed September 21, 2010.

Telephone inquiries concerning this decision should be directed to the undersigned at (571) 272-3219.

Nancy Johnson
Senior Petitions Attorney
Office of Petitions

UNITED STATES PATENT AND TRADEMARK OFFICE

Commissioner for Patents
United States Patent and Trademark Office
P.O. Box 1450
Alexandria, VA 22313-1450
www.uspto.gov

SHERR & VAUGHN, PLLC
620 HERNDON PARKWAY
SUITE 320
HERNDON, VA 20170

MAILED

SEP 30 2010

OFFICE OF PETITIONS

In re Application of
David W. Sherrer, et al.
Application No.: 11/983,843
Filed: November 13, 2007
Attorney Docket No.: 440-0062

ON PETITION

This is a decision in response to the petition, filed August 19, 2010, to revive the above-identified application under the provisions of 37 CFR 1.137(b).

The petition is **GRANTED**.

The application became abandoned for failure to reply in a timely manner to the non-final Office action mailed October 20, 2009. A Notice of Abandonment was mailed on June 22, 2010. On August 19, 2010, the present petition was filed.

The petition satisfies the conditions for revival pursuant to the provisions of 37 CFR 1.137(b) in that petitioner has supplied (1) a proposed reply in the form of an amendment; (2) the petition fee of $1,620; and (3) an adequate statement of unintentional delay.

The application is being referred to Technology Center AU 2828 for appropriate action by the Examiner in the normal course of business on the response filed August 19, 2010.

Telephone inquiries concerning this decision should be directed to the undersigned at (571) 272-3204. Inquiries relating to further prosecution should be directed to the Technology Center.

Sherry D. Brinkley
Petitions Examiner
Office of Petitions

UNITED STATES PATENT AND TRADEMARK OFFICE

Commissioner for Patents
United States Patent and Trademark Office
P.O. Box 1450
Alexandria, VA 22313-1450
www.uspto.gov

MAILED
NOV 03 2010
OFFICE OF PETITIONS

EI DU PONT DE NEMOURS AND COMPANY
LEGAL PATENT RECORDS CENTER
BARLEY MILL PLAZA 25/1122B
4417 LANCASTER PIKE
WILMINGTON DE 19805

In re Application of
Axel Hans-Joachim HERZOG, et al
Application No. 11/983,858
Filed: November 13, 2007
Docket No. CH3145USNA

DECISION ON PETITION

This is a decision on the petition under the unintentional provisions of 37 CFR 1.137(b), filed October 1, 2010, to revive the above-identified application.

The petition is **GRANTED**.

The application became abandoned for failure to reply in a timely manner to the non-final Office action mailed, February 3, 2010, which set a shortened statutory period for reply of **three (3) months.** No extensions of time under the provisions of 37 CFR 1.136(a) were obtained. Accordingly, the application became abandoned on May 4, 2010.

The petition satisfies the requirements of 37 CFR 1.137(b) in that petitioner has supplied (1) the reply in the form of an amendment, (2) the petition fee of $1620; and (3) a proper statement of unintentional delay.

Telephone inquiries concerning this decision should be directed to the undersigned at (571) 272-6735.

This application is being referred to Technology Center AU 1796 for appropriate action by the Examiner in the normal course of business.

/DCG/
Diane C. Goodwyn
Petitions Examiner
Office of Petitions

UNITED STATES PATENT AND TRADEMARK OFFICE

UNITED STATES DEPARTMENT OF COMMERCE
United States Patent and Trademark Office
Address: COMMISSIONER FOR PATENTS
P.O. Box 1450
Alexandria, Virginia 22313-1450
www.uspto.gov

APPLICATION NO.	FILING DATE	FIRST NAMED INVENTOR	ATTORNEY DOCKET NO.	CONFIRMATION NO.
11/983,957	11/13/2007	Guy A. Rouleau	0856.2061-001	5121

7590 06/08/2011
HAMILTON, BROOK, SMITH & REYNOLDS, P.C.
530 VIRGINIA ROAD
P.O. BOX 9133
CONCORD, MA 01742-9133

EXAMINER
MACFARLANE, STACEY NEE

ART UNIT	PAPER NUMBER
1649	

MAIL DATE	DELIVERY MODE
06/08/2011	PAPER

ACKNOWLEDGEMENT OF REQUEST

Notice of Allowance/Allowability Mailed

The request to print a color drawing reference as the first paragraph in the portion of the specification containing a brief description of the drawings as required by 37 CFR 1.84 and MPEP § 608.02 has been received by the United States Patent and Trademark Office and will be entered into the specification.

571-272-4200 or 1-888-786-0101
Application Assistance Unit
Office of Data Management

FORM PTOM327-5 (Rev. 02/08)

UNITED STATES PATENT AND TRADEMARK OFFICE

Commissioner for Patents
United States Patent and Trademark Office
P.O. Box 1450
Alexandria, VA 22313-1450
www.uspto.gov

June 8, 2011

HAMILTON, BROOK, SMITH & REYNOLDS, P.C.
530 VIRGINIA ROAD
P.O. BOX 9133
CONCORD MA 01742-9133

In re Application of	:	
Rouleau, Guy A. et al	:	**DECISION ON PETITION**
Application No. 11/983,957	:	
Filed: 11/13/2007	:	***ACCEPTANCE OF COLOR***
Attorney Docket No. 0856.2061-001	:	***DRAWINGS***

This is a decision on the Petition to Accept Color Drawings under 37 C.F.R 1.84 (a) (2), received in the United States Patent and Trademark Office (USPTO) November 13, 2007.

The petition is **GRANTED**.

A grantable petition under 37 C.F.R. 1.84(a) (2) must be accompanied by the following.

1. The fee set forth under 37 C.F.R. 1.17(h),
2. Three (3) sets of the color drawings in question, or (1) set if filed via EFS, and
3. The specification contains appropriate language referring to the color drawings as the first paragraph in that portion of the specification relating to the brief description of the drawings.

The petition was accompanied by all of the required fees and drawings. The specification contains the appropriate language. Therefore, the petition is GRANTED.

Telephone inquires relating to this decision may be directed to the undersigned in the Office of Data Management at 571-272-4200.

/Diane Terry/
Quality Control Specialist
Office of Data Management
Publications Branch

UNITED STATES PATENT AND TRADEMARK OFFICE

Commissioner for Patents
United States Patent and Trademark Office
P.O. Box 1450
Alexandria, VA 22313-1450
www.uspto.gov

PANDISCIO & PANDISCIO
470 TOTTEN POND ROAD
WALTHAM, MA 02451-1914

MAILED
MAY 13 2011
OFFICE OF PETITIONS

In re Application of :
Brian J. WHELAN, et *al.* :
Application No. 11/983,995 : NOTICE UNDER 37 CFR 1.28(C)
Filed: November 13, 2007 :
Attorney Docket No. **SAR-48 D2** :

This is a notice regarding your request for acceptance of a fee deficiency submission under 37 CFR 1.28. On September 1, 1998, the Court of Appeals for the Federal Circuit held that 37 CFR 1.28(c) is the sole provision governing the time for correction of the erroneous payment of the issue fee as a small entity. **See DH Technology v. Synergystex International, Inc. 154 F.3d 1333, 47 USPQ2d 1865 (Fed. Cir. Sept. 1, 1998).**

The Office no longer investigates or rejects original or reissue applications under 37 CFR 1.56. **1098 Off. Gaz. Pat. Office 502 (January 3, 1989)**. Therefore, nothing in this Notice is intended to imply that an investigation was done.

Your fee deficiency submission under 37 CFR 1.28 is hereby **ACCEPTED**.

This application is no longer entitled to small entity status. Accordingly, all future fees paid in this application must be paid at the large entity rate.

Telephone inquiries concerning this decision should be directed to the undersigned at (571) 272-7253.

/Monica A. Graves/
Petitions Examiner, Office of Petitions

Doc Code: PET.PTA.RCAL
Document Description: Request for Recalculation in view of Wyeth

PTO/SB/131 (02-10)
Approved for use through 07/31/2010. OMB 0651-0020
U.S. Patent and Trademark Office; U. S. DEPARTMENT OF COMMERCE
Under the Paperwork Reduction Act of 1995, no persons are required to respond to a collection of information unless it displays a valid OMB control number.

REQUEST FOR RECALCULATION OF PATENT TERM ADJUSTMENT IN VIEW OF *WYETH**

Attorney Docket Number: 10-100	
Application Number: 11/984,049	Filing Date (or 371(b) or (f) Date): November 13, 2007
Patent Number: 7,668,119	Issue Date: February 23, 2010
First Named Inventor: Pascal Thubert	
Title: Ad Hoc Network Formation & Management Based on Aggregation of Ad Hoc Nodes Accordi	

PATENTEE HEREBY REQUESTS RECALCULATION OF THE PATENT TERM ADJUSTMENT (PTA) UNDER 35 USC 154(b) INDICATED ON THE ABOVE-IDENTIFIED PATENT. THE PATENTEE'S SOLE BASIS FOR REQUESTING THE RECALCULATION IS THE USPTO'S PRE-*WYETH* INTERPRETATION OF 35 U.S.C. 154(b)(2)(A).

Note: This form is only for requesting a recalculation of PTA for patents issued before March 2, 2010, if the sole basis for requesting the recalculation is the USPTO's pre-*Wyeth* interpretation of 35 U.S.C. 154(b)(2)(A). See Instruction Sheet on page 2 for more information.

Patentees are reminded that to preserve the right to review in the United States District Court for the District of Columbia of the USPTO's patent term adjustment determination, a patentee must ensure that he or she also takes the steps required under 35 U.S.C. 154(b)(3) and (b)(4) and 37 CFR 1.705 in a timely manner.

**Wyeth v. Kappos*, No. 2009-1120 (Fed. Cir., Jan. 7, 2010).

Signature /Thomas J. Frame/	Date August 4, 2010
Name (Print/Typed) Thomas J. Frame	Registration Number 47,232

***Note**: Signatures of all the inventors or assignees of record of the entire interest or their representative(s) are required in accordance with 37 CFR 1.33 and 11.18. Please see 37 CFR 1.4(d) for the form of the signature. If necessary, submit multiple forms for more than one signature, see below**.*

☐ *Total of _____ forms are submitted.

The information is required to obtain or retain a benefit by the public which is to file (and by the USPTO to process) an application. Confidentiality is governed by 35 U.S.C. 122 and 37 CFR 1.11 and 1.14. This collection is estimated to take 12 hours to complete, including gathering, preparing, and submitting the completed application form to the USPTO. Time will vary depending upon the individual case. Any comments on the amount of time you require to complete this form and/or suggestions for reducing this burden, should be sent to the Chief Information Officer, U.S. Patent and Trademark Office, U.S. Department of Commerce, P.O. Box 1450, Alexandria, VA 22313-1450. DO NOT SEND FEES OR COMPLETED FORMS TO THIS ADDRESS. **SEND TO: Commissioner for Patents, P.O. Box 1450, Alexandria, VA 22313-1450.**

If you need assistance in completing the form, call 1-800-PTO-9199 and select option 2.

Under the Paperwork Reduction Act of 1995, no persons are required to respond to a collection of information unless it displays a valid OMB control number.

Instruction Sheet for: REQUEST FOR RECALCULATION OF PATENT TERM ADJUSTMENT IN VIEW OF *WYETH**

(Not to be Submitted to the USPTO)

This form is only for requesting a recalculation of PTA for patents issued before March 2, 2010, if the sole basis for requesting the recalculation is the USPTO's pre-*Wyeth* interpretation of 35 U.S.C. 154(b)(2)(A).

This form must be filed within 180 days of the day the patent was granted, with the following exception:

> Patentees who received a decision from the USPTO under the USPTO's pre-Wyeth interpretation of 35 U.S.C. 154(b)(2)(A) may file a request for reconsideration of that decision if such a request for reconsideration is filed within **two months** of the date of the decision (37 CFR 1.181(f)). If the patentee's sole basis for requesting reconsideration of the decision is the USPTO's pre-Wyeth interpretation of 35 U.S.C. 154(b)(2)(A), the request for reconsideration need only state that reconsideration is being requested in view of Wyeth (this form may be used for this purpose if it is filed within **two months** of the date of the decision from the USPTO).

Do not use this form if the application has been allowed, but not yet issued as a patent.

1. **For patents issued before March 2, 2010:** A request for reconsideration under 37 CFR 1.705(d) and the fee set forth in 37 CFR 1.18(e) are not required, provided that the patentee's sole basis for requesting recalculation of the PTA in the patent is the USPTO's pre-*Wyeth* interpretation of 35 U.S.C. 154(b)(2)(A) and this form is filed within 180 days of the day the patent was granted.

2. **For patents issued on or after March 2, 2010 (do not use this form):** Patentees seeking a revised PTA in a patent issued on or after March 2, 2010, must file a request for reconsideration under 37 CFR 1.705(d) that complies with the requirements of 37 CFR 1.705(b)(1) and (b)(2) within two months of the day the patent issued.

For more information, see "Notice Concerning Calculation of the Patent Term Adjustment With Respect to the Overlapping Delay Provision of 35 U.S.C. 154(b)(2)(A)" available on the USPTO Web site at http://www.uspto.gov/patents/law/notices/2010.jsp.

**Wyeth v. Kappos*, No. 2009-1120 (Fed. Cir., Jan. 7, 2010).

Privacy Act Statement

The **Privacy Act of 1974 (P.L. 93-579)** requires that you be given certain information in connection with your submission of the attached form related to a patent application or patent. Accordingly, pursuant to the requirements of the Act, please be advised that: (1) the general authority for the collection of this information is 35 U.S.C. 2(b)(2); (2) furnishing of the information solicited is voluntary; and (3) the principal purpose for which the information is used by the U.S. Patent and Trademark Office is to process and/or examine your submission related to a patent application or patent. If you do not furnish the requested information, the U.S. Patent and Trademark Office may not be able to process and/or examine your submission, which may result in termination of proceedings or abandonment of the application or expiration of the patent.

The information provided by you in this form will be subject to the following routine uses:

1. The information on this form will be treated confidentially to the extent allowed under the Freedom of Information Act (5 U.S.C. 552) and the Privacy Act (5 U.S.C 552a). Records from this system of records may be disclosed to the Department of Justice to determine whether disclosure of these records is required by the Freedom of Information Act.
2. A record from this system of records may be disclosed, as a routine use, in the course of presenting evidence to a court, magistrate, or administrative tribunal, including disclosures to opposing counsel in the course of settlement negotiations.
3. A record in this system of records may be disclosed, as a routine use, to a Member of Congress submitting a request involving an individual, to whom the record pertains, when the individual has requested assistance from the Member with respect to the subject matter of the record.
4. A record in this system of records may be disclosed, as a routine use, to a contractor of the Agency having need for the information in order to perform a contract. Recipients of information shall be required to comply with the requirements of the Privacy Act of 1974, as amended, pursuant to 5 U.S.C. 552a(m).
5. A record related to an International Application filed under the Patent Cooperation Treaty in this system of records may be disclosed, as a routine use, to the International Bureau of the World Intellectual Property Organization, pursuant to the Patent Cooperation Treaty.
6. A record in this system of records may be disclosed, as a routine use, to another federal agency for purposes of National Security review (35 U.S.C. 181) and for review pursuant to the Atomic Energy Act (42 U.S.C. 218(c)).
7. A record from this system of records may be disclosed, as a routine use, to the Administrator, General Services, or his/her designee, during an inspection of records conducted by GSA as part of that agency's responsibility to recommend improvements in records management practices and programs, under authority of 44 U.S.C. 2904 and 2906. Such disclosure shall be made in accordance with the GSA regulations governing inspection of records for this purpose, and any other relevant (*i.e.*, GSA or Commerce) directive. Such disclosure shall not be used to make determinations about individuals.
8. A record from this system of records may be disclosed, as a routine use, to the public after either publication of the application pursuant to 35 U.S.C. 122(b) or issuance of a patent pursuant to 35 U.S.C. 151. Further, a record may be disclosed, subject to the limitations of 37 CFR 1.14, as a routine use, to the public if the record was filed in an application which became abandoned or in which the proceedings were terminated and which application is referenced by either a published application, an application open to public inspection or an issued patent.
9. A record from this system of records may be disclosed, as a routine use, to a Federal, State, or local law enforcement agency, if the USPTO becomes aware of a violation or potential violation of law or regulation.

UNITED STATES PATENT AND TRADEMARK OFFICE

UNITED STATES DEPARTMENT OF COMMERCE
United States Patent and Trademark Office
Address: COMMISSIONER FOR PATENTS
P.O. Box 1450
Alexandria, Virginia 22313-1450
www.uspto.gov

LEON R TURKEVICH
2000 M STREET NW
7TH FLOOR
WASHINGTON, DC 200363307

Mail Date: 08/12/2010

Applicant	: Pascal Thubert	: DECISION ON REQUEST FOR
Patent Number	: 7668119	: RECALCULATION of PATENT
Issue Date	: 02/23/2010	: TERM ADJUSTMENT IN VIEW
Application No	: 11/984,049	: OF WYETH AND NOTICE OF INTENT TO
Filed	: 11/13/2007	: ISSUE CERTIFICATE OF CORRECTION
		:

The Request for Recalculation is **GRANTED** to the extent indicated.

The patent term adjustment has been determined to be **268** days. The USPTO will *sua sponte* issue a certificate of correction reflecting the amount of PTA days determined by the recalculation.

Prior to the issuance of the certificate of correction, the USPTO will afford patentee an opportunity to be heard and request reconsideration. Accordingly, patentee has **one month or thirty (30) days**, whichever is longer, to file a request for reconsideration of this patent term adjustment calculation. See 35 U.S.C. 154(b)(3)(B)(ii) and 37 CFR 1.322(a)(4). No extensions of time will be granted under 37 CFR 1.136.

Patentee should use document code PET.OP if electronically filing a request for reconsideration of this patent term adjustment calculation. The patentee must also include the information required by 37 CFR 1.705(b)(2) and the fee required by 37 CFR 1.18(e). If patentee does not file a timely request for reconsideration of this patent term adjustment calculation including the information required by 37 CFR 1.705(b)(2) and the fee required by 37 CFR 1.18(e), the USPTO will issue a certificate of correction reflecting the PTA determination noted above.

Patentee should be aware that in order to preserve the right to review in the United States District Court for the District of Columbia of the USPTO patent term adjustment determination, patentee must ensure that he or she also take the steps required under 35 U.S.C. 154(b)(4)(A) in a timely manner. Nothing in the request for recalculation should be construed as providing an alternative time frame for commencing a civil action under 35 U.S.C. 154(b)(4)(A).

Any questions concerning this decision should be directed to the Office of Patent Legal Administration at 571-272-7702.

UNITED STATES PATENT AND TRADEMARK OFFICE

Commissioner for Patents
United States Patent and Trademark Office
P.O. Box 1450
Alexandria, VA 22313-1450
www.uspto.gov

KLEIN, O'NEILL & SINGH, LLP
18200 VON KARMAN AVENUE
SUITE 725
IRVINE CA 92612

MAILED

SEP 15 2011

OFFICE OF PETITIONS

In re Application:	:	
Richard Lee-Chee Kuo	:	
Application No. 11/984,075	:	ON PETITION
Filed: November 13, 2007	:	
Attorney Docket No. 1291-080.101	:	

This is a notice regarding your request for acceptance of a fee deficiency submission under 37 CFR 1.28 filed August 26, 2011.

On September 1, 1998, the Court of Appeals for the Federal Circuit held that 37 CFR 1.28(c) is the sole provision governing the time for correction of the erroneous payment of the issue fee as a small entity. **See DH Technology v. Synergystex International, Inc. 154 F.3d 1333, 47 USPQ2d 1865 (Fed. Cir. Sept. 1, 1998).**

The Office no longer investigates or rejects original or reissue applications under 37 CFR 1.56. **1098 Off. Gaz. Pat. Office 502 (January 3, 1989)**. Therefore, nothing in this Notice is intended to imply that an investigation was done.

Your fee deficiency submission under 37 CFR 1.28 is hereby **ACCEPTED**.

This application is no longer entitled to small entity status. Accordingly, all future fees paid in this application must be paid at the large entity rate.

Telephone inquiries concerning this decision should be directed to the undersigned at (571) 272-7751.

/Joan Olszewski/
Joan Olszewski
Petitions Examiner
Office of Petitions

UNITED STATES PATENT AND TRADEMARK OFFICE

Commissioner for Patents
United States Patent and Trademark Office
P.O. Box 1450
Alexandria, VA 22313-1450
www.uspto.gov

FUJITSU PATENT CENTER
FUJITSU MANAGEMENT SERVICES OF AMERICA, INC.
2318 MILL ROAD, SUITE 1010
ALEXANDRIA VA 22314

MAILED
SEP 28 2010
OFFICE OF PETITIONS

In re Application of	:	
Yoshiro Tanaka et al	:	
Application No. 11/984,106	:	DECISION GRANTING PETITION
Filed: November 13, 2007	:	UNDER 37 CFR 1.313(c)(2)
Attorney Docket No. 06-53664	:	

This is a decision on the petition under 37 CFR 1.313(c)(2), filed September 28, 2010, to withdraw the above-identified application from issue after payment of the issue fee.

The petition is **GRANTED**.

The above-identified application is withdrawn from issue for consideration of a submission under 37 CFR 1.114 (request for continued examination). *See* 37 CFR 1.313(c)(2).

Petitioner is advised that the issue fee paid on May 24, 2010 cannot be refunded. If, however, this application is again allowed, petitioner may request that it be applied towards the issue fee required by the new Notice of Allowance.[1]

Telephone inquiries should be directed to the undersigned at (571) 272-3208.

This application is being referred to Technology Center AU 2841 for processing of the request for continued examination under 37 CFR 1.114 and for consideration of the concurrently filed IDS.

/Karen Creasy/
Karen Creasy
Petitions Examiner
Office of Petitions

---

[1] *The request to apply the issue fee to the new Notice may be satisfied by completing and returning the new Part B – Fee(s) Transmittal Form (along with any balance due at the time of submission). Petitioner is advised that the Issue Fee Transmittal Form must be completed and timely submitted to avoid abandonment of the application.*

UNITED STATES PATENT AND TRADEMARK OFFICE

Commissioner for Patents
United States Patent and Trademark Office
P.O. Box 1450
Alexandria, VA 22313-1450
www.uspto.gov

STAAS & HALSEY LLP
SUITE 700
1201 NEW YORK AVENUE, N.W.
WASHINGTON DC 20005

MAILED

NOV 16 2011

OFFICE OF PETITIONS

In re Application of	:	
Masakazu Bamba	:	
Application No. 11/984216	:	
Filing or 371(c) Date: 11/14/2007	:	
Attorney Docket Number:	:	
1614.1677	:	ON PETITION

This is a decision on the "Petition to Resend Office Action," filed October 20, 2011. The petition is properly treated as a petition to withdraw the holding of abandonment based upon non-receipt of an Office action under 37 CFR 1.181(a).

This Petition is hereby granted.

The above-identified application became abandoned for failure to timely and properly reply to the final Office action, mailed April 13, 2011. The Office action set a three (3) month period for reply. No reply having been received, the application became abandoned on July 14, 2011.

With the present petition, Applicant has demonstrated non-receipt of the Office action by a preponderance of the evidence.

In view of the foregoing, the petition is granted. The holding of abandonment is hereby withdrawn.

No petition fee has been charged and none is due.

The application will be referred to Technology Center Art Unit 2811 for re-mailing of the Office action and re-starting the period for reply, in the normal course of business.

Telephone inquiries concerning this matter should be directed to the undersigned at (571) 272-3232.

/DW/

Derek Woods
Attorney
Office of Petitions

UNITED STATES PATENT AND TRADEMARK OFFICE

UNITED STATES DEPARTMENT OF COMMERCE
United States Patent and Trademark Office
Address: COMMISSIONER FOR PATENTS
P.O. Box 1450
Alexandria, Virginia 22313-1450
www.uspto.gov

APPLICATION NO.	FILING DATE	FIRST NAMED INVENTOR	ATTORNEY DOCKET NO.	CONFIRMATION NO.
11/984,222	11/14/2007	Jin Xiaoying	2551-0025	5832

42624 7590 06/10/2011
DAVIDSON BERQUIST JACKSON & GOWDEY LLP
4300 WILSON BLVD., 7TH FLOOR
ARLINGTON, VA 22203

EXAMINER
KRASNIC, BERNARD

ART UNIT	PAPER NUMBER
2624	

MAIL DATE	DELIVERY MODE
06/10/2011	PAPER

Please find below and/or attached an Office communication concerning this application or proceeding.

The time period for reply, if any, is set in the attached communication.

UNITED STATES PATENT AND TRADEMARK OFFICE

Commissioner for Patents
United States Patent and Trademark Office
P.O. Box 1450
Alexandria, VA 22313-1450
www.uspto.gov

DAVIDSON BERQUIST JACKSON & GOWDEY LLP
4300 WILSON BLVD., 7TH FLOOR
ARLINGTON VA 22203

JUN 10 2011

In re Application of	:	
Xiaoying, Jin	:	
Serial No.: 11/984,222	:	
Filed: November 14, 2007	:	DECISION ON PETITION
For: **SEGMENTATION-BASED IMAGE PROCESSING SYSTEM**	:	*ACCEPTANCE OF COLOR PHOTOGRAPHS*

This is a decision on the petition under 37 C.F.R. § 1.84(a)(2) filed November 14, 2007, requesting acceptance of colored drawings.

The petition requests that the color drawings identified in Figures 2A, 2B and 8 be accepted in lieu of black and white drawings.

A grantable petition under 37 C.F.R. §1.84(a)(2) must be accompanied by a fee set forth under 37 C.F.R. § 1.17(h), 3 (three) sets of the color drawings in question, and the specification must contain, or be amended to contain, the following language as the first paragraph in that portion of the specification relating to the brief description of the drawings:

"The file of this patent contains at least one drawing executed in color. Copies of this patent with color drawing(s) will be provided by the Patent and Trademark Office upon request and payment of the necessary fee."

The *petition* is **GRANTED**.

Michael Horabik
Special Program Examiner
Technology Center 2600
Communications

UNITED STATES PATENT AND TRADEMARK OFFICE

UNITED STATES DEPARTMENT OF COMMERCE
United States Patent and Trademark Office
Address: COMMISSIONER FOR PATENTS
P.O. Box 1450
Alexandria, Virginia 22313-1450
www.uspto.gov

APPLICATION NO.	FILING DATE	FIRST NAMED INVENTOR	ATTORNEY DOCKET NO.	CONFIRMATION NO.
11/984,268	11/15/2007	Seunghun Chae	303/019	6679

7590 09/07/2010
LEE & MORSE, P.C.
3141 FAIRVIEW PARK DRIVE
SUITE 500
FALLS CHURCH, VA 22042

EXAMINER
DALRYMPLE, TROY

ART UNIT	PAPER NUMBER
4121	

MAIL DATE	DELIVERY MODE
09/07/2010	PAPER

DECISION GRANTING PETITION UNDER 37 CFR 1.138(d)

The declaration of express abandonment is recognized

This is in response to the petition under 37 CFR 1.138(d), requesting for a refund of any previously paid search fee and excess claims fee in the above-identified application.

The petition is granted.

The express abandonment is recognized. Any previously paid search fee and excess claims fee are hereby refunded.

Telephone inquiries should be directed to the Office of Data Management at (571) 272-4200.

Betty Powell

Patent Publication Branch
Office of Data Management

FORM PET651G (Rev. 08/07)

UNITED STATES PATENT AND TRADEMARK OFFICE

Commissioner for Patents
United States Patent and Trademark Office
P.O. Box 1450
Alexandria, VA 22313-1450
www.uspto.gov

JONATHAN P. O'BRIEN, PH.D.
HONIGMAN MILLER SCHWARTZ AND COHN LLP
350 EAST MICHIGAN AVENUE
SUITE 300
KALAMAZOO MI 49007

MAILED

JUL 21 2011

OFFICE OF PETITIONS

In re Application
Laval Chan Chun Kong et al.
Application No. 11/984,330
Filed: November 15, 2007
Attorney Docket No. 223306/VIRO-155US/301581

: DECISION ON APPLICATION
: FOR PATENT TERM ADJUSTMENT

This is in response to the REQUEST FOR RECONSIDERATION OF PATENT TERM ADJUSTMENT UNDER 37 C.F.R. § 1.705(b) filed June 29, 2011. Applicant requests that the determination of patent term adjustment be corrected from 175 to 484 days. Applicant requests this correction in part on the basis that the Office will take in excess of three years to issue this patent and is considered in light of the recent court decision in light of the Court of Appeals for the Federal Circuit's decision in *Wyeth v. Kappos*, 2009-1120 (Fed. Cir. 1-7-2010).

As the instant application for patent term adjustment requests reconsideration of the patent term adjustment as it relates to the Office's failure to issue the patent within three years of the filing date, the application for patent term adjustment under 37 CFR 1.705(b) is **DISMISSED as PREMATURE**.

Knowledge of the actual date the patent issues is required to calculate the amount, if any, of additional patent term patentees are entitled to for Office failure to issue the patent within three years. See 37 CFR 1.702(b). (This is true even where a request for continued examination (RCE) was filed). The computer will not undertake the § 1.702(b) calculation until the actual date of issuance of the patent has been determined. Likewise, the computer will not calculate any further Office delay under 37 CFR 1.702(a)(4) or applicant delay under 37 CFR 1.704(c)(10) until the actual date of issuance of the patent has been determined. As such, the Office cannot make a determination on the patent term adjustment relating to those provisions until the patent has issued.

Requesting reconsideration of the patent term adjustment to be indicated on the patent under 37 CFR 1.705(b) based on the initial determination of patent term adjustment and a projected issuance date of the patent (or even the filing date of the request for continued examination) is premature. Accordingly, it is appropriate to dismiss such a request as premature.

Rather than file an application for patent term adjustment under 37 CFR 1.705(b) contesting the 37 CFR 1.702(b) calculation at the time of the mailing of the notice of allowance, applicants are advised that they may wait until the time of the issuance of the patent and file a request for reconsideration of the patent term adjustment pursuant to 37 CFR 1.705(d). As the USPTO does not calculate the amount of time earned pursuant to 37 CFR 1.702(b) until the time of the issuance of the patent, the Office will consider any request for reconsideration of the patent term adjustment due to an error in the calculation of 37 CFR 1.702(b) to be timely if the request for reconsideration is filed within two months of the issuance of the patent. However, as to all other bases for contesting the initial determination of patent term adjustment received with the notice of allowance, applicants must timely file an application for patent term adjustment prior to the payment of the issue fee.[1]

The Office acknowledges submission of the $200.00 fee set forth in 37 CFR 1.18(e) for consideration of the application for patent term adjustment under 37 CFR 1.705(b).

Any request for reconsideration of the patent term adjustment indicated on the patent must be timely filed within two months after issuance pursuant to 37 CFR 1.705(d) and must include payment of the required fee under 37 CFR 1.18(e).

The Office of Data Management has been advised of this decision. This application is being referred to the Office of Data Management for issuance of the patent.

Telephone inquiries specific to this decision should be directed to the undersigned at (571) 272-3212.

Patricia Faison-Ball

Patricia Faison-Ball
Senior Petitions Attorney
Office of Petitions

---

[1] For example, if applicants dispute both the calculation of patent term adjustment under 37 CFR 1.702(a)(1) for Office failure to mail a first Office action or notice of allowance not later than fourteen months after the date on which the application was filed, and under 37 CFR 1.702(b) for Office failure to issue a patent within three years of the actual filing date of the application, then applicants must still timely file an application for patent term adjustment prior to the payment of the issue fee to contest the calculation of Office delay in issuing a first Office action or notice of allowance. See 37 CFR 1.705(b) and 35 U.S.C. 154(b)(3)(B). A dispute as to the calculation of the § 1.702(a)(1) period raised on request for reconsideration of patent term adjustment under 37 CFR 1.705(d) will be dismissed as untimely filed.

UNITED STATES PATENT AND TRADEMARK OFFICE

Commissioner for Patents
United States Patent and Trademark Office
P.O. Box 1450
Alexandria, VA 22313-1450
www.uspto.gov

MAILED
MAR 02 2011
OFFICE OF PETITIONS

MILLEN, WHITE, ZELAND & BRANIGAN, P.C.
2200 CLARENDON BLVD.
SUITE 1400
ARLINGTON VA 22201

In re Application of	:	
Ulrike Fuhrmann et al	:	
Application No. 11/984,331	:	DECISION ON PETITION
Filed: November 15, 2007	:	UNDER 37 CFR 1.313(c)
Attorney Docket No. SCH-2188	:	

This is a decision on the petition filed March 1, 2011, which is being treated under 37 CFR 1.313(c), to withdraw the above-identified application from issue after payment of the issue fee.

The petition is **GRANTED**.

The above-identified application is withdrawn from issue for consideration of a submission under 37 CFR 1.114 (request for continued examination). *See* 37 CFR 1.313(c)(2).

Petitioner is advised that the issue fee paid on February 3, 2011, cannot be refunded. If, however, this application is again allowed, petitioner may request that it be applied towards the issue fee required by the new Notice of Allowance.[1]

Telephone inquiries should be directed to the undersigned at (571) 272-3208.

This application is being referred to Technology Center AU 1628 for processing of the request for continued examination under 37 CFR 1.114 and for consideration of the concurrently filed IDS.

/Karen Creasy/
Karen Creasy
Petitions Examiner
Office of Petitions

---

[1] *The request to apply the issue fee to the new Notice may be satisfied by completing and returning the new Part B – Fee(s) Transmittal Form (along with any balance due at the time of submission). Petitioner is advised that the Issue Fee Transmittal Form* ***must*** *be completed and timely submitted to avoid abandonment of the application.*

UNITED STATES PATENT AND TRADEMARK OFFICE

Commissioner for Patents
United States Patent and Trademark Office
P.O. Box 1450
Alexandria, VA 22313-1450
www.uspto.gov

MILLEN, WHITE, ZELANO & B RANIGAN, P.C.
2200 CLARENDON BLVD.
SUITE 1400
ARLINGTON VA 22201

MAILED
MAY 27 2011
OFFICE OF PETITIONS

In re Application of	:	
Ulrike Fuhrmann et al	:	
Application No. 11/984,331	:	DECISION GRANTING PETITION
Filed: November 15, 2007	:	UNDER 37 CFR 1.313(c)(2)
Attorney Docket No. SCH-2188	:	

This is a decision on the petition under 37 CFR 1.313(c)(2), filed May 26, 2011, to withdraw the above-identified application from issue after payment of the issue fee.

The petition is **GRANTED**.

The above-identified application is withdrawn from issue for consideration of a submission under 37 CFR 1.114 (request for continued examination). *See* 37 CFR 1.313(c)(2).

Petitioner is advised that the issue fee paid on April 22, 2011 cannot be refunded. If, however, this application is again allowed, petitioner may request that it be applied towards the issue fee required by the new Notice of Allowance.[1]

Telephone inquiries should be directed to the undersigned at (571) 272-3208.

This application is being referred to Technology Center AU 1628 for processing of the request for continued examination under 37 CFR 1.114 and for consideration of the concurrently filed IDS.

/Karen Creasy/
Karen Creasy
Petitions Examiner
Office of Petitions

[1] *The request to apply the issue fee to the new Notice may be satisfied by completing and returning the new Part B – Fee(s) Transmittal Form (along with any balance due at the time of submission). Petitioner is advised that the Issue Fee Transmittal Form must be completed and timely submitted to avoid abandonment of the application.*

UNITED STATES PATENT AND TRADEMARK OFFICE

UNITED STATES DEPARTMENT OF COMMERCE
United States Patent and Trademark Office
Address: COMMISSIONER FOR PATENTS
P.O. Box 1450
Alexandria, Virginia 22313-1450
www.uspto.gov

APPLICATION NO.	FILING DATE	FIRST NAMED INVENTOR	ATTORNEY DOCKET NO.	CONFIRMATION NO.
11/984,400	11/16/2007	Sarvar Patel	29250-002345/US/01	8381

30594 7590 11/28/2011
HARNESS, DICKEY & PIERCE, P.L.C.
P.O. BOX 8910
RESTON, VA 20195

EXAMINER
ARMOUCHE, HADI S

ART UNIT	PAPER NUMBER
2432	

MAIL DATE	DELIVERY MODE
11/28/2011	PAPER

Please find below and/or attached an Office communication concerning this application or proceeding.

The time period for reply, if any, is set in the attached communication.

UNITED STATES PATENT AND TRADEMARK OFFICE

Commissioner for Patents
United States Patent and Trademark Office
P.O. Box 1450
Alexandria, VA 22313-1450
www.uspto.gov

HARNESS, DICKEY & PIERCE, P.L.C.
P.O. BOX 8910
RESTON VA 20195

In re Application of:
Ding
Appl. No.: 11/984,400
Filed: November 16, 2007
For: **PROCESSING METHOD FOR MESSAGE INTEGRITY WITH TOLERANCE FOR NON-SEQUENTIAL ARRIVAL OF MESSAGE DATA**

DECISION ON PETITION
UNDER 37 CFR § 1.59

This is a decision on the petition under 37 CFR § 1.59(b), filed on October 17, 2011, to expunge information submitted pursuant to MPEP § 724.05 III.

The petition is **DISMISSED**.

Petitioner requests that the Information Disclosure Statement and Co-Pending Letter filed on January 13, 2011, and Information Disclosure Statement filed on September 26, 2011 be expunged from the record because these documents are present in an incorrect application file. The petition fee set forth in 37 CFR § 1.17(g) has been paid.

Petition to expunge information submitted pursuant to MPEP § 724.05 III (Information Submitted In Incorrect Application) will be governed by the factors enumerated in MPEP § 724.05 II.

In accordance with MPEP 724.05 II, a petition to expunge information unintentionally submitted should include:

(A) the Office can effect such return prior to the issuance of any patent on the application at issue;

(B) it is stated that the information submitted was unintentionally submitted and the failure to obtain its return would cause irreparable harm to the party who submitted the information or to the party in interest on whose behalf the information was submitted;

(C) the information has not otherwise been made public;

(D) there is a commitment on the part of the petitioner to retain such information for the period of any patent with regard to which such information is submitted;

(E) it is established to the satisfaction of the Director that the information to be returned is not material information under 37 CFR 1.56; and

(F) the petition fee as set forth in 37 CFR 1.17(g) is included.

A review of the file indicates that no statement has been made about irreparable harm to the party who submitted the information nor to the party in interest on whose behalf the information

was submitted, no statement has been made about the information submitted has not otherwise been made public, nor has there been a commitment on the part of the petitioner to retain such information for the period of any patent.

A review of the information submitted indicates that the information is drawn to the same area of technology as petitioner's claims (transmission and authentication), accordingly, it is not appropriate to make a final determination of whether or not the material requested to be expunged is "material," with "materiality" being defined as any information which the examiner considers as being important to a determination of patentability of the claims.

During prosecution on the merits, the examiner will determine whether or not the information submitted on January 13, 2011 and September 26, 2011 is considered to be "material." Once prosecution on the merits is closed, applicant may re-submit a petition to expunge the information. No further fee is required for such a second submission of a petition under 37 CFR § 1.59 to expunge information. If the information is not considered by the examiner to be material, the information will be removed from the file.

Any inquiry concerning this decision should be directed to the undersigned whose telephone number is (571) 272-7294.

/Christopher Grant/
Christopher Grant
Quality Assurance Specialist
Technology Center 2400
Networking, Multiplexing, Cable and Security

UNITED STATES PATENT AND TRADEMARK OFFICE

Commissioner for Patents
United States Patent and Trademark Office
P.O. Box 1450
Alexandria, VA 22313-1450
www.uspto.gov

Paper No.

Muncy, Geissler, Olds & Lowe, PLLC
4000 Legato Road
Suite 310
Fairfax VA 22033

MAILED
SEP 13 2010
OFFICE OF PETITIONS

In re Application of	:	
Liao et al.	:	
Application No. 11/984,409	:	LETTER REGARDING
Filed: November 16, 2007	:	FEE DEFICIENCY PAYMENT
Atty Docket No. 3722-0457PUS1	:	

This is in response to the NOTIFICATION OF ERRONEOUS PAYMENT OF SMALL ENTITY FEES UNDER 37 C.F.R. §1.28 filed April 8, 2010, notifying the Office of loss of entitlement to small entity status.

The Office no longer investigates or rejects original or reissue applications under 37 CFR 1.56. 1098 Off. Gaz. Pat. Office 502 (January 3, 1989). Therefore, nothing in this Notice is intended to imply that an investigation was done.

This letter includes an itemization of the fee deficiencies and payment as required by 37 CFR 1.28(c)(2)(ii).

Your notification of a loss of entitlement to small entity status is made of record and your fee deficiency submission under 37 CFR 1.28 is hereby **ACCEPTED**.

Telephone inquiries related to this decision should be directed to the undersigned at 571-272-3219.

Nancy Johnson
Senior Petitions Attorney
Office of Petitions

UNITED STATES PATENT AND TRADEMARK OFFICE

Commissioner for Patents
United States Patent and Trademark Office
P.O. Box 1450
Alexandria, VA 22313-1450
www.uspto.gov

Decision Date : April 26,2011

In re Application of :

Kyosuke Sone

DECISION ON PETITION

UNDER CFR 1.313(c)(2)

Application No : 11984426

Filed : 16-Nov-2007

Attorney Docket No : 06-52636

This is an electronic decision on the petition under 37 CFR 1.313(c)(2), filed April 26,2011 , to withdraw the above-identified application from issue after payment of the issue fee.

The petition is **GRANTED.**

The above-identified application is withdrawn from issue for consideration of a submission under 37 CFR 1.114 (request for continued examination). See 37 CFR 1.313(c)(2).

Petitioner is advised that the issue fee paid in this application cannot be refunded. If, however, this application is again allowed, petitioner may request that it be applied towards the issue fee required by the new Notice of Allowance.

Telephone inquiries concerning this decision should be directed to the Patent Electronic Business Center (EBC) at 866-217-9197.

This application file is being referred to Technology Center AU 2613 for processing of the request for continuing examination under 37 CFR 1.114 .

Office of Petitions

Doc Code: PET.AUTO Document Description: Petition automatically granted by EFS-Web	PTO/SB/140 U.S. Patent and Trademark Office Department of Commerce

Electronic Petition Request	**PETITION TO WITHDRAW AN APPLICATION FROM ISSUE AFTER PAYMENT OF THE ISSUE FEE UNDER 37 CFR 1.313(c)**
Application Number	11984426
Filing Date	16-Nov-2007
First Named Inventor	Kyosuke Sone
Art Unit	2613
Examiner Name	DARREN WOLF
Attorney Docket Number	06-52636
Title	OPTICAL TRANSMISSION SYSTEM

An application may be withdrawn from issue for further action upon petition by the applicant. To request that the Office withdraw an application from issue, applicant must file a petition under this section including the fee set forth in § 1.17(h) and a showing of good and sufficient reasons why withdrawal of the application from issue is necessary.

APPLICANT HEREBY PETITIONS TO WITHDRAW THIS APPLICATION FROM ISSUE UNDER 37 CFR 1.313(c).

A grantable petition requires the following items:
(1) Petition fee; and
(2) One of the following reasons:
(a) Unpatentability of one or more claims, which must be accompanied by an unequivocal statement that one or more claims are unpatentable, an amendment to such claim or claims, and an explanation as to how the amendment causes such claim or claims to be patentable;
(b) Consideration of a request for continued examination in compliance with § 1.114 (for a utility or plant application only); or
(c) Express abandonment of the application. Such express abandonment may be in favor of a continuing application, but not a CPA under 37 CFR 1.53(d).

Petition Fee

☐ Applicant claims SMALL ENTITY status. See 37 CFR 1.27.

☐ Applicant is no longer claiming SMALL ENTITY status. See 37 CFR 1.27(g)(2).

☐ Applicant(s) status remains as SMALL ENTITY.

☒ Applicant(s) status remains as other than SMALL ENTITY

Reason for withdrawal from issue

○ One or more claims are unpatentable

◉ Consideration of a request for continued examination (RCE) (List of Required Documents and Fees)

○ Applicant hereby expressly abandons the instant application (any attorney/agent signing for this reason must have power of attorney pursuant to 37 CFR 1.32(b)).

RCE request,submission, and fee.

☐ I certify, in accordance with 37 CFR 1.4(d)(4) that : The RCE request ,submission, and fee have already been filed in the above-identified application on

☒ Are attached.

THIS PORTION MUST BE COMPLETED BY THE SIGNATORY OR SIGNATORIES

I certify, in accordance with 37 CFR 1.4(d)(4) that I am:

◉ An attorney or agent registered to practice before the Patent and Trademark Office who has been given power of attorney in this application.

○ An attorney or agent registered to practice before the Patent and Trademark Office, acting in a representative capacity.

○ A sole inventor

○ A joint inventor; I certify that I am authorized to sign this submission on behalf of all of the inventors

○ A joint inventor; all of whom are signing this e-petition

○ The assignee of record of the entire interest that has properly made itself of record pursuant to 37 CFR 3.71

Signature	/Scott A. Elchert/
Name	Scott A. Elchert
Registration Number	55149

UNITED STATES PATENT AND TRADEMARK OFFICE

UNITED STATES DEPARTMENT OF COMMERCE
United States Patent and Trademark Office
Address: COMMISSIONER FOR PATENTS
P.O. Box 1450
Alexandria, Virginia 22313-1450
www.uspto.gov

APPLICATION NO.	FILING DATE	FIRST NAMED INVENTOR	ATTORNEY DOCKET NO.	CONFIRMATION NO.
11/984,533	11/19/2007	Kazunari Aoyama	2392.1126	9014

21171 7590 03/11/2011
STAAS & HALSEY LLP
SUITE 700
1201 NEW YORK AVENUE, N.W.
WASHINGTON, DC 20005

EXAMINER

ART UNIT	PAPER NUMBER
2181	

MAIL DATE	DELIVERY MODE
03/11/2011	PAPER

Please find below and/or attached an Office communication concerning this application or proceeding.

The time period for reply, if any, is set in the attached communication.

UNITED STATES PATENT AND TRADEMARK OFFICE

Commissioner for Patents
United States Patent and Trademark Office
P.O. Box 1450
Alexandria, VA 22313-1450
www.uspto.gov

STAAS & HALSEY LLP
SUITE 700
1201 NEW YORK AVENUE, N.W.
WASHINGTON DC 20005

In re Application of: AOYAMA et al.
Application No. 11/984,533
Attorney Docket #: **2392.1126**
Filed: November 19, 2007
For: **DATA TRANSMISSION/RECEPTION SYSTEM**

DECISION ON REQUEST TO PARTICIPATE IN PATENT PROSECUTION HIGHWAY PROGRAM AND PETITION TO MAKE SPECIAL UNDER 37 CFR 1.102(a)

This is a decision on the request to participate in the Patent Prosecution Highway (PPH) program and the petition under 37 CFR 1.102(a), filed January 12, 2011 to make the above-identified application special.

The petition is **GRANTED.**

A grantable request to participate in the PPH program and petition to make special require:

(1) The U.S. application is
(a) a Paris Convention application which either
(i) validly claims priority under 35 U.S.C. 119(a) and 37 CFR 1.55 to one or more applications filed in the JPO, or
(ii) validly claims priority to a PCT application that contains no priority claims,

Or

(b) a national stage application under the PCT (an application which entered the national stage in the U.S. from a PCT international application after compliance with 35 U.S.C. 371), which PCT application
(i) validly claims priority to an application filed in the JPO, or
(ii) validly claims priority to a PCT application that contains no priority claims, or
(iii) contains no priority claim,

Or

(c) a so-called bypass application filed under 35 U.S.C. 111 (a) which validly claims benefit under 35 U.S.C. 120 to a PCT application, which PCT application
(i) validly claims priority to an application filed in the JPO, or

(ii) validly claims priority to a PCT application that contains no priority claims, or
(iii) contains no priority claim.

Where the JPO application that contains the allowable/patentable claims is not the same application for which priority is claimed in the U.S. application, applicant must identify the relationship between the JPO application that contains the allowable/patentable claims and the JPO priority application claimed in the U.S. application.

(2) Applicant must submit a copy of:
a. The allowable/patentable claim(s) from the JPO application(s) or if a copy of the allowable/patentable claims is available via the Dossier Access System (DAS) applicant may request the USPTO obtain a copy from the DAS, however if the USPTO is unable to obtain a copy from the DAS the applicant will be required to submit a copy;
b. An English translation of the allowable/patentable claim(s) and
c. A statement that the English translation is accurate;

Effective January 29, 2010, for a period of two years ending on January 28, 2012, the USPTO will accept claims written in dependent form in the U.S. application which are narrower in scope than the allowable/patentable claims in the Japanese application.

(3) Applicant must:
a. Ensure all the claims in the U.S. application must sufficiently correspond or be amended to sufficiently correspond to the allowable/patentable claim(s) in the JPO application(s) and
b. Submit a claims correspondence table in English;

(4) Examination of the U.S. application has not begun;

(5) Applicant must submit:
a. Documentation of prior office action:
i. a copy of the office action(s)just prior to the "Decision to Grant a Patent" from each of the JPO application(s) containing the allowable/patentable claim(s) or
ii. if the allowable/patentable claims(s) are from a "Notification of Reasons for Refusal" then the Notification of Reasons for Refusal or
iii. if the JPO application is a first action allowance then no office action from the JPO is necessary should be indicated on the request/petition form;

Further, if a copy of the documents from a above is available via the Dossier Access System (DAS) applicant may request the USPTO obtain a copy from the DAS, however if the USPTO is unable to obtain a copy from the DAS the applicant will be required to submit a copy;

b. An English language translation of the JPO Office action from (5)(a)(i)-(ii) above

c. A statement that the English translation is accurate;

Effective January 29, 2010, Applicants may submit a machine translation into the English language of the copy of the latest JPO office action just prior to the "Decision to Grant a Patent" (e.g., the latest "Notification of Reasons for Refusal") from each of the JPO application(s) containing the allowable/patentable claims that are the basis for the PPH request. The machine translation into the English language must be one that is provided by the JPO. That is, the machine translation into the English language cannot be one that is provided by a commercial service. Where a machine translation into the English language of the copy of the latest JPO office action (obtained from the JPO) is submitted, it will not be necessary to include a statement that the English translation is accurate.

(6) Applicant must submit:
   a. An IDS listing the documents cited by the JPO examiner in the JPO office action (unless already submitted in this application)
   b. Copies of the documents except U.S. patents or U.S. patent application publications (unless already submitted in this application);

The petition is **GRANTED.**

The request to participate in the PPH pilot program and petition are found to comply with the above requirements. Accordingly, the above-identified application has been accorded "special" status.

Telephone inquiries concerning this decision should be directed to Mano Padmanabhan at 571-272-4210.

All other inquiries concerning the examination or status of the application is accessible in the PAIR system at http://www.uspto.gov/ebc/index.html.

The application is being forwarded to the examiner for action on the merits commensurate with this decision.

/Mano Padmanabhan/

Mano Padmanabhan
Quality Assurance Specialist, Technology Center 2100, Workgroup 2180
571-272-4210

UNITED STATES PATENT AND TRADEMARK OFFICE

Commissioner for Patents
United States Patent and Trademark Office
P.O. Box 1450
Alexandria, VA 22313-1450
www.uspto.gov

ROSENBERG, KLEIN & LEE
SUITE 101
3458 ELLICOTT CENTER DRIVE
ELLICOTT CITY, MD 21043

MAILED
MAR 22 2011
OFFICE OF PETITIONS

In re Application of Lin	:	
Application No. 11/984,561	:	Letter
Filing Date: November 20, 2007	:	
Attorney Docket No. MR2707-232	:	

This is a notice regarding your request for acceptance of a fee deficiency submission under 37 CFR 1.28(c) filed October 22, 2010.

The deficiency payment of $285 is hereby accepted.

The change of status to large entity has been entered and made of record.

Telephone inquiries regarding this communication should be directed to Petitions Attorney Steven Brantley at (571) 272-3203.

Charles Steven Brantley
Senior Petitions Attorney
Office of Petitions

Doc Code: PET.RELIEF
Document Description: Certification and Request for Disaster Relief

PTO/SB/425 (03-11)

CERTIFICATION AND REQUEST FOR RELIEF DUE TO EVENTS OF MARCH 11, 2011, IN JAPAN (Page 1 of 2)

Nonprovisional Application Number or Control Number (if applicable): 11/984,721	Patent Number (if applicable):
First Named Inventor: Tomohiro FUNAKOSHI	Title of Invention: METHOD OF REVIEWING DEFECTS AND AN APPARATUS THEREON

APPLICANT/PATENTEE/REEXAMINATION PARTY HEREBY CERTIFIES AND REQUESTS THE FOLLOWING FOR THE ABOVE-IDENTIFIED APPLICATION/PATENT/REEXAMINATION PROCEEDING.

1. FOR PATENT APPLICATIONS AND REEXAMINATION PROCEEDINGS PENDING IN THE USPTO AS OF MARCH 11, 2011, IN WHICH A COMMUNICATION FROM THE USPTO IS SOUGHT TO BE REMAILED:

   a. One or more inventors, an assignee, or a correspondence address (for the application/proceeding) is in an area of Japan affected by the earthquake and/or tsunami of March 11, 2011.

   b. A reply or response to an Office action (final, non-final, or other), a notice of allowance, or other Office notice (hereinafter collectively referred to as "Office communication") is outstanding on March 11, 2011.

   c. The statutory or non-statutory time period set for response has not yet expired.

   d. Withdrawal and reissuance of the Office communication is requested.

   e. It is acknowledged that if this request is not made within sufficient time so that withdrawal and reissuance of the Office communication occur prior to expiration of the statutory or non-statutory time period (as permitted to be extended under 37 CFR 1.136(a), or as extended under 37 CFR 1.550(c) or 1.956), this request may not be granted.

   f. The need for the reissuance of the Office communication was due to the effects of the earthquake and/or tsunami of March 11, 2011.

   g. This request is being sent via EFS-Web or by mail directed to Mail Stop Petition, Commissioner for Patents, P.O. Box 1450, Alexandria, VA 22313-1450.

2. FOR PATENTEES WHO WERE UNABLE TO TIMELY PAY A PATENT MAINTENANCE FEE DURING THE SIX-MONTH GRACE PERIOD FOLLOWING THE WINDOW TO PAY THE MAINTENANCE FEE:

   a. The original window of time to pay the maintenance fee without the surcharge required by 37 CFR 1.20(h) expired on or after March 11, 2011.

   b. The delay in paying the fee was due to the effects of the earthquake and/or tsunami of March 11, 2011.

   c. The USPTO is requested to *sua sponte* waive the surcharge in 37 CFR 1.20(h) for paying a maintenance fee during the six-month grace period following the window to pay the maintenance fee.

   d. This request and payment of the maintenance fee during the six-month grace period following the window to pay the maintenance fee is being mailed to: Director of the United States Patent and Trademark Office, Attn: Maintenance Fee, 2051 Jamieson Avenue, Suite 300, Alexandria, VA 22314; or being transmitted via facsimile to: 571-273-6500.

CERTIFICATION AND REQUEST FOR RELIEF DUE TO EVENTS OF MARCH 11, 2011, IN JAPAN (Page 2 of 2)

3. FOR PATENTEES WHO NEED TO FILE A PETITION TO ACCEPT A DELAYED MAINTENANCE FEE PAYMENT UNDER 37 CFR 1.378(c):

   a. The maintenance fee payment was required to have been paid after March 10, 2011.

   b. A petition under 37 CFR 1.378(c) (using USPTO form PTO/SB/66 – Petition to Accept Unintentionally Delayed Payment of Maintenance Fee in an Expired Patent (37 CFR 1.378(c))) is being promptly filed accompanied by the applicable maintenance fee payment (but not the surcharge under 37 CFR 1.20(i)).

   c. The delay in payment of the maintenance fee was due to the effects of the earthquake and/or tsunami of March 11, 2011.

   d. The USPTO is requested to *sua sponte* waive the surcharge in 37 CFR 1.20(i) for accepting a delayed maintenance fee payment.

   e. It is acknowledged that the petition to accept a delayed maintenance fee payment under 37 CFR 1.378(c) must be filed by March 11, 2012, in order to be entitled to a waiver of the surcharge under 37 CFR 1.20(i).

   f. It is acknowledged that the petition to accept a delayed maintenance fee payment under 37 CFR 1.378(c) must be filed within twenty-four months from the expiration date of the patent. *See* 35 U.S.C 41(c).

   g. This request and the petition to accept a delayed maintenance fee payment under 37 CFR 1.378(c) is being submitted via EFS-Web or by mail directed to Mail Stop Petition, Commissioner for Patents, P.O. Box 1450, Alexandria, VA 22313-1450.

4. FOR NONPROVISIONAL PATENT APPLICATIONS FILED WITHOUT AN EXECUTED OATH OR DECLARATION OR PAYMENT OF THE BASIC FILING FEE, SEARCH FEE, AND/OR EXAMINATION FEE:

   a. The nonprovisional patent application was filed on or after March 11, 2011, and prior to April 12, 2011.

   b. The late filing of the oath or declaration or the basic filing fee, search fee, or examination fee was due to the effects of the earthquake and/or tsunami of March 11, 2011.

   c. The USPTO is requested to *sua sponte* waive the surcharge set forth in 37 CFR 1.16(f) for the late filing of the oath or declaration or basic filing fee, search fee, and/or examination fee.

   d. This request, together with the executed oath or declaration or the basic filing fee, search fee, or examination fee, as well as the reply to the Notice to File Missing Parts, is being submitted via EFS-Web or by mail directed to Mail Stop Missing Parts, Commissioner for Patents, P.O. Box 1450, Alexandria, VA 22313-1450.

Signature Keith E. George	Date June 8, 2011
Name (Print/Typed) Keith E. George	Practitioner Registration Number 34,111

Note: *Signatures of all the inventors, § 1.41(b) applicants, or assignees of record of the entire interest or their representative(s), or reexamination requesters at the appeal stage are required in accordance with 37 CFR 1.33 and 11.18. Please see 37 CFR 1.4(d) for the form of the signature. If necessary, submit multiple forms for more than one signature, see below*.*

☐ *Total of 1 forms are submitted.

UNITED STATES PATENT AND TRADEMARK OFFICE

Commissioner for Patents
United States Patent and Trademark Office
P.O. Box 1450
Alexandria, VA 22313-1450
www.uspto.gov

MCDERMOTT WILL & EMERY LLP
600 13TH STREET, N.W.
WASHINGTON DC 20005-3096

MAILED
JUN 14 2011
OFFICE OF PETITIONS

In re Application of	:	
Tomohiro Funakoshi	:	
Application No. 11/984,721	:	DECISION ON PETITION
Filed: November 21, 2007	:	
Attorney Docket No. 062807-0487	:	

This is a decision on the request filed June 8, 2011, seeking relief under the provisions of "Relief Available to Patent and Trademark Applicants, Patentees and Trademark Owners Affected by the Catastrophic Events of March 11, 2011 in Japan," 1365 Off. Gaz. Pat. Office 170 (April 19, 2011).

The request for relief is **GRANTED**.

In the above-identified application, an Office action was mailed on February 18, 2011. The instant petition was filed prior to the expiration of the period for reply and the certifications for granting of relief are considered to be met by the submission of the request.

Telephone inquires concerning this decision should be directed to the undersigned at 571-272-7751. All other inquires concerning either the examination or status of the application should be directed to the Technology Center.

This application is being referred to the Technology Center, Art Unit 2624 for re-mailing the Office action of February 18, 2011. The period for reply will run from the mailing date of the Office action.

/Joan Olszewski/
Joan Olszewski
Petitions Examiner
Office of Petitions

SPE RESPONSE FOR CERTIFICATE OF CORRECTION

Paper No.: _____

DATE : 05/9/11

TO SPE OF : ART UNIT 2886

SUBJECT : Request for Certificate of Correction for Appl. No 11/984819 7839494B2

Please respond to this request for a certificate of correction within 7 days.

FOR IFW FILES:

Please review the requested changes/corrections as shown in the **COCIN** document(s) in the IFW application image. No new matter should be introduced, nor should the scope or meaning of the claims be changed.

Please complete the response (see below) and forward the completed response to scanning using document code **COCX**.

FOR PAPER FILES:

Please review the requested changes/corrections as shown in the attached certificate of correction. Please complete this form (see below) and forward it with the file to:

Certificates of Correction Branch (CofC)

Should the change(s) Be made?

RoChaun Johnson
Certificates of Correction Branch
571 272-0470

Thank You For Your Assistance

The request for issuing the above-identified correction(s) is hereby:
Note your decision on the appropriate box.

- ☑ **Approved** — **All** changes apply.
- ☐ **Approved in Part** — Specify below which changes **do not** apply.
- ☐ **Denied** — State the reasons for denial below.

Comments: _____

SPE

2886
Art Unit

SPE RESPONSE FOR CERTIFICATE OF CORRECTION

DATE : 9/7/2011

TO SPE OF : ART UNIT 2872

SUBJECT : Request for Certificate of Correction for Appl. No.: 11/984820 Patent No.: 7978404 B2

CofC mailroom date: 8/12/2011

Please respond to this request for a certificate of correction within 7 days.

FOR IFW FILES:

Please review the requested changes/corrections as shown in the **COCIN** document(s) in the IFW application image. No new matter should be introduced, nor should the scope or meaning of the claims be changed.

Please complete the response (see below) and forward the completed response to scanning using document code **COCX**.

FOR PAPER FILES:

Please review the requested changes/corrections as shown in the attached certificate of correction. Please complete this form (see below) and forward it with the file to:

Certificates of Correction Branch (CofC)
Randolph Square – 9D10-A
Palm Location 7580

Note: item 30 - title page

Virginia Tolbert
Certificates of Correction Branch
(571) 272-0460

Thank You For Your Assistance

The request for issuing the above-identified correction(s) is hereby:
Note your decision on the appropriate box.

- ☒ **Approved** — **All** changes apply.
- ☐ **Approved in Part** — Specify below which changes **do not** apply.
- ☐ **Denied** — State the reasons for denial below.

Comments: Please enter the request for corrections

Stephone B. Allen
Supervisory Patent Examiner

Stephone Allen
SPE

2872
Art Unit

UNITED STATES PATENT AND TRADEMARK OFFICE

Commissioner for Patents
United States Patent and Trademark Office
P.O. Box 1450
Alexandria, VA 22313-1450
www.uspto.gov

MCGINN INTELLECTUAL PROPERTY LAW GROUP, PLLC
8321 OLD COURTHOUSE ROAD
SUITE 200
VIENNA VA 22182-3817

MAILED

APR 08 2011

OFFICE OF PETITIONS

In re Application of	:	
Makoto Yoshida	:	
Application No. 11/984,840	:	DECISION GRANTING PETITION
Filed: November 21, 2007	:	UNDER 37 CFR 1.313(c)(2)
Attorney Docket No. SH-0115US	:	

This is a decision on the petition under 37 CFR 1.313(c)(2), filed April 6, 2011, to withdraw the above-identified application from issue after payment of the issue fee.

The petition is **GRANTED**.

The above-identified application is withdrawn from issue for consideration of a submission under 37 CFR 1.114 (request for continued examination). *See* 37 CFR 1.313(c)(2).

Petitioner is advised that the issue fee paid on March 11, 2011 cannot be refunded. If, however, this application is again allowed, petitioner may request that it be applied towards the issue fee required by the new Notice of Allowance.[1]

Telephone inquiries should be directed to the undersigned at (571) 272-3208.

This application is being referred to Technology Center AU 1741 for processing of the request for continued examination under 37 CFR 1.114 and for consideration of the concurrently filed IDS.

/Karen Creasy/
Karen Creasy
Petitions Examiner
Office of Petitions

[1] *The request to apply the issue fee to the new Notice may be satisfied by completing and returning the new Part B – Fee(s) Transmittal Form (along with any balance due at the time of submission). Petitioner is advised that the Issue Fee Transmittal Form* ***must*** *be completed and timely submitted to avoid abandonment of the application.*

UNITED STATES PATENT AND TRADEMARK OFFICE

Commissioner for Patents
United States Patent and Trademark Office
P.O. Box 1450
Alexandria, VA 22313-1450
www.uspto.gov

OLIFF & BERRIDGE, PLC
P.O. BOX 320850
ALEXANDRIA, VA 22320-4850

MAILED
SEP 16 2010
OFFICE OF PETITIONS

In re Application of
Takashi Hirabayashi
Application No.: 11/984,879
Filed: November 23, 2007
Attorney Docket No.: 134706

ON PETITION

This is a decision on the petition, filed September 15, 2010, under 37 CFR 1.313(c)(2) to withdraw the above-identified application from issue after payment of the issue fee.

The petition is **GRANTED**.

The above-identified application is withdrawn from issue for consideration of a submission under 37 CFR 1.114 (request for continued examination). See 37 CFR 1.313(c)(2).

Petitioner is advised that the issue fee paid on August 23, 2010, cannot be refunded. If, however, this application is again allowed, petitioner may request that it be applied towards the issue fee required by the new Notice of Allowance.[1]

Telephone inquiries relating to this decision should be directed to the undersigned at (571) 272-3204.

The application is being referred to Technology Center AU 2834 for further processing of the Request for Continued Examination (RCE) under 37 CFR 1.114 and for consideration of the concurrently filed Information Disclosure Statement (IDS).

/SDB/

Sherry D. Brinkley
Petitions Examiner
Office of Petitions

[1] *The request to apply the issue fee to the new Notice may be satisfied by completing and returning the new Part B - Fee(s) Transmittal Form (along with any balance due at the time of submission). Petitioner is advised that the Issue Fee Transmittal Form must be completed and timely submitted to avoid abandonment of the application.*

UNITED STATES PATENT AND TRADEMARK OFFICE

Commissioner for Patents
United States Patent and Trademark Office
P.O. Box 1450
Alexandria, VA 22313-1450
www.uspto.gov

MAILED

OCT 01 2010

OFFICE OF PETITIONS

ARENT FOX LLP
1050 CONNECTICUT AVENUE, N.W.
SUITE 400
WASHINGTON, DC 20036

In re Application of :
Yasurou Matsuzaki et al :
Application No. 11/984,932 : ON PETITION
Filed: November 26, 2007 :
Attorney Docket No. 100353-00303

This is a decision on the petition, filed October 1, 2010 under 37 CFR 1.313(c)(2) to withdraw the above-identified application from issue after payment of the issue fee.

The petition is **GRANTED**.

The above-identified application is withdrawn from issue for consideration of a submission under 37 CFR 1.114 (request for continued examination). See 37 CFR 1.313(c)(2).

Petitioner is advised that the issue fee paid on August 27, 2010 in the above-identified application cannot be refunded. If, however, the above-identified application is again allowed, petitioner may request that it be applied towards the issue fee required by the new Notice of Allowance.[1]

Telephone inquiries should be directed to Irvin Dingle at (571) 272-3210.

This matter is being referred to Technology Center AU 2827 for processing of the request for continued examination under 37 CFR 1.114 and for consideration of the concurrently filed Information Disclosure Statement.

/Irvin Dingle/
Irvin Dingle
Petitions Examiner
Office of Petitions

---

[1] The request to apply the issue fee to the new Notice may be satisfied by completing and returning the new Issue Fee Transmittal Form PTOL-85(b), which includes the following language thereon: Commissioner for Patents is requested to apply the Issue Fee and Publication Fee (if any) or re-apply any previously paid issue fee to the application identified above. Petitioner is advised that, whether a fee is indicated as being due or not, the Issue Fee Transmittal Form **must** be completed and timely submitted to avoid abandonment. Note the language in bold text on the first page of the Notice of Allowance and Fee(s) Due (PTOL-85).

UNITED STATES PATENT AND TRADEMARK OFFICE

Commissioner for Patents
United States Patent and Trademark Office
P.O. Box 1450
Alexandria, VA 22313-1450
www.uspto.gov

OLIFF & BERRIDGE, PLC
P.O. BOX 320850
ALEXANDRIA, VA 22320-4850

MAILED

OCT 25 2010

OFFICE OF PETITIONS

In re Application of	:	
Michael BINNARD	:	
Application No. 11/984,980	:	DECISION GRANTING PETITION
Filed: November 26, 2007	:	UNDER 37 CFR 1.313(c)(2)
Attorney Docket No. **123691.07**	:	

This is a decision on the petition under 37 CFR 1.313(c)(2), filed October 19, 2010, to withdraw the above-identified application from issue after payment of the issue fee.

The petition is **GRANTED**.

The above-identified application is withdrawn from issue for consideration of a submission under 37 CFR 1.114 (request for continued examination). *See* 37 CFR 1.313(c)(2).

Petitioner is advised that the issue fee paid on October 14, 2010 cannot be refunded. If, however, this application is again allowed, petitioner may request that it be applied towards the issue fee required by the new Notice of Allowance.[1]

Telephone inquiries should be directed to the undersigned at (571) 272-7253.

This application is being referred to Technology Center AU 2882 for processing of the request for continued examination under 37 CFR 1.114 and for consideration of the concurrently filed information disclosure statement.

/Monica A. Graves/
Petitions Examiner, Office of Petitions

---

[1] *The request to apply the issue fee to the new Notice may be satisfied by completing and returning the new Part B – Fee(s) Transmittal Form (along with any balance due at the time of submission). Petitioner is advised that the Issue Fee Transmittal Form must be completed and timely submitted to avoid abandonment of the application.*

UNITED STATES PATENT AND TRADEMARK OFFICE

Commissioner for Patents
United States Patent and Trademark Office
P.O. Box 1450
Alexandria, VA 22313-1450
www.uspto.gov

OLIFF & BERRIDGE, PLC
P.O. BOX 320850
ALEXANDRIA, VA 22320-4850

MAILED
MAR 10 2011
OFFICE OF PETITIONS

In re Application of :
Michael BINNARD :
Application No. 11/984,980 : DECISION GRANTING PETITION
Filed: November 26, 2007 : UNDER 37 CFR 1.313(c)(2)
Attorney Docket No. **123691.07** :

This is a decision on the petition under 37 CFR 1.313(c)(2), filed March 10, 2011, to withdraw the above-identified application from issue after payment of the issue fee.

The petition is **GRANTED**.

The above-identified application is withdrawn from issue for consideration of a submission under 37 CFR 1.114 (request for continued examination). *See* 37 CFR 1.313(c)(2).

Petitioner is advised that the issue fee paid on February 9, 2011 cannot be refunded. If, however, this application is again allowed, petitioner may request that it be applied towards the issue fee required by the new Notice of Allowance.[1]

Telephone inquiries should be directed to the undersigned at (571) 272-7253.

This application is being referred to Technology Center AU 2882 for processing of the request for continued examination under 37 CFR 1.114 and for consideration of the concurrently filed information disclosure statement.

/Monica A. Graves/
Petitions Examiner, Office of Petitions

[1] *The request to apply the issue fee to the new Notice may be satisfied by completing and returning the new Part B – Fee(s) Transmittal Form (along with any balance due at the time of submission). Petitioner is advised that the Issue Fee Transmittal Form* ***must*** *be completed and timely submitted to avoid abandonment of the application.*

Doc Code: PET.AUTO Document Description: Petition automatically granted by EFS-Web	PTO/SB/140 U.S. Patent and Trademark Office Department of Commerce

Electronic Petition Request	**PETITION TO WITHDRAW AN APPLICATION FROM ISSUE AFTER PAYMENT OF THE ISSUE FEE UNDER 37 CFR 1.313(c)**
Application Number	11984980
Filing Date	26-Nov-2007
First Named Inventor	Michael Binnard
Art Unit	2882
Examiner Name	COLIN KREUTZER
Attorney Docket Number	123691.07
Title	APPARATUS AND METHOD FOR MAINTAINING IMMERSION FLUID IN THE GAP UNDER THE PROJECTION LENS DURING WAFER EXCHANGE IN AN IMMERSION LITHOGRAPHY MACHINE

An application may be withdrawn from issue for further action upon petition by the applicant. To request that the Office withdraw an application from issue, applicant must file a petition under this section including the fee set forth in § 1.17(h) and a showing of good and sufficient reasons why withdrawal of the application from issue is necessary.

APPLICANT HEREBY PETITIONS TO WITHDRAW THIS APPLICATION FROM ISSUE UNDER 37 CFR 1.313(c).

A grantable petition requires the following items:
(1) Petition fee; and
(2) One of the following reasons:
(a) Unpatentability of one or more claims, which must be accompanied by an unequivocal statement that one or more claims are unpatentable, an amendment to such claim or claims, and an explanation as to how the amendment causes such claim or claims to be patentable;
(b) Consideration of a request for continued examination in compliance with § 1.114 (for a utility or plant application only); or
(c) Express abandonment of the application. Such express abandonment may be in favor of a continuing application, but not a CPA under 37 CFR 1.53(d).

Petition Fee

☐ Applicant claims SMALL ENTITY status. See 37 CFR 1.27.

☐ Applicant is no longer claiming SMALL ENTITY status. See 37 CFR 1.27(g)(2).

☐ Applicant(s) status remains as SMALL ENTITY.

☒ Applicant(s) status remains as other than SMALL ENTITY

Reason for withdrawal from issue

○ One or more claims are unpatentable

◉ Consideration of a request for continued examination (RCE) (List of Required Documents and Fees)

○ Applicant hereby expressly abandons the instant application (any attorney/agent signing for this reason must have power of attorney pursuant to 37 CFR 1.32(b)).

RCE request,submission, and fee.

☐ I certify, in accordance with 37 CFR 1.4(d)(4) that : The RCE request ,submission, and fee have already been filed in the above-identified application on

☒ Are attached.

THIS PORTION MUST BE COMPLETED BY THE SIGNATORY OR SIGNATORIES

I certify, in accordance with 37 CFR 1.4(d)(4) that I am:

◉ An attorney or agent registered to practice before the Patent and Trademark Office who has been given power of attorney in this application.

○ An attorney or agent registered to practice before the Patent and Trademark Office, acting in a representative capacity.

○ A sole inventor

○ A joint inventor; I certify that I am authorized to sign this submission on behalf of all of the inventors

○ A joint inventor; all of whom are signing this e-petition

○ The assignee of record of the entire interest that has properly made itself of record pursuant to 37 CFR 3.71

Signature	/Mario Costantino/
Name	Mario A. Costantino
Registration Number	33565

UNITED STATES PATENT AND TRADEMARK OFFICE

Commissioner for Patents
United States Patent and Trademark Office
P.O. Box 1450
Alexandria, VA 22313-1450
www.uspto.gov

Decision Date : June 9,2011

In re Application of :

Michael Binnard

DECISION ON PETITION

UNDER CFR 1.313(c)(2)

Application No : 11984980

Filed : 26-Nov-2007

Attorney Docket No : 123691.07

This is an electronic decision on the petition under 37 CFR 1.313(c)(2), filed June 9,2011 , to withdraw the above-identified application from issue after payment of the issue fee.

The petition is **GRANTED.**

The above-identified application is withdrawn from issue for consideration of a submission under 37 CFR 1.114 (request for continued examination). See 37 CFR 1.313(c)(2).

Petitioner is advised that the issue fee paid in this application cannot be refunded. If, however, this application is again allowed, petitioner may request that it be applied towards the issue fee required by the new Notice of Allowance.

Telephone inquiries concerning this decision should be directed to the Patent Electronic Business Center (EBC) at 866-217-9197.

This application file is being referred to Technology Center AU 2882 for processing of the request for continuing examination under 37 CFR 1.114 .

Office of Petitions

UNITED STATES PATENT AND TRADEMARK OFFICE

Commissioner for Patents
United States Patent and Trademark Office
P.O. Box 1450
Alexandria, VA 22313-1450
www.uspto.gov

ROSENBERG, KLEIN & LEE
3458 ELLICOTT CENTER DRIVE, SUITE 101
ELLICOTT CITY MD 21043

MAILED

AUG 16 2010

OFFICE OF PETITIONS

ON PETITION

In re Application of :
Chih Kuo HU :
Application No. 11/985,000 :
Filed: November 26, 2007 :
Attorney Docket No. MR1683-910 :

This is a decision on the petition, filed May 10, 2010, which is requesting that the requirement be waived or suspended pursuant to 37 CFR 1.183.

The petition is **DISMISSED.**

The application became abandoned for failure to reply in a timely manner to the Notice to File Missing Parts of Nonprovisional Application (Notice), mailed February 6, 2008. The Notice set a period for reply of **two (2) months** from the mail date of the Notice. No extensions of time under the provisions of 37 CFR 1.136(a) were obtained. Accordingly, the application became abandoned on April 7, 2008. A Notice of Abandonment was mailed October 10, 2008.

The petition in the above-identified application was not accompanied by payment of the required fee. No consideration on the merits can be given that petition until the required fee is received.

Telephone inquiries regarding this communication should be directed to Diane Goodwyn at (571) 272-6735.

Thurman K. Page
Petitions Examiner
Office of Petitions

UNITED STATES PATENT AND TRADEMARK OFFICE

Commissioner for Patents
United States Patent and Trademark Office
P.O. Box 1450
Alexandria, VA 22313-1450
www.uspto.gov

DELPHINE M. JAMES
2656 SOUTH LOOP WEST #170
HOUSTON, TX 77054

MAILED
JAN 04 2011
OFFICE OF PETITIONS

In re Application of Taylor :
Application No. 11/985,008 :
Filing Date: November 13, 2007 :
For: Decorative Rim :

Decision on Petition

This is a decision on the petition under 37 CFR 1.137(b) filed August 3, 2010, which requests revival of the application.

The petition is **dismissed**.

Any request for reconsideration of the petition to withdraw the holding of abandonment must be submitted within **TWO (2) MONTHS** from the mail date of this decision. Extensions of time under 37 CFR 1.136(a) are permitted. The reconsideration request should include a cover letter entitled "Renewed Petition under 37 CFR 1.137(b)."

Background

The application was filed November 13, 2007.

On December 13, 2007, the Office issued a Notice to File Missing Parts of Nonprovisional Application setting forth a two-month extendable time period for reply. The Notice required:

(1) Payment of $15 to complete the examination fee,
(2) Payment of a $65 surcharge,
(3) Submission of an executed oath or declaration, and
(4) Submission of replacement drawings.

The papers filed November 13, 2007, did not include any mailing address. Therefore, the December 13, 2007 Notice was not actually mailed. However, the Notice was effective as of December 13, 2007, and the time period to reply to the Notice began on December 13, 2007.

On April 7, 2008, petitioner submitted a copy of a declaration from a prior provisional application. The papers filed April 7, 2008, did not include an extension of time fee, the $15 owed for the examination fee, the $65 surcharge, or replacement drawings. Since an extension of time was not submitted, the reply was untimely.

On April 22, 2008, the Office mailed a Notice of Incomplete Reply stating the Office still needed $15 for the examination fee, a $65 surcharge, and replacement drawings. The Notice stated the time period set forth in the prior December 13, 2007 Notice continued to run.

On June 13, 2008, petitioner submitted the $15 still owed for the examination, the $65 surcharge, and new drawings. The submission did not include payment for an extension of time. Therefore, the reply was untimely and improper. The reply was untimely because the reply did not include payment for an extension of time. The reply was improper because deficiencies in the drawings.

On June 24, 2008, the Office mailed a Notice identifying deficiencies in the drawings filed June 13, 2008, and requiring the submission of new replacement drawings.

The period for reply to the December 13, 2007 Notice could have been extended up to Monday, July 14, 2007, with payment for a five-month extension of time ($1,115). However, a request for an extension of time was not filed.

Absent payment for an extension of time, a reply to the December 13, 2007, was due on or before February 13, 2008. As previously discussed, an extension of time to file a reply was not obtained. Therefore, the application became abandoned on February 14, 2008.

The Office mailed a Notice of Abandonment on August 25, 2008.

A petition under 37 CFR 1.181 to withdraw the holding of abandonment was filed October 27, 2008.

A decision dismissing the petition was issued March 19, 2009.

The instant petition was filed August 3, 2010.

Discussion

A grantable petition under 37 CFR 1.137(b) must be accompanied by:

(1) The reply required to the outstanding Office action or notice, unless previously filed,
(2) The petition fee,
(3) A statement that the entire delay in filing the required reply from the due date for the reply until the filing of a grantable petition pursuant to 37 CFR 1.137(b) was unintentional, and
(4) A terminal disclaimer and fee if the application was filed on or before June 8, 1995 or if the application is a design application.

The instant petition lacks items (1) and (3).

As to item (1), the petition is not accompanied by proper replacement drawings or a proper oath or declaration.

As to item (3), the petition fails to state the entire delay in filing the required reply from the due date for the reply until the filing of a grantable petition pursuant to 37 CFR 1.137(b) was unintentional.

The Petition is Not Accompanied by Proper Replacement Drawings

The March 19, 2009 decision stated,

> The Office notes the December 13, 2007 Notice, the April 22, 2008 Notice, and the June 24, 2008 Notice, indicated replacement drawings were needed for two reasons. The Notices stated, with emphasis added,
>
> - The drawings must be reasonably free from erasures and must be free from alterations, overwriting, interlineations, folds, and copy marks. **See Figure(s) All.**
> - The drawings submitted to the Office are not electronically reproducible because portions of figures 2, 6, 7 are missing and/or blurry.
>
> Each set of replacement drawings filed by Complainant have incorrectly omitted replacement drawings for every figure except figures 2, 6, and 7. Any future petition should be accompanied by a complete and proper set of replacement drawings. Petitioner should also ensure the replacement drawings for figures 2, 6, and 7 in the new set of drawings are complete and not blurry.

As stated in the prior decision and the three notices cited in the decision, *all* the drawing figures were problematic because they were not "reasonably free from erasures [and/or] free from alterations, overwriting, interlineations, folds, [and/or] copy marks." The replacement drawings filed with the instant petition do not appear to include any attempt to correct this problem for all the drawing figures. For example, Figure 1 filed with the petition appears to be almost identical to Figure 1 filed with the original application papers.

A review of the replacement drawings filed with the instant petition indicates the replacement drawings appear to include errors that were not present when the drawings were originally filed. Such errors include, *but are not limited to*:

1. Three of the seven lead lines in Figure 3 fail to include reference characters,
2. One of the reference characters in Figure 2 is illegible, and
3. Figure 7 includes a stray mark which was not present earlier.

A copy of Figure 7 with the stray mark clearly circled is attached.

Any request for reconsideration should include an entire set of replacement drawings. Petitioner should ensure:

1. Every drawing sheet is:
   - A. Reasonably free from erasures,
   - B. Free from overwriting, and
   - C. Free from copy marks,

2. Every drawing sheet does not omit any material such as reference characters,
3. All reference characters on the drawings are legible,
4. Every drawing sheet is free from stray marks, and
5. The drawings comply with all the requirements set forth in 37 C.F.R. § 1.84 which are not set forth above.

The Petition is Not Accompanied by a Proper Declaration

The prior decision stated, with emphasis added,

> When issuing both Notices of Incomplete Application, Office employees failed to note the declaration filed April 7, 2008, is improper because it is a copy of a declaration from a prior provisional application. A copy of an executed declaration from a *nonprovisional* application can be submitted as an acceptable declaration in a new application in certain circumstances. See 37 CFR 1.63(d). However, a copy of an executed declaration from a *provisional* application cannot be submitted as an acceptable declaration in a new application. *Any request for reconsideration or petition under 37 CFR 1.137 filed in response to the instant petition should include a properly executed declaration.*

The instant petition is not accompanied by an oath or declaration. However, as set forth in the quoted language above, the declaration filed April 7, 2008, was improper. Any request for reconsideration must include a proper oath or declaration.

The Petition Does Not Include the Statement Required Under 37 CFR 1.137(b)(3)

The petition explicitly recognizes a grantable petition must state the entire delay in filing the required reply from the due date for the reply until the filing of a grantable petition pursuant to 37 CFR 1.137(b) was unintentional. However, the petition does not actually include the required statement. Therefore, the petition cannot be granted. Any request for reconsideration must include the required statement.

Further correspondence with respect to this matter should be addressed as follows:

By mail: Mail Stop Petition
Commissioner for Patents
P.O. Box 1450
Alexandria, VA 22313-1450

By facsimile: (571) 273-8300
Attn: Office of Petitions

By hand: U.S. Patent and Trademark Office
Customer Service Window
Randolph Building
401 Dulany Street
Alexandria, VA 22314

Telephone inquiries regarding this communication should be directed to Petitions Attorney Steven Brantley at (571) 272-3203.

Charles Steven Brantley
Senior Petitions Attorney
Office of Petitions

Attached: Copy of Figure 7 as notated by the Office

Replacement Sheet

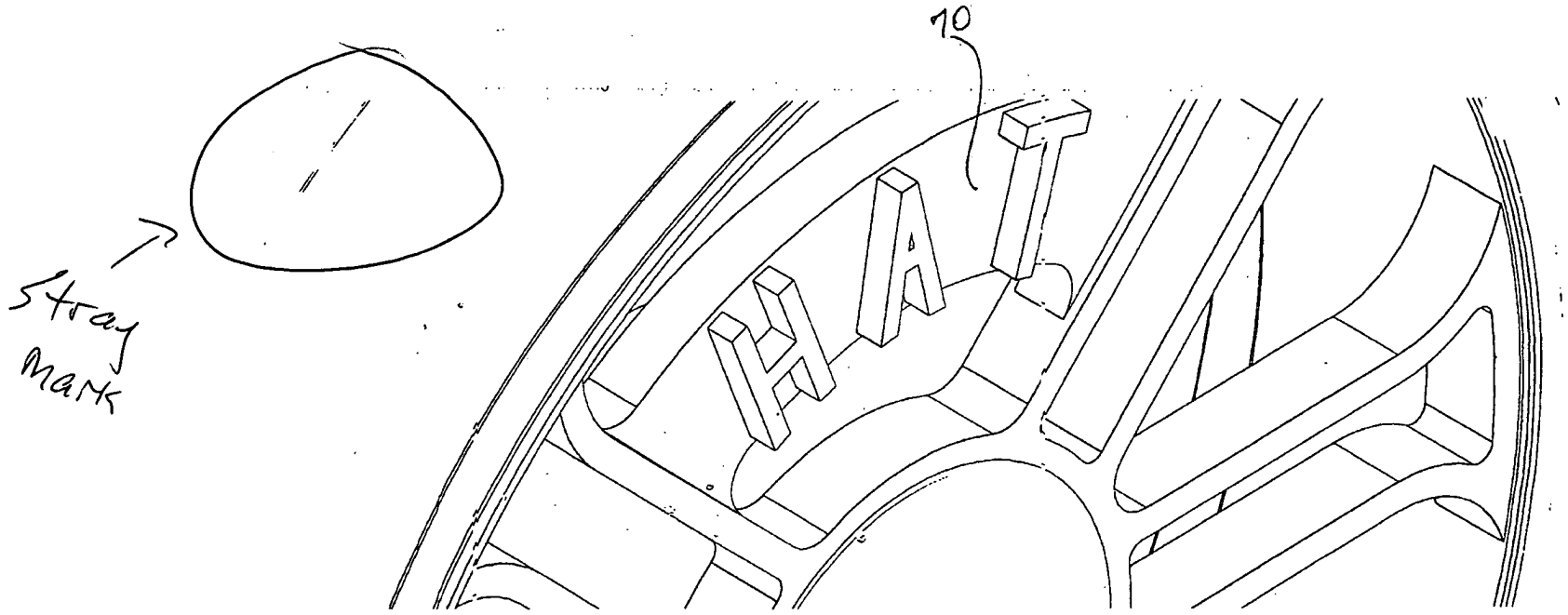

Figure 7

UNITED STATES PATENT AND TRADEMARK OFFICE

Commissioner for Patents
United States Patent and Trademark Office
P.O. Box 1450
Alexandria, VA 22313-1450
www.uspto.gov

MAILED
APR 21 2011
OFFICE OF PETITIONS

DELPHINE M. JAMES
2656 SOUTH LOOP WEST #170
HOUSTON, TX 77054

In re Application of Taylor :
Application No. 11/985,008 : Decision on Petition
Filing Date: November 13, 2007 :
For: Decorative Rim :

This is a decision on the petition under 37 CFR 1.137(b) filed March 5, 2011, which requests revival of the application.

The petition is **dismissed**.

Any request for reconsideration of the petition to withdraw the holding of abandonment must be submitted within **TWO (2) MONTHS** from the mail date of this decision. Extensions of time under 37 CFR 1.136(a) are permitted. The reconsideration request should include a cover letter entitled "Renewed Petition under 37 CFR 1.137(b)."

Background

The application was filed November 13, 2007.

On December 13, 2007, the Office issued a Notice to File Missing Parts of Nonprovisional Application setting forth a two-month extendable time period for reply. The Notice required:

(1) Payment of $15 to complete the examination fee,
(2) Payment of a $65 surcharge,
(3) Submission of an executed oath or declaration, and
(4) Submission of replacement drawings.

The papers filed November 13, 2007, did not include any mailing address. Therefore, the December 13, 2007 Notice was not actually mailed. However, the Notice was effective as of December 13, 2007, and the time period to reply to the Notice began on December 13, 2007.

On April 7, 2008, petitioner submitted a copy of a declaration from a prior provisional application. The papers filed April 7, 2008, did not include an extension of time fee, the $15 owed for the examination fee, the $65 surcharge, or replacement drawings. Since an extension of time was not submitted, the reply was untimely.

On April 22, 2008, the Office mailed a Notice of Incomplete Reply stating the Office still needed $15 for the examination fee, a $65 surcharge, and replacement drawings. The Notice stated the time period set forth in the prior December 13, 2007 Notice continued to run.

On June 13, 2008, petitioner submitted the $15 still owed for the examination, the $65 surcharge, and new drawings. The submission did not include payment for an extension of time. Therefore, the reply was untimely and improper. The reply was untimely because the reply did not include payment for an extension of time. The reply was improper because deficiencies in the drawings.

On June 24, 2008, the Office mailed a Notice identifying deficiencies in the drawings filed June 13, 2008, and requiring the submission of new replacement drawings.

The period for reply to the December 13, 2007 Notice could have been extended up to Monday, July 14, 2007, with payment for a five-month extension of time ($1,115). However, a request for an extension of time was not filed.

Absent payment for an extension of time, a reply to the December 13, 2007, was due on or before February 13, 2008. As previously discussed, an extension of time to file a reply was not obtained. Therefore, the application became abandoned on February 14, 2008.

The Office mailed a Notice of Abandonment on August 25, 2008.

A petition under 37 CFR 1.181 to withdraw the holding of abandonment was filed October 27, 2008.

A decision dismissing the October 27, 2008 petition was issued March 19, 2009.

A petition under 37 CFR 1.137(b) was filed August 3, 2010.

A decision dismissing the August 3, 2010 petition was mailed January 4, 2011.

The instant petition was filed March 5, 2011.

Discussion

A grantable petition under 37 CFR 1.137(b) must be accompanied by:

(1) The reply required to the outstanding Office action or notice, unless previously filed;
(2) The petition fee,
(3) A statement that the entire delay in filing the required reply from the due date for the reply until the filing of a grantable petition pursuant to 37 CFR 1.137(b) was unintentional, and
(4) A terminal disclaimer and fee if the application was filed on or before June 8, 1995 or if the application is a design application.

The instant petition lacks items (1) and (3).

As to item (1), the petition is not accompanied by proper replacement drawings or a proper oath or declaration.

As to item (3), the petition fails to state the entire delay in filing the required reply from the due date for the reply until the filing of a grantable petition pursuant to 37 CFR 1.137(b) was unintentional.

The Petition is not Accompanied by Proper Replacement Drawings

The quality of the drawings filed with the instant petition is substantially greater than the quality of the original drawings. Unfortunately, the replacement drawings are clearly inadequate as a result of a single sheet of drawings.

The original drawings included Figures 1-7. The replacement drawings filed with the instant petition include seven sheets of drawings containing Figures 1-7 and a drawing sheet containing a Figure 8 and a Figure 8a. The specification does not include a reference to Figures 8 and 8a and the subject matter of Figures 8 and 8a appears to be unrelated to the content of the specification. A copy of the drawing sheet containing Figures 8 and 8a is attached to this decision.

In view of the fact the replacement drawings filed with the instant petition include two new drawing figures, both of which appear to pertain to subject matter unrelated to the instant application, the replacement drawings are clearly improper and will not be accepted.

The Petition Does Not Include the Statement Required Under 37 CFR 1.137(b)(3)

The petition explicitly recognizes a grantable petition must state the entire delay in filing the required reply from the due date for the reply until the filing of a grantable petition pursuant to 37 CFR 1.137(b) was unintentional. However, the petition does not actually include the required statement. Instead, the petition states, "The entire delay in filing the required reply form the due date from the reply was unintentional."

Steps That Need to be taken to Revive the Application

Any request for reconsideration should include acceptable drawings. If a copy of Figures 1-7, but not Figures 8 and 8a, are filed with the request for reconsideration, the drawings will be acceptable. After a decision granting the request for reconsideration is mailed, the Office of Patent Application Processing ("OPAP") will be informed of the decision. If OPAP reviews the drawings and determines the drawings are insufficient, OPAP will mail a Notice to File Corrected Application Papers requiring the submission of new drawings.

Any request for reconsideration should explicitly state, "The entire delay in filing the required reply from the due date for the reply until the filing of a grantable petition pursuant to 37 CFR 1.137(b) was unintentional."

Further correspondence with respect to this matter should be addressed as follows:

By mail: Mail Stop Petition
Commissioner for Patents
P.O. Box 1450
Alexandria, VA 22313-1450

By facsimile: (571) 273-8300
Attn: Office of Petitions

By hand: U.S. Patent and Trademark Office
Customer Service Window
Randolph Building
401 Dulany Street
Alexandria, VA 22314

Telephone inquiries regarding this communication should be directed to Petitions Attorney Steven Brantley at (571) 272-3203.

Charles Steven Brantley
Senior Petitions Attorney
Office of Petitions

Attachment: Copy of drawing sheet with Figures 8 and 8a filed March 5, 2011

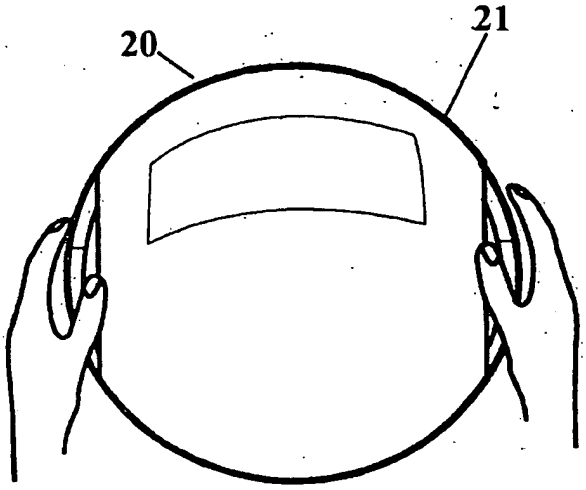

Figure 8

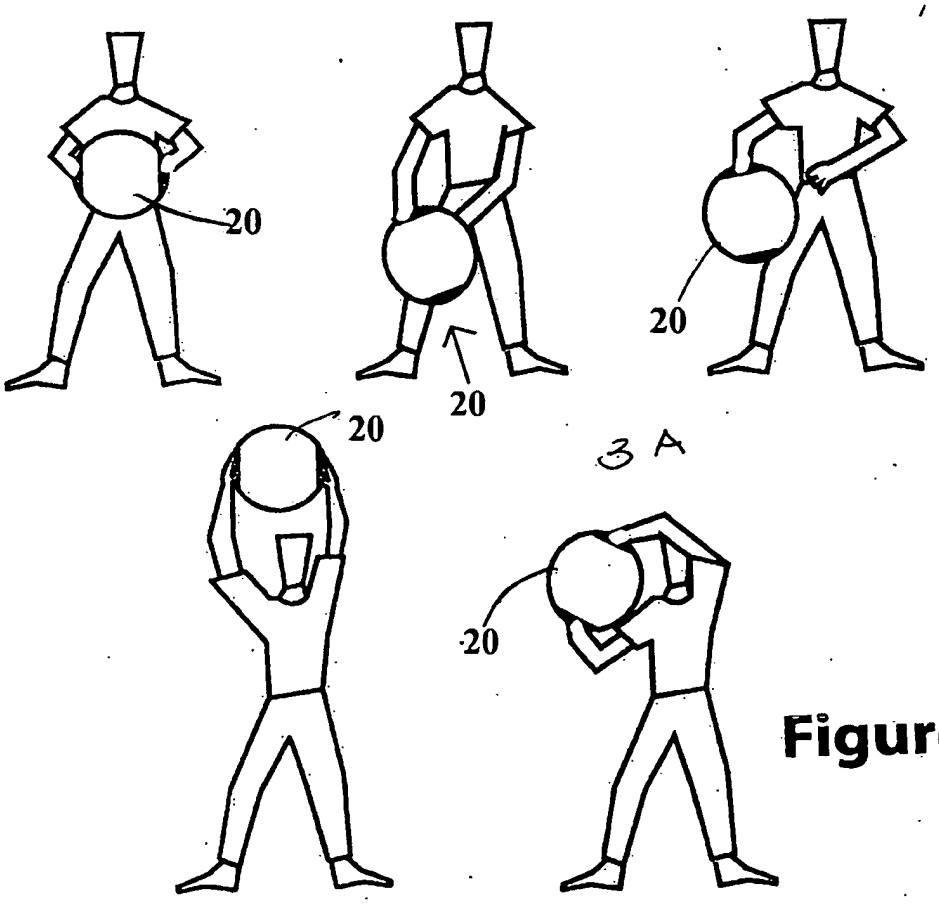

Figure 8a

UNITED STATES PATENT AND TRADEMARK OFFICE

Commissioner for Patents
United States Patent and Trademark Office
P.O. Box 1450
Alexandria, VA 22313-1450
www.uspto.gov

MAILED
MAY 24 2011
OFFICE OF PETITIONS

DELPHINE M. JAMES
2656 SOUTH LOOP WEST #170
HOUSTON, TX 77054

In re Application of Taylor :
Application No. 11/985,008 : Decision on Petition
Filing Date: November 13, 2007 :
For: Decorative Rim :

This is a decision on the renewed petition under 37 CFR 1.137(b) filed May 3, 2011, which requests revival of the application.

The petition is **granted**.

Background

The application was filed November 13, 2007.

On December 13, 2007, the Office issued a Notice to File Missing Parts of Nonprovisional Application setting forth a two-month extendable time period for reply. The Notice required:

(1) Payment of $15 to complete the examination fee,
(2) Payment of a $65 surcharge,
(3) Submission of an executed oath or declaration, and
(4) Submission of replacement drawings.

The papers filed November 13, 2007, did not include any mailing address. Therefore, the December 13, 2007 Notice was not actually mailed. However, the Notice was effective as of December 13, 2007, and the time period to reply to the Notice began on December 13, 2007.

On April 7, 2008, petitioner submitted a copy of a declaration from a prior provisional application. The papers filed April 7, 2008, did not include an extension of time fee, the $15 owed for the examination fee, the $65 surcharge, or replacement drawings. Since an extension of time was not submitted, the reply was untimely.

On April 22, 2008, the Office mailed a Notice of Incomplete Reply stating the Office still needed $15 for the examination fee, a $65 surcharge, and replacement drawings. The Notice stated the time period set forth in the prior December 13, 2007 Notice continued to run.

On June 13, 2008, petitioner submitted the $15 still owed for the examination, the $65 surcharge, and new drawings. The submission did not include payment for an extension of time. Therefore, the reply was untimely and improper. The reply was untimely because the reply did not include payment for an extension of time. The reply was improper because deficiencies in the drawings.

On June 24, 2008, the Office mailed a Notice identifying deficiencies in the drawings filed June 13, 2008, and requiring the submission of new replacement drawings.

The period for reply to the December 13, 2007 Notice could have been extended up to Monday, July 14, 2007, with payment for a five-month extension of time ($1,115). However, a request for an extension of time was not filed.

Absent payment for an extension of time, a reply to the December 13, 2007, was due on or before February 13, 2008. As previously discussed, an extension of time to file a reply was not obtained. Therefore, the application became abandoned on February 14, 2008.

The Office mailed a Notice of Abandonment on August 25, 2008.

A petition under 37 CFR 1.181 to withdraw the holding of abandonment was filed October 27, 2008.

A decision dismissing the October 27, 2008 petition was issued March 19, 2009.

A petition under 37 CFR 1.137(b) was filed August 3, 2010.

A decision dismissing the August 3, 2010 petition was mailed January 4, 2011.

A renewed petition under 37 CFR 1.137(b) was filed March 5, 2011.

A decision dismissing the petition was mailed April 21, 2011. The decision stated the petition was dismissed because the petition was "not accompanied by proper replacement drawings or a proper oath or declaration" and because the petition failed "to state the entire delay in filing the required reply from the due date for the reply until the filing of a grantable petition pursuant to 37 CFR 1.137(b) was unintentional."

The instant petition was filed May 3, 2011. The instant petition includes a new set of drawings and the required statement of unintentional delay.

Discussion

The instant petition requests revival of the application.

A grantable petition under 37 CFR 1.137(b) must be accompanied by:

(1) The reply required to the outstanding Office action or notice, unless previously filed,

(2) The petition fee,
(3) A statement that the entire delay in filing the required reply from the due date for the reply until the filing of a grantable petition pursuant to 37 CFR 1.137(b) was unintentional, and
(4) A terminal disclaimer and fee if the application was filed on or before June 8, 1995, or if the application is a design application.

The petition satisfies the requirements of 37 CFR 1.137(b) in so far as petitioner has supplied a reply to the Notice to File Missing Parts, the required petition fee of $810, and the required statement of unintentional delay. Therefore, the petition is granted and the application is revived.

The Office of Patent Application Processing will be informed of the instant decision and the application will be prepared for examination in due course.

Telephone inquiries regarding this communication should be directed to Petitions Attorney Steven Brantley at (571) 272-3203.

Charles Steven Brantley
Senior Petitions Attorney
Office of Petitions

UNITED STATES PATENT AND TRADEMARK OFFICE

Commissioner for Patents
United States Patent and Trademark Office
P.O. Box 1450
Alexandria, VA 22313-1450
www.uspto.gov

ERICKSON LAW GROUP, PC
1749 S. NAPERVILLE ROAD
SUITE 202
WHEATON IL 60189

MAILED
JAN 24 2011
OFFICE OF PETITIONS

In re Application of	:	
Garry ZYDRON	:	
Application No. 11/985,039	:	DECISION ON PETITION
Filed: November 13, 2007	:	
Docket No. 6550P0011US	:	

This is a decision on the petition under the unintentional provisions of 37 CFR 1.137(b), filed December 23, 2010, to revive the above-identified application.

The petition is **GRANTED**.

The application became abandoned for failure to reply in a timely manner to the non-final Office action mailed, May 3, 2010, which set a shortened statutory period for reply of three (3) months. No extensions of time under the provisions of 37 CFR 1.136(a) were obtained. Accordingly, the application became abandoned on August 4, 2010.

The petition satisfies the requirements of 37 CFR 1.137(b) in that petitioner has supplied (1) the reply in the form of an Amendment, (2) the petition fee of $810; and (3) and the required statement of unintentional delay.

It is not apparent whether the person signing the statement of unintentional delay was in a position to have firsthand or direct knowledge of the facts and circumstances of the delay at issue. Nevertheless, such statement is being treated as having been made as the result of a reasonable inquiry into the facts and circumstances of such delay. See 37 CFR 10.18(b) and Changes to Patent Practice and Procedure; Final Rule Notice, 62 Fed. Reg. 53131, 53178 (October 10, 1997), 1203 Off. Gaz. Pat. Office 63, 103 (October 21, 1997). In the event that such an inquiry has not been made, petitioner must make such an inquiry. If such inquiry results

in the discovery that it is not correct that the entire delay in filing the required reply from the due date for the reply until the filing of a grantable petition pursuant to 37 CFR 1.137(b) was unintentional, petitioner must notify the Office.

Telephone inquiries concerning this decision should be directed to the undersigned at (571) 272-6735.

This application is being referred to Technology Center AU 1745 for appropriate action by the Examiner in the normal course of business.

/Diane C. Goodwyn/
Diane C. Goodwyn
Petitions Examiner
Office of Petitions

UNITED STATES PATENT AND TRADEMARK OFFICE

Commissioner for Patents
United States Patent and Trademark Office
P.O. Box 1450
Alexandria, VA 22313-1450
www.uspto.gov

NEAL SOLOMON
P.O. BOX 21297
OAKLAND, CA 94620

MAILED

SEP 08 2011

OFFICE OF PETITIONS

In re Application of	:	
Neal Solomon	:	
Application No. 11/985,083	:	DECISION DISMISSING PETITION
Filed: November 13, 2007	:	UNDER 37 CFR 1.313(a)
Attorney Docket No.: None	:	

This is a decision in response to the petition, filed August 31, 2011, to withdraw the above-identified application from issue under the provisions of 37 CFR 1.313(a).

The petition is **DISMISSED AS MOOT** since this application is now abandoned for failure to timely pay the issue and publication fees on or before August 31, 2011 as required by the Notice of Allowance and Fee(s) Due, mailed May 31, 2011.

Petitioner should note that the mere filing of a petition to withdraw from issue does not stay the period for paying the fees required by the Notice of Allowance and Fee(s) Due. Unless an applicant receives a written communication from the Office that the application has been withdrawn from issue, the issue and publication fees must be timely submitted to avoid abandonment. *Note* MPEP § 1308(I)(A).

In view of the above, the petition to withdraw from issue must be dismissed as involving a moot issue.

Petitioner may wish to consider filing a petition under 37 CFR 1.137 to revive this application.

Inquiries concerning this decision may be directed to the undersigned at (571) 272- 3204.

/SDB/

Sherry D. Brinkley
Petitions Examiner
Office of Petitions

UNITED STATES PATENT AND TRADEMARK OFFICE

UNITED STATES DEPARTMENT OF COMMERCE
United States Patent and Trademark Office
Address: COMMISSIONER FOR PATENTS
P.O. Box 1450
Alexandria, Virginia 22313-1450
www.uspto.gov

APPLICATION NO.	FILING DATE	FIRST NAMED INVENTOR	ATTORNEY DOCKET NO.	CONFIRMATION NO.
11/985,183	11/13/2007	Bertrand Vick	PA4926US	6219

22830 7590 06/08/2011
CARR & FERRELL LLP
120 CONSTITUTION DRIVE
MENLO PARK, CA 94025

EXAMINER
CARR, DEBORAH D

ART UNIT	PAPER NUMBER
1622	

MAIL DATE	DELIVERY MODE
06/08/2011	PAPER

Please find below and/or attached an Office communication concerning this application or proceeding.

The time period for reply, if any, is set in the attached communication.

UNITED STATES PATENT AND TRADEMARK OFFICE

Commissioner for Patents
United States Patent and Trademark Office
P.O. Box 1450
Alexandria, VA 22313-1450
www.uspto.gov

June 7, 2011

CARR & FERRELL LLP
120 CONSTITUTION DRIVE
MENLO PARK CA 94025

In re Application of	:	
Bertrand Vick et al.	:	**DECISION ON PETITION**
Application No. 11985183	:	
Filed: 11/13/2007	:	
Attorney Docket No. **PA4926US**	:	

This is a decision on the Petition to Accept Color Drawings under 37 C.F.R 1.84 (a) (2), received in the United States Patent and Trademark Office (USPTO) November 13, 2007.

The petition is **DISMISSED.**

A grantable petition under 37 C.F.R. 1.84(a) (2) must be accompanied by the following.

1. The fee set forth under 37 C.F.R. 1.17(h),
2. Three (3) sets of the color drawings in question, (One (1) set for EFW filings, and
3. The specification containing the following language as the first paragraph in that portion of the specification relating to the brief description of the drawings

"The patent or application file contains at least one drawing executed in color. Copies of this patent or patent application publication with color drawing(s) will be provided by the Office upon request and payment of the necessary fee."

The petition did not meet the following requirement(s). 1 ☐ 2 ☐ 3 ☑

A renewed petition filed under 37 C.F.R. 1.84 (a) (2) must be filed within TWO (2) MONTHS of this decision. If a renewed petition is not filed within the TWO (2) Months of this decision the drawings will be printed in black and white.

Telephone inquires relating to this decision may be directed to the undersigned in the Office of Data Management at 571-272-4200.

/Laura L. Feldman/
Quality Control Specialist
Office of Data Management
Publications Branch

UNITED STATES PATENT AND TRADEMARK OFFICE

Commissioner for Patents
United States Patent and Trademark Office
P.O. Box 1450
Alexandria, VA 22313-1450
www.uspto.gov

ROBERT D. VARITZ, P.C.
4915 SE 33RD PLACE
PORTLAND OR 97202

MAILED
AUG 27 2010
OFFICE OF PETITIONS

In re Application of

Meckel, et al. :

Application No. 11/985,194

: DECISION ON PETITION

Filed: November 13, 2007

:

Attorney Docket No. **J-MCKL.1001**

This is a decision on the petition under 37 CFR 1.137(b), filed June 29, 2010, to revive the above-identified application.

The petition is **GRANTED**.

The above-cited application became abandoned for failure to reply in a timely manner to the non-final Office action mailed September 16, 2009, which set a shortened statutory period for reply of three (3) months from its mailing date. No extension of time pursuant to 37 CFR 1.136(a) was obtained within the allowable period. Accordingly, the application became abandoned on December 20, 2009. A Notice of Abandonment was mailed on March 31, 2010.

The amendment filed April 29, 2010, is noted.

The application is being forwarded to Technology Center 3700, GAU 3764 for further processing.

Telephone inquiries concerning this decision should be directed to the undersigned at (571) 272-3222.

/Kenya A. McLaughlin/

Kenya A. McLaughlin
Petitions Attorney
Office of Petitions

UNITED STATES PATENT AND TRADEMARK OFFICE

Commissioner for Patents
United States Patent and Trademark Office
P.O. Box 1450
Alexandria, VA 22313-1450
www.uspto.gov

September 1, 2010

Innovation Counsel LLP
21771 Stevens Creek Blvd
Ste. 200A
Cupertino CA 95014

In re Application of	:	
CHOUNG, JONG-HYUN	:	**DECISION ON PETITION**
Application No. 11/985,199	:	
Filed: 11/13/2007	:	***ACCEPTANCE OF COLOR***
Attorney Docket No. KASN90078 US	:	***DRAWINGS***

This is a decision on the Petition to Accept Color Drawings under 37 C.F.R 1.84 (a) (2), received in the United States Patent and Trademark Office (USPTO) November 13,2007.

The petition is **GRANTED**.

A grantable petition under 37 C.F.R. 1.84(a) (2) must be accompanied by the following.

1. The fee set forth under 37 C.F.R. 1.17(h),
2. Three (3) sets of the color drawings in question, and
3. The specification containing the following language as the first paragraph in that portion of the specification relating to the brief description of the drawings.

   "The file of this patent contains at least one drawing executed in color. Copies of this patent with color drawing(s) will be provided by the Patent and Trademark Office upon request and payment of the necessary fee."

Note: Only one set of drawings is required when petition is filed via EFS WEB.

The petition was accompanied by all of the requirements above. Therefore, the petition is GRANTED.

Telephone inquires relating to this decision may be directed to the undersigned in the Office of Data Management at 571-272-4200.

/Diane Terry/
Quality Control Specialist
Office of Data Management
Publications Branch

UNITED STATES PATENT AND TRADEMARK OFFICE

Commissioner for Patents
United States Patent and Trademark Office
P.O. Box 1450
Alexandria, VA 22313-1450
www.uspto.gov

JAMES D. PETRUZZI
4900 WOODWAY SUITE 745
HOUSTON TX 77056

MAILED

AUG 08 2011

OFFICE OF PETITIONS

In re Application of	:	
Christian BRAEKMAN, et *al.*	:	
Application No. 11/985,209	:	DECISION ON PETITION
Filed: November 14, 2007	:	UNDER 37 CFR 1.137(b)
Attorney Docket No.	:	

This is a decision on the petition under the unintentional provisions of 37 CFR 1.137(b), filed April 21, 2011, to revive the above-identified application.

The petition is **GRANTED**.

The application became abandoned for failure to reply in a timely manner to the non-final Office action mailed, September 29, 3010, which set a shortened statutory period for reply of three (3) months. No extensions of time under the provisions of 37 CFR 1.136(a) were obtained. Accordingly, the application became abandoned on December 30, 2010.

The petition satisfies the requirements of 37 CFR 1.137(b) in that petitioner has supplied (1) the reply in the form of an amendment, (2) the petition fee of $810; and (3) an adequate statement of unintentional delay.

Telephone inquiries concerning this decision should be directed to Monica A. Graves at (571) 272-7253.

This application is being referred to Technology Center AU 3627 for appropriate action by the Examiner in the normal course of business on the reply received April 21, 2011.

Thurman K. Page
Petitions Examiner
Office of Petitions

UNITED STATES PATENT AND TRADEMARK OFFICE

Commissioner for Patents
United States Patent and Trademark Office
P.O. Box 1450
Alexandria, VA 22313-1450
www.uspto.gov

Scott A. Whitaker, Ph.D., J.D.
Senior Intellectual Property Counsel
BioNumerik Pharmaceuticals, Inc.
8122 Datapoint Drive, Suite 1250
San Antonio, TX 78229

MAILED
FEB 04 2011
OFFICE OF PETITIONS

In re Patent No. 7,829,117	:	
Issue Date: November 9, 2010	:	
Application No. 11/985,241	:	NOTICE
Filed: November 14, 2007	:	
Patentee(s): Frederick H. Hausheer, et. al.	:	

This is a Notice regarding your request for acceptance of a fee deficiency submission under 37 CFR 1.28, filed on November 24, 2010.

The Office no longer investigates or rejects original or reissue applications under 37 CFR 1.56. 1098 Off. Gaz. Pat. Office 502 (January 3, 1989). Therefore, nothing in this Notice is intended to imply that an investigation was done.

Your fee deficiency submission under 37 CFR 1.28 is hereby **ACCEPTED**. Therefore, status as a small entity has been removed and any future fee(s) submitted must be paid at the large entity rate.

Additionally, the request is not signed by an attorney of record. However, in accordance with 37 CFR 1.34(a), the signature of Scott A. Whitaker appearing on the request shall constitute a representation to the United States Patent and Trademark Office that he is authorized to represent the particular party in whose behalf he acts.

Inquiries related to this communication should be directed to the undersigned at (571) 272-3226.

Andrea Smith
Petitions Examiner
Office of Petitions

UNITED STATES PATENT AND TRADEMARK OFFICE

Commissioner for Patents
United States Patent and Trademark Office
P.O. Box 1450
Alexandria, VA 22313-1450
www.uspto.gov

MAILED
FEB 04 2011
OFFICE OF PETITIONS

Scott A. Whitaker, Ph.D., J.D.
Senior Intellectual Property Counsel
BioNumerik Pharmaceuticals, Inc.
8122 Datapoint Drive, Suite 1250
San Antonio, TX 78229

In re Patent No. 7,829,538	:	
Issue Date: November 9, 2010	:	
Application No. 11/985,242	:	NOTICE
Filed: November 14, 2007	:	
Patentee(s): Frederick H. Hausheer, et. al.	:	

This is a Notice regarding your request for acceptance of a fee deficiency submission under 37 CFR 1.28, filed on November 24, 2010.

The Office no longer investigates or rejects original or reissue applications under 37 CFR 1.56. 1098 Off. Gaz. Pat. Office 502 (January 3, 1989). Therefore, nothing in this Notice is intended to imply that an investigation was done.

Your fee deficiency submission under 37 CFR 1.28 is hereby **ACCEPTED**. Therefore, status as a small entity has been removed and any future fee(s) submitted must be paid at the large entity rate.

Additionally, the request is not signed by an attorney of record. However, in accordance with 37 CFR 1.34(a), the signature of Scott A. Whitaker appearing on the request shall constitute a representation to the United States Patent and Trademark Office that he is authorized to represent the particular party in whose behalf he acts.

Inquiries related to this communication should be directed to the undersigned at (571) 272-3226.

Andrea Smith
Petitions Examiner
Office of Petitions

UNITED STATES PATENT AND TRADEMARK OFFICE

Commissioner for Patents
United States Patent and Trademark Office
P.O. Box 1450
Alexandria, VA 22313-1450
www.uspto.gov

MAILED

FEB 04 2011

OFFICE OF PETITIONS

Scott A. Whitaker, Ph.D., J.D.
Senior Intellectual Property Counsel
BioNumerik Pharmaceuticals, Inc.
8122 Datapoint Drive, Suite 1250
San Antonio, TX 78229

In re Patent No. 7,829,539	:	
Issue Date: November 9, 2010	:	
Application No. 11/985,243	:	NOTICE
Filed: November 14, 2007	:	
Patentee(s): Frederick H. Hausheer, et. al.	:	

This is a Notice regarding your request for acceptance of a fee deficiency submission under 37 CFR 1.28, filed on November 24, 2010.

The Office no longer investigates or rejects original or reissue applications under 37 CFR 1.56. 1098 Off. Gaz. Pat. Office 502 (January 3, 1989). Therefore, nothing in this Notice is intended to imply that an investigation was done.

Your fee deficiency submission under 37 CFR 1.28 is hereby **ACCEPTED**. Therefore, status as a small entity has been removed and any future fee(s) submitted must be paid at the large entity rate.

Additionally, the request is not signed by an attorney of record. However, in accordance with 37 CFR 1.34(a), the signature of Scott A. Whitaker appearing on the request shall constitute a representation to the United States Patent and Trademark Office that he is authorized to represent the particular party in whose behalf he acts.

Inquiries related to this communication should be directed to the undersigned at (571) 272-3226.

Andrea Smith
Petitions Examiner
Office of Petitions

UNITED STATES PATENT AND TRADEMARK OFFICE

Commissioner for Patents
United States Patent and Trademark Office
P.O. Box 1450
Alexandria, VA 22313-1450
www.uspto.gov

SCOTT A. WHITAKER, PH.D., J.D.
SENIOR INTELLECUAL PROPERTY COUNSEL
BIONUMERIK PHARMACEUTICALS, INC.
8122 DATAPOINT DRIVE, SUITE 1250
SAN ANTONIO TX 78229

MAILED
DEC 20 2010
OFFICE OF PETITIONS

In re Application of	:	
Frederick H. Hausheer et al.	:	
Application No. 11/985,244	:	NOTICE
Patent No. 7,829,540	:	
Filed: November 14, 2007	:	
Attorney Docket No. X-0236A		

This is a notice regarding your request for acceptance of a fee deficiency submission under 37 CFR 1.28.

The Office no longer investigates or rejects original or reissue patent under 37 CFR 1.56. **1098 Off. Gaz. Pat. Office 502 (January 3, 1989)**. Therefore, nothing in this Notice is intended to imply that an investigation was done.

Your fee deficiency submission under 37 CFR 1.28 is hereby **ACCEPTED**.

This patent is no longer entitled to small entity status. Accordingly, all future fees paid in this patent must be paid at the large entity rate.

Inquiries related to this communication should be directed to the undersigned at (571) 272-2783.

/Tredelle D. Jackson/
Paralegal Specialist
Office of Petitions

UNITED STATES PATENT AND TRADEMARK OFFICE

Commissioner for Patents
United States Patent and Trademark Office
P.O. Box 1450
Alexandria, VA 22313-1450
www.uspto.gov

MAILED

FEB 04 2011

OFFICE OF PETITIONS

Scott A. Whitaker, Ph.D., J.D.
Senior Intellectual Property Counsel
BioNumerik Pharmaceuticals, Inc.
8122 Datapoint Drive, Suite 1250
San Antonio, TX 78229

In re Patent No. 7,829,541	:	
Issue Date: November 9, 2010	:	
Application No. 11/985,272	:	NOTICE
Filed: November 14, 2007	:	
Patentee(s): Frederick H. Hausheer, et. al.	:	

This is a Notice regarding your request for acceptance of a fee deficiency submission under 37 CFR 1.28, filed on November 24, 2010.

The Office no longer investigates or rejects original or reissue applications under 37 CFR 1.56. 1098 Off. Gaz. Pat. Office 502 (January 3, 1989). Therefore, nothing in this Notice is intended to imply that an investigation was done.

Your fee deficiency submission under 37 CFR 1.28 is hereby **ACCEPTED**. Therefore, status as a small entity has been removed and any future fee(s) submitted must be paid at the large entity rate.

Additionally, the request is not signed by an attorney of record. However, in accordance with 37 CFR 1.34(a), the signature of Scott A. Whitaker appearing on the request shall constitute a representation to the United States Patent and Trademark Office that he is authorized to represent the particular party in whose behalf he acts.

Inquiries related to this communication should be directed to the undersigned at (571) 272-3226.

Andrea Smith
Petitions Examiner
Office of Petitions

UNITED STATES PATENT AND TRADEMARK OFFICE

UNITED STATES DEPARTMENT OF COMMERCE
United States Patent and Trademark Office
Address: COMMISSIONER FOR PATENTS
P.O. Box 1450
Alexandria, Virginia 22313-1450
www.uspto.gov

APPLICATION NO.	FILING DATE	FIRST NAMED INVENTOR	ATTORNEY DOCKET NO.	CONFIRMATION NO.
11/985,288	11/13/2007	Ramakrishna C. Dhanekula	SUN07-0762	9783

57960 7590 09/01/2011
PVF -- ORACLE AMERICA, INC.
C/O PARK, VAUGHAN, FLEMING & DOWLER LLP
2820 FIFTH STREET
DAVIS, CA 95618-7759

EXAMINER
BUSS, BENJAMIN J

ART UNIT	PAPER NUMBER
2129	

MAIL DATE	DELIVERY MODE
09/01/2011	PAPER

Please find below and/or attached an Office communication concerning this application or proceeding.

The time period for reply, if any, is set in the attached communication.

UNITED STATES PATENT AND TRADEMARK OFFICE

Commissioner for Patents
United States Patent and Trademark Office
P.O. Box 1450
Alexandria, VA 22313-1450
www.uspto.gov

PVF -- ORACLE AMERICA, INC.
C/O PARK, VAUGHAN, FLEMING & DOWLER LLP
2820 FIFTH STREET
DAVIS CA 95618-7759

In re Application of:
DHANEKULA, Ramakrishna et al.
Application No. 11/985,288
Filed: November 13, 2007
For: **PROACTIVE DETECTION OF METAL WHISKERS IN COMPUTER SYSTEMS**

DECISION ON PETITION UNDER 37 C.F.R. § 1.84(a)(2) TO ACCEPT COLOR DRAWINGS

This is a decision on the petition under 37 C.F.R. § 1.84(a)(2), filed on February 25, 2008, requesting acceptance of color drawings.

The petition requests that the color drawings of Figures 2, 6 and 10A-11B be accepted in lieu of black and white drawings.

A grantable petition under 37 C.F.R. § 1.84(a)(2) must be accompanied by a fee set forth under 37 C.F.R. § 1.17(h), 3 (three) sets of the color drawings in question, and the specification must contain, or be amended to contain, the following language as the first paragraph in that portion of the specification relating to the brief description of the drawings:

"The patent or application file contains at least one drawing executed in color. Copies of this patent or patent application publication with color drawings will be provided by the U.S. Patent and Trademark Office upon request and payment of the necessary fee."

The petition was filed with the required fee and was filed with three (3) sets of color drawing Figures 2, 6 and 10A-11B. Paragraph [0001] of the specification contains the required notification described above.

Accordingly, the petition is **GRANTED**.

Any inquiry regarding this decision should be directed to Eddie C. Lee at (571) 272-1732.

/Eddie C. Lee/

Eddie C. Lee
Quality Assurance Specialist, TC 2100

UNITED STATES PATENT AND TRADEMARK OFFICE

Commissioner for Patents
United States Patent and Trademark Office
P.O. Box 1450
Alexandria, VA 22313-1450
www.uspto.gov

MAILED

OCT 08 2010

OFFICE OF PETITIONS

JACQUELINE S LARSON
245 AVINGTON ROAD
ALAMEDA, CA 94502

In re Application of	:	
Daryl Faulds et al	:	
Application No. 11/985,335	:	DECISION ON PETITION
Filed: November 14, 2007	:	TO WITHDRAW
Attorney Docket No. BSPH-006N	:	FROM RECORD
	:	

This is a decision on the Request to Withdraw as attorney or agent of record under 37 C.F.R. § 1.36(b), filed August 13, 2010.

The request is **APPROVED**.

The request was signed by Jacqueline S. Larson on behalf of the practitioners of record associated with Customer Number 23979.

Applicant is reminded that there is no attorney of record at this time.

All future correspondence will be directed to assignee Bayer Schering Pharma Aktiengesellschaft at the address indicated below.

Telephone inquiries concerning this decision should be directed to Irvin Dingle at (571) 272-3210.

Irvin Dingle
Petitions Examiner
Office of Petitions

cc: Bayer Schering Pharma Aktiengesellschaft
Muellerstrasse 178
Berlin, Germany 13353

UNITED STATES PATENT AND TRADEMARK OFFICE

UNITED STATES DEPARTMENT OF COMMERCE
United States Patent and Trademark Office
Address: COMMISSIONER FOR PATENTS
P.O. Box 1450
Alexandria, Virginia 22313-1450
www.uspto.gov

APPLICATION NUMBER	FILING OR 371(C) DATE	FIRST NAMED APPLICANT	ATTY. DOCKET NO./TITLE
11/985,335	11/14/2007	Daryl Faulds	BSPH-006N

CONFIRMATION NO. 7048

BAYER SCHERING PHARMA AKTIENGESELLSCHAFT
MUELLERSTRASSE 178
BERLIN, 13353
GERMANY

POA ACCEPTANCE LETTER

OC000000043894317

Date Mailed: 10/08/2010

NOTICE OF ACCEPTANCE OF POWER OF ATTORNEY

This is in response to the Power of Attorney filed 08/13/2010.

The Power of Attorney in this application is accepted. Correspondence in this application will be mailed to the above address as provided by 37 CFR 1.33.

/idingle/

Office of Data Management, Application Assistance Unit (571) 272-4000, or (571) 272-4200, or 1-888-786-0101

UNITED STATES PATENT AND TRADEMARK OFFICE

UNITED STATES DEPARTMENT OF COMMERCE
United States Patent and Trademark Office
Address: COMMISSIONER FOR PATENTS
P.O. Box 1450
Alexandria, Virginia 22313-1450
www.uspto.gov

APPLICATION NUMBER	FILING OR 371(C) DATE	FIRST NAMED APPLICANT	ATTY. DOCKET NO./TITLE
11/985,335	11/14/2007	Daryl Faulds	BSPH-006N

CONFIRMATION NO. 7048

POWER OF ATTORNEY NOTICE

23979
JACQUELINE S LARSON
245 AVINGTON ROAD
ALAMEDA, CA 94502

OC000000043894312

Date Mailed: 10/08/2010

NOTICE REGARDING CHANGE OF POWER OF ATTORNEY

This is in response to the Power of Attorney filed 08/13/2010.

- The withdrawal as attorney in this application has been accepted. Future correspondence will be mailed to the new address of record. 37 CFR 1.33.

/idingle/

Office of Data Management, Application Assistance Unit (571) 272-4000, or (571) 272-4200, or 1-888-786-0101

UNITED STATES PATENT AND TRADEMARK OFFICE

Commissioner for Patents
United States Patent and Trademark Office
P.O. Box 1450
Alexandria, VA 22313-1450
www.uspto.gov

GATES & COOPER LLP
HOWARD HUGHES CENTER
6701 CENTER DRIVE WEST, SUITE 1050
LOS ANGELES CA 90045

MAILED

JAN 10 2011

OFFICE OF PETITIONS

In re Application of :
Xiao-Li Feng et al. :
Application No. 11/985,338 : ON PETITION
Filed: November 14, 2007 :
Attorney Docket No. **G&C 176.50-US-U1** :

This is a decision on the petition filed September 24, 2010, under 37 CFR 1.137(a)[1], to revive the above-identified application.

The petition is **GRANTED**.

This application became abandoned February 20, 2008 for failure to timely respond to the Notice to File Missing Parts mailed December 18, 2007. Accordingly, the Notice of Abandonment was mailed August 29, 2008.

Petitioner argues that the address used for mailing the Notice on December 18, 2007 was incorrect in that "... instead of using prior counsel's customer number 59250 and the associated correspondence address as filed, the Patent and Trademark Office erroneously mailed the Notice to File Missing Parts to the address of an attorney with the registration number 59250" and therefore the delay in filing a response to the Notice to File Missing Parts was unavoidable.

Decisions on reviving abandoned applications on the basis of "unavoidable" delay have adopted the reasonably prudent person standard in determining if the delay was unavoidable:

> The word 'unavoidable' . . . is applicable to ordinary human affairs, and requires no more or greater care or diligence than is generally used and

---

[1]A grantable petition under 37 CFR 1.137(a) must be accompanied by:

(1) the required reply, unless previously filed; In a nonprovisional application abandoned for failure to prosecute, the required reply may be met by the filing of a continuing application. In a nonprovisional utility or plant application filed on or after June 8, 1995, and abandoned for failure to prosecute, the required reply may also be met by the filing of a request for continued examination in compliance with § 1.114. In an application or patent, abandoned or lapsed for failure to pay the issue fee or any portion thereof, the required reply must be the payment of the issue fee or any outstanding balance thereof.

(2) the petition fee as set forth in 37 CFR 1.17(l);

(3) a showing to the satisfaction of the Director that the entire delay in filing the required reply from the due date for the reply until the filing of a grantable petition pursuant to 37 CFR 1.137(a) was unavoidable; and

(4) any terminal disclaimer (and fee as set forth in 37 CFR 1.20(d)) required pursuant to 37 CFR 1.137(c).

> observed by prudent and careful men in relation to their most important business. It permits them in the exercise of this care to rely upon the ordinary and trustworthy agencies of mail and telegraph, worthy and reliable employees, and such other means and instrumentalities as are usually employed in such important business. If unexpectedly, or through the unforeseen fault or imperfection of these agencies and instrumentalities, there occurs a failure, it may properly be said to be unavoidable, all other conditions of promptness in its rectification being present.[2]

Specifically, an application is "unavoidably" abandoned only where petitioner, or counsel for petitioner, takes all action necessary for a proper response to the outstanding Office action, but through the intervention of unforeseen circumstances, such as failure or mail, telegraph, telefacsimile, or the negligence of otherwise reliable employees, the response is not timely received in the Office.[3]

A review of the file reveals that the petitioner is correct and it is noted that an error on the part of the USPTO caused the office action mailed to not be received by the petitioner. Thus, petitioner's delay in responding to the Notice to File Missing Parts was unavoidable under the standard set out at 37 CFR 1.137(a).

All other requirements of 37 CFR 1.137(a)having now been met, this matter is being referred to the Office of Patent Application Processing for further pre-examination processing.

Telephone inquiries concerning this matter may be directed to the undersigned Petitions Attorney at (571) 272-3212.

Patricia Faison-Ball

Patricia Faison-Ball
Senior Petitions Attorney
Office of Petitions

---

[2] In re Mattullath, 38 App. D.C. 497, 514-15 (1912)(quoting Ex parte Pratt, 1887 Dec. Comm'r Pat. 31, 32-33 (1887)); see also Winkler v. Ladd, 221 F. Supp. 550, 552, 138 USPQ 666, 167-68 (D.D.C. 1963), aff'd, 143 USPQ 172 (D.C. Cir. 1963); Ex parte Henrich, 1913 Dec. Comm'r Pat. 139, 141 (1913). In addition, decisions on revival are made on a "case-by-case basis, taking all the facts and circumstances into account." Smith v. Mossinghoff, 671 F.2d 533, 538, 213 USPQ 977, 982 (D.C. Cir. 1982). Finally, a petition cannot be granted where a petitioner has failed to meet his or her burden of establishing that the delay was "unavoidable." Haines v. Quigg, 673 F. Supp. 314, 316-17, 5 USPQ2d 1130, 1131-32 (N.D. Ind. 1987).

[3] Ex parte Pratt, 1887 Dec. Comm'r Pat. 31 (Comm'r Pat. 1887).

UNITED STATES PATENT AND TRADEMARK OFFICE

Commissioner for Patents
United States Patent and Trademark Office
P.O. Box 1450
Alexandria, VA 22313-1450
www.uspto.gov

TIMOTHY E. SIEGEL PATENT LAW, PLLC
MARI YAMAMOTO
777 108TH AVENUE, SUITE 2240
BELLEVUE WA 98004-5178

MAILED
SEP 27 2011
OFFICE OF PETITIONS

In re Application of :
RINEHART et al :
Application No. 11/985,344 : DECISION ON PETITION
Filed: November 14, 2007 :
Attorney Docket No. R12.009 :

This is a decision on the petition under the unintentional provisions of 37 CFR 1.137(b), filed September 2, 2011, to revive the above-identified application.

The petition is **GRANTED**.

The petition satisfies the requirements of 37 CFR 1.137(b) in that petitioner has supplied (1) the reply in the form of an RCE and a previously filed amendment on March 1, 2011; (2) the petition fee of $810.00; and (3) an adequate statement of unintentional delay.

Since this application was abandoned for failure to timely reply to the final Office action of February 1, 2011 within the extendible six month period provided therefor, the Examiner had no procedural authority with respect to the abandoned application. **See Lorenz v. Finkl**, 333 F.2d 885; 891, 142 USPQ 26, 30 (CCPA 1964). Therefore, the examiner was without authority to act further in the case absent a grantable petition reviving the application. Nevertheless, in view of this decision on petition, the RCE and Amendment is now considered a proper filing and the actions of the examiner taken thereafter are hereby ratified.

Telephone inquiries concerning this decision should be directed to the undersigned at (571) 272-3208.

This application is being referred to Technology Center AU 2838 for appropriate action by the Examiner in the normal course of business.

/KOC/
Karen Creasy
Petitions Examiner
Office of Petitions

UNITED STATES PATENT AND TRADEMARK OFFICE

Commissioner for Patents
United States Patent and Trademark Office
P.O. Box 1450
Alexandria, VA 22313-1450
www.uspto.gov

CHOATE, HALL & STEWART LLP
TWO INTERNATIONAL PLACE
BOSTON MA 02110

MAILED

JAN 19 2011

OFFICE OF PETITIONS

In re Application of	:	
LEBOWITZ, Jonathan et al.	:	
Application No. 11/985,360	:	DECISION ON PETITION
Filed: November 13, 2007	:	TO WITHDRAW
Attorney Docket No. **2008266-0001 (SYM-013)**	:	FROM RECORD
	:	

This is a decision on the Request to Withdraw as attorney or agent of record under 37 C.F.R. § 1.36(b), filed December 17, 2010.

The request is **NOT APPROVED**.

The Office will no longer accept address changes to a new practitioner or law firm filed with a Request, absent the filing of a power of attorney to the new representative. The Office will either change the correspondence address of record to the most current address information provided for the assignee of the entire interest who properly became of record under 37 C.F.R 3.71 or, if no assignee of the entire interest has properly been made of record under 37 CFR 3.71, the most current address information provided for the first named inventor.

Accordingly, the request to withdraw from record cannot be approved because the change of address is not that of: (1) the first named inventor; or (2) an assignee of the entire interest under C.F.R 3.71, who has properly intervened.

All future communications from the Office will continue to be directed to the above-listed address until otherwise notified by applicant.

Telephone inquiries concerning this decision should be directed to the undersigned at 571-272-4231.

Michelle R. Eason
Paralegal Specialist
Office of Petitions

cc: **MARSHALL, GERSTEIN & BORUN LLP (BIOMARIN)**
233 SOUTH WACKER DRIVE
6300 WILLIS TOWER
CHICAGO, IL 60606

UNITED STATES PATENT AND TRADEMARK OFFICE

Commissioner for Patents
United States Patent and Trademark Office
P.O. Box 1450
Alexandria, VA 22313-1450
www.uspto.gov

Kirk A. Buhler
Buhler & Associates Patent Law
Suite 208
1101 California Ave
CORONA, CA 92881

MAILED

JUN 02 2011

OFFICE OF PETITIONS

In re Application of Hylton :
Application No. 11/985,363 : Decision on Petition
Filing Date: November 15, 2007 :
Attorney Docket No. RH02-01U :

This is a decision on the petition under 37 CFR 1.137(b) filed April 5, 2011, which requests revival of the above-identified application.

The petition is **dismissed**.

Any request for reconsideration must be submitted within TWO (2) MONTHS from the mail date of this decision. Extensions of time under 37 CFR 1.136(a) are permitted. The reconsideration request should include a cover letter titled "Renewed Petition under 37 CFR 1.137(b)."

The above-identified application became abandoned for failure to reply in a timely manner to the Notice of Non-Compliant Amendment mailed April 26, 2010, which set a shortened statutory period for reply of one (1) month or thirty (30) days (whichever is later). An extension of time under the provisions of 37 CFR 1.136(a) was not obtained. Accordingly, the above-identified application became abandoned on May 27, 2010. A Notice of Abandonment was mailed January 12, 2011.

The instant petition requests revival of the application.

The Office will not consider the merits of a petition absent payment of any required petition fee. The record fails to indicate Petitioner has submitted the required $810 petition fee. Therefore, the merits of the petition will not be considered and the petition is dismissed.

If Petitioner wishes to have the application revived, a request for reconsideration and the required $810 petition fee should be submitted.

A grantable petition under 37 CFR 1.137(b) must be accompanied by a statement that the entire delay in filing the required reply from the due date for the reply until the filing of a grantable petition pursuant to 37 CFR 1.137(b) was unintentional. Although the instant petition includes such a statement, the statement should also appear in any request for reconsideration. In other words, any request for reconsideration should include the following statement, or a similar statement: "The entire delay in filing the required reply from the due date for the reply until the filing the instant petition pursuant to 37 CFR 1.137(b) was unintentional."

Further correspondence with respect to this matter may be submitted as follows:

By Internet: A request for reconsideration may be filed electronically using EFS Web.[1] Document Code "PET.OP" should be used if the request is filed electronically.

By mail: Mail Stop Petition
Commissioner for Patents
P.O. Box 1450
Alexandria, VA 22313-1450

By facsimile: (571) 273-8300
Attn: Office of Petitions

By hand: U.S. Patent and Trademark Office
Customer Service Window
Randolph Building
401 Dulany Street
Alexandria, VA 22314

Telephone inquiries regarding this communication should be directed to Petitions Attorney Steven Brantley at (571) 272-3203.

Charles Steven Brantley
Senior Petitions Attorney
Office of Petitions

[1] General Information concerning EFS Web can be found at http://www.uspto.gov/patents/process/file/efs/index.jsp.

UNITED STATES PATENT AND TRADEMARK OFFICE

Commissioner for Patents
United States Patent and Trademark Office
P.O. Box 1450
Alexandria, VA 22313-1450
www.uspto.gov

Kirk A. Buhler
Buhler & Associates Patent Law
Suite 208
1101 California Ave
CORONA, CA 92881

MAILED

JUN 27 2011

OFFICE OF PETITIONS

In re Application of Hylton :
Application No. 11/985,363 : Decision on Petition
Filing Date: November 15, 2007 :
Attorney Docket No. RH02-01U :

This is a decision on the renewed petition under 37 CFR 1.137(b) filed June 13, 2011, which requests revival of the above-identified application.

The petition is **granted**.

The above-identified application became abandoned for failure to reply in a timely manner to the Notice of Non-Compliant Amendment mailed April 26, 2010, which set a shortened statutory period for reply of one (1) month or thirty (30) days (whichever is later). An extension of time under the provisions of 37 CFR 1.136(a) was not obtained. Accordingly, the above-identified application became abandoned on May 27, 2010. A Notice of Abandonment was mailed January 12, 2011.

A grantable petition under 37 CFR 1.137(b) must be accompanied by:

(1) The reply required to the outstanding Office action or notice, unless previously filed,
(2) The petition fee,
(3) A statement that the entire delay in filing the required reply from the due date for the reply until the filing of a grantable petition pursuant to 37 CFR 1.137(b) was unintentional, and
(4) A terminal disclaimer and fee if the application was filed on or before June 8, 1995, or if the application is a design application.

The petition satisfies the requirements of 37 CFR 1.137(b) in so far as petitioner has supplied (1) a reply in the form of an amendment filed April 8, 2011, (2) the required petition fee of $810, and (3) the required statement of unintentional delay. Therefore, the petition is granted and the application is revived.

Technology Center Art Unit 3781 will be informed of the instant decision and the application will be further examined in due course.

Telephone inquiries regarding this communication should be directed to Petitions Attorney Steven Brantley at (571) 272-3203.

Charles Steven Brantley
Senior Petitions Attorney
Office of Petitions

UNITED STATES PATENT AND TRADEMARK OFFICE

UNITED STATES DEPARTMENT OF COMMERCE
United States Patent and Trademark Office
Address: COMMISSIONER FOR PATENTS
P.O. Box 1450
Alexandria, Virginia 22313-1450
www.uspto.gov

APPLICATION NO.	FILING DATE	FIRST NAMED INVENTOR	ATTORNEY DOCKET NO.	CONFIRMATION NO.
11/985,460	11/14/2007	Euan A. Ashley	STAN-548CIP (S03-116)	8845

24353 7590 04/04/2011
BOZICEVIC, FIELD & FRANCIS LLP
1900 UNIVERSITY AVENUE
SUITE 200
EAST PALO ALTO, CA 94303

EXAMINER
HUYNH, PHUONG N

ART UNIT	PAPER NUMBER
1644	

MAIL DATE	DELIVERY MODE
04/04/2011	PAPER

Please find below and/or attached an Office communication concerning this application or proceeding.

The time period for reply, if any, is set in the attached communication.

UNITED STATES PATENT AND TRADEMARK OFFICE

Commissioner for Patents
United States Patent and Trademark Office
P.O. Box 1450
Alexandria, VA 22313-1450
www.uspto.gov

April 4, 2011

BOZICEVIC, FIELD & FRANCIS LLP
1900 UNIVERSITY AVENUE
SUITE 200
EAST PALO ALTO CA 94303

In re Application of	:	
Euan A. Ashley et al.	:	**DECISION ON PETITION**
Application No. 11985460	:	
Filed: 11/14/2007	:	
Attorney Docket No. STAN-548CIP (S03-116)	:	

This is a decision on the Petition to Accept Color Drawings under 37 C.F.R 1.84(a)(2), received in the United States Patent and Trademark Office (USPTO) November 14, 2007. Three (3) color copies of Figs. 8D-F, 13B-C, 14C and 17 were submitted with the petition. Replacement drawings for Figs. 14A-C were submitted on February 3, 2011. The replacement drawing for Fig. 14C was not submitted in color.

The petition is **DISMISSED.**

A grantable petition under 37 C.F.R. 1.84(a)(2) must be accompanied by the following.

1. The fee set forth under 37 C.F.R. 1.17(h),
2. Three (3) sets of the color drawings in question, (One (1) set for EFS filings), and
3. The specification containing the following language as the first paragraph in that portion of the specification relating to the brief description of the drawings.

"The patent or application file contains at least one drawing executed in color. Copies of this patent or patent application publication with color drawing(s) will be provided by the Office upon request and payment of the necessary fee."

The petition did not meet the following requirement(s). 1 ☐ 2 ☑ 3 ☐

A renewed petition filed under 37 C.F.R. 1.84(a)(2) must be filed within TWO (2) MONTHS of this decision. If a renewed petition is not filed within the TWO (2) Months of this decision the drawings will be printed in black and white.

Telephone inquires relating to this decision may be directed to the undersigned in the Office of Data Management at 571-272-4200.

/Don Fairchild/
Office of Data Management
Publications Branch

UNITED STATES PATENT AND TRADEMARK OFFICE

COMMISSIONER FOR PATENTS
UNITED STATES PATENT AND TRADEMARK OFFICE
P.O. BOX 1450
ALEXANDRIA, VA 22313-1450
www.uspto.gov

CHARLES E. BAXLEY, ESQUIRE
90 JOHN STREET
SUITE 403
NEW YORK NY 10038

MAILED
SEP 23 2011
OFFICE OF PETITIONS

In re Application of	:	
LIN et al.	:	
Application No. 11/985,497	:	DECISION ON PETITION
Filed: 11/15/2007	:	
Attorney Docket No. 17425 B (AP-3567)	:	

This is a decision on the petition filed September 16, 2011, which is being treated as a petition under 37 CFR 1.181 requesting withdrawal of the holding of abandonment in the above-identified application.

The petition is **GRANTED**.

A review of the record indicates that the Office mailed a Notice to File Corrected Application Papers on December 14, 2007, to the patent practitioner and address associated with Customer No. 36673. The Notice set a two-month extendable period to submit replacement drawings in compliance with 37 CFR 1.84 and 37 CFR 1.121(d). No extensions of the period for reply were obtained. As no timely reply was received in the USPTO in response to the Notice to File Corrected Application Papers, the application became abandoned by operation of statute on February 15, 2008. The Office did not subsequently mail a Notice of Abandonment nor did applicants file a petition to withdraw the holding abandonment or a petition to revive the application.

Although the application was abandoned by operation of statute, the Examiner mailed a non-final action on September 30, 2009, to the patent practitioner and address associated with Customer No. 36673. The non-final Office action set a three month shortened statutory period to reply. Extensions of the period for response were available under 37 CFR 1.136(a).

On April 19, 2010, applicants filed a reply to the Notice to File Corrected Application Papers mailed December 14, 2007, in the form of 10 sheets of replacement drawings. Additionally, applicants asserted that the Office mailed the Notice to File Corrected Application Papers of December 14, 2007, to an incorrect address associated with the wrong Customer No. 36673 (Haroon Chohan, 22 Mead Street, Hempstead, NY 11550). Applicants explained that the Mr. Chohan is not an attorney of record nor is he associated with this application. Applicants averred that the Office entered the incorrect mailing address associated with Customer No. 36673, instead of the correct Customer No. 36672 associated with applicants' attorney, Charles X. Baxley, who is the attorney of record.

On May 14, 2010, applicants filed a reply to the non-final Office action of September 30, 2009, in the form of an amendment. On May 19, 2010, the Examiner mailed a Notice of Abandonment to the patent practitioner and address associated with Customer No. 36673, indicating that the application was abandoned for applicants' failure to file a timely and proper reply to the non-final Office action mailed September 30, 2009.[1]

On September 16, 2011, applicants filed the present petition and a petition fee. Applicants explain they have not received the Office communications because the USPTO has been sending and continues to send correspondence to the wrong patent agent at an incorrect mailing address instead of the applicants' attorney or his firm. Applicants states that the correct Customer No. is 36672, which appears on the declaration and power of attorney for the application; however, the USPTO incorrectly entered Customer No. 33673 and has not corrected this error.

A review of the written record indicates an irregularity in the mailing of the Notice to File Corrected Application Papers of December 14, 2007, the non-final Office action of September 30, 2009, and the Notice of Abandonment of May 19, 2010. As the Notice to File Corrected Application Papers (as well as the non-final Office action) was mailed to an incorrect address, the holding of abandonment is hereby withdrawn. The application is restored to pending status. This decision ratifies the prosecution which occurred between the date of abandonment, February 15, 2008, and the mail date of this decision.

The Office notes that the declaration submitted on November 15, 2007, is defective because it does not identify the citizenship of each inventor. A new oath or declaration in compliance with 37 CFR 1.67(a) identifying this application by application number and filing date is required. See MPEP 602.01 and 602.02.

The Office has updated the correspondence address and the power of attorney to reflect the information associated with Customer No. 36672. Additionally, the Office notes that no petition fee is required for the filing of a petition under 37 CFR 1.181 to withdraw the holding of abandonment. The Office finance records reveal that applicants submitted two payments of $270.00 (a total of $540.00) for the filing of this petition. As no petition fee is required, the Office will refund $540.00 to the Deposit Account in due course.

---

[1] As previously indicated, the application actually became abandoned for failure to submit a timely reply to the Notice to File Corrected Application Papers.

This application is being referred to Technology Center Art Unit 1791 for the Examiner to issue an Office action in response to the amendment filed May 14, 2010.

Christina Tartera Donnell

Christina Tartera Donnell
Senior Petitions Attorney
Office of Petitions

Conferees: Anthony Knight, Director
David Bucci, Petitions Examiner

UNITED STATES PATENT AND TRADEMARK OFFICE

Commissioner for Patents
United States Patent and Trademark Office
P.O. Box 1450
Alexandria, VA 22313-1450
www.uspto.gov

November 15, 2011

CHRISTIE, PARKER & HALE, LLP
PO BOX 7068
PASADENA CA 91109-7068

In re Application of	:	
Jeong-Hee Lee et al.	:	**DECISION ON PETITION**
Application No. 11985531	:	
Filed: 11/14/2007	:	***ACCEPTANCE OF COLOR***
Attorney Docket No. **60061/L550**	:	***DRAWINGS***

This is a decision on the Petition to Accept Color Drawings under 37 C.F.R 1.84 (a) (2), received in the United States Patent and Trademark Office (USPTO) November 14, 2007.

The petition is **GRANTED**.

A grantable petition under 37 C.F.R. 1.84(a) (2) must be accompanied by the following.

1. The fee set forth under 37 C.F.R. 1.17(h),
2. Three (3) sets of the color drawings in question, or (1) set if filed via EFS, and
3. The specification contains appropriate language referring to the color drawings as the first paragraph in that portion of the specification relating to the brief description of the drawings.

The petition was accompanied by all of the required fees and drawings. The specification contains the appropriate language. Therefore, the petition is GRANTED.

Telephone inquires relating to this decision may be directed to the undersigned in the Office of Data Management at 571-272-4200.

/Laura Feldman/
Quality Control Specialist
Office of Data Management
Publications Branch

UNITED STATES PATENT AND TRADEMARK OFFICE

Commissioner for Patents
United States Patent and Trademark Office
P.O. Box 1450
Alexandria, VA 22313-1450
www.uspto.gov

MAILED
SEP 13 2011
OFFICE OF PETITIONS

FISH & RICHARDSON P.C.
P.O. Box 1022
MINNEAPOLIS MN 55440-1022

In re Application of
Wilensky
Application No. 11/985,532
Filed: November 15, 2007
Dkt. No.: 07844-920001

: DECISION ON APPLICATION FOR
: PATENT TERM ADJUSTMENT

This is a decision on the petition filed on September 1, 2011 requesting that the patent term adjustment indicated on the above-identified patent be corrected to indicate that the term of the above-identified patent is extended or adjusted by 747 days.

The petition to correct the patent term adjustment indicated on the above-identified patent to indicate that the term of the above-identified patent is extended or adjusted by 747 days is **GRANTED**.

The Office acknowledges receipt of the $200.00 fee set forth in 37 CFR 1.18(e). No additional fees are required.

The application file is being forwarded to the Office of Data Management for issuance of the patent. The patent term adjustment indicated on the patent (as shown on the Issue Notification mailed about three weeks prior to patent issuance) will include any additional adjustment accrued both for Office delay in issuing the patent more than four months after payment of the issue fee and satisfaction of all outstanding requirements, and for the Office taking in excess of three years to issue the patent (to the extent that the three-year period does not overlap with periods already accorded).

A copy of the adjustment PAIR calculation can be accessed by applicant via Private/Public PAIR.

Telephone inquiries specific to this matter should be directed to the undersigned at (571) 272-3205.

/ALESIA M. BROWN/

Alesia M. Brown
Attorney Advisor
Office of Petitions

UNITED STATES PATENT AND TRADEMARK OFFICE

Commissioner for Patents
United States Patent and Trademark Office
P.O. Box 1450
Alexandria, VA 22313-1450
www.uspto.gov

AMS RESEARCH CORPORATION
10700 BREN ROAD WEST
MINNETONKA MN 55343

MAILED

AUG 27 2010

OFFICE OF PETITIONS

In re Application of
Kumar, et al.
Application No. 11/985,565
Filed: 15 November, 2007
Attorney Docket No.: AMS-3023-US

DECISION
ON PETITION

This is a decision on the petition under 37 C.F.R. §1.78(a)(3) and (a)(6), filed 15 January, 2010, to accept an unintentionally delayed claim under 35 U.S.C. §120 and §119(e) for the benefit of priority to prior-filed application(s).

The petition is **DISMISSED.**

A petition for acceptance of a claim for late priority under 37 C.F.R. §1.78(a)(3)/(a)(6) is only applicable to those applications filed on or after November 29, 2000 and after the expiration of the period specified in 37 C.F.R. §1.78(a)(2)(ii). In addition, the petition under 37 C.F.R. §1.78(a)(3) must be accompanied by:

(1) the reference required by 35 U.S.C. §120 and 37 C.F.R. §1.78(a)(2)(i) of the prior-filed application, unless previously submitted;

(2) the surcharge set forth in §1.17(t); and

(3) a statement that the entire delay between the date the claim was due under 37 C.F.R. §1.78(a)(2)(ii) and the date the claim was filed was unintentional. The Director may require additional where there is a question whether the delay was unintentional.

Required tem (1), above, is not present.

Petitioner submitted contemporaneously with the petition an amendment filed wherein Petitioner states expressly: "which applications are *** herein incorporated by reference *** in their entireties."

Application No. 11/985,565

The amendment as filed contains a prohibited incorporation by reference statement (*see*: Dart Industries v. Banner, 636 F.2d 684, 207 USPQ 273 (C.A.D.C. 1980).

On deposit on 15 November, 2007, the instant application did not include an incorporation by reference of the Provisional Application Nos. 60/682, 944 or 60/405,140, or to non-provisional Application Nos. 11/437,960 or 10/646,383.

Nonetheless, Petitioner has submitted an amendment which seeks to do so now.

Such is not a proper amendment.

The amendment as drafted is unacceptable and, therefore, is not considered a proper reference under 37 C.F.R. §1.78(a)(2)(i) and under 37 C.F.R. §1.78(a)(5)(i).

Accordingly, the petition under 37 CFR 1.78(a)(3) is **dismissed**.

This application is released to Technology Center/AU 3731 for further processing in due course.

Any questions concerning this decision on petition may be directed to John J. Gillon, Jr., attorney, at (571) 272-3214. All other inquiries concerning either the examination procedures or status of the application should be directed to the Technology Center.

Chris Bottorff
Supervisory Petitions Examiner
Office of Petitions

UNITED STATES PATENT AND TRADEMARK OFFICE

Commissioner for Patents
United States Patent and Trademark Office
P.O. Box 1450
Alexandria, VA 22313-1450
www.uspto.gov

AMS RESEARCH CORPORATION
10700 BREN ROAD WEST
MINNETONKA MN 55343

MAILED

MAR 14 2011

OFFICE OF PETITIONS

In re Application of	:	
Kumar, et al.	:	
Application No. 11/985,565	:	DECISION
Filed: 15 November, 2007	:	ON PETITION
Attorney Docket No.: AMS-3023-US	:	

This is a decision on the petition pursuant to 37 C.F.R. §1.78(a)(3) and (a)(6), filed 2 September, 2010, to accept an unintentionally delayed claim pursuant to 35 U.S.C. §120 and §119(e) for the benefit of priority to prior-filed application(s).

The petition is **GRANTED.**

A petition for acceptance of a claim for late priority pursuant to 37 C.F.R. §1.78(a)(3)/(a)(6) is only applicable to those applications filed on or after November 29, 2000 and after the expiration of the period specified in 37 C.F.R. §1.78(a)(2)(ii). In addition, the petition under 37 C.F.R. §1.78(a)(3) must be accompanied by:

(1) the reference required by 35 U.S.C. §120 and §119(e) and 37 C.F.R. §1.78(a)(2)(i) of the prior-filed application, unless previously submitted;

(2) the surcharge set forth in §1.17(t); and

(3) a statement that the entire delay between the date the claim was due under 37 C.F.R. §1.78(a)(2)(ii) and the date the claim was filed was unintentional. The Director may require additional where there is a question whether the delay was unintentional.

The instant application was filed on 15 November, 2007. Office records reflect that the new claim was presented in an amendment on 2 September, 2010.

The petition complies with the requirements of the regulations at 37 C.F.R. §1.78(a)(3) as to reference, surcharge and statement.

Application No. 11/985,565

The petition for acceptance of an unintentionally delayed claim for the benefit of priority pursuant to 35 U.S.C. §120 and §119(e) to the above-noted, prior-filed nonprovisional and provisional applications satisfies the conditions of 37 C.F.R. §1.78(a)(3)/(a)(6).

The petition is **granted**.

A corrected Filing Receipt, which includes the priority claim to the above-noted, prior-filed nonprovisional and provisional applications, accompanies this decision on petition.

Petitioner is reminded that the granting of this petition and the mailing of a corrected Filing Receipt should not be viewed as an indication that a determination has been made that this application is entitled to claim benefit of the prior-filed application. A determination that applicant is entitled to claim benefit of the prior-filed application will be made by the Examiner prior to the mailing of a certificate of correction.

This application is released to Technology Center 3731 for consideration of the amendment by the Examiner.

Any inquiries concerning this decision may be directed to John Gillon at (571) 272-3214. All other inquiries concerning either the examination procedures or status of the application should be directed to the Technology Center.

Chris Bottorff
Supervisory Petitions Examiner
Office of Petitions

Enclosure: Corrected Filing Receipt

UNITED STATES PATENT AND TRADEMARK OFFICE

UNITED STATES DEPARTMENT OF COMMERCE
United States Patent and Trademark Office
Address: COMMISSIONER FOR PATENTS
P.O. Box 1450
Alexandria, Virginia 22313-1450
www.uspto.gov

APPLICATION NUMBER	FILING or 371(c) DATE	GRP ART UNIT	FIL FEE REC'D	ATTY.DOCKET.NO	TOT CLAIMS	IND CLAIMS
11/985,565	11/15/2007	3731	1790	AMS-3023-US	13	6

CONFIRMATION NO. 7954

CORRECTED FILING RECEIPT

40636
AMS RESEARCH CORPORATION
10700 BREN ROAD WEST
MINNETONKA, MN 55343

OC000000046510439

Date Mailed: 03/14/2011

Receipt is acknowledged of this non-provisional patent application. The application will be taken up for examination in due course. Applicant will be notified as to the results of the examination. Any correspondence concerning the application must include the following identification information: the U.S. APPLICATION NUMBER, FILING DATE, NAME OF APPLICANT, and TITLE OF INVENTION. Fees transmitted by check or draft are subject to collection. Please verify the accuracy of the data presented on this receipt. **If an error is noted on this Filing Receipt, please submit a written request for a Filing Receipt Correction. Please provide a copy of this Filing Receipt with the changes noted thereon. If you received a "Notice to File Missing Parts" for this application, please submit any corrections to this Filing Receipt with your reply to the Notice. When the USPTO processes the reply to the Notice, the USPTO will generate another Filing Receipt incorporating the requested corrections**

Applicant(s)

Monica Kumar, Maplewood, MN;
Vincent G. Copa, Minnetonka, MN;
Eric Barnum, Edina, MN;
Suranjan Roychowdhury, Plymouth, MN;
Kory P. Hamel, Bloomington, MN;
Randall C. Lieser, Plymouth, MN;
Robert L. Rykhus JR., Edina, MN;
Adam L. Gullickson, Richfield, MN;
Amy E. Geis, Shakopee, MN;

Power of Attorney: The patent practitioners associated with Customer Number 40636

Domestic Priority data as claimed by applicant

This appln claims benefit of 60/865,869 11/15/2006
and is a CIP of 11/437,960 05/19/2006 PAT 7,771,443
which claims benefit of 60/682,944 05/20/2005
This application 11/985,565
is a CIP of 10/646,383 08/21/2003
which claims benefit of 60/405,140 08/22/2002

Foreign Applications (You may be eligible to benefit from the **Patent Prosecution Highway** program at the USPTO. Please see http://www.uspto.gov for more information.)

If Required, Foreign Filing License Granted: 12/07/2007

The country code and number of your priority application, to be used for filing abroad under the Paris Convention, is **US 11/985,565**

Projected Publication Date: Not Applicable

Non-Publication Request: No

Early Publication Request: No
Title

Anastomosis Balloon Configurations and device

Preliminary Class

623

PROTECTING YOUR INVENTION OUTSIDE THE UNITED STATES

Since the rights granted by a U.S. patent extend only throughout the territory of the United States and have no effect in a foreign country, an inventor who wishes patent protection in another country must apply for a patent in a specific country or in regional patent offices. Applicants may wish to consider the filing of an international application under the Patent Cooperation Treaty (PCT). An international (PCT) application generally has the same effect as a regular national patent application in each PCT-member country. The PCT process **simplifies** the filing of patent applications on the same invention in member countries, but **does not result** in a grant of "an international patent" and does not eliminate the need of applicants to file additional documents and fees in countries where patent protection is desired.

Almost every country has its own patent law, and a person desiring a patent in a particular country must make an application for patent in that country in accordance with its particular laws. Since the laws of many countries differ in various respects from the patent law of the United States, applicants are advised to seek guidance from specific foreign countries to ensure that patent rights are not lost prematurely.

Applicants also are advised that in the case of inventions made in the United States, the Director of the USPTO must issue a license before applicants can apply for a patent in a foreign country. The filing of a U.S. patent application serves as a request for a foreign filing license. The application's filing receipt contains further information and guidance as to the status of applicant's license for foreign filing.

Applicants may wish to consult the USPTO booklet, "General Information Concerning Patents" (specifically, the section entitled "Treaties and Foreign Patents") for more information on timeframes and deadlines for filing foreign patent applications. The guide is available either by contacting the USPTO Contact Center at 800-786-9199, or it can be viewed on the USPTO website at http://www.uspto.gov/web/offices/pac/doc/general/index.html.

For information on preventing theft of your intellectual property (patents, trademarks and copyrights), you may wish to consult the U.S. Government website, http://www.stopfakes.gov. Part of a Department of Commerce initiative, this website includes self-help "toolkits" giving innovators guidance on how to protect intellectual property in specific countries such as China, Korea and Mexico. For questions regarding patent enforcement issues, applicants may call the U.S. Government hotline at 1-866-999-HALT (1-866-999-4158).

LICENSE FOR FOREIGN FILING UNDER

Title 35, United States Code, Section 184

Title 37, Code of Federal Regulations, 5.11 & 5.15

GRANTED

The applicant has been granted a license under 35 U.S.C. 184, if the phrase "IF REQUIRED, FOREIGN FILING LICENSE GRANTED" followed by a date appears on this form. Such licenses are issued in all applications where the conditions for issuance of a license have been met, regardless of whether or not a license may be required as set forth in 37 CFR 5.15. The scope and limitations of this license are set forth in 37 CFR 5.15(a) unless an earlier license has been issued under 37 CFR 5.15(b). The license is subject to revocation upon written notification. The date indicated is the effective date of the license, unless an earlier license of similar scope has been granted under 37 CFR 5.13 or 5.14.

This license is to be retained by the licensee and may be used at any time on or after the effective date thereof unless it is revoked. This license is automatically transferred to any related applications(s) filed under 37 CFR 1.53(d). This license is not retroactive.

The grant of a license does not in any way lessen the responsibility of a licensee for the security of the subject matter as imposed by any Government contract or the provisions of existing laws relating to espionage and the national security or the export of technical data. Licensees should apprise themselves of current regulations especially with respect to certain countries, of other agencies, particularly the Office of Defense Trade Controls, Department of State (with respect to Arms, Munitions and Implements of War (22 CFR 121-128)); the Bureau of Industry and Security, Department of Commerce (15 CFR parts 730-774); the Office of Foreign AssetsControl, Department of Treasury (31 CFR Parts 500+) and the Department of Energy.

NOT GRANTED

No license under 35 U.S.C. 184 has been granted at this time, if the phrase "IF REQUIRED, FOREIGN FILING LICENSE GRANTED" DOES NOT appear on this form. Applicant may still petition for a license under 37 CFR 5.12, if a license is desired before the expiration of 6 months from the filing date of the application. If 6 months has lapsed from the filing date of this application and the licensee has not received any indication of a secrecy order under 35 U.S.C. 181, the licensee may foreign file the application pursuant to 37 CFR 5.15(b).

UNITED STATES PATENT AND TRADEMARK OFFICE

Commissioner for Patents
United States Patent and Trademark Office
P.O. Box 1450
Alexandria, VA 22313-1450
www.uspto.gov

KNOBBE MARTENS OLSON & BEAR LLP
2040 MAIN STREET, FOURTEENTH FLOOR
IRVINE, CA 92614

MAILED

FEB 28 2011

OFFICE OF PETITIONS

In re Application of	:	
Kalyan HANDIQUE, et *al.*	:	
Application No. 11/985,577	:	DECISION GRANTING PETITION
Filed: November 14, 2007	:	UNDER 37 CFR 1.313(c)(2)
Attorney Docket No. **HANLB.029CP1**	:	

This is a decision on the petition under 37 CFR 1.313(c)(2), filed February 25, 2011, to withdraw the above-identified application from issue after payment of the issue fee.

The petition is **GRANTED**.

The above-identified application is withdrawn from issue for consideration of a submission under 37 CFR 1.114 (request for continued examination). *See* 37 CFR 1.313(c)(2).

Petitioner is advised that the issue fee paid on January 20, 2011 cannot be refunded. If, however, this application is again allowed, petitioner may request that it be applied towards the issue fee required by the new Notice of Allowance.[1]

Telephone inquiries should be directed to the undersigned at (571) 272-7253.

This application is being referred to Technology Center AU 1637 for processing of the request for continued examination under 37 CFR 1.114 and concurrently filed amendment. The Petition under 37 CFR 1.78(a)(3) to Accept Unintentionally Delayed Benefit Claim will be processed by the Office of Petitions in due course.

/Monica A. Graves/
Petitions Examiner, Office of Petitions

---

[1] *The request to apply the issue fee to the new Notice may be satisfied by completing and returning the new Part B – Fee(s) Transmittal Form (along with any balance due at the time of submission). Petitioner is advised that the Issue Fee Transmittal Form* ***must*** *be completed and timely submitted to avoid abandonment of the application.*

UNITED STATES PATENT AND TRADEMARK OFFICE

Commissioner for Patents
United States Patent and Trademark Office
P.O. Box 1450
Alexandria, VA 22313-1450
www.uspto.gov

MAILED
APR 12 2011
OFFICE OF PETITIONS

KNOBBE MARTENS OLSON & BEAR LLP
2040 MAIN STREET
FOURTEENTH FLOOR
IRVINE CA 92614

In re Application of	:	
Handique, et al.	:	
Application No. 11/985,577	:	DECISION ON PETITION
Filed: November 14, 2007	:	UNDER 37 CFR 1.78(a)(6)
Attorney Docket No. HANLB.029CP1	:	

This is a decision on the petition under 37 CFR 1.78(a)(6), filed February 25, 2011, to accept an unintentionally delayed claim under 35 U.S.C. §119(e) for the benefit of the prior-filed provisional applications set forth in the concurrently filed amendment.

The petition is **GRANTED.**

A petition under 37 CFR 1.78(a)(6) is only applicable to those applications filed on or after November 29, 2000. Further, the petition is appropriate only after expiration of the period specified in 37 CFR 1.78(a)(5)(ii) and must be filed during the pendency of the nonprovisional application. In addition, the petition must be accompanied by:

(1) the reference required by 35 U.S.C. § 119(e) and 37 CFR 1.78(a)(5)(i) to the prior-filed application, unless previously submitted;
(2) the surcharge set forth in § 1.17(t); and
(3) a statement that the entire delay between the date the claim was due under 37 CFR 1.78(a)(5)(ii) and the date the claim was filed was unintentional. The Director may require additional information where there is a question whether the delay was unintentional.

Additionally, the instant nonprovisional application must be pending at the time of filing of the reference to the prior-filed provisional applications as required by 37 CFR 1.78(a)(5)(ii). Further, a nonprovisional application in the priority chain claiming the benefit of the prior-filed provisional applications must have been filed within twelve months of the filing date of the prior-filed provisional applications.

All of the above requirements having been satisfied, the late claim for priority under 35 U.S.C. § 119(e) is accepted as being unintentionally delayed.

The granting of the petition to accept the delayed benefit claim to the prior-filed applications under 37 CFR 1.78(a)(6) should not be construed as meaning that this application is entitled to the benefit of the filing date of the prior-filed applications. In order for this application to be entitled to the benefit of the prior-filed applications, all other requirements under 35 U.S.C. §119(e) and 37 CFR 1.78(a)(4) and (a)(5) must be met. Similarly, the fact that the corrected Filing Receipt accompanying this decision on petition includes the prior-filed applications should not be construed as meaning that applicant is entitled to the claim for benefit of priority to the prior-filed applications noted thereon. Accordingly, the examiner will, in due course, consider this benefit claim and determine whether the application is entitled to the benefit of the earlier filing dates.

A corrected Filing Receipt, which includes the priority claim to the prior-filed provisional applications, accompanies this decision on petition.

Any inquiries concerning this decision may be directed to the undersigned at (571) 272-3230. All other inquiries concerning either the examination procedures or status of the application should be directed to the Technology Center.

The application is being forwarded to Technology Center AU 1637 for consideration by the examiner of the claim under 35 U.S.C. §119(e) for the benefit of priority to the prior-filed provisional applications.

Shirene Willis Brantley

Shirene Willis Brantley
Senior Petitions Attorney
Office of Petitions

ATTACHMENT: Corrected Filing Receipt

UNITED STATES PATENT AND TRADEMARK OFFICE

UNITED STATES DEPARTMENT OF COMMERCE
United States Patent and Trademark Office
Address: COMMISSIONER FOR PATENTS
P.O. Box 1450
Alexandria, Virginia 22313-1450
www.uspto.gov

APPLICATION NUMBER	FILING or 371(c) DATE	GRP ART UNIT	FIL FEE REC'D	ATTY.DOCKET.NO	TOT CLAIMS	IND CLAIMS
11/985,577	11/14/2007	1637	1338	HANLB.029CP1	30	2

CONFIRMATION NO. 8529

CORRECTED FILING RECEIPT

20995
KNOBBE MARTENS OLSON & BEAR LLP
2040 MAIN STREET
FOURTEENTH FLOOR
IRVINE, CA 92614

OC000000046786838

Date Mailed: 03/28/2011

Receipt is acknowledged of this non-provisional patent application. The application will be taken up for examination in due course. Applicant will be notified as to the results of the examination. Any correspondence concerning the application must include the following identification information: the U.S. APPLICATION NUMBER, FILING DATE, NAME OF APPLICANT, and TITLE OF INVENTION. Fees transmitted by check or draft are subject to collection. Please verify the accuracy of the data presented on this receipt. **If an error is noted on this Filing Receipt, please submit a written request for a Filing Receipt Correction. Please provide a copy of this Filing Receipt with the changes noted thereon. If you received a "Notice to File Missing Parts" for this application, please submit any corrections to this Filing Receipt with your reply to the Notice. When the USPTO processes the reply to the Notice, the USPTO will generate another Filing Receipt incorporating the requested corrections**

Applicant(s)

Kalyan Handique, Ypsilanti, MI;
Sundaresh N. Brahmasandra, Ann Arbor, MI;
Karthik Ganesan, Ann Arbor, MI;
Jeff Williams, Chelsea, MI;

Power of Attorney: The patent practitioners associated with Customer Number 20995

Domestic Priority data as claimed by applicant

This application is a CIP of 11/728,964 03/26/2007
which claims benefit of 60/859,284 11/14/2006
and claims benefit of 60/786,007 03/24/2006
This application 11/985,577
claims benefit of 60/859,284 11/14/2006
and claims benefit of 60/959,437 07/13/2007

Foreign Applications (You may be eligible to benefit from the **Patent Prosecution Highway** program at the USPTO. Please see http://www.uspto.gov for more information.)

If Required, Foreign Filing License Granted: 12/10/2007

The country code and number of your priority application, to be used for filing abroad under the Paris Convention, is **US 11/985,577**

Projected Publication Date: Not Applicable

Non-Publication Request: No

Early Publication Request: No

Title

MICROFLUIDIC SYSTEM FOR AMPLIFYING AND DETECTING POLYNUCLEOTIDES IN PARALLEL

Preliminary Class

435

PROTECTING YOUR INVENTION OUTSIDE THE UNITED STATES

Since the rights granted by a U.S. patent extend only throughout the territory of the United States and have no effect in a foreign country, an inventor who wishes patent protection in another country must apply for a patent in a specific country or in regional patent offices. Applicants may wish to consider the filing of an international application under the Patent Cooperation Treaty (PCT). An international (PCT) application generally has the same effect as a regular national patent application in each PCT-member country. The PCT process **simplifies** the filing of patent applications on the same invention in member countries, but **does not result** in a grant of "an international patent" and does not eliminate the need of applicants to file additional documents and fees in countries where patent protection is desired.

Almost every country has its own patent law, and a person desiring a patent in a particular country must make an application for patent in that country in accordance with its particular laws. Since the laws of many countries differ in various respects from the patent law of the United States, applicants are advised to seek guidance from specific foreign countries to ensure that patent rights are not lost prematurely.

Applicants also are advised that in the case of inventions made in the United States, the Director of the USPTO must issue a license before applicants can apply for a patent in a foreign country. The filing of a U.S. patent application serves as a request for a foreign filing license. The application's filing receipt contains further information and guidance as to the status of applicant's license for foreign filing.

Applicants may wish to consult the USPTO booklet, "General Information Concerning Patents" (specifically, the section entitled "Treaties and Foreign Patents") for more information on timeframes and deadlines for filing foreign patent applications. The guide is available either by contacting the USPTO Contact Center at 800-786-9199, or it can be viewed on the USPTO website at http://www.uspto.gov/web/offices/pac/doc/general/index.html.

For information on preventing theft of your intellectual property (patents, trademarks and copyrights), you may wish to consult the U.S. Government website, http://www.stopfakes.gov. Part of a Department of Commerce initiative, this website includes self-help "toolkits" giving innovators guidance on how to protect intellectual property in specific countries such as China, Korea and Mexico. For questions regarding patent enforcement issues, applicants may call the U.S. Government hotline at 1-866-999-HALT (1-866-999-4158).

LICENSE FOR FOREIGN FILING UNDER

Title 35, United States Code, Section 184

Title 37, Code of Federal Regulations, 5.11 & 5.15

GRANTED

The applicant has been granted a license under 35 U.S.C. 184, if the phrase "IF REQUIRED, FOREIGN FILING LICENSE GRANTED" followed by a date appears on this form. Such licenses are issued in all applications where

the conditions for issuance of a license have been met, regardless of whether or not a license may be required as set forth in 37 CFR 5.15. The scope and limitations of this license are set forth in 37 CFR 5.15(a) unless an earlier license has been issued under 37 CFR 5.15(b). The license is subject to revocation upon written notification. The date indicated is the effective date of the license, unless an earlier license of similar scope has been granted under 37 CFR 5.13 or 5.14.

This license is to be retained by the licensee and may be used at any time on or after the effective date thereof unless it is revoked. This license is automatically transferred to any related applications(s) filed under 37 CFR 1.53(d). This license is not retroactive.

The grant of a license does not in any way lessen the responsibility of a licensee for the security of the subject matter as imposed by any Government contract or the provisions of existing laws relating to espionage and the national security or the export of technical data. Licensees should apprise themselves of current regulations especially with respect to certain countries, of other agencies, particularly the Office of Defense Trade Controls, Department of State (with respect to Arms, Munitions and Implements of War (22 CFR 121-128)); the Bureau of Industry and Security, Department of Commerce (15 CFR parts 730-774); the Office of Foreign AssetsControl, Department of Treasury (31 CFR Parts 500+) and the Department of Energy.

NOT GRANTED

No license under 35 U.S.C. 184 has been granted at this time, if the phrase "IF REQUIRED, FOREIGN FILING LICENSE GRANTED" DOES NOT appear on this form. Applicant may still petition for a license under 37 CFR 5.12, if a license is desired before the expiration of 6 months from the filing date of the application. If 6 months has lapsed from the filing date of this application and the licensee has not received any indication of a secrecy order under 35 U.S.C. 181, the licensee may foreign file the application pursuant to 37 CFR 5.15(b).

UNITED STATES PATENT AND TRADEMARK OFFICE

Commissioner for Patents
United States Patent and Trademark Office
P.O. Box 1450
Alexandria, VA 22313-1450
www.uspto.gov

TOWNSEND AND TOWNSEND AND CREW, LLP
TWO EMBARCADERO CENTER
EIGHTH FLOOR
SAN FRANCISCO CA 94111-3834

MAILED

NOV 22 2010

OFFICE OF PETITIONS

In re Application of	:	
Yongki Kim	:	
Application No. 11/985,580	:	DECISION ON PETITION
Filed: November 14, 2007	:	UNDER 37 CFR 1.78(a)(6)
Attorney Docket No. 00939P-092711US	:	

This is a decision on the petition under 37 CFR 1.78(a)(6), filed October 21, 2010, to accept an unintentionally delayed claim under 35 U.S.C. § 119(e) for the benefit of a prior-filed provisional application, as set forth in the concurrently filed Application Data Sheet (ADS) and Amendment.

The petition is **GRANTED**.

A petition under 37 CFR 1.78(a)(6) is only applicable to those applications filed on or after November 29, 2000. Further, the petition is appropriate only after expiration of the period specified in 37 CFR 1.78(a)(5)(ii) and must be filed during the pendency of the nonprovisional application. In addition, the petition must be accompanied by:

> **(1)** the reference required by 35 U.S.C. § 119(e) and 37 CFR 1.78(a)(5)(i) to the prior-filed application, unless previously submitted;
> **(2)** the surcharge set forth in § 1.17(t); and
> **(3)** a statement that the entire delay between the date the claim was due under 37 CFR 1.78(a)(5)(ii) and the date the claim was filed was unintentional. The Commissioner may require additional information where there is a question whether the delay was unintentional.

A reference to add the prior-filed applications on page one following the first sentence of the specification has been included in a concurrently filed amendment. However, the amendment is not acceptable as drafted since it improperly incorporates by reference the prior-filed applications. Petitioner's attention is directed to Dart Industries v. Banner, 636 F.2d 684, 207 USPQ 273 (C.A.D.C. 1980), where the court drew a distinction between a permissible 35 U.S.C. § 120 statement and the impermissible introduction of new matter by way of incorporation by reference in a 35 U.S.C. § 120 statement. Application No. 11/378,183 was referenced in the first sentence of the specification upon filing, and the amendment submitted with the instant petition references Application No. 60/776,109. Therefore, the incorporation by reference sentence included in the amendment is not proper for Application No. 60/776,109. However, the Office will accept the priority claims as shown in the application data sheet (ADS), filed October 21, 2010.

The petition complies with the requirements for a grantable petition under 37 CFR 1.78(a)(6) in that (1) a reference to the prior-filed provisional application has been included in an ADS, as provided by 37 CFR 1.78(a)(5)(iii); (2) the surcharge fee required by 37 CFR 1.17(t) has been submitted; and (3) the petition contains a proper statement of unintentional delay. Accordingly, having found that the instant petition for acceptance of an unintentionally delayed claim for the benefit of priority under 35 U.S.C. § 119(e) to the prior-filed provisional application satisfies the conditions of 37 CFR 1.78(a)(6), the petition is granted.

The granting of the petition to accept the delayed benefit claim to the prior-filed application under 37 CFR 1.78(a)(6) should not be construed as meaning that the instant application is entitled to the benefit of the filing date of the prior-filed application. In order for the instant application to be entitled to the benefit of the prior-filed application, all other requirements under 35 U.S.C. §119(e) and 37 CFR 1.78(a)(4) and (a)(5) must be met. Similarly, the fact that the corrected Filing Receipt accompanying this decision on petition includes the prior-filed application should not be construed as meaning that applicant is entitled to the claim for benefit of priority to the prior-filed application noted thereon. Accordingly, the examiner will, in due course, consider this benefit claim and determine whether the instant application is entitled to the benefit of the earlier filing date.

A corrected Filing Receipt, which includes the priority claim to the prior-filed provisional application, accompanies this decision on petition.

Any inquiries concerning this decision may be directed to Joan Olszewski at (571) 272-7751. Any other inquiries concerning either the examination procedures or status of the application should be directed to the Technology Center.

This matter is being referred to Technology Center Art Unit 2824 for appropriate action on the ADS and Amendment submitted October 21, 2010, including consideration by the examiner of the claim under 35 U.S.C. §119(e) and 37 CFR 1.78(a)(5) for the benefit of the prior-filed provisional application.

/Liana Walsh/
Liana Walsh
Petitions Examiner
Office of Petitions

ATTACHMENT: Corrected Filing Receipt

UNITED STATES PATENT AND TRADEMARK OFFICE

UNITED STATES DEPARTMENT OF COMMERCE
United States Patent and Trademark Office
Address: COMMISSIONER FOR PATENTS
P.O. Box 1450
Alexandria, Virginia 22313-1450
www.uspto.gov

APPLICATION NUMBER	FILING or 371(c) DATE	GRP ART UNIT	FIL FEE REC'D	ATTY.DOCKET.NO	TOT CLAIMS	IND CLAIMS
11/985,580	11/14/2007	2824	1960	00939P-092711US	30	3

CONFIRMATION NO. 8861

CORRECTED FILING RECEIPT

20350
TOWNSEND AND TOWNSEND AND CREW, LLP
TWO EMBARCADERO CENTER
EIGHTH FLOOR
SAN FRANCISCO, CA 94111-3834

OC000000044618837

Date Mailed: 11/22/2010

Receipt is acknowledged of this non-provisional patent application. The application will be taken up for examination in due course. Applicant will be notified as to the results of the examination. Any correspondence concerning the application must include the following identification information: the U.S. APPLICATION NUMBER, FILING DATE, NAME OF APPLICANT, and TITLE OF INVENTION. Fees transmitted by check or draft are subject to collection. Please verify the accuracy of the data presented on this receipt. **If an error is noted on this Filing Receipt, please submit a written request for a Filing Receipt Correction. Please provide a copy of this Filing Receipt with the changes noted thereon. If you received a "Notice to File Missing Parts" for this application, please submit any corrections to this Filing Receipt with your reply to the Notice. When the USPTO processes the reply to the Notice, the USPTO will generate another Filing Receipt incorporating the requested corrections**

Applicant(s)

Yongki Kim, Icheon-Si, KOREA, REPUBLIC OF;

Assignment For Published Patent Application

Hynix Semiconductor Inc., Ichon-si, KOREA, REPUBLIC OF

Power of Attorney: None

Domestic Priority data as claimed by applicant

This application is a CON of 11/378,183 03/16/2006 PAT 7,313,047
which claims benefit of 60/776,109 02/23/2006

Foreign Applications

If Required, Foreign Filing License Granted: 12/11/2007

The country code and number of your priority application, to be used for filing abroad under the Paris Convention, is **US 11/985,580**

Projected Publication Date: Not Applicable

Non-Publication Request: No

Early Publication Request: No

Title

DYNAMIC SEMICONDUCTOR MEMORY WITH IMPROVED REFRESH MECHANISM

Preliminary Class

365

PROTECTING YOUR INVENTION OUTSIDE THE UNITED STATES

Since the rights granted by a U.S. patent extend only throughout the territory of the United States and have no effect in a foreign country, an inventor who wishes patent protection in another country must apply for a patent in a specific country or in regional patent offices. Applicants may wish to consider the filing of an international application under the Patent Cooperation Treaty (PCT). An international (PCT) application generally has the same effect as a regular national patent application in each PCT-member country. The PCT process **simplifies** the filing of patent applications on the same invention in member countries, but **does not result** in a grant of "an international patent" and does not eliminate the need of applicants to file additional documents and fees in countries where patent protection is desired.

Almost every country has its own patent law, and a person desiring a patent in a particular country must make an application for patent in that country in accordance with its particular laws. Since the laws of many countries differ in various respects from the patent law of the United States, applicants are advised to seek guidance from specific foreign countries to ensure that patent rights are not lost prematurely.

Applicants also are advised that in the case of inventions made in the United States, the Director of the USPTO must issue a license before applicants can apply for a patent in a foreign country. The filing of a U.S. patent application serves as a request for a foreign filing license. The application's filing receipt contains further information and guidance as to the status of applicant's license for foreign filing.

Applicants may wish to consult the USPTO booklet, "General Information Concerning Patents" (specifically, the section entitled "Treaties and Foreign Patents") for more information on timeframes and deadlines for filing foreign patent applications. The guide is available either by contacting the USPTO Contact Center at 800-786-9199, or it can be viewed on the USPTO website at http://www.uspto.gov/web/offices/pac/doc/general/index.html.

For information on preventing theft of your intellectual property (patents, trademarks and copyrights), you may wish to consult the U.S. Government website, http://www.stopfakes.gov. Part of a Department of Commerce initiative, this website includes self-help "toolkits" giving innovators guidance on how to protect intellectual property in specific countries such as China, Korea and Mexico. For questions regarding patent enforcement issues, applicants may call the U.S. Government hotline at 1-866-999-HALT (1-866-999-4158).

LICENSE FOR FOREIGN FILING UNDER

Title 35, United States Code, Section 184

Title 37, Code of Federal Regulations, 5.11 & 5.15

GRANTED

The applicant has been granted a license under 35 U.S.C. 184, if the phrase "IF REQUIRED, FOREIGN FILING LICENSE GRANTED" followed by a date appears on this form. Such licenses are issued in all applications where the conditions for issuance of a license have been met, regardless of whether or not a license may be required as

set forth in 37 CFR 5.15. The scope and limitations of this license are set forth in 37 CFR 5.15(a) unless an earlier license has been issued under 37 CFR 5.15(b). The license is subject to revocation upon written notification. The date indicated is the effective date of the license, unless an earlier license of similar scope has been granted under 37 CFR 5.13 or 5.14.

This license is to be retained by the licensee and may be used at any time on or after the effective date thereof unless it is revoked. This license is automatically transferred to any related applications(s) filed under 37 CFR 1.53(d). This license is not retroactive.

The grant of a license does not in any way lessen the responsibility of a licensee for the security of the subject matter as imposed by any Government contract or the provisions of existing laws relating to espionage and the national security or the export of technical data. Licensees should apprise themselves of current regulations especially with respect to certain countries, of other agencies, particularly the Office of Defense Trade Controls, Department of State (with respect to Arms, Munitions and Implements of War (22 CFR 121-128)); the Bureau of Industry and Security, Department of Commerce (15 CFR parts 730-774); the Office of Foreign AssetsControl, Department of Treasury (31 CFR Parts 500+) and the Department of Energy.

NOT GRANTED

No license under 35 U.S.C. 184 has been granted at this time, if the phrase "IF REQUIRED, FOREIGN FILING LICENSE GRANTED" DOES NOT appear on this form. Applicant may still petition for a license under 37 CFR 5.12, if a license is desired before the expiration of 6 months from the filing date of the application. If 6 months has lapsed from the filing date of this application and the licensee has not received any indication of a secrecy order under 35 U.S.C. 181, the licensee may foreign file the application pursuant to 37 CFR 5.15(b).

UNITED STATES PATENT AND TRADEMARK OFFICE

UNITED STATES DEPARTMENT OF COMMERCE
United States Patent and Trademark Office
Address: COMMISSIONER FOR PATENTS
P.O. Box 1450
Alexandria, Virginia 22313-1450
www.uspto.gov

APPLICATION NO.	FILING DATE	FIRST NAMED INVENTOR	ATTORNEY DOCKET NO.	CONFIRMATION NO.
11/985,603	11/15/2007	Y. Sean Lin	12040USC01	9036

7590 09/22/2010
Marina G. Portnova
BLAKELY, SOKOLOFF, TAYLOR & ZAFMAN LLP
1279 Oakmead Parkway
Sunnyvale, CA 94085-4040

EXAMINER
LEE, DOUGLAS S

ART UNIT	PAPER NUMBER
2121	

MAIL DATE	DELIVERY MODE
09/22/2010	PAPER

Please find below and/or attached an Office communication concerning this application or proceeding.

The time period for reply, if any, is set in the attached communication.

UNITED STATES PATENT AND TRADEMARK OFFICE

Commissioner for Patents
United States Patent and Trademark Office
P.O. Box 1450
Alexandria, VA 22313-1450
www.uspto.gov

Marina G. Portnova
BLAKELY, SOKOLOFF, TAYLOR & ZAFMAN LLP
1279 Oakmead Parkway
Sunnyvale CA 94085-4040

In re Application of:
Sean Y. Lin et al.
Application No. 11/985603
Filed: November 15, 2007
For: GRAPHICAL USER INTERFACE FOR PRESENTING MULTIVARIATE FAULT CONTRIBUTIONS

DECISION ON PETITION UNDER 37 C.F.R. § 1.84(a)(2) TO ACCEPT COLOR DRAWINGS

This is a decision on the petition under 37 C.F.R. § 1.84(a)(2), filed 9 February 2009, requesting acceptance of color drawings.

The petition requests that the color drawings of Figures 4, 6A and 6B be accepted in lieu of black and white drawings.

A grantable petition under 37 C.F.R. § 1.84(a)(2) must be accompanied by a fee set forth under 37 C.F.R. § 1.17(h), 3 (three) sets of the color drawings in question, and the specification must contain, or be amended to contain, the following language as the first paragraph in that portion of the specification relating to the brief description of the drawings:

"the file of this patent contains at least one drawing executed in color. Copies of this patent with color drawing(s) will be provided by the Patent and Trademark Office upon request and payment of the necessary fee."

The petition was filed with the required fee and was filed with three (3) sets of color drawings of Figures 4, 6A and 6B. The specification at paragraph 0008 did contain the required notification described above.

The petition is **GRANTED**.

/Kakali Chaki/

Kakali Chaki
Quality Assurance Specialist
Technology Center 2100

UNITED STATES PATENT AND TRADEMARK OFFICE

Commissioner for Patents
United States Patent and Trademark Office
P.O. Box 1450
Alexandria, VA 22313-1450
www.uspto.gov

IOVATE HEALTH SCIENCE RESEARCH INC.
381 NORTH SERVICE ROAD WEST
OAKVILLE ON L6M 0H4 CA CANADA

MAILED

OCT 06 2010

OFFICE OF PETITIONS

In re Application of	:	
Heuer et al.	:	
Application No. 11/985,609	:	DECISION ON PETITION
Filed: November 14, 2007	:	
Attorney Docket No. 7.00019(US-Div)	:	

This is a decision on the petition under the unintentional provisions of 37 CFR 1.137(b), filed August 23, 2010, to revive the above-identified application.

The petition is **GRANTED**.

The application became abandoned for failure to reply in a proper and timely manner to the final Office action mailed, January 25, 2010, which set a shortened statutory period for reply of three (3) months. No extensions of time under the provisions of 37 CFR 1.136(a) were obtained. Accordingly, the application became abandoned on April 26, 2010. A Notice of Abandonment was mailed August 10, 2010.

The petition satisfies the requirements of 37 CFR 1.137(b) in that petitioner has supplied (1) the reply in the form of a Notice of Appeal and fee of $270.00; (2) the petition fee of $810.00; and (3) a proper statement of unintentional delay.

The two-month period for filing an appeal brief under 37 CFR 41.37 (accompanied by the fee required by 37 CFR 41.20(b)(2)), runs from the date of this decision.

Telephone inquiries concerning this decision should be directed to the undersigned at (571) 272-7751.

This matter is being referred to Technology Center AU 1655 to await the filing of an appeal brief or for such other appropriate reply as may be submitted to continue prosecution of the application.

Joan Olszewski

Joan Olszewski
Petitions Examiner
Office of Petitions

UNITED STATES PATENT AND TRADEMARK OFFICE

Commissioner for Patents
United States Patent and Trademark Office
P.O. Box 1450
Alexandria, VA 22313-1450
www.uspto.gov

UNISYS CORPORATION
UNISYS WAY
MAIL STATION: S1-108
BLUE BELL PA 19424

MAILED

AUG 05 2010

OFFICE OF PETITIONS

In re Application of	:	
Mazzagatti et al.	:	
Application No. 11/985,623	:	DECISION ON PETITION
Filed: November 16, 2007	:	UNDER 37 CFR 1.78(a)(3)
Attorney Docket No. TN489.US	:	

This is a decision on the petition under 37 CFR 1.78(a)(3), filed July 6, 2010, to accept an unintentionally delayed claim under 35 U.S.C. § 120 for the benefit of priority to the prior-filed nonprovisional applications set forth in the amendment filed concurrently with the instant petition.

The petition is **DISMISSED**.

The instant petition was not signed. As stated in MPEP 714.01(a), amendments and other papers, including petitions, filed in the application must be signed by:

(1) A registered patent attorney or patent agent of record appointed in compliance with § 1.32(b);

(2) A registered attorney or agent not of record who acts in a representative capacity under the provisions of § 1.34;

(3) An assignee as provided for under § 3.71(b) of this chapter; or

(4) All of the applicants (§ 1.41(b)) for patent, unless there is an assignee of the entire interest and such assignee has taken action in the application in accordance with § 3.71 of this chapter.

Further correspondence with respect to this matter should be addressed as follows:

By mail: Mail Stop PETITIONS
Commissioner for Patents
Post Office Box 1450
Alexandria, VA 22313-1450

By hand: Customer Window located at:
U.S. Patent and Trademark Office
Customer Service Window Randolph Building
401 Dulany Street
Alexandria, VA 22314

By fax: (571) 273-8300
ATTN: Office of Petitions

Any questions concerning this matter may be directed to the undersigned at (571) 272-3206.

Liana Walsh
Petitions Examiner
Office of Petitions

UNITED STATES PATENT AND TRADEMARK OFFICE

Commissioner for Patents
United States Patent and Trademark Office
P.O. Box 1450
Alexandria, VA 22313-1450
www.uspto.gov

UNISYS CORPORATION
OFFICE OF THE GENERAL COUNSEL
801 LAKEVIEW DRIVE, SUITE 100
MAILSTOP: 2NW
BLUE BELL PA 19422

MAILED

SEP 07 2010

OFFICE OF PETITIONS

In re Application of	:	
Mazzagatti et al.	:	
Application No. 11/985,623	:	DECISION GRANTING PETITION
Filed: November 16, 2007	:	UNDER 37 CFR 1.78(a)(3)
Attorney Docket No. TN489.US	:	

This is a decision on the renewed petition under 37 CFR 1.78(a)(3), filed August 12, 2010, to accept an unintentionally delayed claim under 35 U.S.C. § 120 for the benefit of priority to the prior-filed nonprovisional applications set forth in the amendment filed July 6, 2010, with the previous petition.

The petition is **GRANTED**.

A petition for acceptance of a claim for late priority under 37 CFR 1.78(a)(3) is only applicable to those applications filed on or after November 29, 2000. Further, the petition is appropriate only after the expiration of the period specified in 37 CFR 1.78(a)(2)(ii). In addition, the petition under 37 CFR 1.78(a)(3) must be accompanied by:

(1) the reference required by 35 U.S.C. § 120 and 37 CFR 1.78(a)(2)(i) of the prior-filed application, unless previously submitted;
(2) the surcharge set forth in § 1.17(t); and
(3) a statement that the entire delay between the date the claim was due under 37 CFR 1.78(a)(2)(ii) and the date the claim was filed was unintentional. The Commissioner may require additional information where there is a question whether the delay was unintentional.

The instant nonprovisional application was filed after November 29, 2000, and the claim herein for the benefit of priority to the prior-filed nonprovisional applications is submitted after expiration of the period specified by 37 CFR 1.78(a)(2)(ii). Therefore, this is a proper petition under 37 CFR 1.78(a)(3).

The petition complies with the requirements for a grantable petition under 37 CFR 1.78(a)(3) in that (1) a reference to the above-noted, prior-filed nonprovisional applications has been included in an amendment to the first sentence of the specification following the title, as provided by 37 CFR 1.78(a)(2)(iii); (2) the surcharge fee required by 37 CFR 1.17(t) has been submitted; and (3) the petition contains a proper statement of unintentional delay. Accordingly, having found that the instant petition for acceptance of an unintentionally delayed claim for the benefit of priority

under 35 U.S.C. § 120 to the above-noted, prior-filed nonprovisional applications satisfies the conditions of 37 CFR 1.78(a)(3), the petition is granted.

The granting of the petition to accept the delayed benefit claim to the prior-filed applications under 37 CFR 1.78(a)(3) should not be construed as meaning that the instant application is entitled to the benefit of the prior-filed applications. In order for the instant application to be entitled to the benefit of the prior-filed applications, all other requirements under 35 U.S.C. § 120 and 37 CFR 1.78(a)(1) and (a)(2) must be met. Similarly, the fact that the corrected Filing Receipt accompanying this decision on petition includes the prior-filed applications should not be construed as meaning that applicant is entitled to the claim for benefit of priority to the prior-filed applications noted thereon. Accordingly, the examiner will, in due course, consider this benefit claim and determine whether the instant application is entitled to the benefit of the earlier filing date.

A corrected Filing Receipt, which includes the priority claim to the prior-filed nonprovisional applications, accompanies this decision on petition.

Any inquiries concerning this decision may be directed to the undersigned at (571) 272-3282.

This matter is being referred to Technology Center Art Unit 2162 for appropriate action on the amendment filed July 6, 2010, including consideration by the examiner of applicant's entitlement to claim benefit of priority under 35 U.S.C. § 120 to the prior-filed nonprovisional applications.

Liana Walsh
Petitions Examiner
Office of Petitions

ATTACHMENT: Corrected Filing Receipt

UNITED STATES PATENT AND TRADEMARK OFFICE

UNITED STATES DEPARTMENT OF COMMERCE
United States Patent and Trademark Office
Address: COMMISSIONER FOR PATENTS
P.O. Box 1450
Alexandria, Virginia 22313-1450
www.uspto.gov

APPLICATION NUMBER	FILING or 371(c) DATE	GRP ART UNIT	FIL FEE REC'D	ATTY.DOCKET.NO	TOT CLAIMS	IND CLAIMS
11/985,623	11/16/2007	2162	1160	TN489.US	20	3

CONFIRMATION NO. 9726

CORRECTED FILING RECEIPT

OC000000043371246

27276
UNISYS CORPORATION
Office of the General Counsel
801 Lakeview Drive, Suite 100
MailStop: 2NW
BLUE BELL, PA 19422

Date Mailed: 09/07/2010

Receipt is acknowledged of this non-provisional patent application. The application will be taken up for examination in due course. Applicant will be notified as to the results of the examination. Any correspondence concerning the application must include the following identification information: the U.S. APPLICATION NUMBER, FILING DATE, NAME OF APPLICANT, and TITLE OF INVENTION. Fees transmitted by check or draft are subject to collection. Please verify the accuracy of the data presented on this receipt. **If an error is noted on this Filing Receipt, please submit a written request for a Filing Receipt Correction. Please provide a copy of this Filing Receipt with the changes noted thereon. If you received a "Notice to File Missing Parts" for this application, please submit any corrections to this Filing Receipt with your reply to the Notice. When the USPTO processes the reply to the Notice, the USPTO will generate another Filing Receipt incorporating the requested corrections**

Applicant(s)

Jane C. Mazzagatti, Blue Bell, PA;
Tony Phan, Abington, PA;

Power of Attorney: The patent practitioners associated with Customer Number 27276

Domestic Priority data as claimed by applicant

This application is a CIP of 10/666,382 09/19/2003 PAT 7,158,975 *
and is a CIP of 11/185,620 07/20/2005 ABN
(*)Data provided by applicant is not consistent with PTO records.

Foreign Applications

If Required, Foreign Filing License Granted: 12/10/2007

The country code and number of your priority application, to be used for filing abroad under the Paris Convention, is **US 11/985,623**

Projected Publication Date: Request for Non-Publication Acknowledged

Non-Publication Request: Yes

Early Publication Request: No

Title

Kstore scenario simulator processor and XML file

Preliminary Class

707

PROTECTING YOUR INVENTION OUTSIDE THE UNITED STATES

Since the rights granted by a U.S. patent extend only throughout the territory of the United States and have no effect in a foreign country, an inventor who wishes patent protection in another country must apply for a patent in a specific country or in regional patent offices. Applicants may wish to consider the filing of an international application under the Patent Cooperation Treaty (PCT). An international (PCT) application generally has the same effect as a regular national patent application in each PCT-member country. The PCT process **simplifies** the filing of patent applications on the same invention in member countries, but **does not result** in a grant of "an international patent" and does not eliminate the need of applicants to file additional documents and fees in countries where patent protection is desired.

Almost every country has its own patent law, and a person desiring a patent in a particular country must make an application for patent in that country in accordance with its particular laws. Since the laws of many countries differ in various respects from the patent law of the United States, applicants are advised to seek guidance from specific foreign countries to ensure that patent rights are not lost prematurely.

Applicants also are advised that in the case of inventions made in the United States, the Director of the USPTO must issue a license before applicants can apply for a patent in a foreign country. The filing of a U.S. patent application serves as a request for a foreign filing license. The application's filing receipt contains further information and guidance as to the status of applicant's license for foreign filing.

Applicants may wish to consult the USPTO booklet, "General Information Concerning Patents" (specifically, the section entitled "Treaties and Foreign Patents") for more information on timeframes and deadlines for filing foreign patent applications. The guide is available either by contacting the USPTO Contact Center at 800-786-9199, or it can be viewed on the USPTO website at http://www.uspto.gov/web/offices/pac/doc/general/index.html.

For information on preventing theft of your intellectual property (patents, trademarks and copyrights), you may wish to consult the U.S. Government website, http://www.stopfakes.gov. Part of a Department of Commerce initiative, this website includes self-help "toolkits" giving innovators guidance on how to protect intellectual property in specific countries such as China, Korea and Mexico. For questions regarding patent enforcement issues, applicants may call the U.S. Government hotline at 1-866-999-HALT (1-866-999-4158).

LICENSE FOR FOREIGN FILING UNDER

Title 35, United States Code, Section 184

Title 37, Code of Federal Regulations, 5.11 & 5.15

GRANTED

The applicant has been granted a license under 35 U.S.C. 184, if the phrase "IF REQUIRED, FOREIGN FILING LICENSE GRANTED" followed by a date appears on this form. Such licenses are issued in all applications where the conditions for issuance of a license have been met, regardless of whether or not a license may be required as

set forth in 37 CFR 5.15. The scope and limitations of this license are set forth in 37 CFR 5.15(a) unless an earlier license has been issued under 37 CFR 5.15(b). The license is subject to revocation upon written notification. The date indicated is the effective date of the license, unless an earlier license of similar scope has been granted under 37 CFR 5.13 or 5.14.

This license is to be retained by the licensee and may be used at any time on or after the effective date thereof unless it is revoked. This license is automatically transferred to any related applications(s) filed under 37 CFR 1.53(d). This license is not retroactive.

The grant of a license does not in any way lessen the responsibility of a licensee for the security of the subject matter as imposed by any Government contract or the provisions of existing laws relating to espionage and the national security or the export of technical data. Licensees should apprise themselves of current regulations especially with respect to certain countries, of other agencies, particularly the Office of Defense Trade Controls, Department of State (with respect to Arms, Munitions and Implements of War (22 CFR 121-128)); the Bureau of Industry and Security, Department of Commerce (15 CFR parts 730-774); the Office of Foreign AssetsControl, Department of Treasury (31 CFR Parts 500+) and the Department of Energy.

NOT GRANTED

No license under 35 U.S.C. 184 has been granted at this time, if the phrase "IF REQUIRED, FOREIGN FILING LICENSE GRANTED" DOES NOT appear on this form. Applicant may still petition for a license under 37 CFR 5.12, if a license is desired before the expiration of 6 months from the filing date of the application. If 6 months has lapsed from the filing date of this application and the licensee has not received any indication of a secrecy order under 35 U.S.C. 181, the licensee may foreign file the application pursuant to 37 CFR 5.15(b).

UNITED STATES PATENT AND TRADEMARK OFFICE

Commissioner for Patents
United States Patent and Trademark Office
P.O. Box 1450
Alexandria, VA 22313-1450
www.uspto.gov

THE PROCTER & GAMBLE COMPANY
Global Legal Department - IP
Sycamore Building - 4th Floor
299 East Sixth Street
CINCINNATI OH 45202

MAILED
MAY 04 2011
OFFICE OF PETITIONS

In re Application of	:	
Kvietok, et al.	:	
Application No. 11/985,646	:	DECISION ON PETITION
Filed: November 16, 2007	:	UNDER 37 CFR 1.78(a)(6)
Attorney Docket No. 9214CD	:	

This is a decision on the petition captioned under 37 CFR 1.78(a)(3), filed March 10, 2011, which will be treated as a petition under 37 CFR 1.78(a)(6), to accept an unintentionally delayed claim under 35 U.S.C. § 119(e) for the benefit of priority to a prior-filed provisional application.

The petition is **DISMISSED.**

A petition under 37 CFR 1.78(a)(6) is only applicable to those applications filed on or after November 29, 2000. Further, the petition is appropriate only after expiration of the period specified in 37 CFR 1.78(a)(5)(ii) and must be filed during the pendency of the nonprovisional application. In addition, the petition must be accompanied by:

(1) the reference required by 35 U.S.C. § 119(e) and 37 CFR 1.78(a)(5)(i) to the prior-filed application, unless previously submitted;
(2) the surcharge set forth in § 1.17(t); and
(3) a statement that the entire delay between the date the claim was due under 37 CFR 1.78(a)(5)(ii) and the date the claim was filed was unintentional. The Director may require additional information where there is a question whether the delay was unintentional.

This pending nonprovisional application was filed on November 16, 2007. Application No. 09/904,019, an application in the priority chain, was filed on July 12, 2001, within twelve months of the filing date of the newly claimed prior-filed provisional application, Application No. 60/251,067, which was filed on December 4, 2000. A reference to the prior-filed provisional application has been included in a supplemental ADS.

However, the petition is dismissed because the supplemental ADS contains incomplete information. "Claims the benefit of" is not an acceptable relationship between nonprovisional

applications and PCT or other nonprovisional applications. Please submit another supplemental ADS with acceptable continuity types indicated.

Accordingly, before the petition under 37 CFR 1.78(a)(6) can be granted, a renewed petition under 37 CFR 1.78(a)(6) and a supplemental Application Data Sheet, are required.

As authorized, the $1,410.00 fee required by 37 CFR 1.78(a)(6)(ii) will be charged to petitioners' Deposit Account No.16-2480.

Further correspondence with respect to this matter should be addressed as follows:

By mail:	Mail Stop PETITIONS Commissioner for Patents Post Office Box 1450 Alexandria, VA 22313-1450
By hand:	Customer Service Window Mail Stop Petitions Randolph Building 401 Dulany Street Alexandria, VA 22314
By fax:	(571) 273-8300 ATTN: Office of Petitions
By internet:	EFS-Web www.uspto.gov/ebc/efs_help.html (for help using EFS-Web call the Patent Electronic Business Center at (866) 217-9197)

Any questions concerning this matter may be directed to the undersigned at (571) 272-3230.

Shirene Willis Brantley

Shirene Willis Brantley
Senior Petitions Attorney
Office of Petitions

UNITED STATES PATENT AND TRADEMARK OFFICE

Commissioner for Patents
United States Patent and Trademark Office
P.O. Box 1450
Alexandria, VA 22313-1450
www.uspto.gov

THE PROCTER & GAMBLE COMPANY
Global Legal Department - IP
Sycamore Building - 4th Floor
299 East Sixth Street
CINCINNATI OH 45202

MAILED
MAY 27 2011
OFFICE OF PETITIONS

In re Application of	:
Kvietok, et al.	:
Application No. 11/985,646	: DECISION ON PETITION
Filed: November 16, 2007	: UNDER 37 CFR 1.78(a)(6)
Attorney Docket No. 9214CD	:

This is a decision on the renewed petition under 37 CFR 1.78(a)(6), filed May 18, 2011, to accept an unintentionally delayed claim under 35 U.S.C. § 119(e) for the benefit of priority to a prior-filed provisional application.

The petition is **GRANTED.**

A petition under 37 CFR 1.78(a)(6) is only applicable to those applications filed on or after November 29, 2000. Further, the petition is appropriate only after expiration of the period specified in 37 CFR 1.78(a)(5)(ii) and must be filed during the pendency of the nonprovisional application. In addition, the petition must be accompanied by:

(1) the reference required by 35 U.S.C. § 119(e) and 37 CFR 1.78(a)(5)(i) to the prior-filed application, unless previously submitted;
(2) the surcharge set forth in § 1.17(t); and
(3) a statement that the entire delay between the date the claim was due under 37 CFR 1.78(a)(5)(ii) and the date the claim was filed was unintentional. The Director may require additional information where there is a question whether the delay was unintentional.

This pending nonprovisional application was filed on November 16, 2007. Application No. 09/904,019, an application in the priority chain, was filed on July 12, 2001, within twelve months of the filing date of the newly claimed prior-filed provisional application, Application No. 60/251,067, which was filed on December 4, 2000. A reference to the prior-filed provisional application has been included in a supplemental ADS.

All of the above requirements having been satisfied, the late claim for priority under 35 U.S.C. § 119(e) is accepted as being unintentionally delayed.

The granting of the petition to accept the delayed benefit claim to the prior-filed application under 37 CFR 1.78(a)(6) should not be construed as meaning that this application is entitled to the benefit of the filing date of the prior-filed application. In order for this application to be entitled to the benefit of the prior-filed application, all other requirements under 35 U.S.C. §119(e) and 37 CFR 1.78(a)(4) and (a)(5) must be met. Similarly, the fact that the corrected Filing Receipt accompanying this decision on petition includes the prior-filed application should not be construed as meaning that applicant is entitled to the claim for benefit of priority to the prior-filed application noted thereon. Accordingly, the examiner will, in due course, consider this benefit claim and determine whether the application is entitled to the benefit of the earlier filing date.

A corrected Filing Receipt, which includes the priority claim to the prior-filed provisional application, accompanies this decision on petition.

Any inquiries concerning this decision may be directed to the undersigned at (571) 272-3230. All other inquiries concerning either the examination procedures or status of the application should be directed to the Technology Center.

The application is being forwarded to Technology Center AU 1775 for consideration by the examiner of the claim under 35 U.S.C. §119(e) for the benefit of priority to the prior-filed provisional application.

Shirene Willis Brantley

Shirene Willis Brantley
Senior Petitions Attorney
Office of Petitions

ATTACHMENT: Corrected Filing Receipt

UNITED STATES PATENT AND TRADEMARK OFFICE

UNITED STATES DEPARTMENT OF COMMERCE
United States Patent and Trademark Office
Address: COMMISSIONER FOR PATENTS
P.O. Box 1450
Alexandria, Virginia 22313-1450
www.uspto.gov

APPLICATION NUMBER	FILING or 371(c) DATE	GRP ART UNIT	FIL FEE REC'D	ATTY.DOCKET.NO	TOT CLAIMS	IND CLAIMS
11/985,646	11/16/2007	1775	1760	9214CD	20	4

CONFIRMATION NO. 9046

CORRECTED FILING RECEIPT

27752
THE PROCTER & GAMBLE COMPANY
Global Legal Department - IP
Sycamore Building - 4th Floor
299 East Sixth Street
CINCINNATI, OH 45202

OC000000047877119

Date Mailed: 05/25/2011

Receipt is acknowledged of this non-provisional patent application. The application will be taken up for examination in due course. Applicant will be notified as to the results of the examination. Any correspondence concerning the application must include the following identification information: the U.S. APPLICATION NUMBER, FILING DATE, NAME OF APPLICANT, and TITLE OF INVENTION. Fees transmitted by check or draft are subject to collection. Please verify the accuracy of the data presented on this receipt. **If an error is noted on this Filing Receipt, please submit a written request for a Filing Receipt Correction. Please provide a copy of this Filing Receipt with the changes noted thereon. If you received a "Notice to File Missing Parts" for this application, please submit any corrections to this Filing Receipt with your reply to the Notice. When the USPTO processes the reply to the Notice, the USPTO will generate another Filing Receipt incorporating the requested corrections**

Applicant(s)

Frank Andrej Kvietok, Aurora, CO;
Eileen Marie St. Pierre, Cincinnati, OH;

Assignment For Published Patent Application

The Procter & Gamble Company, Cincinnati, OH

Power of Attorney: The patent practitioners associated with Customer Number 27752

Domestic Priority data as claimed by applicant

This application is a DIV of 11/124,962 05/09/2005
which is a CON of 10/417,456 04/16/2003 ABN
which is a CIP of 09/904,019 07/12/2001 ABN
which is a CIP of PCT/US00/20499 07/27/2000
and is a CIP of 09/730,226 12/05/2000 PAT 6,581,915
and is a CIP of 09/730,261 12/05/2000 ABN
and is a CIP of 09/730,333 12/05/2000 ABN
and claims benefit of 60/251,067 12/04/2000

Foreign Applications (You may be eligible to benefit from the **Patent Prosecution Highway** program at the USPTO. Please see http://www.uspto.gov for more information.)

If Required, Foreign Filing License Granted: 12/10/2007

The country code and number of your priority application, to be used for filing abroad under the Paris Convention, is **US 11/985,646**

Projected Publication Date: Not Applicable

Non-Publication Request: No

Early Publication Request: No
Title

SYSTEMS AND DEVICES FOR EMITTING VOLATILE COMPOSITIONS

Preliminary Class

422

PROTECTING YOUR INVENTION OUTSIDE THE UNITED STATES

Since the rights granted by a U.S. patent extend only throughout the territory of the United States and have no effect in a foreign country, an inventor who wishes patent protection in another country must apply for a patent in a specific country or in regional patent offices. Applicants may wish to consider the filing of an international application under the Patent Cooperation Treaty (PCT). An international (PCT) application generally has the same effect as a regular national patent application in each PCT-member country. The PCT process **simplifies** the filing of patent applications on the same invention in member countries, but **does not result** in a grant of "an international patent" and does not eliminate the need of applicants to file additional documents and fees in countries where patent protection is desired.

Almost every country has its own patent law, and a person desiring a patent in a particular country must make an application for patent in that country in accordance with its particular laws. Since the laws of many countries differ in various respects from the patent law of the United States, applicants are advised to seek guidance from specific foreign countries to ensure that patent rights are not lost prematurely.

Applicants also are advised that in the case of inventions made in the United States, the Director of the USPTO must issue a license before applicants can apply for a patent in a foreign country. The filing of a U.S. patent application serves as a request for a foreign filing license. The application's filing receipt contains further information and guidance as to the status of applicant's license for foreign filing.

Applicants may wish to consult the USPTO booklet, "General Information Concerning Patents" (specifically, the section entitled "Treaties and Foreign Patents") for more information on timeframes and deadlines for filing foreign patent applications. The guide is available either by contacting the USPTO Contact Center at 800-786-9199, or it can be viewed on the USPTO website at http://www.uspto.gov/web/offices/pac/doc/general/index.html.

For information on preventing theft of your intellectual property (patents, trademarks and copyrights), you may wish to consult the U.S. Government website, http://www.stopfakes.gov. Part of a Department of Commerce initiative, this website includes self-help "toolkits" giving innovators guidance on how to protect intellectual property in specific countries such as China, Korea and Mexico. For questions regarding patent enforcement issues, applicants may call the U.S. Government hotline at 1-866-999-HALT (1-866-999-4158).

LICENSE FOR FOREIGN FILING UNDER

Title 35, United States Code, Section 184

Title 37, Code of Federal Regulations, 5.11 & 5.15

GRANTED

The applicant has been granted a license under 35 U.S.C. 184, if the phrase "IF REQUIRED, FOREIGN FILING LICENSE GRANTED" followed by a date appears on this form. Such licenses are issued in all applications where

the conditions for issuance of a license have been met, regardless of whether or not a license may be required as set forth in 37 CFR 5.15. The scope and limitations of this license are set forth in 37 CFR 5.15(a) unless an earlier license has been issued under 37 CFR 5.15(b). The license is subject to revocation upon written notification. The date indicated is the effective date of the license, unless an earlier license of similar scope has been granted under 37 CFR 5.13 or 5.14.

This license is to be retained by the licensee and may be used at any time on or after the effective date thereof unless it is revoked. This license is automatically transferred to any related applications(s) filed under 37 CFR 1.53(d). This license is not retroactive.

The grant of a license does not in any way lessen the responsibility of a licensee for the security of the subject matter as imposed by any Government contract or the provisions of existing laws relating to espionage and the national security or the export of technical data. Licensees should apprise themselves of current regulations especially with respect to certain countries, of other agencies, particularly the Office of Defense Trade Controls, Department of State (with respect to Arms, Munitions and Implements of War (22 CFR 121-128)); the Bureau of Industry and Security, Department of Commerce (15 CFR parts 730-774); the Office of Foreign AssetsControl, Department of Treasury (31 CFR Parts 500+) and the Department of Energy.

NOT GRANTED

No license under 35 U.S.C. 184 has been granted at this time, if the phrase "IF REQUIRED, FOREIGN FILING LICENSE GRANTED" DOES NOT appear on this form. Applicant may still petition for a license under 37 CFR 5.12, if a license is desired before the expiration of 6 months from the filing date of the application. If 6 months has lapsed from the filing date of this application and the licensee has not received any indication of a secrecy order under 35 U.S.C. 181, the licensee may foreign file the application pursuant to 37 CFR 5.15(b).

UNITED STATES PATENT AND TRADEMARK OFFICE

Commissioner for Patents
United States Patent and Trademark Office
P.O. Box 1450
Alexandria, VA 22313-1450
www.uspto.gov

DUANE MORRIS LLP - SAN DIEGO
101 WEST BROADWAY
SUITE 900
SAN DIEGO CA 92101-8285

MAILED

JAN 17 2012

OFFICE OF PETITIONS

In re Application of
Green, et al.
Application No. 11/985,717
Filed/Deposited: 15 November, 2007
Attorney Docket No. E3697-00093

DECISION

This is a decision on the petition filed on 23 September, 2011, supplemented with an amendment on 24 September, 2011, for revival of an application abandoned due to unintentional delay pursuant to 37 C.F.R. §1.137(b).

NOTE:

The record (including the petition filed on 23 September, 2011,) does not necessitate a finding that the delay between midnight 24 September, 2010 (the date of abandonment), and 23 September, 2011 (the date of the filing of grantable petition), was not unintentional.

Rather, the Patent and Trademark Office is relying in this matter on the duty of candor and good faith of Petitioner/Counsel Vicki G. Norton (Reg. No. 40,745) when accepting Petitioner's representation that the delay in filing the response was unintentional.[1]

The petition pursuant to 37 C.F.R. §1.137(b) is **GRANTED**.

[1] See Changes to Patent Practice and Procedure, 62 Fed. Reg. at 53160 and 53178, 1203 Off. Gaz. Pat. Office at 88 and 103 (responses to comments 64 and 109)(applicant obligated under 37 C.F.R. ' 10.18 to inquire into the underlying facts and circumstances when providing the statement required by 37 C.F.R. ' 1.137(b) to the Patent and Trademark Office).

Application No. 11/985,717

As to the Allegations
of Unintentional Delay

The requirements of a grantable petition pursuant to 37 C.F.R. §1.137(b) are the petition and fee therefor, a reply, a proper statement of unintentional delay under the regulation, and, where applicable, a terminal disclaimer and fee.

BACKGROUND

The record reflects as follows:

Petitioner failed to reply timely and properly to the non-final Office action mailed on 24 June, 2010, with reply due absent extension of time on or before 24 September, 2010.

The application went abandoned by operation of law after midnight 24 September, 2010.

The Office mailed a Notice of Abandonment on 19 January, 2011.

On 23 September, 2011, Petitioner filed, *inter alia*, a petition (with fee) pursuant to 37 C.F.R. §1.137(b) with a reply in the form of an amendment and statement of unintentional delay.

As noted above, the record (including the petition filed on 23 September, 2011,) does not necessitate a finding that the delay between midnight 24 September, 2010 (the date of abandonment), and 23 September, 2011 (the date of the filing of grantable petition), was not unintentional.

Rather, the Patent and Trademark Office is relying in this matter on the duty of candor and good faith of Petitioner/Counsel Vicki G. Norton (Reg. No. 40,745) when accepting Petitioner's representation that the delay in filing the response was unintentional.[2]

Petitioners' attentions always are directed to the guidance in the Commentary at MPEP §711.03(c) as to the showing regarding unintentional delay and a petition pursuant to 37 C.F.R. §1.137(b).

---

[2] See Changes to Patent Practice and Procedure, 62 Fed. Reg. at 53160 and 53178, 1203 Off. Gaz. Pat. Office at 88 and 103 (responses to comments 64 and 109)(applicant obligated under 37 C.F.R. ' 10.18 to inquire into the underlying facts and circumstances when providing the statement required by 37 C.F.R. ' 1.137(b) to the Patent and Trademark Office).

The availability of applications and application papers online to applicants/practitioners who diligently associate their Customer Number with the respective application(s) now provides an applicant/practitioner on-demand information as to events/transactions in an application.

Out of an abundance of caution, Petitioners always are reminded that those registered to practice and all others who make representations before the Office **must** inquire into the underlying facts of representations made to the Office and support averments with the appropriate documentation–since all owe to the Office the continuing duty to disclose.[3]

STATUTES, REGULATIONS

Congress has authorized the Commissioner to "revive an application if the delay is shown to the satisfaction of the Commissioner to have been "unavoidable." 35 U.S.C. §133 (1994). And the regulations at 37 C.F.R. §1.137(a) and (b) set forth the requirements for a Petitioner to revive a previously unavoidably or unintentionally, respectively, abandoned application.[4],[5]

Moreover, the Office has set forth in the Commentary at MPEP §711.03(c)(I) the showing and timeliness requirements for a proper showing for relief under 37 C.F.R. §1.181 in these matters.

Decisions on reviving abandoned applications on the basis of "unavoidable" delay have adopted the reasonably prudent person standard in determining if the delay was unavoidable:

> The word 'unavoidable' . . . is applicable to ordinary human affairs, and requires no more or greater care or diligence than is generally used and observed by prudent and careful men in relation to their most important business. It permits them in the exercise of this care to rely upon the ordinary and trustworthy agencies of mail and telegraph, worthy and reliable employees, and such other means and instrumentalities as are usually employed in such important business. If unexpectedly, or through the unforeseen fault or imperfection of these agencies

---

[3] See supplement of 17 June, 1999. The Patent and Trademark Office is relying on petitioner's duty of candor and good faith and accepting a statement made by Petitioner. See Changes to Patent Practice and Procedure, 62 Fed. Reg. at 53160 and 53178, 1203 Off. Gaz. Pat. Office at 88 and 103 (responses to comments 64 and 109)(applicant obligated under 37 C.F.R. §11.18, formerly §10.18, to inquire into the underlying facts and circumstances when providing statements to the Patent and Trademark Office).

[4] See: Changes to Patent Practice and Procedure; Final Rule Notice, 62 Fed. Reg. at 53158-59 (October 10, 1997), 1203 Off. Gaz. Pat. Office at 86-87 (October 21, 1997).

[5] The language of 35 U.S.C. §133 and 37 C.F.R. §1.137(a) is clear, unambiguous, and without qualification: the delay in tendering the reply to the outstanding Office action, as well as filing the first petition seeking revival, must have been unavoidable for the reply now to be accepted on petition. (Therefore, by example, an unavoidable delay in the payment of the Filing Fee might occur if a reply is shipped by the US Postal Service, but due to catastrophic accident, the delivery is not made.) Delays in responding properly raise the question whether delays are unavoidable. Where there is a question whether the delay was unavoidable, Petitioners must meet the burden of establishing that the delay was unavoidable within the meaning of 35 U.S.C. §133 and 37 C.F.R. §1.137(a) And the Petitioner must be diligent in attending to the matter. Failure to do so does not constitute the care required under Pratt, and so cannot satisfy the test for diligence and due care. (By contrast, unintentional delays are those that do not satisfy the very strict statutory and regulatory requirements of unavoidable delay, and also, by definition, are not intentional.))

> and instrumentalities, there occurs a failure, it may properly be said to be unavoidable, all other conditions of promptness in its rectification being present.[6]

As to Allegations of
Unintentional Delay

The requirements of a grantable petition pursuant to 37 C.F.R. §1.137(b) are the petition and fee therefor, a reply, a proper statement of unintentional delay under the regulation, and, where applicable, a terminal disclaimer and fee.

It appears that the requirements under the rule have been satisfied.

CONCLUSION

Accordingly, the petition pursuant to 37 C.F.R. §1.137(b) is **granted**.

The instant application is released to the Technology Center/AU 1635 for further processing in due course.

Petitioner may find it beneficial to view Private PAIR within a fortnight of the instant decision to ensure that the revival has been acknowledged by the TC/AU in response to this decision. It is noted that all inquiries with regard to status need be directed to the TC/AU where that change of status must be effected—that does not occur in the Office of Petitions.

---

[6] In re Mattullath, 38 App. D.C. 497, 514-15 (1912)(quoting Ex parte Pratt, 1887 Dec. Comm'r Pat. 31, 32-33 (1887)); see also Winkler v. Ladd, 221 F. Supp. 550, 552, 138 USPQ 666, 167-68 (D.D.C. 1963), aff'd, 143 USPQ 172 (D.C. Cir. 1963); Ex parte Henrich, 1913 Dec. Comm'r Pat. 139, 141 (1913). In addition, decisions on revival are made on a "case-by-case basis, taking all the facts and circumstances into account." Smith v. Mossinghoff, 671 F.2d 533, 538, 213 USPQ 977, 982 (D.C. Cir. 1982). Finally, a petition cannot be granted where a petitioner has failed to meet his or her burden of establishing that the delay was "unavoidable." Haines v. Quigg, 673 F. Supp. 314, 316-17, 5 USPQ2d 1130, 1131-32 (N.D. Ind. 1987).

Telephone inquiries regarding this decision may be directed to the undersigned at (571) 272-3214—it is noted, however , that all practice before the Office is in writing (see: 37 C.F.R. §1.2[7]) and the proper authority for action on any matter in this regard are the statutes (35 U.S.C.), regulations (37 C.F.R.) and the commentary on policy (MPEP). Therefore, no telephone discussion may be controlling or considered authority for Petitioner's action(s).

/John J. Gillon, Jr./
John J. Gillon, Jr.
Senior Attorney
Office of Petitions

[7] The regulations at 37 C.F.R. §1.2 provide:
§1.2 Business to be transacted in writing.
All business with the Patent and Trademark Office should be transacted in writing. The personal attdance of applicants or their attorneys or agents at the Patent and Trademark Office is unnecessary. The action of the Patent and Trademark Office will be based exclusively on the written record in the Office. No attention will be paid to any alleged oral promise, stipulation, or understanding in relation to which there is disagreement or doubt.

UNITED STATES PATENT AND TRADEMARK OFFICE

Commissioner for Patents
United States Patent and Trademark Office
P.O. Box 1450
Alexandria, VA 22313-1450
www.uspto.gov

WILSON, SONSINI, GOODRICH & ROSATI
650 PAGE MILL ROAD
PALO ALTO CA 94304-1050

MAILED

OCT 01 2010

OFFICE OF PETITIONS

In re Application of
Hanafi Tanojo et al.
Application No. 11/985,806
Filed: November 16, 2007
Attorney Docket No. 31310-701.501

DECISION ON PETITION
TO WITHDRAW
FROM RECORD

This is a decision on the Request to Withdraw as attorney or agent of record under 37 CFR § 1.36(b), filed September 9, 2010.

The request is **NOT APPROVED**.

The request cannot be approved because it lacks the name of the first inventor or the assignee of record that is associated with the address listed in the request. Therefore, the change of correspondence address is considered improper.

The Office will only accept correspondence address changes to the most current address information provided for the assignee of the entire interest *who properly became of record under 37 CFR 3.71,* or, if no assignee of the entire interest has properly been made of record, the most current address information provided for the first named inventor. 37 CFR 3.71(c) states:

> *An assignee becomes of record either in a national patent application or a reexamination proceeding by filing a statement in compliance with § 3.73(b) that is signed by a party who is authorized to act on behalf of the assignee.*

The assignee must establish its ownership of the patent to the satisfaction of the Director. In this regard, the statement under 37 CFR 3.73(b) must have either: (i) documentary evidence of a chain of title from the original owner to the assignee (*e.g.*, copy of an executed assignment), and a statement affirming that the documentary evidence of the chain of title from the original owner to the assignee was or concurrently is being submitted for recordation pursuant to § 3.11; or (ii) a statement specifying where documentary evidence of a chain of title from the original owner to the assignee is recorded in the assignment records of the Office (*e.g.*, reel and frame number).

All future communications from the Office will continue to be directed to the above-listed address until otherwise notified by applicant.

Telephone inquires concerning this decision should be directed to the undersigned at 571-272-4584.

/JoAnne Burke/
JoAnne Burke
Petitions Examiner
Office of Petitions

UNITED STATES PATENT AND TRADEMARK OFFICE

Commissioner for Patents
United States Patent and Trademark Office
P.O. Box 1450
Alexandria, VA 22313-1450
www.uspto.gov

MAILED

NOV 29 2010

OFFICE OF PETITIONS

WILSON, SONSINI, GOODRICH & ROSATI
650 PAGE MILL ROAD
PALO ALTO CA 94304-1050

In re Application of
Hanafi Tanojo et al.
Application No. 11/985,806
Filed: November 16, 2007
Attorney Docket No. **31310-701.501**

DECISION ON PETITION
TO WITHDRAW
FROM RECORD

This is a decision on the renewed Request to Withdraw as attorney or agent of record under 37 CFR § 1.36(b), filed November 11, 2010.

The request is **APPROVED**.

A grantable request to withdraw as attorney/agent of record must be signed by every attorney/agent seeking to withdraw or contain a clear indication that one attorney is signing on behalf of another/others. The Office requires the practitioner(s) requesting withdrawal to certify that he, she, or they have: (1) given reasonable notice to the client, prior to the expiration of the response period, that the practitioner(s) intends to withdraw from employment; (2) delivered to the client or a duly authorized representative of the client all papers and property (including funds) to which the client is entitled; and (3) notified the client of any responses that may be due and the time frame within which the client must respond , pursuant to 37 CFR 10.40.

The request was signed by U.P. Peter Eng on behalf of all attorneys of record who are associated with Customer Number 21971.

All attorneys/agents associated with Customer Number 21971 have been withdrawn.

Applicant is reminded that there is no attorney of record at this time.

The correspondence address of record has been changed and all future correspondence will be directed to the first named inventor Hanafi Tanojo at the address indicated below.

There is no outstanding Office action mailed that requires a reply from the applicant.

Telephone inquiries concerning this decision should be directed to the undersigned at 571-272-4584.

/JoAnne Burke/
JoAnne Burke
Petitions Examiner
Office of Petitions

cc: Hanafi Tanojo
GenePharm, Inc.
c/o Xinfan Huang
1237 Midas Way
San Jose, CA 94074

UNITED STATES PATENT AND TRADEMARK OFFICE

UNITED STATES DEPARTMENT OF COMMERCE
United States Patent and Trademark Office
Address: COMMISSIONER FOR PATENTS
P.O. Box 1450
Alexandria, Virginia 22313-1450
www.uspto.gov

APPLICATION NUMBER	FILING OR 371(C) DATE	FIRST NAMED APPLICANT	ATTY. DOCKET NO./TITLE
11/985,806	11/16/2007	Hanafi Tanojo	31310-701.501

CONFIRMATION NO. 9264

POWER OF ATTORNEY NOTICE

21971
WILSON, SONSINI, GOODRICH & ROSATI
650 PAGE MILL ROAD
PALO ALTO, CA 94304-1050

OC000000044697914

Date Mailed: 11/29/2010

NOTICE REGARDING CHANGE OF POWER OF ATTORNEY

This is in response to the Power of Attorney filed 11/11/2010.

- The withdrawal as attorney in this application has been accepted. Future correspondence will be mailed to the new address of record. 37 CFR 1.33.

/jlburke/

Office of Data Management, Application Assistance Unit (571) 272-4000, or (571) 272-4200, or 1-888-786-0101

UNITED STATES PATENT AND TRADEMARK OFFICE

Commissioner for Patents
United States Patent and Trademark Office
P.O. Box 1450
Alexandria, VA 22313-1450
www.uspto.gov

MAILED
AUG 03 2011
OFFICE OF PETITIONS

CHRISTIE PARKER & HALE LLP
P.O. BOX 7068
PASADENA CA 91109-7068

In re Patent No. 7,786,444	:	
Issue Date: August 31, 2010	:	
Application No. 11/985,820	:	NOTICE
Filed: November 16, 2007	:	
Attorney Docket No. 60906-G517		

This is a notice regarding your request for acceptance of a fee deficiency submission under 37 CFR 1.28. On September 1, 1998, the Court of Appeals for the Federal Circuit held that 37 CFR 1.28(c) is the sole provision governing the time for correction of the erroneous payment of the issue fee as a small entity. **See DH Technology v. Synergystex International, Inc. 154 F.3d 1333, 47 USPQ2d 1865 (Fed. Cir. Sept. 1, 1998).**

The Office no longer investigates or rejects original or reissue applications under 37 CFR 1.56. **1098 Off. Gaz. Pat. Office 502 (January 3, 1989)**. Therefore, nothing in this Notice is intended to imply that an investigation was done.

Your fee deficiency submission under 37 CFR 1.28 is hereby **ACCEPTED**.

Inquiries related to this communication should be directed to Irvin Dingle at (571) 272-3210.

Irvin Dingle
Petitions Examiner
Office of Petitions

UNITED STATES PATENT AND TRADEMARK OFFICE

UNITED STATES DEPARTMENT OF COMMERCE
United States Patent and Trademark Office
Address: COMMISSIONER FOR PATENTS
P.O. Box 1450
Alexandria, Virginia 22313-1450
www.uspto.gov

APPLICATION NO.	FILING DATE	FIRST NAMED INVENTOR	ATTORNEY DOCKET NO.	CONFIRMATION NO.
11/985,836	11/16/2007	Robb Krumlauf	C065272/0209917	9020

83421 7590 03/07/2011
Bryan Cave LLP
1290 Avenue of the Americas
New York, NY 10104

EXAMINER
PAK, MICHAEL D

ART UNIT	PAPER NUMBER
1646	

MAIL DATE	DELIVERY MODE
03/07/2011	PAPER

Please find below and/or attached an Office communication concerning this application or proceeding.

The time period for reply, if any, is set in the attached communication.

UNITED STATES PATENT AND TRADEMARK OFFICE

Commissioner for Patents
United States Patent and Trademark Office
P.O. Box 1450
Alexandria, VA 22313-1450
www.uspto.gov

March 4, 2011

Bryan Cave LLP
1290 Avenue of the Americas
New York NY 10104

In re Application of	:	
Robb Krumlauf, et al	:	**DECISION ON PETITION**
Application No. 11985836	:	
Filed: 11/16/2007	:	
Attorney Docket No. **C065272/0209917**	:	

This is a decision on the Petition to Accept Color Drawings under 37 C.F.R 1.84 (a) (2), received in the United States Patent and Trademark Office (USPTO) November 16, 2007.

The petition is **DISMISSED.**

A grantable petition under 37 C.F.R. 1.84(a) (2) must be accompanied by the following.

1. The fee set forth under 37 C.F.R. 1.17(h),
2. Three (3) sets of the color drawings in question, (One (1) set for EFW filings, and
3. The specification containing the following language as the first paragraph in that portion of the specification relating to the brief description of the drawings

"The patent or application file contains at least one drawing executed in color. Copies of this patent or patent application publication with color drawing(s) will be provided by the Office upon request and payment of the necessary fee."

The petition did not meet the following requirement(s). 1 ☐ 2 ☑ 3 ☐

A renewed petition filed under 37 C.F.R. 1.84 (a) (2) must be filed within TWO (2) MONTHS of this decision. If a renewed petition is not filed within the TWO (2) Months of this decision the drawings will be printed in black and white.

Telephone inquires relating to this decision may be directed to the undersigned in the Office of Data Management at 571-272-4200.

/Laura L. Feldman/
Quality Control Specialist
Office of Data Management
Publications Branch

UNITED STATES PATENT AND TRADEMARK OFFICE

UNITED STATES DEPARTMENT OF COMMERCE
United States Patent and Trademark Office
Address: COMMISSIONER FOR PATENTS
P.O. Box 1450
Alexandria, Virginia 22313-1450
www.uspto.gov

APPLICATION NO.	FILING DATE	FIRST NAMED INVENTOR	ATTORNEY DOCKET NO.	CONFIRMATION NO.
11/985,836	11/16/2007	Robb Krumlauf	C065272/0209917	9020

7590 05/13/2011

Bryan Cave LLP
1290 Avenue of the Americas
New York, NY 10104

EXAMINER
PAK, MICHAEL D

ART UNIT	PAPER NUMBER
1646	

MAIL DATE	DELIVERY MODE
05/13/2011	PAPER

ACKNOWLEDGEMENT OF REQUEST

Notice of Allowance/Allowability Mailed

The request to print a color drawing reference as the first paragraph in the portion of the specification containing a brief description of the drawings as required by 37 CFR 1.84 and MPEP § 608.02 has been received by the United States Patent and Trademark Office and will be entered into the specification.

571-272-4200 or 1-888-786-0101
Application Assistance Unit
Office of Data Management

FORM PTOM327-5 (Rev. 02/08)

UNITED STATES PATENT AND TRADEMARK OFFICE

Commissioner for Patents
United States Patent and Trademark Office
P.O. Box 1450
Alexandria, VA 22313-1450
www.uspto.gov

May 12, 2011

Bryan Cave LLP
1290 Avenue of the Americas
New York NY 10104

In re Application of	:	
Robb Krumlauf, et al	:	**DECISION ON PETITION**
Application No. 11985836	:	
Filed: 11/16/2007	:	***ACCEPTANCE OF COLOR***
Attorney Docket No. **C065272/0209917**	:	***DRAWINGS***

This is a decision on the Petition to Accept Color Drawings under 37 C.F.R 1.84 (a) (2), received in the United States Patent and Trademark Office (USPTO) April 25, 2011.

The petition is **GRANTED**.

A grantable petition under 37 C.F.R. 1.84(a) (2) must be accompanied by the following.

1. The fee set forth under 37 C.F.R. 1.17(h),
2. Three (3) sets of the color drawings in question, or (1) set if filed via EFS, and
3. The specification contains appropriate language referring to the color drawings as the first paragraph in that portion of the specification relating to the brief description of the drawings.

The petition was accompanied by all of the required fees and drawings. The specification contains the appropriate language. Therefore, the petition is GRANTED.

Telephone inquires relating to this decision may be directed to the undersigned in the Office of Data Management at 571-272-4200.

/Laura Feldman/
Quality Control Specialist
Office of Data Management
Publications Branch

UNITED STATES PATENT AND TRADEMARK OFFICE

Commissioner for Patents
United States Patent and Trademark Office
P.O. Box 1450
Alexandria, VA 22313-1450
www.uspto.gov

WILLIAM W. JONES
6 JUNIPER LANE
MADISON, CT 06443

MAILED
JUN 17 2011
OFFICE OF PETITIONS

In re Application of :
Michael D. Cecchi :
Application No. 11/985,845 :
Filed: November 19, 2007 :
Attorney Docket No. H-1397 :

ON PETITION

This is a decision on the petition filed May 19, 2011 under 37 CFR 1.137(b), to revive the above-identified application.

The petition is **GRANTED.**

The above-identified application became abandoned for failure to submit the Issue fee and Publication Fee in a timely manner in reply to the Notice of Allowance mailed January 24, 2011, which set a statutory period for reply of three (3) months. Accordingly, the above-identified application became abandoned on April 25, 2011.

The petition satisfies the conditions for revival pursuant to the provisions of 37 CFR 1.137(b) in that (1) the reply in the form of payment of the Issue fee and Publication Fee; (2) the petition fee; (3) the required statement of unintentional delay have been received. Accordingly, the issue fee is accepted as having been unintentionally delayed.

37 CFR 1.137(b)(3) requires a statement that "the entire delay in filing the required reply from the due date for the reply until the filing of a grantable petition pursuant to 37 CFR 1.137(b) was unintentional." Since the statement appearing in the petition varies from the language required by 37 CFR 1.137(b)(3), the statement is being construed as the required statement. Petitioner must notify the Office if this is **not** a correct reading of the statement appearing in the petition.

Telephone inquiries concerning this decision should be directed to the undersigned at (571) 272-3210.

This matter is being referred to the Office of Data Management for further processing.

Irvin Dingle
Petitions Examiner
Office of Petitions

UNITED STATES PATENT AND TRADEMARK OFFICE

UNITED STATES DEPARTMENT OF COMMERCE
United States Patent and Trademark Office
Address: COMMISSIONER FOR PATENTS
P.O. Box 1450
Alexandria, Virginia 22313-1450
www.uspto.gov

APPLICATION NO.	FILING DATE	FIRST NAMED INVENTOR	ATTORNEY DOCKET NO.	CONFIRMATION NO.
11/985,980	11/19/2007	Yoichiro Sako	S1459.70398US00	1121

7590 09/01/2010
WOLF GREENFIELD & SACKS, P.C.
600 ATLANTIC AVENUE
BOSTON, MA 02210-2206

EXAMINER
SALOMON, PHENUEL S

ART UNIT	PAPER NUMBER
2179	

MAIL DATE	DELIVERY MODE
09/01/2010	PAPER

DECISION GRANTING PETITION UNDER 37 CFR 1.138(d)

The declaration of express abandonment is recognized

This is in response to the petition under 37 CFR 1.138(d), requesting for a refund of any previously paid search fee and excess claims fee in the above-identified application.

The petition is granted.

The express abandonment is recognized. Any previously paid search fee and excess claims fee are hereby refunded.

Telephone inquiries should be directed to the Office of Data Management at (571) 272-4200.

Mimi Farmer

Patent Publication Branch
Office of Data Management

Adjustment date: 09/01/2010 MFARMER
11/21/2007 RSEBRAHT 00000012 11985980
02 FC:1111 -510.00 OP
04 FC:1201 -210.00 OP

FORM PET651G (Rev. 08/07)

UNITED STATES PATENT AND TRADEMARK OFFICE

UNITED STATES DEPARTMENT OF COMMERCE
United States Patent and Trademark Office
Address: COMMISSIONER FOR PATENTS
P.O. Box 1450
Alexandria, Virginia 22313-1450
www.uspto.gov

APPLICATION NO.	FILING DATE	FIRST NAMED INVENTOR	ATTORNEY DOCKET NO.	CONFIRMATION NO.
11/985,994	11/19/2007	Douglas Brown	12655	1728

26890 7590 03/14/2011
JAMES M. STOVER
TERADATA CORPORATION
10000 INNOVATION DRIVE
DAYTON, OH 45342

EXAMINER
MYINT, DENNIS Y

ART UNIT	PAPER NUMBER
2162	

MAIL DATE	DELIVERY MODE
03/14/2011	PAPER

Please find below and/or attached an Office communication concerning this application or proceeding.

The time period for reply, if any, is set in the attached communication.

UNITED STATES PATENT AND TRADEMARK OFFICE

COMMISSIONER FOR PATENTS
UNITED STATES PATENT AND TRADEMARK OFFICE
P.O. BOX 1450
ALEXANDRIA, VA 22313-1450
www.uspto.gov

James M. Stover
Teradata Corporation
10000 Innovation Drive
Dayton, OH 45342

In re Application of:	)	
Douglas P. BROWN et al.	)	
Application No. 11/985,994	)	
Filed: November 19, 2007	)	**DECISION ON PETITION**
For: CLOSED-LOOP SYSTEM MANAGEMENT	)	**UNDER 37 CFR § 1.181**
METHOD AND PROCESS CAPABLE OF	)	
MANAGING WORKLOADS IN A MULTI-	)	
SYSTEM DATABASE ENVIRONMENT	)	

This is a decision on the Petition, filed on 17 February 2011, to Withdraw Finality of Office Action under 37 C.F.R. § 1.181.

The petition is **GRANTED**.

BACKGROUND

On 03 November 2010, applicant filed a RCE and an amendment to independent claims 1, 7 and 12.

On 18 November 2010, the examiner finally rejected all claims 1 - 16 in the first Office action immediately after filing a RCE.

On 17 February 2011, applicant filed a petition to withdraw the finality of Office Action mailed 18 November 2010.

RULES AND PROCEDURES

MPEP § 706.07(b) states in part that:

> The claims of a new application may be finally rejected in the first Office action in those situations where (A) the new application is a continuing application of, or a substitute for, an earlier application, and (B) all claims of the new application (1) are drawn to the same invention claimed in the earlier application, and (2) would have been properly finally

> rejected on the grounds and art of record in the next Office action if they had been entered in the earlier application ...

MPEP § 706.07(h)(VIII) states that:

> The action immediately subsequent to the filing of an RCE with a submission and fee under 37 CFR 1.114 may be made final only if the conditions set forth in MPEP § 706.07(b) for making a first action final in a continuing application are met.

DECISION

A review of the application file indicates that the limitations "created by the multi-system regulator" and "the system event monitor to perform an adjustment" and "concerning priorities and limits" have been added to independent claims 1, 7 and 12 and these claims would have been received a notice indicating "... require further search and/or consideration" if they were presented as an amendment after final Office action of 03 August 2010. Thus, claims 1-16 of 03 November 2010 are not drawn to the identical invention in the earlier amended claims submitted on 19 May 2010 and would be refused to enter by the examiner if they had been presented in the application prior to filing the RCE of 03 November 2010.

For the above stated reasons, the petition is **GRANTED**. The Office Action mailed on 18 November 2010 is been considered as a non-final Office Action.

It is noticed that amendment in responsive to the Office Action mailed on 18 November 2010 has been filed on 18 February 2011. Thus, the application has been forwarded to the examiner of record to examine the amendment of 18 February 2011 and to issue an appropriate Office communication.

Any inquiry concerning this decision should be directed to the undersigned whose telephone number is (571) 272-3613.

/Vincent N. Trans/
Vincent N. Trans, SPRE/QAS
Technology Center 2100
Computer Architecture and Software

UNITED STATES PATENT AND TRADEMARK OFFICE

Commissioner for Patents
United States Patent and Trademark Office
P.O. Box 1450
Alexandria, VA 22313-1450
www.uspto.gov

RAMINDA U. MADURAWE
SUITE-215
2975 SCOTT BLVD.
SANTA CLARA CA 95054

MAILED

AUG 16 2010

OFFICE OF PETITIONS

In re Application of	:	
Raminda Udaya Madurawe, et al.	:	
Application No. 11/986,022	:	ON PETITION
Filed: November 19, 2007	:	
Attorney Docket No. Madurawe050	:	

This is a decision on the petition under the unintentional provisions of 37 CFR 1.137(b), filed July 14, 2010, to revive the above-identified application.

The petition is **GRANTED**.

The application became abandoned for failure to timely file a reply within the meaning of 37 CFR 1.113 to the final Office action of December 28, 2009. The proposed reply required for consideration of a petition to revive must be a Notice of Appeal (and appeal fee required by 37 CFR 41.20(b)(2), an amendment that *prima facie* places the application in condition for allowance, a Request for Continued Examination and submission (37 CFR 1.114), or the filing of a continuing application under 37 CFR 1.53(b). See MPEP 711.03(c)(III)(A)(2). No extensions of time pursuant to the provisions of 37 CFR 1.136(a) were obtained. Accordingly, the date of abandonment of this application is March 29, 2010.

The petition satisfies the requirements of 37 CFR 1.137(b) in that petitioner has supplied (1) the reply in the form of a Request for Continued Examination (RCE) and fee of $405, and the submission required by 37 CFR 1.114; (2) the petition fee of $810; and (3) a proper statement of unintentional delay.

Telephone inquiries concerning this decision should be directed to the undersigned at Terri Johnson (571) 272-2991.

This application is being referred to Technology Center AU 2819 for processing of the RCE and for appropriate action by the Examiner in the normal course of business on the amendment submitted in accordance with 37 CFR 1.114.

Terri Johnson

Terri Johnson
Petitions Examiner
Office of Petitions

UNITED STATES PATENT AND TRADEMARK OFFICE

Commissioner for Patents
United States Patent and Trademark Office
P.O. Box 1450
Alexandria, VA 22313-1450
www.uspto.gov

RAMINDA U. MADURAWE
SUITE-215
2975 SCOTT BLVD.
SANTA CLARA CA 95054

MAILED

AUG 02 2010

OFFICE OF PETITIONS

In re Application of :
Raminda Udaya Madurawe :
Application No. 11/986,023 : ON PETITION
Filed: November 19, 2007 :
Attorney Docket No. Madurawe051 :

This is a decision on the petition under the unintentional provisions of 37 CFR 1.137(b), filed July 14, 2010, to revive the above-identified application.

The petition is **DISMISSED**.

Any request for reconsideration of this decision must be submitted within TWO (2) MONTHS from the mail date of this decision. Extensions of time under 37 CFR 1.136(a) are permitted. The reconsideration request should include a cover letter entitled "Renewed Petition under 37 CFR 1.137(b)." This is **not** a final agency action within the meaning of 5 U.S.C. § 704.

The application became abandoned for failure to timely reply within the meaning of 37 CFR 1.113 to the final Office action, mailed January 13, 2010, which set a shortened statutory period for reply of three (3) months. No extensions of time under the provisions of 37 CFR 1.136(a) was obtained. Accordingly, the application became abandoned on April 14, 2010. The Notice of Abandonment was mailed July 21, 2010.

A grantable petition under 37 CFR 1.137(b) must be accompanied by: (1) the required reply, unless previously filed; (2) the petition fee as set forth in 37 CFR 1.17(m); (3) a statement that the entire delay in filing the required reply from the due date for the reply until the filing of a grantable petition pursuant to 37 CFR 1.137(b) was unintentional; and (4) any terminal disclaimer (and fee as set forth in 37 CFR 1.20(d)) required by 37 CFR 1.137(d). Where there is a question as to whether either the abandonment or the delay in filing a petition under 37 CFR 1.137 was unintentional, the Director may require additional information. See MPEP 711.03(c)(II)(C) and (D). The instant petition lacks item(s) (1).

The proposed reply required for consideration of a petition to revive must be a Notice of Appeal (and appeal fee required by 37 CFR 41.20(b)(2), an amendment that prima facie places the application in condition for allowance, a Request for Continued Examination and submission (37 CFR 1.114), or the filing of a continuing application under 37 CFR 1.53(b). See MPEP 711.03(c)(III)(A)(2). The amendment filed herewith petition ***does not*** prima facie place the application in condition for allowance.

The application file does not indicate a change of address has been filed in this case, although the address given on the petition differs from the address of record. A change of address should be filed in this case in accordance with MPEP 601.03. A courtesy copy of this decision is being mailed to the address noted on the petition. However, until otherwise instructed, all future correspondence regarding this application will be mailed solely to the address of record.

Further correspondence with respect to this matter should be addressed as follows:

By Mail: Mail Stop PETITION
Commissioner for Patents
P. O. Box 1450
Alexandria, VA 22313-1450

By hand: U. S. Patent and Trademark Office
Customer Service Window, Mail Stop Petitions
Randolph Building
401 Dulany Street
Alexandria, VA 22314

The centralized facsimile number is **(571) 273-8300.**

Telephone inquiries concerning this decision should be directed to the undersigned at (571) 272-2991.

Terri Johnson
Petitions Examiner
Office of Petitions

Enclosed: Examiner's Advisory Action PTOL-303

cc: **TRAN & ASSOCIATES**
PO BOX 68
SARATOGA, CA 95071

Advisory Action Before the Filing of an Appeal Brief	**Application No.** 11/986,023	**Applicant(s)** MADURAWE, RAMINDA UDAYA	
	Examiner Thomas L. Dickey	**Art Unit** 2826	

--The MAILING DATE of this communication appears on the cover sheet with the correspondence address --

THE REPLY FILED 14 July 2010 FAILS TO PLACE THIS APPLICATION IN CONDITION FOR ALLOWANCE.

1. ☒ The reply was filed after a final rejection, but prior to or on the same day as filing a Notice of Appeal. To avoid abandonment of this application, applicant must timely file one of the following replies: (1) an amendment, affidavit, or other evidence, which places the application in condition for allowance; (2) a Notice of Appeal (with appeal fee) in compliance with 37 CFR 41.31; or (3) a Request for Continued Examination (RCE) in compliance with 37 CFR 1.114. The reply must be filed within one of the following time periods:
   a) ☒ The period for reply expires 3 months from the mailing date of the final rejection.
   b) ☐ The period for reply expires on: (1) the mailing date of this Advisory Action, or (2) the date set forth in the final rejection, whichever is later. In no event, however, will the statutory period for reply expire later than SIX MONTHS from the mailing date of the final rejection.

   Examiner Note: If box 1 is checked, check either box (a) or (b). ONLY CHECK BOX (b) WHEN THE FIRST REPLY WAS FILED WITHIN TWO MONTHS OF THE FINAL REJECTION. See MPEP 706.07(f).

Extensions of time may be obtained under 37 CFR 1.136(a). The date on which the petition under 37 CFR 1.136(a) and the appropriate extension fee have been filed is the date for purposes of determining the period of extension and the corresponding amount of the fee. The appropriate extension fee under 37 CFR 1.17(a) is calculated from: (1) the expiration date of the shortened statutory period for reply originally set in the final Office action; or (2) as set forth in (b) above, if checked. Any reply received by the Office later than three months after the mailing date of the final rejection, even if timely filed, may reduce any earned patent term adjustment. See 37 CFR 1.704(b).

NOTICE OF APPEAL

2. ☐ The Notice of Appeal was filed on _____. A brief in compliance with 37 CFR 41.37 must be filed within two months of the date of filing the Notice of Appeal (37 CFR 41.37(a)), or any extension thereof (37 CFR 41.37(e)), to avoid dismissal of the appeal. Since a Notice of Appeal has been filed, any reply must be filed within the time period set forth in 37 CFR 41.37(a).

AMENDMENTS

3. ☒ The proposed amendment(s) filed after a final rejection, but prior to the date of filing a brief, will not be entered because
   (a) ☒ They raise new issues that would require further consideration and/or search (see NOTE below);
   (b) ☒ They raise the issue of new matter (see NOTE below);
   (c) ☐ They are not deemed to place the application in better form for appeal by materially reducing or simplifying the issues for appeal; and/or
   (d) ☐ They present additional claims without canceling a corresponding number of finally rejected claims.

   NOTE: *See Continuation Sheet*. (See 37 CFR 1.116 and 41.33(a)).
4. ☐ The amendments are not in compliance with 37 CFR 1.121. See attached Notice of Non-Compliant Amendment (PTOL-324).
5. ☐ Applicant's reply has overcome the following rejection(s): _____.
6. ☐ Newly proposed or amended claim(s) _____ would be allowable if submitted in a separate, timely filed amendment canceling the non-allowable claim(s).
7. ☐ For purposes of appeal, the proposed amendment(s): a) ☐ will not be entered, or b) ☐ will be entered and an explanation of how the new or amended claims would be rejected is provided below or appended.
   The status of the claim(s) is (or will be) as follows:
   Claim(s) allowed: _____.
   Claim(s) objected to: _____.
   Claim(s) rejected: _____.
   Claim(s) withdrawn from consideration: _____.

AFFIDAVIT OR OTHER EVIDENCE

8. ☐ The affidavit or other evidence filed after a final action, but before or on the date of filing a Notice of Appeal will not be entered because applicant failed to provide a showing of good and sufficient reasons why the affidavit or other evidence is necessary and was not earlier presented. See 37 CFR 1.116(e).
9. ☐ The affidavit or other evidence filed after the date of filing a Notice of Appeal, but prior to the date of filing a brief, will not be entered because the affidavit or other evidence failed to overcome all rejections under appeal and/or appellant fails to provide a showing a good and sufficient reasons why it is necessary and was not earlier presented. See 37 CFR 41.33(d)(1).
10. ☐ The affidavit or other evidence is entered. An explanation of the status of the claims after entry is below or attached.

REQUEST FOR RECONSIDERATION/OTHER

11. ☐ The request for reconsideration has been considered but does NOT place the application in condition for allowance because: _____.
12. ☐ Note the attached Information *Disclosure Statement*(s). (PTO/SB/08) Paper No(s). _____
13. ☐ Other: _____.

/Thomas L Dickey/
Primary Examiner, Art Unit 2826

Continuation of 3. NOTE: The proposed amendments to claims 1, 11, and 18 would require that the first layer (or memory array, as recited in claim 18) be coupled to one or more pads ONLY through a circuit in the second layer (substrate, claim 18). This amounts to a requirement that there be no coupling between these elements except through said circuit.
Nothing in the application as filed would have conveyed to one skilled in the art that Applicant was in possession of an invention that REQUIRED that there be NO coupling between said elements except through said circuit. On the contrary, the application as filed would have suggested (through its silence on this subject) that other forms of coupling are optional.
Furthermore, to examine an invention including this requirement would require search and consideration not previously performed.

UNITED STATES PATENT AND TRADEMARK OFFICE

Commissioner for Patents
United States Patent and Trademark Office
P.O. Box 1450
Alexandria, VA 22313-1450
www.uspto.gov

MAILED
SEP 02 2010
OFFICE OF PETITIONS

RAMINDA U. MADURAWE
SUITE-215
2975 SCOTT BLVD.
SANTA CLARA CA 95054

In re Application of	:	
Raminda U. Madurawe	:	
Application No. 11/986,023	:	ON PETITION
Filed: November 19, 2007	:	
Attorney Docket No. Madurawe051	:	

This is a decision on the renewed petition under the unintentional provisions of 37 CFR 1.137(b), filed August 23, 2010, to revive the above-identified application.

The petition is **GRANTED**.

The application became abandoned for failure to timely file a reply within the meaning of 37 CFR 1.113 to the final Office action of January 13, 2010. The proposed reply required for consideration of a petition to revive must be a Notice of Appeal (and appeal fee required by 37 CFR 41.20(b)(2), an amendment that *prima facie* places the application in condition for allowance, a Request for Continued Examination and submission (37 CFR 1.114), or the filing of a continuing application under 37 CFR 1.53(b). See MPEP 711.03(c)(III)(A)(2). No extensions of time pursuant to the provisions of 37 CFR 1.136(a) were obtained. Accordingly, the date of abandonment of this application is April 14, 2010. The Notice of Abandonment was mailed July 21, 2010.

The petition satisfies the requirements of 37 CFR 1.137(b) in that petitioner has supplied (1) the reply in the form of a Request for Continued Examination (RCE) and fee of $405, and the submission required by 37 CFR 1.114; (2) the petition fee of $810; and (3) a proper statement of unintentional delay.

It is not apparent whether the person signing the statement of unintentional delay was in a position to have firsthand or direct knowledge of the facts and circumstances of the delay at issue. Nevertheless, such statement is being treated as having been made as the result of a reasonable inquiry into the facts and circumstances of such delay. See 37 CFR 10.18(b) and Changes to Patent Practice and Procedure; Final Rule Notice, 62 Fed. Reg. 53131, 53178 (October 10, 1997), 1203 Off. Gaz. Pat. Office 63, 103 (October 21, 1997). In the event that such an inquiry has not been made, petitioner must make such an inquiry. If such inquiry results

in the discovery that it is not correct that the entire delay in filing the required reply from the due date for the reply until the filing of a grantable petition pursuant to 37 CFR 1.137(b) was unintentional, petitioner must notify the Office.

There is no indication that the person signing the petition was ever given a power of attorney to prosecute the application. If the person signing the petition desires to receive future correspondence regarding this application, the appropriate power of attorney document must be submitted. While a courtesy copy of this decision is being mailed to the person signing the petition, all future correspondence will be directed to the address currently of record until appropriate instructions are received.

Telephone inquiries concerning this decision should be directed to the undersigned at (571) 272-2991.

This application is being referred to Technology Center AU 2826 for processing of the RCE and for appropriate action by the Examiner in the normal course of business on the amendment submitted in accordance with 37 CFR 1.114.

Terri Johnson

Terri Johnson
Petitions Examiner
Office of Petitions

cc: **TRAN & ASSOCIATES**
P.O. Box 68
Saratoga, CA 95071

UNITED STATES PATENT AND TRADEMARK OFFICE

Commissioner for Patents
United States Patent and Trademark Office
P.O. Box 1450
Alexandria, VA 22313-1450
www.uspto.gov

RAMINDA U. MADURAWE
SUITE-215
2975 SCOTT BLVD.
SANTA CLARA CA 95054

MAILED

SEP 08 2010

OFFICE OF PETITIONS

In re Application of	:	
Raminda Udaya Madurawe	:	
Application No. 11/986,024	:	DECISION ON PETITION
Filed: November 19, 2007	:	
Attorney Docket No. MADURAWE052	:	

This is a decision on the petition under the unintentional provisions of 37 CFR 1.137(b), filed July 12, 2010, to revive the above-identified application.

The petition is **GRANTED**.

This application became abandoned for failure to timely to submit Corrected Drawings on or before March 23, 2010, as required by the Notice of Allowance and Fee(s) Due and the Notice of Allowability, mailed December 23, 2009. Accordingly, the date of abandonment of this application is March 24, 2010. A Notice of Abandonment was mailed April 8, 2010.

The petition satisfies the requirements of 37 CFR 1.137(b) in that petitioner has supplied (1) Corrected Drawings, (2) the petition fee of $810.00; and (3) a proper statement of unintentional delay.

Further, 37 CFR 1.137(b)(3) requires a statement that "the entire delay in filing the required reply from the due date for the reply until the filing of a grantable petition pursuant to 37 CFR 1.137(b) was unintentional." Since the statement appearing in the petition varies from the language required by 37 CFR 1.137(b)(3), the statement is being construed as the required statement. Petitioner must notify the Office if this is **not** a correct reading of the statement appearing in the petition.

Additionally, it is not apparent whether the statement of unintentional delay was signed by a person who would have been in a position of knowing that the **entire** delay in filing the required reply from the due date for the reply until the filing of a grantable petition pursuant to 37 CFR 1.137(b) was unintentional. Nevertheless, in accordance with 37

CFR 10.18, the statement is accepted as constituting a certification of unintentional delay. However, in the event that petitioner has no knowledge that the delay was unintentional, petitioner must make such an inquiry to ascertain that, in fact, the delay was unintentional. If petitioner discovers that the delay was intentional, petitioner must notify the Office. Further, it is not apparent whether the person signing the instant petition was ever given a power of attorney or authorization of agent to prosecute this application. In accordance with 37 CFR 1.34(a), the signature of appearing on the petition shall constitute a representation to the United States Patent and Trademark Office that he/she is authorized to represent the particular party in whose behalf he/she acts. Additionally, the address given on the petition differs from the address of record. A courtesy copy of this decision is being mailed to the address given on the petition; however, the Office will mail all future correspondence solely to the address of record.

Telephone inquiries concerning this decision should be directed to the undersigned at (571) 272-7751.

This application is being referred to Publishing Division for processing into a patent and review of the Corrected Drawings submitted with the instant petition.

Joan Olszewski

Joan Olszewski
Petitions Examiner
Office of Petitions

cc: Bao Tran
Tran & Associates
PO Box 68
Saratoga, CA 95071

MAILED

MAR 2 1 2012

PCT LEGAL ADMINISTRATION

UNITED STATES PATENT AND TRADEMARK OFFICE

Commissioner for Patents
United States Patent and Trademark Office
P.O. Box 1450
Alexandria, VA 22313-1450
www.uspto.gov

KLARQUIST SPARKMAN, LLP
121 SW SALMON STREET
SUITE 1600
PORTLAND OR 97204

In re Application of: SUMMER, John, D.
U.S. Application No.: 11/986,044
PCT No.: PCT/US2006/019759
International Filing Date: 18 May 2006
Priority Date: 19 May 2005
Attorney's Docket No.: 1754-7401201
For: TONGUE GRASPING AND RESTRAINING APPARATUS AND METHODS

DECISION ON PETITION UNDER 37 CFR 1.181

This decision is issued in response to applicants' "Petition Under 37 C.F.R. § 1.181" filed on 01 February 2012. No petition fee is required.

BACKGROUND

On 18 May 2006, applicant filed international application PCT/US2006/019759. The application claimed a priority date of 19 May 2005, and it designated the United States. The deadline for requesting entry into the national stage in the United States and payment of the basic national fee was thirty months from the priority date, i.e., 19 November 2007.

On 17 November 2007, applicants filed materials to initiate the present application. The submission included the following materials: Form PTO-1390 Transmittal Letter for entry into the national stage under 35 U.S.C. 371, Express Mail Cover Letter, two different descriptions (one of which appears to correspond to the published international application), two sets of claims,[1] one set of drawings, an abstract, a partial declaration, and a fee payment (including payment of the basic national fee). The Form PTO-1390 Transmittal Letter identified the application as the U.S. national stage of PCT/US2006/019759. The submission did not include a preliminary amendment.

As indicated in the subsequently mailed filing receipt, the application was treated by the USPTO as a filing under 35 U.S.C. 111(a), rather than a national stage filing under 35 U.S.C. 371. The filing receipt issued herein did not list any domestic or foreign priority claims, and it indicated that the application contained 19 total claims.

[1] One set of claims contained 19 claims numbered 1-8 and 9-20, with an abstract added at the end. The other set of claims, which appears to correspond to the claims of record in the international application, contained 125 numbered claims.

On 06 July 2011, an Office Action containing a restriction requirement was issued. The restriction requirement was addressed to the claim set containing 19 claims. Applicant subsequently made an election in response to the restriction requirement.

On 29 April 2010, an Office Action was mailed containing a non-final rejection of the claims herein.

On 25 May 2011, an Office Action was mailed containing a final rejection of the claims herein.

On 26 September 2011, applicant filed a "Request For Continued Examination" (RCE) accompanied by, among other materials, an amendment seeking to add to the specification a statement identifying the present application as the national stage under 35 U.S.C. 371 of PCT/US2006/019759.

On 03 October 2011, applicant filed a "Request For Corrected Official Filing Receipt" seeking to add to the filing receipt claims of domestic priority directed to U.S. provisional applications 60/684,849, 60/720,650, and 60/758,603, the three provisional applications to which priority was claimed in the international application and in the first paragraph of the original specification filed herein.

On 19 October 2011, "Response To Réquest Corrected Filing Receipt" was issued rejecting applicant's request for a corrected filing receipt because the three provisional applications were filed more than twelve months before the filing date of the present application. The response also noted that the present application was improperly identified by applicant as a national stage application under 35 U.S.C. 371.

On 05 December 2011, applicant filed a second "Request For Corrected Official Filing Receipt" again requesting that priority claims to the three prior filed provisional applications be added to the present application. The submission argued that the present application was properly treated as a national stage application with an international filing date of 18 May 2006, a date less than twelve months later than the filing dates of the provisional applications.

On 20 December 2011, a second "Response To Request Corrected Filing Receipt" was issued again rejecting applicant's request for corrected filing receipt because the three provisional applications at issue were filed more than twelve months before the filing date of the present application.

On 01 February 2012, applicant filed the "Petition Under 37 C.F.R. § 1.181" considered herein. The petition argues that the present application is properly treated as the U.S. national stage of PCT/US2006/019759 filed under 35 U.S.C. 371 with proper claims of priority to the three prior-filed U.S. provisional applications.

DISCUSSION

Any intended filing of an international application as a national stage application must clearly and unambiguously be identified as such and must satisfy all of the conditions set forth in 35 U.S.C. 371(c). See 37 CFR 1.495(g):

> The documents and fees submitted ... must be clearly identified as a submission to enter the national stage under 35 U.S.C. 371, otherwise the submission will be considered as being made under 35 U.S.C. 111.

In addition, section 1893.03(a) of the MPEP states the following:

> If there are any conflicting instructions as to whether the filing is under 35 U.S.C. 111(a) or 35 U.S.C. 371, the application will be accepted as filed under 35 U.S.C. 111(a).

The Form PTO-1390 Transmittal Letter filed by applicant to initiate the present application expressly identified the application as the U.S. national stage of PCT/US2006/019759 filed under 35 U.S.C. 371. The initial application submission did not include any conflicting instructions that are inconsistent with the intent to enter the national stage under 35 U.S.C. 371. Accordingly, the present application is properly treated as a U.S. national stage filing under 35 U.S.C. 371, as asserted by applicants in the present petition.

With respect to the priority claims directed to the provisional applications, the specification included priority claims to provisional applications 60/684,849, 60/720,650, and 60/758,603, and these provisional applications were all filed within one year of the international filing date of PCT/US2006/019759. In addition, application numbers 60/684,849 and 60/758,603 both also have an inventor in common with the present application. However application number 60/720,650 does not have an inventor in common with the present application and therefore is not properly the subject of a priority claim herein.

Based on the above, any corrected filing receipt subsequently issued herein will set forth the domestic priority claims directed to U.S. provisional application numbers 60/684,849 and 60/758,603, but it will not include a claim directed to U.S. provisional application number 60/720,650.

Finally, a review of the application file reveals that an acceptable declaration in compliance with 37 CFR 1.497 has not been filed herein. Applicants' 17 November 2007 filing initiating the present application included an executed signature page for a Form PTO/SB/01 declaration document, but the remaining pages of the declaration were never submitted. Accordingly, applicants are required to file an acceptable oath or declaration in compliance with 37 CFR 1.497, along with the surcharge for filing the oath or declaration later than thirty months after the priority date.

CONCLUSION

Applicants' petition under 37 CFR 1.181 to have the present application treated as the U.S. national stage of PCT/US2006/019759 filed under 35 U.S.C. 371 is **GRANTED**.

In addition, any subsequent filing receipt issued herein will include priority claims directed to U.S. provisional applications 60/684,849 and 60/758,603. However, for the reasons discussed above, the priority claim directed to U.S. provisional application 60/720,650 is improper and will not be listed on the priority receipt.

As also noted above, an oath or declaration in compliance with 37 CFR 1.497 has not been filed herein. Accordingly, applicants have **TWO (2) MONTHS** from the mail date of the present decision to file a proper response consisting of an oath or declaration in compliance with 37 CFR 1.497 and the surcharge for filing the acceptable oath or declaration later than thirty months after the priority date.

Failure to file a timely and proper response to this decision will result in abandonment of the application. Extensions of time are available under 37 CFR 1.136(a).

Upon receipt of an acceptable oath or declaration and the required surcharge, the application will be referred to the National Stage Processing Branch of the Office of PCT Operations for further processing, including the mailing of a "Notification Of Acceptance" (Form PCT/DO/EO/903) and a corrected filing receipt.

Any further correspondence with respect to this matter may be filed electronically via EFS-Web selecting the document description "Petition for review and processing by the PCT Legal Office" or by mail addressed to Mail Stop PCT, Commissioner for Patents, Office of PCT Legal Administration, P.O. Box 1450, Alexandria, Virginia 22313-1450, with the contents of the letter marked to the attention of the Office of PCT Legal Administration.

/RichardMRoss/

Richard M. Ross
Attorney Advisor
Office of PCT Legal Administration
Telephone: (571) 272-3296

SPE RESPONSE FOR CERTIFICATE OF CORRECTION

Paper No.: _____

DATE : 08-27-2010

TO SPE OF : ART UNIT 2857

SUBJECT : Request for Certificate of Correction for Appl. No: 11986113 Patent No: 7769559

Please respond to this request for a certificate of correction within 7 days.

FOR IFW FILES:

Please review the requested changes/corrections as shown in the **COCIN** document(s) in the IFW application image. No new matter should be introduced, nor should the scope or meaning of the claims be changed.

Please complete the response (see below) and forward the completed response to scanning using document code **COCX**.

FOR PAPER FILES:

Please review the requested changes/corrections as shown in the attached certificate of correction. Please complete this form (see below) and forward it with the file to:

Certificates of Correction Branch (Co f C)
Randolph Square – 9D10-A
Palm Location 7580

Should priority be entered?

Eva James
Certificates of Correction Branch
703-756-1583 _____

Thank You For Your Assistance

The request for issuing the above-identified correction(s) is hereby:
Note your decision on the appropriate box.

- [x] **Approved** — **All** changes apply.
- [ ] **Approved in Part** — Specify below which changes **do not** apply.
- [ ] **Denied** — State the reasons for denial below.

APPROVED.

/Andrew Schechter/ 2857
SPE **Art Unit**

UNITED STATES PATENT AND TRADEMARK OFFICE

Commissioner for Patents
United States Patent and Trademark Office
P.O. Box 1450
Alexandria, VA 22313-1450
www.uspto.gov

CHAN LAW GROUP LLP
1055 W. 7TH ST,
SUITE 1880
LOS ANGELES, CA 90017

MAILED

JAN 3 1 2011

OFFICE OF PETITIONS

In re Application of	:	
SUN, Anita et al	:	
Application No. 11/986,148	:	DECISION ON PETITION
Filed: November 19, 2007	:	TO WITHDRAW
Attorney Docket No. **1011.101**	:	FROM RECORD
	:	

This is a decision on the Request to Withdraw as attorney or agent under 37 C.F.R. § 1.36(b) or 37 C.F.R. § 10.40 filed December 20, 2010.

The request is **NOT APPROVED**.

A review of the file record indicates that Customer Number 26129 does not have power of attorney in this patent. Accordingly, the request to withdraw under 37 C.F.R. § 1.36(b) is not applicable.

All future communications from the Office will continue to be directed to the below-listed address until otherwise properly notified by the applicant.

Telephone inquires concerning this decision should be directed to the undersigned at 571-272-4231.

Michelle R. Eason
Paralegal Specialist
Office of Petitions

cc: **ADLI LAW GROUP P.C.**
633 WEST FIFTH STREET
SUITE 2600
LOS ANGELES, CA 90071

UNITED STATES PATENT AND TRADEMARK OFFICE

Commissioner for Patents
United States Patent and Trademark Office
P.O. Box 1450
Alexandria, VA 22313-1450
www.uspto.gov

Paper No.

Adli Law Group P.C.
633 West Fifth Street
Suite 5880
Los Angeles CA 90071

MAILED
APR 25 2011
OFFICE OF PETITIONS

In re Application of	:	
Sun et al.	:	
Application No. 11/986,148	:	
Filed: November 19, 2007	:	DECISION ON PETITION
Attorney Docket No. 1011.101	:	UNDER 37 C.F.R. § 1.137(B)
Title: EPILATION DEVICE	:	

This is a decision on the petition filed January 10, 2011, pursuant to 37 C.F.R. § 1.137(b), to revive the above-identified application.

The petition pursuant to 37 C.F.R. § 1.137(b) is **GRANTED.**

The above-identified application became abandoned for failure to reply within the meaning of 37 C.F.R § 1.113 in a timely manner to the final Office action mailed April 20, 2010, which set a shortened statutory period for reply of three months. An after-final amendment was received on July 20, 2010, and an advisory action was mailed on July 26, 2010. A three-month extension of time was received on October 6, 2010 along with another after-final amendment, which brought the period for response out to the maximum extendable period of October 20, 2010.[1] A Request for Continued Examination (RCE) was submitted on October 29, 2010, subsequent to the expiration of the maximum extendable period for response. The fee associated with the filing of an RCE was submitted on December 23, 2010. A notice of improper request for continued examination was mailed on January 3, 2011. No additional extensions of time under the provisions of 37 C.F.R

1 Office records show that the $1,110 associated with the filing of the three-month extension of time was refunded to Deposit Account No. 03-1366 on January 3, 2011.

§ 1.136(a) were available, and no further responses were received. Accordingly, the above-identified application became abandoned on October 21, 2010.

A grantable petition pursuant to 37 C.F.R. § 1.137(b) must be accompanied by:

(1) The reply required to the outstanding Office action or notice, unless previously filed;
(2) The petition fee as set forth in 37 C.F.R. § 1.17(m);
(3) A statement that the entire delay in filing the required reply from the due date for the reply until the filing of a grantable petition pursuant to this paragraph was unintentional. The Commissioner may require additional information where there is a question whether the delay was unintentional, and;
(4) Any terminal disclaimer (and fee as set forth in 37 C.F.R. § 1.20(d)) required pursuant to paragraph (d) of this section.

With this petition, Petitioner filed another Request for Continued Examination (RCE) along with the proper statement of unintentional delay. As noted above, the fee associated with the filing of an RCE was submitted on December 23, 2010. The amendment filed on October 6, 2010 has been accepted as the required reply under 37 C.F.R. § 1.137(b)(1).

As such, the first three requirements of Rule 1.137(b) have been met. The fourth requirement of Rule 1.137(b) is not applicable, as a terminal disclaimer is not required.[2]

The Technology Center will be notified of this decision. The Technology Center's support staff will notify the Examiner of this decision, so that the submission under 37 C.F.R. § 1.114 - the amendment submitted on October 6, 2010 - can be processed in due course.

Petitioner may find it beneficial to view Private PAIR within a fortnight of the present decision to ensure that the revival has been acknowledged by the Technology Center in response to this decision. It is noted that all inquiries with regard to any failure of that change in status should be directed to the

2 See Rule 1.137(d).

Technology Center where that change of status must be effected - **the Office of Petitions cannot effectuate a change of status.**

Telephone inquiries regarding *this decision* should be directed to the undersigned at (571) 272-3225.[3] All other inquiries concerning examination procedures or status of the application should be directed to the Technology Center.

/Paul Shanoski/
Paul Shanoski
Senior Attorney
Office of Petitions

---

3 Petitioner will note that all practice before the Office should be in writing, and the action of the Office will be based exclusively on the written record in the Office. See 37 C.F.R. § 1.2. As such, Petitioner is reminded that no telephone discussion may be controlling or considered authority for Petitioner's further action(s).

UNITED STATES PATENT AND TRADEMARK OFFICE

Commissioner for Patents
United States Patent and Trademark Office
P.O. Box 1450
Alexandria, VA 22313-1450
www.uspto.gov

Decision Date : June 13,2011

In re Application of :

Lori Gurnsey

Application No : 11986173

Filed: 20-Nov-2007

Attorney Docket No : 18504-58818-A

DECISION ON REQUEST TO WITHDRAW AS ATTORNEY/AGENT OF RECORD

This is an electronic decision on the Request to Withdraw as attorney or agent of record under 37 CFR.§ 1.36(b), filed June 13,2011

The request is **APPROVED**

The request was signed by J. Charles Dougherty (registration no. 41715) on behalf of all the attorneys/agents of record. All attorneys/agents of record have been withdrawn.

Since there are no remaining attorneys of record, all future communications from the Office will be directed the first named inventor or assignee that has properly made itself of record pursuant to 37 CFR 3.71 with correspondence address:

Name	Lori A. Gurnsey
Name2	
Address 1	P.O. Box 600827
Address 2	
City	Jacksonville
State	FL
Postal Code	32260
Country	US

As a reminder, requester is required to inform the first named inventor or assignee that has properly made itself of record pursuant to 37 CFR 3.71 of the electronically processed petition.

Telephone inquiries concerning this decision should be directed to the Patent Electronic Business Center (EBC) at 866-217-9197.

Office of Petitions

Doc Code: PET.AUTO **Document Description: Petition automatically granted by EFS-Web**	PTO/SB/83 U.S. Patent and Trademark Office Department of Commerce

Electronic Petition Request	**REQUEST FOR WITHDRAWAL AS ATTORNEY OR AGENT AND CHANGE OF CORRESPONDENCE ADDRESS**
Application Number	11986173
Filing Date	20-Nov-2007
First Named Inventor	Lori Gurnsey
Art Unit	3717
Examiner Name	ANH-VO NGUYEN
Attorney Docket Number	18504-58818-A
Title	Electronic elimination game system and method

◉ Please withdraw me as attorney or agent for the above identified patent application and all the practitioners of record.

The reason(s) for this request are those described in 37 CFR:

10.40(c)(1)(iv)

Certifications

☒ I/We have given reasonable notice to the client, prior to the expiration of the response period, that the practitioner(s) intend to withdraw from employment

☒ I/We have delivered to the client or a duly authorized representative of the client all papers and property (including funds) to which the client is entitled

☒ I/We have notified the client of any responses that may be due and the time frame within which the client must respond

Change the correspondence address and direct all future correspondence to the first named inventor or assignee that has properly made itself of record pursuant to 37 CFR 3.71:

Name	Lori A. Gurnsey
Address	P.O. Box 600827
City	Jacksonville
State	FL
Postal Code	32260
Country	US

I am authorized to sign on behalf of myself and all withdrawing practitioners.	
Signature	/chuck dougherty/
Name	J. Charles Dougherty
Registration Number	41715

UNITED STATES PATENT AND TRADEMARK OFFICE

UNITED STATES DEPARTMENT OF COMMERCE
United States Patent and Trademark Office
Address: COMMISSIONER FOR PATENTS
P.O. Box 1450
Alexandria, Virginia 22313-1450
www.uspto.gov

APPLICATION NO.	FILING DATE	FIRST NAMED INVENTOR	ATTORNEY DOCKET NO.	CONFIRMATION NO.
11/986,237	11/19/2007	James Turkson	USF.T194XCD1	1886

7590 10/26/2010
SALIWANCHIK LLOYD & SALIWANCHIK
A PROFESSIONAL ASSOCIATION
PO Box 142950
GAINESVILLE, FL 32614

EXAMINER
HEARD, THOMAS SWEENEY

ART UNIT	PAPER NUMBER
1654	

NOTIFICATION DATE	DELIVERY MODE
10/26/2010	ELECTRONIC

ACKNOWLEDGEMENT OF REQUEST

Notice of Allowance/Allowability Mailed

The request to print a color drawing reference as the first paragraph in the portion of the specification containing a brief description of the drawings as required by 37 CFR 1.84 and MPEP § 608.02 has been received by the United States Patent and Trademark Office and will be entered into the specification.

571-272-4200 or 1-888-786-0101
Application Assistance Unit
Office of Data Management

FORM PTOM327-5 (Rev. 02/08)

UNITED STATES PATENT AND TRADEMARK OFFICE

Commissioner for Patents
United States Patent and Trademark Office
P.O. Box 1450
Alexandria, VA 22313-1450
www.uspto.gov

October 22, 2010

SALIWANCHIK LLOYD & SALIWANCHIK
A PROFESSIONAL ASSOCIATION
PO Box 142950
GAINESVILLE FL 32614

In re Application of	:	
James Turkson, et al	:	**DECISION ON PETITION**
Application No. 11986237	:	
Filed: 11/19/2007	:	***ACCEPTANCE OF COLOR***
Attorney Docket No. **USF.T194XCD1**	:	***DRAWINGS***

This is a decision on the Petition to Accept Color Drawings under 37 C.F.R 1.84 (a) (2), received in the United States Patent and Trademark Office (USPTO) November 19, 2007.

The petition is **GRANTED.**

A grantable petition under 37 C.F.R. 1.84(a) (2) must be accompanied by the following.

1. The fee set forth under 37 C.F.R. 1.17(h),
2. Three (3) sets of the color drawings in question, or (1) set if filed via EFS, and
3. The specification containing the following language as the first paragraph in that portion of the specification relating to the brief description of the drawings.

   "The file of this patent contains at least one drawing executed in color. Copies of this patent with color drawing(s) will be provided by the Patent and Trademark Office upon request and payment of the necessary fee."

The petition was accompanied by all of the required fees and drawings. The specification contains the appropriate language. Therefore, the petition is GRANTED.

Telephone inquires relating to this decision may be directed to the undersigned in the Office of Data Management at 571-272-4200.

/Kimberly Terrell/
Manager
Office of Data Management
Publications Branch

UNITED STATES PATENT AND TRADEMARK OFFICE

Commissioner for Patents
United States Patent and Trademark Office
P.O. Box 1450
Alexandria, VA 22313-1450
www.uspto.gov

PAUL W. MARTIN
NCR CORPORATION, LAW DEPT.
3097 SATELLITE BLVD., 2ND FLOOR
DULUTH GA 30096

MAILED

NOV 03 2011

OFFICE OF PETITIONS

In re Application of	:	
Hendsbee et al.	:	
Application No. 11/986,254	:	DECISION ON PETITION
Filed: November 20, 2007	:	
Attorney Docket No. 13371.00	:	

This is a decision on the petition under the unintentional provisions of 37 CFR 1.137(b), filed October 18, 2011, to revive the above-identified application.

The petition is **GRANTED**.

The application became abandoned for failure to reply in a timely manner to the non-final Office action mailed, December 29, 2010, which set a shortened statutory period for reply of three (3) months. No extensions of time under the provisions of 37 CFR 1.136(a) were obtained. Accordingly, the application became abandoned on March 30, 2011. A Notice of Abandonment was mailed July 19, 2011.

The petition satisfies the requirements of 37 CFR 1.137(b) in that petitioner has supplied (1) the reply in the form of an Amendment, (2) the petition fee of $1,860.00, and (3) a proper statement of unintentional delay.

Telephone inquiries concerning this decision should be directed to the undersigned at (571) 272-7751.

This application is being referred to Technology Center AU 2432 for appropriate action by the Examiner in the normal course of business on the reply received.

/Joan Olszewski/
Joan Olszewski
Petitions Examiner
Office of Petitions

SPE RESPONSE FOR CERTIFICATE OF CORRECTION

Paper No.: ____

DATE : 2/10/2011

TO SPE OF : ART UNIT 2886

SUBJECT : Request for Certificate of Correction for Appl. No.: 11/986403 Patent No.: 7842944 B2

CofC mailroom date: 2/5/2011

Please respond to this request for a certificate of correction within 7 days.

FOR IFW FILES:

Please review the requested changes/corrections as shown in the **COCIN** document(s) in the IFW application image. No new matter should be introduced, nor should the scope or meaning of the claims be changed.

Please complete the response (see below) and forward the completed response to scanning using document code **COCX**.

FOR PAPER FILES:

Please review the requested changes/corrections as shown in the attached certificate of correction. Please complete this form (see below) and forward it with the file to:

Certificates of Correction Branch (CofC)
Randolph Square – 9D10-A
Palm Location 7580

Virginia Tolbert
Certificates of Correction Branch
571-272-0460

Thank You For Your Assistance

The request for issuing the above-identified correction(s) is hereby:
Note your decision on the appropriate box.

- [x] **Approved** — All changes apply.
- [ ] **Approved in Part** — Specify below which changes **do not** apply.
- [ ] **Denied** — State the reasons for denial below.

Comments: ____

SPE

2886
Art Unit

UNITED STATES PATENT AND TRADEMARK OFFICE

Commissioner for Patents
United States Patent and Trademark Office
P.O. Box 1450
Alexandria, VA 22313-1450
www.uspto.gov

Kirschstein, Israel, Schiffmiller & Pieroni, P.C.
425 FIFTH AVENUE
5TH FLOOR
NEW YORK NY 10016-2223

MAILED

JUL 07 2011

PCT LEGAL ADMINISTRATION

In re Application of	:	
ITO et al.	:	
Application No.: 11/986,443	:	
Filing Date: 21 November 2007	:	DECISION on PETITION
Attorney's Docket No.: KU-3/Minori	:	
For: METHOD FOR GENERATING OZONE	:	UNDER 37 CFR 1.78(a)(3)
USING HEMIMORPHIC CRYSTAL AND	:	
APPARATUS FOR THE SAME	:	

This is a decision on Petitioner's "Petition Under 37 CFR 1.78(a)(3) to Accept an Unintentionally Delayed Claim", filed 03 June 2011, to accept an unintentionally delayed claim under 35 U.S.C. §120 and 365(c) for the benefit of priority of PCT Application No. PCT/JP06/310469 filed on 25 May 2006.

The petition is **DISMISSED**.

A petition under 37 CFR §1.78(a)(3) is only applicable to those applications filed on or after November 29, 2000. Further, the petition is appropriate only after the expiration of the period specified in 37 CFR 1.78(a)(2)(ii). In addition, the petition under 37 CFR 1.78(a)(3) must be accompanied by:

(1) the reference required by 35 U.S.C. §§120 and 37 CFR §§1.78(a)(2)(i)of the prior-filed application, unless previously submitted;
(2) the surcharge set forth in § 1.17(t); and
(3) a statement that the entire delay between the date the claim was due under 37 CFR 1.78(a)(2)(ii) and the date the claim was filed was unintentional. The Director may require additional information where there is a question whether the delay was unintentional.

The instant petition does not comply with item (1).

With respect to the reference required by 35 U.S.C. § 120 and 37 CFR 1.78(a)(2)(i) of the prior-filed application, applicant did not provide a proper reference in the form of an amendment to the first sentence(s) of the specification or supplemental Application Data Sheet. 37 CFR 1.78(a)(2)(i) requires that any nonprovisional application claiming the benefit of one or more

prior-filed copending international applications designating the U.S. must contain or be amended to contain a reference to each such prior-filed application, identifying it by international application number and international filing date, and indicating the relationship of the applications. The relationship between the applications is whether the subject application is a continuation, divisional, or continuation-in-part of a prior-filed international application. The reference added to the specification does not comply with 37 CFR 1.78(a)(2)(i) since the proper relationship, which includes the type of continuing application, is not stated. See Manual of Patent Examining Procedure, (8th ed., Revision 7 (July 2008)), Section 201.11, Reference to Prior Application(s). The present application is not a U.S. national stage application under 35 U.S.C. 371.

Accordingly, before the petition under 37 CFR § 1.78(a)(3) can be granted, a renewed petition under 37 CFR § 1.78(a)(3) and a substitute amendment (37 CFR 1.121) or supplemental application data sheet (37 CFR 1.76) is required.

Any questions concerning this matter may be directed to Cynthia Kratz at (571) 272-3286.

Any further correspondence with respect to this matter may be filed electronically via EFS-Web selecting the document description "Petition for review and processing by the PCT Legal Office" or by mail addressed to Mail Stop PCT, Commissioner for Patents, Office of PCT Legal Administration, P.O. Box 1450, Alexandria, Virginia 22313-1450, with the contents of the letter marked to the attention of the Office of PCT Legal Administration.

/Boris Milef/
Boris Milef
PCT Legal Examiner
Office of PCT Legal Administration

UNITED STATES PATENT AND TRADEMARK OFFICE

Commissioner for Patents
United States Patent and Trademark Office
P.O. Box 1450
Alexandria, VA 22313-1450
www.uspto.gov

Kirschstein, Israel, Schiffmiller & Pieroni, P.C.
425 FIFTH AVENUE
5TH FLOOR
NEW YORK NY 10016-2223

MAILED
JAN 06 2012
PCT LEGAL ADMINISTRATION

In re Application of	:	
ITO et al.	:	
Application No.: 11/986,443	:	
Filing Date: 21 November 2007	:	DECISION on PETITION
Attorney's Docket No.: KU-3/Minori	:	
For: METHOD FOR GENERATING OZONE	:	UNDER 37 CFR 1.78(a)(3)
USING HEMIMORPHIC CRYSTAL AND	:	
APPARATUS FOR THE SAME	:	

This is a decision on Petitioner's "Renewed Petition" under 37 CFR 1.78(a)(3) , filed 11 October 2011, to accept an unintentionally delayed claim under 35 U.S.C. §120 and 365(c) for the benefit of priority to the international application identified in the concurrently filed Application Data Sheet.

At the time of filing the present application, applicant did not make a proper claim for domestic priority. Thus, the filing of a petition under 37 CFR 1.78(a)(3) is necessary. Such petition is hereby **GRANTED**.

A petition for acceptance of a claim for late priority under 37 CFR 1.78(a)(3) is only applicable to those applications filed on or after November 29, 2000. Further, the petition is appropriate only after the expiration of the period specified in 37 CFR 1.78(a)(2)(ii). In addition, the petition under 37 CFR 1.78(a)(3) must be accompanied by:

(1) the reference required by 35 U.S.C. § 120 and 37 CFR 1.78(a)(2)(i) of the prior-filed application, unless previously submitted;
(2) the surcharge set forth in § 1.17(t); and
(3) a statement that the entire delay between the date the claim was due under 37 CFR 1.78(a)(2)(ii) and the date the claim was filed was unintentional. The Director may require additional information where there is a question whether the delay was unintentional.

The petition complies with the requirements for a grantable petition under 37 CFR 1.78(a)(3) in that (1) a reference to the prior-filed international application has been included in the Application Data Sheet, as provided by 37 CFR 1.78(a)(2)(iii); (2) the surcharge fee required by 37 CFR 1.17(t) has been submitted; and (3) the petition contains a statement of unintentional

delay that the entire delay between the date the claim was due under 37 CFR 1.78(a)(2)(ii) and the date the claim was filed was unintentional. Accordingly, having found that the petition for acceptance of an unintentionally delayed claim for the benefit of priority under 35 U.S.C. §§ 120 to the prior-filed international application satisfies the conditions of 37 CFR 1.78(a)(3), the petition is granted.

The granting of the petition to accept the delayed benefit claim to the prior-filed application under 37 CFR 1.78(a)(3) should not be construed as meaning that this instant application is entitled to the benefit of the prior-filed application. In order for this application to be entitled to the benefit of the prior-filed application, all other requirements under 35 U.S.C. §120 and 37 CFR 1.78(a)(1) and (a)(2) must be met. Similarly, the fact that the corrected Filing Receipt accompanying this decision on petition includes the prior-filed application should not be construed as meaning that applicant is entitled to the claim for benefit of priority to the prior-filed application noted thereon. Accordingly, the examiner will, in due course, consider this benefit claim and determine whether this application is entitled to the benefit of the earlier filing date.

A corrected Filing Receipt, which includes the priority claim to the prior-filed international application, accompanies this decision on petition.

Any inquiries concerning this decision may be directed to Cynthia M. Kratz at (571) 272-3286. All other inquiries concerning either the examination procedures or status of the application should be directed to the Technology Center.

/Boris Milef/

Boris Milef
PCT Legal Examiner
Office of PCT Legal Administration

ATTACHMENT: Corrected Filing Receipt

UNITED STATES PATENT AND TRADEMARK OFFICE

Commissioner for Patents
United States Patent and Trademark Office
P.O. Box 1450
Alexandria, VA 22313-1450
www.uspto.gov

WOLF GREENFIELD & SACKS, P.C.
600 ATLANTIC AVENUE
BOSTON MA 02210-2206

MAILED

SEP 06 2011

OFFICE OF PETITIONS

In re Application
Victor E. Shashoua
Application No. 11/986,456
Filed: November 21, 2007
Attorney Docket No. I0371.70001 US04

: DECISION ON APPLICATION
: FOR PATENT TERM ADJUSTMENT

This is in response to the APPLICATION FOR PATENT TERM ADJUSTMENT UNDER 37 CFR 1.705(b)filed August 26, 2011. Applicant requests that the determination of patent term adjustment be corrected from 323 to 609 days. Applicant requests this correction in part on the basis that the Office will take in excess of three years to issue this patent and in light of the recent court decision in Wyeth v. Dudas, No. 07-1492 (D.D.C. September 30, 2008).[1]

As the instant application for patent term adjustment requests reconsideration of the patent term adjustment as it relates to the Office's failure to issue the patent within three years of the filing date, the application for patent term adjustment under 37 CFR 1.705(b) is **DISMISSED as PREMATURE**.

Knowledge of the actual date the patent issues is required to calculate the amount, if any, of additional patent term patentees are entitled to for Office failure to issue the patent within three years. See 37 CFR 1.702(b). (This is true even where a request for continued examination (RCE) was filed). The computer will not undertake the § 1.702(b) calculation until the actual date of issuance of the patent has been determined. Likewise, the computer will not calculate any further Office delay under 37 CFR 1.702(a)(4) or applicant delay under 37 CFR 1.704(c)(10) until the actual date of issuance of the patent has been determined. As such, the Office cannot make a determination on the patent term adjustment relating to those provisions until the patent has issued.

[1]Reconsidered in light of the Court of Appeals for the Federal Circuit's decision in *Wyeth v. Kappos*, 2009-1120 (Fed. Cir. 1-7-2010).

Requesting reconsideration of the patent term adjustment to be indicated on the patent under 37 CFR 1.705(b) based on the initial determination of patent term adjustment and a projected issuance date of the patent (or even the filing date of the request for continued examination) is premature. Accordingly, it is appropriate to dismiss such a request as premature.

Rather than file an application for patent term adjustment under 37 CFR 1.705(b) contesting the 37 CFR 1.702(b) calculation at the time of the mailing of the notice of allowance, applicants are advised that they may wait until the time of the issuance of the patent and file a request for reconsideration of the patent term adjustment pursuant to 37 CFR 1.705(d). As the USPTO does not calculate the amount of time earned pursuant to 37 CFR 1.702(b) until the time of the issuance of the patent, the Office will consider any request for reconsideration of the patent term adjustment due to an error in the calculation of 37 CFR 1.702(b) to be timely if the request for reconsideration is filed within two months of the issuance of the patent. However, as to all other bases for contesting the initial determination of patent term adjustment received with the notice of allowance, applicants must timely file an application for patent term adjustment prior to the payment of the issue fee.[2]

To the extent that applicant otherwise requests correction of the patent term adjustment at the time of the mailing of the Notice of Allowance, the application for patent term adjustment is **GRANTED**.

The Office has updated the PALM screen to reflect that the correct Patent Term Adjustment (PTA) determination at the time of the mailing of the Notice of Allowance is two hundred thirty (230) days including ninety-three days for applicant delay. A copy of the updated PALM screen, showing the correct determination, is enclosed.

The instant application for patent term adjustment was timely filed[3] on or before payment of the issue fee.

On May 26, 2011, the Office mailed the Determination of Patent Term Adjustment under 35 U.S.C. 154(b)in the above-identified application. The Notice stated that the patent term adjustment to date is 323 days. Applicants state that "the USPTO issued a Notice to File Corrected Application Papers on February 27, 2008. Applicant filed a response to the Notice on August 29, 2008. Thus, Applicant submits that the filing of the reply on August 29, 2008 should have resulted in a reduction of PTA by 93 days.

---

[2] For example, if applicants dispute both the calculation of patent term adjustment under 37 CFR 1.702(a)(1) for Office failure to mail a first Office action or notice of allowance not later than fourteen months after the date on which the application was filed, and under 37 CFR 1.702(b) for Office failure to issue a patent within three years of the actual filing date of the application, then applicants must still timely file an application for patent term adjustment prior to the payment of the issue fee to contest the calculation of Office delay in issuing a first Office action or notice of allowance. See 37 CFR 1.705(b) and 35 U.S.C. 154(b)(3)(B). A dispute as to the calculation of the § 1.702(a)(1) period raised on request for reconsideration of patent term adjustment under 37 CFR 1.705(d) will be dismissed as untimely filed.

[3] PALM records indicate that the issue fee was paid on August 26, 2011.

The instant application for patent term adjustment was timely filed[3] on or before payment of the issue fee.

On May 26, 2011, the Office mailed the Determination of Patent Term Adjustment under 35 U.S.C. 154(b)in the above-identified application. The Notice stated that the patent term adjustment to date is 323 days. Applicants state that "the USPTO issued a Notice to File Corrected Application Papers on February 27, 2008. Applicant filed a response to the Notice on August 29, 2008. Thus, Applicant submits that the filing of the reply on August 29, 2008 should have resulted in a reduction of PTA by 93 days. Pursuant to 37 CFR 1.704(b), a period of reduction of 93 days should have been entered. 37 CFR 1.704(b) provides that:

> With respect to the grounds for adjustment set forth in §§ 1.702(a) through (e), and in particular the ground of adjustment set forth in § 1.702(b), an applicant shall be deemed to have failed to engage in reasonable efforts to conclude processing or examination of an application for the cumulative total of any periods of time in excess of three months that are taken to reply to any notice or action by the Office making any rejection, objection, argument, or other request, measuring such three-month period from the date the notice or action was mailed or given to the applicant, in which case the period of adjustment set forth in § 1.703 shall be reduced by the number of days, if any, beginning on the day after the date that is three months after the date of mailing or transmission of the Office communication notifying the applicant of the rejection, objection, argument, or other request and ending on the date the reply was filed. The period, or shortened statutory period, for reply that is set in the Office action or notice has no effect on the three-month period set forth in this paragraph.

In this instance, applicants did fail to engage in reasonable efforts to conclude processing of the application by failing to reply to the Notice to File Corrected Application Papers mailed February 27, 2008 within the three-month period provided for in 37 CFR 1.704(b). Applicants did not file a complete and proper response until August 29, 2008. Accordingly, a period of reduction of 93 days is being entered for the period beginning on May 28, 2008, the day after the date that is three months after the date of mailing of the Notice, and ending on August 29, 2008, the date applicants' reply was filed.

---

[3] PALM records indicate that the issue fee was paid on August 26, 2011.

In view thereof, the determination of Patent Term Adjustment at the time of the mailing of the notice of allowance is TWO HUNDRED THIRTY (230) days (323 days of Office delay reduced by 93 days of applicant delay).

The Office acknowledges submission of the $200.00 fee set forth in 37 CFR 1.18(e) for consideration of the application for patent term adjustment under 37 CFR 1.705(b). No additional fees are required.

Applicants are reminded that any delays by the Office pursuant to 37 CFR 1.702(a)(4) and 1.702(b) and any applicant delays under 37 CFR 1.704(c)(10) will be calculated at the time of the issuance of the patent and applicants will be notified of the revised patent term adjustment to be indicated on the patent in the Issue Notification letter that is mailed to applicants approximately three weeks prior to issuance.
The Office of Data Management has been advised of this decision. This matter is being referred to the Office of Data Management for issuance of the patent.

Telephone inquiries specific to this decision should be directed to the undersigned at (571) 272-3212.

/Patricia Faison-Ball/

Patricia Faison-Ball
Senior Petitions Attorney
Office of Petitions

Enclosure: Copy of Revised PALM Screen

Patent Term Adjustments

PTA/PTE Information | Patent Term Adjustment | Patent Term Extension

Application Number*: 11986456 Search | Explanation of PTA Calculation | Explanation of PTE Calculation

PTA Calculations for Application: 11986456

Application Filing Date	11/21/2007	OverLapping Days Between (A and B) or (A and C)	0
Issue Date of Patent		Non-Overlapping USPTO Delays:	323
A Delays	323	PTO Manual Adjustment	-93
B Delays	0	Applicant Delay (APPL)	0
C Delays	0	Total PTA (days)	230

* - Sorted Column

File Contents History

Action Number	Action Recorded Date	Action Due Date	Action Code	Action Description	Duration PTO	Duration APPL	Parent Action Number
87	09/01/2011		P028	Adjustment of PTA Calculation by PTO		93	0
66	05/26/2011		MN/=.	Mail Notice of Allowance			0
65	05/25/2011		OAR	Office Action Review			0
64	05/25/2011		N/=.	Notice of Allowance Data Verification Completed			0
63	05/25/2011		IREV	Issue Revision Completed			0
62	05/25/2011		DVER	Document Verification			0
61	05/16/2011		CNTA	Allowability Notice			0
59	05/09/2011		PA..	Change in Power of Attorney (May Include Associate POA)			0
56	05/03/2011		FWDX	Date Forwarded to Examiner			0
60	05/02/2011		IDSC	Information Disclosure Statement considered			0
58	05/02/2011		RCAP	Reference capture on IDS			0
57	05/02/2011	05/02/2011	M844	Information Disclosure Statement (IDS) Filed			55
55	05/02/2011		A.NE	Amendment after Final Rejection			0
54	05/02/2011		WIDS	Information Disclosure Statement (IDS) Filed			0
53	02/02/2011		MCTFR	Mail Final Rejection (PTOL - 326)			0
52	01/31/2011		CTFR	Final Rejection			0
50	01/12/2011		FWDX	Date Forwarded to Examiner			0
49	01/10/2011		A.NE	Amendment after Final Rejection			0
51	12/22/2010		IDSC	Information Disclosure Statement considered			0
48	12/22/2010		EIDS.	Electronic Information Disclosure Statement			0
47	12/22/2010		WIDS	Information Disclosure Statement (IDS) Filed			0
46	10/13/2010		MCTFR	Mail Final Rejection (PTOL - 326)			0
45	10/12/2010		CTFR	Final Rejection			0
44	08/03/2010		FWDX	Date Forwarded to Examiner			0
43	07/28/2010		A...	Response after Non-Final Action			0
42	04/28/2010		MCTNF	Mail Non-Final Rejection			0
41	04/26/2010		CTNF	Non-Final Rejection			0
39	03/10/2010		FWDX	Date Forwarded to Examiner			0
38	02/11/2010		ELC.	Response to Election / Restriction Filed			0
37	02/11/2010		XT/G	Request for Extension of Time - Granted			0
36	12/10/2009	01/21/2009	MCTRS	Mail Restriction Requirement	323		0.5
35	12/07/2009		CTRS	Restriction/Election Requirement			0
30	07/24/2009		DOCK	Case Docketed to Examiner in GAU			0
29	07/08/2009		TSSCOMP	IFW TSS Processing by Tech Center Complete			0
23	03/26/2009		PG-ISSUE	PG-Pub Issue Notification			0
22	12/17/2008		OIPE	Application Dispatched from OIPE			0
21	12/17/2008		FLRCPT.U	Filing Receipt - Updated			0
18	12/05/2008		CRFF	Error(s) in CRF Corrected by STIC			0
20	11/11/2008		ADDFLFEE	Additional Application Filing Fees			0
19	11/11/2008		CRFL	CRF Disk Has Been Received by Preexam / Group / PCT			0
16	10/20/2008		SQPR	SEQUENCE ERRORS			0
40	10/14/2008		IDSC	Information Disclosure Statement considered			0
28	10/14/2008		RCAP	Reference capture on IDS			0
27	10/14/2008		M844	Information Disclosure Statement (IDS) Filed			0
17	10/14/2008		WIDS	Information Disclosure Statement (IDS) Filed			0
8	10/03/2008		CRFD	CRF Is Flawed Technically / Not Entered into Database			0
26	08/29/2008		C614	New or Additional Drawing Filed			0
25	08/29/2008		A.PE	Preliminary Amendment			0
15	08/29/2008		ADDFLFEE	Additional Application Filing Fees			0
14	08/29/2008		CRFL	CRF Disk Has Been Received by Preexam / Group / PCT			0
10	08/29/2008		SEQLIST	A set of symbols and procedures, provided to the PTO on a set of computer listings, that describe in			0
9	08/29/2008		CORRDRW	Applicant has submitted new drawings to correct Corrected			0

			Papers problems	
7	02/27/2008	CPAP	Corrected Paper	0
6	02/27/2008	FLRCPT.O	Filing Receipt	0
5	01/31/2008	L128	Cleared by L&R (LARS)	0
4	12/06/2007	L198	Referred to Level 2 (LARS) by OIPE CSR	0
3	12/06/2007	CLSS	CASE CLASSIFIED BY OIPE	0
2	11/27/2007	SCAN	IFW Scan & PACR Auto Security Review	0
1	11/23/2007	IEXX	Initial Exam Team nn	0
24	11/21/2007	A.PE	Preliminary Amendment	0
12	11/21/2007	CLAIM	Claim Preliminary Amendment	0
0.5	11/21/2007	EFILE	Filing date	0

Export to: Excel

Best Available Copy

SPE RESPONSE FOR CERTIFICATE OF CORRECTION

DATE : 12-01-11

TO SPE OF : ART UNIT 1656

SUBJECT : Request for Certificate of Correction for Appl. No.: 11/986456 Patent No.: 8034774

CofC mailroom date: 11-18-11

Please respond to this request for a certificate of correction within 7 days.

FOR IFW FILES:

Please review the requested changes/corrections as shown in the **COCIN** document(s) in the IFW application image. No new matter should be introduced, nor should the scope or meaning of the claims be changed.

Please complete the response (see below) and forward the completed response to scanning using document code **COCX**.

FOR PAPER FILES:

Please review the requested changes/corrections as shown in the attached certificate of correction. Please complete this form (see below) and forward it with the file to:

Certificates of Correction Branch (CofC)
Randolph Square – 9D10-A
Palm Location 7580

Note: _____

Angela Green 571.272.9005
CofC Branch 703-756-1814

Thank You For Your Assistance

The request for issuing the above-identified correction(s) is hereby:
Note your decision on the appropriate box.

- [x] **Approved** — All changes apply.
- [ ] **Approved in Part** — Specify below which changes **do not** apply.
- [ ] **Denied** — State the reasons for denial below.

Comments: _____

SPE _____ Art Unit 1656

UNITED STATES PATENT AND TRADEMARK OFFICE

Commissioner for Patents
United States Patent and Trademark Office
P.O. Box 1450
Alexandria, VA 22313-1450
www.uspto.gov

VENABLE LLP
P.O. BOX 34385
WASHINGTON DC 20043-9998

MAILED

SEP 07 2010

OFFICE OF PETITIONS

In re Application of	:	
Pilniak et al.	:	
Application No. 11/986,486	:	DECISION ON PETITION
Filed: November 20, 2007	:	
Attorney Docket No. 117455-284667	:	

This is a decision on the renewed petition, filed August 13, 2010, which is being treated as a petition under 37 CFR 1.181 (no fee) requesting withdrawal of the holding of abandonment in the above-identified application.

The petition is **GRANTED**.

This application was held abandoned for failure to reply to the Notice of Non-Compliant Amendment (37 CFR 1.121) mailed April 5, 2010, which set a one (1) month statutory period for reply.

Petitioner asserts that the Office action dated April 5, 2010 was not received.

A review of the written record indicates no irregularity in the mailing of the Office action, and, in the absence of any irregularity, there is a strong presumption that the Office action was properly mailed to the practitioner at the address of record. This presumption may be overcome by a showing that the Office action was not in fact received. In this regard, the showing required to establish the failure to receive the Office action must consist of the following:

(1) A statement from the practitioner describing the system used for recording an Office action received at the correspondence address of record with the USPTO. The statement should establish that the docketing system is sufficiently reliable.

(2) A statement from the practitioner that the Office action was not received at the correspondence address of record, and that a search of the practitioner's record(s), including any file jacket or the equivalent, and the application contents, indicates that the Office action was not received.

(3) A copy of the record(s) used by the practitioner where the non-received Office action would have been entered had it been received is required. A copy of the practitioner's record(s) required to show non-receipt of the Office action should include the master docket for the firm.

See MPEP § 711.03(c) under subheading "Petition to Withdraw Holding of Abandonment Based on Failure to Receive Office Action," and "Withdrawing the Holding of Abandonment When Office Actions Are Not Received," 1156 Official Gazette 53 (November 16, 1993).

The petition satisfies the above-stated requirements. Accordingly, the application was not abandoned in fact.

In view of the above, the Notice of Abandonment is hereby vacated and the holding of abandonment withdrawn.

This application is being referred to the Technology Center technical support staff of Art Unit 2832 for re-mailing the Office action of April 5, 2010. The period for reply will run from the mailing date of the Office action.

Liana Walsh
Petitions Examiner
Office of Petitions

UNITED STATES PATENT AND TRADEMARK OFFICE

Commissioner for Patents
United States Patent and Trademark Office
P.O. Box 1450
Alexandria, VA 22313-1450
www.uspto.gov

MAILED
AUG 15 2011
OFFICE OF PETITIONS

PATENTS+TMS, P.C.
2849 W. ARMITAGE AVE.
CHICAGO IL 60647

In re Application of :
Charles G. PASSMORE, et *al.* :
Application No. 11/986,490 : DECISION ON PETITION TO
Filed: November 21, 2007 : WITHDRAW FROM RECORD
Attorney Docket No. **DHC-P-07-001** :

This is a decision on the Request to Withdraw as attorney or agent of record under 37 C.F.R. § 1.36(b), filed August 1, 2011.

The request is **NOT APPROVED**.

The request to withdraw as attorney/agent of record and change of correspondence address is hereby not accepted. Petitioner has not complied with current USPTO requirements, set forth in 37 CFR 10.40 concerning Request for Withdrawal as Attorney and Change of Correspondence Address.

Petitioner has not properly submitted forwarding correspondence address information for the application.

The Office will only accept correspondence address changes to the most current address information provided for the assignee of the entire interest *who properly became of record under 37 CFR 3.71*, or if no assignee of the entire interest has properly been made of record, the most current address information provided for the first named inventor. 37 CFR 3.71 (c) states:

> ***An assignee becomes of record either in a national patent application or a reexamination proceeding by filing a statement in compliance with § 3.73 (b) that is signed by a party who is authorized to act on behalf of the assignee.***

In order to request or take action in a patent matter, the assignee must establish its ownership of the patent to the satisfaction of the Director. In this regard, a Statement under 37 CFR 3.73(b) must have either: (i) documentary evidence of a chain of title from the original owner to the assignee (e.g., copy of an executed assignment), and a

statement affirming that the documentary evidence of the chain of title from the original owner to the assignee was or concurrently is being submitted for recordation pursuant to § 3.11; or (ii) a statement specifying where documentary evidence of a chain of title from the original owner to the assignee is recorded in the assignment records of the Office (e.g., reel and frame number).

Inquires concerning either the examination or status of the application should be directed to the Technology Center at (571) 272-2400. Telephone inquiries concerning this decision should be directed to the undersigned at (571) 272-7253.

/Monica A. Graves/
Petitions Examiner, Office of Petitions

UNITED STATES PATENT AND TRADEMARK OFFICE

Commissioner for Patents
United States Patent and Trademark Office
P.O. Box 1450
Alexandria, VA 22313-1450
www.uspto.gov

MAILED
SEP 19 2011
OFFICE OF PETITIONS

PATENT + TMS, P.C.
2849 W. ARMITAGE AVE.
CHICAGO IL 60647

In re Application of	:	
PASSMORE, et al	:	
Application No. 11/986,490	:	DECISION ON PETITION
Filed: November 21, 2007	:	TO WITHDRAW
Attorney Docket No. DHC-P-07-001	:	FROM RECORD
	:	

This is a decision on the Request to Withdraw as attorney or agent of record under 37 C.F.R. § 1.36(b), filed August 31, 2011.

The request is **DISMISSED**.

The request to withdraw from record cannot be approved because the request to change the correspondence address is not acceptable. The Office will either change the correspondence address of record to the most current address information provided for the assignee of the entire interest who properly became of record under 37 CFR 3.71 or, if no assignee of the entire interest has properly been made of record under 37 CFR 3.71, the most current address information provided for the first named inventor. 37 CFR 3.71 states:

> *An assignee becomes of record either in a national patent application or a reexamination proceeding by filing a statement incompliance with § 3.73(b) that is signed by a party who is authorized to act on behalf of the assignee.*

According to a review of USPTO records, there is currently there is currently no Statement under 37 CFR 3.73 of record in the instant application. In this regard, the Office cannot change the correspondence address to the address indicated on the Request to Withdraw filed August 31, 2011.

All future communications from the Office will continue to be directed to the above-identified address until otherwise properly notified.

Telephone inquiries concerning this decision should be directed to the undersigned at (571) 272-6735.

/Diane C. Goodwyn/
Diane C. Goodwyn
Petitions Examiner
Office of Petitions

UNITED STATES PATENT AND TRADEMARK OFFICE

Commissioner for Patents
United States Patent and Trademark Office
P.O. Box 1450
Alexandria, VA 22313-1450
www.uspto.gov

MAILED
OCT 07 2011
OFFICE OF PETITIONS

PATENT + TMS, P.C.
2849 W. ARMITAGE AVE.
CHICAGO IL 60647

In re Application of	:	
PASSMORE, et al	:	
Application No. 11/986,490	:	DECISION ON PETITION
Filed: November 21, 2007	:	TO WITHDRAW
Attorney Docket No. DHC-P-07-001	:	FROM RECORD
	:	

This is a decision on the Request to Withdraw as attorney or agent of record under 37 C.F.R. § 1.36(b), filed September 28, 2011.

The request is **APPROVED**.

A grantable request to withdraw as attorney/agent of record must be signed by every attorney/agent seeking to withdraw or contain a clear indication that one attorney is signing on behalf of another/others. The Office requires the practitioner(s) requesting withdrawal to certify that he, she, or they have: (1) given reasonable notice to the client, prior to the expiration of the response period, that the practitioner(s) intends to withdraw from employment; (2) delivered to the client or a duly authorized representative of the client all papers and property (including funds) to which the client is entitled; and (3) notified the client of any responses that may be due and the time frame within which the client must respond, pursuant 37 CFR 10.40(c).

The request was signed by Brian M. Mattson the sole attorney of record.

Attorney Brian M. Mattson has been withdrawn.

Applicant is reminded that there is no attorney of record at this time.

The correspondence address of record has been changed and the new correspondence address is the address copied below until otherwise properly notified.

Telephone inquiries concerning this decision should be directed to the undersigned at (571) 272-6735.

/Diane Goodwyn/
Diane Goodwyn
Petitions Examiner
Office of Petitions

CHARLES GREGORY PASSMORE
4901 MORENA BLVD., STE. 600
SAN DIEGO CA 92117

UNITED STATES PATENT AND TRADEMARK OFFICE

UNITED STATES DEPARTMENT OF COMMERCE
United States Patent and Trademark Office
Address: COMMISSIONER FOR PATENTS
P.O. Box 1450
Alexandria, Virginia 22313-1450
www.uspto.gov

APPLICATION NUMBER	FILING OR 371(C) DATE	FIRST NAMED APPLICANT	ATTY. DOCKET NO./TITLE
11/986,490	11/21/2007	Charles Gregory Passmore	DHC-P-07-001

CONFIRMATION NO. 2569

POWER OF ATTORNEY NOTICE

29013
PATENTS+TMS, P.C.
2849 W. ARMITAGE AVE.
CHICAGO, IL 60647

OC000000050253902

Date Mailed: 10/06/2011

NOTICE REGARDING CHANGE OF POWER OF ATTORNEY

This is in response to the Power of Attorney filed 09/28/2011.

- The withdrawal as attorney in this application has been accepted. Future correspondence will be mailed to the new address of record. 37 CFR 1.33.

/dcgoodwyn/

Office of Data Management, Application Assistance Unit (571) 272-4000, or (571) 272-4200, or 1-888-786-0101

UNITED STATES PATENT AND TRADEMARK OFFICE

Commissioner for Patents
United States Patent and Trademark Office
P.O. Box 1450
Alexandria, VA 22313-1450
www.uspto.gov

MAILED
FEB 28 2012
OFFICE OF PETITIONS

JENKINS, WILSON, TAYLOR & HUNT, P. A.
3100 Tower Blvd.
Suite 1200
DURHAM NC 27707

In re Application of	:	
Brendes et al.	:	
Application No. 11/986,500	:	DECISION ON PETITION
Filed: November 21, 2007	:	UNDER 37 CFR 1.78(a)(6)
Attorney Docket No. 1322/49/3 DIV	:	

This is a decision on the petition under 37 CFR § 1.78(a)(6), filed February 10, 2012, to accept an unintentionally delayed claim under 35 U.S.C. § 119(e) for benefit of priority to the prior-filed provisional application set forth in the amendment, filed April 7, 2008.

The petition is **DISMISSED AS MOOT.**

Applicants filed an amendment to the first sentence of the specification following the title to include a reference to the prior-filed provisional application on April 7, 2008. While a reference to the prior-filed provisional application was not included in an Application Data Sheet (ADS) or in the first sentence of the specification following the title as required by the rules, a reference, nevertheless, was made in the declaration filed with the application.

Where a claim for priority under 37 CFR § 1.78(a)(6) is not included in the first sentence of the specification or in an ADS but does appear either in the oath or declaration or a transmittal letter filed with the application and the Office notes the claim for priority, no petition will be required to accept a late claim for priority. This is because the application would have been scheduled for publication on the basis of the information concerning the claim submitted elsewhere in the application within the time period set forth in 37 CFR § 1.78(a)(5)(ii). On the other hand, if the USPTO does not note the claim for priority to the prior-filed application set forth in the oath or declaration or transmittal letter submitted with the application, a petition will be required to accept a late claim for priority under 37 CFR § 1.78(a)(6).[1] In the present case, the Office noted the claim for priority to the prior-filed provisional application in declaration filed with the application, as shown by its inclusion on the filing receipt mailed December 17, 2007.

[1] *Note* MPEP 201.11 (III)(D) and 66 Federal Register 67087 at 67089 (Dec. 28, 2001), effective December 28, 2001.

In view of the above, the $1,410.00 petition fee submitted is unnecessary and will be refunded to petitioner's credit card in due course.

Applicants are informed the amendment, filed April 7, 2008, is not acceptable as drafted since it improperly incorporates by reference the prior-filed application. An incorporation by reference statement added after an application's filing date is not effective because no new matter can be added to an application after its filing date (see 35 U.S.C. § 132(a)). The reference to the prior application cannot include an incorporation by reference statement of the prior application. See Dart Industries v. Banner, 636 F.2d 684, 207 USPQ 273 (C.A.D.C. 1980). Note MPEP §§ 201.06(c) and 608.04(b). Please file another amendment deletes the incorporate by reference with respect to the provisional application.

Any questions concerning this decision on petition may be directed to the undersigned at (571) 272-3230. All other inquiries concerning either the examination procedures or status of the application should be directed to the Technology Center.

This application is being referred to Technology Center AU 2442 for consideration by the examiner of applicant's entitlement to claim benefit of priority under 35 U.S.C. § 119(e) to the prior-filed application.

Shirene Willis Brantley

Shirene Willis Brantley
Senior Petitions Attorney
Office of Petitions

UNITED STATES PATENT AND TRADEMARK OFFICE

Commissioner for Patents
United States Patent and Trademark Office
P.O. Box 1450
Alexandria, VA 22313-1450
www.uspto.gov

JENKINS, WILSON, TAYLOR & HUNT, P. A.
3100 Tower Blvd.
Suite 1200
DURHAM NC 27707

MAILED
APR 0 9 2012
OFFICE OF PETITIONS

In re Application of	:	
Brendes et al.	:	
Application No. 11/986,500	:	DECISION ON PETITION
Filed: November 21, 2007	:	UNDER 37 CFR 1.78(a)(6)
Attorney Docket No. 1322/49/3 DIV	:	

This is decision is in response to the RESPONSE TO DECISION ON PETITION UNDER 37 C.F.R. § 1.78(a)(6), filed March 30, 2012, which argues the incorporation by reference statement with respect to provisional Application No. 06/208,523 is acceptable.

The petition is **GRANTED.**

Applicants filed an amendment to the first sentence of the specification following the title to include a reference to the prior-filed provisional application on April 7, 2008. While a reference to the prior-filed provisional application was not included in an Application Data Sheet (ADS) or in the first sentence of the specification following the title as required by the rules, a reference, nevertheless, was made in the declaration filed with the application.

Where a claim for priority under 37 CFR § 1.78(a)(6) is not included in the first sentence of the specification or in an ADS but does appear either in the oath or declaration or a transmittal letter filed with the application and the Office notes the claim for priority, no petition will be required to accept a late claim for priority. This is because the application would have been scheduled for publication on the basis of the information concerning the claim submitted elsewhere in the application within the time period set forth in 37 CFR § 1.78(a)(5)(ii). On the other hand, if the USPTO does not note the claim for priority to the prior-filed application set forth in the oath or declaration or transmittal letter submitted with the application, a petition will be required to accept a late claim for priority under 37 CFR § 1.78(a)(6).[1] In the present case, the Office noted the claim for priority to the prior-filed provisional application in declaration filed with the application, as shown by its inclusion on the filing receipt mailed December 17, 2007.

[1] *Note* MPEP 201.11 (III)(D) and 66 Federal Register 67087 at 67089 (Dec. 28, 2001), effective December 28, 2001.

As a result, on February 28, 2012, the Office dismissed as moot applicants' petition under 37 C.F.R. § 1.78(a)(6), filed February 10, 2012. The decision asserted the amendment, filed April 7, 2008, is not acceptable as drafted since it improperly incorporates by reference the prior-filed application. Applicants dispute this finding.

As applicants explain, Application No. 09/770,316 incorporated Application No. 60/208,523 in its entirety. Because the present application originally incorporated the disclosure of Application No. 09/770,316 by reference and because Application no. 09/770,316 originally incorporated Application No. 60/208,523 by reference, no new matter is added to the present application by amending the priority claim in the present application to include an incorporation by reference of the provisional application.

Accordingly, the April 7, 2008 amendment is acceptable as written and the petition is granted.

Any questions concerning this decision on petition may be directed to the undersigned at (571) 272-3230. All other inquiries concerning either the examination procedures or status of the application should be directed to the Technology Center.

This application is being referred to Technology Center AU 2442 for consideration by the examiner of applicants' entitlement to claim benefit of priority under 35 U.S.C. § 119(e) to the prior-filed application, as set forth in the April 7, 2008 amendment.

Shirene Willis Brantley

Shirene Willis Brantley
Senior Petitions Attorney
Office of Petitions

UNITED STATES PATENT AND TRADEMARK OFFICE

UNITED STATES DEPARTMENT OF COMMERCE
United States Patent and Trademark Office
Address: COMMISSIONER FOR PATENTS
P.O. Box 1450
Alexandria, Virginia 22313-1450
www.uspto.gov

APPLICATION NO.	FILING DATE	FIRST NAMED INVENTOR	ATTORNEY DOCKET NO.	CONFIRMATION NO.
11/986,501	11/21/2007	Elisabeth Mocaer	SERVIER 527	2512

25666 7590 12/06/2010
THE FIRM OF HUESCHEN AND SAGE
SEVENTH FLOOR, KALAMAZOO BUILDING
107 WEST MICHIGAN AVENUE
KALAMAZOO, MI 49007

EXAMINER
THOMAS, TIMOTHY P

ART UNIT	PAPER NUMBER
1628	

MAIL DATE	DELIVERY MODE
12/06/2010	PAPER

Please find below and/or attached an Office communication concerning this application or proceeding.

The time period for reply, if any, is set in the attached communication.

UNITED STATES PATENT AND TRADEMARK OFFICE

Commissioner for Patents
United States Patent and Trademark Office
P.O. Box 1450
Alexandria, VA 22313-1450
www.uspto.gov

DEC 0 6 2010

THE FIRM OF HUESCHEN AND SAGE
SEVENTH FLOOR, KALAMAZOO BUILDING
107 WEST MICHIGAN AVENUE
KALAMAZOO MI 49007

: PETITION DECISION

In re Application of:
Mocaer et al.
Serial No.: 11/986,501
Filed: November 21, 2007
Attorney Docket No.: **SERVIER 527**

This is in response to the petition under 37 CFR § 1.181, filed October 21, 2010, requesting that the finality of the Office action of July 29, 2010 be withdrawn for being premature.

It is noted that applicants filed this petition under 37 CFR § 1.181 on October 21, 2010 requesting relief from the finality of the Office action mailed July 29, 2010. This petition was not filed within two months from the mailing of the final Office action and is thus untimely. Nevertheless, a decision on this petition is rendered herein.

BACKGROUND

The examiner mailed a non-final Office action on February 23, 2010 setting a three month shortened statutory period for reply. In this Office action, claims 1-4 were pending and claims 1 and 2 were rejected. Claims 3 and 4 were withdrawn from consideration. Claims 1 and 2 were rejected under 35 U.S.C. 103(a) as being unpatentable over De Leersnyder, Pandi-Perumal et al. and Souvie et al.

On May 24, 2010, applicants filed arguments traversing the examiner's rejection instituted in the non-final Office action of February 23, 2010. Applicants also canceled claims 3 and 4.

On July 29, 2010, the examiner mailed a final Office action setting a three month statutory limit for reply. Claims 1 and 2 were again rejected under 35 U.S.C. 103(a) as being unpatentable over De Leersnyder, Pandi-Perumal et al. and Souvie et al.

In reply to the final Office action of July 29, 2010, applicants filed this petition under 37 CFR § 1.181 on October 21, 2010, requesting withdrawal of finality of the Office action of July 29, 2010.

DISCUSSION

The petition and the file history have been carefully considered.

Applicants argue that the "statement at page 7 of the Final Rejection directly contradicts the Office statement that the clinical study is not comparative with the closest prior art (i.e., the De Leersnyder disclosure of therapy with melatonin and acebutolol) and therefore not evidence of unexpected effects. The Office statement at page 7 of the instant Office demonstrates that the Office has disregarded the arguments based on the evidence of superior/unexpected effects despite the fact that the Office actually acknowledges that the clinical trial is comparative to the De Leersnyder disclosure. The Applicants respectfully submit that the Office refusal to consider the arguments based on the disclosed clinical data is prejudicial to the Applicants."

Applicants' argument has been accorded careful consideration but it is not persuasive. Regarding the unexpected results, the examiner did consider this, but stated that the unexpected results are not commensurate in scope with the claimed invention which is a "comprising" language claim, and therefore includes compounds other than acebutolol and any amount of agomelatine. Furthermore, applicants should note that their arguments to the merits of the instant rejection is not a petitionable matter but an appealable one. Note the following rule:

> § 1.181 Petition to the Director.
> (a) Petition may be taken to the Director:
> (1) From any action or requirement of any examiner in the ex parte prosecution of an application, or in ex parte or inter partes prosecution of a reexamination proceeding which is not subject to appeal to the Board of Patent Appeals and Interferences or to the court;

It is noted that applicants' argument in the instant petition is not directed to an action or requirement of the examiner but is directed solely to the merits of the rejection maintained by the examiner. Specifically, applicants do not agree with the examiner's rejection over claims 1-2. It is deemed that a *clear issue for appeal* between the examiner and applicants regarding the status of the claimed invention and reasons why the claims are currently rejected has been established. Applicants are reminded of the right to the Appeal process concerning substantive issues involving the rejection of claims; see 37 CFR 1.191.

Accordingly, applicants' argument is not persuasive that the final Office action issued July 29, 2010 was premature and the finality of the Office action will not be withdrawn.

DECISION

The petition is **DENIED**.

Should there be any questions about this decision please contact Marianne C. Seidel, by letter addressed to Director, TC 1600, at the address listed above, or by telephone at 571-272-0584 or by facsimile sent to the general Office facsimile number, 571-273-8300.

Remy Yucel
Director, Technology Center 1600

UNITED STATES PATENT AND TRADEMARK OFFICE

Commissioner for Patents
United States Patent and Trademark Office
P.O. Box 1450
Alexandria, VA 22313-1450
www.uspto.gov

MAILED

DEC 15 2011

OFFICE OF PETITIONS

FISH & RICHARDSON P.C. (SV)
PO BOX 1022
MINNEAPOLIS MN 55440-1022

In re Patent No. 8,030,340
Issued: October 4, 2011
Application No. 11/986,555
Filing or 371(c) Date: November 21, 2007
Dkt. No.: 06275-588001/102537-1 US

: DECISION ON APPLICATION FOR
: PATENT TERM ADJUSTMENT

This is a decision on the application for patent term adjustment under 37 CFR 1.705(d) filed on December 2, 2011 requesting a increase in patent term adjustment from 349 days to 474 days.

The petition for reconsideration of the patent term adjustment is **DISMISSED**.

The above-identified application matured into U.S. Patent No. 8,030,340 on October 4, 2011. The patent issued with a patent term adjustment of 349 days. The instant application for patent term adjustment was timely filed December 2, 2011.

Patentee disputes the period of reduction totaling one day for applicant delay with respect to the reply filed April 6, 2009 and argue that the correct period of applicant delay is zero days.

With respect to the period of applicant delay totaling one day, patentees' arguments have been carefully considered, but are hereby DISMISSED AS UNTIMELY.

Patentees are advised that any request for reconsideration under 37 CFR 1.705(d) that raises issues that were raised, or could have been raised, in an application for patent term adjustment under 37 CFR 1.705(b) shall be dismissed as untimely as to those issues. As applicant delay contested by patentees could have been raised under 37 CFR 1.705(b), patentees' request for reconsideration of said reduction is dismissed as untimely.

Patentees also dispute the zero days accorded pursuant to 37 CFR 1.703(b). Patentees assert that the period beginning on November 22, 2010 (the day after the date that is three years after the date on which the application was filed), and ending October 4, 2011 (the date the patent was issued), is 317 days in length. With respect to the request for continued examination filed on February 17, 2010, patentees assert that the Director erred in subtracting from "B Delay" a period of time that was not "consumed by continued examination of the application. Patentees argue that no continued examination took place during the 125 day period from June 2, 2011 (the mailing date of the Notice of Allowance), until October 4, 2011 (the date the patent was issued). Accordingly, patentees assert that the patent is entitled to 125 days of "B Delay."

Patentees' arguments have been considered, but not found persuasive.

35 USC 154(b)(1)(B) states in relevant part:

> Subject to the limitations under paragraph (2), if the issue of an original patent is delayed due to the failure of the United States Patent and Trademark Office to issue a patent within 3 years after the actual filing date of the application in the United States, not including — (i) any time consumed by continued examination of the application requested by the applicant under section 132(b).

37 CFR 1.702(b) states in relevant part:

> Subject to the provisions of 35 U.S.C. 154(b) and this subpart, the term of an original patent shall be adjusted if the issuance of the patent was delayed due to the failure of the Office to issue a patent within three years after the date on which the application was filed under 35 U.S.C. 111(a) or the national stage commenced under 35 U.S.C. 371(b) or (f) in an international application, but not including: (1) Any time consumed by continued examination of the application under 35 U.S.C. 132(b).

37 CFR 1.703(b) states in relevant part:

> The period of adjustment under § 1.702(b) is the number of days, if any, in the period beginning on the day after the date that is three years after the date on which the application was filed under 35 U.S.C. 111(a) or the national stage commenced under 35 U.S.C. 371(b) or (f) in an international application and ending on the date a patent was issued, but not including the sum of the following periods: (1) The number of days, if any, in the period beginning on the date on which a request for continued examination of the application under 35 U.S.C. 132(b) was filed and ending on the date the patent was issued.

Thus, counting the period of time excluded from the "B delay" for the filing of a request for continued examination under 35 U.S.C. 132(b), from the date on which the request for continued examination is filed to the date the patent is issued is proper. Patentee does not dispute that time consumed by continued examination of an application under 35 U.S.C. 132(b) is properly excluded and that the calculation of the excluded period begins on the date of filing of the request for continued examination. At issue is what further processing or examination beyond the date of filing of the request for continued examination is not any time consumed by continued examination of the application under 35 U.S.C. 132(b). The USPTO indicated in September of 2000 in the final rule to implement the patent term adjustment provisions of the AIPA that once a request for continued examination under 35 U.S.C. 132(b) and 37 CFR 1.114 is filed in an application, any further processing or examination of the application, including granting of a patent, is by virtue of the continued examination given to the application under 35 U.S.C. 132(b) and CFR 1.114. See Changes to Implement Patent Term Adjustment under Twenty-Year Patent Term, 65 Fed. Reg. 56366, 56376 (Sept. 18, 2000) (response to comment 8). Thus, the excluded period begins with the filing of the request for continued examination and ends with the issuance of the patent.

Patentee's argument that the period of time after the issuance of a notice of allowance on a request for continued examination is not "any time consumed by continued examination requested by the applicant under section 132(b)" within the meaning of 35 U.S.C. 154(b)(1)(B)(i) is not availing. This limitation is not supported by the statutory language. Garcia v. United States, 469 U.S. 70, 75 (1984) ("only the most extraordinary showing of contrary intentions from [legislative history] would justify a limitation on the 'plain meaning' of the statutory language"). BP Am. Prod. Co. v. Burton, 549 U.S. 84, 91 (2006) ("Unless otherwise defined, statutory terms are generally interpreted in accordance with their ordinary meaning"). The statute provides for a guarantee of no more than 3-year application pendency, by providing for an adjustment in the patent term:

First, "Subject to the limitations of paragraph (2)," means that the limitations of paragraph 2 apply to this paragraph's adjustment of patent term. That is, the day-to-day extension of patent term for pendency beyond the 3 year period is restricted as follows: 1) "B delay" cannot accrue for days of "A delay" that overlap, 2) the patent term cannot be extended beyond disclaimed term, and 3) the period of adjustment, including accrued "B delay," will be reduced for applicant delay.

Second, "if the issue of an original patent is delayed due to the failure of the United States Patent and Trademark Office to issue a patent within 3 years after the actual filing date of the application in the United States," meaning that the condition must first occur that the issuance of an original patent (35 U.S.C. 153), not merely the issuance of a notice of allowance, is delayed due to the Office's failure to issue a patent (sign and record a patent grant in the name of the United States), not merely mail a notice of allowance, within 3 years after the actual filing date of the application in the United States. This provision gives the Office a three-year period to issue a patent (sign and record a patent grant in the name of the United States) after the application filing date before an adjustment will accrue for "B delay."
Third, "not including- (i) any time consumed by continued examination of the application requested by the applicant under section 132(b); (ii) any time consumed by a proceeding under section 135(a), any time consumed by the imposition of an order under section 181, or any time consumed by appellate review by the Board of Patent Appeals and Interferences or by a Federal court; or (iii) any delay in the processing of the application by the United States Patent and Trademark Office requested by the applicant except as permitted by paragraph (3)(C), meaning that the three-year period does not include "any time consumed by" or "any delay in processing," as specified in clauses (i)-(iii). This language correlates to 35 U.S.C. 154(b)(1)(A) which likewise provides the basis for determining the period given the Office to take the specified actions before an adjustment will accrue for "A delay" (e.g., extended for 1 day after the day after the period specified in clauses (i)-(iv)).

Furthermore, these clauses are interpreted using their ordinary meanings. Nonetheless, the context of the legislation should be considered. As stated in Wyeth v. Dudas, No. 07-1492, 2008 U.S. Dist. LEXIS 76063 (D.D.C., September 30, 2008), because the clock for calculating the 20-year patent term begins to run on the filing date, and not on the day the patent is actually granted, some of the effective term of a patent is consumed by the time it takes to prosecute the application. To mitigate this effect, the statute, *inter alia*, grants adjustments of patent term

whenever the patent prosecution takes more than three years, regardless of the reason. The time consumed by prosecution of the application includes every day the application is pending before the Office from the actual filing date of the application in the United States until the date of issuance of the patent. The time it takes to prosecute the application ends not with the mailing of the notice of allowance, but with the issuance of the patent.

Thus, not including "any time consumed by" means not including any days used to prosecute the application as specified in clauses (i)-(ii)[1]. Clause (i) specifies "any time consumed by continued examination of the application requested by the applicant under section 132(b)." Clause (ii) specifies "any time consumed by a proceeding under section 135(a), any time consumed by the imposition of an order under section 181, or any time consumed by appellate review by the Board of Patent Appeals and Interferences or by a Federal court." "Time" in the context of this legislation throughout refers to days. "Consumed by" means used by or used in the course of. *Websters Collegiate Dictionary*, (11th ed.). The "any" signifies that the days consumed by are "any" of the days in the pendency of the application, and not just days that occur after the application has been pending for 3 years. As such, "any time consumed by" refers to any days used in the course of 1) continued examination of the application under section 132(b)(the filing of a request for continued examination), 2) interference proceedings, 3) secrecy orders, and 4) appellate review. Thus, that 3-year period given to the Office to issue a patent before an adjustment will accrue for "B delay" does not include any days used in the course of or any time consumed by clauses (i)-(ii), including any time consumed by the filing of a request for continued examination.

Fourth, "the term of the patent shall be extended 1 day for each day after the end of that 3-year period until the patent is issued" meaning that the consequence of this failure is that after "the end of that 3-year period" an additional 1 day of patent term will accrue for each day that the application is pending until the day the patent is issued.

The "time consumed by" or used in the course of the continued examination of the application requested by the applicant under section 132(b) does not end until issuance of the patent. 35 U.S.C. 132(b) was enacted under the same title, the "American Inventors Protection Act of 1999," as 35 U.S.C. 154(b). Section 4403 of the AIPA amended 35 U.S.C. § 132 to provide, at the request of the applicant, for continued examination of an application for a fee (request for continued examination or RCE practice), without requiring the applicant to file a continuing application under 37 CFR 1.53(b) or a continued prosecution application (CPA) under 37 CFR 1.53(d). Thus, clause (i) is different from clause (ii) in that clause (i) refers to an examination process whereas clause (ii) refers to time consumed by proceedings (interferences, secrecy orders and appeals) in an application.

---

[1] Clause (iii) provides for not including (iii) any delay in the processing of the application by the United States Patent and Trademark Office requested by the applicant except as permitted by paragraph (3)(C), the term of the patent shall be extended 1 day for each day after the end of that 3-year period until the patent is issued. It is noted that paragraph (3)(C) allows with an adequate showing by applicant for reinstatement of no more than 3 months of the patent term reduced for applicant delay in taking in excess of three months to respond.

By nature, the time used in the course of the examination process continues to issuance of the patent. The examination process involves examining the application to ascertain whether it appears that the applicant is entitled to a patent under the law. See 35 U.S.C. 131 ("[t]he Director shall cause an examination to be made of the application and the alleged new invention; and if on such examination it appears that the applicant is entitled to a patent under the law, the Director shall issue a patent therefor"). If on examination it appears that the applicant is entitled to a patent, the USPTO issues a notice of allowance. See 35 U.S.C. 151 ("[i]f it appears that applicant is entitled to a patent under the law, a written notice of allowance of the application shall be given or mailed to the applicant"). If on examination it appears that the applicant is not entitled to a patent, the USPTO issues a notice (an Office action) stating the applicable rejection, objection, or other requirement, with the reasons therefor. See 35 U.S.C. 132 ("[w]henever, on examination, any claim for a patent is rejected, or any objection or requirement made, the Director shall notify the applicant thereof, stating the reasons for such rejection, or objection or requirement, together with such information and references as may be useful in judging of the propriety of continuing the prosecution of his application"). Neither the issuance of a notice of allowance nor the insurance of an Office action terminates the examination process. If after the issuance of an Office action under 35 U.S.C. 132 it subsequently appears that the applicant is entitled to a patent (e.g., in response to an argument or amendment by the applicant), the USPTO will issue a notice of allowance. Conversely, if after the issuance of a notice of allowance under 35 U.S.C. 151 it subsequently appears that the applicant is not entitled to a patent (e.g., in response to information provided by the applicant or uncovered by the USPTO), the USPTO will withdraw the application from issuance and issue an Office action under 35 U.S.C. 132 stating the applicable rejection, objection, or other requirement, with the reasons therefor.

As held in Blacklight Power, the USPTO's responsibility to issue a patent containing only patentable claims does not end with the issuance of a notice of allowance under 35 U.S.C. 151. See, BlackLight Power, Inc. v. Rogan, 295 F.3d 1269, 1273 (Fed. Cir. 2002). Rather, if there is any substantial, reasonable ground within the knowledge or cognizance of the Director as to why an application should not issue, it is the USPTO's duty to refuse to issue the patent even if a notice of allowance has previously been issued for the application. See, In re Drawbaugh, 9 App. D.C. 219, 240 (D.C. Cir 1896).

Moreover, the applicant continues to be engaged in the examination process after the mailing of the notice of allowance. 37 CFR 1.56 makes clear that the applicant has a duty to disclose information material to patentability as long as the application is pending before the USPTO (i.e., until a patent is granted or the application is abandoned). See, 37 CFR 1.56(a) ("[t]he duty to disclose information exists with respect to each pending claim until the claim is cancelled or withdrawn from consideration, or the application becomes abandoned"). 37 CFR 1.97 and 1.98 provide for the consideration of information submitted by the applicant after a notice of allowance has been mailed. See 37 CFR 1.97(d). In addition, 37 CFR 1.312 provides for the amendment of an application after a notice of allowance has been mailed. In fact, the request for examination procedures[2] permit the filing of a request for continued examination under 37 CFR

[2] Thus, on occasion, even where a request for continued examination has already been filed and a notice of allowance issued pursuant to that request, applicant may file a further request for continued examination.

1.114 even after the issuance of a notice of allowance under 35 U.S.C. 151. See 37 CFR 1.114(a)(1).

As the examination process does not terminate with the mailing of the notice of allowance, the time consumed by continued examination requested by the applicant under section 132(b) does not terminate with the mailing of the notice of allowance. All the time the application is pending from the date of filing of the request for continued examination to the mailing of the notice of allowance through issuance of the patent is a consequence of the filing of the request for continued examination. Further action by the Office is pursuant to that request. Applicant has gotten further prosecution of the application without having to file a continuing application under 37 CFR 1.53(b).

All of the continued examination pursuant to the filing of the request by the applicant is properly excluded from the delay attributed to the Office. 35 U.S.C. 154(b)(1)(B)'s guarantee of a total application pendency of no more than three years provides for adjustment of the patent term for delay due to the Office's failure to issue the patent within three years, but does not include "any time consumed by continued examination requested by the applicant under 35 U.S.C. 132(b)." It is not necessary to mitigate the effect on the 20-year term to the extent that applicant has requested that the Office continue to examine the application via a request for continued examination, in lieu of, the filing of a continuing application under 37 CFR 1.53(b).

Accordingly, in the instant matter, the period of adjustment under § 1.702(b) is zero days, the period from February 17, 2010, the date that the RCE was filed, to October 4, 2011, the date that the patent issued, being excluded from the period of adjustment under 37 CFR 1.702(b).

In view thereof, no adjustment to the patent term will be made.

Nothing in this decision shall be construed as a waiver of the requirement of 35 U.S.C. 154(b)(4) that any civil action by an applicant dissatisfied with a determination made by the Director under 35 U.S.C. 154(b)(3) be filed in the United States District Court for the District of Columbia within 180 days after the grant of the patent.

The Office acknowledges submission of the $200.00 fee set forth in 37 CFR 1.18(e). No additional fees are required.

Telephone inquiries specific to this matter should be directed to the undersigned at (571) 272-3205.

/ALESIA M. BROWN/

Alesia M. Brown
Attorney Advisor
Office of Petitions

UNITED STATES PATENT AND TRADEMARK OFFICE

Commissioner for Patents
United States Patent and Trademark Office
P.O. Box 1450
Alexandria, VA 22313-1450
www.uspto.gov

MAILED
JAN 26 2012
OFFICE OF PETITIONS

MURABITO HAO & BARNES LLP
THIRD FLOOR
TWO NORTH MARKET STREET
SAN JOSE CA 95113

In re Application of
William P. Wingert.
Application No. 11/986,582
Filed: May 22, 2001
Attorney Docket Number: WING-P001

ON PETITION

This is a decision on the PETITION FOR REFUND PURSUANT TO 37 C.F.R. 1.26, filed January 9, 2012, which is being treated under 37 CFR 1.181.

The petition under 37 CFR 1.181 is **DISMISSED**.

Petitioner contends that "The Office Summary page of the Office Action dated July 8, 2011 indicates the Office Action is a non-final. In contrast, page 16 of the body of the Office Action states that the Office Action is final. As a result of this inconsistency, the Office Action was docketed and responded to as a non-final action." As the response did not place the application in condition for allowance, an advisory action was mailed December 28, 2011 to which, a response was filed January 9, 2012 with a three month extension of time and fee in the amount of $1270.00. The refund requested is $710.00 which is the difference between a two month extension of time and a three month extension of time.

Petitioner argues that the filing of the extension of time request was necessitated by the Examiner's error and therefore only a two month extension of time should have been required for the response filed December 8, 2011.

The argument and evidence supplied with the petition have been carefully considered, but are not persuasive.

It is the applicant's responsibility to take the necessary action in an application under a final Office action to provide a complete and proper reply prior to the end of the period for reply. In this instance, there is no evidence that the applicants filed a written response or query as to the perceived discrepancy in the Office Action, as is required

by 37 CFR 1.2. Furthermore, as a response was due within three months of the mailing of either a non-Final or a Final Office Action, the response was due in either case by October 8, 2011. As a proper response was not filed until January 9, 2012, a three month extension of time was required to prevent the application from becoming abandoned.

Petitioner's suggestion that the inconsistency in the wording of the Office Action caused or contributed to the additional fees paid is not well taken. Petitioner requested and received an extension of time for the filing of the response to the July 8, 2011 Office Action, and the fees paid were required for the extension of time to do so.

As well, there is a fee for the fling of the instant petition which cannot be refunded. Pursuant to the authorization to charge any additional fees or apply any credits, petitioner's deposit account no. 50-4160 has been charged in the amount of $400.

This matter is being referred back to Technology Center 2841 for processing of the RCE.

Telephone inquiries related to this matter should be directed to the undersigned Petitions Attorney at (571) 272-3212.

Patricia Faison-Ball

Patricia Faison-Ball
Senior Petitions Attorney
Office of Petitions

UNITED STATES PATENT AND TRADEMARK OFFICE

Commissioner for Patents
United States Patent and Trademark Office
P.O. Box 1450
Alexandria, VA 22313-1450
www.uspto.gov

EUGENIO J. TORRES
221 PLAZA BUILDING
PONCE DE LEON, SUITE 403
SAN JUAN PR 00917

MAILED
JAN 31 2011
OFFICE OF PETITIONS

In re Application of	:	
Ottoniel Reyes	:	
Application No. 11/986,662	:	DECISION ON PETITION
Filed: November 26, 2007	:	
Attorney Docket No. 0634.001 O. REYES	:	

This is a decision on the petition under the unintentional provisions of 37 CFR 1.137(b), filed January 3, 2011, to revive the above-identified application.

The petition is **GRANTED**.

This application became abandoned for failure to timely pay the issue and publication fees on or before December 29, 2010, as required by the Notice of Allowance and Fee(s) Due, mailed September 29, 2010. Accordingly, the date of abandonment of this application is December 30, 2010. A Notice of Abandonment was mailed on January 10, 2011.

The petition satisfies the requirements of 37 CFR 1.137(b) in that petitioner has supplied (1) the reply in the form of payment of the issue fee of $755 and the publication fee of $300, (2) the petition fee of $810, and (3) a proper statement of unintentional delay. Accordingly, the issue and publication fees are accepted as being unintentionally delayed.

Telephone inquiries concerning this decision should be directed to Kimberly Inabinet at (571) 272-4618.

This application is being referred to the Office of Data Management for further processing into a patent.

/Kimberly A. Inabinet/

Kimberly A. Inabinet
Petitions Examiner
Office of Petitions

UNITED STATES PATENT AND TRADEMARK OFFICE

Commissioner for Patents
United States Patent and Trademark Office
P.O. Box 1450
Alexandria, VA 22313-1450
www.uspto.gov

ROGER LEPLEY
2129 PORTAGE STREET
KALAMAZOO MI 49001

MAILED

AUG 06 2010

OFFICE OF PETITIONS

In re Application of :
Lepley, et al. :
Application No. 11/986,663 :
Filed: 26 November, 2007 :
Attorney Docket No: PR07-04 :

DECISION

This is a decision on the petition filed on 16 June, 2010, pursuant to 37 C.F.R. §1.137(b) for revival of an application abandoned due to unintentional delay.

The petition under 37 C.F.R. §1.137(b) is **GRANTED**.

As to the Allegations
of Unintentional Delay

The requirements of a grantable petition pursuant to 37 C.F.R. §1.137(b) are the petition and fee therefor, a reply, a proper statement of unintentional delay under the regulation, and, where applicable, a terminal disclaimer and fee.

Petitioners attentions always are directed to the guidance in the Commentary at MPEP §711.03(c).

BACKGROUND

The record reflects as follows:

The Applicant failed to reply timely and properly to the non-final Office action mailed on 1 December, 2009, with reply due absent extension of time on or before 1 March, 2010.

The application went abandoned by operation of law after midnight 1 March, 2010.

The Office mailed the Notice of Abandonment on 4 June, 2010.

On 16 June, 2010, Petitioner filed, *inter alia*, a petition pursuant to 37 C.F.R. §1.137(b), with fee, with a statement of unintentional delay and a reply in the form of an amendment

The availability of applications and application papers online to applicants/practitioners who diligently associate their Customer Number with the respective application(s) now provides an applicant/practitioner on-demand information as to events/transactions in an application.

Out of an abundance of caution, Petitioners always are reminded that those registered to practice and all others who make representations before the Office **must** inquire into the underlying facts of representations made to the Office and support averments with the appropriate documentation–since all owe to the Office the continuing duty to disclose.[1]

STATUTES, REGULATIONS AND ANALYSIS

Congress has authorized the Commissioner to "revive an application if the delay is shown to the satisfaction of the Commissioner to have been "unavoidable." 35 U.S.C. §133 (1994).[2]
The regulations at 37 C.F.R. §1.137(a) and (b) set forth the requirements for a Petitioner to revive a previously unavoidably or unintentionally, respectively, abandoned application under this congressional grant of authority.

Unintentional delays are those that do not satisfy the very strict statutory and regulatory requirements of unavoidable delay, and also, by definition, are not intentional.[3]))

As to Allegations of Unintentional Delay

The requirements of a grantable petition pursuant to 37 C.F.R. §1.137(b) are the petition and fee therefor, a reply, a proper statement of unintentional delay under the regulation, and, where applicable, a terminal disclaimer and fee.

It appears that the requirements under the rule have been satisfied.

---

[1] See supplement of 17 June, 1999. The Patent and Trademark Office is relying on petitioner's duty of candor and good faith and accepting a statement made by Petitioner. See Changes to Patent Practice and Procedure, 62 Fed. Reg. at 53160 and 53178, 1203 Off. Gaz. Pat. Office at 88 and 103 (responses to comments 64 and 109)(applicant obligated under 37 C.F.R. §10.18 to inquire into the underlying facts and circumstances when providing statements to the Patent and Trademark Office).

[2] 35 U.S.C. §133 provides:

35 U.S.C. §133 Time for prosecuting application.
Upon failure of the applicant to prosecute the application within six months after any action therein, of which notice has been given or mailed to the applicant, or within such shorter time, not less than thirty days, as fixed by the Commissioner in such action, the application shall be regarded as abandoned by the parties thereto, unless it be shown to the satisfaction of the Commissioner that such delay was unavoidable.

[3] Therefore, by example, an unintentional delay in the reply might occur if the reply and transmittal form are to be prepared for shipment by the US Postal Service, but other pressing matters distract one's attention and the mail is not timely deposited for shipment.

CONCLUSION

Accordingly, the petition pursuant to 37 C.F.R. §1.137(b) is **granted**.

The instant application is released to the Technology Center/AU 3611 for further processing in due course.

Petitioner may find it beneficial to view Private PAIR within a fortnight of the instant decision to ensure that the revival has been acknowledged by the TC/AU in response to this decision. It is noted that all inquiries with regard to that change in status need be directed to the TC/AU where that change of status must be effected—that does not occur in the Office of Petitions.

Telephone inquiries regarding this decision may be directed to the undersigned at (571) 272-3214—it is noted, however, that all practice before the Office is in writing (see: 37 C.F.R. §1.2[4]) and the proper authority for action on any matter in this regard are the statutes (35 U.S.C.), regulations (37 C.F.R.) and the commentary on policy (MPEP). Therefore, no telephone discussion may be controlling or considered authority for Petitioner's action(s).

/John J. Gillon, Jr./
John J. Gillon, Jr.
Senior Attorney
Office of Petitions

[4] The regulations at 37 C.F.R. §1.2 provide:
§1.2 Business to be transacted in writing.
All business with the Patent and Trademark Office should be transacted in writing. The personal attendance of applicants or their attorneys or agents at the Patent and Trademark Office is unnecessary. The action of the Patent and Trademark Office will be based exclusively on the written record in the Office. No attention will be paid to any alleged oral promise, stipulation, or understanding in relation to which there is disagreement or doubt.

UNITED STATES PATENT AND TRADEMARK OFFICE

Commissioner for Patents
United States Patent and Trademark Office
P.O. Box 1450
Alexandria, VA 22313-1450
www.uspto.gov

CATERPILLAR INC./LIELL & MCNEIL
INTELLECTUAL PROPERTY DEPARTMENT
AH9510
100 N.E. ADAMS
PEORIA IL 61629-9510

MAILED

JUN 16 2011

OFFICE OF PETITIONS

In re Application of	:	
Bailey et al.	:	
Application No. 11/986,716	:	DECISION ON PETITION
Filed: November 26, 2007	:	
Attorney Docket No. 07-406	:	

This is a decision on the petition under the unintentional provisions of 37 CFR 1.137(b), filed May 12, 2011, to revive the above-identified application.

The petition is **GRANTED**.

This application became abandoned for failure to timely pay the issue and publication fees on or before February 17, 2011, as required by the Notice of Allowance and Fee(s) Due mailed November 17, 2010. Accordingly, the date of abandonment of this application is February 18, 2011. A Notice of Abandonment was mailed March 4, 2011.

The petition satisfies the requirements of 37 CFR 1.137(b) in that petitioner has supplied (1) the reply in the form of payment of the issue fee of $1,510.00 and the publication fee of $300.00, (2) the petition fee of $1,620.00; and (3) a proper statement of unintentional delay.

Telephone inquiries concerning this decision should be directed to the undersigned at (571) 272-7751.

This application is being referred to the Office of Data Management for processing into a patent.

/Joan Olszewski/
Joan Olszewski
Petitions Examiner
Office of Petitions

UNITED STATES PATENT AND TRADEMARK OFFICE

Commissioner for Patents
United States Patent and Trademark Office
P.O. Box 1450
Alexandria, VA 22313-1450
www.uspto.gov

Paper No.

BASF AKTIENGESELLSCHAFT
CARL-BOSCH STRASSE 38, 67056 LUDWIGSHAFEN
LUDWIGSHAFEN 69056
GERMANY

MAILED

JAN 04 2011

OFFICE OF PETITIONS

In re Application of	:	
Li et al.	:	
Application No. 11/986,730	:	DECISION ON PETITION
Filed: November 26, 2007	:	PURSUANT TO
Attorney Docket No.: RLA/1-23571/A/CGC 2262	:	37 C.F.R. § 1.137(B)
Title: STABILIZED BIODIESEL FUEL COMPOSITIONS	:	

This is a decision on the petition pursuant to 37 C.F.R. § 1.137(b), filed December 8, 2010, to revive the above-identified application.

This petition pursuant to 37 C.F.R. § 1.137(b) is **GRANTED**.

The above-identified application became abandoned for failure to reply in a timely manner to the non-final Office action, mailed December 31, 2009, which set a shortened statutory period for reply of three months. No response was received, and no extensions of time under the provisions of 37 C.F.R. § 1.136(a) were requested. Accordingly, the above-identified application became abandoned on April 1, 2010. A notice of abandonment was mailed on September 22, 2010.

A grantable petition pursuant to 37 C.F.R. § 1.137(b) must be accompanied by:

(1) The reply required to the outstanding Office action or notice, unless previously filed;
(2) The petition fee as set forth in 37 C.F.R. § 1.17(m);
(3) A statement that the entire delay in filing the required reply from the due date for the reply until the filing of a grantable petition

pursuant to this paragraph was unintentional. The Commissioner may require additional information where there is a question whether the delay was unintentional, and;

(4) Any terminal disclaimer (and fee as set forth in 37 C.F.R. § 1.20(d)) required pursuant to paragraph (d) of this section.

With this petition, Petitioner has submitted an amendment, the petition fee, and the proper statement of unintentional delay.

As such, the first three requirements of Rule 1.137(b) have been met. The fourth requirement of Rule 1.137(b) is not applicable, as a terminal disclaimer is not required.[1]

The Technology Center will be notified of this decision, and jurisdiction over this application is transferred to the Technology Center, so that the application may receive further processing. The Technology Center's support staff will notify the Examiner of this decision, so that the amendment that was received on December 8, 2010 can be processed in due course.

Petitioner may find it beneficial to view Private PAIR within a fortnight of the present decision to ensure that the revival has been acknowledged by the Technology Center in response to this decision. It is noted that all inquiries with regard to any failure of that change in status should be directed to the Technology Center where that change of status must be effected - **the Office of Petitions cannot effectuate a change of status**.

Telephone inquiries regarding *this decision* should be directed to the undersigned at (571) 272-3225.[2] All other inquiries concerning this application should be directed to the Technology Center.

It is noted that the address listed on the petition differs from the address of record. The application file does not indicate a change of correspondence address has been filed in this case, although the address given on the petition differs from the address of record. If Petitioner desires to receive future

---

1 See Rule 1.137(d).

2 Petitioner will note that all practice before the Office should be in writing, and the action of the Office will be based exclusively on the written record in the Office. See 37 C.F.R. § 1.2. As such, Petitioner is reminded that no telephone discussion may be controlling or considered authority for Petitioner's further action(s).

correspondence regarding this application, the change of correspondence address must be submitted. A courtesy copy of this decision will be mailed to Petitioner. However, all future correspondence will be directed to the address of record until such time as appropriate instructions are received to the contrary. Petitioner will not receive future correspondence related to this application unless Change of Correspondence Address, Patent Form (PTO/SB/122) is submitted for the above-identified application. For Petitioner's convenience, a blank Change of Correspondence Address, Patent Form (PTO/SB/122), may be found at http://www.uspto.gov/web/forms/sb0122.pdf.

It is not apparent whether the person signing the statement of unintentional delay was in a position to have firsthand or direct knowledge of the facts and circumstances of the delay at issue. Nevertheless, such statement is being treated as having been made as the result of a reasonable inquiry into the facts and circumstances of such delay.[3] In the event that such an inquiry has not been made, Petitioner must make such an inquiry. If such inquiry results in the discovery that the delay was intentional, Petitioner must notify the Office.

/Paul Shanoski/
Paul Shanoski
Senior Attorney
Office of Petitions

cc: David M. LaPrairie
450 West Fourth Street
Royal Oak, MI 48067-2557

3 See 37 C.F.R. § 10.18(b); cf. Changes to Patent Practice and Procedure; Final Rule Notice, 62 Fed. Reg. 53131, 53178 (October 10, 1997), 1203 Off. Gaz. Pat. Office 63, 103 (October 21, 1997).

UNITED STATES PATENT AND TRADEMARK OFFICE

Commissioner for Patents
United States Patent and Trademark Office
P.O. Box 1450
Alexandria, VA 22313-1450
www.uspto.gov

MAILED
APR 11 2011
OFFICE OF PETITIONS

Margaret Anderson
106 E. 6th Street, Suite 900
Austin, TX 78701

In re Application of Edward S. Boyden, et. al. Application No. 11/986,785 Filed: November 26, 2007 Attorney Docket No. QQ1-0153US	DECISION ON PETITION TO WITHDRAW FROM RECORD

This is a decision on the Request to Withdraw as attorney or agent of record under 37 CFR §§ 1.36(b) or 10.40 filed January 27, 2011.

The request is **MOOT**.

A review of the file record indicates that any previous power of attorney was revoked on January 31, 2011. Accordingly, the request to withdraw under 37 CFR §§ 1.36(b) or 10.40 is unnecessary.

All future communications from the Office will be directed to the above-listed address of record until otherwise notified by applicant.

This application file is being referred to Technology Center 2600 for examination in due course.

Telephone inquires concerning this decision should be directed to the undersigned at (571) 272-3226.

Andrea Smith
Petitions Examiner
Office of Petitions

cc: Lee & Hayes, PLLC
601 W Riverside
Suite 1400
Spokane, WA 99201

UNITED STATES PATENT AND TRADEMARK OFFICE

Commissioner for Patents
United States Patent and Trademark Office
P.O. Box 1450
Alexandria, VA 22313-1450
www.uspto.gov

GlynnTech, Inc.
24 Mine Street
Flemington NJ 08822

MAILED
FEB 14 2011
OFFICE OF PETITIONS

In re Application of :
Michael E. Dugan :
Application No. 11/986,825 : DECISION ON PETITION
Filed: November 27, 2007 :
Attorney Docket No. MED-101A :

This is a decision on the petition under the unintentional provisions of 37 CFR 1.137(b), filed August 3, 2010, to revive the above-identified application.

The petition is **GRANTED**.

This application became abandoned for failure to timely pay the issue and publication fees on or before January 2, 2009, as required by the Notice of Allowance and Fee(s) Due, mailed October 1, 2008. Accordingly, the date of abandonment of this application is January 3, 2009. A Notice of Abandonment was mailed on January 28, 2009.

The petition satisfies the requirements of 37 CFR 1.137(b) in that petitioner has supplied (1) the reply in the form of payment of the issue fee of $755 and the publication fee of $300, (2) the petition fee of $810, and (3) a proper statement of unintentional delay. Accordingly, the issue and publication fees are accepted as being unintentionally delayed.

It is not apparent whether the person signing the statement of unintentional delay was in a position to have firsthand or direct knowledge of the facts and circumstances of the delay at issue. Nevertheless, such statement is being treated as having been made as the result of a reasonable inquiry into the facts and circumstances of such delay. See 37 CFR 10.18(b) and Changes to Patent Practice and Procedure; Final Rule Notice, 62 Fed. Reg. 53131, 53178 (October 10, 1997), 1203 Off. Gaz. Pat. Office 63, 103 (October 21, 1997). In the event that such an inquiry has not been made, petitioner must make such an inquiry. If such inquiry results in the discovery that it is not correct that the entire delay in filing the required reply from the due date for the reply until the filing of a grantable petition pursuant to 37 CFR 1.137(b) was unintentional, petitioner must notify the Office.

Telephone inquiries concerning this decision should be directed to Kimberly Inabinet at (571) 272-4618.

This application is being referred to the Office of Data Management for further processing into a patent.

/Kimberly A. Inabinet/

Kimberly A. Inabinet
Petitions Examiner
Office of Petitions

UNITED STATES PATENT AND TRADEMARK OFFICE

Commissioner for Patents
United States Patent and Trademark Office
P.O. Box 1450
Alexandria, VA 22313-1450
www.uspto.gov

JOSEPH A. FUCHS
ROCKEY, DEPKE & LYONS, LLC
233 S. WACKER DRIVE
SUITE 5450, SEARS TOWER
CHICAGO, IL 60606-6306

MAILED
APR 14 2011
OFFICE OF PETITIONS

In re Application of	:	
Matthew Foster et al.	:	
Application No. 11/986,889	:	DECISION ON PETITION
Filed: November 27, 2007	:	
Attorney Docket No. **115004.00009**	:	

This is a decision on the petition under the unintentional provisions of 37 CFR 1.137(b), filed February 28, 2011, and resubmitted on March 01, 2011, to revive the above-identified application.

The petition is **GRANTED**.

This application became abandoned for failure to timely pay the issue and publication fees on or before February 04, 2011, as required by the Notice of Allowance and Fee(s) Due, mailed November 04, 2010. Accordingly, the date of abandonment of this application is February 05, 2011.

The petition satisfies the requirements of 37 CFR 1.137(b) in that petitioner has supplied (1) the reply in the form of payment of the issue fee of $755 and the publication fee of $300, (2) the petition fee of $810; and (3) a proper statement of unintentional delay. Accordingly, the Issue Fee is accepted as having been unintentionally delayed.

Telephone inquiries concerning this decision should be directed to Tredelle Jackson at (571) 272-2783.

This application is being referred to the Office of Data Management for processing into a patent.

Ramesh Krishnamurthy
Petitions Examiner
Office of Petitions

UNITED STATES PATENT AND TRADEMARK OFFICE

Commissioner for Patents
United States Patent and Trademark Office
P.O. Box 1450
Alexandria, VA 22313-1450
www.uspto.gov

Paper No.

Thomas Langer, Esq.
COHEN, PONTANI, LIEBERMAN & PAVANE
551 Fifth Avenue, Suite 1210
New York NY 10176

MAILED
SEP 30 2010
OFFICE OF PETITIONS

In re Application of :
Albrecht et al. : ON PETITION
Application No. 11/986,909 :
Filed: November 27, 2007 :
Atty Docket No. 5367-141DIV2 :

This is in response to the PETITION TO WITHDRAW HOLDING OF ABANDONMENT filed March 16, 2010, requesting that the Office withdraw the holding of abandonment in the above-identified application.

The above-identified application became abandoned for failure to file a response to the non-final Office action mailed August 4, 2009. This Office action set a three-month shortened statutory period for reply, with extensions of time obtainable under 37 CFR §1.136(a). The application became abandoned effective November 5, 2009. A courtesy Notice of Abandonment was mailed on February 22, 2010.

Applicants filed the instant petition, asserting that the Office action was not received at the correspondence address of record.

A review of the application file reveals no irregularities in the mailing of the non-final Office action mailed August 4, 2009. Thus, there is a strong presumption that the correspondence was properly mailed to the applicant at the correspondence address of record. In the absence of demonstrated irregularities in mailing of this Notice, petitioner must submit evidence to overcome this presumption.

> The showing required to establish nonreceipt of an Office communication must include a statement from the practitioner describing the system used for recording an

> Office action received at the correspondence address of record with the USPTO. The statement should establish that the docketing system is sufficiently reliable. It is expected that the record would include, but not be limited to, the application number, attorney docket number, the mail date of the Office action and the due date for the response.
>
> Practitioner must state that the Office action was not received at the correspondence address of record, and that a search of the practitioner's record(s), including any file jacket or the equivalent, and the application contents, indicates that the Office action was not received. A copy of the record(s) used by the practitioner where the non-received Office action would have been entered had it been received is required. A copy of the practitioner's record(s) required to show non-receipt of the Office action should include the master docket for the firm. That is, if a three month period for reply was set in the nonreceived Office action, a copy of the master docket report showing all replies docketed for a date three months from the mail date of the nonreceived Office action must be submitted as documentary proof of nonreceipt of the Office action. If no such master docket exists, the practitioner should so state and provide other evidence such as, but not limited to, the following: the application file jacket; incoming mail log; calendar; reminder system; or the individual docket record for the application in question. See MPEP 711.03(c).

Petitioner has supported his claim of non-receipt with such evidence.

In view thereof, the holding of abandonment is hereby **WITHDRAWN**.

The petition under § 1.181 is **GRANTED**.

No fee is required on petition under § 1.181.

Technology Center AU 2894 has been advised of this decision. The application is, thereby, forwarded to the Technology Center's technical support staff to withdraw the holding of abandonment and for re-mailing of the Office action originally mailed August 4, 2009 and restarting of the period for reply.

Telephone inquiries related to this decision should be directed to the undersigned at (571) 272-3219.

Nancy Johnson
Senior Petitions Attorney
Office of Petitions

UNITED STATES PATENT AND TRADEMARK OFFICE

Commissioner for Patents
United States Patent and Trademark Office
P.O. Box 1450
Alexandria, VA 22313-1450
www.uspto.gov

ALLEN LEROY LIMBERG, ESQ.
1053 KENSINGTON STREET
PORT CHARLOTTE FL 33952

MAILED

MAY 23 2011

OFFICE OF PETITIONS

In re Application of	:	
Limberg, Allen Leroy	:	
Application No. 11/986,940	:	DECISION ON PETITION
Filed: November 27, 2007	:	TO MAKE SPECIAL UNDER
Attorney Docket No. **ALRL67A**	:	37 CFR 1.102(c)(1)
	:	

This is a decision on the petition under 37 CFR 1.102(c)(1), filed May 12, 2011, to make the above-identified application special based on applicant's age as set forth in M.P.E.P. § 708.02, Section IV.

The petition is **GRANTED**.

A grantable petition to make an application special under 37 CFR 1.102(c)(1) and MPEP § 708.02, Section IV: Applicant's Age must be accompanied by evidence showing that at least one of the applicants is 65 years of age, or more, such as a birth certificate or a statement by applicant. No fee is required

The instant petition includes a statement by Allen Limgerg attesting to his age. Accordingly, the above-identified application will be accorded "special" status.

Telephone inquiries concerning this decision should be directed to Tredelle Jackson at 571-272-2783.

All other inquiries concerning either the examination or status of the application should be directed to the Technology Center.

The application is being forwarded to the Technology Center Art Unit 2467 for action on the merits commensurate with this decision.

/Tredelle D. Jackson/
Paralegal Specialist
Office of Petitions

UNITED STATES PATENT AND TRADEMARK OFFICE

Commissioner for Patents
United States Patent and Trademark Office
P.O. Box 1450
Alexandria, VA 22313-1450
www.uspto.gov

ZILKA-KOTAB, PC
P.O. BOX 721120
SAN JOSE, CA 95172-1120

MAILED

APR 01 2011

OFFICE OF PETITIONS

In re Application of	:	
Faieta et al.	:	
Application No. 11/987,088	:	DECISION ON PETITION
Filed: November 27, 2007		TO WITHDRAW FROM RECORD
Attorney Docket No. NAI1P681/07.063.01	:	
	:	

This is a decision on the Request to Withdraw as attorney or agent of record under 37 C.F.R. § 1.36(b), filed February 25, 2011.

The request is **NOT APPROVED** because it is moot.

A review of the file record indicates that on March 3, 2011 the power of attorney to Zilka-Kotab, PC was revoked by the assignee of the patent application. Accordingly, the request to withdraw under 37 C.F.R. § 1.36(b) is moot.

All future communications from the Office will be directed to the below-listed address until otherwise notified by applicant.

Telephone inquires concerning this decision should be directed to the undersigned at 571-272- 7751. All other inquires concerning either the examination or status of the application should be directed to the Technology Center.

Joan Olszewski
Petitions Examiner
Office of Petitions

cc: Patent Capital Group
6119 McCommas Blvd
Dallas TX 75214

Doc Code: PET.AUTO Document Description: Petition automatically granted by EFS-Web	PTO/SB/140 U.S. Patent and Trademark Office Department of Commerce

Electronic Petition Request	**PETITION TO WITHDRAW AN APPLICATION FROM ISSUE AFTER PAYMENT OF THE ISSUE FEE UNDER 37 CFR 1.313(c)**
Application Number	11987089
Filing Date	27-Nov-2007
First Named Inventor	Masaaki Suzuki
Art Unit	2464
Examiner Name	DEWANDA SAMUEL
Attorney Docket Number	5251-037-US01
Title	METHOD AND APPARATUS FOR RADIO COMMUNICATION

An application may be withdrawn from issue for further action upon petition by the applicant. To request that the Office withdraw an application from issue, applicant must file a petition under this section including the fee set forth in § 1.17(h) and a showing of good and sufficient reasons why withdrawal of the application from issue is necessary.

APPLICANT HEREBY PETITIONS TO WITHDRAW THIS APPLICATION FROM ISSUE UNDER 37 CFR 1.313(c).

A grantable petition requires the following items:
(1) Petition fee; and
(2) One of the following reasons:
(a) Unpatentability of one or more claims, which must be accompanied by an unequivocal statement that one or more claims are unpatentable, an amendment to such claim or claims, and an explanation as to how the amendment causes such claim or claims to be patentable;
(b) Consideration of a request for continued examination in compliance with § 1.114 (for a utility or plant application only); or
(c) Express abandonment of the application. Such express abandonment may be in favor of a continuing application, but not a CPA under 37 CFR 1.53(d).

Petition Fee

- ☐ Applicant claims SMALL ENTITY status. See 37 CFR 1.27.
- ☐ Applicant is no longer claiming SMALL ENTITY status. See 37 CFR 1.27(g)(2).
- ☐ Applicant(s) status remains as SMALL ENTITY.
- ☒ Applicant(s) status remains as other than SMALL ENTITY

Reason for withdrawal from issue

○ One or more claims are unpatentable

◉ Consideration of a request for continued examination (RCE) (List of Required Documents and Fees)

○ Applicant hereby expressly abandons the instant application (any attorney/agent signing for this reason must have power of attorney pursuant to 37 CFR 1.32(b)).

RCE request,submission, and fee.

☐ I certify, in accordance with 37 CFR 1.4(d)(4) that : The RCE request ,submission, and fee have already been filed in the above-identified application on

☒ Are attached.

THIS PORTION MUST BE COMPLETED BY THE SIGNATORY OR SIGNATORIES

I certify, in accordance with 37 CFR 1.4(d)(4) that I am:

◉ An attorney or agent registered to practice before the Patent and Trademark Office who has been given power of attorney in this application.

○ An attorney or agent registered to practice before the Patent and Trademark Office, acting in a representative capacity.

○ A sole inventor

○ A joint inventor; I certify that I am authorized to sign this submission on behalf of all of the inventors

○ A joint inventor; all of whom are signing this e-petition

○ The assignee of record of the entire interest that has properly made itself of record pursuant to 37 CFR 3.71

Signature	/Michael A Schwartz/
Name	Michael A. Schwartz
Registration Number	40161

UNITED STATES PATENT AND TRADEMARK OFFICE

Commissioner for Patents
United States Patent and Trademark Office
P.O. Box 1450
Alexandria, VA 22313-1450
www.uspto.gov

Decision Date : June 24,2011

In re Application of :

Masaaki Suzuki

DECISION ON PETITION

UNDER CFR 1.313(c)(2)

Application No : 11987089

Filed : 27-Nov-2007

Attorney Docket No : 5251-037-US01

This is an electronic decision on the petition under 37 CFR 1.313(c)(2), filed June 24,2011 , to withdraw the above-identified application from issue after payment of the issue fee.

The petition is **GRANTED.**

The above-identified application is withdrawn from issue for consideration of a submission under 37 CFR 1.114 (request for continued examination). See 37 CFR 1.313(c)(2).

Petitioner is advised that the issue fee paid in this application cannot be refunded. If, however, this application is again allowed, petitioner may request that it be applied towards the issue fee required by the new Notice of Allowance.

Telephone inquiries concerning this decision should be directed to the Patent Electronic Business Center (EBC) at 866-217-9197.

This application file is being referred to Technology Center AU 2464 for processing of the request for continuing examination under 37 CFR 1.114 .

Office of Petitions

UNITED STATES PATENT AND TRADEMARK OFFICE

Commissioner for Patents
United States Patent and Trademark Office
P.O. Box 1450
Alexandria, VA 22313-1450
www.uspto.gov

STAAS & HALSEY LLP
SUITE 700
1201 NEW YORK AVENUE, N.W.
WASHINGTON DC 20005

MAILED

APR 06 2011

OFFICE OF PETITIONS

In re Application of :
Myung Soo Kim et al. :
Application No. 11/987,112 : DECISION ON PETITION
Filed: November 27, 2007 :
Attorney Docket No. 1594.1688 :

This is a decision on the petition under the unintentional provisions of 37 CFR 1.137(b), filed January 20, 2011, to revive the above-identified application.

The petition is **DISMISSED**.

Any request for reconsideration of this decision must be submitted within TWO (2) MONTHS from the mail date of this decision. Extensions of time under 37 CFR 1.136(a) are permitted. The reconsideration request should include a cover letter entitled "Renewed Petition under 37 CFR 1.137(b)." This is **not** a final agency action within the meaning of 5 U.S.C. § 704.

The application became abandoned for failure to reply in a timely manner to the non-final Office action mailed March 30, 2010, which set a shortened statutory period for reply of three (3) months. No extensions of time under the provisions of 37 CFR 1.136(a) were obtained. Accordingly, the application became abandoned on July 1, 2010. A Notice of Abandonment was mailed on December 6, 2010.

A grantable petition under 37 CFR 1.137(b) must be accompanied by: (1) the required reply, unless previously filed; (2) the petition fee as set forth in 37 CFR 1.17(m); (3) a statement that the entire delay in filing the required reply from the due date for the reply until the filing of a grantable petition pursuant to 37 CFR 1.137(b) was unintentional; and (4) any terminal disclaimer (and fee as set forth in 37 CFR 1.20(d)) required by 37 CFR 1.137(d). Where there is a question as to whether either the abandonment or the delay in filing a petition under 37 CFR 1.137 was unintentional, the Director may require additional information. See MPEP 711.03(c)(II)(C) and (D). The instant petition lacks item (3).

As to item (3) the statement of unintentional delay is presently not acceptable since the petition was not signed by all of the inventors. A renewed petition must include signatures of all inventors in this application.

The application file does not indicate a change of address has been filed in this case, although the address given on the petition differs from the address of record. A change of address should be filed in this case in accordance with MPEP 601.03. A courtesy copy of this decision is being mailed to the address noted on the petition. However, until otherwise instructed, all future correspondence regarding this application will be mailed solely to the address of record.

Further correspondence with respect to this matter should be addressed as follows:

By Mail: Mail Stop PETITION
Commissioner for Patents
P. O. Box 1450
Alexandria, VA 22313-1450

By hand: U. S. Patent and Trademark Office
Customer Service Window, Mail Stop Petitions
Randolph Building
401 Dulany Street
Alexandria, VA 22314

The centralized facsimile number is **(571) 273-8300.**

Telephone inquiries concerning this decision should be directed to Kimberly Inabinet at (571) 272-4618.

/Kimberly Inabinet/

Kimberly Inabinet
Petitions Examiner
Office of Petitions

cc: Kim Myoung Soo
Seoul City Dong Jag-Gu Daebang-Dong
Hyundae Apt 105-Dong 1001-Ho
Republic of Korea

UNITED STATES PATENT AND TRADEMARK OFFICE

Commissioner for Patents
United States Patent and Trademark Office
P.O. Box 1450
Alexandria, VA 22313-1450
www.uspto.gov

STAAS & HALSEY LLP
SUITE 700
1201 NEW YORK AVENUE, N.W.
WASHINGTON DC 20005

MAILED
JUN 20 2011
OFFICE OF PETITIONS

In re Application of :
Myung Soo Kim et al. :
Application No. 11/987,112 : DECISION ON PETITION
Filed: November 27, 2007 :
Attorney Docket No. 1594.1688 :

This is a decision on the renewed petition under the unintentional provisions of 37 CFR 1.137(b), filed June 6, 2011, to revive the above-identified application.

The petition is **GRANTED**.

The application became abandoned for failure to reply in a timely manner to the non-final Office action mailed March 30, 2010, which set a shortened statutory period for reply of three (3) months. No extensions of time under the provisions of 37 CFR 1.136(a) were obtained. Accordingly, the application became abandoned on July 1, 2010. A Notice of Abandonment was mailed on December 6, 2010.

The petition satisfies the requirements of 37 CFR 1.137(b) in that petitioner has supplied (1) the reply in the form of an amendment, (2) the petition fee of $1,620 and (3) a proper statement of unintentional delay. Accordingly, the amendment is accepted as being unintentionally delayed.

Telephone inquiries concerning this decision should be directed to Kimberly Inabinet at (571) 272-4618.

This application is being referred to Technology Center AU 3637 for appropriate action by the Examiner in the normal course of business on the reply received June 6, 2011.

/Kimberly Inabinet/

Kimberly Inabinet
Petitions Examiner
Office of Petitions

UNITED STATES PATENT AND TRADEMARK OFFICE

Commissioner for Patents
United States Patent and Trademark Office
P.O. Box 1450
Alexandria, VA 22313-1450
www.uspto.gov

YAO-TSUNG CHANG
C/O G-LINK CO. LTD.
3550 BELL ROAD
MINOOKA, IL 60447

MAILED

AUG 27 2010

OFFICE OF PETITIONS

In re Application of	:	
Chang	:	
Application No. 11/987,118	:	DECISION
Filed/Deposited: 27 November, 2007	:	
Attorney Docket No. BHT-3127-174	:	

This is a decision on the petition filed on 12 July, 2010, to revive an application under 37 C.F.R. §1.137(b) as having been abandoned due to unintentional delay.

NOTE:

The Revocation/Power of Attorney submitted has been accepted and entered.

However, it is noted that the telephone contact information supplied by Petitioner thus far is incorrect.

(A call placed by the Office on 25 August, 2010, to Petitioner at the telephone number listed on his Revocation/Power of Attorney was found to be an incorrect telephone number.)

Petitioner is respectfully requested to place his proper contact information (postal address and telephone number) on all papers submitted.

It is noted that while a correspondence address may be provided as indicated, the designation of a representative to prosecute the application—other than an Applicant him/herself—may only be to a registered practitioner.

The petition under 37 C.F.R. §1.137(b) is **GRANTED**.

As to the Allegations
of Unintentional Delay

The requirements of a grantable petition pursuant to 37 C.F.R. §1.137(b) are the petition and fee therefor, a reply, a proper statement and/or showing of unintentional delay under the regulation, and, where applicable, a terminal disclaimer and fee.

BACKGROUND

The record reflects as follows:

Petitioner failed to reply timely and properly to the Notice to File Missing Parts (fees due) mailed on 16 January, 2008, with reply due absent extension of time on or before 16 March, 2008.

The application went abandoned by operation of law after midnight 16 March, 2008.

The Office mailed a Notice of Abandonment on 22 September, 2009.

On 22 January, 2010, Petitioner/Applicant (Petitioner) filed, *inter alia*, a petition (with fee) pursuant to 37 C.F.R. §1.137(b), averring unintentional delay, with a reply in the form of (fees due), and made a statement of unintentional delay. However, while Petitioner submitted certain documents with the petition, Petitioners failed to provide a discussion of the extended period of delay following the date of abandonment as to the nature (facts/events, with supporting documentation) of the twenty-two- (22-) month delay since the date of abandonment and sixteen- (16-) month delay since the Notice thereof. The petition was dimissed on 1 July, 2010.

On 13 July, 2010, Petitioner filed, *inter alia*, a petition (with fee) pursuant to 37 C.F.R. §1.137(b), averring unintentional delay, with a discussion of the delay, and pointing to the prior-filed reply in the form of fees due, and made the statement of unintentional delay.

The record (including the petitions filed on 22 January, 2010, and 13 July, 2010) does not necessitate a finding that the delay between midnight 16 March, 2008 (the date of abandonment), and 13 July, 2010 (the date of the filing of grantable petition), was not unintentional.

Rather, the Patent and Trademark Office is relying in this matter on the duty of candor and good faith of Petitioner pro se Yao-Tsung Chang when accepting Petitioner's representation that the delay in filing the response was unintentional.[1]

---

[1] See Changes to Patent Practice and Procedure, 62 Fed. Reg. at 53160 and 53178, 1203 Off. Gaz. Pat. Office at 88 and 103 (responses to comments 64 and 109)(applicant obligated under 37 C.F.R. §10.18 to inquire into the underlying facts and circumstances when providing the statement required by 37 C.F.R. §1.137(b) to the Patent and Trademark Office).

The availability of applications and application papers online to applicants/practitioners who diligently associate their Customer Number with the respective application(s) now provides an applicant/practitioner on-demand information as to events/transactions in an application.

Out of an abundance of caution, Petitioners always are reminded that those registered to practice and all others who make representations before the Office **must** inquire into the underlying facts of representations made to the Office and support averments with the appropriate documentation–since all owe to the Office the continuing duty to disclose.[2]

STATUTES, REGULATIONS AND ANALYSIS

Congress has authorized the Commissioner to "revive an application if the delay is shown to the satisfaction of the Commissioner to have been "unavoidable." 35 U.S.C. §133 (1994).[3]
The regulations at 37 C.F.R. §1.137(a) and (b) set forth the requirements for a Petitioner to revive a previously unavoidably or unintentionally, respectively, abandoned application under this congressional grant of authority.

Unintentional delays are those that do not satisfy the very strict statutory and regulatory requirements of unavoidable delay, and also, by definition, are not intentional.[4]))

As to Allegations of Unintentional Delay

The requirements of a grantable petition pursuant to 37 C.F.R. §1.137(b) are the petition and fee therefor, a reply, a proper statement of unintentional delay under the regulation, and, where applicable, a terminal disclaimer and fee.

It appears that the requirements under the rule have been satisfied.

---

[2] See supplement of 17 June, 1999. The Patent and Trademark Office is relying on petitioner's duty of candor and good faith and accepting a statement made by Petitioner. See Changes to Patent Practice and Procedure, 62 Fed. Reg. at 53160 and 53178, 1203 Off. Gaz. Pat. Office at 88 and 103 (responses to comments 64 and 109)(applicant obligated under 37 C.F.R. §10.18 to inquire into the underlying facts and circumstances when providing statements to the Patent and Trademark Office).

[3] 35 U.S.C. §133 provides:

35 U.S.C. §133 Time for prosecuting application.
Upon failure of the applicant to prosecute the application within six months after any action therein, of which notice has been given or mailed to the applicant, or within such shorter time, not less than thirty days, as fixed by the Commissioner in such action, the application shall be regarded as abandoned by the parties thereto, unless it be shown to the satisfaction of the Commissioner that such delay was unavoidable.

[4] Therefore, by example, an unintentional delay in the reply might occur if the reply and transmittal form are to be prepared for shipment by the US Postal Service, but other pressing matters distract one's attention and the mail is not timely deposited for shipment.

CONCLUSION

Accordingly, the petition pursuant to 37 C.F.R. §1.137(b) is **granted**.

The instant application is released to the Office of Patent Application Processing (OPAP) for further processing in due course.

Petitioner may find it beneficial to view Private PAIR within a fortnight of the instant decision to ensure that the revival has been acknowledged by the OPAP in response to this decision. It is noted that all inquiries with regard to status need be directed to the OPAP where that change of status must be effected—that does not occur in the Office of Petitions.

Telephone inquiries regarding this decision may be directed to the undersigned at (571) 272-3214—it is noted, however, that all practice before the Office is in writing (see: 37 C.F.R. §1.2[5]) and the proper authority for action on any matter in this regard are the statutes (35 U.S.C.), regulations (37 C.F.R.) and the commentary on policy (MPEP). Therefore, no telephone discussion may be controlling or considered authority for Petitioner's action(s).

/John J. Gillon, Jr./
John J. Gillon, Jr.
Senior Attorney
Office of Petitions

[5] The regulations at 37 C.F.R. §1.2 provide:
§1.2 Business to be transacted in writing.
All business with the Patent and Trademark Office should be transacted in writing. The personal attendance of applicants or their attorneys or agents at the Patent and Trademark Office is unnecessary. The action of the Patent and Trademark Office will be based exclusively on the written record in the Office. No attention will be paid to any alleged oral promise, stipulation, or understanding in relation to which there is disagreement or doubt.

UNITED STATES PATENT AND TRADEMARK OFFICE

Commissioner for Patents
United States Patent and Trademark Office
P.O. Box 1450
Alexandria, VA 22313-1450
www.uspto.gov

G. LINK CO., LTD.
3550 BELL ROAD
MINOOKA IL 60447

MAILED

JUL 22 2011

OFFICE OF PETITIONS

In re Application of :
Jiang, et al. :
Application No. 11/987,119 : DECISION
Filed/Deposited: 27 November, 2007 :
Attorney Docket No. BHT-3127-175 :

This is a decision on the petition filed on 1 June, 2011, to revive an application under 37 C.F.R. §1.137(b) as having been abandoned due to unintentional delay.

NOTE:

Petitioners refer to a telephone conversation with someone at the Office.

Petitioners are or should be well aware that such a reference is improper.

All practice before the Office is in writing (see: 37 C.F.R. §1.2[1]) and the proper authority for action on any matter in this regard are the statutes (35 U.S.C.), regulations (37 C.F.R.) and the commentary on policy (MPEP). Therefore, no telephone or in-person discussion may be controlling or considered authority for Petitioner's action(s).

The record (including the petitions filed on 22 January, 2010, and 1 June, 2011) does not necessitate a finding that the delay between midnight 21 February, 2008 (the date of abandonment), and 1 June, 2011 (the date of the filing of grantable petition), was not unintentional.

Rather, the Patent and Trademark Office is relying in this matter on the duty of candor and good faith of Petitioners Shun-Quan Jiang and Tzu-Yi Huang when accepting Petitioners' representation that the delay in filing the response was unintentional.[2]

---

[1] The regulations at 37 C.F.R. §1.2 provide:
§1.2 Business to be transacted in writing.
All business with the Patent and Trademark Office should be transacted in writing. The personal attendance of applicants or their attorneys or agents at the Patent and Trademark Office is unnecessary. The action of the Patent and Trademark Office will be based exclusively on the written record in the Office. No attention will be paid to any alleged oral promise, stipulation, or understanding in relation to which there is disagreement or doubt.

[2] See Changes to Patent Practice and Procedure, 62 Fed. Reg. at 53160 and 53178, 1203 Off. Gaz. Pat. Office at 88 and 103 (responses to comments 64 and 109)(applicant obligated under 37 C.F.R. §10.18 to inquire into the underlying facts and circumstances when providing the statement required by 37 C.F.R. §1.137(b) to the Patent and Trademark Office).

The petition pursuant to 37 C.F.R. §1.137(b) is **GRANTED**.

As to the Allegations
of Unintentional Delay

The requirements of a grantable petition pursuant to 37 C.F.R. §1.137(b) are the petition and fee therefor, a reply, a proper statement and/or showing of unintentional delay under the regulation, and, where applicable, a terminal disclaimer and fee

Petitioners' attentions always are directed to the guidance in the Commentary at MPEP §711.03(c)(II).

BACKGROUND

The record reflects as follows:

Petitioner failed to reply timely and properly to the Notice to File Missing Parts (fees due) mailed on 21 December, 2007, with reply due absent extension of time on or before 21 February, 2008.

The application went abandoned by operation of law after midnight 21 February, 2008.

The Office mailed a Notice of Abandonment on 4 September, 2009.

On 22 January, 2010, Petitioners/Applicants (Petitioners) filed, *inter alia*, a petition (with fee) pursuant to 37 C.F.R. §1.137(b), averring unintentional delay, with a reply in the form of (fees due), and made a statement of unintentional delay. However, Petitioners failed to provide a discussion of the extended period of delay of nearly two- (2-) years since abandonment and the Office mailed the Notice of Abandonment in September, 2008, however, there is no discussion/showing as to the nature (facts/events, with supporting documentation) of the twenty-three- (23-) month delay since the date of abandonment and sixteen- (16-) month delay since the Notice thereof. The petition was dismissed on 1 July, 2010.

On 3 May, 2011, Petitioner filed, *inter alia*, a petition (with fee) pursuant to 37 C.F.R. §1.137(b), and pointed to the reply in the form of previously filed fees due, and made the statement of unintentional delay.

As noted above, the record (including the petitions filed on 22 January, 2010, and 1 June, 2011) does not necessitate a finding that the delay between midnight 21 February, 2008 (the date of abandonment), and 1 June, 2011 (the date of the filing of grantable petition), was not unintentional.

Rather, the Patent and Trademark Office is relying in this matter on the duty of candor and good faith of Petitioners Shun-Quan Jiang and Tzu-Yi Huang when accepting Petitioners' representation that the delay in filing the response was unintentional.[3]

Petitioners' attentions always are directed to the guidance in the Commentary at MPEP §711.03(c) as to the showing regarding unintentional delay and a petition pursuant to 37 C.F.R. §1.137(b).

The availability of applications and application papers online to applicants/practitioners who diligently associate their Customer Number with the respective application(s) now provides an applicant/practitioner on-demand information as to events/transactions in an application.

Out of an abundance of caution, Petitioners always are reminded that those registered to practice and all others who make representations before the Office **must** inquire into the underlying facts of representations made to the Office and support averments with the appropriate documentation–since all owe to the Office the continuing duty to disclose.[4]

STATUTES, REGULATIONS AND ANALYSIS

Congress has authorized the Commissioner to revive an application if the delay is shown to the satisfaction of the Commissioner to have been "unavoidable." 35 U.S.C. §133 (1994).[5]
The regulations at 37 C.F.R. §1.137(a) and (b) set forth the requirements for a Petitioner to revive a previously unavoidably or unintentionally, respectively, abandoned application under this congressional grant of authority.

Unintentional delays are those that do not satisfy the very strict statutory and regulatory requirements of unavoidable delay, and, by definition, are not intentional.[6]))

---

[3] See Changes to Patent Practice and Procedure, 62 Fed. Reg. at 53160 and 53178, 1203 Off. Gaz. Pat. Office at 88 and 103 (responses to comments 64 and 109)(applicant obligated under 37 C.F.R. §10.18 to inquire into the underlying facts and circumstances when providing the statement required by 37 C.F.R. §1.137(b) to the Patent and Trademark Office).

[4] See supplement of 17 June, 1999. The Patent and Trademark Office is relying on petitioner's duty of candor and good faith and accepting a statement made by Petitioner. See Changes to Patent Practice and Procedure, 62 Fed. Reg. at 53160 and 53178, 1203 Off. Gaz. Pat. Office at 88 and 103 (responses to comments 64 and 109)(applicant obligated under 37 C.F.R. §10.18 to inquire into the underlying facts and circumstances when providing statements to the Patent and Trademark Office).

[5] 35 U.S.C. §133 provides:

35 U.S.C. §133 Time for prosecuting application.
Upon failure of the applicant to prosecute the application within six months after any action therein, of which notice has been given or mailed to the applicant, or within such shorter time, not less than thirty days, as fixed by the Commissioner in such action, the application shall be regarded as abandoned by the parties thereto, unless it be shown to the satisfaction of the Commissioner that such delay was unavoidable.

[6] Therefore, by example, an unintentional delay in the reply might occur if the reply and transmittal form are to be prepared for shipment by the US Postal Service, but other pressing matters distract one's attention and the mail is not timely deposited for shipment.

As to Allegations of
Unintentional Delay

The requirements of a grantable petition pursuant to 37 C.F.R. §1.137(b) are the petition and fee therefor, a reply, a proper statement of unintentional delay under the regulation, and, where applicable, a terminal disclaimer and fee.

It appears that the requirements under the rule have been satisfied.

CONCLUSION

Accordingly, the petition pursuant to 37 C.F.R. §1.137(b) is **granted**.

The instant application is released to the Office of Patent Application Processing (OPAP) for further processing in due course.

Petitioner may find it beneficial to view Private PAIR within a fortnight of the instant decision to ensure that the revival has been acknowledged by the OPAP in response to this decision. It is noted that all inquiries with regard to status need be directed to the OPAP where that change of status must be effected—that does not occur in the Office of Petitions.

Telephone inquiries regarding this decision may be directed to the undersigned at (571) 272-3214—it is noted, however, that all practice before the Office is in writing (see: 37 C.F.R. §1.2[7]) and the proper authority for action on any matter in this regard are the statutes (35 U.S.C.), regulations (37 C.F.R.) and the commentary on policy (MPEP). Therefore, no telephone discussion may be controlling or considered authority for Petitioner's action(s).

/John J. Gillon, Jr./
John J. Gillon, Jr.
Senior Attorney
Office of Petitions

[7] The regulations at 37 C.F.R. §1.2 provide:
§1.2 Business to be transacted in writing.
All business with the Patent and Trademark Office should be transacted in writing. The personal attdance of applicants or their attorneys or agents at the Patent and Trademark Office is unnecessary. The action of the Patent and Trademark Office will be based exclusively on the written record in the Office. No attention will be paid to any alleged oral promise, stipulation, or understanding in relation to which there is disagreement or doubt.

UNITED STATES PATENT AND TRADEMARK OFFICE

Commissioner for Patents
United States Patent and Trademark Office
P.O. Box 1450
Alexandria, VA 22313-1450
www.uspto.gov

MAILED

SEP 13 2010

OFFICE OF PETITIONS

Muncy, Geissler, Olds & Lowe, PLLC
4000 Legato Road
Suite 310
FAIRFAX VA 22033

In re Application of	:	
Ming-Shun Yu	:	
Application No. 11/987,121	:	DECISION ON PETITION
Filed: November 27, 2007	:	
Attorney Docket No. 5545/0338PUS1	:	

This is a decision on the petition under the unintentional provisions of 37 CFR 1.137(b), filed August 25, 2010, to revive the above-identified application.

The petition is **GRANTED**.

The application became abandoned for failure to reply in a timely manner to the Notice to File Missing Parts of Nonprovisional Application (Notice), mailed January 16, 2008. The Notice set a period for reply of two (2) months from the mail date of the Notice. No extensions of time under the provisions of 37 CFR 1.136(a) were obtained. Accordingly, the application became abandoned on March 17, 2008. The Notice of Abandonment was mailed September 22, 2008.

The petition satisfies the requirements of 37 CFR 1.137(b) in that petitioner has supplied (1) the reply in the form of the $165 filing fee, the $270 search fee, the $110 examination fee and the $65 surcharge, (2) the petition fee of $810, and (3) a proper statement of unintentional delay.

The application file does not indicate a change of address has been filed in this case, although the address given on the petition differs from the address of record. A change of address should be filed in this case in accordance with MPEP 601.03. A courtesy copy of this decision is being mailed to the address noted on the petition. However, until otherwise instructed, all future correspondence regarding this application will be mailed solely to the address of record.

Telephone inquiries concerning this decision should be directed to Terri Johnson at (571) 272-2991.

This application is being referred to the Office of Patent Application Processing for appropriate action on the reply received.

/Terri Johnson/
Terri Johnson
Petitions Examiner
Office of Petitions

cc: **John McKinney Muncy**
PO Box 1364
Fairfax, VA 22038-1364

UNITED STATES PATENT AND TRADEMARK OFFICE

Commissioner for Patents
United States Patent and Trademark Office
P.O. Box 1450
Alexandria, VA 22313-1450
www.uspto.gov

BIRCH STEWART KOLASCH & BIRCH
PO BOX 747
FALLS CHURCH, VA 22040-0747

MAILED
JUN 06 2011
OFFICE OF PETITIONS

In re Application of	:	
Woon-Sig Hong	:	
Application No. 11/987,226	:	DECISION ON PETITION
Filed: November 28, 2007	:	
Attorney Docket No. 3884-0151PUS1	:	

This is a decision on the petition under the unintentional provisions of 37 CFR 1.137(b), filed April 11, 2011, to revive the above-identified application.

The petition is **GRANTED**.

The application became abandoned for failure to reply in a timely manner to the non-final Office action mailed July 29, 2010, which set a shortened statutory period for reply of three (3) months. No extensions of time under the provisions of 37 CFR 1.136(a) were obtained. Accordingly, the application became abandoned on October 30, 2010. A Notice of Abandonment was mailed February 16, 2011.

The petition satisfies the requirements of 37 CFR 1.137(b) in that petitioner has supplied (1) the reply in the form of an amendment, (2) the petition fee of $810, and (3) an adequate statement of unintentional delay.

Telephone inquiries concerning this decision should be directed to the undersigned at (571) 272-6059.

This application is being referred to Technology Center AU 2882 for appropriate action by the Examiner in the normal course of business on the reply received April 11, 2011.

A. Kelley-Collier

Alicia Kelley-Collier
Petitions Examiner
Office of Petitions

UNITED STATES PATENT AND TRADEMARK OFFICE

Commissioner for Patents
United States Patent and Trademark Office
P.O. Box 1450
Alexandria, VA 22313-1450
www.uspto.gov

KANESAKA BERNER AND PARTNERS LLP
1700 DIAGONAL RD
SUITE 310
ALEXANDRIA VA 22314-2848

MAILED

JAN 04 2012

OFFICE OF PETITIONS

In re Application of	:	
Kazuhiro Nakayama et al.	:	
Application No. 11/987,303	:	ON PETITION
Filed: November 29, 2007	:	
Attorney Docket No. IPA-021	:	

This is a decision regarding your request under 37 CFR 1.28. for acceptance of a fee deficiency submission filed December 15, 2011.

On September 1, 1998, the Court of Appeals for the Federal Circuit held that 37 CFR 1.28(c) is the sole provision governing the time for correction of the erroneous payment of the issue fee as a small entity. See DH Technology v. Synergystex International, Inc.. 154 F.33d 1333, 47 USPQ2d 1865 (Fed. Cir. Sept. 1, 1998).

The Office no longer investigates or rejects original or reissue applications under 37 CFR 1.56. 1098 Off. Gaz. Pat. Office 502 (January 3, 1989). Therefore nothing in this Notice is intended to imply that an investigation was done.

Your fee deficiency submission in the amount of $945, under 37 CFR 1.28, is hereby accepted and the petition is **GRANTED**.

The matter is being referred to Technology Center 1731.

Inquiries related to this communication should be directed to the Office of Petitions Staff at (571) 272-3282.

Patricia Faison-Ball

Patricia Faison-Ball
Senior Petitions Attorney
Office of Petitions

UNITED STATES PATENT AND TRADEMARK OFFICE

Commissioner for Patents
United States Patent and Trademark Office
P.O. Box 1450
Alexandria, VA 22313-1450
www.uspto.gov

KLEIN, O'NEILL & SINGH, LLP
18200 VON KARMAN AVENUE
SUITE 725
IRVINE CA 92612

MAILED

SEP 15 2011

OFFICE OF PETITIONS

In re Application of	:	
Richard Lee-Chee Kuo	:	
Application No. 11/987,332	:	NOTICE
Filed: November 29, 2007	:	
Attorney Docket No. **1291-066.102**	:	

This is a notice regarding your request filed August 29, 2011, for acceptance of a fee deficiency submission under 37 CFR 1.28.

The Office no longer investigates or rejects original or reissue applications under 37 CFR 1.56. **1098 Off. Gaz. Pat. Office 502 (January 3, 1989)**. Therefore, nothing in this Notice is intended to imply that an investigation was done.

Your fee deficiency submission under 37 CFR 1.28 is hereby **ACCEPTED**.

This application is no longer entitled to small entity status. Accordingly, all future fees paid in this application must be paid at the large entity rate.

Inquiries related to this communication should be directed to the undersigned at (571) 272-4584.

JoAnne Burke
Petitions Examiner
Office of Petitions

UNITED STATES PATENT AND TRADEMARK OFFICE

Commissioner for Patents
United States Patent and Trademark Office
P.O. Box 1450
Alexandria, VA 22313-1450
www.uspto.gov

KLEIN, O'NEILL & SINGH, LLP
18200 VON KARMAN AVENUE
SUITE 725
IRVINE CA 92612

MAILED
NOV 07 2011
OFFICE OF PETITIONS

In re Application of
Richard Lee-Chee Kuo
Application No. 11/987,332
Filed: November 29, 2007
Attorney Docket No. 1291-066.102

DECISION ON REQUEST FOR REFUND

This is a decision on the Request For Refund filed October 6, 2011.

The request is **DISMISSED**.

The request is dismissed because USPTO regulations require that papers filed in the application be signed by a registered attorney or agent, by the applicants (inventors) or by the assignee of the entire interest who has taken action in the application in accordance with 37 CFR 3.71. The request is signed by Jackie Chao. See 37 CFR 1.33(b), which states:

> (b) Amendments and other papers. Amendments and other papers, except for written assertions pursuant to § 1.27(c)(2)(ii) of this part, filed in the application must be signed by:
> (1) A registered patent attorney or patent agent of record appointed in compliance with § 1.32(b);
> (2) A registered patent attorney or patent agent not of record who acts in a representative capacity under the provisions of § 1.34;
> (3) An assignee as provided for under §3.71(b) of this chapter; or
> (4) All of the applicants (§ 1.41(b)) for patent, unless there is an assignee of the entire interest and such assignee has taken action in the application in accordance with § 3.71 of this chapter.

An unsigned amendment (or other paper) or one not properly signed by a person having authority to prosecute the application is not entered. This applies, for instance, where the amendment (or other paper) is signed by only one of two applicants and the one signing has not been given a power of attorney by the other applicant.

Any questions concerning this matter may be directed to the undersigned at (571) 272-3208.

/KOC/
Karen Creasy
Petitions Examiner
Office of Petitions

UNITED STATES PATENT AND TRADEMARK OFFICE

Commissioner for Patents
United States Patent and Trademark Office
P.O. Box 1450
Alexandria, VA 22313-1450
www.uspto.gov

MAILED
JAN 11 2012
OFFICE OF PETITIONS

KLEIN, O'NEILL & SINGH, LLP
18200 VON KARMAN AVENUE
SUITE 725
IRVINE CA 92612

In re Application of	:	
Richard Lee-Chee Kuo	:	
Application No. 11/987,332	:	DECISION ON REQUEST FOR REFUND
Filed: November 29, 2007	:	
Attorney Docket No. 1291-066.102	:	

This is a decision on the Request For Refund filed December 21, 2011.

The request is **DISMISSED**.

Applicant files the above request for refund of $575.00 that was charged to applicant's deposit account (11-1159). Applicant asserts that the $575.00 was also charged to applicant's credit card account.

A review of Office finance records show that the $575.00 payment was only charged to applicant's deposit account and **not** to applicant's credit card account.

In view of the above, the request for refund is dismissed.

Any questions concerning this matter may be directed to the undersigned at (571) 272-3208.

/KOC/
Karen Creasy
Petitions Examiner
Office of Petitions

UNITED STATES PATENT AND TRADEMARK OFFICE

Commissioner for Patents
United States Patent and Trademark Office
P.O. Box 1450
Alexandria, VA 22313-1450
www.uspto.gov

Muncy, Geissler, Olds & Lowe, PLLC
4000 Legato Road
Suite 310
FAIRFAX VA 22033

MAILED
MAY 17 2011
OFFICE OF PETITIONS

In re Application of
Chen
Application No. 11/987,403
Filed: November 29, 2007
Atty. Dkt. No.: 5545/0412PUS1

: DECISION ON PETITION

This decision is in response to the petition under 37 CFR 1.137(b), filed February 24, 2011.

The petition is **DISMISSED**.

Any request for reconsideration of this decision must be submitted within **TWO (2) MONTHS** from mail date of this decision. Extensions of time under 37 CFR 1.136(a) are permitted. The reconsideration request should include a cover letter entitled "Renewed Petition under 37 CFR 1.137(b)." This is not a final agency decision.

This application became abandoned February 22, 2008 for failure to timely reply to the Notice to File Missing Parts (Notice) mailed December 21, 2007. The Notice set a two month shortened statutory period of time for reply. No extensions of time in accordance with 37 CFR 1.136(a) were timely requested. Notice of Abandonment was mailed September 3, 2008.

A grantable petition pursuant to 37 C.F.R. § 1.137(b) must be accompanied by: (1) the required reply to the outstanding Office action or notice, unless previously filed; (2) the petition fee as set forth in 37 C.F.R. § 1.17(m); (3) a statement that the entire delay in filing the required reply from the due date for the reply until the filing of a grantable petition pursuant to 37 C.F.R. § 1.137(b) was unintentional; and (4) any terminal disclaimer (and fee set forth in 37 C.F.R. § 1.20(d)) required pursuant to 37 C.F.R. § 1.137(c).

The instant petition fails to satisfy requirement (3).

As to item (3), there are three periods to be considered during the evaluation of a petition under 37 CFR 1.137(b):

(1) the delay in reply that originally resulted in the abandonment;

(2) the delay in filing an initial petition pursuant to 37 CFR 1.137(b) to revive the application; and

(3) the delay in filing a grantable petition pursuant to 37 CFR 1.137(b) to revive the application.

Currently, the delay has not been shown to the satisfaction of the Director to be unintentional for periods (1) and (3).

A petition under 37 CFR 1.137(b) must be accompanied by a statement that the delay was unintentional. Further, the Director may require additional information where there is a question whether the entire delay in question was unintentional." Where, as here, there is a question whether the delay in filing a grantable petition was unintentional, the petitioner must meet the burden of establishing that the delay was unintentional within the meaning of 35 U.S.C. § 41(a)(7) and 37 CFR 1.137(b). *See* In re Application of G, 11 USPQ2d 1378, 1380 (Comm'r Pats. 1989); 37 CFR 1.137(b). In view of the inordinate delay (more than three years) in resuming prosecution, there is a question whether the entire delay was unintentional.

Any renewed petition must establish that the entire delay, from the time that a reply was due until the filing of a grantable petition, was unintentional. Petitioners may wish to identify the party having the right to reply to avoid abandonment who in turn may explain what effort(s) was made to further reply to the Office action, and, further, why no reply was filed. If no effort was made to further reply, then that party can explain why the delay in this application does not result from a deliberate course of action (or inaction). Likewise, if practitioner was counsel of record at the time of abandonment, practitioner should explain why this application became abandoned and what efforts were made to timely pursue the petition for revive.

Petitioner may wish to submit supporting documentation to establish that the delay in seeking to resume prosecution has been unintentional as well as statements of fact from those having first hand knowledge of the facts and circumstances surrounding the delay at issue. As the courts have made clear, it is pointless for the USPTO to revive a long abandoned application without an adequate showing that the delay did not result from a deliberate course of action. See, Lawman Armor v. Simon, 2005 U.S. Dist. LEXIS 10843, 74 USPQ2d 1633 (DC EMich 2005); Field Hybrids, LLC v. Toyota Motor Corp., 2005 U.S. Dist. LEXIS 1159 (D. Minn Jan. 27, 2005); Lumenyte Int'l Corp. v. Cable Lite Corp., Nos. 96-1011, 96-1077, 1996 U.S. App. LEXIS 16400, 1996 WL 383927 (Fed. Cir. July 9, 1996) (unpublished) (patents held unenforceable due to a finding of inequitable conduct in submitting an inappropriate statement that the abandonment was unintentional).

In view thereof, the petition is **DISMISSED**.

Any request for reconsideration of this decision must be submitted within TWO (2) MONTHS from the mail date of this decision. Extensions of time under 37 CFR 1.136(a) are permitted. The reconsideration request should include a cover letter entitled "Renewed Petition under 37CFR 1.137(b)." This is **not** a final agency action within the meaning of 5 U.S.C. § 704.

Further correspondence with respect to this matter should be addressed as follows:

By Mail: Mail Stop PETITION
Commissioner for Patents
P. O. Box 1450

Alexandria, VA 22313-1450

By hand: U. S. Patent and Trademark Office
Customer Service Window, Mail Stop Petitions
Randolph Building
401 Dulany Street
Alexandria, VA 22314

The centralized facsimile number is **(571) 273-8300.**

Telephone inquiries concerning this decision should be directed to the undersigned at (571) 272-3205.

/ALESIA M. BROWN/

Alesia M. Brown
Attorney Advisor
Office of Petitions

UNITED STATES PATENT AND TRADEMARK OFFICE

Commissioner for Patents
United States Patent and Trademark Office
P.O. Box 1450
Alexandria, VA 22313-1450
www.uspto.gov

MAILED
JUL 28 2011
OFFICE OF PETITIONS

Muncy, Geissler, Olds & Lowe, PLLC
4000 Legato Road
Suite 310
FAIRFAX VA 22033

In re Application of	:
Chen	: DECISION ON PETITION
Application No. 11/987,403	:
Filed: November 29, 2007	:
Atty. Dkt. No.: 5545/0412PUS1	:

This decision is in response to the renewed petition under 37 CFR 1.137(b), filed July 18, 2011.

The petition is **GRANTED**.

This application became abandoned February 22, 2008 for failure to timely reply to the Notice to File Missing Parts (Notice) mailed December 21, 2007. The Notice set a two month shortened statutory period of time for reply. No extensions of time in accordance with 37 CFR 1.136(a) were timely requested. Notice of Abandonment was mailed September 3, 2008. A petition under 37 CFR 1.137(b) was filed February 24, 2011 and dismissed May 17, 2011.

A grantable petition pursuant to 37 C.F.R. § 1.137(b) must be accompanied by: (1) the required reply to the outstanding Office action or notice, unless previously filed; (2) the petition fee as set forth in 37 C.F.R. § 1.17(m); (3) a statement that the entire delay in filing the required reply from the due date for the reply until the filing of a grantable petition pursuant to 37 C.F.R. § 1.137(b) was unintentional; and (4) any terminal disclaimer (and fee set forth in 37 C.F.R. § 1.20(d)) required pursuant to 37 C.F.R. § 1.137(c).

The instant petition has been carefully reviewed and found in compliance with the provisions set forth above.

The instant application is being forwarded to the Office of Patent Application Processing for further processing.

Telephone inquiries concerning this decision should be directed to the undersigned at (571) 272-3205.

/ALESIA M. BROWN/

Alesia M. Brown
Attorney Advisor
Office of Petitions

UNITED STATES PATENT AND TRADEMARK OFFICE

Commissioner for Patents
United States Patent and Trademark Office
P.O. Box 1450
Alexandria, VA 22313-1450
www.uspto.gov

ROSENBERG, KLEIN & LEE
3458 ELLICOTT CENTER DRIVE-SUITE 101
ELLICOTT CITY MD 21043

MAILED

SEP 08 2010

OFFICE OF PETITIONS

In re Application of :
Shigetada Taya :
Application No. 11/987,405 : DECISION ON REQUEST FOR REFUND
Filed: November 29, 2007 :
Attorney Docket No. MR1683-930 :

This is a decision on the Request For Refund filed August 19, 2010.

The request is **GRANTED**.

As authorized, the $400.00 petition fee charged on May 10, 2010, has been credited to petitioner's deposit account.

Any questions concerning this matter may be directed to the undersigned at (571) 272-3208.

/KOC/
Karen Creasy
Petitions Examiner
Office of Petitions

UNITED STATES PATENT AND TRADEMARK OFFICE

Commissioner for Patents
United States Patent and Trademark Office
P.O. Box 1450
Alexandria, VA 22313-1450
www.uspto.gov

ROSENBERG, KLEIN & LEE
3458 ELLICOTT CENTER DRIVE, SUITE 101
ELLICOTT CITY MD 21043

MAILED

AUG 16 2010

OFFICE OF PETITIONS

In re Application of :
Shigetada TAYA :
Application No. 11/987,406 :
Filed: November 29, 2007 :
Attorney Docket No. MR1683-932 :

ON PETITION

This is a decision on the petition, filed May 10, 2010, which is requesting that the requirement be waived or suspended pursuant to 37 CFR 1.183.

The petition is **DISMISSED.**

The application became abandoned for failure to reply in a timely manner to the Notice to File Missing Parts of Nonprovisional Application (Notice), mailed December 21, 2007. The Notice set a period for reply of **two (2) months** from the mail date of the Notice. No extensions of time under the provisions of 37 CFR 1.136(a) were obtained. Accordingly, the application became abandoned on February 22, 2008. A Notice of Abandonment was mailed September 3, 2008.

The petition in the above-identified application was not accompanied by payment of the required fee. No consideration on the merits can be given that petition until the required fee is received.

Telephone inquiries regarding this communication should be directed to Diane Goodwyn at (571) 272-6735.

Thurman K. Page
Petitions Examiner
Office of Petitions

UNITED STATES PATENT AND TRADEMARK OFFICE

Commissioner for Patents
United States Patent and Trademark Office
P.O. Box 1450
Alexandria, VA 22313-1450
www.uspto.gov

DOWELL & DOWELL P.C.
103 Oronoco St.
Suite 220
Alexandria VA 22314

MAILED
NOV 15 2010
OFFICE OF PETITIONS

In re Application of :
Schneider et al. :
Application No. 11/987,414 : DECISION ON PETITION
Filed: November 29, 2007 :
Attorney Docket No.: 16196 :

This is a decision on the petition filed under 37 CFR 1.137(b) in the above-identified application filed on September 20, 2010.

The petition is **GRANTED.**

This application became abandoned for failure to timely submit a reply to the non-final Office action mailed on March 20, 2009. The Notice set an extendable three-month reply period of June 20, 2009. Accordingly, this application became abandoned on June 21, 2009. A Notice of Abandonment was mailed on October 1, 2009.

The petition satisfies the requirements of 37 CFR 1.137(b) in that petitioner has supplied (1) the reply in the form of an amendment and specification (2) the petition fee of $810.00, and (3) a statement of unintentional delay.

Telephone inquiries concerning this decision should be directed to the undersigned at (571) 272-3215.

This application is being referred to Technology Center AU 1792 for appropriate action by the Examiner in the normal course of business on the reply received

Charlema Grant
Petitions Attorney
Office of Petitions

UNITED STATES PATENT AND TRADEMARK OFFICE

Commissioner for Patents
United States Patent and Trademark Office
P.O. Box 1450
Alexandria, VA 22313-1450
www.uspto.gov

MAILED

JUL 29 2011

PCT LEGAL ADMINISTRATION

22428
FOLEY AND LARDNER LLP
Suite 500
3000 K Street NW
Washington DC 20007

In re Application of
ZHANG *et al*
Application No.: 11/987,415
Filing Date: November 29, 2007
Attorney Docket No.: 048236-0105
For: HEPATIC DISEASE-EVALUATING APPARATUS, HEPATIC DISEASE-EVALUATING METHOD, HEPATIC DISEASE-EVALUATING SYSTEM, HEPATIC DISEASE-EVALUATING PROGRAM AND RECORDING MEDIUM

DECISION

This is a decision on the "Petition for Unintentionally Delayed Domestic Priority Claim Under 37 CFR §1.78(a)(3)" filed March 21, 2011 to accept unintentionally delayed claims under 35 U.S.C. §§120, 365(c) and 119(a)-(d) for benefit of the prior-filed applications set forth in the concurrently filed amendment to the specification and supplemental Application Data Sheet (ADS).

The petition to claim priority to U.S. Application No. 11/148,352 and PCT/JP2003/015713 is treated under 37 CFR 1.78(a)(3). The claim of priority to Japanese Application No. 2002-357042 filed December 9, 2002, and Japanese Application No. 2003-205589 filed August 1, 2003 is treated under 37 CFR 1.55(c)

The petition under 37 CFR 1.78(a)(3) is **GRANTED** as follows:

A petition for acceptance of a claim for late priority under 37 CFR 1.78(a)(3) is only applicable to those applications filed on or after November 29, 2000. Further, the petition is appropriate only after the expiration of the period specified in 37 CFR 1.78(a)(2)(ii). The petition under 37 CFR 1.78(a)(3) must be accompanied by:

(1) the reference required by 35 U.S.C. § 120 and 37 CFR 1.78(a)(2)(i) of the prior-filed application, unless previously submitted;
(2) the surcharge set forth in § 1.17(t); and
(3) a statement that the entire delay between the date the claim was due under 37 CFR 1.78(a)(2)(ii) and the date the claim was filed was unintentional. The Director may require

additional information where there is a question whether the delay was unintentional.

The petition complies with the requirements for a grantable petition under 37 CFR 1.78(a)(3) in that (1) a reference to the prior-filed nonprovisional and international applications has been included in an amendment to the first sentence of the specification following the title, as provided by 37 CFR 1.78(a)(2)(iii); (2) the surcharge fee required by 37 CFR 1.17(t) has been submitted; and (3) the petition contains a proper statement of unintentional delay. Accordingly, having found that the instant petition for acceptance of an unintentionally delayed claim for the benefit of priority under 35 U.S.C. § 120 to the prior-filed applications satisfies the conditions of 37 CFR 1.78(a)(3), the petition is granted.

A corrected Filing Receipt, which includes the priority claim to the prior-filed nonprovisional and international application accompanies this decision.

However, the petition under 37 CFR 1.55(c) is **DISMISSED** for the following reason:

A petition under 37 CFR 1.55(c) to accept an unintentionally delayed claim for priority requires:

(1) The nonprovisional application claiming the benefit of an earlier filing date must be filed on or after November 29, 2000;
(2) the claim submitted with the petition must identify the prior foreign application for which priority is claimed, as well as any foreign application for the same subject matter and having a filing date before that of the application for which priority is claimed, by the application number, country, and the filing date and be included either in an oath or declaration (37 CFR 1.63(c)(2)) or in an Application Data Sheet (37 CFR 1.76(b)(6);
(3) the surcharge as set forth in 37 CFR 1.17(t);
(4) a statement that the entire delay between the date the claim was due under 37 CFR 1.55(a)(1) and the date the claim was filed was unintentional. (The Director may require additional information where there is a question whether the delay was unintentional.); and
(5) the above-identified nonprovisional application must be filed within 12 months of the filing date of the foreign application.

The instant petition fails to comply with item (2) above. Applicants included a supplemental ADS with the subject petition. However, the ADS does not bear a signature as required in accordance with 37 CFR 1.33. Further, the priority information was not included in an oath or declaration.

Applicants should use the most recent version of the ADS which includes a signature block. It can be obtained at: http://www.uspto.gov/ebc/portal/efs/sb0014_fill.pdf.

In view of the above, compliance with 37 CFR 1.63(c)(2) or 37 CFR 1.76(b)(6) must be satisfied if applicants desires to claim priority to the foreign applications noted in the petition. Any future petition should include a cover letter and be entitled "Renewed Petition under 37 CFR 1.55(c)."

Any further correspondence with respect to this matter may be filed electronically via the USPTO EFS-Web, by facsimile to the Office of PCT Legal Administration at (571) 273-04559, or if mailed addressed to Mail Stop PCT, Commissioner for Patents, Office of PCT Legal Administration, P.O. Box 1450, Alexandria, Virginia 22313-1450, with the contents of the letter marked to the attention of the Office of PCT Legal Administration.

Any questions concerning this matter may be directed to James Thomson at (571) 272-3302.

Boris Milef
Legal Examiner
Office of PCT Legal Administration

UNITED STATES PATENT AND TRADEMARK OFFICE

Commissioner for Patents
United States Patent and Trademark Office
P.O. Box 1450
Alexandria, VA 22313-1450
www.uspto.gov

22428
FOLEY AND LARDNER LLP
Suite 500
3000 K Street NW
Washington DC 20007

MAILED

AUG 10 2011

PCT LEGAL ADMINISTRATION

In re Application of
ZHANG *et al*
Application No.: 11/987,415
Filing Date: November 29, 2007
Attorney Docket No.: 048236-0105
For: HEPATIC DISEASE-EVALUATING APPARATUS, HEPATIC DISEASE-EVALUATING METHOD, HEPATIC DISEASE-EVALUATING SYSTEM, HEPATIC DISEASE-EVALUATING PROGRAM AND RECORDING MEDIUM

DECISION

This is a decision on the "Renewed Petition Under 37 CFR 1.55(c)" filed August 4, 2011 for acceptance of an unintentionally delayed claim under 35 U.S.C. § 119(a)-(d) for benefit of the filing date of Japanese Application No. 2002-357042 filed December 9, 2002, and Japanese Application No. 2003-205589 filed August 1, 2003.

The renewed petition is **GRANTED**.

The present application was filed after November 29, 2000, and did not include a reference to the foreign application, for which benefit is now sought, within the later of four months from the actual filing date of the application or sixteen months from the filing date of the prior foreign application. Therefore, since the claim for priority is submitted after the period specified in 37 CFR 1.55(a)(1)(i), this is an appropriate petition under the provisions of 37 CFR 1.55(c).

A petition under 37 CFR 1.55(c) to accept an unintentionally delayed claim for priority requires:

(1) The nonprovisional application claiming the benefit of an earlier filing date must be filed on or after November 29, 2000;

(2) the claim submitted with the petition must identify the prior foreign application for which priority is claimed, as well as any foreign application for the same subject matter and having a filing date before that of the application for which priority is claimed, by the application number, country, and the filing date and be included

either in an oath or declaration (37 CFR 1.63(c)(2)) or in an Application Data Sheet (ADS)(37 CFR 1.76(b)(6);

(3) the surcharge as set forth in 37 CFR 1.17(t);

(4) a statement that the entire delay between the date the claim was due under 37 CFR 1.55(a)(1) and the date the claim was filed was unintentional. (The Commissioner may require additional information where there is a question whether the delay was unintentional); and

(5) the above-identified nonprovisional application must be filed within 12 months of the filing date of the foreign application.

Applicants failed to comply with item (2) in the initial petition as the ADS submitted was not signed as required by 37 CFR 1.33. In the renewed petition, applicants provided a signed ADS listing the proper foreign priority claims. All requirements being met, the petition under 37 CFR 1.55(c) to accept an unintentionally delayed claim for priority under 35 U.S.C. § 119(a)-(d) is **granted**.

A Corrected Filing Receipt which reflects the above-noted foreign applications accompanies this decision on petition.

This matter is being referred to Technology Center AU 1631 for examination in due course and for consideration by the examiner of record of the foreign priority claim under 35 U.S.C. § 119(a)-(d).

Any questions concerning this matter may be directed to James Thomson at (571) 272-3302.

Boris Milef
Legal Examiner
Office of PCT Legal Administration

UNITED STATES PATENT AND TRADEMARK OFFICE

Commissioner for Patents
United States Patent and Trademark Office
P.O. Box 1450
Alexandria, VA 22313-1450
www.uspto.gov

March 16, 2011

John C. Garvey
Staas & Halsey LLP
1201 New York Avenue
7th Floor
Washington, DC 20005

Patent No: 7,853,145 B2
Application No: 11/987,582
Applicant: Fumio Futami, et al.
Issued: December 14, 2010
Title: **OPTICAL SWITCH AND OPTICAL WAVEFORM MONITORING APPARATUS**

Request for Certificate Of Correction:

Consideration has been given to your request for the issuance of a certificate of correction for the above- identified patent under the provisions of Rule 1.322.

Inspection of the application for the patent reveals that column 11, lines 50-51 in the patent, are printed in accordance with the record in the Patent and Trademark Office, as passed to issue by the examiner. There being no fault on the part of the Patent and Trademark Office, it has no authority to issue a certificate of correction under the provision of 1.322.

In view of the foregoing your request for certificate of correction is hereby **denied**.

However, further consideration will be given to this matter, upon receipt of a request for certificate of correction under the provision 1.323, accompanied by the appropriate fee which is presently $100.

/Virginia Tolbert/
Virginia Tolbert
For Mary Diggs, Supervisor
Decisions and Certificate of Correction
(571) 272-0460 (voice)
(571) 270-9892 (fax)

vt

UNITED STATES PATENT AND TRADEMARK OFFICE

Commissioner for Patents
United States Patent and Trademark Office
P.O. Box 1450
Alexandria, VA 22313-1450
www.uspto.gov

MAILED
MAR 16 2012
OFFICE OF PETITIONS

Slater & Matsil, L.L.P.
17950 Preston Rd
Suite 1000
Dallass TX 75252

In re Application of

Craig :

Application No. 11/987,626

: DECISION ON PETITION

Filed: December 3, 2007

:

Attorney Docket No. **LMC-MC-03095**

This is a decision on the petition under 37 CFR 1.137(b), filed February 21, 2012, to revive the above-identified application.

The petition is **GRANTED**.

The above-cited application became abandoned for failure to reply in a timely manner to the non-final Office action mailed May 11, 2011, which set a shortened statutory period for reply of three (3) months from its mailing date. No extension of time pursuant to 37 CFR 1.136(a) was obtained within the allowable period. Accordingly, the application became abandoned on August 12, 2011. A Notice of Abandonment was mailed December 27, 2012.

The amendment filed February 21, 2012, is noted.

The application is being forwarded to Technology Center 3600, GAU 3661 for further processing.

Telephone inquiries concerning this decision should be directed to the undersigned at (571) 272-3222.

/Kenya A. McLaughlin/

Kenya A. McLaughlin
Petitions Attorney
Office of Petitions

UNITED STATES PATENT AND TRADEMARK OFFICE

Commissioner for Patents
United States Patent and Trademark Office
P.O. Box 1450
Alexandria, VA 22313-1450
www.uspto.gov

Date : March 29, 2011

Patent No. :7881056
Ser. No. :11/987634
Inventor(s) :Tetsuo SANO
Issued : February 1, 2011
Title :HEAT RADIATION STRUCTURE FOR AN ELECTRONIC DEVICE

Re: Request for Certificate of Correction

Consideration has been given your request for the issuance of a certificate of correction for the above-identified patent under the provisions of Rule(s) 1.322 and/or 1.323.

Assignees' names and addresses (assignment data) printed in a patent, are based *solely* on information supplied in the appropriate space for identifying the assignment data, i.e., item 3 of the Issue Fee Transmittal Form PTOL-85B. Granting of a request under 37 CFR 3.81(b) is required to correct applicant's error providing ***incorrect or erroneous*** assignment data, *before* issuance of a Certificate of Correction, under 37 CFR 1.323 *(see Manual of Patent Examining Procedures (M.P.E.P) Chp.1400, sect. 1481)*. This procedure is required *at any time after the issue fee is paid*, including after issuance of the patent.

In view of the foregoing, your request, in this matter, is hereby denied.

A request to correct the Assignee under 37 CFR 3.81(b) should include:

A. **the processing fee set forth in 37 CFR 1. 17(i) (currently $130);**
B. a statement that the failure to include the correct assignee name on the PTOL-85B was inadvertent; and
C. a copy of the Notice of Recordation of Assignment Document, reflecting the reel and frame number where the assignment(s) is recorded and/or reflecting proof of *the date* the assignment was submitted for recordation.

In the Request, Applicant(s) may request that the file be forwarded to Certificates of Correction Branch, for issuance of a Certificate of Correction, if the Request is granted.

Any request under 37 CFR 3.81(b) should be directed to the following address or facsimile number:

By mail: Mail Stop PETITIONS

Commissioner for Patents
Post Office Box 1450
Alexandria, VA 22313-1450

By hand: Customer Service Window
Mail Stop Petitions
Randolph Building
401 Dulany Street
Alexandria, VA 22314

By fax: (703) 872-9306
ATTN: Office of Petitions

Electronic Filing uspto.gov/ebc/index.html
(must be registered as an e-filer to submit responses)
Support 1-866-217-9197 571-272-4100

If a fee (currently $100) was previously submitted for consideration of a Request for Certificate of Correction, under CFR 1.323, to correct assignment data, no additional fee is required. Any inquiry concerning this communication should be directed to Ms. A. Green 571.272.9005.

For Mary Diggs
Decisions & Certificates
of Correction Branch
(703) 756-1580 or (751) 272- 9005

James A. Oliff
Oliff & Berridge PLC
P. O. Box 320850
Alexandria, VA 22320-4850

/arg

UNITED STATES PATENT AND TRADEMARK OFFICE

Commissioner for Patents
United States Patent and Trademark Office
Washington, D.C. 20231
www.uspto.gov

OLIFF & BERRIDGE, PLC
P.O. BOX 320850
ALEXANDRIA VA 22320-4850

MAILED
JAN 09 2012
OFFICE OF PETITIONS

In re Patent No. 7,881,056
Issue Date: 1 February, 2011
Application No. 11/987,634
Filed: 3 December, 2007
Attorney Docket No. 134862

ON PETITION

This is a decision on the petition filed 7 April, 2011, to waive the rules pursuant to 37 C.F.R. §1.183 and accept the correction of the assignee on the front page of the above-identified patent pursuant to 37 C.F.R. §1.323 and §3.81(a).

NOTE:

It appears that Petitioner failed to set forth the application number on deposit of the instant petition. Petitioner is reminded that the application number and filing date (along with the patent number and issue date) are to be set forth on papers submitted on any patented matter.

It appears that the instant petition was not directed to the Office of Petitions for consideration and determination when the petition was submitted.

As a result, the petition was received in the Office of Petitions only at this writing.

Petitioner might find it beneficial to inquire should a petition not be decided within 90-120 days, since almost all petitions are addressed by the Office of Petitions well within that time frame.

It appears that, while Petitioner authorized any additional fees due herein, Petitioner failed to submit a payment/fee form itemizing fees that Petitioner found to be due herein pursuant to the rules provisions invoked. The Office would appreciate Petitioner's attentions to these matters in the future. The fees are charged as authorized.

Patent No. 7,881,056
Application No. 11/987,634

The petition is **GRANTED**.

Petitioner requests issuance of a certificate of correction substituting the name of "Fujitsu Ten Limited."

The regulations at 37 C.F.R. §3.81(a) permits the patent to issue to the assignee, provided that, at the time the issue fee is paid, the name of an assignee is provided. (See: the regulations The regulations at 37 C.F.R. §3.81(b) and the guidance in the Commentary at MPEP §307.)

Petitioner appears to have submitted documents supporting/evidencing the assignment in question at Reel/Frame 020221/0299 on 3 December, 2007. That assignment indicates the assignee to be identified therein as of **Fujitsu Ten Limited**.

Thereafter the patent issued on 1 February, 2011, as indicated above. (*See*, generally in this regard: MPEP §307.)

Petitioner requests that a certificate of correction be issued to reflect the correct assignee on the front page of the Letters Patent in the patent to be issued from the application. The request was accompanied by a certificate of correction (and fee) as required by 3.81(b). Further, Office assignment records reflect assignment as set forth above.

Out of an abundance of caution, Petitioners always are reminded that those registered to practice and all others who make representations before the Office are reminded to inquire into the underlying facts of representations made to the Office and support averments with the appropriate documentation–since all owe to the Office the continuing duty to disclose.[1]

The availability of applications and application papers online to applicants/practitioners who diligently associate their Customer Number with the respective application(s) now provides an applicant/practitioner on-demand information as to events/transactions in an application.

Accordingly, because the request complies with the provisions of 37 C.F.R. 3.81(b), it is appropriate for a certificate of correction to be processed.

This matter is being referred to the Certificates of Correction Branch for processing of a certificate of correction.

---

[1] See supplement of 17 June, 1999. The Patent and Trademark Office is relying on Petitioner's duty of candor and good faith and accepting a statement made by Petitioner. See Changes to Patent Practice and Procedure, 62 Fed. Reg. at 53160 and 53178, 1203 Off. Gaz. Pat. Office at 88 and 103 (responses to comments 64 and 109)(applicant obligated under 37 C.F.R. §10.18 to inquire into the underlying facts and circumstances when providing statements to the Patent and Trademark Office).

Patent No. 7,881,056
Application No. 11/987,634

Telephone inquiries regarding this decision may be directed to the undersigned at (571) 272-3214—it is noted, however, that all practice before the Office is in writing (see: 37 C.F.R. §1.2[2]) and the proper authority for action on any matter in this regard are the statutes (35 U.S.C.), regulations (37 C.F.R.) and the commentary on policy (MPEP). Therefore, no telephone discussion may be controlling or considered authority for Petitioner's action(s).

Any questions concerning the issuance of a certificate of correction should be directed to the Certificates of Correction Branch at (571) 272-4200.

/John J. Gillon, Jr./
John J. Gillon, Jr.
Senior Attorney
Office of Petitions

[2] The regulations at 37 C.F.R. §1.2 provide:
§1.2 Business to be transacted in writing.
All business with the Patent and Trademark Office should be transacted in writing. The personal attendance of applicants or their attorneys or agents at the Patent and Trademark Office is unnecessary. The action of the Patent and Trademark Office will be based exclusively on the written record in the Office. No attention will be paid to any alleged oral promise, stipulation, or understanding in relation to which there is disagreement or doubt.